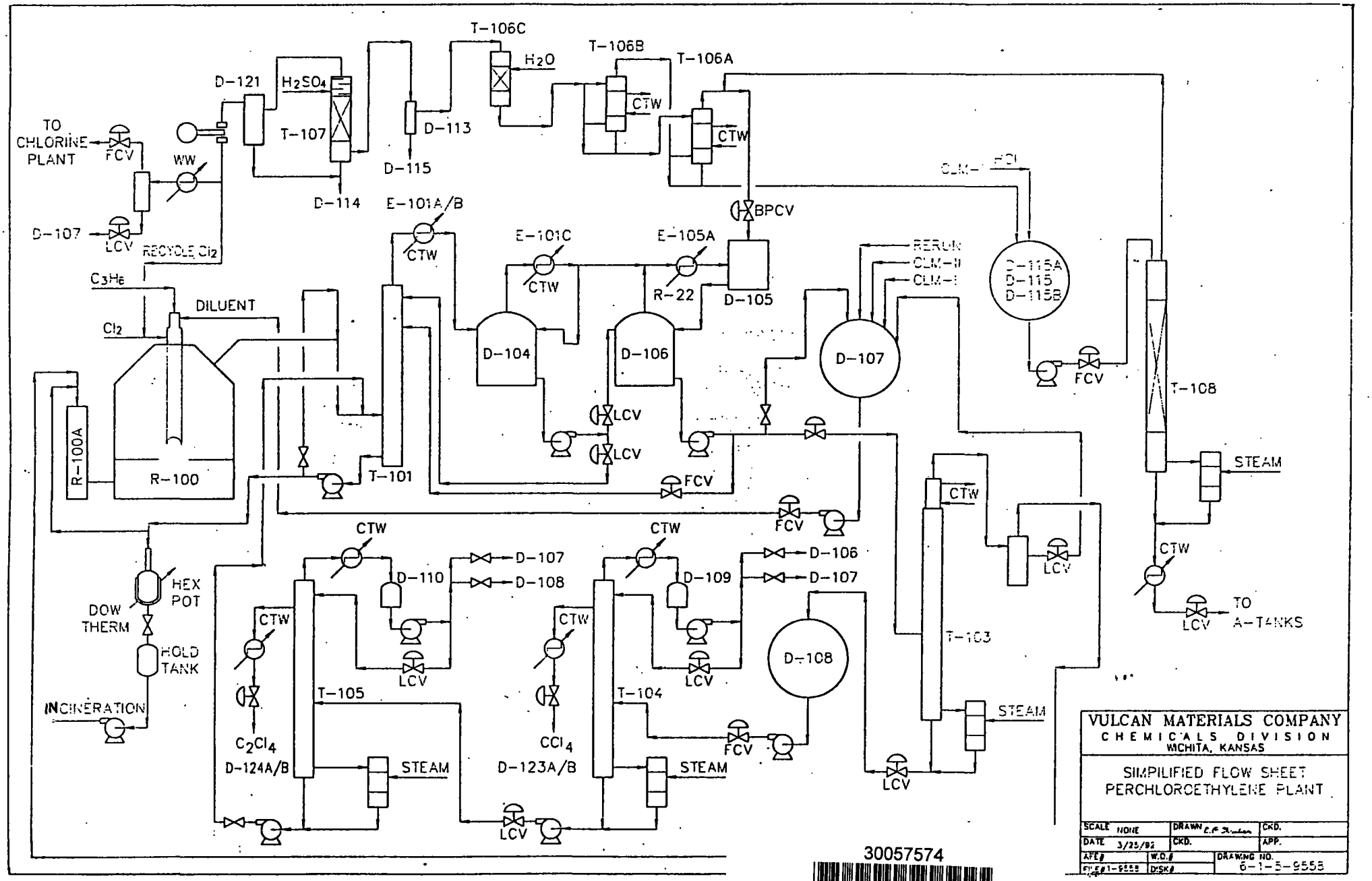

30057574

Superfund

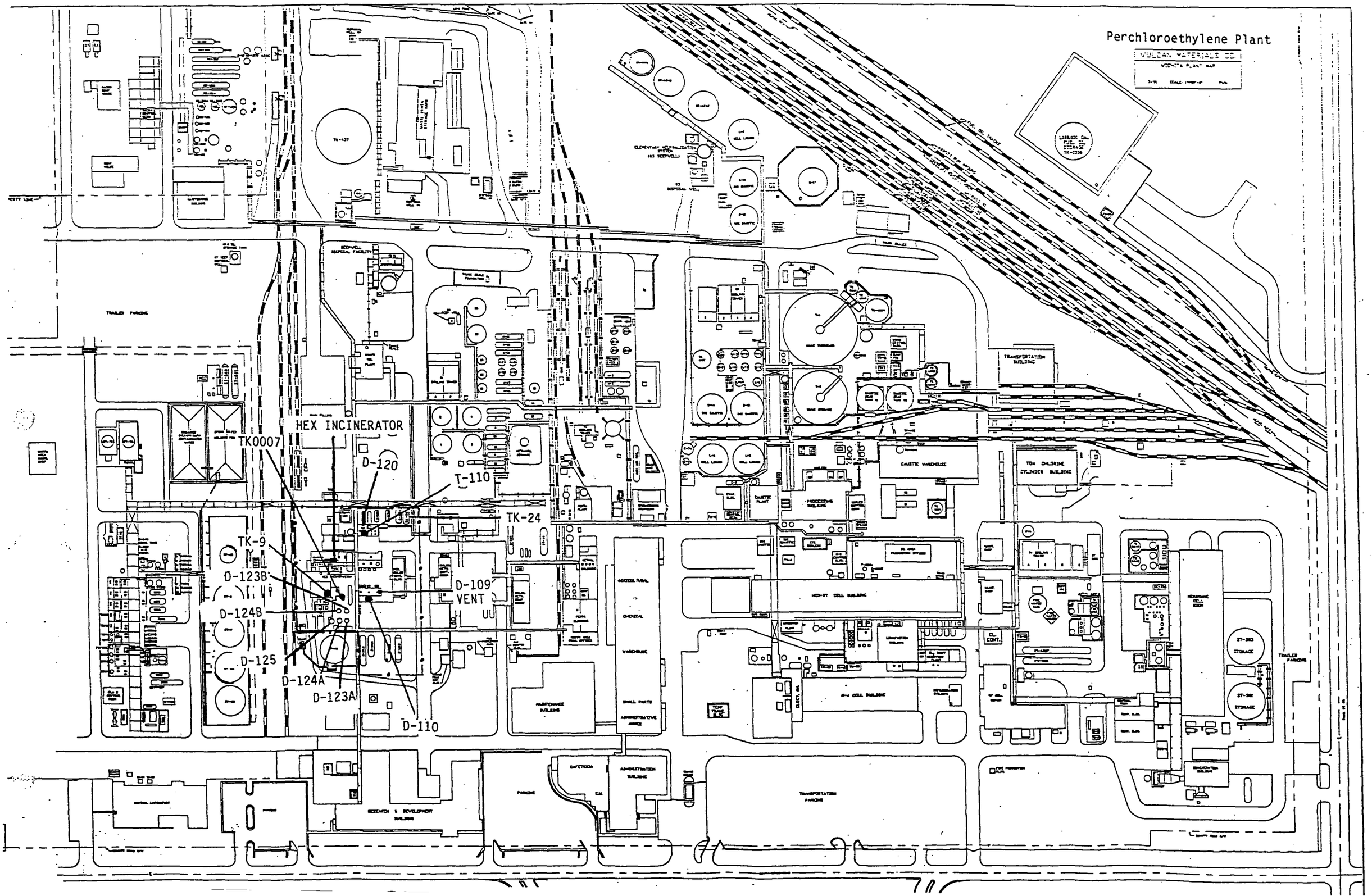
Perchloroethylene Plant
HEX INCINERATOR
TK0007
D-120
T-110
TK-24
TK-9
D-123B
D-109
VENT
D-124B
D-125
D-124A
D-123A
D-110