© Siemens AG 2012

Battery-operated water meter MAG 8000

Overview

MAG 8000 is a comprehensive meter which intelligent information and high performance measurement as well as the easy to install concept take cost of ownership and customer service to a new level for water meter.

Benefits

Easy to install

- Compact or remote solution with factory mounted cable and customer setting from factory
- IP68/NEMA 6P enclosure. Sensor can be buried
- Flexible power supply - internal or external battery pack or mains power supply with battery back-up possibilities
- Superior measurement
- Down to 0.2 % maximum uncertainty
- OIML R 49 type approval
- PTB K7.2
- FM Fire Service Approval
- Bi-directional measurement

Long lasting performance/Low cost of Ownership

- Verification according to Directive 2004/22/EC of the European Parliament and Council of March 31, 2004 on measuring instruments (MID), Annex MI-001
- No moving parts means less wear and tear
- Up to 6 to 10 years maintenance-free operation in typical revenue application
- Robust construction build for the application

Intelligent information, easy to access

- Advanced information on site
- Data logger
- Advanced statistics and diagnostics
- Add-on communication modules

Application

The following MAG 8000 versions are available as stand-alone water meters:

- MAG 8000 (7ME6810) for abstraction and distribution network
- MAG 8000 CT (7ME6820) for revenue and bulk metering
- MAG 8000 (7ME6880) for irrigation

Design

MAG 8000 is designed to minimize power consumption.
The product program consists of

- Basic and advanced version
- Sensor sizes from DN 25 to 1200 (1" to 48")
- Compact and remote installation in IP68/NEMA 6P enclosure and factory-mounted cable
- SIMATIC PDM and Flow Tool PC configuration softwares

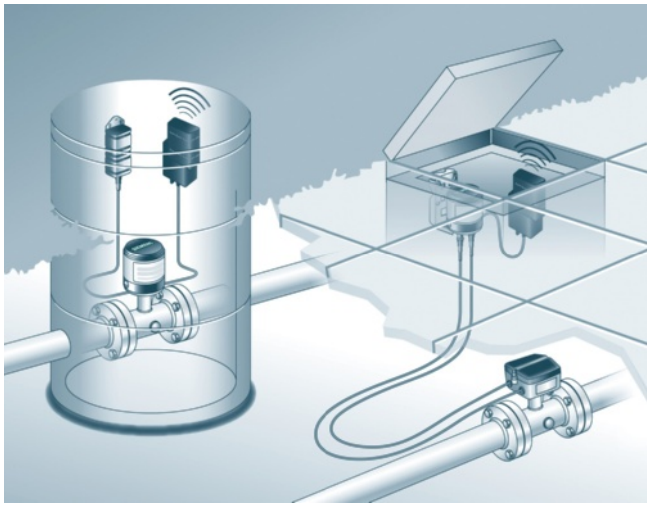

Modbus/Encoder module

9857153

© Siemens AG 2012

GSM/GPRS communication module

PC-IrDA connection

MAG 8000 GSM/GPRS Wireless Communication Module

The MAG 8000 GSM/GPRS wireless communication module provides the latest mobile technology using a Quad Band (850/900/1800/1900 MHz) module.

The GSM/GPRS module logs data from the MAG 8000 memory and from the two analog inputs (one 4 to 20 mA not powered by the module and one 5 V ratiometric powered by the module) and storage in the internal memory and later transmit it into a system or PC via email or SMS.

An additional synchronization function secures the initial collection time of the data independent of the sample rate used (minimum collection time: 1 per minute).

The package of information retrieved via the csv file includes:

- Time stamp
- Flow rate
- Tot 1
- Tot 2
- Tot 3
- Analog 1 (mA)
- Analog 2 (V)
- Battery lifetime
- Alarm list (as decimal format)

The GPRS technology makes it possible to send a higher amount of data via email. The data is secured using a POP 3 server configuration avoiding encryptions that require additional software. The configuration of the module is performed via SMS commands that allow you to define the users, email accounts, transmission settings, collection, etc.

The GSM/GPRS module is a compact built-in solution which can be installed in the existing MAG 8000 with SW version 3.02 and higher.

The battery lifetime will depend on signal strength and especially on the number of transmissions. Therefore we recommend an optimal setting of transmission once a day (see page 3/120). The module also includes the same power management algorithm that secures a very good calculation of the remaining battery lifetime.

The OPC server specifically designed for the MAG 8000 GSM/GPRS module is offered free of charge. With this value-added package, the opportunity for measurement data collection and further processing/analyzing for system integration and automation is offered.

© Siemens AG 2012

Battery-operated water meter MAG 8000

Function

MAG 8000 is a microprocessor-based water meter with graphical display and key for optimum customer operation and information on site. The transmitter drives the magnetic field in the sensor, evaluates the flow signal from the sensor and calculates the volume passing through. It delivers the required information via the integrated pulse output or communication interfaces as part of a system solution. Its intelligent functionality, information and diagnostics ensure optimum meter performance and information to optimize water supply and billing.

MAG 8000 can be ordered as a Basic or an Advanced version.

Features / Version	MAG 8000 Basic/ MAG 8000 Irrigation	MAG 8000 Advanced
Measuring frequency in battery power mode (Manually selected)	1/15, 1/30 or 1/60 Hz	from 6.25 to 1/60 Hz depending of sensor size
Output MAG 8000	2 FW/RV/AI/CA (max. 50 Hz pulse rate)	2 FW/RV/AI/CA (max. 100 Hz pulse rate)
Communication	Add-on	Add-on
Data logger	Yes	Yes
Insulation test	No	Yes
Leakage detection	No	Yes
Meter utilization	No	Yes
Statistics	No	Yes
Tariff	No	Yes
Settle date (Revenue)	No	Yes

Some information is accessible via the display whereas all information is accessible via the IrDA communication interface with the PDM software. Data and parameters are registered in a EEPROM. They can all be read, but changing the information demands a software password or a hardware key attached to the printed circuit board.

The SIMATIC PDM tool gives the possibility of testing and verifying the flowmeter on site and creating a printed "Qualification Certificate" with all specific data that define the quality status of the measurement.

The Qualification Certificate consists of two pages with information about the actual status of the sensor:

Part 1 provides general settings, sensor and battery info, totalizer values and pulse output settings.

Part 2 provides detailed information about electronic and sensor functionality and a main parameter list for evaluating the functionality of the MAG 8000 water meter.

© Siemens AG 2012

Technical specifications

Transmitter	
Installation	Compact (integral) Remote with factory-mounted cable 5, 10, 20 or 30 m (16.4, 32.8, 65.6 or 98.4 ft)
Enclosure	Stainl. steel top housing (AISI 316) and coated brass bottom. Remote wall mount bracket in stainless steel (AISI 304).
Cable entries	2 x M20 (one gland for one cable of size 6 … 8 mm (0.02 ... 0.026 ft) is included in the standard delivery)
Display	Display with 8 digits for main information. Index, menu and status symbols for dedicated information
Resolution	Totalized information can be displayed with 1, 2 or 3 decimals or automatic adjustment (default)
Flow unit	
Europe	Volume in m^3 and flow rate in m^3/h
US	Volume in Gallon and flow rate in GPM
Australia	Volume in Ml and flow rate as Ml/d
Optional display units	Volume: m^3 x 100, l x 100, G x 100, G x 1000, MG, CF x 100, CF x 1000, AF, Al, kl Flow: m^3/min, m^3/d, l/s, l/min, GPS, GPH, GPD, MGD, CFS, CFM, CFH
Digital output	2 passive outputs (MOS), individual galvanically isolated Maximum load ± 35 V DC, 50 mA short circuit protected
Output A function	Programmable as pulse volume – forward – reverse – forward/net – reverse/net
Output B function	Programmable as pulse volume (like output A), alarm
Output	Max. pulse rate of 50 Hz (only Basic version) and 100 Hz (only Advanced version), pulse width of 5, 10, 50, 100, 500 ms
Communication	IrDA: Standard integrated infrared communication interface with Modbus RTU protocol
Add-on modules	• RS 232 serial interface with Modbus RTU (Rx/Tx/GND), point to point with max. 15 m cable • RS 485 serial interface with Modbus RTU (+/-/GND), multidrop with up to 32 devices with max. 1000 m cable • Encoder interface module (for Itron 200WP) "Sensus protocol" • GSM/GPRS module with or without analog input cable
Power supply	Auto detection of power source with display symbol for operation power.
Internal battery pack	1 D-Cell 3.6 V/16.5 Ah 2 D-Cell 3.6 V/33 Ah
External battery pack	4 D-Cell 3.6 V/66 Ah

Mains power supply	• 12 ... 24 V AC/DC (10 … 32 V) 2 VA • 115 ... 230 V AC (85 … 264 V) 2 VA Both mains power supply systems are upgradable for battery backup via internal D-Cell (3.6 V 16.5 Ah) or external battery pack.
Cable	3 m (9.8 ft) for external connection to mains supply (without cable plug)

© Siemens AG 2012

Battery-operated water meter MAG 8000

Features	
Application identification	Tag number up to 15 characters
Time and date	Real time clock
Totalizer	
MAG 8000	3 totalizer: Configurable to Forward, Reverse and Bidirectional netflow 1 totalizer (following totalizer 1 setting) resetable via display key
Measurement	
Low flow cut-off	0.05 % of Q3 free adjustable
Empty pipe detection	Symbolised in display
Data logger	Logging of 26 records: selectable as daily, weekly or monthly logging
Alarm	Active alarm is indicated on the display
Data protection	All data stored in an EEPROM. Totalizers 1 and 2 are backed up every 10 min, statistic every hour and power consumption and temperature measurement every 4 hour. Password protection of all parameters and hardware protection of calibration and revenue parameters.
Battery power management	Optimal battery information on remaining capacity. Calculated capacity includes all consuming elements and available battery capacity is adjusted related to change in ambient temperature. Numbers of power-ups Date and time registered for first and last time power alarm.
Diagnostic	
Continuous self test including	Coil current to drive the magnetic field Signal input circuit Data calculation, handling and storing
Alarm statistics and logging for fault analyzing	Electrode impedance to check actual media contact Flow simulation to check pulse and communication signal chain for correct scaling Number of sensor measurements (excitations) Transmitter temperature (battery capacity calculation) Low impedance alarm for change in media Flow alarm when defined high flow exceeds Verification mode for fast measure performance check

Insulation test (only Advanced version)	Test of signal immunity against disturbance and bad installation. Test interval is selectable and measurement is interrupted during the test period of 4 min.
Leakage detection (only Advanced version)	Monitoring the lowest flow or volume during selected time window within 24 hours. Leakage is detected over a selectable period where monitored value exceed the possible leakage level. Min and max values are stored with date registration. Last store value visible on the display.
Meter Utilization (only Advanced version)	6 registers for monitoring total time the meter has operated in different flow intervals. Registered intervals are free selectable as % of Q_n (Q3)
Tariff (only Advanced version)	6 tariff registers count the volume delivered within the selected tariff windows, based on time of day or flow rates or a combination. Tariff can also be used for consumption profile where consumption is related to different time intervals or flow rates. Tariff values visible on the display.
Settling date (only Advanced version)	On a predefined date the totalizer 1 index value is stored. Old values are stored to show the latest two totalized 1 index values. Settling values visible on the display.
Statistic (only Advanced version)	Min. flow rate with time and date registration Max. flow rate with time and date registration Min. daily consumption with date registration Max. daily consumption with date registration Latest 7 days total and daily consumption Actual month consumption Latest month consumption
PC Configuration Software PDM	• Meter configuration – online and offline mode • Own parameter settings • Parameter documentation • Print and export of data and parameters PDM 6.0 Service Pack 2 – Basic and Online version

© Siemens AG 2012

MAG 8000 water meter uncertainty

To ensure continuous accurate measurement, flowmeters must be calibrated. The calibration is conducted at Siemens flow facilities with traceable instruments referring directly to the physical unit of measurement according to the International System of Units (SI).

Therefore, the calibration certificate ensures recognition of the test results worldwide, including the US (NIST traceability).

Siemens offers accredited calibrations assured to ISO 17025 in the flow range from 0.0001 m^3/h to 10 000 m^3/h.
Siemens Flow Instruments accredited laboratories are recognized by ILAC MRA (International Laboratory Accreditation Corporation - Mutual Recognition Arrangement) ensuring international traceability and recognition of the test results worldwide.

The selected calibration determines the accuracy of the meter. A standard calibration results in max. ± 0.4 % uncertainty and an extended calibration ± 0.2 % (for MAG 8000 irrigation ± 0.8 %). A calibration certificate follows every sensor and calibration data are stored in the meter unit.

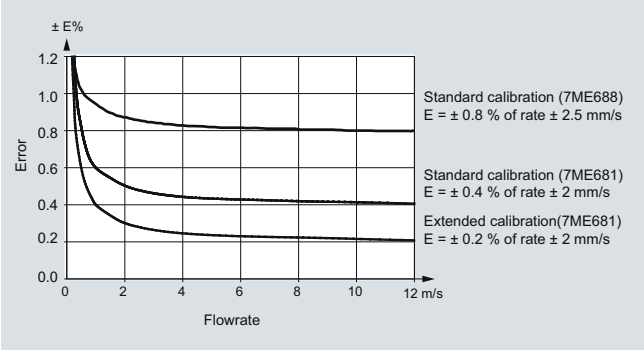

MAG 8000 (7ME6810) for Fire Service applications

MAG 8000 (7ME6810) is FM Fire Service approved for automatic fire protection systems according to the Fire Service Meters Standard, Class Number 1044. The approval is applicable for the sizes DN 50, DN 80, DN 100, DN 150, DN 200, DN 250, and DN 300 (2", 3", 4", 6", 8", 10", and 12") with ANSI B16.5 Class 150 flanges. The FM Fire Service approved product can be ordered via the Z-options P20, P21 and P22.

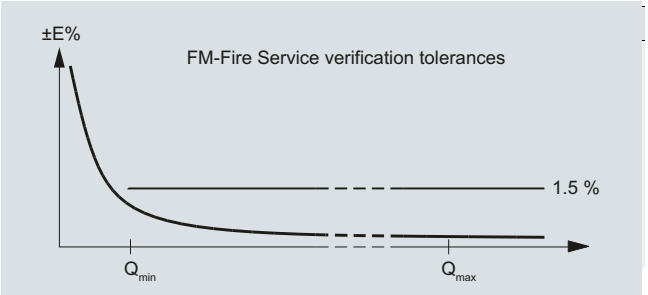

Grounding

The sensor body must be grounded using grounding straps and/or grounding rings to protect the flow signal against stray electrical noise. This ensures that the noise is carried through the sensor body and a noise-free measuring area within the sensor body. For MAG 8000 Irrigation grounding rings on both sides are factory-mounted.

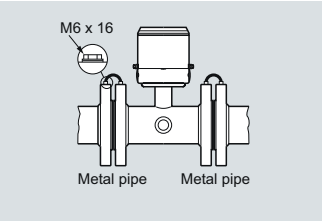

Metal pipes

On metal pipes, connect the straps to both flanges.

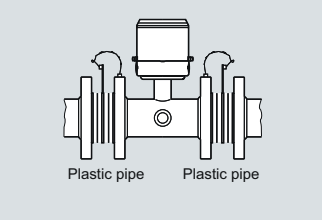

Plastic pipes

On plastic pipes and lined metal pipes, optional grounding rings must be used at both ends.

Grounding rings has to be ordered separately see „Grounding ring kit“

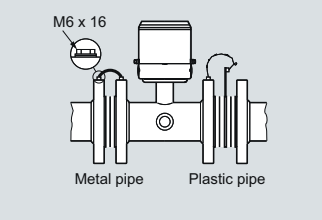

Combination of metal and plastic pipes

A combination of metal and plastic requires straps for metal pipe and grounding rings for plastic pipe.

Battery operation time and calculation

The battery operation time depends on the connected battery pack as well as the operation condition of the meter.

MAG 8000 calculates the remaining capacity every 4 hours and includes all consuming elements. Calculation compensates for temperature influence on battery capacity.

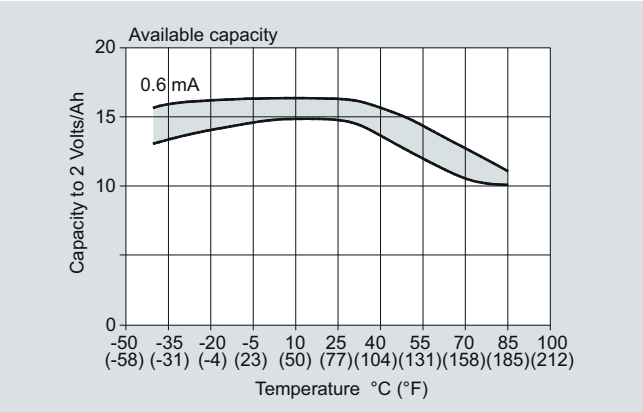

The graphic shows the effect from other temperatures.
A variation in temperature from 15 °C to 55 °C (59 to 131 °F) reduces the capacity by 17 % from 15 Ah to 12.5 Ah.

At typical revenue scenario of expected battery operation time can be seen in the table below.

The measurement for calculating the rest capacity of the battery life time is only completed if the system has no active fatal faults or the empty pipe is active. Maximum battery specification is 10 years operation.

© Siemens AG 2012

Battery-operated water meter MAG 8000

Scenario - Revenue application	
Output A	Pulse rate max. 10 Hz
Output B	Alarm or call-up
Meter dialog	1 hour per month
Add-com	None
Temperature	• 5 % at 0 °C (32 °F) • 80 % at 15 °C (59 °F) • 15 % at 50 °C (122 °F)

Battery lifetime (subject to the assumptions mentioned above)

MAG 8000 for abstraction and distribution network applications (7ME6810) and MAG 8000 CT for revenue and bulk metering (7ME6820)								
Excitation frequency (24 h operation)		**1/60 Hz**	**1/30 Hz**	**1/15 Hz**	**1/5 Hz**	**1.5625 Hz**	**3.125 Hz**	**6.25 Hz**
2 D-Cell battery 33 Ah Internal battery pack	DN 25 ... 200 (1" ... 8")	8 years	8 years	6 years	40 months	8 months	4 months	2 months
	DN 250 … 600 (10" ... 24")	8 years	6 years	4 years	20 months	4 months	2 months	N/A
	DN 700 ... 1 200 (28" ... 48")	6 years	4 years	2 years	1 year	2 months	N/A	N/A
4 D-Cell battery 66 Ah External battery pack	DN 25 ... 200 (1" ... 8")	N/A	10 years	10 years	80 months	16 months	8 months	4 months
	DN 250 ... 600 (10" ... 24")	N/A	10 years	10 years	40 months	8 months	4 months	N/A
	DN 700 ... 1 200 (28" ... 48")	10 years	8 years	4 years	2 years	4 months	N/A	N/A

MAG 8000 for irrigation applications (7ME6880)							
Excitation frequency (24 h operation)		**1/60 Hz**	**1/30 Hz**	**1/15 Hz**	**1/5 Hz**	**1.5625 Hz**	**3.125 Hz**
1 D-Cell battery	DN 50 ... 600 (2" ... 24")	52 months	40 months	25 months	12 months	2 months	1 months
2 D-Cell battery 33 Ah Internal battery pack	DN 50 … 600 (2" ... 24")	8 years	80 months	50 months	24 months	4 months	2 months
4 D-Cell battery 66 Ah Internal battery pack	DN 50 ... 600 (2" ... 24")	10 years	10 years	8 years	48 months	8 months	4 months

MAG 8000 GSM/GPRS battery lifetime scenario	
Transmission once a day and MAG 8000 factory settings	
2 D-Cell battery 33 Ah Internal battery pack	3 years
4 D-Cell battery 66 Ah Internal battery pack	7 years

External battery pack can be used as battery backup for mains power supply (if two cable entries is one cable gland are needed, order cable glands with two entries, see accessories on page 3/137).

Serial RS 232/RS 485 add-on communication modules are designed for mains powered systems as the battery operation time will be reduced. At 1 hour communication per month (all meter data collected 2 times per day) and the module is connected, the operation time is reduced to:

- RS 232 at low excitation frequency to 10 % and at high excitation frequency to 80 % of calculated operation time
- RS 485 at low excitation frequency to 50 % and at high excitation frequency to 90 % of calculated operation time

© Siemens AG 2012

Overview

Benefits

Easy to install

- Compact or remote solution with factory mounted cable and customer setting from factory
- IP68/NEMA 6P enclosure. Sensor can be buried.
- Flexible power supply - internal or external battery pack or mains power supply with battery back-up possibilities

Long-term stability/Low cost of ownership

- No moving parts in a robust construction means less wear and tear
- Basic and advanced transmitter versions with different optional add-on communication modules fulfil various customer requirements for high cost efficiency
- Up to 0.2 % maximum uncertainty
- Bi-directional measurement with an outstanding low flow performance
- Up to 10 years maintenance-free operation in typical applications

Intelligent information, easy to access

- Advanced information on site
- Advanced statistics and diagnostics
- Optional high-performance GSM/GPRS module offers an efficient solution for remote measurement and monitor via wireless communication.

Technical specifications

Meter	
Accuracy	Standard calibration: ± 0.4 % of rate ± 2 mm/s Extended calibration DN 50 ... DN 300 (2" ... 12"): ± 0.2 % of rate ± 2 mm/s
Media conductivity	Clean water > 20 µs/cm
Temperature	
Ambient	-20 ... +60 °C (-4 ... +140 °F)
Media	0 ... 70 °C (32 ... 158 °F)
Storage	-40 ... +70 °C (-40 ... +158 °F)
Enclosure rating	IP68/NEMA 6P; Cable glands mounted requires Sylgard potting kit to remain IP68/NEMA 6P, otherwise IP67/NEMA 4 is obtained; Factory-mounted cable provides IP68/NEMA 6P
Certificates and approvals	
Calibration (standard)	2 x 25 % and 2 x 90 %
Drinking water approvals	• NSF/ANSI Standard 61[1)] (cold water) USA • WRAS (BS 6920 cold water) UK • ACS Listed France • DVGW W270 Germany • Belgaqua (B) • MCERTS (GB)
Fire Service Approvals	FM Fire Service Meter (Class Number 1044)
Conformity	• PED: 97/23EC[2)] For pressure/temperature curves see MAG 3100 on page 3/71. EMC: IEC/EN 61000-6-3, IEC/EN 61000-6-2
Sensor version	DN 25 … 1200 (1" … 48")
Measuring principle	Electromagnetic induction
Excitation frequency	
Basic version	
• Battery-powered	DN 25 ... 150 (1" ... 6"): 1/15 Hz DN 200 … 600 (8" … 24"): 1/30 Hz DN 700 ... 1200 (28" ... 48"): 1/60 Hz
• Mains-powered	DN 25 ... 150 (1" ... 6"): 6.25 Hz DN 200 … 600 (8" … 24"): 3.125 Hz DN 700 ... 1200 (28" ... 48"): 1.5625 Hz
Advanced version	
• Battery-powered	DN 25 ... 150 (1" ... 6"): 1/15 Hz (adjustable up to 6.25 Hz; reduced battery lifetime) DN 200 … 600 (8" … 24"): 1/30 Hz (adjustable up to 3.125 Hz; reduced battery lifetime) DN 700 ... 1200 (28" ... 48"): 1/60 Hz (adjustable up to 1.5625 Hz; reduced battery lifetime)
• Mains-powered	DN 25 ... 150 (1" ... 6"): 6.25 Hz DN 200 … 600 (8" … 24"): 3.125 Hz DN 700 ... 1200 (28" ... 48"): 1.5625 Hz

© Siemens AG 2012

MAG 8000 for abstraction and distribution network applications (7ME6810)

Flanges	
EN 1092-1 (DIN 2501)	DN 25 and DN 40 (1" and 1½"): PN 40 (580 psi) DN 50 … 150 (2" … 6"): PN 16 (232 psi) DN 200 … 1200 (8" … 48"): PN 10 or PN 16 (145 psi or 232 psi)
ANSI 16.5 Class 150	1" … 24": 20 bar (290 psi)
AWWA C-207	28" … 48": PN 10 (145 psi)
AS 4087	DN 50 … 1200 (2" … 48"): PN 16 (232 psi)
Liner	EPDM
Electrode and grounding electrodes	Hastelloy C276/2.4819
Grounding straps	Grounding straps are premounted from the factory on each side of the sensor.

1) Including Annex F

2) For further information on the PED standard and requirements see page 9/14.

© Siemens AG 2012

Selection and Ordering data	Order No.
SITRANS F M MAG 8000 water meter	**7ME6810 -** ■■■■■ - ■■■■
Diameter	
DN 25 (1")	2D
DN 40 (1½")	2R
DN 50 (2")	2Y
DN 65 (2½")	3F
DN 80 (3")	3M
DN 100 (4")	3T
DN 125 (5")	4B
DN 150 (6")	4H
DN 200 (8")	4P
DN 250 (10")	4V
DN 300 (12")	5D
DN 350 (14")	5K
DN 400 (16")	5R
DN 450 (18")	5Y
DN 500 (20")	6F
DN 600 (24")	6P
DN 700 (28")[1]	6Y
DN 750 (30")[1]	7D
DN 800 (32")[1]	7H
DN 900 (36")[1]	7M
DN 1000 (40")[1]	7R
DN 1050 (42")[1]	7U
DN 1100 (44")[1]	7V
DN 1200 (48")[1]	8B
Flange norm and pressure rating	
EN 1092-1	
PN 10 (DN 200 ... 1200 (8" ... 48"))	B
PN 16 (DN 50 ... 1200 (2" ... 48"))	C
PN 16 non-PED (DN 700 .... 1200 (28"... 48"))	D
PN 40 (DN 25 ... 40 (1" ... 1½"))	F
ANSI B16.5	
Class 150	J
AWWA C-207	
Class D (28" ... 48")	L
AS4087	
PN 16 (DN 50 ... 1200 (2" ... 48"))	N
Sensor version	
EPDM liner and Hastelloy electrodes	3
Calibration	
Standard ± 0.4 % of rate ± 2 mm/s	1
Extended ± 0.2 % of rate ± 2 mm/s DN 25... 300 (1" ... 12")	2
Region version	
Europe (m^3, m^3/h, 50 Hz)	1
USA (Gallon, GPM, 60 Hz)	2
Australia (Ml, Ml/d, 50 Hz)	3
Transmitter type and installation	
Basic version integral on sensor	A
Basic version remote, cable mounted on sensor with IP68/NEMA 6P plugs:	
• 5 m (16.4 ft)	B
• 10 m (32.8 ft)	C
• 20 m (65.6 ft)	D
• 30 m (98.4 ft)	E
Advanced version integral on sensor	K
Advanced version remote, cable mounted on sensor with IP68/NEMA 6P plugs:	
• 5 m (16.4 ft)	L
• 10 m (32.8 ft)	M
• 20 m (65.6 ft)	N
• 30 m (98.4 ft)	P

Selection and Ordering data	Order No.
SITRANS F M MAG 8000 water meter	**7ME6810 -** ■■■■■ - ■■■■
Communication interface	
No additional "add-on" communication module installed	A
Serial RS 485 with Modbus RTU (Terminated as end device)	B
Serial RS 232 with Modbus RTU	C
GSM/GPRS communication module with remote antenna; 5 m (16.4 ft) cable	S
GSM/GPRS communication module with analog inputs and remote antenna; 5 m (16.4 ft) cable	T
Power supply	
Internal battery (no battery included)	0
Internal battery pack installed[2]	1
Power cable (1.5 m (4.9 ft)) with IP68/NEMA 6P plugs for external battery (no battery included)	2
12/24 V AC/DC power supply with battery backup and 3 m (9.8 ft) power cable for external connection (no battery included)	3
115 ... 230 V AC power supply with battery backup and 3 m (9.8 ft) power cable for external connection (no battery included)	4

1) The Diameter DN 700 (28") to DN 1200 (48") is only available as remote transmitter type installation.

2) Lithium batteries are subject to special transportation regulations according to United Nations "Regulation of Dangerous Goods, UN 3090 and UN 3091". Special transport documentation is required to observe these regulations. This may influence both transport time and costs.

Operating instructions for SITRANS F M MAG 8000

Description	Order No.
• English	**A5E03071515**
• German	**A5E00740986**
• Spanish	**A5E00741031**
• French	**A5E00741021**

This device is shipped with a Quick Start guide and a CD containing further SITRANS F literature.

All literature is also available for free at:
http://www.siemens.com/flowdocumentation

Operating instructions for MAG 8000 GSM/GPRS communication module

Description	Order No.
• English	**A5E03644134**

© Siemens AG 2012

MAG 8000 for abstraction and distribution network applications (7ME6810)

Selection and Ordering data	Order code
Additional information	
Please add **"-Z"** to Order No. and specify Order code(s) and plain text.	
Flow unit	
l/s	**L00**
MGD	**L01**
CFS	**L02**
l/min	**L03**
m^3/min	**L04**
GPM	**L05**
CFM	**L06**
l/h	**L07**
m^3/h	**L08**
GPH	**L09**
CFH	**L10**
GPS	**L11**
Ml/d	**L12**
m^3/d	**L13**
GPD	**L14**
Totalizer Volume calculation (default totalizer 1= forward and totalizer 2 = reverse)	
Totalizer 1 = RV, reverse flow	**L20**
Totalizer 1 = NET, net flow	**L22**
Totalizer 2 = FW, forward flow	**L30**
Totalizer 2 = NET, net flow	**L31**
Volume unit	
m^3	**L40**
Ml	**L41**
G	**L42**
AF	**L43**
l x 100	**L44**
m^3 x 100	**L45**
G x 100	**L46**
CF x 100	**L47**
MG	**L48**
G x 1000	**L49**
CF x 1000	**L50**
Al	**L51**
kl	**L52**
Pulse set up (default pulse A= forward and pulse B = Alarm)	
A function = RV, reverse flow	**L62**
A function = FWnet, forward net flow	**L63**
A function = RVnet, reverse net flow	**L64**
A function = Off	**L65**
Volume per pulse A = x 0.0001	**L70**
Volume per pulse A = x 0.001	**L71**
Volume per pulse A = x 0.01	**L72**
Volume per pulse A = x 0.1	**L73**
Volume per pulse A = x 1	**L74**
B function = FW, forward flow	**L80**
B function = RV, verse flow	**L81**
B function = FWnet, forward net flow	**L82**
B function = RVnet, reverse net flow	**L83**
B function = Alarm	**L84**
B function = Call up	**L85**
Volume per pulse B = x 0.0001	**L90**
Volume per pulse B = x 0.001	**L91**
Volume per pulse B = x 0.01	**L92**
Volume per pulse B = x 0.1	**L93**
Volume per pulse B = x 1	**L94**

Selection and Ordering data	Order code
Additional information	
Please add **"-Z"** to Order No. and specify Order code(s) and plain text.	
Data logger set up (default month logging)	
DataloggerInterval = Daily	**M31**
DataloggerInterval = Weekly	**M32**
Factory mounted cables	
5 m (16.4 ft) pulse cable A+B	**M81**
5 m (16.4 ft) communication cable RS 232/RS 485 terminated as end device	**M82**
20 m (65.6 ft) pulse cable A+B	**M84**
20 m (65.6 ft) communication cable RS 232/RS 485 terminated as end device	**M85**
Cello 2 channel, input cable 3 m (9.84 ft) with Brad Harrison micro-change 3 way connector	**M87**
Cello 2 channel, input cable 5 m (16.4 ft) with MIL-C-26482 spec. connectors	**M89**
SOFREL data logger cable 2 m with connector for SOFREL GSM module	**M92**
FM Fire Service Approval (with ANSI B16.5 Class 150 flanges)	
DN 50, DN 80 and DN 100 (2", 3" and 4")	**P20**
DN 150 and DN 200 (6" and 8")	**P21**
DN 250 and DN 300 (10" and 12")	**P22**

© Siemens AG 2012

Dimensional drawings

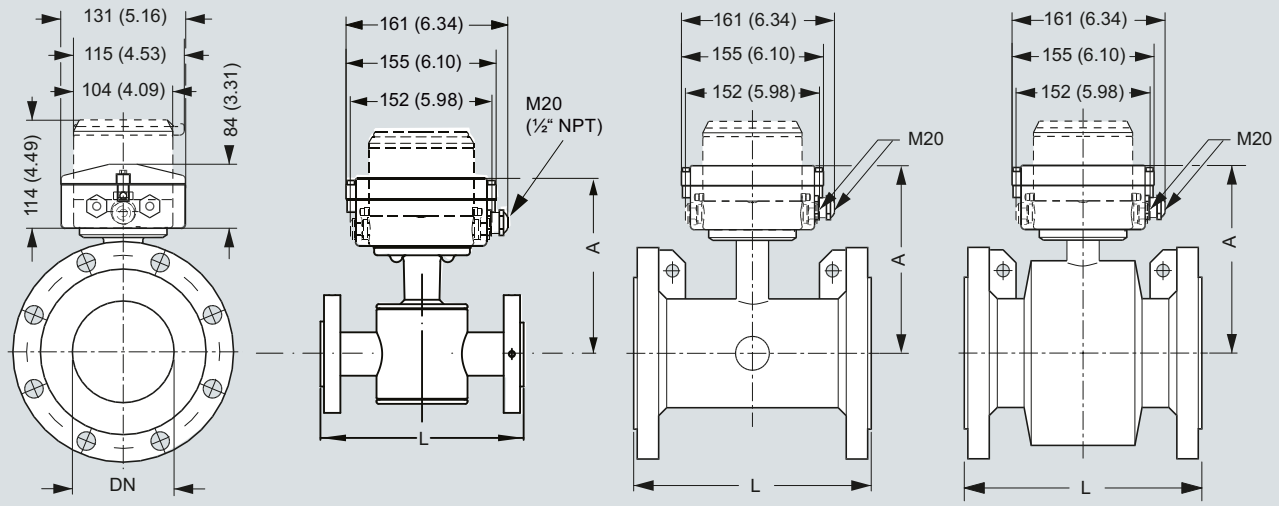

7ME6810/7ME6820	DN 25 and 40 (1" and 1½")	DN 50 ... 300 (2" ... 12")	DN 350 ... 1200 (14" ... 48")
7ME6880	N/A	N/A	DN 50 ... 600 (2" ... 24") For DN 50 ... 300: Add 7 mm (0.28") to length (L) For DN 350 ... 600: Add 8 mm (0.31") to length (L)

Dimensions in mm (inch)

Nominal DN size	A	L, lenghts						Weight[1]	
	EPDM (7ME6810 and 7ME6820)	EN 1092-1 PN 10	EN 1092-1 PN 16/ PN 16 non-PED	EN 1092-1 PN 40	ANSI 16.5 Class 150	AS 4087 PN 16	AWWA C-207 Class D		
mm (inch)	mm (inch)	mm	mm	mm	inch	mm	mm	kg	lbs
25 (1)	194 (7.7)	-	-	200	7.9	200	-	6	13
40 (1½)	204 (8.1)	-	-	200	7.9	200	-	9	20
50 (2)	195 (7.7)	-	200	-	7.9	200	-	11	25
65 (2½)	201 (8)	-	200	-	7.9	200	-	13	29
80 (3)	207 (8.2)	-	200	-	7.9	200	-	15	34
100 (4)	214 (8.5)	-	250	-	9.8	250	-	17	38
125 (5)	224 (8.9)	-	250	-	9.8	250	-	22	50
150 (6)	239 (9.5)	-	300	-	11.8	300	-	28	63
200 (8)	264 (10.5)	350	350	-	13.8	350	-	50	113
250 (10)	291 (11.5)	450	450	-	17.7	450	-	71	160
300 (12)	317 (12.6)	500	500	-	19.7	500	-	88	198
350 (14)	369 (14.6)	550	550	-	21.7	550	-	127	279
400 (16)	394 (15.6)	600	600	-	23.6	600	-	145	318
450 (18)	425 (16.8)	600	600	-	23.6	600	-	175	384
500 (20)	450 (17.8)	600	600	-	26.8	600	-	225	494
600 (24)	501 (19.8)	600	600	-	32.3	600	-	340	747
700 (28)	544 (21.4)	700	875/700	-	N/A	N/A	700	316	694
750 (30)	571 (22.5)	N/A	N/A	-	N/A	N/A	750	N/A	N/A
800 (32)	606 (23.9)	800	1000/800	-	N/A	N/A	800	398	1045
900 (36)	653 (25.7)	900	1125/900	-	N/A	N/A	900	476	1045
1000 (40)	704 (27.7)	1000	1250/1000	-	N/A	N/A	1000	602	1322
1050 (42)	704 (27.7)	N/A	N/A	-	N/A	N/A	1050	N/A	N/A
1100 (44)	755 (29.7)	N/A	N/A	-	N/A	N/A	1100	N/A	N/A
1200 (48)	810 (31.9)	1200	1500/1200	-	N/A	N/A	1200	887	1996

[1] For remote version the sensor weight is reduced with 2 kg (4.5 lb)

© Siemens AG 2012

Remote version

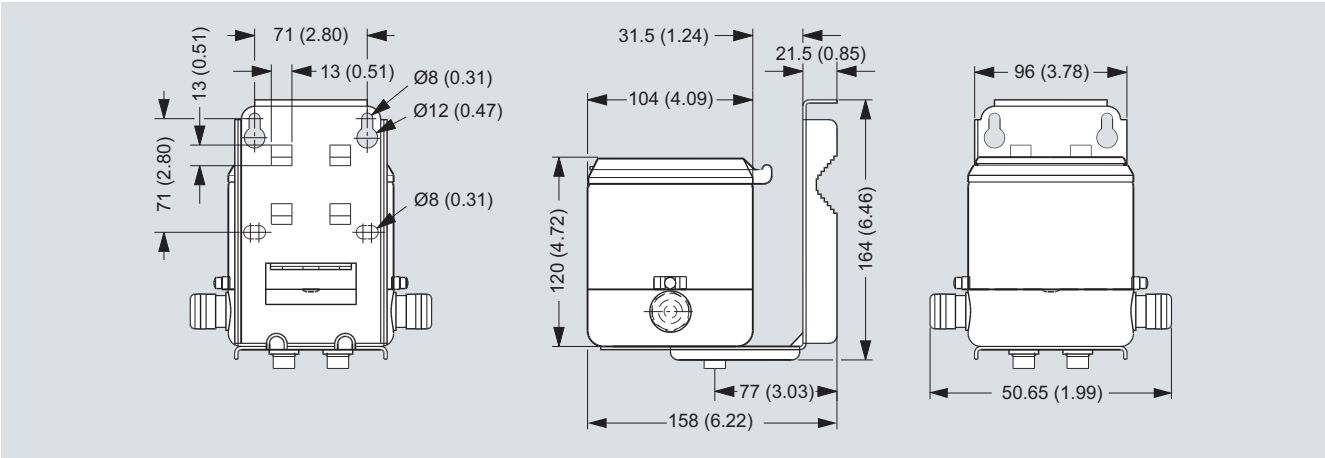

Dimensions in mm (inch), weight 3.5 kg (8 lbs)

External battery pack

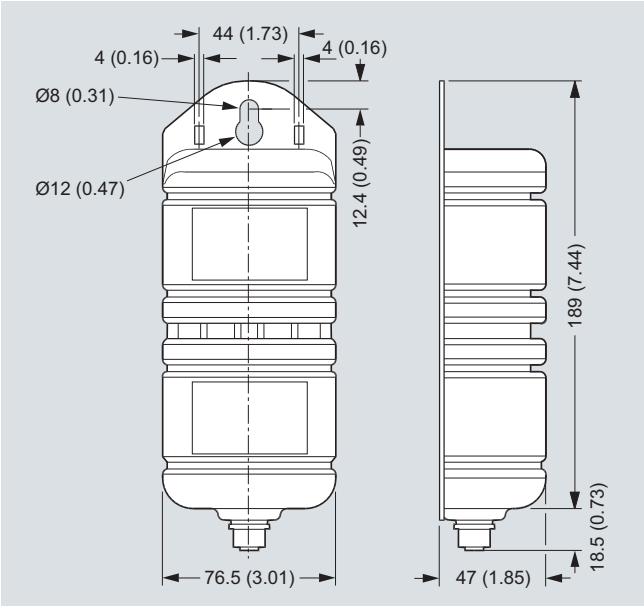

Dimensions in mm (inch), weight 2.0 kg (4.5 lbs)

Battery pack has to be mounted in upwards position to ensure maximum battery capacity.

Grounding rings

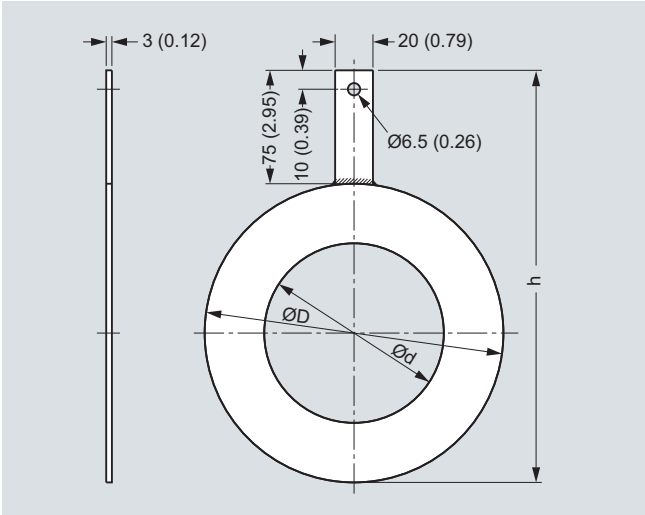

Dimensions in mm (inch) for grounding rings MAG 8000 with EPDM lining (7ME6810 and 7ME6820) DN 25 to DN 300

Dimension	Internal diameter (d)	Outside diameter (D)	h
DN 25	27	68	143
DN 40	38	88	163
DN 50	52	100	175
DN 65	64	120	195
DN 80	79	133	208
DN 100	95	158	233
DN 125	115	188	263
DN 150	145	216	336
DN 200	193	268	343
DN 250	246	324	399
DN 300	295	374	449

© Siemens AG 2012

Battery-operated water meter MAG 8000

Schematics

Electrical installation and pulse output – Connection diagram

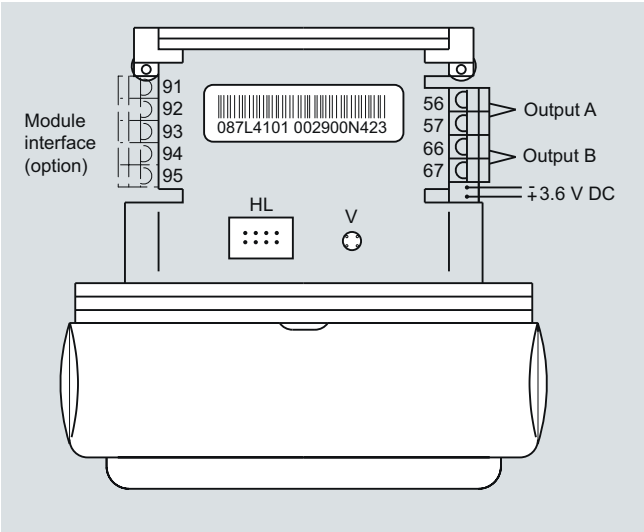

HL = Hardware lock key connection
V = Push button for verification mode

Pulse wire connection

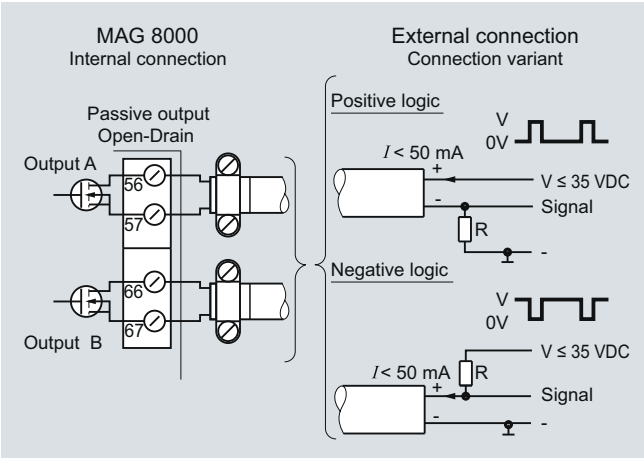

The pulse output can be configured as volume, alarm or call-up. The output can be connected as positive or negative logic. R = pull up/down is selected in relation to the Vx power supply and with a max. current I of 50 mA.

Use shielded cable to avoid EMC problems. Make sure the shield is correctly mounted under the cable clamp (no pig tail).

Electrical installation of GSM/GPRS module

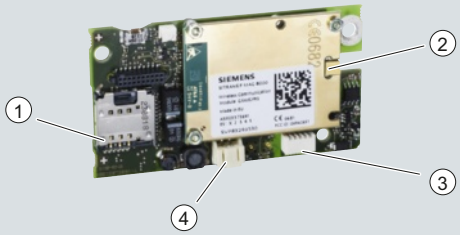

1 SIM card slot
2 GSM/GPRS antenna connector
3 Analog inputs inlet
4 Rechargeable battery inlet

© Siemens AG 2012

Accessories

Description	Order No.	
PC Flow Tool on CD (Download for free from www.siemens.com/flow)	◆ **FDK:087L6001**	
IrDA infrared interface adapter with USB for data acquisition with 1.2 m (3.9 ft) cable	◆ **FDK:087L4163**	
Battery backup for mains power supply, 1 pc. D-cell (3.6 V, 16.5 Ah)[1]	◆ **A5E03354392**	
Rechargeable Lithium battery for MAG 8000 GSM/GPRS communication module	◆ **A5E03436686**	
Internal battery pack, one set of 2 D-cell (3.6 V 33 Ah) and accessories for replacement[1]. Order cable FDK:087L4152 separately.	◆ **FDK:087L4150**	
External battery pack IP68/NEMA 6P with connector, 4 D-cell (3.6 V 66 Ah)[1]	◆ **FDK:087L4151**	
Mains power supply 12 ... 24 V AC/DC with battery backup and 3 m (9.8 ft) power cable for external connection (no battery included) Temperature range: Fixed laying: -40 ... +90 °C (-40 ... +194 °F) Flexible application: -30 ... +80 °C (-22 ... +176 °F)	**FDK:087L4210**	
Mains power supply 115 ... 230 V AC with battery backup up and 3 m (9.8 ft) power cable for external connection (no battery included)	◆ **FDK:087L4211**	
RS 232 add-on module, point to point communication interface with Modbus RTU protocol	**FDK:087L4212**	
RS 485 add-on module, multidrop communication interface with Modbus RTU protocol	◆ **FDK:087L4213**	
Encoder interface module, with "Sensus" protocol for ITRON 200WP and 100W radio, only for use with 7ME6820 and 7ME6880 routes	**A5E02475650**	
MAG 8000 GSM/GPRS communication module. Rechargeable battery, antenna and analog cable input must be ordered separately	**A5E03412758**	

Description	Order No.	
One cable entry 6 ... 8 mm (0.24 ... 0.31 ") M20 brass glands package (1 pc)	**FDK:087L4196**	
One cable entry 2 ... 5 mm (0.08 ... 0.20 ") M12 brass glands with M20 reduction. Package of 10 pcs	**FDK:087L4154**	
One cable entry 6 ... 8 mm (0.24 ... 0.31 ") M20 brass glands package (10 pcs)	**FDK:087L4155**	
One cable entry 8 ... 11 mm (0.31 ... 0.43 ") M20 brass glands package (10 pcs)	**FDK:087L4156**	
One cable entry 11 ... 15 mm (0.43 ... 0.59 ") M20 brass glands package (10 pcs)	**FDK:087L4157**	
Two cable entries 3.5 ... 5 mm (0.14 ... 0.20 ") M20 brass glands package (10 pcs)	**FDK:087L4158**	
Two cable entries 5.5 ... 7.5 mm (0.22 ... 0.30 "), M20 brass glands package (10 pcs)	**FDK:087L4159**	
High gain antenna for MAG 8000 GSM/GPRS (PVC, IP 68, cable length 5 m (16.4 ft), with SMA male connector (type RG 58) and internal SMA to SMP female cable adapter)	◆ **A5E03436689**	
Analog input cable for MAG 8000 GSM/GPRS (3 m (9.8 ft) cable with M12 connector A-Coding female 5 pins)	**A5E03436698**	
Potting kit for terminal box of flow sensors for IP68/NEMA 6P (not for Ex sensors)	◆ **FDK:085U0220**	
MAG 8000 Hardware key to access protected parameters	**FDK:087L4165**	
MAG 8000 demo - training unit pack operating on Alkaline batteries. Transmitter with Flow tool CD, IrDA interface adapter and hardware key (No dangerous goods limitations)	**FDK:087L4080**	
Alkaline battery for MAG 8000 demo transmitter (3 V 13 Ah) (No dangerous goods limitations)	**FDK:087L4142**	

◆ Short lead time (details in PMD)

[1] Lithium batteries are subject to special transportation regulations according to United Nations "Regulation of Dangerous Goods, UN 3090 and UN 3091". Special transport documentation is required to observe these regulations. This may influence both transport time and costs.

© Siemens AG 2012

Battery-operated water meter MAG 8000

When MAG 8000 (7ME6810 and 7ME6820) is installed in PVC or coated pipelines, grounding rings must be installed additionally.

Grounding rings, type C must be used for the 7ME6810 and 7ME6820 routes (sizes > DN 300). Please see grounding rings in the section MAG 3100 Grounding rings and be aware that the mentioned MLFB codes include only 1 grounding ring. Grounding rings DN 25 to DN 300 in stainless steel are packed in pairs and sold as a “grounding ring kit”.

Dimension	Order No.
DN 25	◆ **A5E01002946**
DN 40	◆ **A5E01002947**
DN 50	◆ **A5E01002948**
DN 65	◆ **A5E01002950**
DN 80	◆ **A5E01002952**
DN 100	◆ **A5E01002953**
DN 125	◆ **A5E01002954**
DN 150	◆ **A5E01002955**
DN 200	◆ **A5E01002957**
DN 250	◆ **A5E01002958**
DN 300	◆ **A5E01002962**

◆ Short lead time (details in PMD)

Spare parts

Description	Order No.	
MAG 8000 transmitter compact replacement kit[1]. No battery included. System number specified by ordering.	**FDK:087L4166**	
MAG 8000 transmitter remote replacement kit[1]. System number specified by ordering.	**FDK:087L4202**	
MAG 8000 (Advanced version) transmitter compact replacement kit[1]. No battery included. No system number required.	**FDK:087L4203**	
MAG 8000 (Advanced version) transmitter remote replacement kit[1]. No battery included. No system number required.	**FDK:087L4204**	

Description	Order No.	
MAG 8000 (Basic version) transmitter PCB replacement kit[1]. No system number required.	**A5E01171569**	
MAG 8000 (Advanced version) transmitter PCB replacement kit[1]. No system number required.	**FDK:087L4168**	
MAG 8000 (Advanced/Basic versions) transmitter PCB replacement kit[1]. System number specified by ordering.	**A5E03636168**	
Enclosure top including plastic lid, screws and blank product label	**FDK:087L4167**	
Power cable (1.5 m (4.9 ft)) with IP68/NEMA 6P plugs for external battery (no battery included); PE jacket, ambient temperature: -20 ... +60 °C (-4 ... +140 °F)	**FDK:087L4152**	
5 ft. Encoder interface cable with IP68/NEMA 6P plugs included, for ITRON 200WP and 100W radio; 22 AWG stranded TC conductors, polypropylene insulation, twisted pair, overall Beldfoil shield, 22 AWG stranded TC drain wire, PVC jacket	**A5E02551263**	
25 ft. Encoder interface cable with IP68/NEMA 6P plugs included, for ITRON 200WP radio; 22 AWG stranded TC conductors, polypropylene insulation, twisted pair, overall Beldfoil shield, 22 AWG stranded TC drain wire, PVC jacket	**A5E02551182**	

© Siemens AG 2012

Battery-operated water meter MAG 8000

Description	Order No.
Service tool kit package with various component for service and replacement.	**FDK:087L4162**
Remote cable set 5 m (16.4 ft) with IP68/NEMA 6P plugs - PG 13.5[2]	**FDK:087L4108**
Remote cable set 5 m (16.4 ft) with IP68/NEMA 6P plugs - M20	**A5E00862482**
Remote cable set 10 m (32.8 ft) with IP68/NEMA 6P plugs - PG 13.5[2]	**FDK:087L4109**
Remote cable set 10 m (32.8 ft) with IP68/NEMA 6P plugs - M20	**A5E00862487**
Remote cable set 20 m (65.6 ft) with IP68/NEMA 6P plugs - PG 13.5[2]	**FDK:087L4110**
Remote cable set 20 m (65.6 ft) with IP68/NEMA 6P plugs - M20	**A5E00862492**
Remote cable set 30 m (98.4 ft) with IP68/NEMA 6P plugs - PG 13.5[2]	**FDK:087L4111**
Remote cable set 30 m (98.4 ft) with IP68/NEMA 6P plugs - M20	**A5E00862497**

[1] Not applicable to Custody Transfer (CT) verified systems without re-verification

[2] For sensors produced before October 2007.

MAG 8000 (7ME6880) grounding ring service kit, consisting of 2 pcs. grounding rings, screws and gaskets
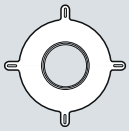
Dimension		Order No.
DN 50	2"	**A5E03082907**
DN 65	2½"	**A5E03082908**
DN 80	3"	**A5E03082909**
DN 100	4"	**A5E03082910**
DN 125	5"	**A5E03082911**
DN 150	6"	**A5E03082912**
DN 200	8"	**A5E03082913**
DN 250	10"	**A5E03082914**
DN 300	12"	**A5E03082915**
DN 350	14"	**A5E03082916**
DN 400	16"	**A5E03082917**
DN 450	18"	**A5E03082918**
DN 500	20"	**A5E03082919**
DN 600	24"	**A5E03082920**