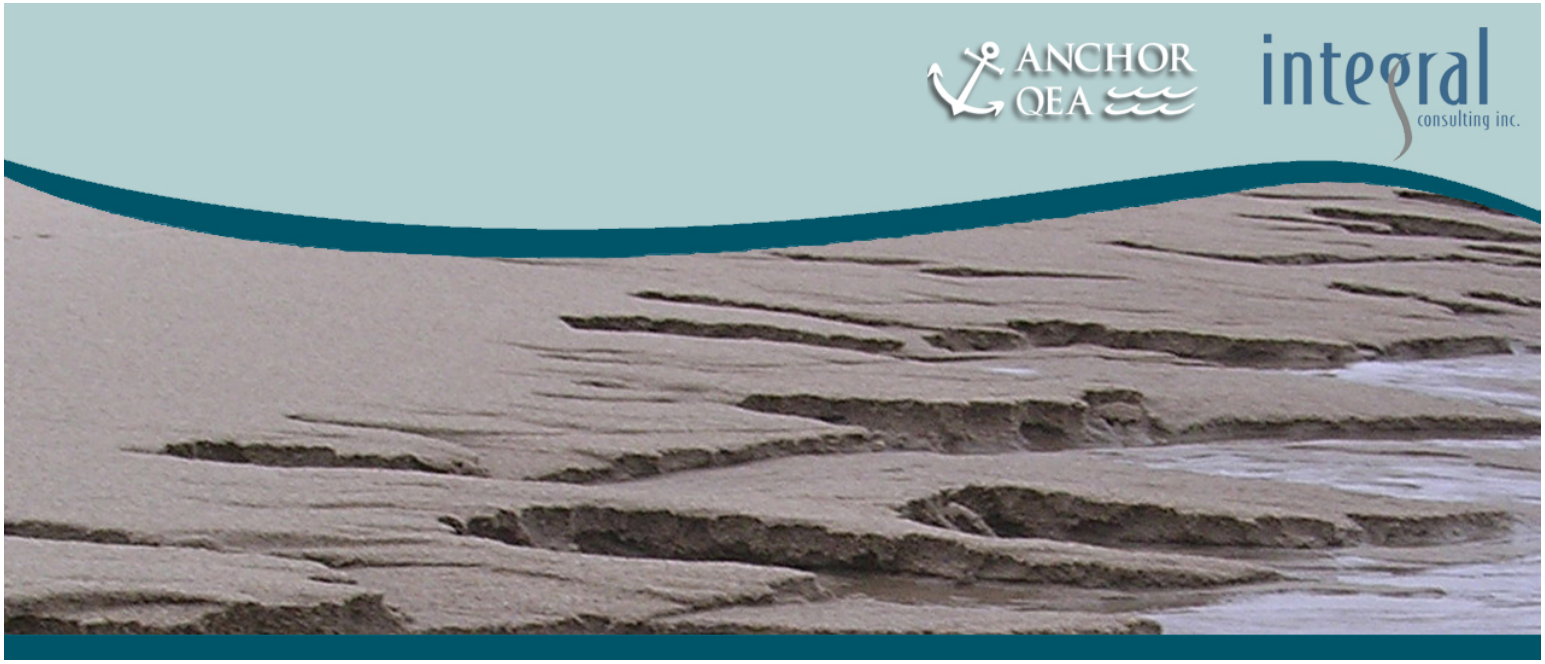

FINAL ADDENDUM 3 GROUNDWATER STUDY
SAMPLING AND ANALYSIS PLAN
SAN JACINTO RIVER WASTE PITS SUPERFUND SITE

Prepared for

U.S. Environmental Protection Agency, Region 6

McGinnes Industrial Maintenance Corporation

International Paper Company

Prepared by

Anchor QEA, LLC
614 Magnolia Avenue
Ocean Springs, Mississippi 39564

Integral Consulting Inc.
719 2nd Avenue, Suite 700
Seattle, Washington 98104

March 2016

9762013

FINAL ADDENDUM 3

GROUNDWATER STUDY SAMPLING AND ANALYSIS PLAN

SAN JACINTO RIVER WASTE PITS SUPERFUND SITE

Prepared for

U.S. Environmental Protection Agency, Region 6
McGinnes Industrial Maintenance Corporation
International Paper Company

Prepared by

Anchor QEA, LLC
614 Magnolia Avenue
Ocean Springs, Mississippi 39564

Integral Consulting Inc.
719 2nd Avenue, Suite 700
Seattle, Washington 98104

March 2016

Title and Approval Sheet

Groundwater Sampling and Analysis Plan Approvals

USEPA Remedial Project Manager:	Gary Miller	_____	Date: _____
USEPA Quality Assurance (QA) Reviewer:	Walter Helmick	_____	Date: _____
Respondents' Project Coordinator and Anchor QEA Project Manager:	David Keith	_____	Date: _____
McGinnes Industrial Maintenance Corporation Project Manager:	David Moreira	_____	Date: _____
International Paper Company Project Manager:	Philip Slowiak	_____	Date: _____
Integral Project Manager:	Jennifer Sampson	_____	Date: _____
Laboratory QA Coordinator:	Craig Hutchings	_____	Date: _____
Chemical Laboratory Project Manager:	To Be Determined	_____	Date: _____
Chemical Laboratory QA Manager:	To Be Determined	_____	Date: _____

TABLE OF CONTENTS

1 PROJECT MANAGEMENT 1

1.1 Distribution List 1

1.2 Introduction and Task Organization 1

1.3 Project Organization 2

2 STATEMENT OF THE PROBLEM, DATA QUALITY OBJECTIVES, AND ANALYTICAL APPROACH 6

2.1 Statement of the Problem: North of I-10 6

2.2 Statement of the Problem: South of I-10 6

2.3 Data Quality Objectives 7

2.4 Sample Collection Design 7

2.4.1.1 Analytic Approach: North of I-10 8

2.4.1.2 Analytic Approach: South of I-10 10

2.4.1.3 Quality Assurance Procedures 10

2.5 Documents and Records 11

2.5.1 Field Records 11

2.5.2 Laboratory Data Reports 11

2.5.3 Data Quality Documentation 12

2.5.4 Reports and Deliverables 13

3 DATA GENERATION AND ACQUISITION 14

3.1 Overall Approach 14

3.2 Groundwater Study Tasks 14

3.2.1 Scope: North of I-10 14

3.2.2 Scope: South of I-10 15

3.2.3 Common Scope Items 15

3.3 Sampling Design and Methods 15

3.3.1 Location Positioning 15

3.3.1.1 Design 15

3.3.1.2 Methods 16

3.3.2 Borehole Advancement and Soil Sampling 16

3.3.2.1 Design 16

3.3.2.2 Methods 17
3.3.3 Monitoring Well Installation 17
3.3.3.1 Design: North of I-10 17
3.3.3.2 Design: South of I-10 18
3.3.3.3 Methods 18
3.3.4 Monitoring Well Development 19
3.3.4.1 Design: North of I-10 19
3.3.4.2 Design: South of I-10 19
3.3.4.3 Methods 19
3.3.5 Solid-phase Microextraction Sampling 20
3.3.5.1 Design 20
3.3.5.2 Methods 20
3.3.6 Water Level Monitoring 24
3.3.6.1 Design 24
3.3.6.2 Methods 24
3.3.7 Decontamination 24
3.4 Sample Handling and Custody 24
3.5 Laboratory and Analytical Methods 25
3.5.1 Sampler Processing 25
3.5.2 Analysis of SPMEs for Target Compounds 26
3.6 Quality Control Samples 26
3.6.1 Sampler Preparation and Field Sampling 26
3.6.2 Laboratory 27
3.6.3 Representativeness and Comparability of All Data 30
3.7 Instrument and Equipment Testing, Inspection and Maintenance 30
3.8 Inspection and Acceptance of Supplies and Consumables 30
3.9 Data Management 31
3.9.1 Field Data 31
3.9.2 Laboratory Data 32

4 DATA VALIDATION AND USABILITY 33

5 SCHEDULE 34

6 REFERENCES 35

List of Tables

Table 1 Analytes, Analytical Concentration Goals, Method Reporting Limits, and Estimated Detection Limits

Table 2 Proposed Laboratory Methods for Samples

List of Figures

Figure 1a Site and Vicinity Map – MIMC and IPC

Figure 1b Site and Vicinity Map – IPC

Figure 2 Well Locations North of I-10

Figure 3 Proposed and Existing Well Locations South of I-10

Figure 4 Typical Vertical and Angled Well Construction Details – MIMC and IPC

Figure 5 Typical Vertical Well Construction Detail - IPC

List of Appendices

Appendix A Field Sampling Plan

LIST OF ACRONYMS AND ABBREVIATIONS

µL	microliter
µm	micrometer
CLP	Contract Laboratory Program
cm	centimeter
COC	chain-of-custody
DGPS	differential GPS
EDD	electronic data deliverable
EDL	estimated detection limit
FSP	Field Sampling Plan
I-10	Interstate Highway 10
Integral	Integral Consulting Inc.
IPC	International Paper Company
MCL	Maximum Contaminant Level
MDL	method detection limit
MIMC	McGinnes Industrial Maintenance Corporation
mL	milliliter
mm	millimeter
MRL	method reporting limit
NAVD 88	North American Vertical Datum of 1988
ORP	oxidation/reduction potential
PARCC	precision, accuracy, representativeness, completeness, and comparability
PDMS	polydimethylsiloxane
pg/L	picogram per liter
QA	quality assurance
QC	quality control
Respondents	International Paper Company and McGinnes Industrial Maintenance Corporation
RI/FS	Remedial Investigation/Feasibility Study
RPD	relative percent difference
SAP	Addendum 3 Groundwater Study Sampling and Analysis Plan

Site	San Jacinto River Waste Pits Superfund Site
SJRWP	San Jacinto River Waste Pits
SOP	standard operating procedure
SPME	solid-phase microextraction
TAC	Texas Administrative Code
TCEQ	Texas Commission on Environmental Quality
TCRA	Time Critical Removal Action
UAO	Unilateral Administrative Order
USEPA	U.S. Environmental Protection Agency

1 PROJECT MANAGEMENT

1.1 Distribution List

Title	Name
USEPA Remedial Project Manager	Gary Miller
USEPA QA Reviewer	Walter Helmick
Respondents' Project Coordinator and Anchor QEA Project Manager	David Keith
McGinnes Industrial Maintenance Corporation Project Manager	David Moreira
International Paper Company Project Manager	Philip Slowiak
Integral Project Manager	Jennifer Sampson
Field Lead	Chris Torell
Laboratory QA Coordinator	Craig Hutchings
Database Administrator	Dreas Nielsen
Chemical Laboratory Project Manager	To be determined
Chemical Laboratory QA Manager	To be determined

1.2 Introduction and Task Organization

This plan is an addendum to the Final Groundwater Sampling and Analysis Plan (Anchor QEA 2011a) for the groundwater study at the San Jacinto River Waste Pits (SJRWP) Superfund site (Site) (Figures 1a and 1b). This Addendum 3 Groundwater Study Sampling and Analysis Plan (SAP) is submitted on behalf of International Paper Company (IPC) and McGinnes Industrial Maintenance Corporation (MIMC) (collectively referred to as the Respondents), pursuant to the requirements of Unilateral Administrative Order (UAO), Docket No. 06-03-10, which was issued on November 20, 2009 (USEPA 2009). The UAO requires the Respondents to conduct a Remedial Investigation and Feasibility Study (RI/FS) for the Site.

As set forth in letters submitted by the Respondents to the U.S. Environmental Protection Agency (USEPA) dated July 20, 2011, activities north of Interstate Highway 10 (I-10; i.e., the northern impoundments) are conducted by MIMC and IPC and activities south of I-10 (i.e., the southern impoundment) are conducted by IPC. This SAP is organized accordingly, with aspects unique to either area presented separately and combined presentation of aspects common to both areas.

This SAP was prepared following identification of data gaps by USEPA. These data gaps are described in an email to David Keith on August 6, 2015 (USEPA 2015). The Respondents and USEPA engaged in additional discussions of the data gaps for groundwater on September 2, September 17, and September 29. USEPA's initial communication and the matters addressed during these meetings form the basis of this SAP, and are synthesized below.

The rationale, scope, and methods provided in this SAP build upon previous documents such as the RI/FS Work Plan, Final Groundwater Study Sampling and Analysis Plan (Anchor QEA 2011a), Revised Addendum 1 to the Groundwater Study Sampling and Analysis Plan for Additional Groundwater Sampling South of I-10 (Anchor QEA 2012), and Addendum 2 to the Groundwater Study Sampling and Analysis Plan - Additional Groundwater Sampling South of I-10 (Anchor QEA 2013). The work described in this SAP will be performed in compliance with the project Health and Safety Plan (Anchor QEA 2011b).

This section reviews the organizational structure for activities associated with the groundwater study, including project management and oversight, fieldwork, sample analysis, and data management. Contact information for key personnel is provided in Section 1.3.

For consistency, this SAP has been organized in the same way as previous SAPs were organized and certain text has been duplicated from those documents, as the information from those documents applies equally to this work.

1.3 Project Organization

MIMC and IPC have retained Anchor QEA, LLC, and Integral Consulting, Inc. (Integral) to perform this SAP. The primary contacts for each organization and USEPA are provided below.

Title	Name	Contact Information
USEPA	Gary Miller	U.S. Environmental Protection Agency Region 6 1445 Ross Avenue Dallas, TX 75202-2773 (214) 665-8318 millergaryg@epa.gov
McGinnes Industrial Maintenance Corporation Project Manager	David Moreira	McGinnes Industrial Maintenance Corporation 4 Liberty Lane West Hampton, NH 03842 (603) 929-5446 dmoreira@wm.com
International Paper Company Project Manager	Philip Slowiak	International Paper Company 6400 Poplar Avenue Memphis, TN 38197-0001 (901) 419-3845 philip.slowiak@ipaper.com

The names and quality assurance (QA) responsibilities of key project personnel for Anchor QEA and Integral are provided below. This information may be revised in a future addendum as appropriate.

SAP Personnel Quality Assurance Responsibilities

Title	Responsibility	Name	Contact Information
Project Coordinator	Coordination of project information and related communications on behalf of IPC and MIMC	David Keith	Anchor QEA, LLC 614 Magnolia Avenue Ocean Springs, MS 39564 (228) 818-9626 dkeith@anchorqea.com
Corporate Health and Safety Manager Anchor QEA	Oversight of health and safety program for field tasks associated with RI/FS	David Templeton	Anchor QEA, LLC 720 Olive Way Suite 1900 Seattle, WA 98101 (206) 287-9130 dtempleton@anchorqea.com
Field Lead Anchor QEA	Field data collection and implementation of the Health and Safety Plan in the field	Chris Torell	Anchor QEA, LLC 290 Elwood Davis Road Liverpool, NY 13088 (315) 453 9009 ctorell@anchorqea.com

Title	Responsibility	Name	Contact Information
Project Database Administrator Integral	Database development and data management	Dreas Nielson	Integral Consulting Inc. 719 2nd Avenue Suite 700 Seattle, WA 98104 (206) 957-0351 dnielson@integral-corp.com
Project Laboratory QA Coordinator Integral	Completeness of QA documentation and procedures	Craig Hutchings	Integral Consulting Inc. 1205 West Bay Drive NW Olympia, WA 98502 (360) 705-3534 chutchings@integral-corp.com

The following responsibilities apply to the project manager and QA manager at the analytical laboratories, which are to be determined.

The laboratory project manager is responsible for the successful and timely completion of sample analyses, and for performing the following tasks:

- Ensuring that samples are received and logged in correctly, that the correct methods and modifications are used, and that data are reported within specified turnaround times
- Reviewing analytical data to ensure that procedures were followed as required in this SAP, the cited methods, and laboratory standard operating procedures (SOPs)
- Keeping the task QA coordinator apprised of the schedule and status of sample analyses and data package preparation
- Notifying the task QA coordinator if problems occur in sample receiving, analysis, or scheduling or if control limits cannot be met
- Taking appropriate corrective action as necessary
- Reporting data and supporting QA information as specified in this SAP

The laboratory QA manager is responsible for overseeing the QA activities in the laboratory and ensuring data quality for this project. Specific responsibilities include the following:

- Overseeing and implementing the laboratory's QA program
- Maintaining QA records for each laboratory production unit
- Ensuring that QA and quality control (QC) procedures are implemented as required for each method and providing oversight of QA/QC practices and procedures

- Reviewing and addressing or approving nonconformity and corrective action reports
- Coordinating responses to any QC issues that affect this project with the laboratory project manager.

2 STATEMENT OF THE PROBLEM, DATA QUALITY OBJECTIVES, AND ANALYTICAL APPROACH

2.1 Statement of the Problem: North of I-10

In recent discussions with the Respondents, USEPA has expressed interest in:

1. Verifying the effectiveness of the armored cap installed as part of the Time Critical Removal Action (TCRA) completed in August 2011 with regard to preventing dioxin/furan release and transport to groundwater

To address this issue, USEPA is requiring the following:

1. Installing four monitoring wells north of I-10
   - Two wells will be angled from outside the cap to monitor the shallowest permeable zone beneath the waste.
   - Two wells will be installed vertically (one west of the impoundments and one at the north end of the central berm) to monitor the shallowest permeable zone.
2. Sampling the four new wells using passive samplers (solid-phase microextraction [SPMEs]) to measure dissolved TCDD, TCDF, and 2,3,4,7,8-PentaCDF

2.2 Statement of the Problem: South of I-10

In recent discussions with the Respondents, USEPA has expressed interest in:

1. Verifying that existing conditions south of I-10 are effectively containing dioxin/furan releases via shallow groundwater to surface water and to deep groundwater

To address this issue, USEPA is requiring the following:

1. Installing four monitoring wells along the western edge of the peninsula south of I-10
   - All wells will be vertical and will monitor the shallowest permeable zone.
2. Sampling the four new wells and previously installed six wells (five shallow wells and one deep well, all located south of I-10) using SPME passive samplers to measure dissolved TCDD, TCDF, and 2,3,4,7,8-PentaCDF

2.3 Data Quality Objectives

Results of groundwater analyses will be compared with state surface water quality criteria. If dioxins and furans are present outside of the expected area of the waste deposit, the data will be evaluated to determine spatial gradients in concentrations of detected congeners. Sampling and chemical analysis methods will be sufficiently precise to detect 0.0797 picogram per liter (pg/L) or below for each congener.

2.4 Sample Collection Design

Groundwater data will be collected from 14 monitoring wells to characterize both general groundwater quality, as well as the potential presence of dissolved 2,3,7,8-TCDD; 2,3,7,8-TCDF; and 2,3,4,7,8-PentaCDF in groundwater in the most shallow permeable zone at the Site. The shallowest permeable zone in the vicinity of each new well will be estimated based on previous data and confirmed using real-time field observations during drilling. Overburden soil samples will be collected continuously, only for stratigraphic logging and to inform well construction details. Monitoring wells will be installed with 5-foot screens, unless field conditions dictate otherwise.

Representative groundwater samples will be characterized for dissolved 2,3,7,8-TCDD; 2,3,7,8-TCDF; and 2,3,4,7,8-PentaCDF analyses using solid-phase microextraction (SPME) methods consistent with Mayer et al. (2000), Fernandez et al. (2009), and Lu et al. (2011), and at the detection limits shown on Table 1. The SPME sampling tool and SPME fibers will be 2.5 feet long and combined in series to result in 5-foot-long unit, designed to span the length of screens in the newly installed wells or centered in the middle of previously installed well screens, which range between 5 and 15 feet in length. During well development, conventional groundwater parameter data (turbidity, dissolved oxygen, specific conductance, temperature, pH, and oxidation/reduction potential) will be obtained.

Prior to deploying the SPME sampling tool, wells will be developed in accordance with ASTM D5521 to mitigate effects of drilling operations on in-situ formations and, in the case of the existing wells south of I-10, as redevelopment prior to additional sampling with the goal of collecting representative groundwater data. After development activities, a SPME sampling tool will be installed in each well, centered in the screened section, and allowed to

equilibrate for 60 days. The specific SPME tool construction, preparation, deployment, retrieval, and laboratory analytical methods are described in the Field Sampling Plan (FSP; Appendix A).

Groundwater analytical data will be validated consistent with the *Guidance on Environmental Data Verification and Validation* (USEPA 2002) and according to methods described in USEPA's *National Functional Guidelines* for dioxin data review (see Section 4; USEPA 2004, 2005, 2008).

Field methods (i.e., drilling, monitoring well installation and development, and sampling) are described in detail in the FSP (Appendix A).

2.4.1.1 Analytic Approach: North of I-10

The work described in this SAP is being conducted as required by USEPA to verify the effectiveness of the armored cap installed north of I-10 as part of the TCRA. To this end, samples will be collected from the first permeable zone in four newly installed wells. Samples will be collected using SPME samplers and will be analyzed for 2,3,7,8-TCDD; 2,3,7,8-TCDF; and 2,3,4,7,8-PentaCDF. SPME fibers will be analyzed in accordance with USEPA Method 1613B, including associated calibration standards and QA/QC procedures. QA/QC samples will be collected at all major steps. These include sampler materials blanks, field duplicates and field blanks. QC samples are discussed in detail in the FSP (Appendix A).

Accurate estimation of groundwater concentrations from SPME fiber data requires knowledge of the fiber-water partitioning coefficient (K_{fw}). As described in detail in the Porewater SAP Addendum 1, K_{fw} will be obtained using the regression equation with K_{ow} reported by Hsieh et al. (2011).

All SPME fibers will be spiked with performance reference compounds (PRCs) to check for equilibration and, if necessary, estimate the fraction of equilibrium achieved at each well location. Two of the PRCs, ^{37}Cl-2378-TCDD and ^{13}C-23478-PeCDF, are isotopes of two of the target compounds and will therefore be used to assess the fraction of equilibrium of 2,3,7,8-TCDD and 2,3,4,7,8-PentaCDF respectively. An exact stable isotope that does not

interfere with the laboratory analysis is not available for 2,3,7,8-TCDF, so as suggested in practical passive sampling guidance (Ghosh et al., 2014), an analytically non-interfering isotope of very similar K_{ow} (^{13}C-1234-TCDF) was selected for this target compound instead. Non-labeled impurities in the PRCs are negligible.

If the SPME fibers do not achieve equilibrium during the deployment period, as is often the case with highly hydrophobic contaminants such as the dioxin congeners, groundwater concentrations will be estimated using the following equation based on partitioning between the fiber and groundwater, with a correction based on the fraction of equilibrium achieved:

$$C_w = \frac{C_f}{K_{fw} \times f_e}$$

Where:

C_w = concentration of target compound in groundwater (pg/L)

C_f = concentration of target compound in fiber (pg/L)

K_{fw} = fiber-water partition coefficient

f_e = fraction of equilibrium (unitless)

Conventional groundwater parameters and water level data will be collected to characterize general groundwater quality and behavior (i.e., flow gradients) at the time of SPME installation. Soil samples will be collected to obtain stratigraphic data, assist with well construction, and assist with placing screened intervals to intersect the first permeable zone at each well location.

Although the approach to sampling in this groundwater study will generate estimates of the dissolved concentrations of the target compounds, the results of groundwater analyses will be compared with USEPA maximum contaminant levels and state drinking water quality criteria and, as applicable, Texas Commission on Environmental Quality (TCEQ) TRRP groundwater values and historical groundwater data from the site. It is noted that various criteria and certain historical site groundwater are on a whole water basis, whereas the methods to be used in this study result in estimates of the dissolved fraction. If analytes are present outside of the expected area of the waste deposit, data will be evaluated to determine spatial concentration gradients of detected congeners. Lastly, the study will be able to detect

the target dioxin and furan congeners at concentrations below the Texas SWQS for $TEQ_{DF,M}$ of 0.0797 pg/L in the dissolved phase.

2.4.1.2 Analytic Approach: South of I-10

The work described in this SAP is being conducted as required by USEPA to verify conditions south of I-10 are effectively containing dioxins and furans. To this end, samples will be collected from the first permeable zone in four newly installed wells and from the six existing monitoring wells previously installed south of I-10. Samples will be collected using SPME samplers and will be analyzed for 2,3,7,8-TCDD; 2,3,7,8-TCDF; and 2,3,4,7,8-PentaCDF. Details to estimate groundwater concentrations are described above.

Conventional groundwater parameters and water level data will be collected to characterize general groundwater quality and behavior (i.e., flow gradients) at the time of SPME installation. Soil samples will be collected to obtain stratigraphic data, assist with well construction, and assist with placing screened intervals to intersect the first permeable zone at each well location.

Although the approach to sampling in this groundwater study will generate estimates of the dissolved concentrations of the target compounds, the results of groundwater analyses will be compared with USEPA MCLs and state drinking water quality criteria and, as applicable, TCEQ TRRP groundwater values and historical groundwater data from the site. It is noted that various criteria and certain historical site groundwater are on a whole water basis. If analytes are present outside of the expected area of the waste deposit, data will be evaluated to determine spatial gradients in concentrations of detected congeners. Lastly, the study will be able to detect the target dioxin and furan congeners at concentrations below the Texas SWQS of 0.0797 pg/L in the dissolved phase.

2.4.1.3 Quality Assurance Procedures

QC procedures will be followed as described in the Final Groundwater Study Sampling and Analysis Plan (Anchor QEA 2011a), unless noted specifically in this SAP. Those procedures pertain to QC of field and laboratory data as well data representativeness and comparability control.

2.5 Documents and Records

Records will be maintained to document activities and data related to sample collection and laboratory analyses for work conducted pursuant to this SAP. Results of data verification and validation activities will also be documented. Procedures for documentation of these activities are described in this section.

The FSP (Appendix A) will be provided to the task participants listed in Section 1.1. Any revisions or amendments to any of the documents that make up the FSP will also be provided to these individuals.

2.5.1 Field Records

Components of relevant field documentation are discussed in Section 3 of the FSP (Appendix A). Field records that will be maintained include the following:

- Field logbooks
- Photo documentation
- Field data and sample collection information forms
- Field change request forms (as needed)
- Sample tracking/chain-of-custody (COC) forms

Observations recorded in the field logbook will be used to provide context and aid in presenting and interpreting analytical results. Additional details regarding the content and use of these documents are described in Section 3.1 of the FSP (Appendix A).

2.5.2 Laboratory Data Reports

Activities and results related to sample analysis will be documented at each laboratory. Internal laboratory documentation procedures are described in each laboratory's QA manuals. Each laboratory will provide a data package for each sample delivery group or analysis batch that is comparable in content to a full Contract Laboratory Program (CLP) package. The format of data may differ from CLP requirements. Each data package will contain information required for a complete QA review, including the following:

- A cover letter discussing analytical procedures and any difficulties that were encountered
- A case narrative referencing or describing the procedures used and discussing any analytical problems and deviations from SOPs and QC procedures
- COCs and cooler receipt forms
- A summary of analyte concentrations (to two significant figures, unless otherwise justified), method reporting limits (MRLs), and estimated detection limits (EDLs)
- Laboratory data qualifier codes appended to analyte concentrations, as appropriate, and a summary of code definitions
- Sample preparation, digestion, extraction, dilution, and cleanup logs
- Instrument tuning data
- Initial and continuing calibration data, including instrument printouts and quantification summaries, for all analytes
- Results for method and calibration blanks
- Results for all QA/QC checks, including but not limited to labeled compounds, surrogate spikes, internal standards, and laboratory control samples, provided on summary forms
- Instrument data quantification reports for all analyses and samples
- Copies of all laboratory worksheets and standards preparation logs

Data will be delivered by the laboratories in both hard copy and electronic format to the task QA coordinator, whom will be responsible for oversight of data verification, validation, and for archiving the final data and data quality reports in the project file. Electronic data deliverables (EDDs) will be compatible with the project database.

2.5.3 Data Quality Documentation

Data verification (i.e., confirming the representativeness, accuracy, and completeness of field and laboratory data) will be completed by the SJRWP technical team for data generated in the field, and by each laboratory for the data that it generates. Data validation reports for chemical analyses will be prepared as described in Section 4 and provided to the task QA coordinator. All changes to data stored in the database will be recorded in the database

change log. Any data tables prepared from the database for data users will include all qualifiers that were applied by the laboratory and during data validation.

2.5.4 Reports and Deliverables

The laboratories will keep the laboratory QA coordinator informed of their progress on a weekly basis. The laboratories will provide the following information:

- Inventory and status of samples held at the laboratory in spreadsheet format by sample delivery group
- Summaries of out-of-control laboratory QC data and any corrective actions implemented
- Descriptions and justification for any significant changes in methodology or QA/QC procedures

A table with results of chemical analyses and a map showing sampling locations will be provided to USEPA, as soon as practicable, after validated data are available. It is anticipated that data from this sampling effort will be presented to USEPA and evaluated as an addendum to the RI/FS.

3 DATA GENERATION AND ACQUISITION

3.1 Overall Approach

The overall approach to the work described in this SAP is to install eight monitoring wells and monitor the new eight and existing six wells south of I-10 through one round of sampling to obtain representative data regarding groundwater characteristics and behavior below the TCRA armored cap and along the west shore of the peninsula south of I-10. The proposed and existing monitoring well locations are shown in Figures 2 and 3. Data will be obtained using current and accepted investigation and evaluation techniques and methods.

3.2 Groundwater Study Tasks

This section provides a summary of the groundwater study tasks. Each task is discussed in detail in Section 3.3. Specific task methodologies are described in detail in the FSP (Appendix A). The methods described below may require modification depending on field observation or conditions or input from subcontractors selected for the work. Modified methods will remain congruent with applicable standards, guidance, practice, and professional judgment.

3.2.1 Scope: North of I-10

The scope of work for north of I-10 is as follows:

- Angled borehole advancement at two locations around the perimeter of the armored cap (Figure 2) with the goal of installing a 5-foot screened interval in the first permeable zone below waste materials
- Vertical borehole advancement at one location west of the armored cap (Figure 2) with the goal of installing a 5-foot screened interval in the first permeable zone and adjacent to waste materials
- Vertical borehole advancement at one location at the north end of the central berm between the western and eastern parts of the armored cap (Figure 2) with the goal of installing a 5-foot screened interval in the first permeable zone and between western and eastern waste materials

3.2.2 Scope: South of I-10

The scope of work for south of I-10 is as follows:

- Vertical borehole advancement at four locations along the western shore of the peninsula south of I-10 (Figure 3) with the goal of installing a 5-foot screened interval in the first permeable zone and downgradient of waste materials
- Redevelopment of the six existing wells south of I-10

3.2.3 Common Scope Items

Scope of work items common to both north and south of I-10 are as follows:

- Continuous soil/sediment sampling in each borehole for stratigraphic information and to inform well construction details
- Development of newly installed wells
- SPME sampling tool construction (prior to field deployment), installation, 60-day equilibration, retrieval, and analysis in the eight new wells and six existing wells at the Site
- Potentiometric surface elevation data collection from new and existing wells at the time of SPME sampling tool installation and retrieval
- Data evaluation, synthesis, and reporting
- Monitoring well abandonment of all wells following data reporting and with USEPA approval, consistent with Texas guidance (State of Texas 2010a)

3.3 Sampling Design and Methods

3.3.1 Location Positioning

3.3.1.1 Design

Location positioning consisting of latitude, longitude, and elevation data will be obtained to ascertain and document the position of sampling locations, well casings, ground surfaces, and other point locations as needed. Location positioning will be conducted to approximate the locations of planned activities (i.e., boring locations) and document completed activities (i.e., top of well casings). The investigation field crew will conduct pre-work positioning. A Texas-licensed professional surveyor will obtain post-work positioning data. Reported data

will be referenced to North American Datum 1983, state plane, Texas South Central, FIPS 4204, U.S. feet.

3.3.1.2 Methods

For pre-work needs, a hand-held GPS will be used to identify the positions of all sampling locations to within a plus or minus 2-meter horizontal. Figures 2 and 3 depict the sampling locations in plan view, as well as location coordinates for each proposed well.

Differential GPS (DGPS) will be used to document post-work positions and elevations if suitable accuracy can be verified. However, standard survey techniques may be required to obtain required accuracies of plus or minus 0.1 foot horizontal and 0.01 foot vertical. All post-work survey activities will be conducted by a Texas-licensed professional surveyor using Texas Administrative Code (TAC) procedures (State of Texas 2010b), and relative to the Harris County Subsidence District benchmark HGCSD 33 (26.57 feet North American Vertical Datum of 1988 [NAVD 88] – TSARP) previously used at the Site.

3.3.2 Borehole Advancement and Soil Sampling

3.3.2.1 Design

Eight boreholes will be advanced at locations to enable monitoring well installation, along with soil/sediment sampling and lithologic data collection (Figures 2 and 3). The borings will be advanced using sonic drilling methods to the first permeable zone at each location (estimated at approximately -10 to -15 feet NAVD 88). Figures 4 and 5 depict examples of anticipated well construction relative to the current understanding of Site lithology. Conditions noted during drilling for this work will be used to inform actual drilling depth and well construction details.

Soil samples will be collected at each well for lithologic assessment. In the unlikely, but potential, need of borehole abandonment precluding well installation, the borehole will be pressure grouted from depth to ground surface.

3.3.2.2 Methods

Borings will be advanced in accordance with standard sonic drilling procedures. Due to potential access difficulties at the Site, an all-terrain type of drilling machine may be required at the Site. Prior to drilling, utility markouts will be obtained and the ground conditions will be assessed by the drilling contractor to determine the type of equipment needed. Drill tooling (casing, rods, etc.) is anticipated to be 4-inch-nominal-inside diameter and will be selected considering eventual well construction requirements as well as anticipated subsurface conditions.

Soil samples will be collected continuously for logging purposes to total depth at each borehole. The FSP (Appendix A) further describes the drilling methods to obtain soil samples.

3.3.3 Monitoring Well Installation

3.3.3.1 Design: North of I-10

Groundwater monitoring wells will be installed in the four borings advanced north of I-10. It is anticipated that the well screens will be 5 feet in length and will target most shallow permeable zone above the Beaumont Formation clay identified during borehole advancement and sampling.

Well materials will be 2-inch-inside diameter, flush threaded Schedule 40 PVC. The well screen assembly will consist of filter sandpack placed to approximately 1 foot above the upper screen edge, followed by a bentonite slurry to within a few feet of ground surface. The remainder of the annulus will be filled with bentonite/cement to allow placement of the protective well cover.

Certain wells will be installed at an angle to allow sampling under the TCRA cap. These wells are anticipated to be constructed in boreholes advanced at a 45 degree angle from vertical. Figure 4 provides an anticipated schematic of a typical angled well (as well as a schematic of a typical vertical well), including screen positioning, sandpack and bentonite slurry placement and protective casing details.

3.3.3.2 Design: South of I-10

Groundwater monitoring wells will be installed in the four borings advanced south of I-10. It is anticipated that the well screens will be 5 feet in length and will target most shallow permeable zone above the Beaumont Formation clay identified during borehole advancement and sampling (Figure 5).

Well materials will be 2-inch-inside diameter, flush threaded Schedule 40 PVC. The well screen assembly will consist of filter sandpack placed to approximately 1 foot above the upper screen edge, followed by a bentonite slurry to within a few feet of ground surface. The remainder of the annulus will be filled with bentonite/cement to allow placement of the protective well cover.

3.3.3.3 Methods

Monitoring wells will be constructed and installed using sonic drilling techniques consistent with standard industry practice.

Following completion of a soil boring, well screen, and riser components will be combined and lowered into the drill casing to result in an assemblage of appropriate length with the screened interval at the desired depth. Annular materials will be placed with tremie pipe, or manually installed, depending on static water level in the casing, in a manner to minimize the risk of material bridging. Particular focus will be applied on verifying the appropriate constructed intervals and circumjacent placement of annular materials in the two planned angled wells. The materials in these wells will be placed with tremie pipe, or other similar method, emplaced using readily-available pre-packed well materials, or a combination thereof.

Each well will be finished with a sloping concrete pad, locking, stickup or flushmount protective casing, and expandable well cap. As needed, bollards will be installed to protect well locations. The wells will be abandoned in accordance with applicable Texas Commission on Environmental Quality (TCEQ) guidance (State of Texas 2010a) after sampling is completed and with USEPA approval.

3.3.4 Monitoring Well Development

3.3.4.1 Design: North of I-10

Immediately prior to deployment of SPME samplers (i.e., within 1 day), each monitoring well will be developed in general accordance with *Low Stress (low flow) Purging and Sampling Procedure for the Collection of Groundwater Samples from Monitoring Wells* (USEPA 1996) and with standard practice. The goal of well development is to remove fine soils from the annular sandpack and provide a good connection between the native soils and the annular sandpack, thereby enabling collection of representative water quality and hydrology data. Well development will also assist in stabilizing the sand filter pack.

3.3.4.2 Design: South of I-10

Immediately prior to deployment of SPME samplers (i.e., within 1 day), each monitoring well will be developed in general accordance with *Low Stress (low flow) Purging and Sampling Procedure for the Collection of Groundwater Samples from Monitoring Wells* (USEPA 1996) and with standard practice. The goal of well development is to remove fine soils from the annular sandpack and provide a good connection between the native soils and the annular sandpack, thereby enabling collection of representative water quality and hydrology data. Well development will also assist in stabilizing the sand filter pack. Well redevelopment will be conducted in existing wells to ensure good connection between the native soils and annular sandpack, as the wells were last sampled in 2013.

3.3.4.3 Methods

It is anticipated that the monitoring wells will be developed using continuous low-flow pumping. Development will be initiated following a minimum suitable period of time (i.e., 24 to 48 hours) allowing the annular seal materials to hydrate and properly cure.

During development, groundwater properties will be monitored to assess continued progress multi parameter monitoring via a continuous flow through cell will be used to monitor turbidity, dissolved oxygen, specific conductance, temperature, pH, and oxidation/reduction potential (ORP) during development. The meter will be calibrated according to manufacturer's instructions stabilization of values for these various parameters and will be the primary indicator that development is complete, consistent with USEPA (1996).

Generally, well development should continue until the turbidity levels are as low as reasonably feasible and continued development does not result in significant reduction in turbidity. The FSP (Appendix A) and USEPA (1996) provide detailed information regarding development activities.

3.3.5 Solid-phase Microextraction Sampling

3.3.5.1 Design

After development activities, a SPME tool will be inserted into each well and allowed to equilibrate for 60 days.

Groundwater concentrations will be measured *in situ* using SPME sampling devices consistent with Mayer et al. (2000), Fernandez et al. (2009), and Lu et al. (2011). The technology discussed herein uses SPME sampling devices that consist of a 2.5-foot glass fiber core coated with polydimethylsiloxane (PDMS; a polymer sorbent) which is inserted into a groove milled into a stainless steel plate, and in turn the plate assembly is placed in an approximate 2.5-foot-long stainless steel mesh screen section nominally 1 inch in diameter. The plate and screen allow for deployment at the midpoint of a monitoring well screen interval while avoiding physically damaging the fibers. The SPME assembly (two 2.5-foot-long samplers deployed in series) will be secured at the monitoring well screen zone midpoint using non-stretch, inert (i.e., nylon or similar) rope. In all installations, care will be used during deployment and retrieval to limit contact of the SPME tool with the monitoring well materials.

During well development (within 1 day before SPME sampling tool deployment), conventional water quality data (pH, temperature, conductivity, ORP, etc.) will be collected using a water quality meter calibrated according to manufacturer's instructions. One round of SPME samples will be collected. Sampling will be conducted following SAP approval.

3.3.5.2 Methods

The SPME sampling device is placed into the monitoring well and exposed to groundwater for approximately 60 days to allow target chemicals in the groundwater to achieve a high degree of equilibrium with the PDMS coating on the fiber. After the exposure period, the

SPME sampling devices are retrieved and the PDMS-coated glass fibers are analyzed for concentrations of the target dioxins and furans. The contaminant concentration that accumulates in the polymer sorbent at equilibrium is directly proportional to the dissolved contaminant concentration in the groundwater. As discussed in Section 2.4, all SPME fibers will be spiked with PRCs, and the fraction of equilibrium achieved (f_e) will be determined at all well locations. The fiber-water partition coefficient (K_{fw}) in conjunction with an estimate of the fraction of equilibrium achieved (f_e), if necessary, will be used to estimate the concentration of each target compound in groundwater from the mass in the PDMS coating of the fiber. As described in detail in TCRA Cap Porewater Assessment SAP, Addendum 1 (Integral and Anchor QEA 2016a), K_{fw} will be obtained using the regression equation with K_{ow} reported by Hsieh et al. (2011), as described in Table 1. Hsieh et al. 2011 performed their studies at 25° C and groundwater temperatures at the Site are not expected to depart substantially from this value.

PDMS-coated fibers are the central element to this sampling method. These fibers are commonly used in optical applications. The fibers that will be used in this study will be 1000-micrometer (µm)-diameter fibers with a 35-µm coating of PDMS, which corresponds to about 113.8 microliters (µL) of PDMS per meter of fiber. The fiber is manufactured by Polymicro Technologies of Phoenix, Arizona, which produces the glass fibers with the PDMS coating. In production, they maintain QC by regular measurement of the fiber coating.

PDMS-coated fibers are the central element to this sampling method. These fibers are commonly used in optical applications. The fibers that will be used in this study will be 1000- µm-diameter fibers with a 35-µm coating of PDMS, which corresponds to about 115.5 µL of PDMS per meter of fiber. The fiber is manufactured by Polymicro Technologies of Phoenix, Arizona, which produces the glass fibers with the PDMS coating. In production, they maintain QC by regular measurement of the fiber coating.

Prior to deployment, individual PDMS-coated glass fibers are placed into the inner plate of the sampler an approximately 2-millimeter (mm)-wide rectangular groove. This inner plate is placed into a protective case consisting of a 1-inch (25.4-mm)-inside-diameter stainless-steel mesh screen 2.5 feet (1,524 mm) in length. These openings in the screen allow

groundwater to flow to the PDMS-coated glass fiber surface throughout the study. The bottom and top of each rod will be capped with a PVC end cap during deployment.

The plate containing the PDMS-coated glass fiber is inserted into the well screen section, as shown below, to protect the fiber from potential mechanical degradation during installation into the monitoring well.

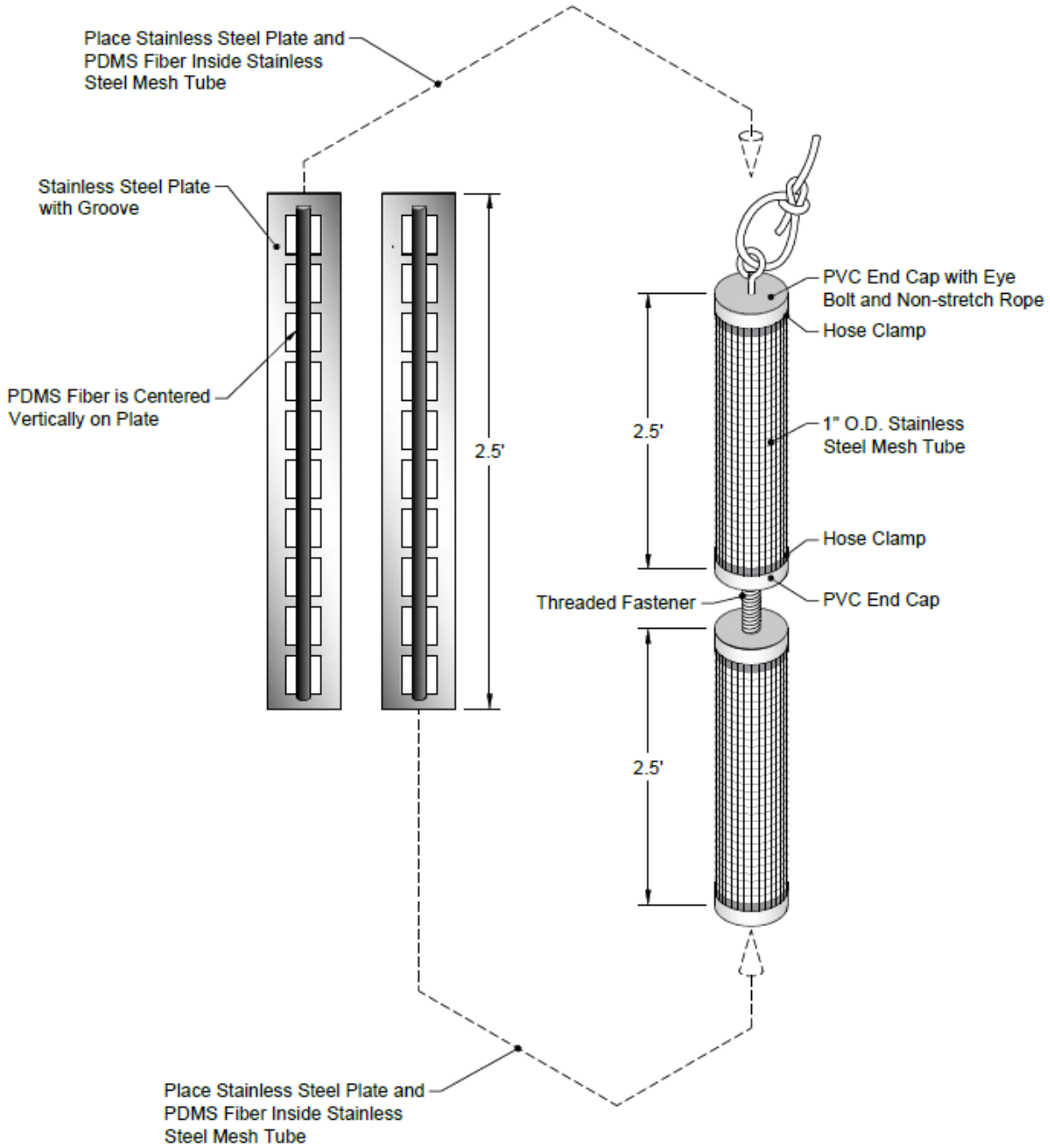

Not to Scale

NOTE:
Two 2.5' Samples will be combined to form a 5' long sampling unit. For field replicates, the plate will have two grooves, one groove for the parent fiber and one groove for the replicate fiber.

3.3.6 Water Level Monitoring

3.3.6.1 Design

Water level data will be collected from the monitoring wells prior to SPME deployment and retrieval activities.

3.3.6.2 Methods

Water level data will be collected from monitoring wells using a standard electric water level probe and consistent with Water Level Measurement, SOP No. 2043, Revision 0.0 (USEPA 1994).

3.3.7 Decontamination

Non-dedicated sampling, drilling, and monitoring equipment that contacts soils or groundwater will be decontaminated before first use, between sampling intervals, locations, or reading locations and prior to demobilization from the Site.

As discussed in detail in Section 2.2.8 of the FSP (Appendix A), decontamination of sampling equipment will be achieved using a water/soap wash, ethanol rinse and hexane rinse. Unless immediately used, sampling equipment will be wrapped in aluminum foil until use.

Drilling tools and equipment will be either steam cleaned between sampling locations or decontaminated using the sampling equipment procedure.

All solids and fluids generated during decontamination will be containerized for future characterization and disposal (see Section 2.5 of the FSP; Appendix A).

3.4 Sample Handling and Custody

Upon retrieval of the SPME tools from each monitoring well, the tool will be wrapped in aluminum foil, and placed in sample coolers with water ice, to maintain cooler temperature at 4° C (plus or minus 2° C). Bubble wrap will be placed in coolers to samples from impacting other samples, ice packs, or cooler sides/bottom in transit. As required, temperature blanks

will accompany samples in coolers. COC forms will be placed in each cooler describing the samples in the cooler.

After packing, coolers will be sealed with clear tape and affixed with custody seals. It is anticipated sample coolers will be hand-delivered to the laboratory or picked up at the Site by laboratory courier.

Custody of samples as well as custody transfer will be documented using field log books and COC forms. Samples will remain at all times in the custody of field staff, designated courier, or laboratory personnel.

Additional sample handling, packaging, and transport procedures are provided in the FSP (Appendix A).

3.5 Laboratory and Analytical Methods

3.5.1 Sampler Processing

SPME processing will take place at the analytical laboratory. The SPME sampling tool will be dismantled and the fiber carefully removed from the inner stainless steel plate using nitrile-gloved hands. Each fiber will then be rinsed with deionized water and placed on a foil-covered surface. If the fibers are broken upon arrival or at the time of removal, the sample handler will maintain the relative vertical position of the pieces. The overall length of the fiber recovered will be documented to the nearest millimeter in the laboratory bench sheet or log book, including notation of any missing pieces or broken fibers. Each fiber will be rinsed thoroughly with deionized water.

One 60-milliliter (mL) glass vial will be prefilled with 50-mL of hexane. These vials will be labeled with a waterproof marker noting the solvent and volume used. If the samples are prepared at the analytical laboratory, the laboratory blank will be prepared using the same solvent as is placed into the vials.

A ceramic column cutter will then be used to section the fiber from each location into 10-centimeter (cm) lengths, and the lengths will be recorded. The 10-cm lengths will then

subsequently be placed into prefilled 60-mL amber auto-sampler vials. Between each cut of fiber required for a unique sample (within a given sampling device), the ceramic column cutter will be decontaminated.

The cap on the vial will be sealed and, using a waterproof marker, labeled with the sample ID, total length of segments in the vial, date and time the sample was processed, and the analysis to be conducted; this information will also be noted on the laboratory bench sheet or logbook. The meniscus of the solvent will be marked on the vial with a waterproof marker.

The cap on the vial will be sealed and, using a waterproof marker, labeled with the sample ID, total length of segments in the vial, date and time the sample was processed, and the analysis to be conducted; this information will also be noted on the laboratory bench sheet or logbook. The meniscus of the solvent will be marked on the vial with a waterproof marker.

The FSP (Table A-1, Appendix A) provides a sample matrix that indicates analyses for each sample planned for collection.

3.5.2 Analysis of SPMEs for Target Compounds

The laboratory will use USEPA 1613B (USEPA 1994) for analysis of dioxins and furans in the solvent. The laboratory SOP for this procedure is the same as that used for analysis of sediment, and is presented in Sediment SAP Addendum 3, Attachment 2 (Integral and Anchor QEA 2016).

3.6 Quality Control Samples

3.6.1 Sampler Preparation and Field Sampling

Several types of samples will be collected and analyzed for QA/QC purposes. These include sampler materials blanks, field duplicates and field blanks. QC samples are discussed in detail in the FSP (Appendix A).

3.6.2 Laboratory

Analytical methods identified for SPME samples include requirements for laboratory QA/QC procedure. These requirements include corrective action, control limits, control samples, equipment calibrations, and records retention procedures. The laboratory QA/QC program is summarized below, and is consistent with previous groundwater investigations at the site.

The frequency of analysis for laboratory control samples and method blanks will be one for approximately every 20 samples or one per extraction batch, whichever is more frequent. Surrogate spikes, labeled compounds, and internal standards will be added to every field sample and QC sample, as required. Calibration procedures will be completed at the frequency specified in each method description. Performance-based control limits have been established by the laboratory. These and all other control limits specified in the method descriptions will be used by the laboratory to establish the acceptability of the data or the need for reanalysis of the samples. Laboratory control limits for recoveries of surrogate compounds, and laboratory control samples are provided in the laboratory's QA manual.

Precision, accuracy, representativeness, completeness, and comparability (PARCC) parameters are commonly used to assess the quality of environmental data. Bias represents the degree to which a measured concentration conforms to the reference value. The results for matrix spikes, laboratory control samples, field blanks, and method blanks will be reviewed to evaluate bias of the data.

The following calculation is used to determine percent recovery for a laboratory control sample or reference material:

$$\%R = (M / C) \times 100 \qquad (1\text{-}1)$$

Where:

%R	=	percent recovery
M	=	measured concentration in the spiked sample
U	=	measured concentration in the unspiked sample
C	=	concentration of the added spike

Results for field and method blanks can reflect systematic bias that results from contamination of samples during collection or analysis. Any analytes detected in field or method blanks will be evaluated as potential indicators of bias.

Precision reflects the reproducibility between individual measurements of the same property. Precision will be evaluated using the results of matrix spike duplicates, laboratory duplicates, field splits, and field replicates. Precision is expressed in terms of the relative standard deviation for three or more measurements and the relative percent difference (RPD) for two measurements.

The following equation is used to calculate the RPD between measurements:

$$RPD = |[(C1-C2) / ((C1 + C2) / 2)]| \times 100 \qquad (1\text{-}2)$$

Where:

RPD = relative percent difference

C1 = first measurement

C2 = second measurement

The relative standard deviation is the ratio of the standard deviation of three or more measurements to the average of the measurements, expressed as a percentage. Completeness will be calculated as the ratio of usable data (i.e., unqualified data and U- or J-qualified data) to generated data, expressed as a percentage. Completeness will be calculated for each suite of analytes for each sample type and sampling event.

Additional laboratory QC results will be evaluated to provide supplementary information regarding overall quality of the data, performance of instruments and measurement systems, and sample-specific matrix effects.

QC samples and procedures are specified in each method protocol that will be used for this project. Methods are summarized in Table 2. All QC requirements will be completed by the laboratory as described in the protocols, including the following (as applicable to each analysis):

- Instrument tuning
- Initial calibration
- Initial calibration verification
- Continuing calibration verification
- Calibration or instrument blanks
- Method blanks
- Laboratory control samples
- Internal standards
- Surrogate spikes/labeled compounds

To alert the data user to possible bias or imprecision, data qualifiers will be applied to reported analyte concentrations when associated QC samples or procedures do not meet control limits. Laboratory control limits for the methods that will be used for this Site investigation are provided in Table 1 and in the laboratory QA manuals. Data validation criteria and procedures are described in Section 4.

MRLs reflect the sensitivity of the analysis. Target MRLs for this study are summarized in Table 1. Method detection limits (MDLs) will be determined by the laboratory for each analyte, as required by USEPA (2009b). MDLs are statistically derived and reflect the concentration at which an analyte can be detected in a clean matrix (e.g., sand or distilled water) with 99 percent confidence that a false positive result has not been reported. MRLs are established by the laboratories at levels above the MDLs for the project analytes. The MRL values are based on the laboratory's experience analyzing environmental samples and reflect the typical sensitivity obtained by the analytical system in environmental samples. For this task, the concentration of the lowest standard in the initial calibration curve for each analysis is at the level of the MRL. This allows reliable quantification of concentrations to the MRL in the absence of matrix interferences.

Analyte concentrations will be reported to the EDL. Analytes detected at concentrations between the MRL and the EDL will be reported with a J-qualifier to indicate that the value is an estimate (i.e., the analyte concentration is below the calibration range). Non-detects will be reported at the MRL for all other analyses. The MRLs and EDLs will be adjusted by each laboratory, as necessary, to reflect sample dilution, and/or matrix interference.

3.6.3 Representativeness and Comparability of All Data

Representativeness and comparability are qualitative QA/QC parameters. Representativeness is the degree to which data represent a characteristic of an environmental condition. In the field, representativeness will be addressed primarily in the sampling design by the selection of sampling sites and sample collection procedures. In the laboratories, representativeness will be ensured by the proper handling and storage of samples and initiation of analysis within holding times.

Comparability is the qualitative similarity of one dataset to another (i.e., the extent to which different datasets can be combined for use). Comparability will be addressed through the use of field and laboratory methods that are consistent with methods and procedures recommended by USEPA and are commonly used for soil and groundwater studies.

3.7 Instrument and Equipment Testing, Inspection and Maintenance

Analytical instrument testing, inspection, maintenance, setup, and calibration will be conducted by the laboratory consistent with the requirements identified in the laboratory's SOPs and manufacturer instructions. In addition, each of the specified analytical methods provides protocols for proper instrument setup and tuning, and critical operating parameters. Instrument maintenance and repair will be documented in the maintenance log or record book.

3.8 Inspection and Acceptance of Supplies and Consumables

The quality of supplies and consumables used during sample collection and laboratory analysis can affect the quality of the project data. All equipment that comes into contact with the samples and extracts must be sufficiently clean to prevent detectable contamination, and the analyte concentrations must be accurate in all standards used for calibration and QC purposes.

Pre-cleaned sample jars (with documentation) will be provided by the laboratories. All containers will be visually inspected prior to use, and any suspect containers will be discarded.

Reagents of appropriate purity and suitably cleaned laboratory equipment will also be used for all stages of laboratory analyses. Details for acceptance requirements for supplies and consumables at the laboratories are provided in the laboratory SOPs and QA manuals. All supplies will be obtained from reputable suppliers with appropriate documentation or certification. Supplies will be inspected to confirm that they meet use requirements, and the inspection will be logged in the field book (i.e., for supplies used in the field) or by the laboratories.

3.9 Data Management

During field, laboratory, and data evaluation operations, effective data management is critical to providing consistent, accurate, and defensible data and data products. Data management systems and procedures will be used to establish and maintain an efficient organization of the environmental information collected. Procedures and standards for conducting specific data management tasks (i.e., creation, acquisition, handling, storage, and distribution of data) will be documented in a project data management manual. Essential elements of data management and reporting activities associated with the sampling program are discussed in the following sections.

Project data will be maintained in a relational database designed to accommodate all the types of environmental measurements that will be made during this field effort, as described in the data management plan, which is included as Appendix B of the RI/FS Work Plan (Anchor QEA and Integral 2010). On-line access to the database will be provided to members of the project team and regulatory oversight.

3.9.1 Field Data

Daily field records (a combination of field logbooks, field forms, GPS records, and COC forms) will make up the main documentation for field activities. Detailed guidelines for entry of information during field sampling are provided in the FSP (Appendix A). Upon completion of sampling, hardcopy notes, and forms will be scanned to create an electronic record. Information on sampling locations, dates, depths, equipment, and other conditions, and sample identifiers, will be entered into the project database. One hundred percent of

hand-entered data will be verified based on hard copy records. Electronic QA checks to identify anomalous values will also be conducted following entry.

3.9.2 Laboratory Data

The analytical laboratories will each submit data in both electronic and hard-copy format. The project database administrator or his designated data manager will provide the desired format for EDDs to the laboratories, and the project data manager and laboratory coordinator will discuss these specifications with laboratory QA managers prior to data delivery and tailor them as necessary to specific laboratory capabilities. QA checks of format and consistency will be applied to EDDs received from the laboratory. After any issues have been resolved, the data will be provided to USEPA and loaded into the project database. Each dataset loaded will be linked to the electronic document of the relevant laboratory data package. Data summaries will be produced from the database for use by data validators. Validators will return edited versions of these summaries, and the edits will then be incorporated into the database. An automated change log will be maintained by the database so that the history of all such edits is maintained, and the provenance of each data value can be determined.

4 DATA VALIDATION AND USABILITY

Data generated in the field and at the laboratories will be verified and validated according to criteria and procedures described in the Final Groundwater Study Sampling and Analysis Plan (Anchor QEA 2011a).

5 SCHEDULE

The dates of SPME preparation, deployment, and retrieval will depend on final approval of this SAP and the resolution of access issues that may arise. Preparation of samplers will begin no later than 1 week following approval of this SAP and obtaining access agreement(s) as warranted, and will be deployed as soon as practicable following preparation. Performance of the work described in this SAP will be consistent with the schedule discussed with USEPA on September 29, 2015.

6 REFERENCES

Anchor QEA, LLC, 2011a. *Final Groundwater Study Sampling and Analysis Plan, San Jacinto River Waste Pits Superfund Site*. Prepared for McGinnes Industrial Maintenance Corporation, International Paper Company, and U.S. Environmental Protection Agency, Region 6.

Anchor QEA, 2011b. *Revised Health and Safety Plan, San Jacinto River Waste Pits Superfund Site*. Prepared for McGinnes Industrial Maintenance Corporation, International Paper Company, and U.S. Environmental Protection Agency, Region 6.

Anchor QEA, 2012. *Addendum 1 to the Groundwater Study Sampling and Analysis Plan – Additional Groundwater Sampling South of I-10*. Prepared for International Paper Company and U.S. Environmental Protection Agency, Region 6.

Anchor QEA, 2013. *Addendum 2 to the Groundwater Study Sampling and Analysis Plan – Additional Groundwater Sampling South of I-10*. Prepared for International Paper Company, and U.S. Environmental Protection Agency, Region 6.

Anchor QEA and Integral (Integral Consulting, Inc.), 2010. *Remedial Investigation/Feasibility Study Work Pla*n. Prepared for McGinnes Industrial Maintenance Corporation, International Paper Company, and U.S. Environmental Protection Agency, Region 6.

ASTM International, D5521-94. Standard Guide for Development of Ground-Water Monitoring Wells in Granular Aquifers.

Fernandez, L.A., C.F. Harvey, and P.M. Gschwend, 2009. Using performance reference compounds in polyethylene passive samplers to deduce sediment porewater concentrations for numerous target chemicals. *Environ. Sci. Technol.* 43:8888–8894.

Ghosh, U., S. Kane Driscoll, R.M. Burgess, M.T.O Jonker, D. Reible, F. Gobas, Y. Choi, S.E. Apitz, K.A. Maruya, W.R. Gala, M. Mortimer, and C. Beegan, 2014. Passive sampling methods for contaminated sediments: Practical guidance for selection, calibration, and implementation. *Integr. Environ. Assess. Manag.* 10:210–223.

Hsieh, M.-K., C.-T. Fu, and S.-C. Wu, 2011. Simultaneous estimation of Glass-Water distribution and PDMS-water partition coefficients of hydrophobic organic compounds using simple batch method. *Environ. Sci. Technol.* 45:7785–7791.

Integral and Anchor QEA, 2016a. T*CRA Cap Porewater Assessment Sampling and Analysis Plan, Addendum 1.* Prepared for McGinnes Industrial Maintenance Corporation, International Paper Company, and U.S. Environmental Protection Agency, Region 6.

Integral and Anchor QEA, 2016b. *Sampling and Analysis Plan: Sediment Study, Addendum 3.* Prepared for McGinnes Industrial Maintenance Corporation, International Paper Company, and U.S. Environmental Protection Agency, Region 6.

Lu, X., A. Skwarski, B. Drake, and D. Reible, 2010. Predicting bioavailability of PAHs and PCBs with porewater concentrations measured by solid-phase microextraction fibers. *Environ. Toxicol. Chem.* 30(5):1109–1116.

Mayer, P., W.H.J. Vaes, F. Wijnker, K.C.H.M. Legierse, R.H. Kraaij, J. Tolls, and J.L.M. Hermens, 2000. Sensing dissolved sediment porewater concentrations of persistent and bioaccumulative pollutants using disposable solid-phase microextraction fibers. *Environ. Toxicol. Chem.* 34:5177–5183.

State of Texas, 2010a. Texas Administrative Code Title 16, Part 4, Chapter 76, Rule §76.1004

State of Texas, 2010b. Available from: http://info.sos.state.tx.us/pls/pub/readtac$ext.ViewTAC?tac_view=5&ti=22&pt=29&ch=663&sch=B&rl=Y.

USEPA (U.S. Environmental Protection Agency), 1994. Water Level Measurement, SOP No. 2043, Revision 0.0. October 3, 1994.

USEPA, 1994. Method 1613, Tetra- Through Octa-chlorinated Dioxins and Furans by Isotope Dilution HRGC/HRMS. U.S. Environmental Protection Agency, Office of Water, Washington, DC.

USEPA, 1996. *Low Stress (low flow) Purging and Sampling Procedure for the Collection of Ground Water Samples from Monitoring Wells*. USEPA, Region 1.

USEPA, 2002. *Guidance on Environmental Data Verification and Validation*. USEPA QA/G-8. USEPA, Office of Environmental Information, Washington, DC.

USEPA, 2004. *USEPA Contract Laboratory Program National Functional Guidelines for Inorganic Data Review*. USEPA, Office of Emergency and Remedial Response, Washington, DC.

USEPA, 2005. *USEPA Contract Laboratory Program Functional Guidelines for Chlorinated Dioxin/Furan Data Review*. USEPA, Office of Emergency and Remedial Response, Washington, DC.

USEPA, 2008. *USEPA Contract Laboratory Program Functional Guidelines for Superfund Organic Methods Data Review*. USEPA, Office of Emergency and Remedial Response, Washington, DC.

USEPA, 2009a. *Unilateral Administrative Order for Remedial Investigation/Feasibility Study.* USEPA Region 6 CERCLA Docket No. 06-03-10. In the matter of: San Jacinto River Waste Pits Superfund Site Pasadena, Texas. International Paper Company, Inc.; McGinnes Industrial Management Corporation; and the Respondents.

USEPA, 2009b. SW-846 On-line, Test Methods for Evaluating Solid Waste - Physical/Chemical Methods. http://www.epa.gov/epaoswer/hazwaste/test/main.htm last updated March 23, 2009.

USEPA, 2015. Email from G. Miller, USEPA, to D. Keith, Anchor QEA, regarding data gaps. August 6, 2015.

TABLES

Table 1
Analytes, Analytical Concentration Goals , Method Reporting Limits, and Estimated Detection Limits for Groundwater Samples

Analyte	CAS Number	Analytical Concentration Goal (pg/L)	PDMS Method Reporting Limit (pg) [a]	Equipment Detection Limit (pg) [b]	Calculated Detection Limit in Porewater (pg/L) [c]
Dioxins/furans					
2,3,7,8-Tetrachlorodibenzo-*p* -dioxin	1746-01-6	NA	10	0.68	0.0008
2,3,7,8-Tetrachlorodibenzofuran	51207-31-9	NA	10	0.70	0.0028
2,3,4,7,8-Pentachlorodibenzofuran	57117-41-6	NA	50	0.80	0.0007
TEQ_{DF} Mammals[d]		NA	NA	NA	0.0013
$^{13}C_{12}$ -PRCs[e]					
^{37}Cl 2,3,7,8-TCDD	85508-50-5	NA	TBD	TBD	TBD
^{13}C 1,2,3,4-TCDF		NA	TBD	TBD	TBD
^{13}C 2,3,4,7,8-PeCDF	116843-02-8	NA	TBD	TBD	TBD

Notes:

CAS = Chemical Abstracts Service
HRGC = high-resolution gas chromatography
HRMS = high-resolution mass spectrometry
NA = not applicable
PDMS = polydimethylsiloxane
PeCDF = pentachlorinated dibenzofuran
PRC = performance reference compound
TBD = to be determined
TCDD = tetrachlorodibenzo-*p* -dioxin
TCDF = tetrachlorodibenzofuran
TEF = toxicity equivalence factor
TEQ = toxic equivalent

[a] The required minimum mass of the target compound to be detected by HRGC/HRMS (in picograms).

[b] The minimum mass of the target compound can be detected by HRGC/HRMS reported by the analytical laboratory (in picograms).

[c] The detection limit of the target compound in porewater, estimated using PDMS fiber-water partition coefficient, PDMS fiber length, PDMS fiber unit volume, and a correction factor based on the fraction of equilibrium achieved as below:

$$C_w = \frac{M_{det}}{K_{fw} L_f V f_e}$$

Where:

C_w = Concentration of the target compound in porewater (pg/L)

Table 1

Analytes, Analytical Concentration Goals , Method Reporting Limits, and Estimated Detection Limits for Groundwater Samples

M_{det} = Equipment detection limit (pg)

K_{fw} = Fiber/water partition coefficient (L/L); based on Hsieh et al. (2011) (see Table 1 in Cap Porewater SAP Addendum)

L_f = Length of fiber (m); 1.52 m for the PDMS used in the study

V = PDMS fiber unit volume (L/m); 113.8 uL/m for the PDMS used in the study

f_e = Fraction of equilibrium achieved (-); assumed equilibrium (f_e = 1.0)

[d] TEQs are calculated using World Health Organization 2005 TEFs for the three congeners (Van den Berg et al. 2006)

[e] Detection limits for PRCs are expected to be about the same as for the target compounds.

Table 2
Proposed Laboratory Methods for Samples

Matrix	Parameter	Laboratory	Sample Preparation		Quantitative Analysis	
			Protocol	Procedure	Protocol	Procedure
Groundwater	**Organics**					
	2,3,7,8-TCDD, 2,3,7,8-TCDF, and 2,3,4,7,8-PeCDF	TBD	ER-0624	Solvent extraction	USEPA 1613B	HRGC/HRMS
			USEPA 1613B	Solvent concentration		
			USEPA 1613B	Extract cleanup as needed		
	Performance Reference Compounds (PRCs)		ER-0624	Solvent extraction		

Notes:
HRGC = high-resolution gas chromatography
HRMS = high-resolution mass spectrometry

FIGURES

AERIAL SOURCE: Bing, 2015.
HORIZONTAL DATUM: Texas State Plane South Central, NAD83, U.S. Feet.
VERTICAL DATUM: North American Vertical Datum of 1988 (NAVD88).

LEGEND:

Northern Impoundments:

1966 North Impoundments Perimeter

0 200
Scale in Feet

m:\CAD\Projects\0557-mcginnes industrial maintenance corp\superfund site rifs and tcra\0557-RP-000.dwg F1a - MIMC

Mar 16, 2016 2:37pm dholmer

ANCHOR QEA

Figure 1a
Site and Vicinty Map
SJRWP Addendum 3 Groundwater SAP
SJRWP Superfund/MIMC and IPC

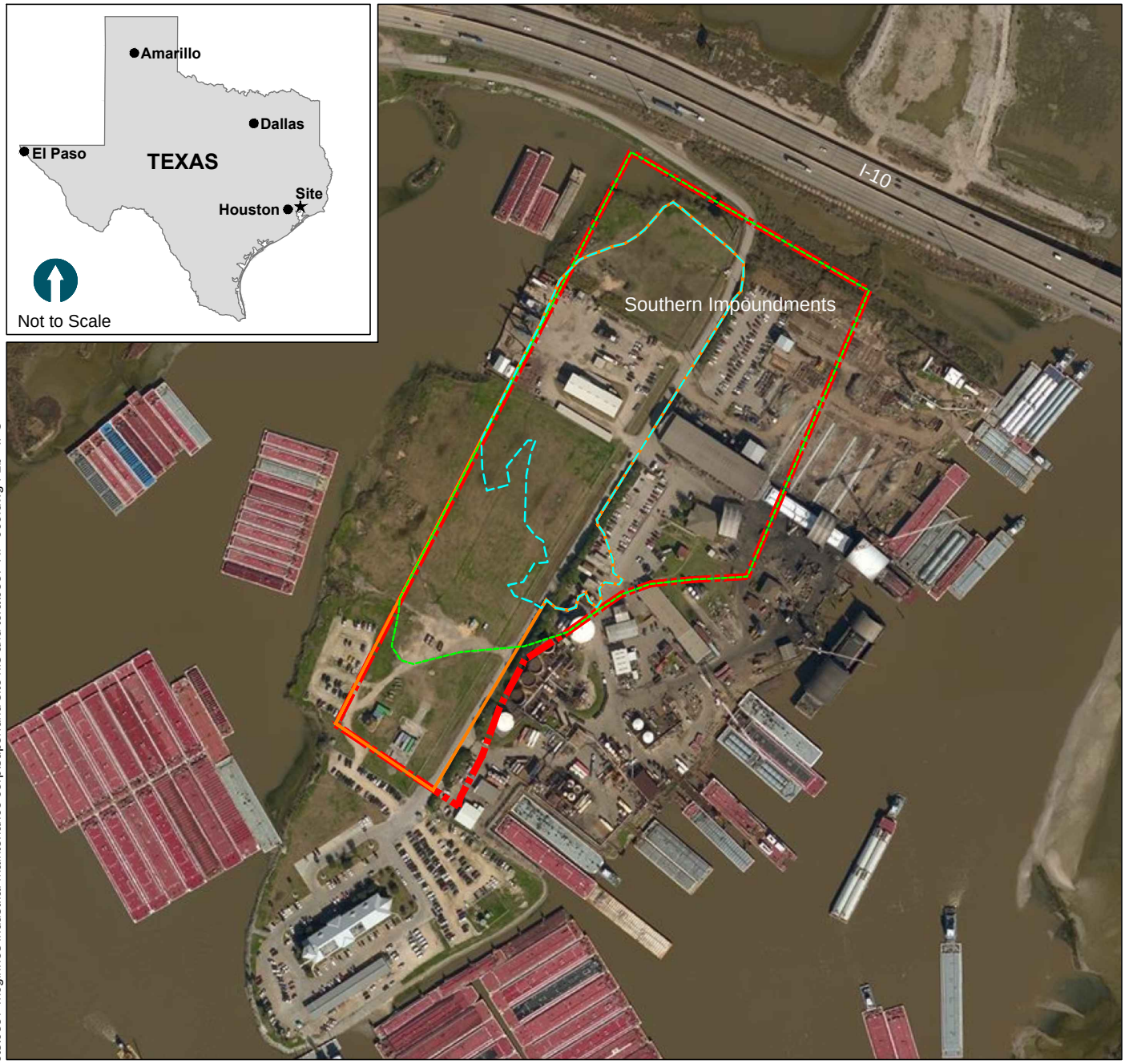

AERIAL SOURCE: Bing, 2015.
HORIZONTAL DATUM: Texas State Plane South Central, NAD83, U.S. Feet.
VERTICAL DATUM: North American Vertical Datum of 1988 (NAVD88).

LEGEND:

Southern Impoundments:

- Texas State Department of Health (Hand Drawn)
- 1966 Texas State Department of Health (Hand Drawn)
- 1966 USGS (from Aerial Image)
- 1966 Flooded Area (from Aerial Image)

0 400
Scale in Feet

m:\CAD\Projects\0557-mcginnes industrial maintenance corp\superfund site rifs and tcra\0557-RP-000.dwg F1b - IPC

Mar 16, 2016 2:37pm dholmer

ANCHOR QEA

Figure 1b
Site and Vicinty Map
SJRWP Addendum 3 Groundwater SAP
SJRWP Superfund/IPC

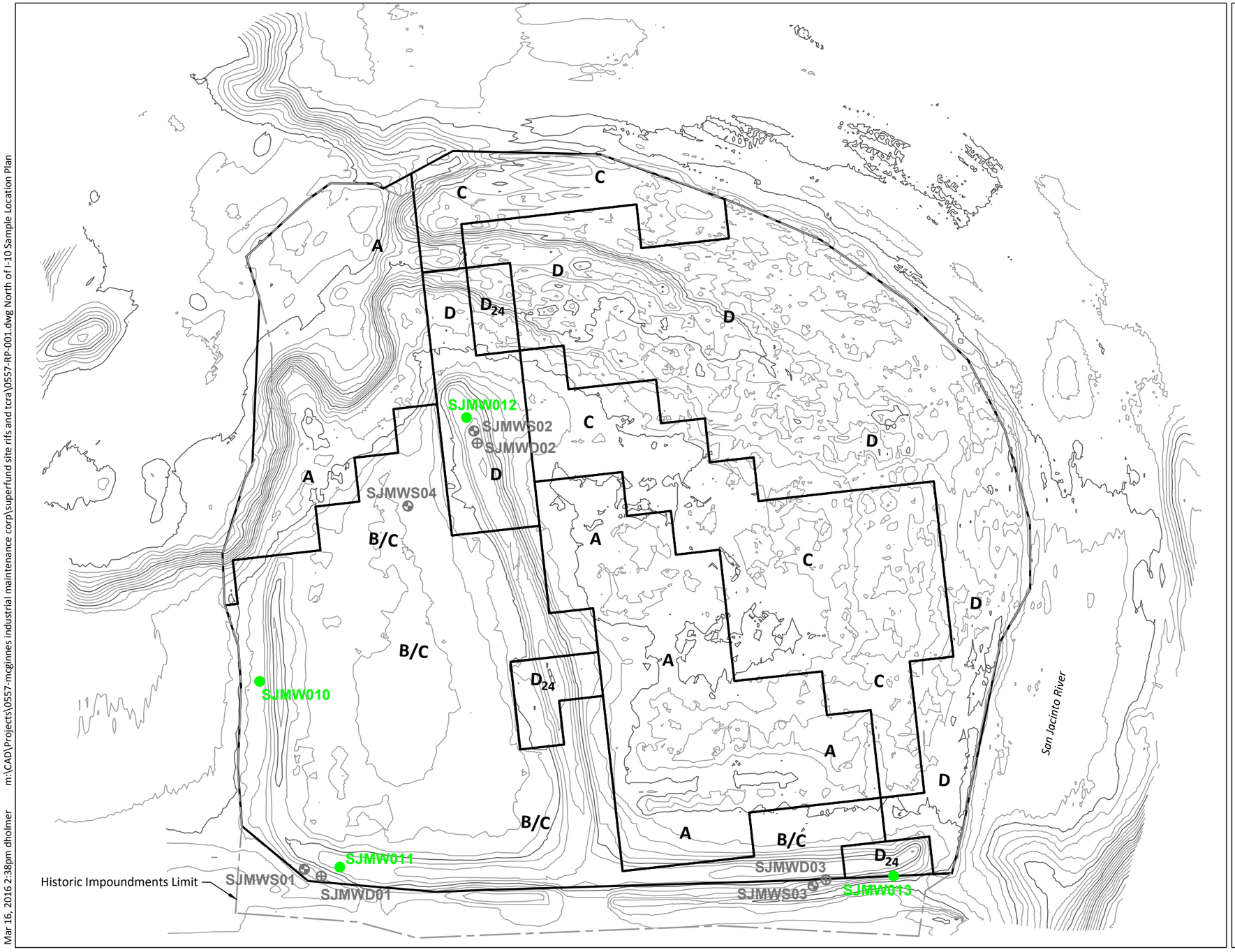

LEGEND:

- July 2015 Bathymetric and Topographic Contours (1 Foot Interval)
- B/C — Armored Cap Type and Boundary
- Historic Impoundments Limit
- SJMW0010 — Well Location and Designation
- SJMWS01, SJMWD01 — Removed/Abandoned Well Locations

Proposed Well Coordinates		
Designation	Easting	Northing
SJMW010	3,216,704	13,857,570
SJMW011	3,216,692	13,857,341
SJMW012	3,217,047	13,857,734
SJMW013	3,217,250	13,857,052

SOURCE: Drawing prepared from survey provided by Hydrographic Consultants dated July 2015.
HORIZONTAL DATUM: Texas State Plane South Central, NAD83, U.S. Feet.
VERTICAL DATUM: NAVD 88.

0 120
Scale in Feet

Mar 16, 2016 2:38pm dholmer m:\CAD\Projects\0557-mcginnes industrial maintenance corp\superfund site rifs and tcra\0557-RP-001.dwg North of I-10 Sample Location Plan

ANCHOR QEA

Figure 2
Well Locations North of I-10
SJRWP Addendum 3 Groundwater SAP
SJRWP Superfund/MIMC and IPC

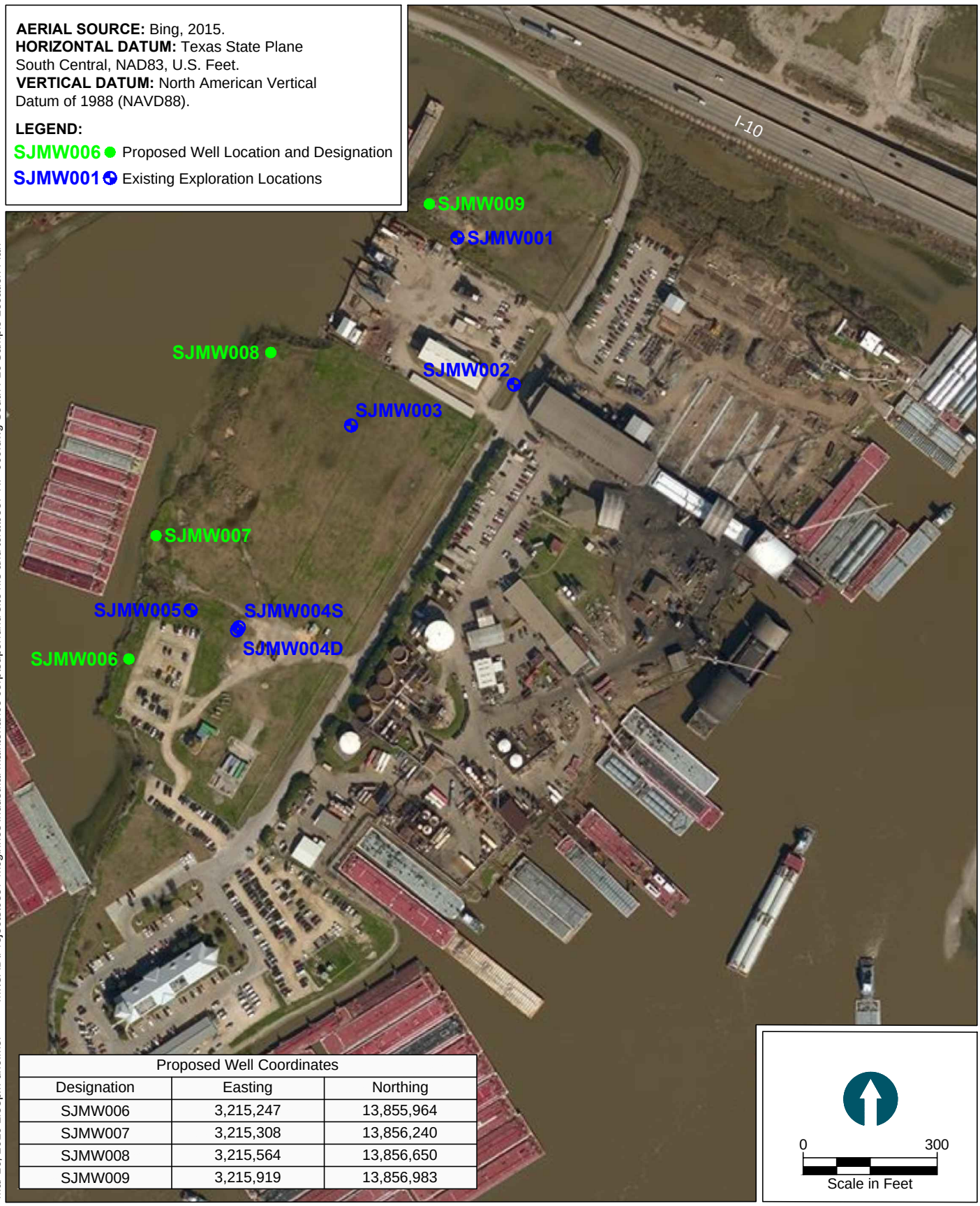

Proposed Well Coordinates		
Designation	Easting	Northing
SJMW006	3,215,247	13,855,964
SJMW007	3,215,308	13,856,240
SJMW008	3,215,564	13,856,650
SJMW009	3,215,919	13,856,983

m:\CAD\Projects\0557-mcginnes industrial maintenance corp\superfund site rifs and tcra\0557-RP-000.dwg South I-10 Sample Location Plan

Mar 16, 2016 2:38pm dholmer

Figure 3
Proposed and Existing Well Locations South of I-10
SJRWP Addendum 3 Groundwater SAP
SJRWP Superfund/IPC

ANCHOR QEA

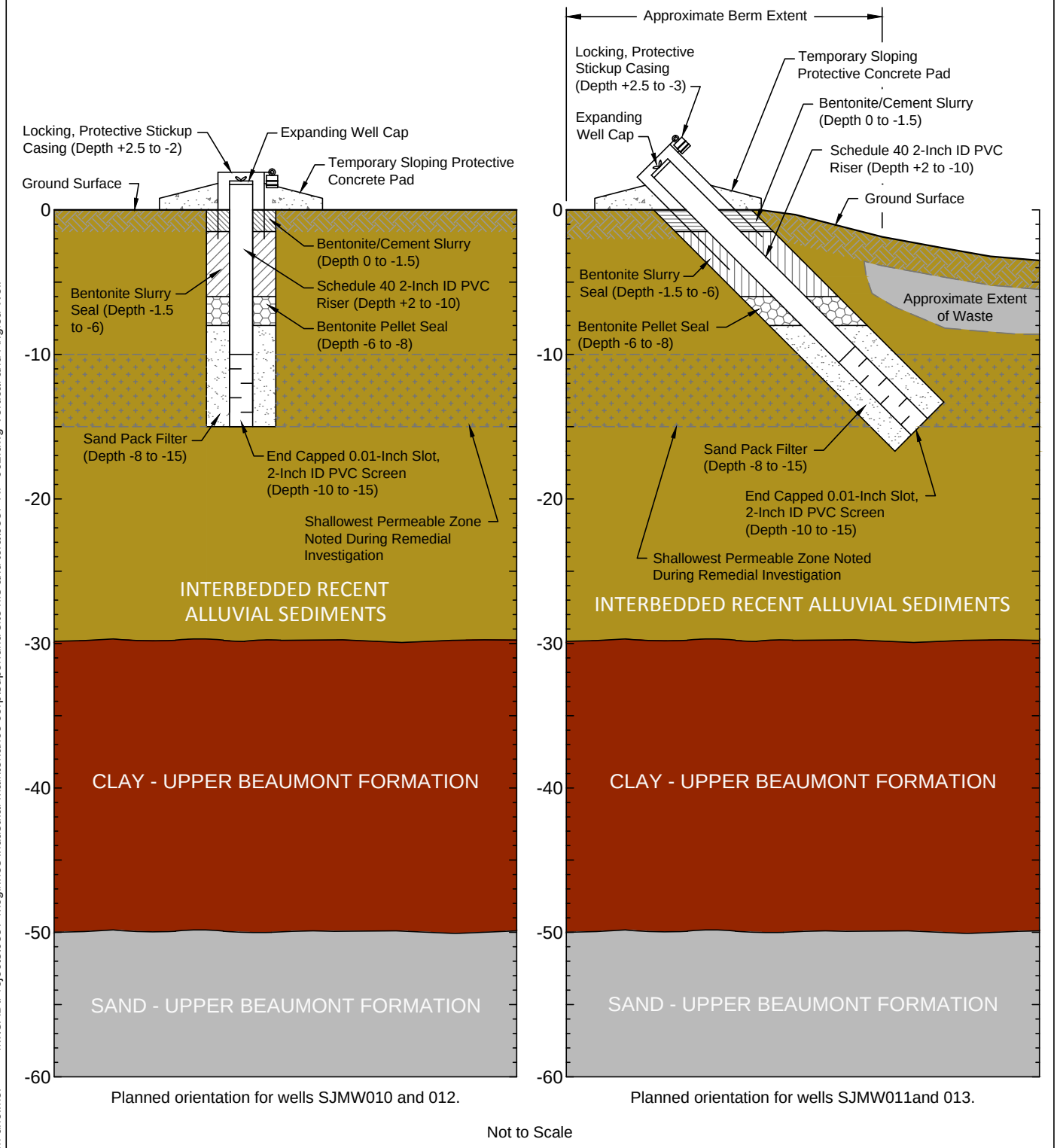

NOTES:

1. Stratigraphy is approximate.
2. Specific well construction details to be confirmed in the field.

m:\CAD\Projects\0557-mcginnes industrial maintenance corp\superfund site rifs and tcra\0557-RP-002.dwg Vertical and Angled Well

Mar 16, 2016 2:38pm dholmer

Figure 4

Typical Vertical and Angled Well Construction Details
SJRWP Addendum 3 Groundwater SAP
SJRWP Superfund/MIMC and IPC

ANCHOR QEA

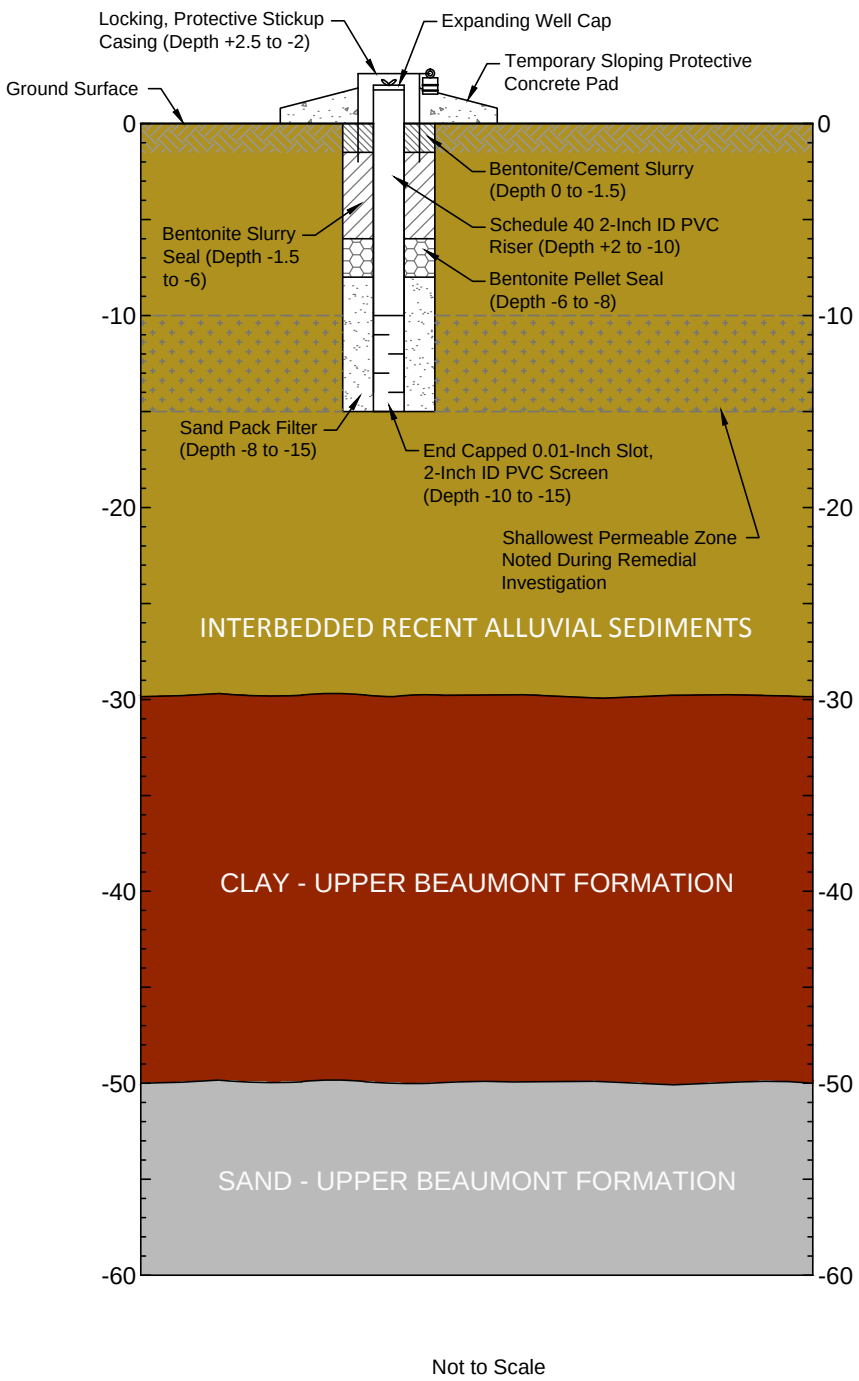

NOTES:

1. Stratigraphy is approximate.
2. Specific well construction details to be confirmed in the field.
3. Planned orientation for wells SJMW006, 007, 008 and 009.

m:\CAD\Projects\0557-mcginnes industrial maintenance corp\superfund site rifs and tcra\0557-RP-002.dwg Vertical Well
Mar 16, 2016 2:38pm dholmer

Figure 5
Typical Vertical Well Construction Detail
SJRWP Addendum 3 Groundwater SAP
SJRWP Superfund/IPC

APPENDIX A
FIELD SAMPLING PLAN

TABLE OF CONTENTS

1 INTRODUCTION 1
1.1 General Description 2
1.2 Project Organization 2
1.3 Laboratories 4
1.4 Document Organization 5
2 SAMPLING PROCEDURES 6
2.1 Schedule 6
2.2 Field Survey and Sampling Methods 6
2.2.1 Sonic Drilling Rig, Field Equipment, and Supplies 7
2.2.1.1 Drilling Rig 7
2.2.1.2 Field Equipment and Supplies 7
2.2.2 Sample Location Positioning 8
2.2.3 Borehole Advancement and Soil Sample Collection 9
2.2.4 Monitoring Well Installation: North of I-10 9
2.2.5 Monitoring Well Installation: South of I-10 10
2.2.6 Monitoring Well Development: North of I-10 11
2.2.7 Monitoring Well Development and Redevelopment: South of I-10 12
2.2.8 Monitoring Well Sampling 13
2.2.9 Water Level Monitoring 13
2.2.10 Equipment Decontamination 13
2.3 Field Quality Control Samples 14
2.4 Sample Handling, Packaging, Transport, and Custody 14
2.5 Investigation Derived Wastes 15
3 FIELD DOCUMENTATION 16
3.1 Field Log Book 16
3.2 Boring Logs 18
3.3 Well Development/Redevelopment and Groundwater Sampling Logs 19
3.4 Chain-of-Custody Procedures 19
3.5 Station Numbering 21
3.6 Sample Identifiers 21

4 FIELD DATA MANAGEMENT AND REPORTING PROCEDURES.....23

5 REFERENCES 24

List of Tables

Table A-1 Sample Collection Matrix

Table A-2 Sample Containers, Preservation, and Holding Time Requirements

List of Figures

Figure A-1a Site and Vicinity Map – MIMC and IPC

Figure A-1b Site and Vicinity Map - IPC

Figure A-2 Well Locations North of I-10

Figure A-3 Proposed and Existing Well Locations South of I-10

Figure A-4 Conceptual SPME Sampling Apparatus for Groundwater Wells

List of Attachments

Attachment A-1 Standard Operating Procedures

Attachment A-2 Field Forms

LIST OF ACRONYMS AND ABBREVIATIONS

CFR	Code of Federal Regulations
COC	chain-of-custody
DGPS	differential GPS
FL	Field Lead
FSP	Field Sampling Plan
HASP	Health and Safety Plan
I-10	Interstate Highway 10
IPC	International Paper Company
IDW	investigation derived waste
Integral	Integral Consulting Inc.
MIMC	McGinnes Industrial Maintenance Corporation
NAVD88	North American Vertical Datum of 1988
OD	outside dimension
PPE	personal protection equipment
QA	quality assurance
QC	quality control
Respondents	International Paper Company and McGinnes Industrial Maintenance Corporation
SAP	Addendum 3 Groundwater Study Sampling and Analysis Plan
Site	San Jacinto River Waste Pits Superfund Site
SOP	standard operating procedure
SPME	solid-phase microextraction
TCRA	Time Critical Removal Action
USEPA	U.S. Environmental Protection Agency

1 INTRODUCTION

This Field Sampling Plan (FSP) was prepared on behalf of International Paper Company (IPC) and McGinnes Industrial Maintenance Corporation (MIMC) (collectively referred to as the Respondents) for additional groundwater-related sampling activities at the San Jacinto River Waste Pits Superfund site (Site)[1] (Figures A-1a and A-1b). This FSP was prepared consistent with U.S. Environmental Protection Agency (USEPA) guidance (USEPA 1988, 1992), and in accordance with requirements contained in the 2009 Unilateral Administrative Order (USEPA 2009a). This FSP supports and is appended to the Addendum 3 Groundwater Study Sampling and Analysis Plan (SAP). Additional information on the Site history, setting, and a summary of existing data have been provided in the Quality Assurance Project Plan (Anchor QEA 2011) and in previous reports (Remedial Investigation/Feasibility Study Work Plan; Anchor QEA and Integral 2010).

Pursuant to recent discussions with USEPA (USEPA 2015), and as described in the SAP, the primary objectives of the work presented in this FSP are to:

- North of I-10:
  - Verify the effectiveness, with regard to preventing dioxin/furan releases to groundwater, of the armored cap installed as part of the Time Critical Removal Action (TCRA) completed in August 2011.
- South of I-10
  - Verify that existing conditions are effectively containing dioxin/furan releases via shallow groundwater to surface water and to deep groundwater.

Secondary objectives include:

- Obtain hydrologic data describing potential groundwater/surface water interactions.
- Further characterize and verify Site subsurface conditions.

[1] As set forth in letters submitted by the Respondents to USEPA dated July 20, 2011, activities north of I-10 (i.e., the northern impoundments) are conducted by MIMC and IPC and activities south of I-10 (i.e., the southern impoundment) are conducted by IPC. This document is organized accordingly, with aspects unique to either area presented separately and combined presentation of aspects common to both areas.

1.1 General Description

The current groundwater study work scope is summarized as follows:

- North of I-10
  - Installation, development, and sampling of four monitoring wells:
    - Two wells will be angled from outside the armored cap to monitor the shallowest permeable zone beneath the waste.
    - Two wells will be installed vertically (one west of the impoundments and one at the north end of the central berm) to monitor the shallowest permeable zone beneath the armored cap.
  - Wells will be sampled using passive samplers (solid-phase microextraction [SPMEs]) to measure dissolved TCDD, TCDF, and 2,3,4,7,8-PentaCDF.
- South of I-10
  - Installation, development, and sampling of four vertical monitoring wells along the western edge of the peninsula
  - Redevelopment and sampling of six existing monitoring wells
  - Wells will be sampled using passive samplers (solid-phase microextraction [SPMEs]) to measure dissolved TCDD, TCDF, and 2,3,4,7,8-PentaCDF
- Applicable Scope to Both North and South of I-10
  - Hydrogeologic data collection from newly installed and existing monitoring wells prior to SPME deployment and prior to SPME retrieval
  - Data evaluation, synthesis, and reporting
  - Monitoring well abandonment immediately following sampling, and upon USEPA approval, consistent with Texas guidance (State of Texas 2010a)

1.2 Project Organization

MIMC and IPC have retained Anchor QEA, LLC, and Integral Consulting Inc. (Integral) to perform the FSP and provide database administration and analytical laboratory coordination. The primary contacts for each organization and USEPA are provided below.

Primary Contacts by Organization

Title	Name	Contact Information
USEPA	Gary Miller	U.S. Environmental Protection Agency Region 6 1445 Ross Avenue Dallas, TX 75202-2773 (214) 665-8318 millergaryg@epa.gov
McGinnes Industrial Maintenance Corporation Project Manager	David Moreira	McGinnes Industrial Maintenance Corporation 4 Liberty Lane West Hampton, NH 03842 (603) 929-5446 dmoreira@wm.com
International Paper Company Project Manager	Philip Slowiak	International Paper Company 6400 Poplar Avenue Memphis, TN 38197-0001 (901) 419-3845 philip.slowiak@ipaper.com

The names and quality assurance (QA) responsibilities of key project personnel for Anchor QEA and Integral are provided below.

FSP Personnel Quality Assurance Responsibilities

Title	Responsibility	Name	Contact Information
Project Coordinator	Coordination of project information and related communications on behalf of IPC and MIMC	David Keith	Anchor QEA, LLC 614 Magnolia Avenue Ocean Springs, MS 39564 (228) 818-9626 dkeith@anchorqea.com
Corporate Health and Safety Manager Anchor QEA	Oversight of health and safety program for field tasks associated with RI/FS	David Templeton	Anchor QEA, LLC 720 Olive Way, Suite 1900 Seattle, WA 98101 (206) 287-9130 dtempleton@anchorqea.com
Field Lead Anchor QEA	Field data collection and implementation of the Health and Safety Plan in the field	Chris Torell	Anchor QEA, LLC 290 Elwood Davis Road Liverpool, NY 13088 (315) 453 9009 ctorell@anchorqea.com

Title	Responsibility	Name	Contact Information
Project Database Administrator Integral	Database development and data management	Dreas Nielson	Integral Consulting Inc. 719 2nd Avenue, Suite 700 Seattle, WA 98104 (206) 957-0351 dnielson@integral-corp.com
Project Laboratory QA Coordinator Integral	Completeness of QA documentation and procedures	Craig Hutchings	Integral Consulting Inc. 1205 West Bay Drive NW Olympia, WA 98502 (360) 705-3534 chutchings@integral-corp.com

1.3 Laboratories

The following responsibilities apply to the project manager and QA manager at the analytical laboratories used for this study.

The laboratory project manager is responsible for the successful and timely completion of sample analyses and performing the following tasks:

- Ensure samples are received and logged in correctly, ensure correct methods and modifications are used, and ensure data are reported within specified turnaround times.
- Review analytical data to ensure procedures were followed as required in the FSP, the cited methods, and laboratory standard operating procedures (SOPs).
- Keep the task QA coordinator apprised of the schedule and status of sample analyses and data package preparation.
- Notify the task QA coordinator if problems occur in sample receiving, analysis, or scheduling, or if control limits cannot be met.
- Take appropriate corrective action as necessary.
- Report data and supporting QA information as specified in this FSP.

The laboratory QA manager is responsible for overseeing the QA activities in the laboratory and ensuring the quality of the data for this project. The laboratory QA manager will be responsible for the following actions:

- Oversee and implement the laboratory's QA program.
- Maintain QA records for each laboratory production unit.

- Ensure QA and quality control (QC) procedures are implemented as required for each method.
- Provide oversight of QA/QC practices and procedures.
- Review and address or approve nonconformity and corrective action reports.
- Coordinate response to any QC issues that affect this project with the laboratory project manager.

1.4 Document Organization

This FSP describes the project organization and field methods that will be used to conduct the groundwater investigation. In conjunction with the SAP, the procedures in Sections 2 through 4 of this FSP will guide the field staff during completion of the investigation tasks. Section 2 of this FSP describes the monitoring well installation and sampling procedures. Section 3 summarizes field documentation and chain-of-custody (COC) procedures. Field data reporting and sample COC procedures are discussed in Section 4.

The following documents are provided as attachments to this FSP:

- Standard Operating Procedures (SOPs) – The SOPs are provided in Attachment A-1. These include the SOPs developed by Integral for equipment decontamination, sample handling, and COC. Anchor QEA will use the Integral procedures during the groundwater investigation to be consistent with the procedures used during previous groundwater investigations, previous sediment and soil investigations, ASTM International's soil logging standards, and sonic drilling methodologies.
- Field Forms – Attachment A-2 contains examples of various forms that will be used during field sampling.

2 SAMPLING PROCEDURES

The following sections describe the detailed procedures and methods that will be used during the 2016 groundwater study, including sampling procedures, recordkeeping, sample handling, storage, and field QC procedures. Procedures for tasks to be conducted by subcontractors (i.e., drilling contractor) are also included. All field activities will be conducted in accordance with the Health and Safety Plan (HASP; Anchor QEA 2011).

Table A-1 summarizes the monitoring well borings in terms of placement, depth, and target analytes. The total boring depths shown in Table A-1 are estimated based on local subsurface and TCRA cap as-built information, and may change slightly based on the geology encountered in the field at each boring location. Soil samples collected during boring advancement will provide lithologic data required to determine the depth of the monitoring well screened interval and other well construction details.

2.1 Schedule

The start date for the groundwater study will be determined following USEPA approval of the SAP and obtaining access agreement(s) as needed. However, for planning purposes, and consistent with recent discussions with USEPA, it is anticipated that the field activities will begin in January 2016. Ideally, the field implementation, including well abandonment, will be completed in 2016.

2.2 Field Survey and Sampling Methods

As summarized above, the groundwater study consists of advancement of soil borings, collection of soil samples for lithologic logging, and installation and monitoring of eight monitoring wells. Samples to be collected during field efforts are summarized in Table A-1. Figures A-2 and A-3 depict the monitoring well locations. In addition to the samples shown in Table A-1, groundwater information will be collected during monitoring well development and sampling. The following sections describe the sampling equipment, sampling methods, sample handling, and shipping.

2.2.1 Sonic Drilling Rig, Field Equipment, and Supplies

Advancement of soil borings and installation of monitoring wells will be accomplished using a sonic drilling rig, supported by an Anchor QEA field geologist equipped to log and collect soil samples. Wells will be developed, purged, and sampled by an Anchor QEA field crew. Following sampling efforts, the monitoring wells will be abandoned in accordance with applicable Texas regulation (State of Texas 2010a). It is anticipated that access to the drilling locations will require a tracked, all-terrain drilling rig.

2.2.1.1 Drilling Rig

Soil sampling and well installation will be facilitated using a sonic drilling rig and attendant tools, equipment, and supplies. Typical sonic rigs are wheeled or mounted on tracked, self-propelled vehicles. Due to Site ground conditions, a track-mounted rig will likely be used.

A typical sonic rig is equipped with a hydraulic system and mechanical framework specifically engineered to drive and retrieve tools (e.g., rods, samplers, and casings) by either static force or vibration-augmented static force. All sampling equipment, well materials, consumables, tools, and other support equipment will be stored on the drilling rig, to enable efficient sampling and well installation.

Sonic drilling methods are widely accepted throughout the United States for soil and groundwater sampling and are standardized by ASTM D6914-04. Specific drilling operations will be conducted consistent with this method (Attachment A-1), the selected drilling contractor's internal means and methods, and generally accepted industry methods.

2.2.1.2 Field Equipment and Supplies

Field equipment and supplies include sampling equipment, utensils, decontamination supplies, sample containers, SPME-related equipment and supplies, coolers, shipping containers, field log books and forms, personal protection equipment (PPE), and personal gear. In support of well development efforts, clean tubing, pumps, and a water quality monitor with a flow-through cell will be used. All groundwater sampling SPME equipment will be new and will not be reused. PPE will be required to minimize the potential for

unacceptable exposure to dioxins/furans and the possibility of cross-contamination of samples during all sampling activities. Additional information on protective wear required for this project is provided in the HASP.

SPME-related supplies and equipment, distilled/deionized water, coolers, and packaging material for the samples will be supplied by the analytical laboratory. Details on the numbers and type of sampling tools are provided in the SAP and in Table A-2 of this FSP. The Field Lead (FL) and field personnel in charge of sample handling in the field will use a sample matrix table (Table A-1) as a QC check to ensure all samples have been collected at a given station. This table includes the total number and type of sample tools required for each analysis at each sampling station.

Sample containers will be clearly labeled at the time of sampling. Labels will include the task name, sample location and number, sampler's initials, analyses to be performed, and sample date and time. Sample numbering and identification procedures are described in detail in Sections 3.5 and 3.6.

2.2.2 Sample Location Positioning

Sample location positioning will be accomplished a using hand-held GPS to locate the approximate sampling location, followed by a post-work survey using a digital GPS (DGPS) or standard survey techniques.

Accuracy for pre-work positioning will be plus or minus 10 feet horizontal. Anticipated sampling location coordinates are provided in Table 3 of the SAP. If field conditions permit, actual sample locations should fall within a 10-foot radius of the planned positions. Hand-held GPS operation will follow the unit's instructions.

The post-work survey (e.g., sample locations and well riser elevations) will have a requisite accuracy of plus or minus 0.1 foot horizontal and plus or minus 0.01 foot vertical. The standard projection method to be used during field activities is Horizontal Datum: North American Datum 1983, State Plane, Texas South Central, FIPS 4204, U.S. feet. All post-work survey activities will be conducted by a Texas-licensed professional surveyor using TAC

procedures, and relative to the Harris County Subsidence District benchmark HGCSD 33 (26.57 feet North American Vertical Datum of 1988 [NAVD88] – TSARP) previously used at the Site.

2.2.3 Borehole Advancement and Soil Sample Collection

Soil borings will be advanced at each well location using sonic techniques. The tooling size used will be 4 by 6 tooling: a 4.5-inch outside diameter (OD) core barrel overridden by a 6-inch OD casing. Soil samples will be collected continuously in each boring. The soil sample collection method is provided in Attachment A-1, which describes continuous, dual tube, sonic core barrel soil sampling.

The field geologist will log each core in accordance with ASTM D2488 *Standard Practice for Description and Identification of Soils (Visual-Manual Procedure)*. As stated previously, soil samples will be collected solely for lithologic information to identify the shallowest permeable zone and to allow for appropriate screen placement and well construction. All soil sample material will be containerized for appropriate offsite disposal.

2.2.4 Monitoring Well Installation: North of I-10

Upon completion of each boring, 2-inch monitoring wells will be installed in the borehole through the existing downhole tooling. Wells will be installed using methods consistent with ASTM D5092 *Standard Practice for Design and Installation of Groundwater Monitoring Wells* and the approach used during previous well installations for RI activities.

Each well will be screened with 5-foot-long screens intersecting the top 5 feet of the shallowest permeable zone at each drilling location. If the shallowest permeable zone is less than 5 feet in depth, the top of the well screen will be placed from the top of the permeable zone. For angled wells, trigonometric functions will be used to calculate dimensions and depths, as well as construction details, to allow similar screen placement as in vertical wells. Based on previous RI activities, the shallowest permeable zone is located at approximately -10 feet NAVD88. Typical well construction details for vertical and angled wells are shown in Figure 4 in the SAP.

Monitoring wells will be constructed of 2-inch inside diameter, flush threaded, Schedule 40 PVC riser and 2-inch inside diameter well screens. Each well screen will consist of a 5-foot-long, 0.01-inch slotted screen, unless field conditions dictate otherwise. A sandpack of appropriate grain size will be placed in the annulus to approximately 1 foot above the top of the screen. A bentonite slurry will be tremied into the well annulus above the sandpack to within approximately 1.5 feet of grade. The remainder of the annulus will be filled with a mix of bentonite and cement to allow placement of the protective well cover. During these well construction procedures, drill rods will be removed as materials (e.g., sand and bentonite slurry) are placed into the annulus. Each well will be finished with a well cover and concrete pad and protected from damage by perimeter bollards, as needed, until abandonment.

Well construction details, consisting of materials, material length and thickness, and approximate depth below grade, will be recorded in the field log book and transferred to well construction forms.

2.2.5 Monitoring Well Installation: South of I-10

Upon completion of each boring, 2-inch monitoring wells will be installed in the borehole through the existing downhole tooling. Wells will be installed using methods consistent with ASTM D5092 *Standard Practice for Design and Installation of Groundwater Monitoring Wells* and the approach used during previous well installations during the RI activities.

Each well will be screened with 5-foot-long screens intersecting the top 5 feet of the shallowest permeable zone at each drilling location. If the shallowest permeable zone is less than 5 feet in depth, the top of the well screen will be placed from the top of the permeable zone. Based on previous RI activities, the shallowest permeable zone is located at approximately -10 feet NAVD88. Typical well construction details for vertical wells are shown in Figure 5 in the SAP.

Monitoring wells will be constructed of 2-inch inside diameter, flush threaded, Schedule 40 PVC riser and 2-inch inside diameter well screens. Each well screen will consist of a 5-foot-long, 0.01-inch slotted screen, unless field conditions dictate otherwise. A sandpack of

appropriate grain size will be placed in the annulus to approximately 1 foot above the top of the screen. A bentonite slurry will be tremied into the well annulus above the sandpack to within approximately 1.5 feet of grade. The remainder of the annulus will be filled with a mix of bentonite and cement to allow placement of the protective well cover. During these well construction procedures, drill rods will be removed as materials (e.g., sand and bentonite slurry) are placed into the annulus. Each well will be finished with a well cover and concrete pad and protected from damage by perimeter bollards, as needed, until abandonment.

Well construction details, consisting of materials, material length and thickness, and approximate depth below grade, will be recorded in the field log book and transferred to well construction forms.

2.2.6 Monitoring Well Development: North of I-10

Monitoring wells will be developed consistent with USEPA's *Low Stress (low flow) Purging and Sampling Procedure for the collection of Groundwater Samples from Monitoring Wells* (USEPA 1996) and applicable Texas Commission on Environmental Quality guidance following installation, and after an appropriate time period for the well seal and grout to cure (minimum 24 hours). Well development will be conducted to restore original subsurface conditions around the screened interval, to the extent practicable, and facilitate collection of representative groundwater samples.

Development will be accomplished using a peristaltic pump and clean tubing assembly. After well materials have cured, the water level in the well will be calculated to determine well volume (amount of water inside the well screen and riser). The length of screened interval below ground surface will be determined based on the boring log. The tubing assembly will be placed in the well with the intake of the tubing approximately in the middle of the screened interval. The outflow end of the tubing will be connected to a water quality meter with a flow-through monitoring cell.

Development will be conducted until conventional parameters meet target values, per guidance. Field parameters (e.g., turbidity, dissolved oxygen, specific conductance,

temperature, pH, and oxidation/reduction potential) will be measured every 3 to 5 minutes using the water quality meter. The goal of development will be to stabilize these water quality parameters to plus or minus 10% between readings, indicating representative groundwater is being drawn into the well. Well development should continue until the turbidity levels are as low as reasonably feasible and continued development does not result in significant reduction in turbidity. All development water will be containerized for off-site disposal.

2.2.7 Monitoring Well Development and Redevelopment: South of I-10

Monitoring wells will be developed consistent with USEPA's *Low Stress (low flow) Purging and Sampling Procedure for the collection of Groundwater Samples from Monitoring Wells* (USEPA 1996) and applicable Texas Commission on Environmental Quality guidance following installation, and after an appropriate time period for the well seal and grout to cure (minimum 24 hours). Well development will be conducted, to restore original subsurface conditions around the screened interval, to the extent practicable, redevelop existing wells that have been unused since previous sampling in 2013, and facilitate collection of representative groundwater samples.

Development will be accomplished using a peristaltic pump and clean tubing assembly. After well materials have cured, the water level in the well will be calculated to determine well volume (amount of water inside the well screen and riser). The length of screened interval below ground surface will be determined based on the boring log. The tubing assembly will be placed in the well with the intake of the tubing approximately in the middle of the screened interval. The outflow end of the tubing will be connected to a water quality meter with a flow-through monitoring cell.

Development will be conducted until conventional parameters meet target values, per guidance. Field parameters (e.g., turbidity, dissolved oxygen, specific conductance, temperature, pH, and oxidation/reduction potential) will be measured every 3 to 5 minutes using the water quality meter. The goal of development will be to stabilize these water quality parameters to plus or minus 10% between readings, indicating representative groundwater is being drawn into the well. Well development should continue until the

turbidity levels are as low as reasonably feasible and continued development does not result in significant reduction in turbidity. All development water will be containerized for offsite disposal.

2.2.8 Monitoring Well Sampling

Monitoring wells will be sampled using passive samplers SPMEs to measure dissolved TCDD, TCDF, and 2,3,4,7,8-PentaCDF in groundwater following development activities.

Sampling will be conducted using methods consistent with Mayer et al. 2000, Fernandez et al. 2009, and Lu et al. 2011, and at the detection limits shown in Table 1 in the SAP. The SPME sampling apparatus and SPME fibers will each be 2.5 feet long and deployed in series, to result in a 5-foot-long combined sampling unit, designed to span the length of screens in the newly installed wells, and to be centered in the middle of existing well screens, which range between approximately 5 and 15 feet in length. After development activities, the SPME sampling apparatus will be installed in each well, centered in the screened section, and allowed to equilibrate for approximately 60 days. Figure A-4 provides a conceptual diagram of the anticipated SPME samplers. Attachment A-1 to this FSP discusses the SPME sampling and analysis approach in detail.

2.2.9 Water Level Monitoring

Synoptic water-level data will be collected prior to and following deployment of SPME samplers using a standard, electronic water-level probe. Care will be taken to determine if static water levels are present in the well at the time of monitoring. This will be accomplished by monitoring wells after a period of approximately 24 hours following completion of any activity involving water removal, to ensure static conditions exist.

Water-level monitoring will be conducted consistent with Water Level Measurement; SOP No. 2043, (USEPA 1994).

2.2.10 Equipment Decontamination

Before sampling begins at a location, all reusable sampling equipment that will contact sampling media will be scrubbed with a standard detergent (e.g., Alconox® or Liquinox®),

rinsed with ethanol and hexane and air-dried. After cleaning, the decontaminated equipment will be covered with aluminum foil to protect it from possible contamination.

Dedicated sampling equipment and supplies (i.e., new SPME samplers and new core liners) will not require decontamination. However, such materials that have been subject to potential contamination through broken seals, damaged wrapping, or similar conditions will not be used and will be discarded.

Large equipment (i.e., drilling rods or core barrels) will be decontaminated using a steam cleaner or the decontamination wash procedure described above.

2.3 Field Quality Control Samples

Field QC samples will be used to assess sample variability and evaluate potential sources of contamination. The types of QC samples that will be collected are described in the SPME methodology provided in Attachment A-1. Detailed information on QA/QC procedures, limits, and reporting is provided in the SAP, and is consistent with previous investigations. The estimated number of field QC samples to be collected is listed in the sample matrix table (Table A-1). If QC problems are encountered, they will be brought to the attention of the QA coordinator. Corrective actions, if appropriate, will be implemented to meet the task's data quality indicators.

2.4 Sample Handling, Packaging, Transport, and Custody

Sample coolers and packing materials will be supplied by the analytical laboratories. For shipment with filled containers, individual sample containers will be labeled and placed into plastic bags and sealed. Samples will then be packed in a cooler lined with a large plastic bag. Containers will be packed to prevent breakage and separated in the cooler by bubble wrap or other shock-absorbent material. Water ice in sealed plastic bags will then be placed in the cooler to maintain a temperature of approximately 4° C plus or minus 2° C. When the cooler is full, the COC form will be placed into a zip-locked bag and taped to the inside lid of the cooler. A temperature blank will be added to each cooler. Each cooler will be sealed with two COC seals, one on the front and one on the side of the cooler. Labels indicating "This End Up" with an arrow and "Fragile" will be attached to each cooler.

The shipping containers will be clearly labeled (i.e., name of task, time and date container was sealed, person sealing the cooler, and company name and address) for positive identification. These packaging and shipping procedures are in accordance with U.S. Department of Transportation regulations (49 Code of Federal Regulations [CFR] 173.6 and 49 CFR 173.24). Coolers containing samples for chemical analyses will be transported to the laboratory by courier or overnight shipping service.

After the samples have been received by the laboratory, they will be stored under refrigeration 4° C plus or minus 2° C. Soil samples designated for archival will be stored frozen at –20° C (Table A-2).

2.5 Investigation Derived Wastes

Solid and liquid investigation derived waste (IDW) from well drilling, well purging, and well sampling procedures, will be containerized and temporarily stored onsite. The materials will then be characterized and properly disposed of offsite at a licensed disposal facility. IDW will be disposed by a waste management service that provides the following services:

- Proper waste identification, including full analytical capability
- Pick-up and disposal services
- Safe and proper transportation
- Environmentally sound treatment and disposal
- Regularly scheduled service visits with manifest and label preparation

All disposable materials used for sample collection and processing, such as paper towels and gloves, will be placed in heavyweight garbage bags or other appropriate containers. Disposable supplies that do not contain Site soils or water will be removed from the Site by sampling personnel and placed in a normal refuse container for disposal at a solid waste landfill.

3 FIELD DOCUMENTATION

The integrity of each sample from the time of collection to the point of data reporting must be maintained. Proper recordkeeping and COC procedures will allow samples to be traced from collection to final disposition. Representative photographs will be taken at each sampling location during drilling, well development, and sampling activities. Site photographs, taken from various angles and close-up views, of the overall conditions, will also be collected.

3.1 Field Log Book

Field activities and observations will be noted in a field log book. The field log book will be a bound document and may contain individual field and sample log forms (depending on the sampling activity). Information will include personnel, date, time, station designation, sampler, types of samples collected, and general observations. Changes that occur during sampling (e.g., personnel, responsibilities, or deviations from the FSP) and the reasons for these changes will be documented. The field log book will identify onsite visitors (if any) and the number of photographs taken at each sampling location. Each FL is responsible for ensuring their respective field log book and field data forms are correct. Requirements for field log book entries will include the following:

- Log books will be bound, with consecutively numbered pages.
- Removal of any pages, even if illegible, will be prohibited.
- Entries will be made legibly with black (or dark) waterproof ink.
- Unbiased, accurate language will be used.
- Entries will be made while activities are in progress or as soon afterward as possible (the date and time that the notation is made should be recorded, as well as the time of the observation itself).
- The consecutive day's first entry will be made on a new, blank page.
- The date and time, based on a 24-hour clock (e.g., 0900 a.m. for 9:00 a.m. and 2100 for 9:00 p.m.), should appear on each page.

In addition to the preceding requirements, the person recording the information must initial and date each page of the field log book. If more than one individual makes entries on the

same page, each recorder must initial and date each entry. The bottom of the page must be signed and dated by the individual who makes the last entry.

Field log book corrections will be made by drawing a single line through the original entry, allowing the original entry to be read. The corrected entry will be written alongside the original. Corrections will be initialed and dated and may require a footnote for explanation.

The following list includes the type of information that may be included in the field log book and/or field data forms:

- Task name, location, and number
- Task start date and end date
- A record of Site health and safety meetings, updates, and related monitoring
- Weather conditions
- Name of person making entries and other field staff
- Onsite visitors, if any
- Sampling vehicle
- Station name and location
- Date and collection time of each sample
- The sample number for each sample to be submitted for laboratory analysis
- The sampling location name, date, gear, and sampling location coordinates derived from GPS
- Specific information on each type of sampling activity
- The sample number, date and time of collection, equipment type, and the lot number for the box of filter papers used for field QC samples
- Observations made during sample collection, including weather conditions, complications, and other details associated with the sampling effort
- Sample description (source and appearance, such as soil type, color, presence of anthropogenic material, and presence and type of biological structures, other debris, oil sheens, and odor)
- Sampling intervals
- Visible debris near any of the sampling locations
- Surface vegetation that is removed from the sampling location prior to sampling

- The locations of surface water runoff or seeps that are located near the sampling stations
- The number of photographs taken at the sampling location
- Deviations from the FSP and reasons for deviation

In addition, a sampling location map will be updated during sampling and will be maintained throughout the sampling event. Log books must be completed at the time that any observations are made. Copies of field log books and forms will be retained by the technical team.

3.2 Boring Logs

The field geologist will record field conditions and sampling notes on a standard boring log/well construction diagram (Attachment A-2). Logs will include the following information:

- Date and time of collection of each sample interval
- Names of field personnel collecting and handling the samples
- Type of sampling equipment used (e.g., direct push)
- Observations made during sample collection, including weather conditions, complications, and other details associated with the sampling effort
- The sample station identification
- Length and depth intervals of each sample section and estimated recovery
- Qualitative notation of apparent resistance during driving
- Physical soil description in accordance with the Unified Soil Classification System (includes soil type, moisture, density/consistency of soil, and color)
- Odor (e.g., hydrogen sulfide or petroleum)
- Visual stratification, structure, and texture
- Vegetation
- Debris (e.g., woodchips or fibers, concrete, or metal debris)
- Evidence of biological activity (e.g., detritus, shells, tubes, bioturbation, or live or dead organisms)
- Presence of oil sheen
- Well construction details

- Deviations from the approved FSP

3.3 Well Development/Redevelopment and Groundwater Sampling Logs

Activities conducted during well development/redevelopment and sampling efforts will be recorded on appropriate log forms (Attachment A-2). The following information will be included:

- Date, time, and duration of development/sampling
- Names of field personnel collecting and handling the samples
- Type of sampling equipment used (e.g., bladder or peristaltic pump and tubing)
- Observations made during sample collection, including weather conditions, complications, and other details associated with the sampling effort
- The sample station identification
- Water-level data and estimate volume of water in well
- Field parameters collected during activity, along with time an approximate flow rate
- Incremental and total estimated volumes of well water removed
- Physical water description (e.g., cloudy, clear, and odor)
- Presence of oil sheen
- Any deviation from the approved FSP

3.4 Chain-of-Custody Procedures

Samples are in custody if they are in the custodian's view, stored in a secure place with restricted access, or placed in a container secured with custody seals (see SOP AP-03 in Attachment A-1). A COC record will be signed by each person who has custody of the samples and will accompany the samples at all times. COC forms will be preprinted by the laboratory and shipped with sample coolers. Completed COC forms will be included in laboratory and QA/QC reports.

At a minimum, the form will include the following information:

- Site name
- FL's name and team members responsible for collection of the listed samples
- Collection date and time for each sample

- Sample type (i.e., sample for immediate analysis or archive)
- Number of sample containers shipped
- Requested analyses
- Sample preservation information (if any)
- Name of the carrier relinquishing the samples to the transporter, noting date and time of transfer and the designated sample custodian at the receiving facility

The FL (or delegate) will be the designated field sample custodian and will be responsible for sample tracking and COC procedures for the samples. The field sample custodian will be responsible for final sample inventory and will maintain sample custody documentation. The field sample custodian will complete COC forms prior to removing samples from the field. Upon transferring samples to the laboratory sample custodian (if a local laboratory is selected) or shipping courier (as appropriate), the field sample custodian will sign, date, and note the time of transfer on the COC form. The original COC form will be transported with the samples to the laboratories. Samples will be shipped to the testing laboratories in either coolers or shipping containers sealed with custody seals.

Each laboratory will designate a sample custodian who will be responsible for receiving samples and documenting their progress through the laboratory analytical process. The sample custodian for each laboratory will establish the integrity of the custody seals upon the sample's arrival at the laboratory. The laboratory sample custodian will also ensure the COC and sample tracking forms are properly completed, signed, and initialed upon receipt of the samples.

When the laboratory receives the samples, the laboratory sample custodian will conduct an inventory by comparing sample labels to those on the COC document. The custodian will enter the sample number into a laboratory tracking system using a task code and sample designation. The custodian will assign a unique laboratory number to each sample and will be responsible for distributing the samples to the appropriate analyst or for storing samples at the correct temperature in an appropriate secure area.

3.5 Station Numbering

Sample stations will be assigned a unique identification code based on a designation scheme designed to suit the needs of the field personnel, data management staff, and data users. Station numbers will include "SJ" to indicate San Jacinto, followed by a two-letter code for the type of sample to be collected at a given location (e.g., MW = monitoring well). The letters will be followed by a three-digit alpha-numeric indicator (e.g., S01, D02, or S03). An example station number is SJMW010, indicating the monitoring well at location 10.

Station numbers will not be recorded on sample labels or COC forms to prevent analytical laboratories from seeing the relationships between samples and stations.

3.6 Sample Identifiers

Each sample from a given station will also have a unique label identifier. Sample identifiers will be established before field sampling begins and assigned to each sample as it is collected. Sample identifiers consist of codes designed to fulfill three purposes: 1) to identify related samples (e.g., field split samples) to ensure proper data analysis and interpretation; 2) to obscure the relationships between samples so that laboratory analysis will be unbiased by presumptive similarities between samples; and 3) to track individual sample containers to ensure the laboratory receives all of the material associated with a single sample. To accomplish these purposes, each container is assigned a sample number and a tag number. These codes and their uses are described below:

- A sample identifier for each sample will be created using the station number (e.g., SJMW010), followed by a code for the kind of sample collected at a given location (S = soil, W = groundwater). In addition, each sample will have a sample number of 4 final numbers that will distinguish between the different sample intervals (e.g., 0005 = 0 to 5 feet, 0510 = 5 to 10 feet, etc.). Water samples will have the final number identifier 0000.
- All subsamples of a composited field sample will have the same sample number. Each field split sample will have a different sample number, and the sample numbers of related field QC samples may not share any content. The sample number appears on the sample containers and the COC forms.

- A unique numeric sample tag number will be attached to each sample container. If the amount of material (i.e., everything associated with a single sample number) is too large for a single container, each container will have the same sample number and a different sample label with a unique sample tag number. A sample will also be split between containers if a different preservation technique is used for each container (i.e., because different analyses will be conducted). The sample tag number will appear on the COC forms. Tag numbers are used by laboratories only to confirm that they have received all of the containers that were filled and shipped. Data are reported by sample number.

Sample numbers will be assigned sequentially in the field, and sample labels will be preprinted with tag numbers. For equipment filter wipe blanks, sequential numbers starting at 900 will be assigned instead of station numbers.

4 FIELD DATA MANAGEMENT AND REPORTING PROCEDURES

During field operations, effective data management is critical to providing consistent, accurate, and defensible data and data products. Daily field records (a combination of field log books, field forms [if any], and COC forms) will comprise the main documentation for field activities. Upon completion of sampling, field notes, datasheets (if any), and COC forms will be scanned to create an electronic record. Field data will be manually entered into the project database. All of the transferred data will be verified based on hardcopy records. Electronic QA checks to identify anomalous values will also be conducted following entry.

Additional discussion of field data management is provided in the SAP.

5 REFERENCES

See SAP for references.

TABLES

Table A-1
Sample Collection Matrix

Station ID	Station Coordinates		North or South of I-10	Sample Id[a]	Sample Matrix	COPCs 2,3,7,8-TCDD, 2,3,7,8-TCDF, and 2,3,4,7,8-PeCDF	PRCs (^{37}Cl-labeled 2,3,7,8-TCDD, and ^{13}C-labeled 1,2,3,4-TCDF and 2,3,4,7,8-PeCDF)
	Easting	Northing					
SJMW001	3215982	13856907	South	SJMW001W0000	Groundwater (SPME Fiber)	x	x
SJMW002	3216108	13856578		SJMW002W0000		x	x
SJMW003	3215744	13856486		SJMW003W0000		x	x
SJMW004S	3215488	13856028		SJMW004WS000		x	x
SJMW004D	3215492	13856035		SJMW004WD000		x	x
SJMW005	3215384	13856073		SJMW005W0000		x	x
SJMW006	3215247	13855964		SJMW006W0000		x	x
SJMW007	3215308	13856240		SJMW007W0000		x	x
SJMW008	3215564	13856650		SJMW008W0000		x	x
SJMW009	3215919	13856983		SJMW009W0000		x	x
SJMW010	3216704	13857570	North	SJMW010W0000		x	x
SJMW011	3216692	13857341		SJMW011W0000		x	x
SJMW012	3217047	13857734		SJMW012W0000		x	x
SJMW013	3217250	13857052		SJMW013W0000		x	x
Quality Assurance / Quality Control Samples							
NA	NA	NA	NA	Per FSP	SPME fiber blank (1 blank)	x	x
					Solvent rinse blank (2 blanks[b])	x	
					SPME fiber for laboratory QC (3 fibers)	x	x
					Field replicates (2 replicates[c])	x	x
					Environmental SPME blank (2 blanks[d])	x	x
					PRC control blank (5 fibers[e])		x

Notes:
a. See FSP for detailed sample identification procedures.
b. One rinse blank will be prepared from all fibers, and one will be prepared from one fully assembled sampling device.
c. One replicate will be obtained in SJMW004D, and one will be obtained in SJMW012.
d. One blank will be generated during deployment, and one will be generated during retrieval.
e. Five SPME fibers will be analyzed to determine initial concentrations (C_0) of PRCs.
I-10 = Interstate 10
COPCs = contaminants of potential concern
FSP = Field Sampling Plan
NA = not applicable
PRC = performance reference compounds
QC = quality control
SAP = Sampling and Analysis Plan
SPME = solid-phase microextraction

Table A-2
Sample Containers, Preservation, and Holding Time Requirements

Matrix	Container[a, b]		Laboratory	Parameter	Preservation[c]	Holding Time[d, e]	Sample Size[f]
	Type	Size					
SPME fiber (groundwater)							
Fiber	Glass vial	60 mL	ALS Houston	Target analytes (2,3,7,8-TCDD, 2,3,7,8-TCDF, 2,3,4,7,8-PeCDF), PRCs (^{37}Cl-labeled 2,3,7,8-TCDD, ^{13}C-labeled 1,2,3,4-TCDF, ^{13}C-labeled 2,3,4,7,8-PeCDF)	Hexane	6 months to extract, additional 1 year after extraction	5 feet

Notes:

a. The size and number of containers may be modified by the analytical laboratory.

b. Samples will be shipped to the laboratory on ice at 4 plus or minus 2°C. Once received at the laboratory, samples will be stored at -20°C.

c. Extracts will be stored at -10°C and may be changed based on lab availability to deionized water.

d. Holding time for samples is prior to extraction/holding time for extracts.

e. Published holding time does not exist. Holding time shown is based on best professional judgment and based on 2012 San Jacinto SAP.

f. Sample sizes may be modified once laboratory selection is made.

mL = millileters

PRCs = performance reference compounds

SAP = Sampling and Analysis Plan

SPME = solid-phase microextraction

TBD = to be determined

FIGURES

AERIAL SOURCE: Bing, 2015.
HORIZONTAL DATUM: Texas State Plane South Central, NAD83, U.S. Feet.
VERTICAL DATUM: North American Vertical Datum of 1988 (NAVD88).

LEGEND:
Northern Impoundments:
1966 North Impoundments Perimeter

0 200
Scale in Feet

M:\CAD\Projects\0557-McGinnes Industrial Maintenance Corp\Superfund Site RIFS and TCRA\0557-RP-000a.dwg F A-1a MIMC
Nov 18, 2015 2:01pm tgriga

ANCHOR QEA

Figure A-1a
Site and Vicinity Map
SJRWP Addendum 3 Groundwater SAP
SJRWP Superfund/MIMC and IPC

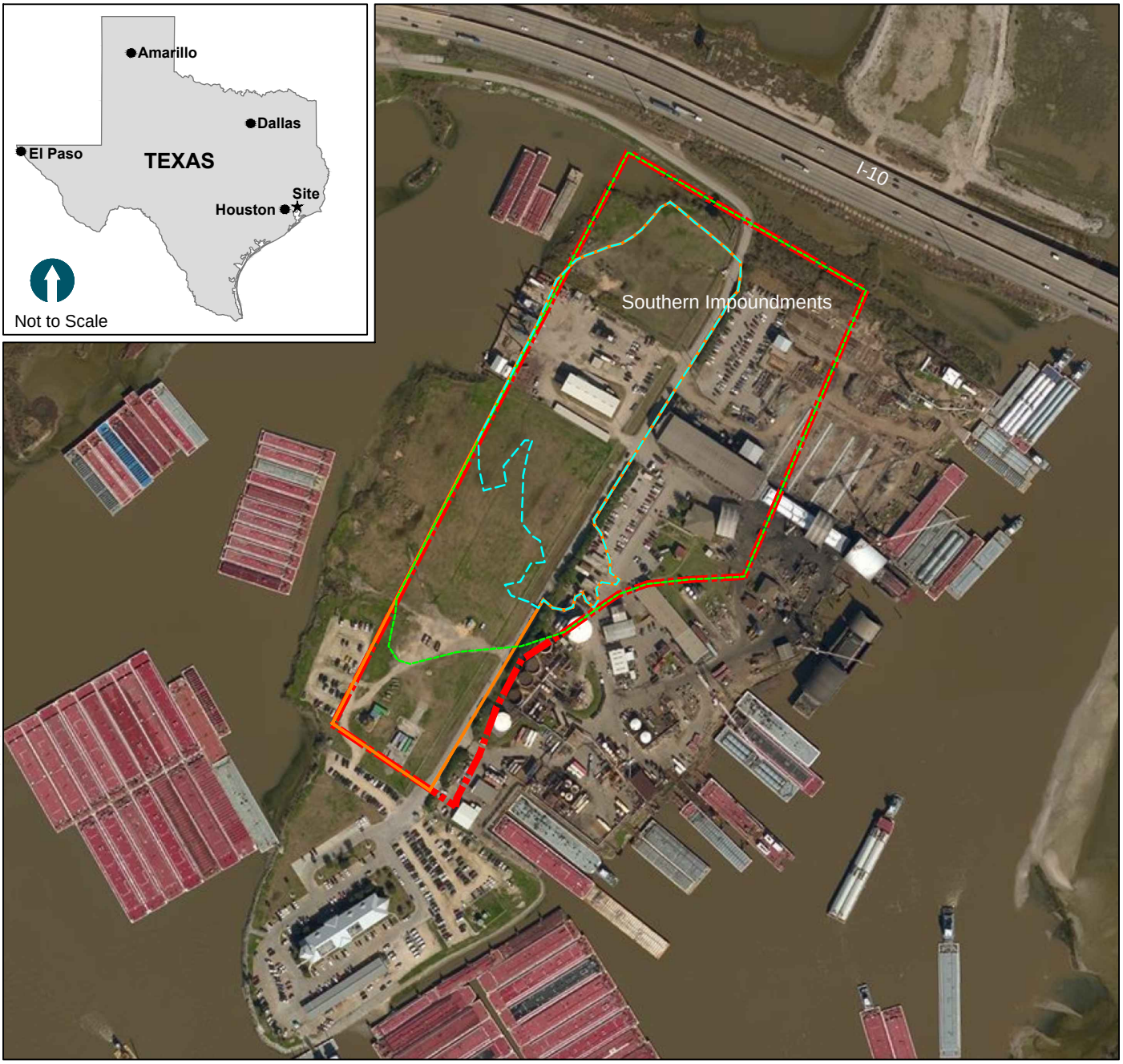

AERIAL SOURCE: Bing, 2015.
HORIZONTAL DATUM: Texas State Plane South Central, NAD83, U.S. Feet.
VERTICAL DATUM: North American Vertical Datum of 1988 (NAVD88).

LEGEND:

Southern Impoundments:

- Texas State Department of Health (Hand Drawn)
- 1966 Texas State Department of Health (Hand Drawn)
- 1966 USGS (from Aerial Image)
- 1966 Flooded Area (from Aerial Image)

0 400
Scale in Feet

M:\CAD\Projects\0557-McGinnes Industrial Maintenance Corp\Superfund Site RIFS and TCRA\0557-RP-000.dwg F A-1b - IPC
Nov 18, 2015 11:10am dholmer

Figure A-1b
Site and Vicinity Map
SJRWP Addendum 3 Groundwater SAP
SJRWP Superfund IPC

ANCHOR QEA

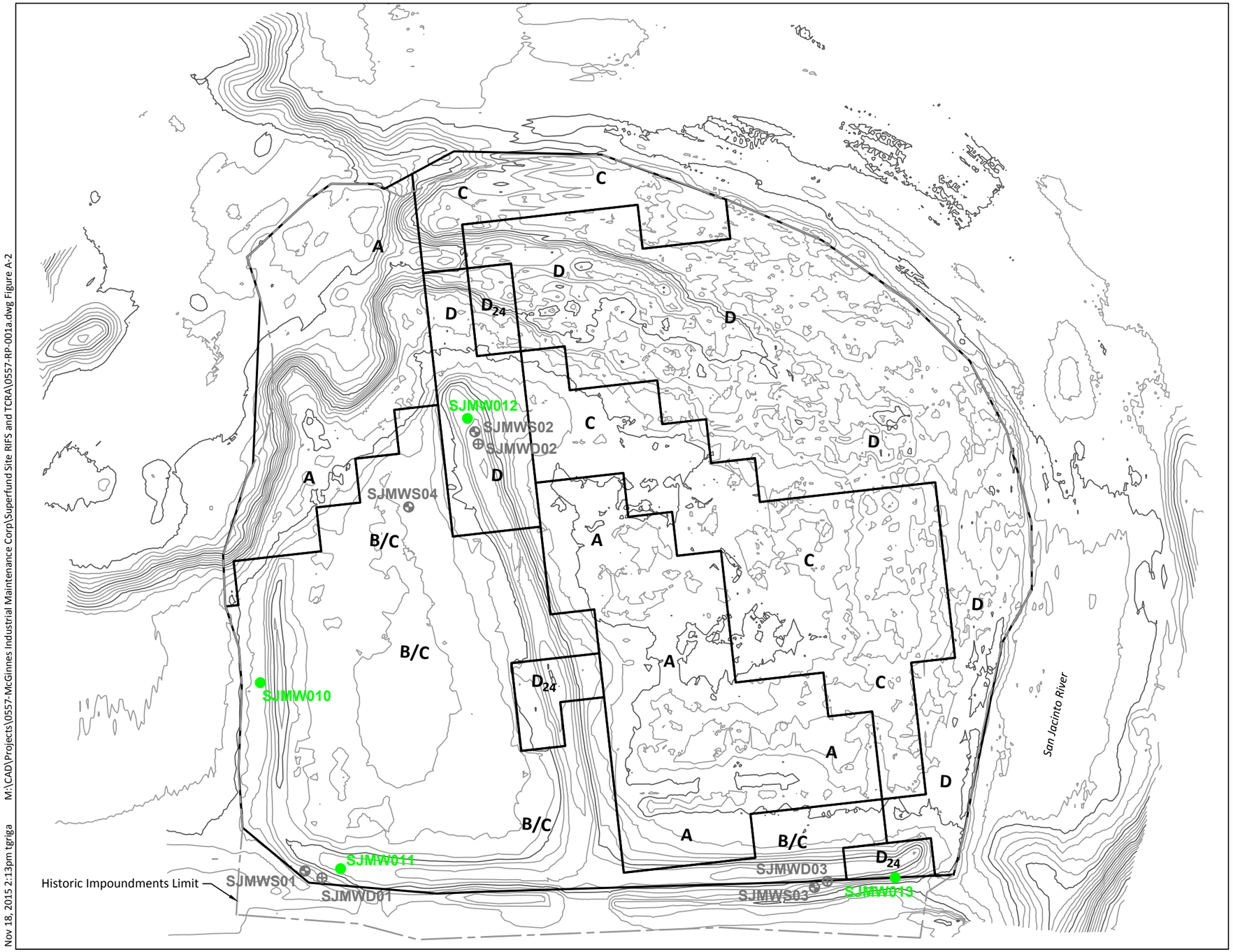

LEGEND:

- July 2015 Bathymetric and Topographic Contours (1 Foot Interval)
- B/C — Armored Cap Type and Boundary
- Historic Impoundments Limit
- SJMW0010 — Well Location and Designation
- SJMWS01, SJMWD01 — Removed/Abandoned Well Locations

Proposed Well Coordinates		
Designation	Easting	Northing
SJMW010	3,216,704	13,857,570
SJMW011	3,216,692	13,857,341
SJMW012	3,217,047	13,857,734
SJMW013	3,217,250	13,857,052

SOURCE: Drawing prepared from survey provided by Hydrographic Consultants dated July 2015.
HORIZONTAL DATUM: Texas State Plane South Central, NAD83, U.S. Feet.
VERTICAL DATUM: NAVD 88.

0 120
Scale in Feet

M:\CAD\Projects\0557-McGinnes Industrial Maintenance Corp\Superfund Site RIFS and TCRA\0557-RP-001a.dwg Figure A-2
Nov 18, 2015 2:13pm tgriga

ANCHOR QEA

Figure A-2
Well Locations North of I-10
SJRWP Addendum 3 Groundwater SAP
SJRWP Superfund/MIMC and IPC

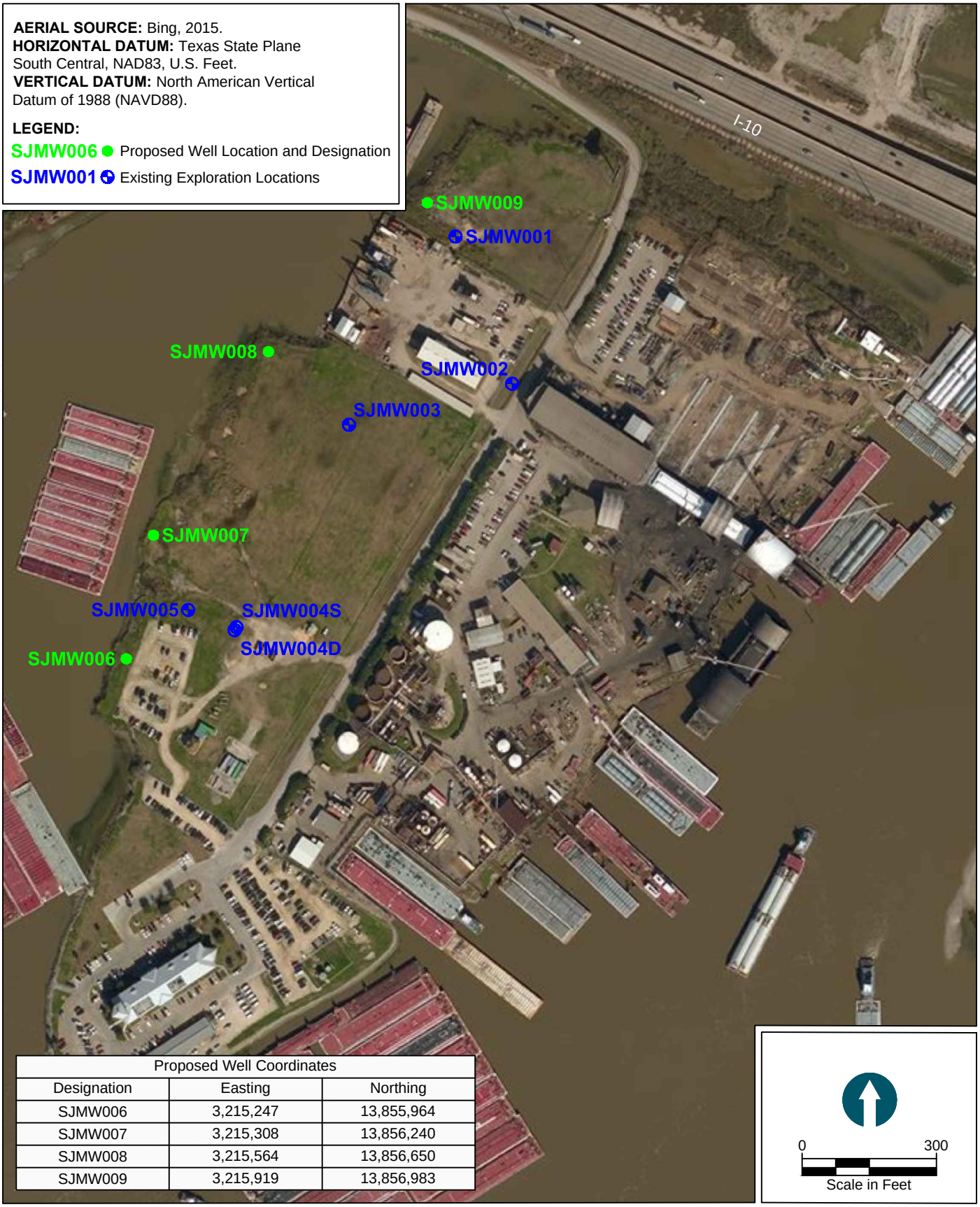

Proposed Well Coordinates		
Designation	Easting	Northing
SJMW006	3,215,247	13,855,964
SJMW007	3,215,308	13,856,240
SJMW008	3,215,564	13,856,650
SJMW009	3,215,919	13,856,983

Nov 18, 2015 10:54am dholmer M:\CAD\Projects\0557-McGinnes Industrial Maintenance Corp\Superfund Site RIFS and TCRA\0557-RP-000.dwg Figure A-3

Figure A-3
Proposed and Existing Well Locations South of I-10
SJRWP Addendum 3 Groundwater SAP
SJRWP Superfund MIMC/IPC

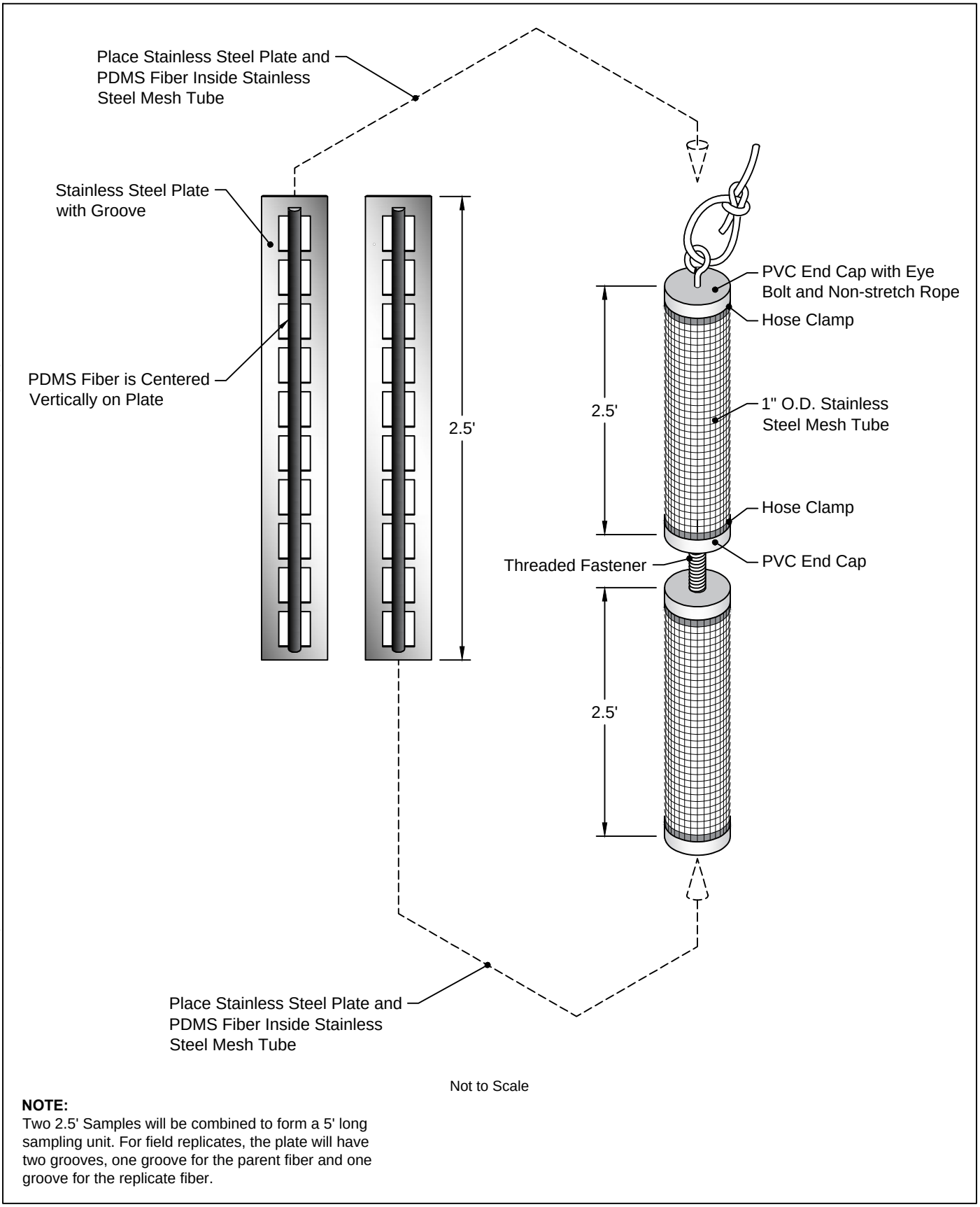

NOTE:
Two 2.5' Samples will be combined to form a 5' long sampling unit. For field replicates, the plate will have two grooves, one groove for the parent fiber and one groove for the replicate fiber.

Nov 18, 2015 10:54am dholmer M:\CAD\Projects\0557-McGinnes Industrial Maintenance Corp\Superfund Site RIFS and TCRA\0557-RP-000.dwg Figure A-4

Figure A-4
Conceptual SPME Sampling Apparatus for Groundwater Wells
SJRWP Addendum 3 Groundwater SAP
SJRWP Superfund/MIMC and IPC

ANCHOR QEA

ATTACHMENT A-1
STANDARD OPERATING PROCEDURES

Designation: D6914 – 04 (Reapproved 2010)

Standard Practice for Sonic Drilling for Site Characterization and the Installation of Subsurface Monitoring Devices[1]

This standard is issued under the fixed designation D6914; the number immediately following the designation indicates the year of original adoption or, in the case of revision, the year of last revision. A number in parentheses indicates the year of last reapproval. A superscript epsilon (ε) indicates an editorial change since the last revision or reapproval.

1. Scope

1.1 This practice covers procedures for using sonic drilling methods in the conducting of geoenvironmental exploration for site characterization and in the installation of subsurface monitoring devices.

1.2 The use of the sonic drilling method for geoenvironmental exploration and monitoring-device installation may often involve preliminary site research and safety planning, administration, and documentation. This guide does not purport to specifically address site exploration planning and site safety.

1.3 Soil or Rock samples collected by sonic methods are classed as group A or group B in accordance with Practices D4220. Other sampling methods may be used in conjunction with the sonic method to collect samples classed as group C and Group D.

1.4 The values stated in SI units are to be regarded as standard. The inch-pound units given in parentheses are for information only.

1.5 This practice offers a set of instructions for performing one or more specific operations. It is a description of the present state-of-the-art practice of sonic drilling. It does not recommend this method as a specific course of action. This document cannot replace education or experience and should be used in conjunction with professional judgment. Not all aspects of this practice may be applicable in all circumstances. This ASTM standard is not intended to represent or replace the standard of care by which the adequacy of a given professional service must be judged, nor should this document be applied without consideration of a project's many unique aspects. The word "Standard" in the title of this document means only that the document has been approved through the ASTM consensus process.

1.6 This practice does not purport to comprehensively address all the methods and the issues associated with drilling practices. Users should seek qualified professionals for decisions as to the proper equipment and methods that would be most successful for their site investigation. Other methods may be available for drilling and sampling of soil, and qualified professionals should have the flexibility to exercise judgment as to possible alternatives not covered in this practice. This practice is current at the time of issue, but new alternative methods may become available prior to revisions, therefore, users should consult manufacturers or sonic drilling services providers prior to specifying program requirements.

1.7 *This practice does not purport to address all the safety concerns, if any, associated with its use and may involve use of hazardous materials, equipment, and operations. It is the responsibility of the user of this standard to establish appropriate safety and health practices and determine the applicability of regulatory requirements prior to use.* For good safety practice, consult applicable OSHA regulations and drilling safety guides.[2,3,4]

2. Referenced Documents[5]

2.1 *ASTM Standards—Soil Classification:*

D653 Terminology Relating to Soil, Rock, and Contained Fluids

D2113 Practice for Rock Core Drilling and Sampling of Rock for Site Exploration

D2488 Practice for Description and Identification of Soils (Visual-Manual Procedure)

D5434 Guide for Field Logging of Subsurface Explorations of Soil and Rock

2.2 *ASTM Standards—Drilling Methods:*

D1452 Practice for Soil Exploration and Sampling by Auger Borings

D5088 Practice for Decontamination of Field Equipment Used at Waste Sites

[1] This practice is under the jurisdiction of ASTM Committee D18 on Soil and Rock and is the direct responsibility of Subcommittee D18.21 on Groundwater and Vadose Zone Investigations.

Current edition approved July 1, 2010. Published September 2010. Originally approved in 2004. Last previous edition approved in 2004 as D6914–04 ε1. DOI: 10.1520/D6914-04R10.

[2] "Drilling Safety Guide," National Drilling Association.

[3] "Drillers Handbook," Thomas C. Ruda and Peter Bosscher, National Drilling Association.

[4] "Innovative Technology Summary Report," April 1995, U.S. Department of Energy.

[5] For referenced ASTM standards, visit the ASTM website, www.astm.org, or contact ASTM Customer Service at service@astm.org. For *Annual Book of ASTM Standards* volume information, refer to the standard's Document Summary page on the ASTM website.

Copyright © ASTM International, 100 Barr Harbor Drive, PO Box C700, West Conshohocken, PA 19428-2959. United States

Copyright by ASTM Int'l (all rights reserved); Fri Oct 16 11:58:49 EDT 2015
Downloaded/printed by
Chris Torell (none) pursuant to License Agreement. No further reproductions authorized.

D5299 Guide for Decommissioning of Groundwater Wells, Vadose Zone Monitoring Devices, Boreholes, and Other Devices for Environmental Activities
D5791 Guide for Using Probability Sampling Methods in Studies of Indoor Air Quality in Buildings
D5782 Guide for Use of Direct Air-Rotary Drilling for Geoenvironmental Exploration and the Installation of Subsurface Water-Quality Monitoring Devices
D5783 Guide for Use of Direct Rotary Drilling with Water-Based Drilling Fluid for Geoenvironmental Exploration and the Installation of Subsurface Water-Quality Monitoring Devices
D5784 Guide for Use of Hollow-Stem Augers for Geoenvironmental Exploration and the Installation of Subsurface Water-Quality Monitoring Devices
D6151 Practice for Using Hollow-Stem Augers for Geotechnical Exploration and Soil Sampling
D6286 Guide for Selection of Drilling Methods for Environmental Site Characterization

2.3 *ASTM Standards—Soil Sampling:*

D420 Guide to Site Characterization for Engineering Design and Construction Purposes (Withdrawn 2011)[6]
D1586 Test Method for Penetration Test (SPT) and Split-Barrel Sampling of Soils
D1587 Practice for Thin-Walled Tube Sampling of Soils for Geotechnical Purposes
D3550 Practice for Thick Wall, Ring-Lined, Split Barrel, Drive Sampling of Soils
D3694 Practices for Preparation of Sample Containers and for Preservation of Organic Constituents
D4220 Practices for Preserving and Transporting Soil Samples
D4700 Guide for Soil Sampling from the Vadose Zone
D6169 Guide for Selection of Soil and Rock Sampling Devices Used With Drill Rigs for Environmental Investigations

2.4 *ASTM Standards—Aquifer Testing:*

D4044 Test Method for (Field Procedure) for Instantaneous Change in Head (Slug) Tests for Determining Hydraulic Properties of Aquifers
D4050 Test Method for (Field Procedure) for Withdrawal and Injection Well Testing for Determining Hydraulic Properties of Aquifer Systems
D5092 Practice for Design and Installation of Groundwater Monitoring Wells

2.5 *ASTM Standards—Other:*

D3740 Practice for Minimum Requirements for Agencies Engaged in Testing and/or Inspection of Soil and Rock as Used in Engineering Design and Construction

3. Terminology

3.1 Terminology used within this guide is in accordance with Terminology D653. Definitions of additional terms may be found in Terminology D653.

3.2 *Definitions of Terms Specific to This Standard:*

3.2.1 *amplitude*—range of drill bit movement necessary to overcome formation elasticity.

3.2.2 *bit face design*—the practice of changing the drill bit face to be neutral to, include, exclude, or shear the material being penetrated.

3.2.3 *forced vibration*—the tendency of one object to force an adjoining or interconnected object into vibrational motion.

3.2.4 *harmonic*—the point in a drill string where a special frequency creates a standing wave pattern throughout the string.

3.2.5 *hertz*—international unit of frequency, equal to one cycle per second.

3.2.6 *hydraulic extraction*—the removal of the sample specimen from the solid sampling barrel by the application of fluid.

3.2.7 *natural frequency*—the frequency or frequencies at which an object tends to vibrate when disturbed.

3.2.8 *resonance*—when one object (sine generator) vibrating at the natural frequency of a second object (drill pipe or casing) forces the second object into vibrational motion.

3.2.9 *sine wave*—a wave form corresponding to a single-frequency periodic oscillation.

3.2.10 *sinusoidal force*—energy force generated by an oscillator that is transmitted to the drill tool string.

3.2.11 *sonic*—the practice of using high frequency vibration as the primary force to advance drill tools through subsurface formations.

3.2.12 *standing wave pattern*—a vibratory pattern created within the drill string where the vibrating frequency of a carrier causes a reflected wave from one end of the drill string to interfere with incidental waves from the source in such a manner that at specific points along the drill string it appears to be standing still. The resulting disturbance is a regular pattern.

4. Summary of Practice

4.1 Sonic drilling is the utilization of high frequency vibration aided by down pressure and rotation to advance drilling tools through various subsurface formations. All objects have a natural frequency or set of frequencies at which they will vibrate when disturbed. The natural frequency is dependant upon the properties of the material the object is made of and the length of the object. The sonic drill head provides the disturbance to the drilling tools causing them to vibrate. To achieve penetration of the formation the strata is fractured, sheared, or displaced. The high frequency vibration can cause the soil in contact with the drill bit and drilling casing string to liquefy and flow away allowing the casing to pass through with reduced friction. Rotation of the drill string is primarily for even distribution of the applied energy, to control bit wear, and to help maintain borehole alignment. The use of vibratory technology reduces the amount of drill cuttings, provides rapid formation penetration, and the recovery of a continuous core sample of formation specimens for field analysis and laboratory testing. Boreholes generated by sonic drilling can be fitted with various subsurface condition monitoring devices. Numerous sampling techniques can also be used with this system

[6] The last approved version of this historical standard is referenced on www.astm.org.

Copyright by ASTM Int'l (all rights reserved); Fri Oct 16 11:58:49 EDT 2015
Downloaded/printed by
Chris Torell (none) pursuant to License Agreement. No further reproductions authorized.

including thin walled tubes, split barrel samplers, and *in-situ* groundwater sampling devices. Fig. 1 demonstrates the general principle of sonic drilling.

5. Significance and Use

5.1 Sonic drilling is used for geoenvironmental investigative programs. It is well suited for environmental projects of a production-orientated nature. Disposal of drilling spoils is a major cost element in any environmental project. Sonic drilling offers the benefit of significantly reduced drill cuttings and reduced fluid production. Sonic drilling offers rapid formation penetration thereby increasing production. It can reduce fieldwork time generating overall project cost reductions. The continuous core sample recovered provides a representative lithological column for review and analysis. Sonic drilling readily lends itself to environmental instrumentation installation and to *in-situ* testing. The advantage of a clean cased hole without the use of drilling fluids provides for increased efficiency in instrumentation installation. The ability to cause vibration to the casing string eliminates the complication of backfill bridging common to other drilling methods and reduces the risk of casing lockup allowing for easy casing withdrawal during grouting. The clean borehole reduces well development time. Pumping tests can be performed as needed prior to well screen placement to insure proper screen location. The sonic method is readily utilized in multiple cased well applications which are required to prevent aquifer cross contamination. Notwithstanding the possibility of vibratory effects on the surrounding formations, the same sonic drilling plus factors for environmental monitoring device installations carry over for geotechnical instrumentation as well. The installation of inclinometers, vibrating wire piezometers, settlement gauges, and the like can be accomplished efficiently with the sonic method.

5.2 The cutting action, as the sonic drilling bit passes through the formation, may cause disturbance to the soil structure along the borehole wall. The vibratory action of directing the sample into the sample barrel and then vibrating it back out can cause distortion of the specimen. Core samples can be hydraulically extracted from the sample barrel to reduce distortion. The use of split barrels, with or without liners, may improve the sample condition but may not completely remove the vibratory effect. When penetrating rock formations, the vibration may create mechanical fractures that can affect structural analysis for permeability and thereby not reflect the true *in-situ* condition. Sonic drilling in rock will require the use of air or fluid to remove drill cuttings from the face of the bit, as they generally cannot be forced into the formation. Samples collected by the dry sonic coring method from dense, dry, consolidated or cemented formations may be subjected to drilling induced heat. Heat is generated by the impact of the bit on the formation and the friction created when the core barrel is forced into the formation. The sampling barrel is advanced without drilling fluid whenever possible. Therefore, in very dense formations, drilling fluids may have to be used to remove drill cuttings from the bit face and to control drilling generated heat. In dry, dense formations precautions to control drilling generated heat may be necessary to avoid affecting contaminant presence. The affects of drilling generated heat can be mitigated by shortening sampling runs, changing vibration level and rotation speed, using cooled sampling barrels, collecting larger diameter samples to reduce affect on the interior of the sample, and using fluid coring methods or by using alternate sampling methods such as the standard penetration test type samplers at specific intervals. Heat generated while casing the borehole through dense formations after the core sample has been extracted can be alleviated by potable water injection and/or by using crowd-in casing bits that shear the

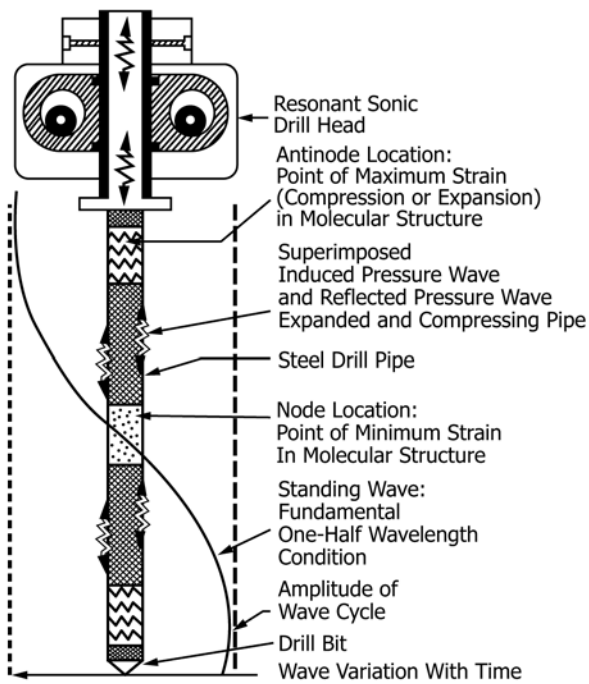

FIG. 1 General Principle of Sonic Drilling

Copyright by ASTM Int'l (all rights reserved); Fri Oct 16 11:58:49 EDT 2015
Downloaded/printed by
Chris Torell (none) pursuant to License Agreement. No further reproductions authorized.

formation with minimal resistance. Should borehole wall densification be a concern it can be alleviated by potable water injection, by borehole wall scraping with the casing bit, by using a crowd-in style bit, or by injecting natural clay breakdown compounds.

5.3 Other uses for the sonic drilling method include mineral investigations. Bulk samples can be collected continuously, quite rapidly, in known quantities to assess mineral content. Aggregate deposits can be accurately defined by using large diameter continuous core samplers that gather representative samples. A limited amount of rock can be effectively penetrated and crushability determined. In construction, projects include freeze tube installations for deep tunnel shafts, piezometers, small diameter piles, dewatering wells, foundation anchors with grouting, and foundation movement monitoring instrumentation. Sonic drills can be used to set potable water production wells. However, production may not equal more conventional potable well drilling techniques because of the need to transport drill cuttings to the surface in short increments. Sonic drill units presently in use are in various sizes and most are truck mounted. Sonic drills can be skid or all-terrain vehicle mounted to access difficult areas.

5.4 Sonic drills can be adapted to such other drill methods as conventional rotary (Guide D1583, Guide D5782), down hole air hammer work (Guide D5782), diamond bit rock coring; conventional and wireline (Practice D2113), direct push probing (Guide D6001, Guide D6286), thin wall tube sampling (Practice D1587), and standard penetration test split barrel sampling (Practice D1586). The sonic drilling equipment offers more adaptability than most existing drilling systems. However, it is important to keep in mind that the technique the machine is designed for is the one at which it will be the most efficient. Long term use of sonic drills for other drilling methods may not be cost effective.

NOTE 1—The quality of the result produced by this standard is dependent on the competence of the personnel performing it, and the suitability of the equipment and facilities used. Agencies that meet the criteria of Practice D3740 are generally considered capable of competent and objective testing/sampling/inspection/etc. Users of this standard are cautioned that compliance with Practice D3740 does not in itself assure reliable results. Reliable results depend on many factors; Practice D3740 provides a means of evaluating some of those factors. Practice D3740 was developed for agencies engaged in the testing and/or inspection of soils and rock. As such, it is not totally applicable to agencies performing this practice. However, user of this practice should recognize that the framework of Practice D3740 is appropriate for evaluating the quality of an agency performing this practice. Currently there is no known qualifying national authority that inspects agencies that perform this practice.

6. Criteria for Selection

6.1 Important criteria to consider when selecting the sonic drilling method include the following:

6.1.1 Diameter of borehole,

6.1.2 Sample quality (Class A, B, C, D) for laboratory physical testing (Refer to Practices D4220),

6.1.3 Sample handling requirements such as containers, preservation requirements,

6.1.4 Subsurface conditions anticipated: soil type or rock type/hardness,

6.1.5 Groundwater depth anticipated,

6.1.6 Boring depth,

6.1.7 Instrumentation requirements,

6.1.8 Chemical composition of soil and contained pore fluids,

6.1.9 Available funds,

6.1.10 Estimated cost,

6.1.11 Time constraints,

6.1.12 History of method performance under anticipated conditions (consult experienced users and manufacturers),

6.1.13 Site accessibility,

6.1.14 Decontamination requirements,

6.1.15 Grouting requirements, local regulations, and

6.1.16 Amount of and disposal costs for generated drill cuttings and drilling wastes.

7. Apparatus

7.1 *Sonic Head*—The sonic drill head contains a sine generator, sine generator drive mechanism, lubrication system to reduce friction and control heat in the head, vibration isolation device, drill string rotating mechanism, and a connection to the drill string. The sine generator must be capable of producing sufficient energy to force movement in the drill string to accomplish the fracturing, shearing or displacement necessary for the borehole to be advanced as shown in Fig. 1.

7.1.1 *Sine Generator*—The sine generator uses eccentric, counter rotating balance weights that are timed to direct 100 percent of the vibration at 0 degrees and at 180 degrees (Figs. 2 and 3). The sine generator is powered hydraulically and generally operates at frequencies between 0 and 185 hertz delivering a full range of energy outputs for advancement of up to 30.48 cm (12 in.) drill casing.

7.1.2 *Lubrication System*—The lubrication system is fitted with oil coolers of sufficient capacity to keep the hydraulic fluid at an allowable operating range as recommended by the oil supplier.

7.1.3 *Vibration Isolation System*—In order to transmit the maximum vibratory energy to the drill string and not damage the drilling rig the vibration applied to the drill tools must be isolated from the drill rig as shown in Figs. 2 and 3. This can be accomplished by using air charged springs, manual disk springs, or such other methods as will meet that goal.

7.2 *Drilling Tools*—A significant variety of tooling is necessary to accomplish the sonic drilling program. The tools consist of drill rods, drill casing, sampler barrels, sampler bits, casing bits, direct push sampling probes, borehole water sample collection systems, etc. Individual drillers and companies have in-house tooling designed for specific purposes and projects. If these specialized tools provide high quality sampling and efficient drilling processes they are acceptable to the practice.

7.2.1 *Drilling Rods and Casing*—Drilling rods are used to propel and recover the sampling barrels. Drill rods are the most handled tools. The common sizes are 5.08 cm (2.0 in.) to 10.16 cm (4.0 in.) O.D. × 60.98 cm (2.0 ft), 1.524 m (5.0 ft), 3.38 m (10.0 ft), and 6.096 m (20.0 ft) lengths. Annular space between casing and rod is not critical allowing the same sized drill rod to be used with various sized sampling barrels. Current sonic drilling technology can be used to set drill casing in various

Copyright by ASTM Int'l (all rights reserved); Fri Oct 16 11:58:49 EDT 2015
Downloaded/printed by
Chris Torell (none) pursuant to License Agreement. No further reproductions authorized.

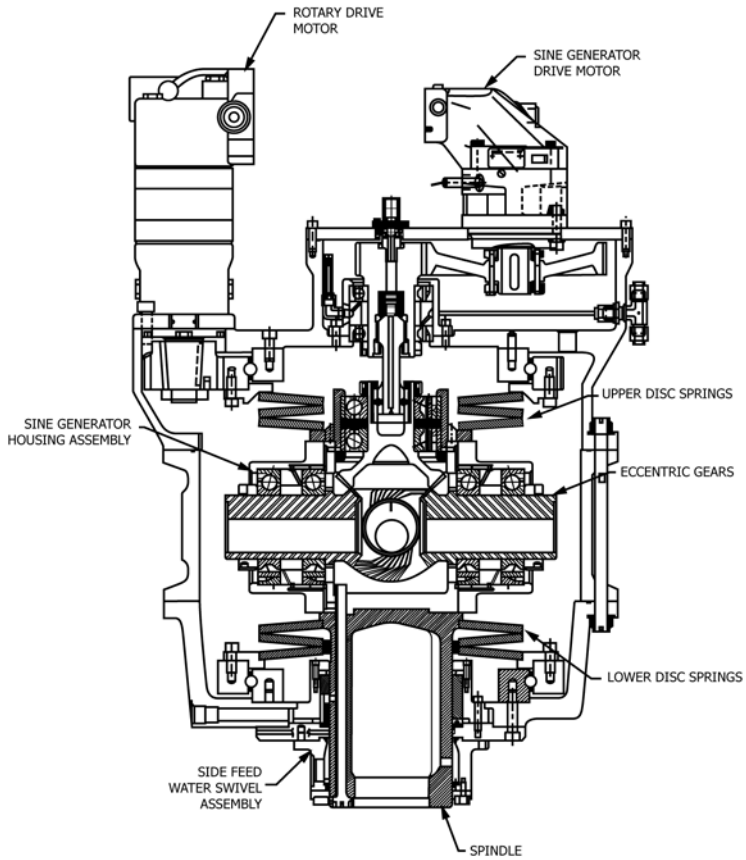

FIG. 2 Typical Sonic Drill Head with Disk Spring Form of Isolation System

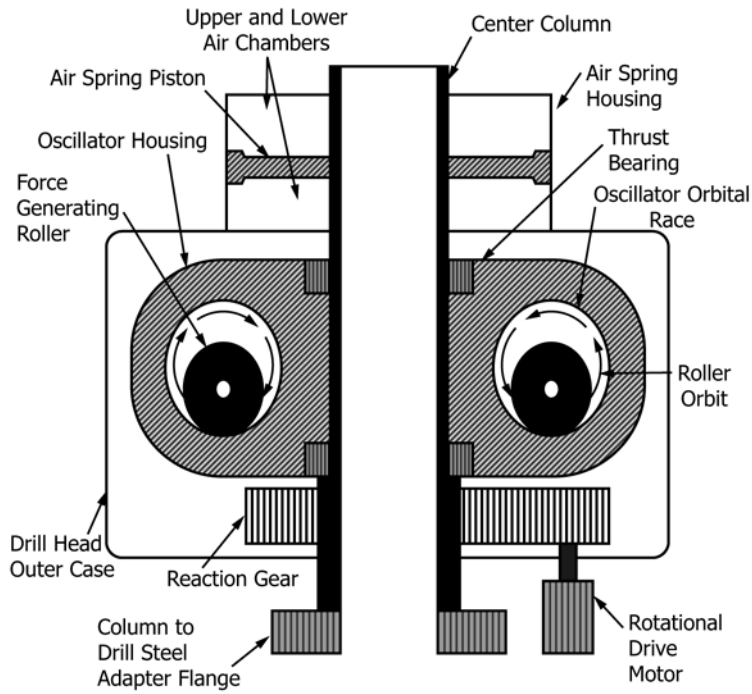

FIG. 3 Typical Sonic Drill Head with Air Spring Form of Isolation System

sizes from 1.27 cm (0.5 in.) up to 30.48 cm (12.0 in.) nominal depending on project requirements.

7.2.2 *Sampler Barrel*—Sampler barrels (a.k.a. core barrels) are used to recover formation specimens and to clean the inside

Copyright by ASTM Int'l (all rights reserved); Fri Oct 16 11:58:49 EDT 2015
Downloaded/printed by
Chris Torell (none) pursuant to License Agreement. No further reproductions authorized.

of the drill casing. Sampler barrels are either solid tubes or split barrels of various diameters and lengths. The sampling barrels are generally sized to match the inside diameter of the various sizes of drill casing and to fulfill project requirements. The barrel is fitted with a drill bit/cutting shoe that holds the borehole alignment as it passes through the outer casing into the formation.

7.2.2.1 *Solid Barrels*—Solid sampler barrels are a solid length of tubing with thread sections on each end. They are available in various sizes and lengths. Typical sampling runs are 3.048 to 6.096 m (10.0 to 20.0 ft) in length. Sampling run length can be adjusted to provide the most optimum sample recovery. Sampler barrels can be joined to increase the length of sampling increment. In some formations there is a tendency to lose recovery with longer core run lengths while in others longer core runs may improve recovery. Samples of loose unconsolidated granular formations can be consolidated by the vibratory action. In loose or soft formations the inability of the soil structure to support the force necessary to move the material into the barrel can cause that material to be forced into the formation.

7.2.2.2 *Split Barrel Samplers*—Split barrel samplers are tubes that are split lengthwise with thread sections on both ends. The split sections utilize a tongue & groove feature that interlocks to prevent lateral movement between the two halves of the tube. Split barrel samplers are available in various diameters and lengths. While split barrel samplers provide a better format to view the specimen and may subject it to less disturbance, they do receive vibratory action during penetration. Depending on the method of construction, split barrels have a tendency to spread open in hard formations. They are quite heavy when fully loaded and may require special handling techniques. Liners, clear butyl or polyethylene based plastic, or stainless steel are available for use with split barrel and solid barrel samplers.

7.2.2.3 Standard formation sampling devices can be used in conjunction with the sonic drill rig for geotechnical applications. The standard penetration test D1586 can be performed if the unit is equipped with a cathead or an automatic-hammer 63.523 kg (140 lb). The hydraulically activated, D6519, as well as manual, fixed piston, thin wall tube samplers D1587 can be used if the unit is equipped with a fluid pump of sufficient capacity. Sonic drills are generally equipped with winch lines for using sampling tools in geotechnical drilling programs.

7.2.3 *Casing Drill Bits*—Drill bits are attached to the leading section of drill casing. Their function is to provide a cutting edge to assist in moving the casing through the various formations encountered and to direct the movement of formation materials during the making of the boring. The face of the drill bit follows one of three basic directional designs: (*1*) "Crowd-in" move most of the material encountered at the drill face into the borehole or casing as it is advanced. This style of bit face provides the best service in dense, dry, or cohesive formations as it helps reduce formation compaction and friction; (*2*) "Crowd-out" moves most of the material encountered at the drill face into the borehole wall. This design works better in softer and more granular, sands, gravels, and silt formations; and (*3*) "Neutral" allows the bit face material to choose the path of least resistance. Different bit face configurations are used to effectively penetrate different formations. The general-purpose bit face is fitted with carbide buttons spaced equally across and around the bit face. Fig. 4 shows a typical carbide button faced bit. The carbide buttoned bit works well in most formations and is considered a general-purpose bit. Carbide buttons are well suited for the impact action that occurs in sonic drilling. Other configurations include welded carbide chips and blocks in a matrix, saw tooth shapes both hard surfaced and plain, and tearing shoe designs with large irregular carbides for working in construction debris and penetrating refuse in landfills. Each of these designs has a useful purpose and can be quite effective at penetrating their respective formations.

7.2.4 *Sample Barrel Bit*—The sample barrel bit is designed to both penetrate the formation and to shape the sample so it will pass through the bit into the sample barrel with the least amount of friction or compression. The bit may be constructed with serrated, carbide buttoned, or some other form of roughened inside diameter surface, or with a machined space for a retainer basket to assist in the retention of the sample. The interior of the sampler bit should have a minimum inside diameter 3.175 mm (0.125 in.) less than the inside diameter of the sampling barrel to allow the passage of the sample into the core barrel with the least amount of resistance so as to not impede recovery or create unnecessary disturbance to the sample. The cutting face of the bit used should be the design best suited to the formation being penetrated. For dense formations with cobbles and boulders a bit face with carbide buttons may be used. For soft formations a serrated face, sharpened to force the cuttings away from the bit, works well. The choice of bit face type and sample retention method is governed by the characteristics of the formation and should be optimized as the borehole progresses to insure the highest recovery percentage with the least possible sample disturbance.

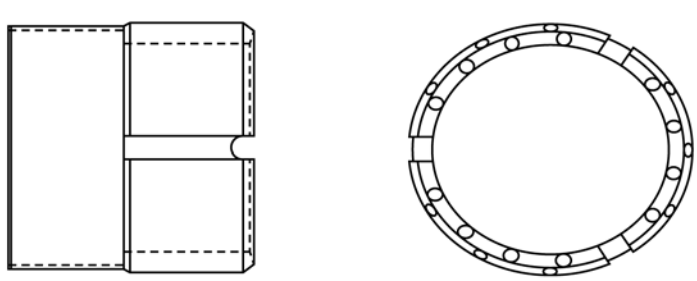

FIG. 4 Sonic Casing Bit

Copyright by ASTM Int'l (all rights reserved); Fri Oct 16 11:58:49 EDT 2015
Downloaded/printed by
Chris Torell (none) pursuant to License Agreement. No further reproductions authorized.

7.2.5 *Direct Push Sampling Tools*—Sonic drilling is a direct push drilling method as well. Therefore, soil sampling, soil vapor sampling, and water sampling tools similar to those used in the direct push industry are also available to the sonic drilling practice. *In-situ* water sampling tools are constructed using a screened inner stem attached to a point that is surrounded by an outer drive pipe. The point is the same diameter as the outer drive pipe to prevent the creation of an enlarged annular space that could provide an avenue for cross contamination between aquifers. The inner screen assembly is sealed from the formation during installation by an outer drive pipe fitted with "o" rings. With the friction of the soil holding the point in place while being driven to depth, the screen section is then exposed to the formation by pulling back on the outer drive pipe. The inner tube can have an inside diameter of 5.08 cm (2.0 in.) to 10.16 cm (4.0 in.) or larger to allow for larger capacity sampling pumps. Using higher capacity pumps accelerates the purging process and allows for rapid sampling from deep formations. The water sampling probes can be fitted with disposable points to allow for pressure grouting or installation of small diameter monitor wells.

7.3 *Sonic Drill Rig*—The sonic drill rig is similar to other drilling rigs in that it is a machine attached to a frame mounted on some form of carrier. The unit can be driven by a power take off assembly from the carrier engine or by an auxiliary engine. The unit has a feed frame for moving the drill head up and down to apply feed and retract pressure to the drill string and a mast for tool handling. Some units are equipped with automated tool handling devices. The sonic drill head is powered hydraulically. In addition to the sonic head, the feed system, drill fluid pumps, rod handling systems, and other auxiliary equipment demand power as well. Therefore, the power supply must be capable of providing the horsepower necessary to drive the system. The horsepower requirement is based on the desired productive capacity of the drill. The carrying vehicle must have sufficient gross vehicle weight to support the drill structure, rod handling equipment, fluid pumps, air compressors, and such tool storage as deck space allows.

7.3.1 *Drill Tower*—The drill rig may have a tower for extracting tools from the borehole. Tower lengths can vary, however, higher towers allow for longer tool pulls. The drill rig should have sufficient retraction power to lift a full-length string of the largest rated diameter drill tools from the deepest rated depth plus an additional 50 % or more of that total weight.

7.3.2 *Tool Handling*—Sonic drills traditionally use several different sizes of tooling. The units are generally equipped with some form of tool handling devices. Some units are equipped with a pivotal sonic head. This allows the head to tilt up 90 degrees to vertical so drill rod or casing can be aligned to the spindle for mechanical attachment. The length is then raised and rotated back to vertical for attachment to the drill string. Other units use mechanical rod loaders which position drill rods or casing for hook up. Wire rope winches can be used for drill rod tripping. Units using the winch method are generally fitted with a slide tray that can accommodate up to 6.096 m (20.0 ft) lengths of drill rod for reducing sample barrel retrieval time.

7.3.2.1 *Tool Joint Wrench and Rod Holder Table*—A key component of the sonic drill is the tool joint make-up, breakout, and rod holding table. The upper vice of the tool joint should be capable of bi-directional rotation to both close and open the tool joints. The throat of the joint wrench must be large enough to accommodate the largest rated O.D. tooling of the drill. The throat clearance may be accomplished by jaw retraction or by installing different sized jaws. The lower jaw assembly and its supporting members should be capable of supporting the total weight of the maximum O.D tooling at the maximum depth rating of the machine. The upper jaw may include some form of high-speed rod spinning device to expedite rod disconnection.

7.3.3 *Auxiliary Equipment*—Sonic drill units require a fluid pump or pumps depending on the anticipated work program. The pumps serve many purposes; to push drilling fluids down the bore hole for lubrication and bit face cuttings removal while advancing the outer casing over core barrels in certain formations, when rock drilling to assist in the removal of cuttings, for bit cooling and cuttings removal while diamond bit rock coring, for mixing of drill fluids and grouts, for grouting of instrumentation, to grout (backfill) bore holes, and for equipment cleaning. Drill fluid injection is generally more predominate when installing casing in saturated granular formations to maintain pressure equalization than when drilling more cohesive formations. The primary purpose of injecting fluids is to keep the inside of the drilling casing clean as it is advanced over the sampling barrel. Normally drill fluids are not recycled during sonic drilling so volume generated is generally small. As the sonic drilled borings can go to considerable depth it is recommended that the unit have a least one positive displacement type pump. If a second fluid pump is desired, it should be capable of supplying 1380 kN/m^2 (200 psi) for mixing and for cleaning. Progressive cavity, or peristaltic pumps, work well for this purpose. All fluid pumps should be equipped with pressure indicating gauges and pressure relief valves set at the necessary level to protect the pumps from damage and to prevent fracturing of the formation. Air compressors are sometimes used in conjunction with sonic drilling. They are utilized when operating down hole hammers or other air drilling methods to penetrate formations not conducive to penetration by sonic methods. Pressure requirements are governed by tool requirements, depth, and bore diameter, see Guide D3740. General tools needed to operate the sonic drill unit include rod lifting tools, pipe wrenches, fluid swivels, and handtools for general maintenance and repair. Other useful equipment would include portable or hydraulic powered arc welders, acetylene torches, steam cleaners, and portable generators. Portable fluid pumps and tanks are also useful for fluid containment and transfer.

7.4 *Expendable Supplies*—Expendable supplies are items such as monitor well materials, bentonite, cement, and their proper uses are described in referenced ASTM standards. They are not addressed in this practice.

Copyright by ASTM Int'l (all rights reserved); Fri Oct 16 11:58:49 EDT 2015
Downloaded/printed by
Chris Torell (none) pursuant to License Agreement. No further reproductions authorized.

8. Conditioning

8.1 *General*—Preparation of the sonic rotary drill unit for project work starts with a thorough check of the drill's operating system. This includes the inspection, testing, and repair of all emergency shutdown switches and other safety devices. The performance of regular routine maintenance procedures including fluid level checks, lubrication, hydraulic hose inspection, leakage repairs, and the inspection of the physical components with necessary repairs completed. A thorough cleaning of the drill unit is also recommended. Operating tools should be inspected, repaired if necessary, and inventoried, to insure that an adequate supply is on hand for the project. Drilling tools, casing, rods, bits, etc., should be checked for proper repair, and loaded in sufficient quantities to complete the project. It is recommended that additional tooling, beyond that required for the project, be taken to the site to reduce down time from breakage or damage, and to allow for increases in work effort that may occur because of site conditions.

NOTE 2—The items in Section 8 regarding inspection, cleaning, inventory, repair, storage, transportation, decontamination, equipment checks, and necessary supplies are primarily related to contractor efficiency. This is only a partial list of activities that are considered good drilling practice to prepare for drilling and are offered for consideration by users. It is recognized that strict conformance with these items is not imperative for sonic drilling and does not necessarily correlate to the quality of the work.

8.1.1 *Equipment Movement*—All tools, materials, and equipment needed for the project shall be loaded in a safe manner and secured in compliance with U.S. Department of Transportation, state, and local regulations. The drilling rig, support vehicles, and auxiliary equipment shall be brought to the project site fully fueled and ready for operation. Extra tooling, required instrumentation installation supplies, and other expendables should be stored in a central location in a safe and secure manner. The materials should be stored in a clean dry area in their original containers until transported to the decontamination area for cleaning if necessary or to the actual drill site for installation. All packaging debris, damaged or contaminated materials, and miscellaneous trash accumulate during drilling operations shall be containerized and disposed of properly.

8.2 *Decontamination*—If the drilling rig and tooling are to be used on a chemically contaminated site, site specific decontamination procedures must be followed. For general decontamination information refer to Practice D5088 for recommended procedures.

8.3 *Sampling Barrels*—The sampling barrels are in various lengths, generally 1.532 m (5.0 ft), 3.048 m (10 ft), or 6.096 m (20 ft). Barrels should be in equal increments to facilitate the accuracy of borehole depth measurements. Sampling barrels are either solid or split styles.

8.3.1 *Solid Sampling Barrels*—Check the barrel thread section for thread condition, dents, kinks, or excessive wear that could result in the loss of the barrel or the sampling shoe, or in improper assembly that will result in a reduction of energy transfer. The barrel body should be straight, without dents or wrench burrs that could cause injury. The inside of the barrel should be clean, free of any debris, rust build-up, or any obstructions.

8.3.2 *Split Sampling Barrels*—Check barrel thread section for thread condition, dents, kinks or excessive wear that could result in the loss of the barrel or sampling shoe, or in improper assembly that will result in a reduction of energy transfer. The barrel body sections should be straight, without dents, kinks, or wrench burrs that could cause injury. The split tongue and grooves must be clean and free from dents, kinks or burrs. The split barrels halves should fit together snugly without bowing or spreading. The inside of the barrel halves must be clean and free of any obstructions.

8.3.3 *Sampler Barrel Heads and Bits*—Sampler barrel heads should be checked for thread condition to insure proper assembly to facilitate energy transfer. Sampler barrel bits are constructed in different configurations for use in the various formations encountered. The proper bit should be selected for the anticipated formation to be encountered. The cutting face should be free of dents, without cracks, non-manufactured grooves, or indentations. The interior of the bit should be free of obstructions that would impede the movement of the sample in the barrel. Designs in the bit to aid in recovery are permitted. Bits designed for use with basket retainers should have clean undamaged shoulders for receiving basket retainers. Check to see that the required tolerance is present.

8.3.4 *Drilling Without Sampling*—When sonic drilling without sampling is desired the solid sampling barrel bit can be modified to incorporate a drive point. When the maximum boring depth is reached, the sampling barrel is over drilled with the casing to depth and the sampling barrel is removed before setting instrumentation. If a disposable drive point is used, the sampling barrel is withdrawn the length of the point and the point knocked out. Then borehole activities such as water sampling and setting monitor wells or other devices can be accomplished.

8.3.5 *Tool Selection*—Prior to dispatch to the project site, an inventory of the necessary tooling in the proper sizes, expendable items, and instrumentation supplies should be made. Drilling is an inexact science and as such planning should include provisions for possible contingencies that may arise based on the knowledge one can gather about the project and the geology of the site. Routinely used supplies such as drill casing and sample barrel bits, rod lifters, environmentally safe thread lubrication, sampler barrel couplers, and project specific materials should be available so work can proceed unimpeded. If using split barrels or thin wall tubes a sufficient number should be on hand so sample examination does not delay drilling. Expendable supplies such as sample retainer baskets, sample storage bags, or other containers, and other project specific materials should to be available in sufficient quantities so work can progress smoothly. Specialized sampling tools, necessary for project specific requirements, should be checked, cleaned and available in the required number. Refer to Guide D420 for additional information on soil sampling tool selection. Materials for proper sealing of boreholes should always be available at the site.

Copyright by ASTM Int'l (all rights reserved); Fri Oct 16 11:58:49 EDT 2015
Downloaded/printed by
Chris Torell (none) pursuant to License Agreement. No further reproductions authorized.

9. Procedure

9.1 *General Set Up*—A safety meeting and site/project information meeting is held. A complete set of job safety analyses procedures is reviewed; Utility clearance information is reviewed. The drill crew puts on the required personal protective safety gear. The drill foreman makes a general site reconnaissance and specifically reviews the borehole location before moving any equipment onto the site. All underground and overhead utilities locations are checked and all members of the drill crew receive knowledge of their whereabouts. Any overhead obstructions that may impede drill rig setup and operation are noted. The travel path to the boring location is evaluated for the safe movement of the equipment. Move the drill rig and service vehicles to the borehole location. Unload any auxiliary equipment or supplies from the drill that would interfere with the rig setup. Level the drill unit. The leveling jacks should have sufficiently sized ground contact pads to spread the load and prevent settling during drilling that can cause misalignment of the drill tools. Once the drill is level, raise and secure the mast. If drilling fluids are to be collected position a fluid containment vessel. Position the service vehicles as necessary for efficient tool handling and drilling support. Hook up any pumps, hoses, and position working tools as necessary.

9.1.1 *Drilling Methods*—Sonic drilling can be performed wet, using a drilling medium, or dry. The choice of method is determined by project requirements, formations to be penetrated, and the depth to be achieved. In sonic drilling, the sampling barrel is advanced dry except for those occasions when actual rock or concrete penetration is occurring and drill-cutting removal is necessary to prevent tool lockup. Bouldery formations and weathered bedrock can be drilled dry as long as they will allow the cuttings at the bit face to be forced into the formation without friction causing excessive heat or impeding penetration of the formation. Drilling progresses by fracturing, shearing, or displacement. Fracturing occurs when drilling through formations with cobbles, boulders, or rock formations. Shearing occurs when penetrating dense silt, clay, or soft shale. Displacement occurs in granular formations when the material is liquefied and moves away from the bit and casing, or up the casing or sampling barrel. In sonic drilling, as in other drilling practices, a combination of methods may be necessary to complete the project.

9.1.2 *Tool Preparation*—Attach the proper bit for the formation anticipated to the sampling barrel. Connect the sampling barrel to the drill head and tighten the drill bit and the sampling barrel to the drill head. Check the plumb of the casing in relation to the drill rig. The pre-torquing, or tightening of rod joints is essential to the transmission of energy through the rod string when using sonic technology. All drill rod and casing joints should be pre-torqued to the manufactures rated capacity and/or to a level equal to the maximum amount of force that the sonic head can impart. Failure to do so can result in a loss of energy as well as damage to the threaded joint and/or loss of tooling. It is generally necessary to rotate the drilling casing to provide for even bit wear, control borehole alignment, and to facilitate removal of the casing and samplers from the borehole on completion. Slow rotation speed is satisfactory as speed is not a controlling factor in advancing the tools. In certain formations rotation of the sampling barrel during core sampling may be necessary.

9.2 *Sample Barrel Insertion*—Advance the sample barrel into and through the topsoil, pavement, or other surface material. Withdraw the sampler from the borehole and remove initial penetration material. Reinsert the sampling barrel, apply down pressure, activate the sine generator, and began rotation if needed. Note bottom limit of penetration and adjust as needed by using various rod lengths to achieve desired sampling increment end point. It is desirable to end sample increments at the even meter (foot), or centimeter (one-half foot) increments for ease of bore hole measurements. Accurate measurements are critical to determine recovery, locate strata changes, and determine proper instrumentation location in the borehole.

9.2.1 *Sampling-Solid Barrel*—At the completion of the sampling run, stop down pressure, stop the sine generator and any rotation of the sampling barrel. If necessary disconnect from the sampling barrel and install casing over the sampling barrel. Extract the sampling barrel from the borehole using the drill head or such other method as will expedite the movement of the sampling barrel to the surface. At the surface, reattach the sampling barrel to the sine generator and position the sampling barrel to remove the sample. Remove the bit, protecting the bottom of sampling barrel to prevent any material from dropping out. Remove any material in the sampling bit and place it in the sample receiving bag in the correct orientation. Slide the sample bag over the sampling barrel the full remaining length of the bag so the sample does not fall. Allow the sample to flow into the bag by activating the sine generator as needed to vibrate the sample from the barrel. Keep the sample bag as close to the bottom of the sample barrel as possible while it fills to reduce sample dropping distance causing as little disturbance as possible. Samples are generally deposited in 61 m (2.0 ft) to 1.524 m (5.0 ft) length plastic bags for review, logging and analysis. Sample bag length should not exceed 1.524 m (5.0 ft) as the weight of the specimen collected becomes very difficult to handle without causing excessive disturbance. Change sample bags as needed until all sample is removed from the barrel. It is important that all material collected be contained for recovery measurements and for disposal. Accurate measurements of sample recovery are achievable with the solid barrel sampling method of sample collection if certain practices are followed. In some formations more precise measurements of recovery can be made using clear plastic sampler liners. Hydraulic extraction of the sample from the solid barrel sampler can also be utilized in some formations. The nature of sonic vibration and bit face displacement can cause some disturbance in granular and in other soils. This should be kept in mind when measuring recovery and examining core samples. Such measurements are best judged by experienced equipment operators and knowledgeable field logging personnel who are knowledgeable in recognizing the differences in disturbed verses non-disturbed formation materials. Clean the sampling barrel by flushing with clean water or decontaminating as necessary. If project needs require full

Copyright by ASTM Int'l (all rights reserved); Fri Oct 16 11:58:49 EDT 2015
Downloaded/printed by
Chris Torell (none) pursuant to License Agreement. No further reproductions authorized.

decontamination remove the used sampling barrel to the decontamination area, attach a cleaned sampling barrel to the drill head, add the drill bit and tighten it, and reinsert the sample barrel into the borehole to the depth of the previously sampled increment. Repeat the sampling process. It may be advantageous to rotate the sampling barrel as is withdrawn from the borehole to aid in extraction. However, rotation during extraction should only be used when necessary to retrieve the sampling tools to avoid disturbing the sample or causing it to fall from the sampling barrel. In some formations it may be necessary to activate the sine generator to facilitate withdrawal of the sample barrel. Once the sample is collected however, any action applied could cause disturbance to the sample. All such actions should be avoided wherever possible.

9.2.2 *Sampling-Split Barrel*—The procedure for using split barrel samplers is the same as solid barrel samplers except that the split barrel design it is not able to accept heavy down pressure or high friction resistance rotation. The limits of the split barrel are easily exceeded and caution must be exercised when utilizing these tools. Split barrel samplers offer the potential for reducing sample disturbance as the sample is removed from the core barrel. Sample removal and cleaning follow the procedures in referenced ASTM standards. Measuring sample recovery may be more accurate with the split barrel as result of generally shorter run length and the ability to visibly observe the material being measured in the barrel before it is removed.

9.3 *Drilling with Casing*—It is generally necessary to stabilize the borehole with an outer casing to control caving or slough, to facilitate sample collection, to protect against aquifer cross contamination, to provide a controlled environment for well or instrumentation installation, and to insure proper bottom up grouting. Casing is either installed using drilling fluid or installed dry depending on the formation being penetrated. Casing is available in a variety of lengths and diameters common to the drilling industry to fit a range of project requirements. The casing is either advanced over the sampling barrel when using drilling fluid or after the sample barrel has been removed from the borehole when drilling dry. Proportional sizing of the sampling barrel to the casing is required to insure that the casing is properly cleaned.

9.3.1 *Drilling Casing Wet*—Various drilling fluids can be used to advance the casing ranging from clean potable water to specialized drilling fluids. The choice of fluid is dictated by the formation and the project requirements. There is generally no recirculation of the drilling fluid during sonic drilling. The drilling fluid serves several functions. It helps keep debris and drill cuttings from entering the casing; it provides a lubrication film between the outside of the casing and the formation materials; It removes drill cuttings from the face of the bit and from the borehole annulus; and the fluid helps to keep the sample barrel and the casing from becoming sand locked as the casing passes over the barrel. It is important that the annular space between the sampler barrel and the casing bit be kept to a minimum. This prevents material from moving into the annular space, reduces the amount of drilling fluid needed, and helps maintain borehole alignment. The drilling fluid is also used to maintain a pressure equalization head inside the casing to prevent any inflow of formation materials.

9.3.1.1 *Casing Insertion Wet*—The sampling barrel is advanced to the required depth increment as described previously. The drill head is disconnected from the sampling rod string. A plug is placed in the drill rod box to protect the threads and prevent any drill fluid from entering the sampling rod string. An equal length of drill casing is attached to the drill head and hoisted into position over the sampling rod string. As the casing is advanced using downpressure, rotation and vibration, drilling fluid is pumped into the casing string. The casing is advanced to the base of the sampling barrel shoe. Advancement is stopped. The drill head is disconnected from the casing and reconnected to the sampling barrel tool string. The sampling barrel is then removed and the sample extracted. The sampling barrel is cleaned and then reinserted, additional drill string added, and the sample barrel advanced to the next increment. Then the casing installation procedure is repeated. There is a slight amount of contact between the top of the sampling increment and the drilling fluid when the sample barrel is withdrawn. However, as no drilling fluid is recycled, the composition of the drilling fluid remains known and controlled. As soon as the sample specimen begins to enter the barrel the fluid in the barrel is pushed upward and the sides of the sample barrel are sweep clean by the friction of the passing soil.

9.3.1.2 *Bore Hole Slough or Cave-In*—As with all drilling methods there are times when special techniques are needed to maintain control of the bore hole. In certain formations, if the head pressure in the borehole is not equalized, the groundwater will carry formation materials in as it equalizes in the borehole. If project constraints do not allow the adding of compensating fluids other techniques must be employed. To provide room for the deposited material a second sampling barrel can be added on top of the first. As the materials are essentially liquefied along the barrel surface there is relatively little influence exerted on the lower portions of the sample from the upper portions. However, to insure sample quality and integrity every effort should be made to eliminate as much cave-in as possible.

9.3.1.3 *Drilling Casing Dry*—When installing casing dry, advance the sampling barrel through the scheduled interval. Remove the sample barrel and process the sample. Connect the drill head to the casing and advance the casing to the bottom of the previously sampled increment. Disconnect from the casing. Insert the sample barrel and vibrate through the borehole material in the casing to the top of the next scheduled sampling increment. Remove the sampling barrel and clean it in accordance with project requirements. Reinsert the sampling barrel and advance it to the end of the next sampling increment. Then repeat the procedure. In certain formations a double length sample barrel can be utilized to both remove the borehole material and to continuously sample the next increment in one tool trip. Whenever slough is encountered in the borehole it should be measured and properly noted on the boring log. Determining the need for cleanout runs with the core barrel is primarily a driller skill.

Copyright by ASTM Int'l (all rights reserved); Fri Oct 16 11:58:49 EDT 2015
Downloaded/printed by
Chris Torell (none) pursuant to License Agreement. No further reproductions authorized.

9.4 *Bore Hole Testing*—The sonic drilling method lends itself well to many forms of borehole testing in most formations primarily because of the clean cased hole provided and from the versatility of the machine. Actual procedures for water and aquifer testing, or other formation properties investigation procedures are given in referenced ASTM standard and will not be individually addresses here. The very high level of energy that can be imparted to the drill bit by the sonic drill gives it the ability to advance casing and core barrels into very dense formations. In these dense formations, when drilling dry, the borehole wall may be affected by the forcing of soil particles into it. Should this condition be of concern it can be alleviated by using potable water injection while advancing the casing, by using a crowd in style bit that directs materials sheared from the borehole wall into the casing, by borehole wall scraping with the casing bit, or by injecting natural clay breakdown compounds.

9.4.1 Pump testing to determine aquifer characteristics, Test Method D4050, is easily accomplished because of the clean hole and the minimal disturbance that is caused to the formation. This results in a rapidly clearing formation that reaches its maximum production rate quickly. Minimum turbidity with rapid production results in less development water for disposal and expedited test results. This is especially significant when setting smaller diameter wells, which can only accommodate low volume pumps. Slug tests, Test Method D4044, can also readily be preformed because of the clean borehole wall.

9.4.2 *Well Installation*—Wells, Practice D5092, of various sizes can be set using the sonic method. Advantages are that in many formations the casing in the screened zone can be set without fluid to keep the formation clean and to reduce development and/or pumping time. The vibratory effect can be used to good advantage to settle filterpack material around the screen and eliminate bridging of backfill materials as the casing is removed.

9.4.3 *Other Instrumentation*—Any type of instrumentation that can be set with any other drilling method can be set with sonic drilling. *In-situ* borehole tests such as pressure meters D4719, vane shear devices D2573, permeability testing using packers D4630, etc., can be used with the sonic method as long as the borehole wall is prepared in accordance with the proper ASTM standard. When utilizing these types of testing methods it may be necessary to advance the casing into the borehole using water injection and a crowd in bit to minimize sonic drilling's effect on soil pore pressure.

9.5 *Incorporating Other Drilling Practices*—The sonic drill rig easily accommodates other drilling methods should they be needed to satisfactorily complete projects. Rock coring adaptations can be incorporated to do diamond bit coring either wireline or conventional. Sonic drills generally have low rotary rpm ratings. Adequate speeds for rock coring can be acquired through a gear driven speed multiplier, a high-speed coring head, 2-speed rotation motors, or if available, adjustment to the rotational output of the sonic drill head. Downhole hammers can be readily adapted to the sonic drill with the incorporation of a compressed air source. The low rpm rating works very well with downhole hammer. As the sonic drill offers all basic drill functions air or fluid rotary techniques can be easily adapted as well. Standard soil sampling techniques can be utilized with the sonic drill. Split barrel sampling with standard penetration tests, thin walled tubes, and the like can be easily incorporated.

10. Completion and Sealing

10.1 Information on the sealing of boreholes can be found in Guide D5299, and in Guides D5791, D5782, D5783, and D5784. State or local regulations may control both the method and the materials for borehole sealing.

11. Record Keeping

11.1 *Field Report*—The field report may consist of boring log or a report of the sampling event and a description of the sample. Soil samples can be classified in accordance with Practice D2488 or other methods as required for the investigation. Prepare the log in accordance with Guide D5434, which lists the parameters required for the field investigation program. List all information related to drilling and the sampling event, including depth, fluid injection, drilling parameters, sampling Intervals, recovery, strength index readings such as pocket pentrometer, classification of soil, and any comments on sampler or casing advancement. If a computer collects drill performance data, add identifying marks to log so correct information can be downloaded and incorporated into the final log as necessary.

12. Keywords

12.1 drilling; resonance; soil and rock sampling; sonic; subsurface exploration

ASTM International takes no position respecting the validity of any patent rights asserted in connection with any item mentioned in this standard. Users of this standard are expressly advised that determination of the validity of any such patent rights, and the risk of infringement of such rights, are entirely their own responsibility.

This standard is subject to revision at any time by the responsible technical committee and must be reviewed every five years and if not revised, either reapproved or withdrawn. Your comments are invited either for revision of this standard or for additional standards and should be addressed to ASTM International Headquarters. Your comments will receive careful consideration at a meeting of the responsible technical committee, which you may attend. If you feel that your comments have not received a fair hearing you should make your views known to the ASTM Committee on Standards, at the address shown below.

This standard is copyrighted by ASTM International, 100 Barr Harbor Drive, PO Box C700, West Conshohocken, PA 19428-2959, United States. Individual reprints (single or multiple copies) of this standard may be obtained by contacting ASTM at the above address or at 610-832-9585 (phone), 610-832-9555 (fax), or service@astm.org (e-mail); or through the ASTM website (www.astm.org). Permission rights to photocopy the standard may also be secured from the Copyright Clearance Center, 222 Rosewood Drive, Danvers, MA 01923, Tel: (978) 646-2600; http://www.copyright.com/

Copyright by ASTM Int'l (all rights reserved); Fri Oct 16 11:58:49 EDT 2015
Downloaded/printed by
Chris Torell (none) pursuant to License Agreement. No further reproductions authorized.

Designation: D 2488 – 00

Standard Practice for Description and Identification of Soils (Visual-Manual Procedure)[1]

This standard is issued under the fixed designation D 2488; the number immediately following the designation indicates the year of original adoption or, in the case of revision, the year of last revision. A number in parentheses indicates the year of last reapproval. A superscript epsilon (ϵ) indicates an editorial change since the last revision or reapproval.

This standard has been approved for use by agencies of the Department of Defense.

1. Scope *

1.1 This practice covers procedures for the description of soils for engineering purposes.

1.2 This practice also describes a procedure for identifying soils, at the option of the user, based on the classification system described in Test Method D 2487. The identification is based on visual examination and manual tests. It must be clearly stated in reporting an identification that it is based on visual-manual procedures.

1.2.1 When precise classification of soils for engineering purposes is required, the procedures prescribed in Test Method D 2487 shall be used.

1.2.2 In this practice, the identification portion assigning a group symbol and name is limited to soil particles smaller than 3 in. (75 mm).

1.2.3 The identification portion of this practice is limited to naturally occurring soils (disturbed and undisturbed).

NOTE 1—This practice may be used as a descriptive system applied to such materials as shale, claystone, shells, crushed rock, etc. (see Appendix X2).

1.3 The descriptive information in this practice may be used with other soil classification systems or for materials other than naturally occurring soils.

1.4 The values stated in inch-pound units are to be regarded as the standard.

1.5 *This standard does not purport to address all of the safety problems, if any, associated with its use. It is the responsibility of the user of this standard to establish appropriate safety and health practices and determine the applicability of regulatory limitations prior to use.* For specific precautionary statements see Section 8.

1.6 *This practice offers a set of instructions for performing one or more specific operations. This document cannot replace education or experience and should be used in conjunction with professional judgment. Not all aspects of this practice may be applicable in all circumstances. This ASTM standard is not intended to represent or replace the standard of care by which the adequacy of a given professional service must be judged, nor should this document be applied without consideration of a project's many unique aspects. The word "Standard" in the title of this document means only that the document has been approved through the ASTM consensus process.*

2. Referenced Documents

2.1 *ASTM Standards:*

D 653 Terminology Relating to Soil, Rock, and Contained Fluids[2]

D 1452 Practice for Soil Investigation and Sampling by Auger Borings[2]

D 1586 Test Method for Penetration Test and Split-Barrel Sampling of Soils[2]

D 1587 Practice for Thin-Walled Tube Sampling of Soils[2]

D 2113 Practice for Diamond Core Drilling for Site Investigation[2]

D 2487 Classification of Soils for Engineering Purposes (Unified Soil Classification System)[2]

D 3740 Practice for Minimum Requirements for Agencies Engaged in the Testing and/or Inspection of Soil and rock as Used in Engineering Design and Construction[3]

D 4083 Practice for Description of Frozen Soils (Visual-Manual Procedure)[2]

3. Terminology

3.1 *Definitions*—Except as listed below, all definitions are in accordance with Terminology D 653.

NOTE 2—For particles retained on a 3-in. (75-mm) US standard sieve, the following definitions are suggested:
Cobbles—particles of rock that will pass a 12-in. (300-mm) square opening and be retained on a 3-in. (75-mm) sieve, and
Boulders—particles of rock that will not pass a 12-in. (300-mm) square opening.

3.1.1 *clay*—soil passing a No. 200 (75-µm) sieve that can be made to exhibit plasticity (putty-like properties) within a range of water contents, and that exhibits considerable strength when air-dry. For classification, a clay is a fine-grained soil, or the

[1] This practice is under the jurisdiction of ASTM Committee D-18 on Soil and Rock and is the direct responsibility of Subcommittee D18.07 on Identification and Classification of Soils.

Current edition approved Feb. 10, 2000. Published May 2000. Originally published as D 2488 – 66 T. Last previous edition D 2488 – 93$^{\epsilon 1}$.

[2] *Annual Book of ASTM Standards*, Vol 04.08.

[3] *Annual Book of ASTM Standards*, Vol 04.09.

***A Summary of Changes section appears at the end of this standard.**

Copyright © ASTM International, 100 Barr Harbor Drive, PO Box C700, West Conshohocken, PA 19428-2959, United States.

fine-grained portion of a soil, with a plasticity index equal to or greater than 4, and the plot of plasticity index versus liquid limit falls on or above the "A" line (see Fig. 3 of Test Method D 2487).

3.1.2 *gravel*—particles of rock that will pass a 3-in. (75-mm) sieve and be retained on a No. 4 (4.75-mm) sieve with the following subdivisions:

coarse—passes a 3-in. (75-mm) sieve and is retained on a ¾-in. (19-mm) sieve.

fine—passes a ¾-in. (19-mm) sieve and is retained on a No. 4 (4.75-mm) sieve.

3.1.3 *organic clay*—a clay with sufficient organic content to influence the soil properties. For classification, an organic clay is a soil that would be classified as a clay, except that its liquid limit value after oven drying is less than 75 % of its liquid limit value before oven drying.

3.1.4 *organic silt*—a silt with sufficient organic content to influence the soil properties. For classification, an organic silt is a soil that would be classified as a silt except that its liquid limit value after oven drying is less than 75 % of its liquid limit value before oven drying.

3.1.5 *peat*—a soil composed primarily of vegetable tissue in various stages of decomposition usually with an organic odor, a dark brown to black color, a spongy consistency, and a texture ranging from fibrous to amorphous.

3.1.6 *sand*—particles of rock that will pass a No. 4 (4.75-mm) sieve and be retained on a No. 200 (75-µm) sieve with the following subdivisions:

coarse—passes a No. 4 (4.75-mm) sieve and is retained on a No. 10 (2.00-mm) sieve.

medium—passes a No. 10 (2.00-mm) sieve and is retained on a No. 40 (425-µm) sieve.

fine—passes a No. 40 (425-µm) sieve and is retained on a No. 200 (75-µm) sieve.

3.1.7 *silt*—soil passing a No. 200 (75-µm) sieve that is nonplastic or very slightly plastic and that exhibits little or no strength when air dry. For classification, a silt is a fine-grained soil, or the fine-grained portion of a soil, with a plasticity index less than 4, or the plot of plasticity index versus liquid limit falls below the "A" line (see Fig. 3 of Test Method D 2487).

4. Summary of Practice

4.1 Using visual examination and simple manual tests, this practice gives standardized criteria and procedures for describing and identifying soils.

4.2 The soil can be given an identification by assigning a group symbol(s) and name. The flow charts, Fig. 1a and Fig. 1b for fine-grained soils, and Fig. 2, for coarse-grained soils, can be used to assign the appropriate group symbol(s) and name. If the soil has properties which do not distinctly place it into a specific group, borderline symbols may be used, see Appendix X3.

NOTE 3—It is suggested that a distinction be made between *dual symbols* and *borderline symbols.*

Dual Symbol—A dual symbol is two symbols separated by a hyphen, for example, GP-GM, SW-SC, CL-ML used to indicate that the soil has been identified as having the properties of a classification in accordance with Test Method D 2487 where two symbols are required. Two symbols are required when the soil has between 5 and 12 % fines or when the liquid limit and plasticity index values plot in the CL-ML area of the plasticity chart.

Borderline Symbol—A borderline symbol is two symbols separated by a slash, for example, CL/CH, GM/SM, CL/ML. A borderline symbol should be used to indicate that the soil has been identified as having properties that do not distinctly place the soil into a specific group (see Appendix X3).

5. Significance and Use

5.1 The descriptive information required in this practice can be used to describe a soil to aid in the evaluation of its significant properties for engineering use.

5.2 The descriptive information required in this practice should be used to supplement the classification of a soil as determined by Test Method D 2487.

5.3 This practice may be used in identifying soils using the classification group symbols and names as prescribed in Test Method D 2487. Since the names and symbols used in this practice to identify the soils are the same as those used in Test Method D 2487, it shall be clearly stated in reports and all other appropriate documents, that the classification symbol and name are based on visual-manual procedures.

5.4 This practice is to be used not only for identification of soils in the field, but also in the office, laboratory, or wherever soil samples are inspected and described.

5.5 This practice has particular value in grouping similar soil samples so that only a minimum number of laboratory tests need be run for positive soil classification.

NOTE 4—The ability to describe and identify soils correctly is learned more readily under the guidance of experienced personnel, but it may also be acquired systematically by comparing numerical laboratory test results for typical soils of each type with their visual and manual characteristics.

5.6 When describing and identifying soil samples from a given boring, test pit, or group of borings or pits, it is not necessary to follow all of the procedures in this practice for every sample. Soils which appear to be similar can be grouped together; one sample completely described and identified with the others referred to as similar based on performing only a few of the descriptive and identification procedures described in this practice.

5.7 This practice may be used in combination with Practice D 4083 when working with frozen soils.

NOTE 5—Notwithstanding the statements on precision and bias contained in this standard: The precision of this test method is dependent on the competence of the personnel performing it and the suitability of the equipment and facilities used. Agencies that meet the criteria of Practice D 3740 are generally considered capable of competent and objective testing. Users of this test method are cautioned that compliance with Practice D 3740 does not in itself assure reliable testing. Reliable testing depends on several factors; Practice D 3740 provides a means for evaluating some of those factors.

6. Apparatus

6.1 *Required Apparatus*:

6.1.1 *Pocket Knife or Small Spatula*.

6.2 *Useful Auxiliary Apparatus*:

6.2.1 *Small Test Tube and Stopper* (or jar with a lid).

6.2.2 *Small Hand Lens*.

7. Reagents

7.1 *Purity of Water*—Unless otherwise indicated, references

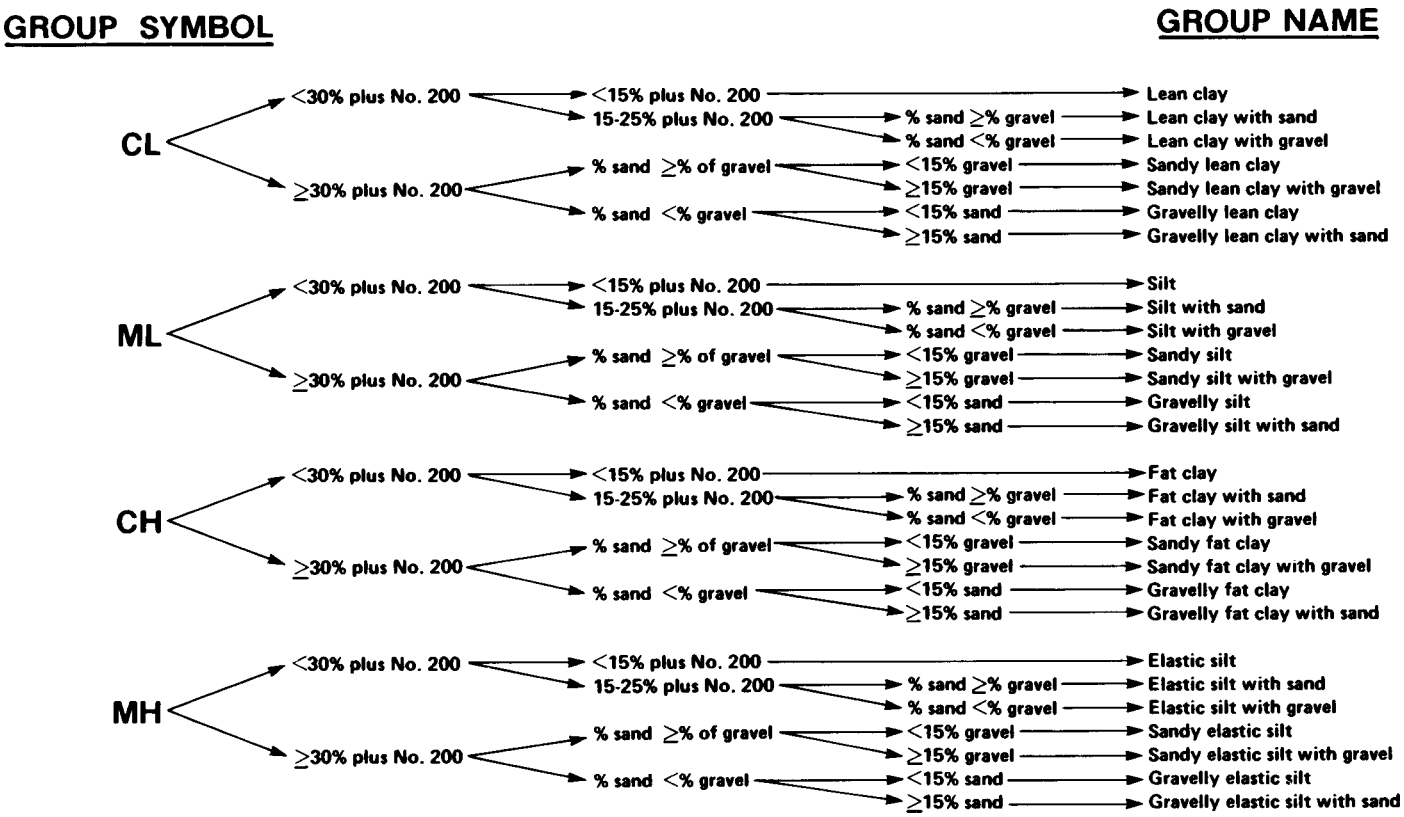

NOTE 1—Percentages are based on estimating amounts of fines, sand, and gravel to the nearest 5 %.

FIG. 1a Flow Chart for Identifying Inorganic Fine-Grained Soil (50 % or more fines)

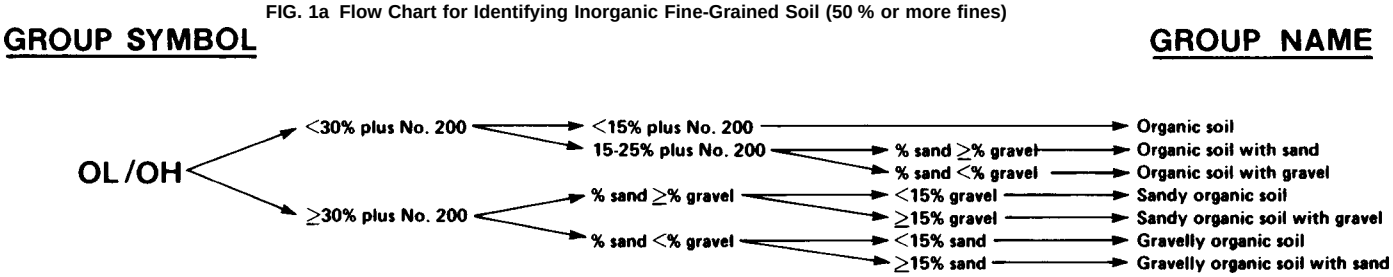

NOTE 1—Percentages are based on estimating amounts of fines, sand, and gravel to the nearest 5 %.

FIG. 1 b Flow Chart for Identifying Organic Fine-Grained Soil (50 % or more fines)

to water shall be understood to mean water from a city water supply or natural source, including non-potable water.

7.2 *Hydrochloric Acid*—A small bottle of dilute hydrochloric acid, HCl, one part HCl (10 *N*) to three parts water (This reagent is optional for use with this practice). See Section 8.

8. Safety Precautions

8.1 When preparing the dilute HCl solution of one part concentrated hydrochloric acid (10 *N*) to three parts of distilled water, slowly add acid into water following necessary safety precautions. Handle with caution and store safely. If solution comes into contact with the skin, rinse thoroughly with water.

8.2 **Caution**—Do not add water to acid.

9. Sampling

9.1 The sample shall be considered to be representative of the stratum from which it was obtained by an appropriate, accepted, or standard procedure.

NOTE 6—Preferably, the sampling procedure should be identified as having been conducted in accordance with Practices D 1452, D 1587, or D 2113, or Test Method D 1586.

9.2 The sample shall be carefully identified as to origin.

NOTE 7—Remarks as to the origin may take the form of a boring number and sample number in conjunction with a job number, a geologic stratum, a pedologic horizon or a location description with respect to a permanent monument, a grid system or a station number and offset with respect to a stated centerline and a depth or elevation.

9.3 For accurate description and identification, the minimum amount of the specimen to be examined shall be in accordance with the following schedule:

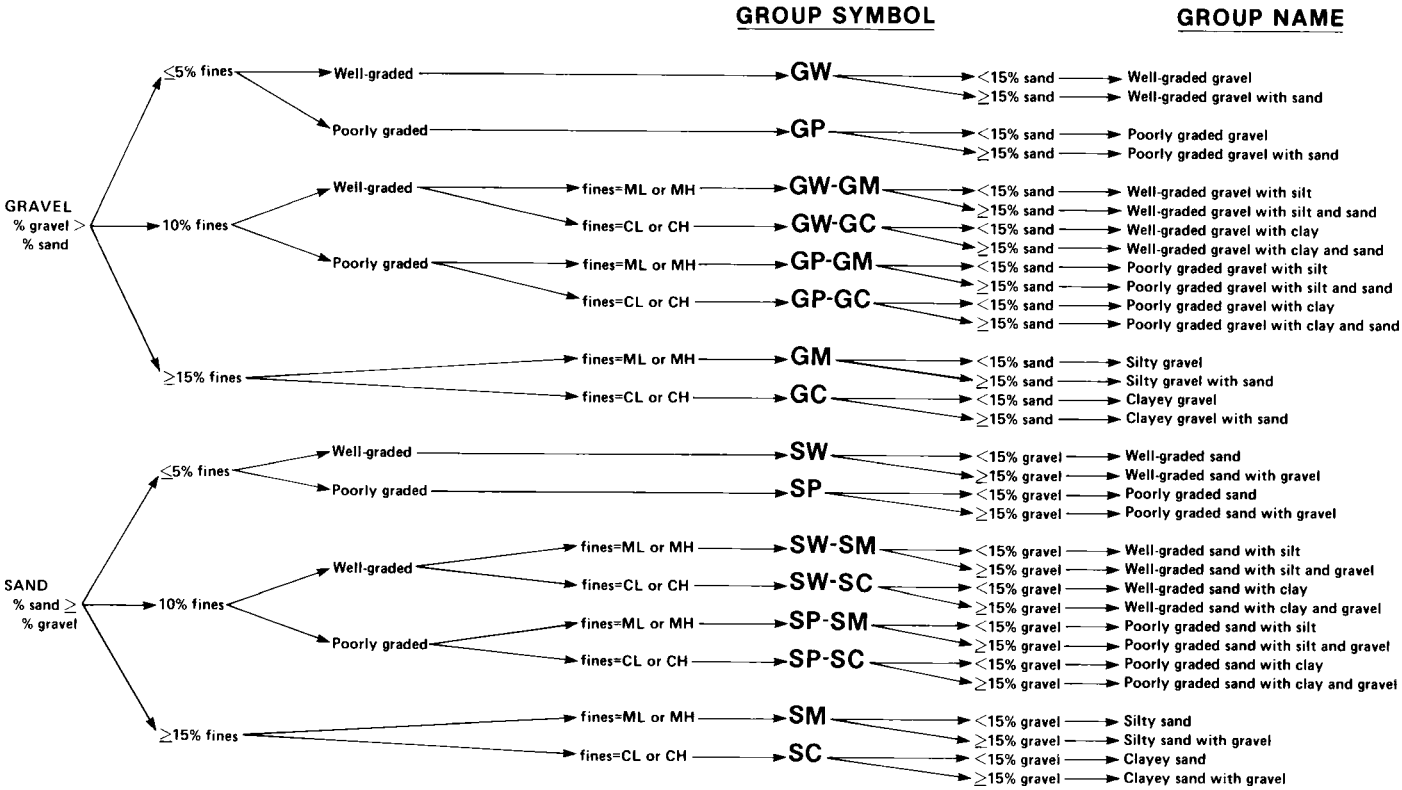

NOTE 1—Percentages are based on estimating amounts of fines, sand, and gravel to the nearest 5 %.

FIG. 2 Flow Chart for Identifying Coarse-Grained Soils (less than 50 % fines)

Maximum Particle Size, Sieve Opening	Minimum Specimen Size, Dry Weight
4.75 mm (No. 4)	100 g (0.25 lb)
9.5 mm (⅜ in.)	200 g (0.5 lb)
19.0 mm (¾ in.)	1.0 kg (2.2 lb)
38.1 mm (1½ in.)	8.0 kg (18 lb)
75.0 mm (3 in.)	60.0 kg (132 lb)

NOTE 8—If random isolated particles are encountered that are significantly larger than the particles in the soil matrix, the soil matrix can be accurately described and identified in accordance with the preceeding schedule.

9.4 If the field sample or specimen being examined is smaller than the minimum recommended amount, the report shall include an appropriate remark.

10. Descriptive Information for Soils

10.1 *Angularity*—Describe the angularity of the sand (coarse sizes only), gravel, cobbles, and boulders, as angular, subangular, subrounded, or rounded in accordance with the criteria in Table 1 and Fig. 3. A range of angularity may be stated, such as: subrounded to rounded.

10.2 *Shape*—Describe the shape of the gravel, cobbles, and boulders as flat, elongated, or flat and elongated if they meet the criteria in Table 2 and Fig. 4. Otherwise, do not mention the shape. Indicate the fraction of the particles that have the shape, such as: one-third of the gravel particles are flat.

10.3 *Color*—Describe the color. Color is an important property in identifying organic soils, and within a given locality it may also be useful in identifying materials of similar geologic origin. If the sample contains layers or patches of varying colors, this shall be noted and all representative colors shall be described. The color shall be described for moist samples. If the color represents a dry condition, this shall be stated in the report.

TABLE 1 Criteria for Describing Angularity of Coarse-Grained Particles (see Fig. 3)

Description	Criteria
Angular	Particles have sharp edges and relatively plane sides with unpolished surfaces
Subangular	Particles are similar to angular description but have rounded edges
Subrounded	Particles have nearly plane sides but have well-rounded corners and edges
Rounded	Particles have smoothly curved sides and no edges

10.4 *Odor*—Describe the odor if organic or unusual. Soils containing a significant amount of organic material usually have a distinctive odor of decaying vegetation. This is especially apparent in fresh samples, but if the samples are dried, the odor may often be revived by heating a moistened sample. If the odor is unusual (petroleum product, chemical, and the like), it shall be described.

10.5 *Moisture Condition*—Describe the moisture condition as dry, moist, or wet, in accordance with the criteria in Table 3.

10.6 *HCl Reaction*—Describe the reaction with HCl as none, weak, or strong, in accordance with the critera in Table 4. Since calcium carbonate is a common cementing agent, a report of its presence on the basis of the reaction with dilute hydrochloric acid is important.

10.7 *Consistency*—For intact fine-grained soil, describe the

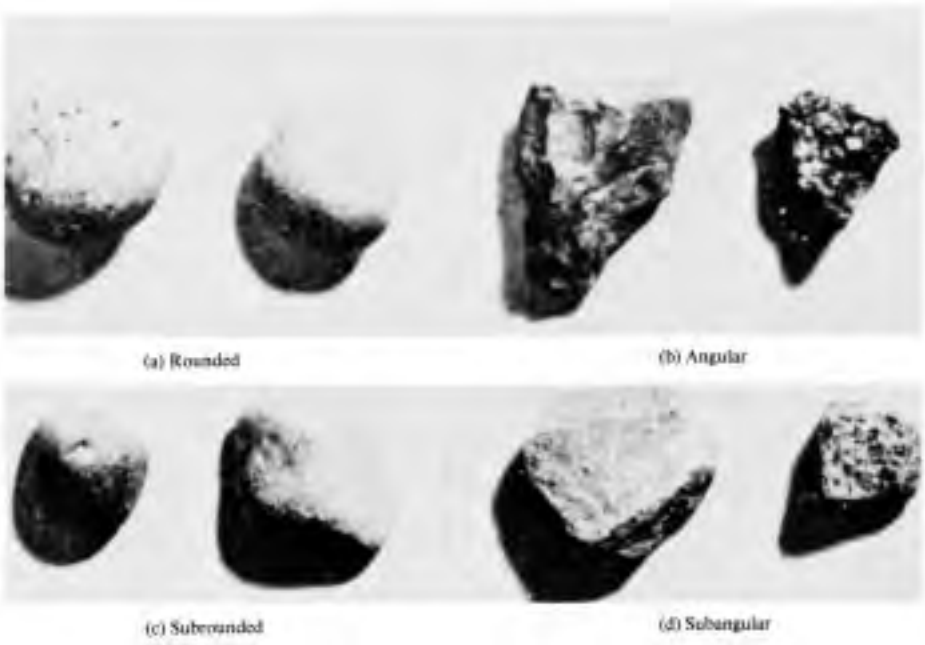

FIG. 3 Typical Angularity of Bulky Grains

TABLE 2 Criteria for Describing Particle Shape (see Fig. 4)

The particle shape shall be described as follows where length, width, and thickness refer to the greatest, intermediate, and least dimensions of a particle, respectively.	
Flat	Particles with width/thickness > 3
Elongated	Particles with length/width > 3
Flat and elongated	Particles meet criteria for both flat and elongated

consistency as very soft, soft, firm, hard, or very hard, in accordance with the criteria in Table 5. This observation is inappropriate for soils with significant amounts of gravel.

10.8 *Cementation*—Describe the cementation of intact coarse-grained soils as weak, moderate, or strong, in accordance with the criteria in Table 6.

10.9 *Structure*—Describe the structure of intact soils in accordance with the criteria in Table 7.

10.10 *Range of Particle Sizes*—For gravel and sand components, describe the range of particle sizes within each component as defined in 3.1.2 and 3.1.6. For example, about 20 % fine to coarse gravel, about 40 % fine to coarse sand.

10.11 *Maximum Particle Size*—Describe the maximum particle size found in the sample in accordance with the following information:

10.11.1 *Sand Size*—If the maximum particle size is a sand size, describe as fine, medium, or coarse as defined in 3.1.6. For example: maximum particle size, medium sand.

10.11.2 *Gravel Size*—If the maximum particle size is a gravel size, describe the maximum particle size as the smallest sieve opening that the particle will pass. For example, maximum particle size, 1½ in. (will pass a 1½-in. square opening but not a ¾-in. square opening).

10.11.3 *Cobble or Boulder Size*—If the maximum particle size is a cobble or boulder size, describe the maximum dimension of the largest particle. For example: maximum dimension, 18 in. (450 mm).

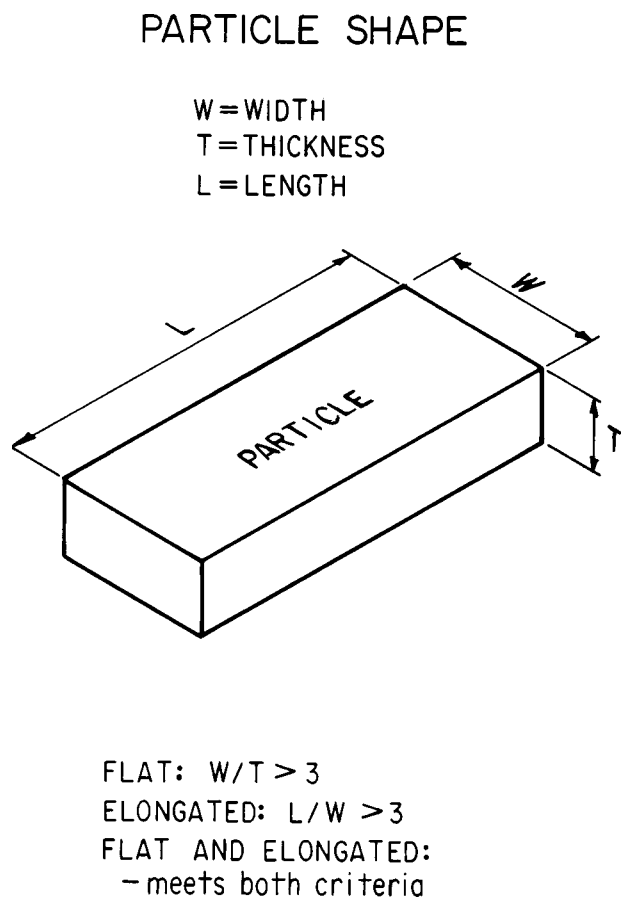

FIG. 4 Criteria for Particle Shape

10.12 *Hardness*—Describe the hardness of coarse sand and larger particles as hard, or state what happens when the

TABLE 3 Criteria for Describing Moisture Condition

Description	Criteria
Dry	Absence of moisture, dusty, dry to the touch
Moist	Damp but no visible water
Wet	Visible free water, usually soil is below water table

TABLE 4 Criteria for Describing the Reaction With HCl

Description	Criteria
None	No visible reaction
Weak	Some reaction, with bubbles forming slowly
Strong	Violent reaction, with bubbles forming immediately

TABLE 5 Criteria for Describing Consistency

Description	Criteria
Very soft	Thumb will penetrate soil more than 1 in. (25 mm)
Soft	Thumb will penetrate soil about 1 in. (25 mm)
Firm	Thumb will indent soil about ¼in. (6 mm)
Hard	Thumb will not indent soil but readily indented with thumbnail
Very hard	Thumbnail will not indent soil

TABLE 6 Criteria for Describing Cementation

Description	Criteria
Weak	Crumbles or breaks with handling or little finger pressure
Moderate	Crumbles or breaks with considerable finger pressure
Strong	Will not crumble or break with finger pressure

TABLE 7 Criteria for Describing Structure

Description	Criteria
Stratified	Alternating layers of varying material or color with layers at least 6 mm thick; note thickness
Laminated	Alternating layers of varying material or color with the layers less than 6 mm thick; note thickness
Fissured	Breaks along definite planes of fracture with little resistance to fracturing
Slickensided	Fracture planes appear polished or glossy, sometimes striated
Blocky	Cohesive soil that can be broken down into small angular lumps which resist further breakdown
Lensed	Inclusion of small pockets of different soils, such as small lenses of sand scattered through a mass of clay; note thickness
Homogeneous	Same color and appearance throughout

particles are hit by a hammer, for example, gravel-size particles fracture with considerable hammer blow, some gravel-size particles crumble with hammer blow. "Hard" means particles do not crack, fracture, or crumble under a hammer blow.

10.13 Additional comments shall be noted, such as the presence of roots or root holes, difficulty in drilling or augering hole, caving of trench or hole, or the presence of mica.

10.14 A local or commercial name or a geologic interpretation of the soil, or both, may be added if identified as such.

10.15 A classification or identification of the soil in accordance with other classification systems may be added if identified as such.

11. Identification of Peat

11.1 A sample composed primarily of vegetable tissue in various stages of decomposition that has a fibrous to amorphous texture, usually a dark brown to black color, and an organic odor, shall be designated as a highly organic soil and shall be identified as peat, PT, and not subjected to the identification procedures described hereafter.

12. Preparation for Identification

12.1 The soil identification portion of this practice is based on the portion of the soil sample that will pass a 3-in. (75-mm) sieve. The larger than 3-in. (75-mm) particles must be removed, manually, for a loose sample, or mentally, for an intact sample before classifying the soil.

12.2 Estimate and note the percentage of cobbles and the percentage of boulders. Performed visually, these estimates will be on the basis of volume percentage.

NOTE 9—Since the percentages of the particle-size distribution in Test Method D 2487 are by dry weight, and the estimates of percentages for gravel, sand, and fines in this practice are by dry weight, it is recommended that the report state that the percentages of cobbles and boulders are by volume.

12.3 Of the fraction of the soil smaller than 3 in. (75 mm), estimate and note the percentage, by dry weight, of the gravel, sand, and fines (see Appendix X4 for suggested procedures).

NOTE 10—Since the particle-size components appear visually on the basis of volume, considerable experience is required to estimate the percentages on the basis of dry weight. Frequent comparisons with laboratory particle-size analyses should be made.

12.3.1 The percentages shall be estimated to the closest 5 %. The percentages of gravel, sand, and fines must add up to 100 %.

12.3.2 If one of the components is present but not in sufficient quantity to be considered 5 % of the smaller than 3-in. (75-mm) portion, indicate its presence by the term *trace*, for example, trace of fines. A trace is not to be considered in the total of 100 % for the components.

13. Preliminary Identification

13.1 The soil is *fine grained* if it contains 50 % or more fines. Follow the procedures for identifying fine-grained soils of Section 14.

13.2 The soil is *coarse grained* if it contains less than 50 % fines. Follow the procedures for identifying coarse-grained soils of Section 15.

14. Procedure for Identifying Fine-Grained Soils

14.1 Select a representative sample of the material for examination. Remove particles larger than the No. 40 sieve (medium sand and larger) until a specimen equivalent to about a handful of material is available. Use this specimen for performing the dry strength, dilatancy, and toughness tests.

14.2 *Dry Strength*:

14.2.1 From the specimen, select enough material to mold into a ball about 1 in. (25 mm) in diameter. Mold the material until it has the consistency of putty, adding water if necessary.

14.2.2 From the molded material, make at least three test specimens. A test specimen shall be a ball of material about ½ in. (12 mm) in diameter. Allow the test specimens to dry in air, or sun, or by artificial means, as long as the temperature does not exceed 60°C.

14.2.3 If the test specimen contains natural dry lumps, those that are about ½ in. (12 mm) in diameter may be used in place of the molded balls.

NOTE 11—The process of molding and drying usually produces higher strengths than are found in natural dry lumps of soil.

14.2.4 Test the strength of the dry balls or lumps by crushing between the fingers. Note the strength as none, low, medium, high, or very high in accorance with the criteria in Table 8. If natural dry lumps are used, do not use the results of any of the lumps that are found to contain particles of coarse sand.

14.2.5 The presence of high-strength water-soluble cementing materials, such as calcium carbonate, may cause exceptionally high dry strengths. The presence of calcium carbonate can usually be detected from the intensity of the reaction with dilute hydrochloric acid (see 10.6).

14.3 *Dilatancy*:

14.3.1 From the specimen, select enough material to mold into a ball about ½ in. (12 mm) in diameter. Mold the material, adding water if necessary, until it has a soft, but not sticky, consistency.

14.3.2 Smooth the soil ball in the palm of one hand with the blade of a knife or small spatula. Shake horizontally, striking the side of the hand vigorously against the other hand several times. Note the reaction of water appearing on the surface of the soil. Squeeze the sample by closing the hand or pinching the soil between the fingers, and note the reaction as none, slow, or rapid in accordance with the criteria in Table 9. The reaction is the speed with which water appears while shaking, and disappears while squeezing.

14.4 *Toughness*:

14.4.1 Following the completion of the dilatancy test, the test specimen is shaped into an elongated pat and rolled by hand on a smooth surface or between the palms into a thread about ⅛ in. (3 mm) in diameter. (If the sample is too wet to roll easily, it should be spread into a thin layer and allowed to lose some water by evaporation.) Fold the sample threads and reroll repeatedly until the thread crumbles at a diameter of about ⅛ in. The thread will crumble at a diameter of ⅛ in. when the soil is near the plastic limit. Note the pressure required to roll the thread near the plastic limit. Also, note the strength of the thread. After the thread crumbles, the pieces should be lumped together and kneaded until the lump crumbles. Note the toughness of the material during kneading.

14.4.2 Describe the toughness of the thread and lump as low, medium, or high in accordance with the criteria in Table 10.

TABLE 8 Criteria for Describing Dry Strength

Description	Criteria
None	The dry specimen crumbles into powder with mere pressure of handling
Low	The dry specimen crumbles into powder with some finger pressure
Medium	The dry specimen breaks into pieces or crumbles with considerable finger pressure
High	The dry specimen cannot be broken with finger pressure. Specimen will break into pieces between thumb and a hard surface
Very high	The dry specimen cannot be broken between the thumb and a hard surface

TABLE 9 Criteria for Describing Dilatancy

Description	Criteria
None	No visible change in the specimen
Slow	Water appears slowly on the surface of the specimen during shaking and does not disappear or disappears slowly upon squeezing
Rapid	Water appears quickly on the surface of the specimen during shaking and disappears quickly upon squeezing

14.5 *Plasticity*—On the basis of observations made during the toughness test, describe the plasticity of the material in accordance with the criteria given in Table 11.

14.6 Decide whether the soil is an *inorganic* or an *organic* fine-grained soil (see 14.8). If inorganic, follow the steps given in 14.7.

14.7 *Identification of Inorganic Fine-Grained Soils*:

14.7.1 Identify the soil as a *lean clay*, CL, if the soil has medium to high dry strength, no or slow dilatancy, and medium toughness and plasticity (see Table 12).

14.7.2 Identify the soil as a *fat clay*, CH, if the soil has high to very high dry strength, no dilatancy, and high toughness and plasticity (see Table 12).

14.7.3 Identify the soil as a *silt*, ML, if the soil has no to low dry strength, slow to rapid dilatancy, and low toughness and plasticity, or is nonplastic (see Table 12).

14.7.4 Identify the soil as an *elastic silt*, MH, if the soil has low to medium dry strength, no to slow dilatancy, and low to medium toughness and plasticity (see Table 12).

NOTE 12—These properties are similar to those for a lean clay. However, the silt will dry quickly on the hand and have a smooth, silky feel when dry. Some soils that would classify as MH in accordance with the criteria in Test Method D 2487 are visually difficult to distinguish from lean clays, CL. It may be necessary to perform laboratory testing for proper identification.

14.8 *Identification of Organic Fine-Grained Soils*:

14.8.1 Identify the soil as an *organic soil*, OL/OH, if the soil contains enough organic particles to influence the soil properties. Organic soils usually have a dark brown to black color and may have an organic odor. Often, organic soils will change color, for example, black to brown, when exposed to the air. Some organic soils will lighten in color significantly when air dried. Organic soils normally will not have a high toughness or plasticity. The thread for the toughness test will be spongy.

NOTE 13—In some cases, through practice and experience, it may be possible to further identify the organic soils as organic silts or organic clays, OL or OH. Correlations between the dilatancy, dry strength, toughness tests, and laboratory tests can be made to identify organic soils in certain deposits of similar materials of known geologic origin.

TABLE 10 Criteria for Describing Toughness

Description	Criteria
Low	Only slight pressure is required to roll the thread near the plastic limit. The thread and the lump are weak and soft
Medium	Medium pressure is required to roll the thread to near the plastic limit. The thread and the lump have medium stiffness
High	Considerable pressure is required to roll the thread to near the plastic limit. The thread and the lump have very high stiffness

TABLE 11 Criteria for Describing Plasticity

Description	Criteria
Nonplastic	A ⅛-in. (3-mm) thread cannot be rolled at any water content
Low	The thread can barely be rolled and the lump cannot be formed when drier than the plastic limit
Medium	The thread is easy to roll and not much time is required to reach the plastic limit. The thread cannot be rerolled after reaching the plastic limit. The lump crumbles when drier than the plastic limit
High	It takes considerable time rolling and kneading to reach the plastic limit. The thread can be rerolled several times after reaching the plastic limit. The lump can be formed without crumbling when drier than the plastic limit

TABLE 12 Identification of Inorganic Fine-Grained Soils from Manual Tests

Soil Symbol	Dry Strength	Dilatancy	Toughness
ML	None to low	Slow to rapid	Low or thread cannot be formed
CL	Medium to high	None to slow	Medium
MH	Low to medium	None to slow	Low to medium
CH	High to very high	None	High

14.9 If the soil is estimated to have 15 to 25 % sand or gravel, or both, the words "with sand" or "with gravel" (whichever is more predominant) shall be added to the group name. For example: "lean clay with sand, CL" or "silt with gravel, ML" (see Fig. 1a and Fig. 1b). If the percentage of sand is equal to the percentage of gravel, use "with sand."

14.10 If the soil is estimated to have 30 % or more sand or gravel, or both, the words "sandy" or "gravelly" shall be added to the group name. Add the word "sandy" if there appears to be more sand than gravel. Add the word "gravelly" if there appears to be more gravel than sand. For example: "sandy lean clay, CL", "gravelly fat clay, CH", or "sandy silt, ML" (see Fig. 1a and Fig. 1b). If the percentage of sand is equal to the percent of gravel, use "sandy."

15. Procedure for Identifying Coarse-Grained Soils

(Contains less than 50 % fines)

15.1 The soil is a *gravel* if the percentage of gravel is estimated to be more than the percentage of sand.

15.2 The soil is a *sand* if the percentage of gravel is estimated to be equal to or less than the percentage of sand.

15.3 The soil is a *clean gravel* or *clean sand* if the percentage of fines is estimated to be 5 % or less.

15.3.1 Identify the soil as a *well-graded gravel*, GW, or as a *well-graded sand*, SW, if it has a wide range of particle sizes and substantial amounts of the intermediate particle sizes.

15.3.2 Identify the soil as a *poorly graded gravel*, GP, or as a *poorly graded sand*, SP, if it consists predominantly of one size (uniformly graded), or it has a wide range of sizes with some intermediate sizes obviously missing (gap or skip graded).

15.4 The soil is either a *gravel with fines* or a *sand with fines* if the percentage of fines is estimated to be 15 % or more.

15.4.1 Identify the soil as a *clayey gravel*, GC, or a *clayey sand*, SC, if the fines are clayey as determined by the procedures in Section 14.

15.4.2 Identify the soil as a *silty gravel*, GM, or a *silty sand*, SM, if the fines are silty as determined by the procedures in Section 14.

15.5 If the soil is estimated to contain 10 % fines, give the soil a dual identification using two group symbols.

15.5.1 The first group symbol shall correspond to a clean gravel or sand (GW, GP, SW, SP) and the second symbol shall correspond to a gravel or sand with fines (GC, GM, SC, SM).

15.5.2 The group name shall correspond to the first group symbol plus the words "with clay" or "with silt" to indicate the plasticity characteristics of the fines. For example: "well-graded gravel with clay, GW-GC" or "poorly graded sand with silt, SP-SM" (see Fig. 2).

15.6 If the specimen is predominantly sand or gravel but contains an estimated 15 % or more of the other coarse-grained constituent, the words "with gravel" or "with sand" shall be added to the group name. For example: "poorly graded gravel with sand, GP" or "clayey sand with gravel, SC" (see Fig. 2).

15.7 If the field sample contains any cobbles or boulders, or both, the words "with cobbles" or "with cobbles and boulders" shall be added to the group name. For example: "silty gravel with cobbles, GM."

16. Report

16.1 The report shall include the information as to origin, and the items indicated in Table 13.

NOTE 14—*Example: Clayey Gravel with Sand and Cobbles, GC*—About 50 % fine to coarse, subrounded to subangular gravel; about 30 % fine to coarse, subrounded sand; about 20 % fines with medium plasticity, high dry strength, no dilatancy, medium toughness; weak reaction with HCl; original field sample had about 5 % (by volume) subrounded cobbles, maximum dimension, 150 mm.

In-Place Conditions—Firm, homogeneous, dry, brown

Geologic Interpretation—Alluvial fan

TABLE 13 Checklist for Description of Soils

1. Group name
2. Group symbol
3. Percent of cobbles or boulders, or both (by volume)
4. Percent of gravel, sand, or fines, or all three (by dry weight)
5. Particle-size range:
   Gravel—fine, coarse
   Sand—fine, medium, coarse
6. Particle angularity: angular, subangular, subrounded, rounded
7. Particle shape: (if appropriate) flat, elongated, flat and elongated
8. Maximum particle size or dimension
9. Hardness of coarse sand and larger particles
10. Plasticity of fines: nonplastic, low, medium, high
11. Dry strength: none, low, medium, high, very high
12. Dilatancy: none, slow, rapid
13. Toughness: low, medium, high
14. Color (in moist condition)
15. Odor (mention only if organic or unusual)
16. Moisture: dry, moist, wet
17. Reaction with HCl: none, weak, strong

For intact samples:

18. Consistency (fine-grained soils only): very soft, soft, firm, hard, very hard
19. Structure: stratified, laminated, fissured, slickensided, lensed, homogeneous
20. Cementation: weak, moderate, strong
21. Local name
22. Geologic interpretation
23. Additional comments: presence of roots or root holes, presence of mica, gypsum, etc., surface coatings on coarse-grained particles, caving or sloughing of auger hole or trench sides, difficulty in augering or excavating, etc.

NOTE 15—Other examples of soil descriptions and identification are given in Appendix X1 and Appendix X2.

NOTE 16—If desired, the percentages of gravel, sand, and fines may be stated in terms indicating a range of percentages, as follows:

Trace—Particles are present but estimated to be less than 5 %
Few—5 to 10 %
Little—15 to 25 %
Some—30 to 45 %
Mostly—50 to 100 %

16.2 If, in the soil description, the soil is identified using a classification group symbol and name as described in Test Method D 2487, it must be distinctly and clearly stated in log forms, summary tables, reports, and the like, that the symbol and name are based on visual-manual procedures.

17. Precision and Bias

17.1 This practice provides qualitative information only, therefore, a precision and bias statement is not applicable.

18. Keywords

18.1 classification; clay; gravel; organic soils; sand; silt; soil classification; soil description; visual classification

APPENDIXES

(Nonmandatory Information)

X1. EXAMPLES OF VISUAL SOIL DESCRIPTIONS

X1.1 The following examples show how the information required in 16.1 can be reported. The information that is included in descriptions should be based on individual circumstances and need.

X1.1.1 *Well-Graded Gravel with Sand (GW)*—About 75 % fine to coarse, hard, subangular gravel; about 25 % fine to coarse, hard, subangular sand; trace of fines; maximum size, 75 mm, brown, dry; no reaction with HCl.

X1.1.2 *Silty Sand with Gravel (SM)*—About 60 % predominantly fine sand; about 25 % silty fines with low plasticity, low dry strength, rapid dilatancy, and low toughness; about 15 % fine, hard, subrounded gravel, a few gravel-size particles fractured with hammer blow; maximum size, 25 mm; no reaction with HCl (Note—Field sample size smaller than recommended).

In-Place Conditions—Firm, stratified and contains lenses of silt 1 to 2 in. (25 to 50 mm) thick, moist, brown to gray; in-place density 106 lb/ft^3; in-place moisture 9 %.

X1.1.3 *Organic Soil (OL/OH)*—About 100 % fines with low plasticity, slow dilatancy, low dry strength, and low toughness; wet, dark brown, organic odor; weak reaction with HCl.

X1.1.4 *Silty Sand with Organic Fines (SM)*—About 75 % fine to coarse, hard, subangular reddish sand; about 25 % organic and silty dark brown nonplastic fines with no dry strength and slow dilatancy; wet; maximum size, coarse sand; weak reaction with HCl.

X1.1.5 *Poorly Graded Gravel with Silt, Sand, Cobbles and Boulders (GP-GM)*—About 75 % fine to coarse, hard, subrounded to subangular gravel; about 15 % fine, hard, subrounded to subangular sand; about 10 % silty nonplastic fines; moist, brown; no reaction with HCl; original field sample had about 5 % (by volume) hard, subrounded cobbles and a trace of hard, subrounded boulders, with a maximum dimension of 18 in. (450 mm).

X2. USING THE IDENTIFICATION PROCEDURE AS A DESCRIPTIVE SYSTEM FOR SHALE, CLAYSTONE, SHELLS, SLAG, CRUSHED ROCK, AND THE LIKE

X2.1 The identification procedure may be used as a descriptive system applied to materials that exist in-situ as shale, claystone, sandstone, siltstone, mudstone, etc., but convert to soils after field or laboratory processing (crushing, slaking, and the like).

X2.2 Materials such as shells, crushed rock, slag, and the like, should be identified as such. However, the procedures used in this practice for describing the particle size and plasticity characteristics may be used in the description of the material. If desired, an identification using a group name and symbol according to this practice may be assigned to aid in describing the material.

X2.3 The group symbol(s) and group names should be placed in quotation marks or noted with some type of distinguishing symbol. See examples.

X2.4 Examples of how group names and symbols can be incororated into a descriptive system for materials that are not naturally occurring soils are as follows:

X2.4.1 *Shale Chunks*—Retrieved as 2 to 4-in. (50 to 100-mm) pieces of shale from power auger hole, dry, brown, no reaction with HCl. After slaking in water for 24 h, material identified as “Sandy Lean Clay (CL)”; about 60 % fines with medium plasticity, high dry strength, no dilatancy, and medium toughness; about 35 % fine to medium, hard sand; about 5 % gravel-size pieces of shale.

X2.4.2 *Crushed Sandstone*—Product of commercial crushing operation; “Poorly Graded Sand with Silt (SP-SM)”; about 90 % fine to medium sand; about 10 % nonplastic fines; dry, reddish-brown, strong reaction with HCl.

X2.4.3 *Broken Shells*—About 60 % gravel-size broken

shells; about 30 % sand and sand-size shell pieces; about 10 % fines; "Poorly Graded Gravel with Sand (GP)."

X2.4.4 *Crushed Rock*—Processed from gravel and cobbles in Pit No. 7; "Poorly Graded Gravel (GP)"; about 90 % fine, hard, angular gravel-size particles; about 10 % coarse, hard, angular sand-size particles; dry, tan; no reaction with HCl.

X3. SUGGESTED PROCEDURE FOR USING A BORDERLINE SYMBOL FOR SOILS WITH TWO POSSIBLE IDENTIFICATIONS.

X3.1 Since this practice is based on estimates of particle size distribution and plasticity characteristics, it may be difficult to clearly identify the soil as belonging to one category. To indicate that the soil may fall into one of two possible basic groups, a borderline symbol may be used with the two symbols separated by a slash. For example: SC/CL or CL/CH.

X3.1.1 A borderline symbol may be used when the percentage of fines is estimated to be between 45 and 55 %. One symbol should be for a coarse-grained soil with fines and the other for a fine-grained soil. For example: GM/ML or CL/SC.

X3.1.2 A borderline symbol may be used when the percentage of sand and the percentage of gravel are estimated to be about the same. For example: GP/SP, SC/GC, GM/SM. It is practically impossible to have a soil that would have a borderline symbol of GW/SW.

X3.1.3 A borderline symbol may be used when the soil could be either well graded or poorly graded. For example: GW/GP, SW/SP.

X3.1.4 A borderline symbol may be used when the soil could either be a silt or a clay. For example: CL/ML, CH/MH, SC/SM.

X3.1.5 A borderline symbol may be used when a fine-grained soil has properties that indicate that it is at the boundary between a soil of low compressibility and a soil of high compressibility. For example: CL/CH, MH/ML.

X3.2 The order of the borderline symbols should reflect similarity to surrounding or adjacent soils. For example: soils in a borrow area have been identified as CH. One sample is considered to have a borderline symbol of CL and CH. To show similarity, the borderline symbol should be CH/CL.

X3.3 The group name for a soil with a borderline symbol should be the group name for the first symbol, except for:

CL/CH lean to fat clay
ML/CL clayey silt
CL/ML silty clay

X3.4 The use of a borderline symbol should not be used indiscriminately. Every effort shall be made to first place the soil into a single group.

X4. SUGGESTED PROCEDURES FOR ESTIMATING THE PERCENTAGES OF GRAVEL, SAND, AND FINES IN A SOIL SAMPLE

X4.1 *Jar Method*—The relative percentage of coarse- and fine-grained material may be estimated by thoroughly shaking a mixture of soil and water in a test tube or jar, and then allowing the mixture to settle. The coarse particles will fall to the bottom and successively finer particles will be deposited with increasing time; the sand sizes will fall out of suspension in 20 to 30 s. The relative proportions can be estimated from the relative volume of each size separate. This method should be correlated to particle-size laboratory determinations.

X4.2 *Visual Method*—Mentally visualize the gravel size particles placed in a sack (or other container) or sacks. Then, do the same with the sand size particles and the fines. Then, mentally compare the number of sacks to estimate the percentage of plus No. 4 sieve size and minus No. 4 sieve size present. The percentages of sand and fines in the minus sieve size No. 4 material can then be estimated from the wash test (X4.3).

X4.3 *Wash Test (for relative percentages of sand and fines)*—Select and moisten enough minus No. 4 sieve size material to form a 1-in (25-mm) cube of soil. Cut the cube in half, set one-half to the side, and place the other half in a small dish. Wash and decant the fines out of the material in the dish until the wash water is clear and then compare the two samples and estimate the percentage of sand and fines. Remember that the percentage is based on weight, not volume. However, the volume comparison will provide a reasonable indication of grain size percentages.

X4.3.1 While washing, it may be necessary to break down lumps of fines with the finger to get the correct percentages.

X5. ABBREVIATED SOIL CLASSIFICATION SYMBOLS

X5.1 In some cases, because of lack of space, an abbreviated system may be useful to indicate the soil classification symbol and name. Examples of such cases would be graphical logs, databases, tables, etc.

X5.2 This abbreviated system is not a substitute for the full name and descriptive information but can be used in supplementary presentations when the complete description is referenced.

X5.3 The abbreviated system should consist of the soil classification symbol based on this standard with appropriate lower case letter prefixes and suffixes as:

Prefix:	Suffix:
s = sandy	s = with sand
g = gravelly	g = with gravel
	c = with cobbles
	b = with boulders

X5.4 The soil classification symbol is to be enclosed in parenthesis. Some examples would be:

Group Symbol and Full Name	Abbreviated
CL, Sandy lean clay	s(CL)
SP-SM, Poorly graded sand with silt and gravel	(SP-SM)g
GP, poorly graded gravel with sand, cobbles, and boulders	(GP)scb
ML, gravelly silt with sand and cobbles	g(ML)sc

SUMMARY OF CHANGES

In accordance with Committee D18 policy, this section identifies the location of changes to this standard since the last edition (1993$^{\epsilon 1}$) that may impact the use of this standard.

(1) Added Practice D 3740 to Section 2.

(2) Added Note 5 under 5.7 and renumbered subsequent notes.

ASTM International takes no position respecting the validity of any patent rights asserted in connection with any item mentioned in this standard. Users of this standard are expressly advised that determination of the validity of any such patent rights, and the risk of infringement of such rights, are entirely their own responsibility.

This standard is subject to revision at any time by the responsible technical committee and must be reviewed every five years and if not revised, either reapproved or withdrawn. Your comments are invited either for revision of this standard or for additional standards and should be addressed to ASTM International Headquarters. Your comments will receive careful consideration at a meeting of the responsible technical committee, which you may attend. If you feel that your comments have not received a fair hearing you should make your views known to the ASTM Committee on Standards, at the address shown below.

This standard is copyrighted by ASTM International, 100 Barr Harbor Drive, PO Box C700, West Conshohocken, PA 19428-2959, United States. Individual reprints (single or multiple copies) of this standard may be obtained by contacting ASTM at the above address or at 610-832-9585 (phone), 610-832-9555 (fax), or service@astm.org (e-mail); or through the ASTM website (www.astm.org).

STANDARD OPERATING PROCEDURE (SOP) SD-01

DECONTAMINATION OF SEDIMENT SAMPLING EQUIPMENT

SCOPE AND APPLICATION

This SOP describes procedures for decontaminating sampling and processing equipment contaminated by either inorganic or organic materials. To prevent potential cross contamination of samples, all reusable sediment sampling and processing equipment is decontaminated before each use. At the sample collection site, a decontamination area is established in a clean location that is upwind of actual sampling locations, if possible. All sediment sampling and processing equipment is cleaned in this location. Decontaminated equipment is stored away from areas that may cause recontamination. When handling decontamination chemicals, field personnel must follow all relevant procedures and wear protective clothing as stipulated in the site-specific health and safety plan (HSP).

Sampling equipment (e.g., van Veen, Ekman, Ponar, core tubes) may be used to collect samples that will 1) undergo a full-suite analysis (organics, metals, and conventional parameters) or 2) be analyzed for metals and conventional parameters only. Decontamination of sampling equipment used for both analyte groups should follow the order of a detergent wash, site water rinse, organic solvent rinses, and final site water rinse. Sample processing equipment (e.g., bowls, spoons) has a final rinse with distilled/deionized water rinse instead of site water. If the surface of stainless steel equipment appears to be rusting (possibly due to prolonged contact with organic-rich sediment), it should undergo an acid rinse and a site-water rinse at the end of each sampling day to minimize corrosion.

EQUIPMENT AND REAGENTS REQUIRED

Equipment required for decontamination includes the following:

- Polyethylene or polypropylene tub (to collect solvent rinsate)
- Plastic bucket(s) (e.g., 5-gal bucket)
- Tap water or site water
- Carboy, distilled/deionized water (analyte-free; received from testing laboratory or other reliable source)
- Properly labeled squirt bottles

- Funnels
- Alconox®, Liquinox®, or equivalent industrial detergent
- Pesticide-grade acetone and hexane (consult the project-specific field sampling plan [FSP], as the solvents may vary by EPA region or state)
- 10 percent (v/v) nitric acid (reagent grade) for inorganic contaminants
- Baking soda
- Long-handled, hard-bristle brushes
- Extension arm for cleaning core liners
- Plastic sheeting, garbage bags, and aluminum foil
- Core liner caps or plastic wrap and rubber bands
- Personal protective equipment as specified in the health and safety plan.

PROCEDURES

Decontamination Procedures for Full Suite Analysis (Organic, Metal, or Conventional Parameters)

Two organic solvents are used in this procedure. The first is miscible with water (e.g., ethanol) and is intended to scavenge water from the surface of the sampling equipment and allow the equipment to dry quickly. This allows the second solvent to fully contact the surface of the sampler. Make sure that the solvent ordered is anhydrous or has a very low water content (i.e., < 1 percent). If ethanol is used, make sure that the denaturing agent in the alcohol is not an analyte in the samples. The second organic solvent is hydrophobic (e.g., hexane) and is intended to dissolve any organic chemicals that are on the surface of the equipment.

The exact solvents used for a given project may vary by EPA region or state (see project-specific FSP). Integral uses ethanol and hexane as preferred solvents for equipment decontamination. If specified in the project-specific FSP, isopropanol or acetone can be substituted for ethanol, and methanol can be substituted for hexane in the decontamination sequence. The choice of solvents is also dependent on the kind of material from which the equipment is made (e.g., acetone cannot be used on polycarbonate), and the ambient temperature (e.g., hexane is too volatile in hot climates). In addition, although methanol is sometimes slightly more effective than other solvents, its use is discouraged due to potential toxicity to sampling personnel.

The specific procedures for decontaminating sediment sampling equipment and sediment compositing equipment are as follows:

1. Rinse the equipment thoroughly with tap or site water to remove visible sediment. Perform this step onsite for all equipment, including core liners that will not be used again until the next day of sampling. After removing visible solids, set aside sampling equipment that does not need to be used again that day; this equipment should be thoroughly cleaned in the field laboratory at the end of the day.
2. Pour a small amount of concentrated laboratory detergent into a bucket (i.e., about 1–2 tablespoons per 5-gal bucket) and fill it halfway with tap or site water. If the detergent is in crystal form, make sure all crystals are completely dissolved prior to use.
3. Scrub the equipment in the detergent solution using a long-handled brush with rigid bristles. For the polycarbonate core liners, use a round brush attached to an extension arm to reach the entire inside of the liners, scrubbing with a back-and-forth motion. Be sure to clean the outside of core liners, bowls, and other pieces that may be covered with sediment.
4. Double rinse the equipment with tap or site water and set right-side-up on a stable surface to drain. The more completely the equipment drains, the less solvent will be needed in the next step. Do not allow any surface that will come in contact with the sample to touch any contaminated surface.
5. If the surface of stainless steel equipment appears to be rusting (this will occur during prolonged use in anoxic marine sediments), passivate[1] the surface as follows (if no rust is present, skip to next step). Rinse with a 10 percent (v/v) nitric acid solution using a squirt bottle, or wipe all surfaces using a saturated paper towel. Areas showing rust may require some rubbing with the paper towel. If using a squirt bottle, let the excess acid drain into the waste container (which may need to be equipped with a funnel). Double-rinse equipment with tap or site water and set right-side-up on a stable surface to drain thoroughly.
6. Carefully rinse the equipment with ethanol from a squirt bottle, and let the excess solvent drain into a waste container (which may need to be equipped with a funnel). Hold core liners over the waste container and turn them slowly so the stream of solvent contacts the entire surface. Turn the sample apparatus (e.g., grab sampler) on its side and open it to wash it most effectively. Set the equipment in a clean location and allow it to air dry. Use only enough solvent to scavenge all of the water and flow off the surface of the equipment (i.e., establish sheet flow) into the waste container. Allow equipment to drain as much as possible. Ideally, the equipment will be dry. The more thoroughly it drains, the less solvent will be needed in the next step.

[1] Passivation is the process of making a material less reactive relative to another material. For example, before sediment is placed in a stainless-steel container, the container can be passivated by rinsing it with a dilute solution of nitric acid and deionized water.

7. Carefully rinse the drained or air-dried equipment with hexane from a squirt bottle, and let the excess solvent drain into the waste container (which may need to be equipped with a funnel). If necessary, widen the opening of the squirt bottle to allow enough solvent to run through the core liners without evaporating. (Hexane acts as the primary solvent of organic chemicals. Ethanol is soluble in hexane but water is not. If water beading occurs, it means that the equipment was not thoroughly rinsed with acetone or that the acetone that was purchased was not free of water.) When the equipment has been rinsed with hexane, set it in a clean location and allow the hexane to evaporate before using the equipment for sampling. Use only enough solvent to scavenge all of the acetone and flow off the surface of the equipment (i.e., establish sheet flow) into the waste container.
8. Do a final rinse with site water for the sampling equipment (i.e., van Veen, Ekman, Ponar, core tubes) and with distilled/deionized water for processing equipment (i.e., stainless-steel bowls and spoons). Equipment does not need to be dried before use.
9. If the decontaminated sampling equipment is not to be used immediately, wrap small stainless-steel items in aluminum foil (dull side facing the cleaned area). Seal the polycarbonate core liners at both ends with either core caps or cellophane plastic and rubber bands. Close the jaws of the Ekman and Ponar grab samplers and wrap in aluminum foil.

   If the sample collection or processing equipment is cleaned at the field laboratory and transported to the site, then the decontaminated equipment will be wrapped in aluminum foil (dull side facing the cleaned area) and stored and transported in a clean plastic bag (e.g., a trash bag) until ready for use, unless the project-specific FSP lists special handling procedures.
10. Rinse or wipe with a wetted paper towel all stainless-steel equipment at the end of each sampling day with 10 percent (v/v) normal nitric acid solution. Follow with a freshwater rinse (site water is okay as long as it is not brackish or salt water).
11. After decontaminating all of the sampling equipment, place the disposable gloves and used foil in garbage bags for disposal in a solid waste landfill. When not in use, keep the waste solvent container closed and store in a secure area. The waste should be transferred to empty solvent bottles and disposed of at a licensed facility per the procedures listed in the project-specific FSP. When not in use, keep the waste acid container closed and store in a secure area. The acid waste should be neutralized with baking soda and disposed of per the procedures listed in the project-specific FSP.

Decontamination Procedures for Metals and Conventional Parameters Only

The specific procedures for decontaminating sediment sampling equipment and sediment processing equipment are as follows:

1. Rinse the equipment thoroughly with tap or site water to remove the visible sediment. Perform this step onsite for all equipment, including core liners that will not be used again until the next day of sampling. Set aside pieces that do not need to be used again that day; these pieces should be and thoroughly cleaned in the field laboratory at the end of the day.
2. Pour a small amount of concentrated laboratory detergent into a bucket (i.e., about 1–2 tablespoons per 5-gal bucket) and fill it halfway with tap or site water. If the detergent is in crystal form, make sure all crystals are completely dissolved prior to use.
3. Scrub the equipment in the detergent solution using a long-handled brush with rigid bristles. For the polycarbonate core liners, use a round brush attached to an extension arm to reach the entire inside of the liners, scrubbing with a back-and-forth motion. Be sure to clean the outside of core liners, bowls, and other pieces that may be covered with sediment.
4. Double-rinse the equipment with tap or site water and set right-side-up on a stable surface to drain. Do not allow any surface that will come in contact with the sample to touch any contaminated surface.
5. If the surface of stainless steel equipment appears to be rusting (this will occur during prolonged use in anoxic marine sediments), passivate[2] the surface as follows (if no rust is present, skip to next step). Rinse with a 10 percent (v/v) nitric acid solution using a squirt bottle, or wipe all surfaces using a saturated paper towel. Areas showing rust may require some rubbing with the paper towel. If using a squirt bottle, let the excess acid drain into the waste container (which may need to be equipped with a funnel). Double-rinse sampling equipment with tap or site water and set right-side-up on a stable surface to drain. Double-rinse processing equipment with distilled/deionized water and allow to drain.
6. If the decontaminated sampling equipment is not to be used immediately, wrap small stainless-steel items in aluminum foil (dull side facing the cleaned area). Seal the polycarbonate core liners at both ends with either core caps or cellophane plastic and rubber bands. Close the jaws of the Ekman and Ponar grab samplers and wrap in aluminum foil.

   If the sample collecting or processing equipment is cleaned at the field laboratory and transported to the site, then the decontaminated equipment will be wrapped in aluminum foil (dull side facing the cleaned area) and stored and transported in a clean plastic bag until ready for use, unless the project-specific FSP lists special handling procedures.

[2] Passivation is the process of making a material less reactive relative to another material. For example, before sediment is placed in a stainless-steel container, the container can be passivated by rinsing it with a dilute solution of nitric acid and deionized water.

7. After decontaminating all of the sampling equipment, place the disposable gloves and used foil in garbage bags for disposal in a solid waste landfill. When not in use, keep the waste acid container closed and store in a secure area. The acid waste should be neutralized with baking soda and disposed of per the procedures listed in the project-specific FSP.

STANDARD OPERATING PROCEDURE (SOP) AP-03

SAMPLE CUSTODY

SCOPE AND APPLICATION

This SOP describes Integral procedures for custody management of environmental samples.

A stringent, established program of sample chain-of-custody will be followed during sample storage and shipping activities to account for each sample. The procedure outlined herein will be used with SOP AP-01, which covers sample packaging and shipping; SOP AP-02, which covers the use of field logbooks and other types of field documentation; and SOP AP-04, which covers sample labeling. Chain-of-custody (COC) forms ensure that samples are traceable from the time of collection through processing and analysis until final disposition. A sample is considered to be in a person's custody if any of the following criteria are met:

1. The sample is in the person's possession
2. The sample is in the person's view after being in his or her possession
3. The sample is in the person's possession and is being transferred to a designated secure area
4. The sample has been locked up to prevent tampering after it was in the person's possession.

At no time is it acceptable for samples to be outside of Integral personnel's custody unless the samples have been transferred to a secure area (i.e., locked up). If the samples cannot be placed in a secure area, then an Integral field team member must physically remain with the samples (e.g., at lunch time one team member must remain with the samples).

CHAIN-OF-CUSTODY FORMS

The COC form is critical because it documents sample possession from the time of collection through final disposition. The form also provides information to the laboratory regarding what analyses are to be performed on the samples that are shipped.

Complete the COC form after each field collection activity and before shipping the samples to the laboratory. Sampling personnel are responsible for the care and custody of the samples until they are shipped. The individuals relinquishing and receiving the samples must sign the

COC form(s), indicating the time and date of the transfer, when transferring possession of the samples.

A COC form consists of three-part carbonless paper with white, yellow, and pink copies. The sampling team leader keeps the pink copy. The white and yellow sheets are placed in a sealed plastic bag and secured inside the top of each transfer container (e.g., cooler). Field staff retain the pink sheet for filing at the Integral project manager's location. Each COC form has a unique four-digit number. This number and the samples on the form must be recorded in the field logbook. Integral also uses computer-generated COC forms. If computer-generated forms are used, then the forms must be printed in triplicate and all three sheets signed so that two sheets can accompany the shipment to the laboratory and one sheet can be retained on file. Alternatively, if sufficient time is available, the computer-generated forms will be printed on three-part carbonless paper.

Record on the COC form the project-assigned sample number and the unique tag number at the bottom of each sample label. The COC form also identifies the sample collection date and time, type of sample, project name, and sampling personnel. In addition, the COC form provides information on the preservative or other sample pretreatment applied in the field and the analyses to be conducted by referencing a list of specific analyses or the statement of work for the laboratory. The COC form is sent to the laboratory along with the sample(s).

PROCEDURES

Use the following guidelines to ensure the integrity of the samples:

1. Sign and date each COC form. Have the person who relinquishes custody of the samples also sign this form.
2. At the end of each sampling day and prior to shipping or storage, make COC entries for all samples. Check the information on the labels and tags against field logbook entries.
3. Do not sign the COC form until the team leader has checked the information for inaccuracies. Make corrections by drawing a single line through any incorrect entry, and then initial and date it. Make revised entries in the space below the entries. After making corrections, mark out any blank lines remaining on the COC form, using single lines that are initialed and dated. This procedure will prevent any unauthorized additions.

   At the bottom of each COC form is a space for the signatures of the persons relinquishing and receiving the samples and the time and date of the transfer. The time the samples were relinquished should match exactly the time they were received by another party. Under no circumstances should there be any time when custody of the samples is undocumented.

4. If samples are sent by a commercial carrier not affiliated with the laboratory, such as FedEx or United Parcel Service (UPS), record the name of the carrier on the COC form. Also enter on the COC form any tracking numbers supplied by the carrier. The time of transfer should be as close to the actual drop-off time as possible. After signing the COC forms and removing the pink copy, seal them inside the transfer container.
5. If errors are found after the shipment has left the custody of sampling personnel, make a corrected version of the forms and send it to all relevant parties. Fix minor errors by making the change on a copy of the original with a brief explanation and signature. Errors in the signature block may require a letter of explanation.
6. Provide a COC form and an Archive Record form for any samples that are archived internally at Integral.

Upon completion of the field sampling event, the sampling team leader is responsible for submitting all COC forms to be copied. A discussion of copy distribution is provided in SOP AP-02.

CUSTODY SEAL

As security against unauthorized handling of the samples during shipping, affix two custody seals to each sample cooler. Place the custody seals across the opening of the cooler (front right and back left) prior to shipping. Be sure the seals are properly affixed to the cooler so they cannot be removed during shipping. Additional tape across the seal may be prudent.

SHIPPING AIR BILLS

When samples are shipped from the field to the testing laboratory via a commercial carrier (e.g., FedEx, UPS), the shipper provides an air bill or receipt. Upon completion of the field sampling event, the sampling team leader will be responsible for submitting the sender's copy of all shipping air bills to be copied at an Integral office. A discussion of copy distribution is provided in SOP AP-02. Note the air bill number (or tracking number) on the applicable COC forms or, alternatively, note the applicable COC form number on the air bill to enable the tracking of samples if a cooler becomes lost.

ACKNOWLEDGMENT OF SAMPLE RECEIPT FORMS

In most cases, when samples are sent to a testing laboratory, an Acknowledgment of Sample Receipt form is faxed to the project QA/QC coordinator the day the samples are received by the laboratory. The person receiving this form is responsible for reviewing it, making sure that the laboratory has received all the samples that were sent, and verifying that the correct analyses were requested. If an error is found, call the laboratory immediately, and document

any decisions made during the telephone conversation, in writing, on the Acknowledgment of Sample Receipt form. In addition, correct the COC form and fax the corrected version to the laboratory.

Submit the Acknowledgment of Sample Receipt form (and any modified COC forms) to be copied. A discussion of copy distribution is provided in SOP AP-02.

ARCHIVE RECORD FORMS

On the rare occasion that samples are archived at an Integral office, it is the responsibility of the project manager to complete an Archive Record form. This form is to be accompanied by a copy of the COC form for the samples, and will be placed in a locked file cabinet. The original COC form remains with the samples in a sealed Ziploc® bag.

U.S. ENVIRONMENTAL PROTECTION AGENCY
REGION I

LOW STRESS (low flow) PURGING AND SAMPLING PROCEDURE FOR THE COLLECTION OF GROUND WATER SAMPLES FROM MONITORING WELLS

July 30, 1996
Revision 2

U.S. ENVIRONMENTAL PROTECTION AGENCY
REGION I

LOW STRESS (low flow) PURGING AND SAMPLING PROCEDURE FOR THE COLLECTION OF GROUND WATER SAMPLES FROM MONITORING WELLS

I. SCOPE & APPLICATION

This standard operating procedure (SOP) provides a general framework for collecting ground water samples that are indicative of mobile organic and inorganic loads at ambient flow conditions (both the dissolved fraction and the fraction associated with mobile particulates). The SOP emphasizes the need to minimize stress by low water-level drawdowns, and low pumping rates (usually less than 1 liter/min) in order to collect samples with minimal alterations to water chemistry. This SOP is aimed primarily at sampling monitoring wells that can accept a submersible pump and have a screen, or open interval length of 10 feet or less (this is the most common situation). However, this procedure is flexible and can be used in a variety of well construction and ground-water yield situations. Samples thus obtained are suitable for analyses of ground water contaminants (volatile and semi-volatile organic analytes, pesticides, PCBs, metals and other inorganics), or other naturally occurring analytes.

This procedure does not address the collection of samples from wells containing light or dense non-aqueous phase liquids (LNAPLs and DNAPLs). For this the reader may wish to check: Cohen, R.M. and J.W. Mercer, 1993, DNAPL Site Evaluation; C.K. Smoley (CRC Press), Boca Raton, Florida and U.S. Environmental Protection Agency, 1992, RCRA Ground-Water Monitoring: Draft Technical Guidance; Washington, DC (EPA/530-R-93-001).

The screen, or open interval of the monitoring well should be optimally located (both laterally and vertically) to intercept existing contaminant plume(s) or along flowpaths of potential contaminant releases. It is presumed that the analytes of interest move (or potentially move) primarily through the more permeable zones within the screen, or open interval.

Use of trademark names does not imply endorsement by U.S.EPA but is intended only to assist in identification of a specific type of device.

Proper well construction and development cannot be overemphasized, since the use of installation techniques that are appropriate to the hydrogeologic setting often prevents "problem well" situations from occurring. It is also recommended that as part of development or redevelopment the well should be tested to determine the appropriate pumping rate to obtain stabilization of field indicator parameters with minimal drawdown in shortest amount of time. With this information field crews can then conduct purging and sampling in a more expeditious manner.

The mid-point of the saturated screen length (which should not exceed 10 feet) is used by convention as the location of the pump intake. However, significant chemical or permeability contrast(s) within the screen may require additional field work to determine the optimum vertical location(s) for the intake, and appropriate pumping rate(s) for purging and sampling more localized target zone(s). Primary flow zones (high(er) permealability and/or high(er) chemical concentrations) should be identified in wells with screen lengths longer than 10 feet, or in wells with open boreholes in bedrock. Targeting these zones for water sampling will help insure that the low stress procedure will not underestimate contaminant concentrations. The Sampling and Analysis Plan must provide clear instructions on how the pump intake depth(s) will be selected, and reason(s) for the depth(s) selected.

Stabilization of indicator field parameters is used to indicate that conditions are suitable for sampling to begin. Achievement of turbidity levels of less than 5 NTU and stable drawdowns of less than 0.3 feet, while desirable, are not mandatory. Sample collection may still take place provided the remaining criteria in this procedure are met. If after 4 hours of purging indicator field parameters have not stabilized, one of 3 optional courses of action may be taken: a) continue purging until stabilization is achieved, b) discontinue purging, do not collect any samples, and record in log book that stabilization could not be achieved (documentation must describe attempts to achieve stabilization) c) discontinue purging, collect samples and provide full explanation of attempts to achieve stabilization (note: there is a risk that the analytical data obtained, especially metals and strongly hydrophobic organic analytes, may not meet the sampling objectives).

Changes to this SOP should be proposed and discussed when the site Sampling and Analysis Plan is submitted for approval. Subsequent requests for modifications of an approved plan must include adequate technical justification for proposed changes. All changes and modifications must be approved before implementation in field.

II.EQUIPMENT

A. Extraction device

Adjustable rate, submersible pumps are preferred (for example, centrifugal or bladder pump constructed of stainless steel or

Teflon).

Adjustable rate, peristaltic pumps (suction) may be used with caution. Note that EPA guidance states: "Suction pumps are not recommended because they may cause degassing, pH modification, and loss of volatile compounds" (EPA/540/P-87/001, 1987, page 8.5-11).

The use of inertial pumps is discouraged. These devices frequently cause greater disturbance during purging and sampling and are less easily controlled than the pumps listed above. This can lead to sampling results that are adversely affected by purging and sampling operations, and a higher degree of data variability.

B. Tubing

Teflon or Teflon lined polyethylene tubing are preferred when sampling is to include VOCs, SVOCs, pesticides, PCBs and inorganics.

PVC, polypropylene or polyethylene tubing may be used when collecting samples for inorganics analyses. However, these materials should be used with caution when sampling for organics. If these materials are used, the equipment blank (which includes the tubing) data must show that these materials do not add contaminants to the sample.

Stainless steel tubing may be used when sampling for VOCs, SVOCs, pesticides, and PCBs. However, it should be used with caution when sampling for metals.

The use of 1/4 inch or 3/8 inch (inner diameter) tubing is preferred. This will help ensure the tubing remains liquid filled when operating at very low pumping rates.

Pharmaceutical grade (Pharmed) tubing should be used for the section around the rotor head of a peristaltic pump, to minimize gaseous diffusion.

C. Water level measuring device(s), capable of measuring to 0.01 foot accuracy (electronic “tape”, pressure transducer). Recording pressure transducers, mounted above the pump, are especially helpful in tracking water levels during pumping operations, but their use must include check measurements with a water level “tape” at the start and end of each record.

D. Flow measurement supplies (e.g., graduated cylinder and stop watch).

E. Interface probe, if needed.

F. Power source (generator, nitrogen tank, etc.). If a gasoline generator is used, it must be located downwind and at least 30 feet from the well so that the exhaust fumes do not contaminate the samples.

G. Indicator field parameter monitoring instruments - pH, Eh, dissolved oxygen (DO), turbidity, specific conductance, and temperature. Use of a flow-through-cell is required when measuring all listed parameters, except turbidity. Standards to perform field calibration of instruments. Analytical methods are listed in 40 CFR 136, 40 CFR 141, and SW-846. For Eh measurements, follow manufacturer's instructions.

H. Decontamination supplies (for example, non-phosphate detergent, distilled/deionized water, isopropyl alcohol, etc.).

I. Logbook(s), and other forms (for example, well purging forms).

J. Sample Bottles.

K. Sample preservation supplies (as required by the analytical methods).

L. Sample tags or labels.

M. Well construction data, location map, field data from last sampling event.

N. Well keys.

O. Site specific Sample and Analysis Plan/Quality Assurance Project Plan.

P. PID or FID instrument (if appropriate) to detect VOCs for health and safety purposes, and provide qualitative field evaluations.

III.PRELIMINARY SITE ACTIVITIES

Check well for security damage or evidence of tampering, record pertinent observations.

Lay out sheet of clean polyethylene for monitoring and sampling equipment.

Remove well cap and immediately measure VOCs at the rim of the well with a PID or FID instrument and record the reading in the field logbook.

If the well casing does not have a reference point (usually a V-cut or indelible mark in the well casing), make one. Describe its location and record the date of the mark in the logbook.

A synoptic water level measurement round should be performed (in the shortest possible time) before any purging and sampling activities begin. It is recommended that water level depth (to 0.01 ft.) and

total well depth (to 0.1 ft.) be measured the day before, in order to allow for re-settlement of any particulates in the water column. If measurement of total well depth is not made the day before, it should not be measured until after sampling of the well is complete. All measurements must be taken from the established referenced point. Care should be taken to minimize water column disturbance.

Check newly constructed wells for the presence of LNAPLs or DNAPLs before the initial sampling round. If none are encountered, subsequent check measurements with an interface probe are usually not needed unless analytical data or field head space information signal a worsening situation. Note: procedures for collection of LNAPL and DNAPL samples are not addressed in this SOP.

IV.PURGING AND SAMPLING PROCEDURE

Sampling wells in order of increasing chemical concentrations (known or anticipated) is preferred.

1. Install Pump

Lower pump, safety cable, tubing and electrical lines slowly (to minimize disturbance) into the well to the midpoint of the zone to be sampled. The Sampling and Analysis Plan should specify the sampling depth, or provide criteria for selection of intake depth for each well (see Section I). If possible keep the pump intake at least two feet above the bottom of the well, to minimize mobilization of particulates present in the bottom of the well. Collection of turbid free water samples may be especially difficult if there is two feet or less of standing water in the well.

2. Measure Water Level

Before starting pump, measure water level. If recording pressure transducer is used-initialize starting condition.

3. Purge Well

3a. Initial Low Stress Sampling Event

Start the pump at its lowest speed setting and slowly increase the speed until discharge occurs. Check water level. Adjust pump speed until there is little or no water level drawdown (less than 0.3 feet). If the minimal drawdown that can be achieved exceeds 0.3 feet but remains stable, continue purging until indicator field parameters stabilize.

Monitor and record water level and pumping rate every three to five minutes (or as appropriate) during purging. Record any pumping rate adjustments (both time and flow rate). Pumping rates should, as needed, be reduced to the minimum capabilities of the pump (for example, 0.1 - 0.4 l/min) to ensure stabilization of indicator

parameters. Adjustments are best made in the first fifteen minutes of pumping in order to help minimize purging time. During pump start-up, drawdown may exceed the 0.3 feet target and then "recover" as pump flow adjustments are made. Purge volume calculations should utilize stabilized drawdown value, not the initial drawdown. Do not allow the water level to fall to the intake level (if the static water level is above the well screen, avoid lowering the water level into the screen). The final purge volume must be greater than the stabilized drawdown volume plus the extraction tubing volume.

Wells with low recharge rates may require the use of special pumps capable of attaining very low pumping rates (bladder, peristaltic), and/or the use of dedicated equipment. If the recharge rate of the well is lower than extraction rate capabilities of currently manufactured pumps and the well is essentially dewatered during purging, then the well should be sampled as soon as the water level has recovered sufficiently to collect the appropriate volume needed for all anticipated samples (ideally the intake should not be moved during this recovery period). Samples may then be collected even though the indicator field parameters have not stabilized.

3b. Subsequent Low Stress Sampling Events

After synoptic water level measurement round, check intake depth and drawdown information from previous sampling event(s) for each well. Duplicate, to the extent practicable, the intake depth and extraction rate (use final pump dial setting information) from previous event(s). Perform purging operations as above.

4. Monitor Indicator Field Parameters

During well purging, monitor indicator field parameters (turbidity, temperature, specific conductance, pH, Eh, DO) every three to five minutes (or less frequently, if appropriate). Note: during the early phase of purging emphasis should be put on minimizing and stabilizing pumping stress, and recording those adjustments. Purging is considered complete and sampling may begin when all the above indicator field parameters have stabilized. Stabilization is considered to be achieved when three consecutive readings, taken at three (3) to five (5) minute intervals, are within the following limits:

turbidity (10% for values greater than 1 NTU),
DO (10%),
specific conductance (3%),
temperature (3%),
pH (± 0.1 unit),
ORP/Eh (± 10 millivolts).

All measurements, except turbidity, must be obtained using a flow-through-cell. Transparent flow-through-cells are preferred, because they allow field personnel to watch for particulate build-up within the cell. This build-up may affect indicator field parameter values

measured within the cell and may also cause an underestimation of turbidity values measured after the cell. If the cell needs to be cleaned during purging operations, continue pumping and disconnect cell for cleaning, then reconnect after cleaning and continue monitoring activities.

The flow-through-cell must be designed in a way that prevents air bubble entrapment in the cell. When the pump is turned off or cycling on/off (when using a bladder pump), water in the cell must not drain out. Monitoring probes must be submerged in water at all times. If two flow-through-cells are used in series, the one containing the dissolved oxygen probe should come first (this parameter is most susceptible to error if air leaks into the system).

5. Collect Water Samples

Water samples for laboratory analyses must be collected before water has passed through the flow-through-cell (use a by-pass assembly or disconnect cell to obtain sample).

VOC samples should be collected first and directly into pre-preserved sample containers. Fill all sample containers by allowing the pump discharge to flow gently down the inside of the container with minimal turbulence.

During purging and sampling, the tubing should remain filled with water so as to minimize possible changes in water chemistry upon contact with the atmosphere. It is recommended that 1/4 inch or 3/8 inch (inside diameter) tubing be used to help insure that the sample tubing remains water filled. If the pump tubing is not completely filled to the sampling point, use one of the following procedures to collect samples: (1) add clamp, connector (Teflon or stainless steel) or valve to constrict sampling end of tubing; (2) insert small diameter Teflon tubing into water filled portion of pump tubing allowing the end to protrude beyond the end of the pump tubing, collect sample from small diameter tubing; (3) collect non-VOC samples first, then increase flow rate slightly until the water completely fills the tubing, collect sample and record new drawdown, flow rate and new indicator field parameter values.

Add preservative, as required by analytical methods, to samples immediately after they are collected if the sample containers are not pre-preserved. Check analytical methods (e.g. EPA SW-846, water supply, etc.) for additional information on preservation. Check pH for all samples requiring pH adjustment to assure proper pH value. For VOC samples, this will require that a test sample be collected during purging to determine the amount of preservative that needs to be added to the sample containers prior to sampling.

If determination of filtered metal concentrations is a sampling objective, collect filtered water samples using the same low flow procedures. The use of an in-line filter is required, and the filter

size (0.45 um is commonly used) should be based on the sampling objective. Pre-rinse the filter with approximately 25 - 50 ml of ground water prior to sample collection. Preserve filtered water sample immediately. Note: filtered water samples are not an acceptable substitute for unfiltered samples when the monitoring objective is to obtain chemical concentrations of total mobile contaminants in ground water for human health risk calculations.

Label each sample as collected. Samples requiring cooling (volatile organics, cyanide, etc.) will be placed into a cooler with ice or refrigerant for delivery to the laboratory. Metal samples after acidification to a pH less than 2 do not need to be cooled.

6. Post Sampling Activities

If recording pressure transducer is used, remeasure water level with tape.

After collection of the samples, the pump tubing may either be dedicated to the well for resampling (by hanging the tubing inside the well), decontaminated, or properly discarded.

Before securing the well, measure and record the well depth (to 0.1 ft.), if not measured the day before purging began. Note: measurement of total well depth is optional after the initial low stress sampling event. However, it is recommended if the well has a “silting” problem or if confirmation of well identity is needed.

Secure the well.

V. DECONTAMINATION

Decontaminate sampling equipment prior to use in the first well and following sampling of each subsequent well. Pumps will not be removed between purging and sampling operations. The pump and tubing (including support cable and electrical wires which are in contact with the well) will be decontaminated by one of the procedures listed below.

Procedure 1

The decontaminating solutions can be pumped from either buckets or short PVC casing sections through the pump or the pump can be disassembled and flushed with the decontaminating solutions. It is recommended that detergent and isopropyl alcohol be used sparingly in the decontamination process and water flushing steps be extended to ensure that any sediment trapped in the pump is removed. The pump exterior and electrical wires must be rinsed with the decontaminating solutions, as well. The procedure is as follows:

Flush the equipment/pump with potable water.

Flush with non-phosphate detergent solution. If the solution is recycled, the solution must be changed periodically.

Flush with potable or distilled/deionized water to remove all of the detergent solution. If the water is recycled, the water must be changed periodically.

Flush with isopropyl alcohol (pesticide grade). If equipment blank data from the previous sampling event show that the level of contaminants is insignificant, then this step may be skipped.

Flush with distilled/deionized water. The final water rinse must not be recycled.

Procedure 2

Steam clean the outside of the submersible pump.

Pump hot potable water from the steam cleaner through the inside of the pump. This can be accomplished by placing the pump inside a three or four inch diameter PVC pipe with end cap. Hot water from the steam cleaner jet will be directed inside the PVC pipe and the pump exterior will be cleaned. The hot water from the steam cleaner will then be pumped from the PVC pipe through the pump and collected into another container. Note: additives or solutions should not be added to the steam cleaner.

Pump non-phosphate detergent solution through the inside of the pump. If the solution is recycled, the solution must be changed periodically.

Pump potable water through the inside of the pump to remove all of the detergent solution. If the solution is recycled, the solution must be changed periodically.

Pump distilled/deionized water through the pump. The final water rinse must not be recycled.

VI. FIELD QUALITY CONTROL

Quality control samples are required to verify that the sample collection and handling process has not compromised the quality of the ground water samples. All field quality control samples must be prepared the same as regular investigation samples with regard to sample volume, containers, and preservation. The following quality control samples shall be collected for each batch of samples (a batch may not exceed 20 samples). Trip blanks are required for the VOC samples at a frequency of one set per VOC sample cooler.

Field duplicate.

Matrix spike.

Matrix spike duplicate.

Equipment blank.

Trip blank (VOCs).

Temperature blank (one per sample cooler).

Equipment blank shall include the pump and the pump's tubing. If tubing is dedicated to the well, the equipment blank will only include the pump in subsequent sampling rounds.

Collect samples in order from wells with lowest contaminant concentration to highest concentration. Collect equipment blanks after sampling from contaminated wells and not after background wells.

Field duplicates are collected to determine precision of sampling procedure. For this procedure, collect duplicate for each analyte group in consecutive order (VOC original, VOC duplicate, SVOC original, SVOC duplicate, etc.).

If split samples are to be collected, collect split for each analyte group in consecutive order (VOC original, VOC split, etc.). Split sample should be as identical as possible to original sample.

All monitoring instrumentation shall be operated in accordance with EPA analytical methods and manufacturer's operating instructions. EPA analytical methods are listed in 40 CFR 136, 40 CFR 141, and SW-846 with exception of Eh, for which the manufacturer's instructions are to be followed. Instruments shall be calibrated at the beginning of each day. If a measurement falls outside the calibration range, the instrument should be re-calibrated so that all measurements fall within the calibration range. At the end of each day, check calibration to verify that instruments remained in calibration. Temperature measuring equipment, thermometers and thermistors, need not be calibrated to the above frequency. They should be checked for accuracy prior to field use according to EPA Methods and the manufacturer's instructions.

VII.FIELD LOGBOOK

A field log shall be kept to document all ground water field monitoring activities (see attached example matrix), and record all of the following:

Well identification.

Well depth, and measurement technique.

Static water level depth, date, time and measurement technique.

Presence and thickness of immiscible liquid (NAPL) layers and

detection method.

Pumping rate, drawdown, indicator parameters values, and clock time, at the appropriate time intervals; calculated or measured total volume pumped.

Well sampling sequence and time of each sample collection.

Types of sample bottles used and sample identification numbers.

Preservatives used.

Parameters requested for analysis.

Field observations during sampling event.

Name of sample collector(s).

Weather conditions.

QA/QC data for field instruments.

Any problems encountered should be highlighted.

Description of all sampling equipment used, including trade names, model number, diameters, material composition, etc.

VIII. DATA REPORT

Data reports are to include laboratory analytical results, QA/QC information, and whatever field logbook information is needed to allow for a full evaluation of data useability.

EXAMPLE (Minimum Requirements) Page____of____

Well PURGING-FIELD WATER QUALITY MEASUREMENTS FORM

Location (Site/Facility Name)_____ Depth to _____/_____ of screen
Well Number_____Date_____ (below MP) top bottom
Field Personnel_____ Pump Intake at (ft. below MP)_____
Sampling Organization_____ Purging Device; (pump type)_____
Identify MP_____

Clock Time 24 HR	Water Depth below MP ft	Pump Dial[1]	Purge Rate ml/min	Cum. Volume Purged liters	Temp. °C	Spec. Cond.[2] µS/cm	pH	ORP/ Eh[3] mv	DO mg/L	Turb-idity NTU	Comments

1. Pump dial setting (for example: hertz, cycles/min, etc).
2. µSiemens per cm(same as µmhos/cm)at 25 °C.
3. Oxidation reduction potential (stand in for Eh).

GROUNDWATER SAMPLING WITH SPME USING PDMS-COATED GLASS FIBER—METHOD DESCRIPTION

SCOPE AND APPLICATION

This document describes the method for collecting groundwater samples using solid-phase microextraction (SPME). This method is consistent with and based upon the SPME sampling activities conducted at the site to date, and more specifically the method provided in the October 23, 2015 Draft Addendum 1 to the *Sampling and Analysis Plan (SAP): TCRA Cap Porewater Assessment* (Integral 2015).

The equipment and methods described herein are consistent with those that were developed for sampling porewater of the engineered cap at the San Jacinto River Waste Pits (SJRWP) for dioxins and furans, by Dr. Danny Reible at the University of Texas at Austin and others (Mayer et al. 2000; Gschwend et al. 2011; Lu et al. 2010 and 2011), Integral Consulting Inc., and Anchor QEA, LLC.

This method description was specifically developed for use in collection of information on concentrations of polychlorinated dibenzo-*p*-dioxins and dibenzofurans (2,3,7,8-TCDD, 2,3,7,8-TCDF, and 2,3,4,7,8-PeCDF) in groundwater at the SJRWP site. Methods for preparation of the SPME fibers, their deployment, retrieval, and processing are described.

SUMMARY OF METHOD

Sediment porewater concentrations can be measured *in situ* using SPME sampling devices (Mayer et al. 2000; Fernandez et al. 2009; Lu et al. 2010 and 2011). Groundwater concentrations may be similarly measured using SPME sampling devices deployed in monitoring wells. The technology discussed herein uses SPME sampling devices that consist of a glass fiber core coated with polydimethylsiloxane (PDMS; a polymer sorbent) placed in a protective deployment casing. The casing allows for deployment directly to the screened interval within a monitoring well avoiding physically damaging the fibers.

After monitoring well development using standard practices, the SPME sampling device is placed into monitoring well, centered at the well screen midpoint and exposed to ambient

groundwater for approximately 60 days to allow target chemicals in groundwater to achieve a high degree of equilibrium with the PDMS coating on the fiber. After the exposure period, the SPME sampling devices are retrieved and the PDMS-coated glass fibers are analyzed for concentrations of target analytes. The contaminant concentration that accumulates in the polymer sorbent at equilibrium is directly proportional to the dissolved contaminant concentration in groundwater. A proportionality constant, such as an octanol-water partitioning coefficient (K_{ow}), or a polymer-water partition coefficient (K_{fw}), in conjunction with an estimate of the fraction of equilibrium achieved, if necessary, can be used to estimate the concentration of each chemical in the groundwater sampled from the concentration in the PDMS coating. The accuracy of the groundwater concentration estimate depends on the type of proportionality constant used; refer to the TCRA Cap Porewater Assessment SAP (Integral and Anchor QEA 2012), Section 1.6.1 for a detailed discussion.

PDMS-coated fibers are the central element to this sampling method. These fibers are commonly used in optical applications. The fibers that will be used in this study will be 1,000-µm-diameter fibers with a 35-µm coating of PDMS, which corresponds to about 113.8 µL of PDMS per meter of fiber. The fiber (Part No. 1068020213) will be manufactured by Polymicro Technologies of Phoenix, Arizona, which produces the glass fibers with the PDMS coating. In production, they maintain quality control by regular measurement of the fiber coating.

Prior to deployment of a SPME apparatus into a monitoring well, an individual PDMS-coated glass fiber is placed into a grooved stainless steel plate approximately 76 cm (2.5 feet) long. The rectangular groove in the metal plate is approximately 2 mm wide. The fiber is secured in the groove by small, spaced stainless steel plates screwed into the larger plate on either side of the SPME fiber groove. The plate is placed into a protective mesh casing to allow unimpeded groundwater contact with the SPME fiber. The mesh enclosure is capped at either end with PTFE caps. The upper cap is fitted with an eye bolt or similar fastener to allow lowering into and retrieval from the monitoring well. Two SPME apparati are connected in series to be used as one sampling device—a total 152 cm (5 feet) of fiber is deployed as one sample in each well). The following is a conceptual diagram of the SPME apparatus planned for monitoring well deployment.

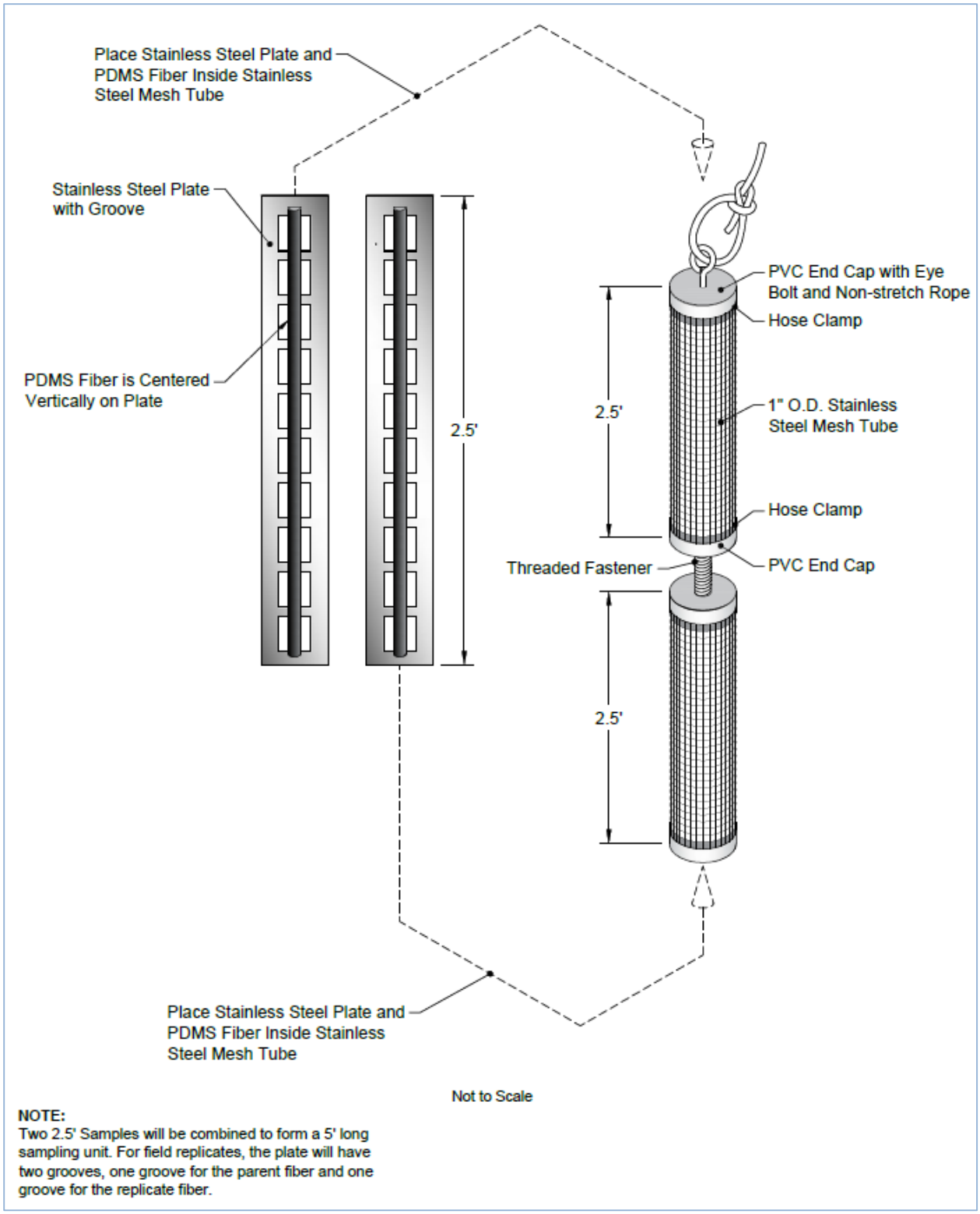

NOTE:
Two 2.5' Samples will be combined to form a 5' long sampling unit. For field replicates, the plate will have two grooves, one groove for the parent fiber and one groove for the replicate fiber.

Laboratory and Field Quality Control Samples

Quality assurance and quality control (QA/QC) samples will be collected in all major steps of this study. These samples will include the following:

- Samples collected during the preparation of the samplers to ensure that chemicals detected in samples after exposure in the field did not come from the original fibers themselves or from elements of the sampling apparatus.
- Samples collected during sampler deployment to ensure that contamination is not introduced during the transportation to and installation of the SPME sampling devices in the field.
- Samples collected during sampler retrieval to ensure that contamination is not introduced during the procedures of collecting the samplers in the field.
- Replicate samples to assess the variability of the results of samples in the field
- Preparation of materials to support laboratory internal quality control samples, including blank spikes, blank spike duplicates, and blank samples.

A summary of these QC samples is presented in Table 1. The details of QC sample preparation and collection are described in the appropriate section of the document below.

Table 1
Summary of Quality Control Samples

Sampler Preparation			
	SPME Blank	Ensure fibers do not contain 2,3,7,8-TCDD, 2,3,7,8-TCDF, or 2,3,4,7,8-PeCDF prior to deployment	1
	Solvent Rinse Blank	Ensure that decontamination of samplers prior to deployment is effective	2
	Fibers for Laboratory QC	Provide materials for laboratory internal matrix-specific quality control	Three 5 foot long fibers
Sampler Deployment			
	Field Replicate Samples	Assess field variability	2
	Environmental Blank	Assess if air-deposited SPME contamination occurs during sampler deployment	1
Sampler Retrieval			
	Environmental Blank	Assess if air-deposited SPME contamination occurs during sampler retrieval	1
	Temperature Blanks	Ensure that samples maintain proper temperature	One per shipping cooler

Notes:
2,3,4,7,8-PeCDF = 2,3,4,7,8-pentachlorodibenzo-*p*-dioxin
2,3,7,8-TCDD = 2,3,7,8-tetrachlorodibenzo-*p*-dioxin
2,3,78-TCDF = 2,3,7,8-tetrachlorodibenzofuran

SUPPLIES AND EQUIPMENT

Equipment required includes the following:

- Preparation
    1. Glass fiber coated with PDMS
    2. Sampling device, including the grooved mounting plate, fiber locking plates, mesh sheath and end caps
    3. Alconox®, Liquinox®, or equivalent industrial detergent

4. Performance reference compound (PRC) stock solution. PRCs for this study are ^{37}Cl-labeled 2,3,7,8-TCDD, ^{13}C-labeled 1,2,3,4-TCDF and ^{13}C-labeled 2,3,4,7,8-PeCDF[1]
5. Hexane, pesticide grade or equivalent
6. Distilled water
7. Properly-labeled squirt bottles
8. Polyethylene or polypropylene tub (to collect solvent rinsate)
9. Container tubes with caps on both ends, constructed from PTFE or equivalent and large enough to carry assembled samplers before deployment and after retrieval
10. Drying oven
11. Kimwipes®
12. Waterproof marker
13. Heavy-duty aluminum foil
14. Personal protective equipment as specified in the health and safety plan (e.g., nitrile gloves)

- Deployment

1. Prepared SPME sampling devices (two 2.5-foot long samplers per well, deployed in series to result in a 5 foot long unit)
2. Differential global positioning system (DGPS)
3. Watch
4. Water level indicator
5. Waterproof sample tags, waterproof marker, and cable ties
6. Sufficient nylon or other inert, non-expanding rope to extend from SPMEs to top of monitoring well
7. Personal protective equipment for field team (e.g., rain gear, steel-toed boots, nitrile gloves)
8. Health and safety plan
9. First aid kit
10. Cell phone
11. Logbooks, indelible blank-ink pens, and field forms

[1] PRCs will be applied to fibers designated for target congeners, as the PRCs are non-interfering.

- Retrieval
    1. Sample coolers and ice
    2. Container tubes with caps on both ends, constructed from PTFE or equivalent and large enough to carry assembled samplers before deployment and after retrieval
    3. DGPS
    4. Watch
    5. Water level indicator
    6. Sample tags, waterproof marker, and cable ties
    7. Heavy-duty aluminum foil
    8. Personal protective equipment for field team (e.g., rain gear, steel-toed boots, nitrile gloves)
    9. Health and safety plan
    10. First aid kit
    11. Cell phone
    12. Logbooks, indelible blank-ink pens, waterproof markers, and field forms
- Processing
    1. Kimwipes®
    2. Deionized water (analyte-free; received from testing laboratory or other reliable source)
    3. Heavy-duty aluminum foil
    4. Ceramic column cutter
    5. Ruler
    6. Hexane, pesticide grade or equivalent
    7. Auto-pipette, syringe, or other devices capable of delivering volumes of 1 mL and 2 mL
    8. 2-mL screw cap auto-sampler vials, amber glass
    9. Waterproof marker
    10. Personal protective equipment as specified in the health and safety plan

PROCEDURES

General Procedures

During all procedures discussed herein, the following general guidelines will be followed:

- Fiber samples will be handled with nitrile-gloved hands. At no point should skin contact fibers.
- Sampling and sample processing staff will endeavor to minimize the amount of time fiber samples are exposed to air to minimize the chance of cross contamination.
- The time, place, staff involved, and any deviations from this sampling plan will be rigorously documented in appropriate laboratory and/or field notebooks.

Preparation of Fibers and SPME Sampling Devices

Preparation of the SPME devices will take place in a laboratory prior to deployment in the field. As with all handing of fibers, clean nitrile gloves will be worn for all steps of the preparation process. The sampling devices will be disassembled and all surfaces of the individual pieces will be washed with Alconox® (or Liquinox®) and hot water. This wash will be followed by a sequential series of rinses of the pieces of the device with hexane, acetone and distilled water, followed by air drying.

Using one sampler, after the apparatus has been dried, the stainless steel plate that holds the PDMS-coated glass fibers inside the casing and the casing will be rinsed with hexane and the rinsate collected. In addition, prior to assembly of any samplers, all fibers will be rinsed with hexane, and the rinsate collected. This combined rinsate sample will be analyzed immediately and results obtained prior to deployment of samplers.[2] This rinsate will be analyzed as a solvent rinse blank for 2,3,7,8-TCDD, 2,3,7,8-TCDF, and 2,3,4,7,8-PeCDF. Staff preparing fibers will use sufficient volume of solvent to thoroughly rinse the sampling device, but not generate excess solvent.

[2] If it is not possible to collect and analyze a single rinsate blank for all fibers associated with the study, and to obtain results prior to deployment of samplers, rinsate blanks for individual fibers may be needed to ensure that each individual fiber is uncontaminated upon deployment. Individual rinsate blanks will allow investigators to address contamination of samplers on an individual sampler basis.

One fiber (two of 2.5 feet long fibers, total 5 feet long) spiked with PRCs will be used at each well. The PRCs are different than the target chemicals (i.e., $^{13}C_{12}$ or ^{37}Cl isotope labeled), surrogates, and internal standards. As such, one fiber will be deployed for target congener and PRCs in designated deployment devices.

With 14 stations to be sampled, the following fibers will be prepared:

- Thirty-two fibers (two 2.5 feet long fibers, total 5 feet long) and fiber deployment equipment for field samples at 14 stations with two replicates.[3]
- The total fiber length will be 5 feet (152 cm) per sampling location (two 2.5 foot sections in two samplers in series) to optimize analytical resolution.
- Four 2.5 foot fibers for two backup samplers.
- One 5 feet (152 cm) fiber for an SPME blank.
- One 5 feet (152 cm) fiber for a deployment environmental blank sample.
- One 5 feet (152 cm) fiber for a retrieval environmental blank sample.
- Five 5 feet (152 cm) PRC fibers to assess initial PRC concentrations.
- Three 5 feet (152 cm) sample fibers for laboratory QC samples.
- Each sampling device will include one fiber (two of 2.5 feet (76 cm) long fiber is considered as "one fiber"), so the number of fibers that will be cleaned will equal the number of samplers to be assembled, plus the additional fibers prepared for QC samples.

The PDMS-coated glass fibers will be spiked with the PRCs. The PRC-spiked fibers are used: 1) to collect target analytes in the groundwater, 2) to estimate the fractional extent of equilibrium of the fiber with the groundwater using PRCs.

Prior to assembly, the PDMS-coated glass fibers will be cleaned by soaking in solvent overnight, with hexane as the solvent for the sampling fibers. As is standard throughout this procedure, the fibers will be handled using nitrile-gloved hands. After the PDMS-coated glass fibers have soaked overnight, the fibers will be rinsed with distilled water, and blotted dry with Kimwipes®. After cleaning, the PRC-spiked fibers are prepared by spiking a known

[3] Replicate fibers will be deployed using a plate with two grooves, to allow co-location with the replicate's parent fiber (placed in the other groove).

volume of the PRC reference stock solution (which will be mixed with a carrier such as methanol first) into a known volume of methanol-water mixture with volume ratio 70/30 in a volumetric flask and mixing well (at least 10 full inversions), to produce a soaking solution with a specific concentration. The PDMS-coated glass fibers to be spiked with PRC will be placed into a 5-cm-by-1-m glass tube with screw cap ends with Teflon sealed caps, and tumbled for a minimum of 21 days. After tumbling, five of the PRC-spiked fibers will be analyzed to determine the PRC concentrations in the PDMS of the PRC-spiked fibers.

The sampling devices themselves will be prepared after all the PRC-spiked fibers are prepared. The PRC-spiked fiber will be placed into the groove in the stainless steel plate. To make sure the fiber is securely in place, a clean, nitrile-gloved finger should be run along the groove, and the additional locking plates should be screwed into place, taking care not to pinch the fiber. In the cases of samplers that also contain a field replicate fiber, a second groove fabricated in the parent fiber plate will be used. Then, the plate will be inserted into the protective stainless steel mesh casing, and the casing will be closed with pre-fitted Teflon end caps at both ends, secured by hose clamps or similar. One complete sampler will be rinsed with hexane followed by deionized water and the rinsate collected as a second rinsate blank, to ensure that samplers are not contaminated prior to deployment.

Each of the samplers will be labeled with a unique sampler number using a waterproof marker on each PTFE cap. The length of fiber loaded onto each sampling device will be documented to the nearest millimeter, and the length entered in the laboratory notebook for that sampler. After assembly, each sampling device will be wrapped individually in aluminum foil and stored in a sealed container (e.g., modified PTFE tube with caps) in a secure location prior to deployment.

Sample Custody and Shipping

Sample custody will be maintained in accordance with procedures outlined in the Field Sampling Plan (FSP). Samplers prepared and stored in the SPME laboratory will be documented on chain-of-custody (COC) forms, and maintained in a secure location at the laboratory prior to deployment. Upon deployment, COCs will be signed by the SPME laboratory into the custody of the Anchor QEA field lead. At the time of retrieval, a second

set of COCs will be completed in the field, and used to document custody of samplers through analysis at the analytical laboratory.

Summary of Analytical and Quality Control Samples Developed during Sampler Preparation

The following analytical samples will be collected during sampler preparation:

- An SPME fiber blank sample. This sample consists of an SPME sampling device that is identical to the SPME sampling devices that are deployed in the field. Following preparation, the SPME blank will be stored in foil, placed in a sealed container and shipped to the analytical laboratory just prior to the field event. The SPME field blank will be stored by the analytical laboratory at 4±2°C. The SPME field blank will be analyzed at the same time as those that were deployed in the field.
- A solvent rinse blank sample of all sample fibers and a single cleaned apparatus prior to assembly.
- A solvent rinse blank of a fully assembled sampler collected prior to deployment.
- Five PRC-spiked fibers for analysis of the initial PRC concentration in the fibers.

In addition to the samples sent to the laboratory, the following materials will be prepared for subsequent QC analysis:

- One fiber for a deployment environmental blank sample
- One fiber for a retrieval environmental blank sample
- Three 5-feet sample fibers for laboratory QC samples.

DEPLOYMENT

SPME samplers will be deployed by the field crew following monitoring well development. Before the deployment of any SPME devices, the field team will shut off all petroleum-driven motors, and put on fresh nitrile gloves before handling the foil-wrapped, prepared SPME sampling devices. The prepared SPME sampling device will be removed from the airtight transportation container and the aluminum foil protective wrap will be removed. The screened interval of the monitoring well will be confirmed and an appropriate length of nylon or other inert, non-stretch rope will be cut to allow deployment of the midpoint of sampler at the midpoint of the screened interval. The sampler will be carefully lowered into

the well, minimizing contact with the well casing and screen and the correct deployment depth will be verified. The rope will then be firmly tied off or otherwise affixed in the well to prohibit vertical movement of the sampler in the well casing during the deployment period. In the case of flush-mount wells, care will be taken to ensure the well head is watertight using expandable well caps, and fixation of the sampler rope inside the well casing.

After deployment, the SPME sampling devices will be left in situ for approximately 60 days.

Deployment Quality Control Samples

The following field QC samples will be collected in the field during SPME sampling device deployment and analyzed by the analytical laboratory:

- Field replicate samples are at locations SJMW004D and SJMW012 and collected in an identical manner over the same exposure period to provide a measure of the field and laboratory variance, including variance resulting from sample heterogeneity. Field replicate samples will be prepared by including the fiber in the same SPME sampling device containing the parent fiber and submitting them for analysis as separate samples. Each fiber will be assigned a unique sample number in the field and will not be identified as field splits to the laboratory.
- The environmental blank is prepared in the field to evaluate potential background concentrations present in the air during deployment.
- To prepare an environmental blank in the field, the foil is removed from a prepared SPME sampling device while at a sample collection site, the SPME is exposed to the ambient air during the period of deployment of one sampler, and then resealed in the foil. The environmental blank is assigned a unique sample number according to the sample numbering scheme. The environmental blank will then be placed in a sealed container and taken or shipped to the analytical laboratory. The SPME environmental blank will be stored by the analytical laboratory at 4±2°C, and analyzed at the same time as those that were deployed in the field.

Field Measurements

Water level measurements will be collected at every monitoring well location. The depth of each sampler deployment will also be recorded.

Station Location Coordinates

Station locations for all field sampling have been or will be determined using a DGPS during monitoring well installation. The accuracy to which the latitude and longitude of a station location is determined is specified in the FSP.

Retrieval

After completion of the exposure period of approximately 60 days, the field team will return to each sampling location to retrieve the SPME sampling devices.

Once on station, all petroleum-driven motors will be turned off.

Before retrieving a SPME sampling device, sampling personnel will put on a new, clean pair of nitrile gloves at each station. Once the sampler is located and its current deployment depth verified, the SPME sampling device will then be carefully and slowly retrieved from the monitoring well, using care not to contact the well casing. Only one SPME sampler will be collected and handled by the field crew at a time.

The SPME sampling device will be disconnected into two 2.5-foot section and immediately wrapped in aluminum foil and placed into a sealed container, and stored in a cooler on ice at 4±2°C.

The following information will be recorded in the field logbook:

- Date and time that the SPME sampling device was retrieved
- Deployment depth
- Station number
- Sampler number
- Water level (taken prior to sampler removal)
- Notation of any petroleum-driven motors operating in the vicinity

- Evidence of water inside the protective flush mount or stickup casing but outside the well casing
- DGPS station location coordinates
- Photograph number for a specific station
- Information on the description of the area near the station (e.g., vegetation, debris, evidence of surface disturbance)
- Information on the SPME sampling device (e.g., damages and fouling on the stainless steel casing, damages on SPME fibers)

Field Quality Control Samples

Details on collection of field quality control samples (e.g., field replicate SPME sampling devices) are specified in the project-specific FSP and above. At a minimum, the following field QC samples will be collected in the field during SPME sampling device retrieval and analyzed by the analytical laboratory:

- An environmental blank will be collected during sample retrieval. The environmental blank will be prepared in the field by removing the foil from prepared SPME sampling device while at a sample collection site, exposing the SPME during the time that the well is opened, sampler(s) retrieved and the well closed, and then resealing it in the foil. The environmental blank will be assigned a unique sample number. The foil-wrapped environmental blank will then be placed in an appropriate closed container and taken or shipped to the analytical laboratory. The SPME environmental blank will be stored by the analytical laboratory at 4±2°C. The SPME environmental blank will be analyzed at the same time as those that were deployed in the field.
- Temperature blanks will be used by the laboratory to verify the temperature of the samples upon receipt at the testing laboratory. Temperature blanks will be prepared at the testing laboratory by pouring distilled/deionized water into a vial and tightly closing the lid. The blanks will be transported unopened to and from the field in the cooler with the sample containers. A temperature blank shall be included with each sample cooler shipped to the testing laboratory.

Sample Custody and Shipping

Sample custody will be maintained in accordance with procedures outlined in the FSP. Upon retrieval, a second set of COCs will be prepared by the field team, and will accompany the samplers the transfer to the analytical laboratory. All samples will be packaged and shipped (or may be delivered by courier) in accordance with procedures outlined in SOP AP-01, *Sample Packaging and Shipping*.

Processing

SPME sampler processing will take place at the Anchor QEA laboratory in Portland, Oregon. The SPME sampling device will be dismantled and the fiber carefully removed from the inner stainless steel plate using nitrile-gloved hands. Each fiber will then be rinsed with deionized water and placed on a foil-covered surface. If the fibers are broken upon arrival or at the time of removal from the sampling device, the sample handler will maintain the relative vertical position of the pieces. The overall length of the fiber recovered will be documented to the nearest millimeter in the laboratory bench sheet or log book, including notation of any missing pieces or broken fibers. Each fiber will be rinsed thoroughly with deionized water.

One 60-mL amber glass vial will be prefilled with 50 mL of hexane. These vials will be labeled with a waterproof marker noting the solvent (i.e., water) and volume used. If the samples are prepared at the analytical laboratory, the laboratory blank will be prepared using DI water as is placed into the vials.

A ceramic column cutter will then be used to section the fiber from each location into 10-cm lengths, and the lengths will be recorded. The 10-cm lengths will then subsequently be placed into prefilled 60-ml amber glass vials. Between each cut of fiber required for a unique sample (within a given sampling device), the ceramic column cutter will be decontaminated.

The cap on the vial will be sealed and, using a waterproof marker, labeled with the sample ID, total length of segments in the vial, date and time the sample was processed, and the analysis to be conducted; this information will also be noted on the laboratory bench sheet or logbook. The meniscus of the solvent will be marked on the vial with a waterproof marker.

REFERENCES

Fernandez, L.A., C.F. Harvey, and P.M. Gschwend, 2009. Using performance reference compounds in polyethylene passive samplers to deduce sediment porewater concentrations for numerous target chemicals. Environ. Sci. Technol. 43:8888–8894.

Gschwend, P.M., J.K. MacFarlane, D.D. Reible, X. Lu, S.B. Hawthorne, D.V. Nakles, and T. Thompson, 2011. Comparison of polymeric samplers for accurately assessing PCBs in porewaters. Environ. Toxicol. Soc. 30(6):1288-1296.

Lu, X., A. Skwarski, B. Drake, and D. Reible, 2010. Predicting bioavailability of PAHs and PCBs with porewater concentrations measured by solid-phase microextraction fibers. Environ. Toxicol. Chem. 30(5):1109–1116.

Mayer, P., W.H.J. Vaes, F. Wijnker, K.C.H.M. Legierse, R.H. Kraaij, J. Tolls, and J.L.M. Hermens, 2000. Sensing dissolved sediment porewater concentrations of persistent and bioaccumulative pollutants using disposable solid-phase microextraction fibers. Environ. Toxicol. Chem. 34:5177–5183.

ATTACHMENT A-2
FIELD FORMS

ANCHOR QEA

LOG OF EXPLORATORY BORING

CLIENT/PROJECT NAME_____ BORING #_____

PROJECT NUMBER_____ DATE BEGAN_____

GEOLOGIST/ENGINEER_____ DATE COMPLETED_____

DRILLING CONTRACTOR_____ TOTAL DEPTH_____

DRILLING METHOD_____ SHEET_____OF_____

HOLE DIAMETER_____

OTHER*	WELL OR PIEZOMETER DETAILS	SAMPLING DATA						DEPTH IN FEET	SOIL GROUP SYMBOL (USCS)	Field location of boring LITHOLOGIC DESCRIPTION
		SAMPLING METHOD	SAMPLE NUMBER	FID / PID (ppm)	RECOVERY (feet)	BLOWS / 6 INCHES	DEPTH SAMPLED			
								1		
								2		
								3		
								4		
								5		
								6		
								7		
								8		
								9		
								0		
								1		
								2		
								3		
								4		
								5		
								6		
								7		
								8		
								9		
								0		

Remarks:

WELL DETAILS

Project Number: _____ Boring/Well No.: _____

Client Name: _____ Top of Casing Elev.: _____

Project Name: _____ Ground Surface Elev.: _____

Location: _____ Installation Date: _____

Driller: _____ Permit/Start Card No.: _____

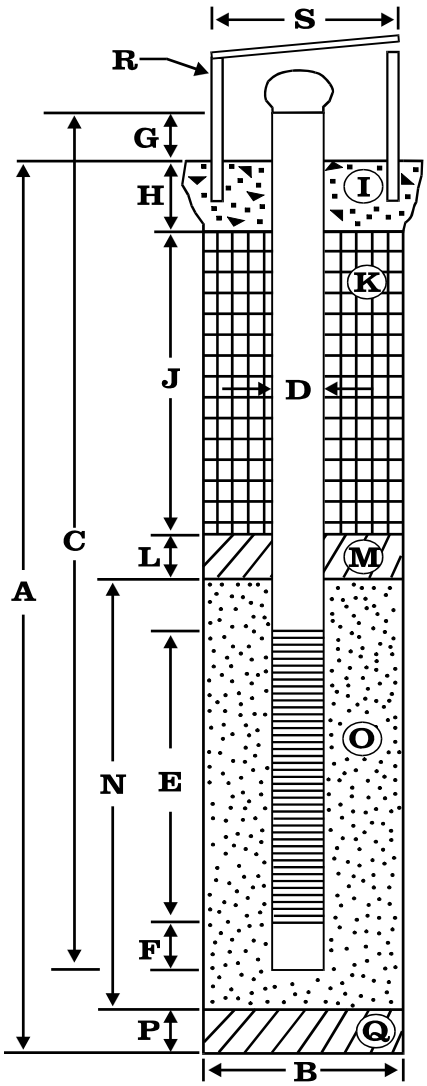

Depth (feet)	Elev. (ft, msl)

Installed by: _____

Reviewed by: _____

Date: _____

EXPLORATORY BORING

A. Total depth: _____ **ft.**

B. Diameter _____ **in.**

Drilling method: _____

WELL CONSTRUCTION

C. Well casing length: _____ **ft.**

Well casing material: _____

D. Well casing diameter: _____ **in.**

E. Well screen length: _____ **ft.**

Well screen type: _____

Well screen slot size: _____ **in.**

F. Well sump/end cap length: _____ **ft.**

G. Well casing height (stickup)**:** _____ **ft.**

H. Surface seal thickness: _____ **ft.**

I. Surface seal material: _____

J. Annular seal thickness: _____ **ft.**

K. Annular seal material: _____

L. Filter pack seal thickness: _____ **ft.**

M. Filter pack seal material: _____

N. Sand pack thickness: _____ **ft.**

O. Sand pack material: _____

P. Bottom material thickness: _____ **ft.**

Q. Bottom material: _____

R. Protective casing material: _____

Well centralizer depths: _____ **ft.**

S. Protective casing diameter: _____ **in.**

NOTES:

WELL DEVELOPMENT FORM

Project No.	Date:	Well:
Site Location:	Initial DTB:	Final DTB:
Name:	Initial DTW:	Final DTW:
Development Method:	Casing Volume:	
Total Water Removed:	Casing Diameter:	
Water Contained ?	Meter #:	
Estimate of specific capacity or recharge to well:		

Time	Cum. Vol. Removed	Turbidity	Dissolved Oxygen	Specific Conductance	Temperature	pH	ORP	DTW (TOC)	Appearance/Comments

WATER LEVEL DATA SHEET

ANCHOR QEA

PROJECT NAME:

SITE ADDRESS:

WIND FROM:	N	NE	E	SE	S	SW	W	NW	LIGHT	MEDIUM	HEAVY
WEATHER:	SUNNY		CLOUDY		RAIN		?		**TEMPERATURE:**	° F . ° C	

[Circle appropriate units]

HYDROLOGY/LEVEL MEASUREMENTS (Nearest 0.01 ft)

Well ID	Date	Time (Equil.)	Time (Meas.)	DT-Bottom	DT-Product [Product Thickness]	DT-Water [Water Column]	DTP-DTW	DTB-DTW [Water Column x Gal/ft]
	/ /	:	:	.	.	.	.	.
	/ /	:	:	.	.	.	.	.
	/ /	:	:	.	.	.	.	.
	/ /	:	:	.	.	.	.	.
	/ /	:	:	.	.	.	.	.
	/ /	:	:	.	.	.	.	.
	/ /	:	:	.	.	.	.	.
	/ /	:	:	.	.	.	.	.
	/ /	:	:	.	.	.	.	.
	/ /	:	:	.	.	.	.	.
	/ /	:	:	.	.	.	.	.
	/ /	:	:	.	.	.	.	.
	/ /	:	:	.	.	.	.	.
	/ /	:	:	.	.	.	.	.
	/ /	:	:	.	.	.	.	.
	/ /	:	:	.	.	.	.	.
	/ /	:	:	.	.	.	.	.
	/ /	:	:	.	.	.	.	.
	/ /	:	:	.	.	.	.	.
	/ /	:	:	.	.	.	.	.
	/ /	:	:	.	.	.	.	.
	/ /	:	:	.	.	.	.	.
	/ /	:	:	.	.	.	.	.
	/ /	:	:	.	.	.	.	.
	/ /	:	:	.	.	.	.	.
	/ /	:	:	.	.	.	.	.
	/ /	:	:	.	.	.	.	.
	/ /	:	:	.	.	.	.	.
	/ /	:	:	.	.	.	.	.
	/ /	:	:	.	.	.	.	.
	/ /	:	:	.	.	.	.	.
	/ /	:	:	.	.	.	.	.
	/ /	:	:	.	.	.	.	.
	/ /	:	:	.	.	.	.	.
	/ /	:	:	.	.	.	.	.

SAMPLER:

(PRINTED NAME) (SIGNATURE)