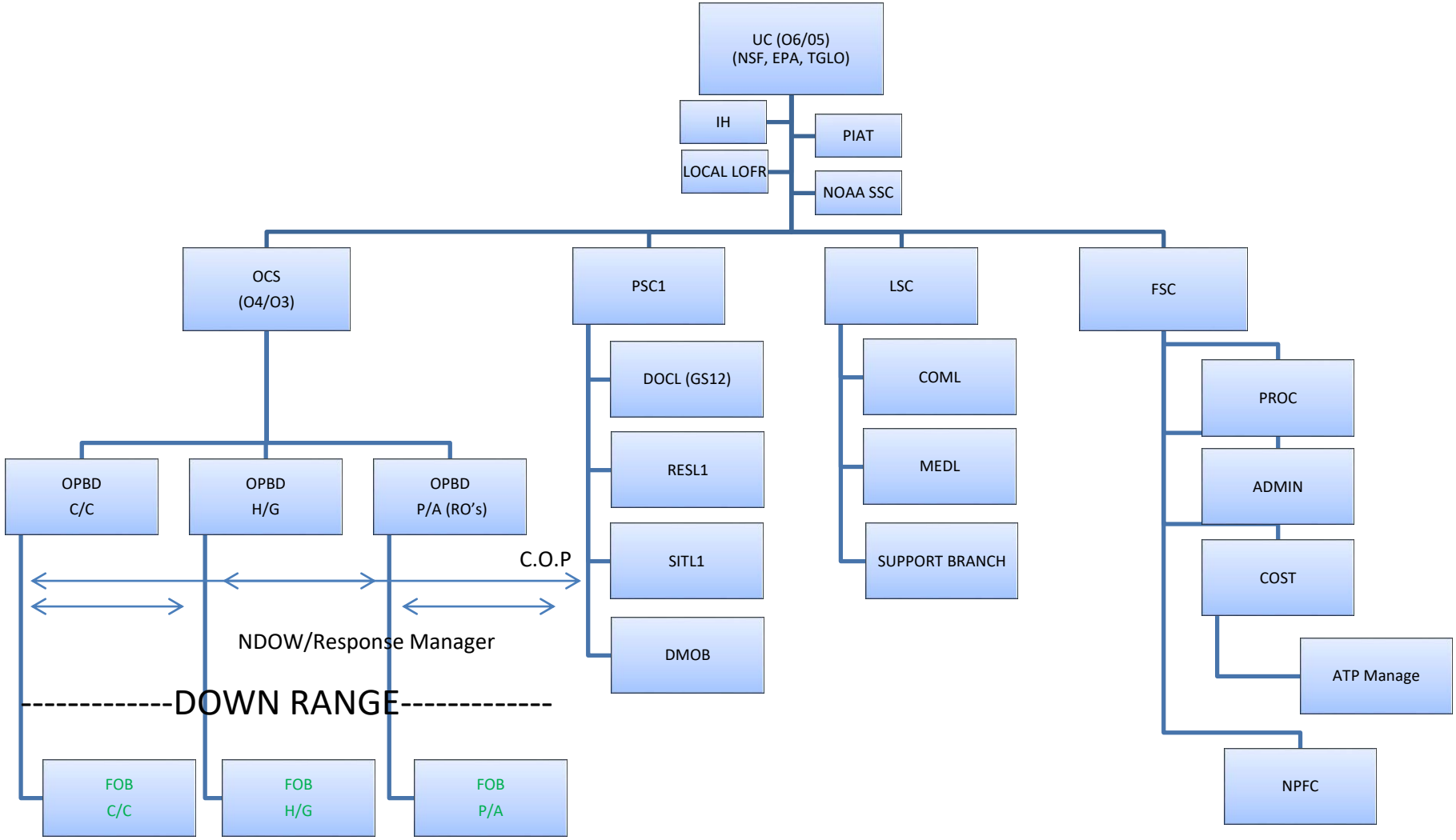

*RO/RS's with RT/RM/M

Communication: ⟷

7034888

*RO/COMMOFFS, RS's with RT/RM/M

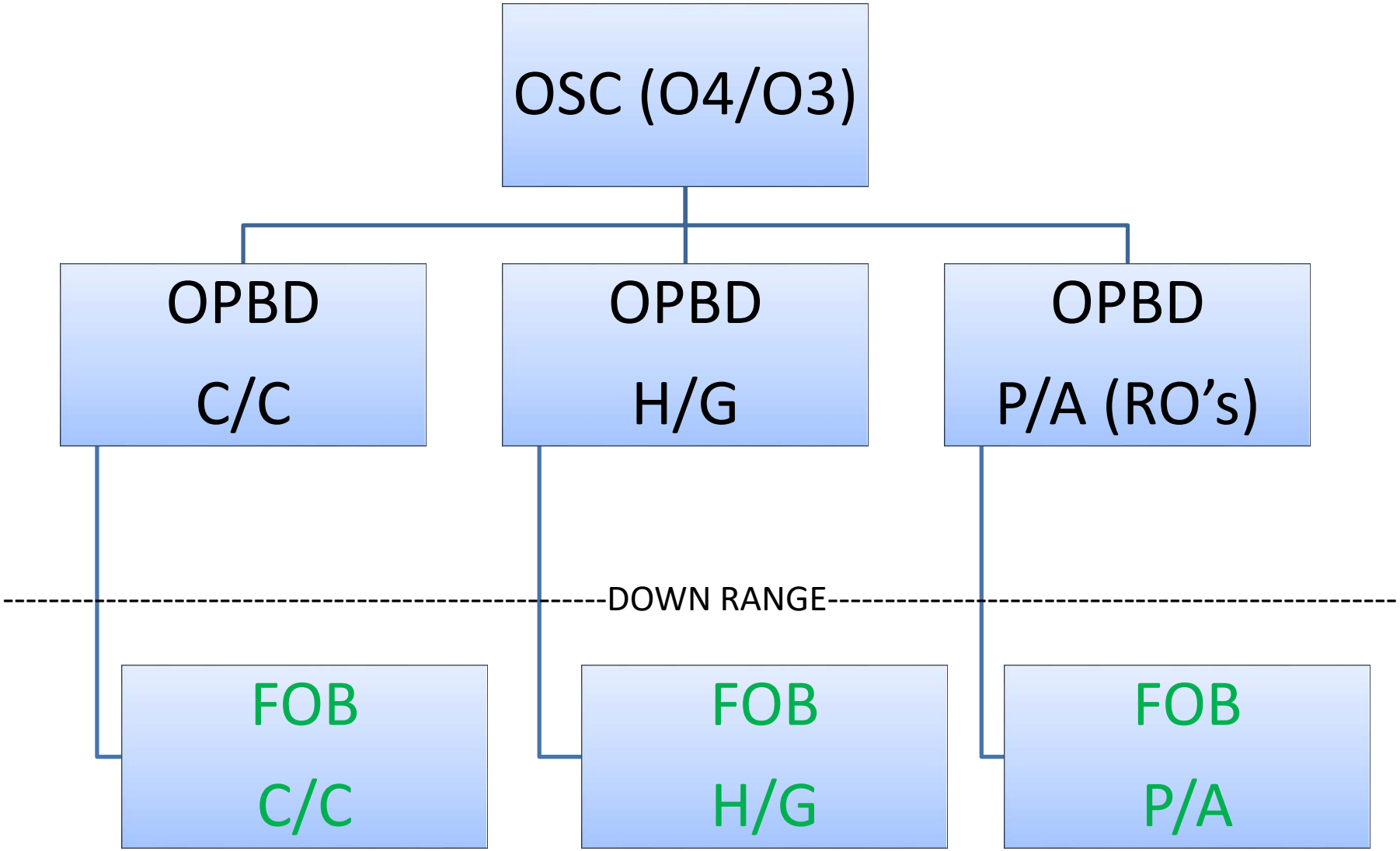

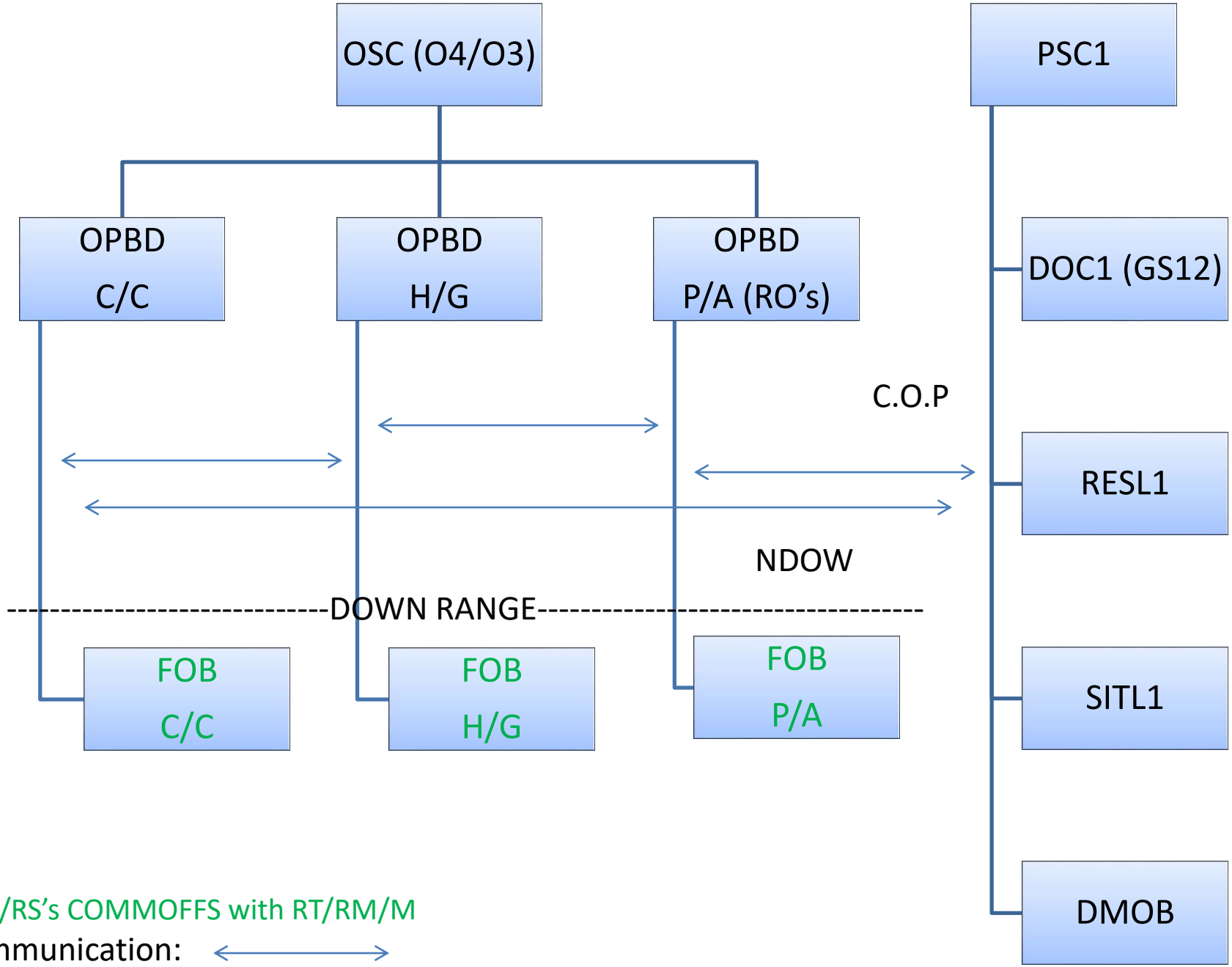

*RO/RS's COMMOFFS with RT/RM/M

Communication: ⟷