SITE VISIT AND RECONNAISSANCE

PURPOSE

This SOP was developed to promote uniformity in investigating and evaluating potential health and safety hazards at sites. A site visit generally refers to inspection activities of the subject property. Site reconnaissance expands the site visit to include observations to identifying potential health and safety hazards, and in some cases recognized environmental conditions.

This SOP does not attempt to address all circumstances that could be encountered during a site visit or reconnaissance, but can provide a baseline for recognition. It should be noted that seemingly safe sites or situations may still present life-threatening conditions. Personnel conducting site visits or site reconnaissance should be alert and aware of surroundings and conditions at all times.

Relevant EHS Support SOPs

- SOP-04 Field Documentation

Required Materials

- Field logbook and field documentation
- Site maps, site layouts, site plans
- Health and Safety Plan
- Appropriate personal protective equipment (PPE)
- Black waterproof and/or indelible ink pens
- Camera
- Monitoring or sampling equipment to evaluate hazards, as necessary.

1.0 SITE VISIT AND RECONNAISSANCE PROCEDURE

1.1 Site Visit Preparation

A properly conducted site visit or reconnaissance should include procurement of available site details in preparation of a site visit as follows:

1. Obtain information about the site (current and historical).
2. Obtain information, if able, about hazardous materials or waste handling at the site. The hazardous material and waste handling information can be used to assess if any or all of the site conditions described below may require additional monitoring.
3. Obtain site-specific details to the on-site health and safety program and requirements.
4. Obtain site-specific information (current and historical), if able, about site practices and processes of hazards or potential hazards to the best extent possible and able. Considerations may include (but is not limited to):
    a. Facility occupancy (e.g., abandoned, operational)
    b. Locations that may require special training due to:
        - Oxygen-deficient atmospheres
        - Explosive atmospheric conditions
        - Potential for chemical vapors
        - Unexploded ordnance
        - Radioactivity
        - Confined space
        - Presence of asbestos or lead.
    c. Physical hazards:
        - Electrical hazards (down or exposed power lines)
        - Unsafe structures or deteriorated buildings, tanks, supports, or beams that are in the process of collapsing (or based on physical evidence may collapse at any time)
        - Pits (open or closed)
        - Trenches and sumps
        - Buried tanks or structures
        - Any type of elevated, surface, or subsurface structure that may fall, cause an employee to trip or fall, or cause an employee to fall into it
        - Hazards of concern with heavy equipment (backhoe, drill rig, etc.)
        - Biological hazards (plants, insects, snakes)
        - Noise hazards
        - Asbestos, lead, or other material that creates an exposure hazard
        - Weather (lightning, heat, and cold stress)
        - Traffic, including trains or facility-vehicles.
5. Prepare a Health and Safety Plan (HASP) that satisfies the requirements of the Occupational Safety and Health Administration (OSHA) as defined in the Code of Federal Regulations 29 Code of Federal Regulations (CFR) 1910.120. Evaluation of health and safety hazards in the HASP should consist of reviewing and summarizing existing site data; preparing a site HASP; and use of monitoring or sampling equipment as necessary for the site visit, reconnaissance, or investigation.
6. Worker safety will be evaluated by the Project Manager and the EHS Support Health and Safety Manager prior to mobilization.
7. The HASP will be reviewed and signed by the EHS Support Health and Safety Manager. Team members must comply with the site HASP.

1.2 Site Walk Inspection

The site visual inspection will be conducted by doing a walkover of the entire site. Under some conditions (e.g., large facility, abandoned facility, unsafe site conditions), it may be required to have two or more persons conducting the reconnaissance. Attention should be given to potential health and safety hazards or hazard indicators associated with the site walk or the inspection. (Note: A hazard indicator may not represent a hazard directly but may indicate an activity has occurred in relation to a potential hazard. For example, an installed soil vapor extraction system may not be a hazard, but represents a condition exists in the soil that requires or required attention.)

During the site visit or reconnaissance, field observations should be given, but are not limited to:

- Physical features of man-made structures (e.g., locations and dimensions of buildings)
- Surface features (e.g., ditches, pits)
- Current site and facility use
- Building use (e.g., office, manufacturing, residential, including buildings having basements)
- Surrounding area use (e.g., residential, industrial, vacant)
- Facility or site features, including:
    - Site boundaries and fencing
    - Types, location, and layout of utilities
    - Presence and type of bulk storage vessels (underground or above ground)
    - Confined space locations
    - Water features (e.g., streams, ponds, impoundments)
    - Paved, non-paved, diked, or improved locations
    - Liquid and/or solid waste disposal practices
    - Location(s) and content(s) of managed or unmanaged waste
    - Location of drum or container storage areas
    - Waste water or liquid discharge types and locations
    - Location of outfalls, if applicable
    - Secondary containment
    - Type and location of treatment facilities (i.e., waste water treatment, disposal units)
    - Points of interest that may indicate the presence of potentially hazardous conditions (e.g., oxygen deficiency, explosive atmospheres, high vapor or radioactivity levels, pipelines, septic fields, leachate fields, oil/water separators, or other physical hazards)
    - Locations and types of tanks, floor drains, stained soil, or stressed vegetation
    - Pad or pole-mounted transformers that could polychlorinated biphenyls (PCBs)
    - Buildings or locations that could contain PCBs, asbestos, or lead
    - Dust conditions
    - Air emissions and control measures (e.g., production from spray painting, mechanical exhaust, burning fuel)
    - Presence of monitoring wells
    - Presence of historical or on-going remedial activities (e.g., groundwater extraction systems, soil vapor extraction systems, investigative., former boring locations)
- Other potential hazards identified by the field team (e.g., biological, noise, etc.)
- Photographs will be taken to document the site visit or reconnaissance. A photographic log will be maintained. Refer to SOP-04 Field Documentation for guidelines to photographic collection and maintaining a photographic log.
- Any site-specific documentation (e.g., drawings, MSDS, site processes) will be collected.
- Sketches or marked copies of the site layout should be maintained in the field logbook or field documentation.
- Record the site visit or reconnaissance observations in the field logbook or field documentation.

2.0 RECORDS

Field logbook and field documentation will be completed in accordance with SOP-04: Field Documentation. Field documentation will be kept in the project file and may include:

- Field logbook or field documentation
- Site layout maps
- Sketches
- Photographs
- Obtained site-specific documents (e.g., tank inventory, utility drawings, reports, material safety data sheets).

UTILITY CLEARANCE

PURPOSE

The purpose of this SOP is to ensure all aboveground and subsurface utilities (e.g., electrical lines, gas lines, telephone lines, etc.) are located, marked, and cleared prior to initiating any intrusive activities (drilling, test pits, trenching). Compliance with this procedure will allow the work to be conducted safely and will prevent damage and disruption to existing utilities.

Most often, other parties with experience in locating subsurface utilities conduct this activity. However, site field personnel oversee such operations and clearly have a responsible role in understanding the specific steps that shall be performed.

Relevant EHS Support SOPs

- SOP-04 Field Documentation

Attachments

- Attachment A Utility Clearance Checklist

Required Materials

- Field logbook and field documentation
- Site maps, site layouts, site plans
- Health and Safety Plan
- Appropriate personal protective equipment (PPE)
- Black waterproof and/or indelible ink pens
- Spray paint
- Tape measure
- Camera
- Flagging tape
- Hand auger or post-hole digger
- Facility as-built drawings
- Replacement batteries or parts for instruments, if applicable
- Global positioning systems or geophysical location methods (ground penetrating radar), if applicable.

1.0 UTILITY CLEARANCE PROCEDURES

The potential for encountering unknown utilities is a hazard to be recognized. This SOP is to be used in conjunction with the project-specific Health and Safety Plan (HASP). Utility clearance is required before conducting any of the following work:

- Intrusive work of any nature, including, but not limited to, excavation, drilling, trenching, installing drive points, or penetrating the components of a building structure.
- Use of heavy equipment, or undertaking raising or hoisting operations.
- Work near electrical lines or utility installations.

1.1 Preparation and Initial Notification Procedures

Prior to mobilization to the field, available information will be collected to help identify the location of above ground and subsurface utilities. The EHS Support Utility Clearance Checklist (**Attachment A)** will be completed by a competent person prior to commencement of intrusive activities. Any variance request to the Utility Clearance Checklist must be reviewed and approved by the EHS Support Project Manager. The Utility Clearance Checklist includes minimum clearance requirements and is to be used in addition to consultant-specific requirements.

Participation in the planning of proposed work locations and utility clearance procedures should include the EHS Support project manager, the client project manager, all field personnel, on-site managers, and engineers, subcontractors actively working on the job, and anyone that may be responsible. To plan for the utility clearance:

1. Gather site-specific information where the investigation will be conducted. This information should include but is not limited to:
    - The Site or Facility name, if applicable
    - Site address
    - Nearest cross street or street intersection
    - Map grid, if applicable
    - Site boundaries
    - As-built drawings
    - Map indicating boring location or excavation location
2. Three lines of evidence, at a minimum, shall be obtained. Lines of evidence may include:
    - As-built drawings
    - Statement from and site walk with site contact who is familiar with property
    - Discussion with a landowner of subsurface utilities
    - Marked utilities
    - Use of hand-held magnetic or magnetic-cable locating device to clear work area
    - Geophysical methods

    If three lines of evidence cannot be obtained, or where uncertainty exists concerning the presence of underground utilities, a private utility locating company using geophysical methods must be used to aid in locating utilities.
3. Conduct a site walk. Note any discrepancies or new information regarding utility locations and document in the field logbook or field documentation. The site walk may or may not include an on-site manager or engineer. The site walk is a good time to review and confirm overhead utility lines, and make necessary adjustments to boring or excavation locations (i.e., move the boring a safer distance from an overhead line).

4. If an overhead line is observed, first identify what type of line it is (e.g., telephone, electrical). If the line is an electrical line and the boring or excavation is required in the area, an inquiry to the on-site manager or the One-Call Service may be required to determine the overhead line voltage. The following gives required minimal clearance for working proximity to overhead power lines:

Table 1 Minimal Clearance for Overhead Power Lines

System Voltage	Minimum Distance Required Clearance
0 -50 kV	10 feet
51 - 100 kV	12 feet
101 - 200 kV	15 feet
201 - 300 kV	20 feet
301 - 500 kV	25 feet
501 - 750 kV	35 feet
751 - 1000 kV	45 feet

5. Mark proposed borehole locations with a dot using white spray paint. Additional tools that may aid in marking the boring include location by GPS or measured distances from a building.
6. Mark proposed excavation extent by using white spray paint in a continuous line, dots, or dashes marking the four corners.
7. Place a call to the federally-mandated national "Call Before You Dig" number, 811, at least 72 hours prior to field activities. Most One-Call Services require the subsurface contractor (i.e., drilling or excavation company) to contact the One-Call Service.
8. In the event EHS Support is considered the responsible party for subsurface work (e.g., hand auger projects), EHS Support will call the federally-mandated One-Call Service. (State specific information can be found on the "Call Before You Dig" website: www.call811.com.)
9. EHS Support will provide to the One-Call Service:
   - The Site or Facility name, if applicable
   - Site address
   - Nearest cross street or street intersection
   - Your contact name and phone
   - Anticipated field start date
   - Number of boreholes, or extent of excavation
   - If investigation area is on public or privately-owned property (in most cases, utility locate services are not required or allowed to enter private property)
   - Other information that may be useful in assisting the utility locate services
   - A joint utility locate meet may be requested – a time and date to meet at the investigation site will need to be agreed upon.
10. Public utility locate services are typically enrolled in the One-Call Service program. However, in a few cases (e.g., some local water and sewer utilities), the utility service is not. During the call with the One-Call Service, the call center is likely to provide that utility service name and/or contact phone number. If not, visit the "Call Before You Dig" website: www.call811.com. EHS Support is responsible for contacting those utility companies not enrolled, and providing them with the site-specifics as outlined in 9) to clear the investigation area.
11. On the EHS Support Utility Clearance Checklist, Public Utility Markout section, note the date and time of call, the utility clearance ticket number (provided by the One-Call Service), and any other information provided by the call center. The ticket number is used by the various utility companies to reference the clearance request. This ticket number is valid for a limited time (generally 14 days), but may be extended.

12. If a joint meet is requested with the utility services, prepare to mobilize to the investigation site and mark the boring location or excavation extent prior to their arrival.
13. Public utility locate service marking colors have a uniform color coding **(Figure 1)**, created by the American Public Work Association (APWA) (ANSI Z535.1). In general, utility providers adhere to the color code for consistency and safety.

RED	Electric Power Lines, Cables, Conduit and Lighting Cables
YELLOW	Gas, Oil, Steam, Petroleum or Gaseous Materials
ORANGE	Communication, Alarm or Signal Lines, Cables or Conduit
BLUE	Potable Water
PURPLE	Reclaimed Water, Irrigation and Slurry Lines
GREEN	Sewers and Drain Lines
WHITE	Proposed Excavation
PINK	Temporary Survey Markings

Figure 1 APWA Color-coded Chart for Utility Marking

14. The public utility companies will typically mark their subsurface lines up to the property lines unless a junction box or meter is present on the site. If able, request that the utility companies mark their utilities in the work areas on the site.
15. Because the State One-Call may only clear directly around the (publically) marked locations, it may be required to obtain third party verification. Third-party verification by geophysical and/or a survey by a licensed Land Surveyor is required when utility location information is limited to as-builts or the location of features such as valve boxes, manholes/handholes, conduit, and electrical components observed in the field.
    - Geophysical methods may include toning, ground-penetrating radar (GPR), pipe and cable location, electromagnetic survey, and magnetometry. The geophysical subcontractor shall provide a detailed and scaled drawing of utilities located on-site or equipment readout. The competent field person should request a field sketch or drawing of identified utilities or a copy of the equipment readout before the locator leaves the site.
    - A licensed land surveyor will survey the location of subsurface or concealed utilities indicated on as-built drawings or apparent only through visual observations of surface features; the survey should achieve a horizontal and vertical accuracy of 0.1 feet. The survey coordinates can be obtained and kept on file for future use. The land surveyor can also be used to stake the excavation or borehole locations.
16. For boreholes that have been cleared by a utility service provider
    - The provider or utility locate personnel may call the contact person and indicate the borehole(s) is cleared
    - May have an “OK” placed by the borehole in their specific utility color coding by the borehole.
17. If a borehole marking has not been cleared by the utility service provided, the utility locate service may call to indicate the location is unsafe and/or put a circle with a slash through it (Ø) with the in their specific utility color coding.
18. In the event, a borehole or excavation location cannot be located a safe distance from an energized source, an inquiry to the utility company and/or facility about the potential for shut down is required. It is unlikely that a utility company will comply with the request, as a shutdown may impact service to residence, facilities, etc. If a facility has the capability of the de-energizing the system internally with no repercussions, procedures for Lock Out/Tag Out to the system will apply.

1.2 Field Utility Clearance Procedures

Field utility clearance procedures are as follows:

1. Take photographs and detailed documentation of ground markings, flags, overhead lines, etc. Photographs, sketches, and measurements of utility locations in relation to the boring or excavation area may be useful in the event the markings are removed (e.g., cut grass, rain, heavy traffic). Photographs, sketches, and measurements should be recorded in the field logbook or field documentation in accordance with SOP-04 Field Documentation.
2. Exam the utility markings and above ground utility markers (e.g., fire hydrants, storm drains, manhole covers) to assess if all the utility service locators have marked the area. It may be necessary to call the One-Call Service with the ticket number if a utility locate service appears to not have marked the utility.
3. If the borehole or excavation locations have been staked by a surveyor, assess that the locations are within reason of their anticipated location, or accurate by comparing with a GPS.
4. Exam the boring location or excavation area in relation to utility markings, available as-built utility diagrams, private locate service printouts, site layout plans, possible underground lines that would drain to storm sewer drain, etc.). Note: As-built drawings may not always accurate.
5. Look for overhead utilities (i.e., electrical or telephone line) to ensure they will not obstruct the raising of the mast or heavy equipment arm, or that the mast or arm is a safe distance from the overhead utility.
6. Discuss the proposed boring locations or excavation area with the subcontractor (geophysical subcontractor or drilling subcontractor) using utility markings, photographs, drawings, etc.
7. A minimum of <u>five</u> (5) feet vertical and horizontal clearance will be maintained between subsurface utilities and the proposed boring or excavation location.
8. Field truth testing will be conducted at all boring locations. Field truth testing requires the advancement of small boreholes advanced by a manual methods (i.e., hand auger) to avoid the potential of impacting a subsurface utility. Field truth testing may require the advancement of several boreholes capable of extending beyond the diameter of the anticipated borehole width. Field truth testing will be conducted as outlined in the Table 2 below.

Table 2 Field Truth Testing

Boring Distance for Subsurface Utility	Field Truth Testing Requirements
>= 5 feet	Minimum depth of clearance to 4 feet below ground surface clearance, preferably 5 feet below ground surface.
< 5 feet	Minimum depth of clearance to 6 feet below ground surface **AND** A REQUIRED minimum distance of 120% of the borehole diameter. (For example, if the boring diameter is anticipated at 11 inches, the outer edge of the boring must be a minimum distance of 13.3 inches from the located or suspected utility.)

9. If a utility conflict is identified, the proposed location(s) should be adjusted to meet the criteria given above. If a utility conflict cannot be resolved, re-evaluate the location, and, if necessary, eliminate the boring location.
10. If changes to the project work plan occur, additional utility clearance (i.e., public and private locate services) will be contacted.

2.0 RECORDS

Field notes will be kept in a bound field logbook or approved field documentation following the format specified in SOP-04 Field Documentation. The following information should be recorded when conducting a utility locate:

- The Utility Locate Checklist
- Photographs, sketches, and measurements
- Required site maps and mark-up for subsurface utilities
- Facility as-built drawings
- Details from any joint utility locate meeting
- Details from interviews with site personnel or facility engineers
- Weather observations (for example, wind speed, sunny or cloudy sky)
- Any problems encountered
- Corrective actions.

3.0 CORRECTIVE ACTIONS

Even using the best preventative approach as described above can fail to locate a utility, or result in a utility being hit during field activities. As a result, corrective actions need to be planned in advance, because of the serious health and safety, legal, and/or financial liabilities associated with an accident or incident. Health and safety consideration and emergency procedures should be outlined in the project specific safety plan.

Prior to beginning field work, emergency phone numbers for all utilities should be obtained in the event a line is hit. In most cases, this may be a single number, such as the State One-Call Service. In addition, identification of a subcontractors or facility personnel that can immediately repair the broken utility may be required. Quick mobilization of such subcontracted companies to a site can prevent costly breaks in utility lines.

- Utility strikes (unplanned contact with utilities resulting in damage to the utility or its protective coating) shall be reported in accordance with the EHS Support Incident Reporting Procedure – EHSMS 8.1, utilizing the Damage Information Reporting Tool (DIRT) form.
- All damaged utilities shall be repaired by a qualified and/or licensed professional.

ATTACHMENT A UTILITY CLEARANCE CHECKLIST

Utility Clearance (UC) Checklist

GENERAL INFORMATION	
Project Name	**EHS Support Project Manager**
Project Address, City, State, Zip:	
Competent UC Person Completing Checklist	**Client Contact/Project Manager**

PROJECT PLANNING		
Written Scope of Work and Figure Completed	☐Yes	☐No
Scope of Work and Figure approved by PM?	☐Yes	☐No
Has a site walk been performed to identify potential underground and aboveground utilities and obstructions?	☐Yes	☐No
Have aboveground utilities or obstruction been identified within 20 feet of the location of the proposed work?	☐Yes	☐No
If Yes, can the work location be moved to avoid the hazard? If not, follow the appropriate federal regulations regarding safe working distances from electrical lines.	☐Yes	☐No
Have utility maps been requested of site personnel?	☐Yes	☐No
Do utility drawings exist for location?	☐Yes	☐No
If Yes, have they been acquired and reviewed? **Check if Not Applicable** ☐	☐Yes	☐No
Does the HASP or other relevant document specifically address the course of action following contact with a utility?	☐Yes	☐No
Additional Comments (Provide any relevant notes from site walk and drawing review)		

PUBLIC UTILITY MARKOUT	
Date of Public One-Call	**Ticket Number(s)**
One-Call Request Time	**Utility Service Name**
Utility Service Number	**Utility Service Contact Person**
Date of Public Markout Completed	**Date That Public Utility Markings Expire**
List the Contacted Utilities	

PRIVATE UTILITY MARKOUT		
Is the boring location on private property? **If YES, then private utility markout is REQUIRED** ***Signature of EHS Support PM waiving this requirement** _____	☐Yes	☐No

Method of underground utility clearance (UUC) utilized:		
Company providing Private UUC: **Date Private UUC completed:**		
Was the UUC contractor provided all existing utility figures prior to the markout?	☐Yes	☐No
Did the Private UUC contractor provide a detailed sketch/drawing/figure of the identified utilities?	☐Yes	☐No
Are any borings located within the Critical Zone (Area 5 feet vertically or horizontally of a located or suspected utility? **If NO, then manual clearance (e.g. hand auger) to 4 feet below ground surface is required.** **If YES, then manual clearance to a Minimum depth of 6 feet below ground surface and Minimum width of 120% of the boring diameter is REQUIRED.** ***Signature of EHS Manager waiving this requirement_____**	☐Yes	☐No
Please note that the above clearances are the Minimum. The further the distance from a utility the better.		
INTRUSIVE WORK		
Has a visual site inspection of all locations been completed and private and public utility markings been reviewed?	☐Yes	☐No
Is manual vertical clearance required?	☐Yes	☐No
Has the competent on-site UUC person shared any documented results of the Private UUC with the person completing the intrusive work?	☐Yes	☐No
Method of manual clearance utilized:		
Company providing manual clearance: **Date manual clearance completed:**		
EPLANATION FOR ANY WAIVED REQUIREMENT(S) – REQUIRED:		

Signature of Person Completing Checklist:_____

Date of Completion: _____

FIELD DOCUMENTATION

PURPOSE

The purpose of this SOP is to provide guidance to ensure that field documentation for any field activity is correct, complete, and adequate. Logbooks and field documentation forms are used for keeping a record of field activities and identifying, locating, labeling, and tracking samples. A field logbook should document any deviations from the applicable work plan, quality assurance project plans, and health and safety plans. A complete and accurate field logbook and field documentation aids in maintaining good quality control. All field records must be factual, objective, and legible.

Relevant EHS Support SOPs

- SOP-05 Sample Management and Shipping
- SOP-07 Investigation Derived Waste
- SOP-08 Field Equipment Operation and Calibration
- SOP-09 Equipment Decontamination
- SOP-21 Soil Sample Collection Methods
- SOP-22 Soil Sampling for Chemical Analysis
- SOP-23 Soil Sampling for Physical Analysis
- SOP-24 Hand Auger
- SOP-25 Drilling Methods using Direct Push Technology
- SOP-26 Drilling Methods using Hollow Stem Auger
- SOP-27 Drilling Methods using Sonic
- SOP-28 Drilling Methods using Rotary (Air, Mud, Water)
- SOP-29 Rock Coring
- SOP-30 Field Classification and Description of Soil
- SOP-31 Field Classification and Description of Rock
- SOP-32 Borehole and Well Abandonment
- SOP-40 Groundwater Monitoring Well Design and Installation
- SOP-42 Groundwater Monitoring Well Development
- SOP-43 Groundwater Sampling Using Low Flow Sampling
- SOP-44 Groundwater Sampling Using Volume Purge Techniques.

Attachments

- Attachment A Examples of Chain of Custody
  - Environmental/Chemical
  - Physical.

Required Materials

- Project work plan or instruction
- Field logbook and field documentation
- Black waterproof and/or indelible ink pens.

1.0 FIELD DOCUMENTATION

Field documentation serves as the primary record of collected data and activities used to support a given project. Subject to the requirements of the applicable work plan, documentation may include field logbooks, field documentation forms, or reports for the various field activities. Minimum expectations for field documentation are as follows:

- Field documentation must be accurate, legible, and written in indelible ink.
- Field documentation will be recorded and maintained on a daily basis as the work progresses, and should contain enough information to allow the activities to be reconstructed so that the work conducted and timeline are understood.
- The date, project name, and number of pages (e.g., 1/1, 2/3) will be written at the top of each page of the field document.
- Mistakes will be crossed out with one line, dated, and initialed. Any corrections/additions made to documentation will be dated and initialed.
- Materials that obliterate the original information (e.g., erasures, correction fluids, mark-out tapes) are prohibited.
- Skipped pages or blank sections at the end of a page in a field logbook should be crossed out with an "X" covering the entire page or blank section, dated, and initialed.
- The responsible field team member should sign and log the date at the bottom of each page in the field logbook and after the last entry for the day.
- Field logbooks and/or field documentation (e.g., boring logs, sampling forms) will contain all information of the field investigation. Use of approved field documentation forms for recording field data are at the discretion of the Project Manager.
- Original field documentation forms should have the date, project name, technician's name, and project activity at the top of the field document.
- The responsible field team member will sign and log the date at the bottom of each page of the field documentation form.
- Photographic documentation descriptions will be included in the field logbook during field investigations.
- All field documentation will be included with the project files. The location of the electronic project files will be confirmed with the Project Manager. The original hard copy field documentation will be scanned as an electronic copy and then placed in the project file folder, or sent to the Project Manager. The field logbook will be kept with the project file folder, Project Manager, or responsible field team leader.

1.1 Field Logbooks

A field logbook serves as the primary record for a field investigation. A field logbook will be maintained for every field investigation or operation undertaken during an investigation. The field logbook should contain detailed records of the field activities in as much detail as possible so personnel can accurately reconstruct the activities and events that have taken place during field assignments. Field logbooks are considered accountable documents in legal proceedings and may be subject to review. Therefore, the entries in the logbook must be accurate, detailed, and reflect the importance of the field events.

Field logbooks, generally in a 4⅝ by 7¼ inches or 8½ by 11 inches in format, should be bound with water resistant and acid-proof covers and have preprinted lines and wide columns. An indelible ink pen should be used to document the activities in the field logbook.

Various field tasks require observations pertaining to that task/activity. Documentation that should be provided in the field logbook for various field tasks is outlined below. The information may or may not be

inclusive of the task performed, but is intended to provide an overview of the type of information and level of detail required for accurate and accountable record keeping.

1.1.1 General Field Logbook Requirements

All field personnel or field sampling teams are responsible for completing and providing a field logbook. Information that should generally be recorded in the field log includes

- Project and site name
- Site location (e.g. city and state)
- Health and safety activities
  - Record of tailgate meetings, topics discussed, attendees, company name of the attendees
  - Site contaminants of concern and/or other relevant hazards and steps to avoid, mitigate or remove hazards
  - Required personal protective equipment and decontamination procedures
  - Utility locate (one-call locate service, sketch, photographs), if applicable
- Time (24-hour clock)
- Personnel and subcontractors present for work activity and time spent on job site
- Weather, or changes in weather during the day
- Field operations and personnel assigned to the activities
- A documentary of the timeline detailing daily activities and operations, and summary of daily operations
- Problems encountered and corrective actions
- Quality control activities: e.g., decontamination procedures, quality assurance/quality control (QA/QC) samples taken, calibration of field equipment
- Deviations from the project work plan
- Visitors to the work area/site (date, time, name, company and contact information)
- Records of communications: discussions of job-related activities with the client, subcontractor, field team members, project manager, and/or visitors
- Records or documentation of equipment, supplies, or materials received or shipped invoices; copies of waste manifests or bill of lading, shipping information
- Field observations for inspections, monitoring, sampling, etc.
- Description and photographic log

1.1.2 Calibration Logs

Calibration will be conducted in accordance with SOP-08 Field Equipment Operation and Calibration. Calibration documentation logs are included as attachments to SOP-08. The following information should be provided in the field logbook or approved field documentation as applicable to the work:

- Calibration date and time for all equipment used for the project
- Type of equipment (e.g., photoionization detector (PID), pH meter, dust monitor, noise dosimeter, groundwater monitoring equipment) Serial number and model of equipment calibrated
- Calibration standard (gas or standard solution),concentration, and expiration
- Equipment response to calibration standard
- Adjustments made and recalibration
- Person performing calibration
- Manufacturer/vendor calibration sheet (for most recent maintenance calibration).

1.1.3 Drilling Log

Drilling activities will be conducted in accordance with subsurface borehole advancement SOPs (SOP-24 to SOP-29), SOP-21 Soil Sample Collection Methods, various media-specific sampling SOPs, SOP-40 Well Design/Construction, SOP-09 Equipment Decontamination, and/or SOP-32 Borehole and Well Abandonment. The following information should be provided in the field logbook or applicable field documentation:

- Borehole, well, or sample location (sketch)
- Borehole, well, or sample location identification
- Drilling activities
  - Name of drilling company and driller
  - Field geologist, hydrogeologist, engineer, or appropriate scientist logging the soil/bedrock
  - Time and date of drilling, stoppage, completion, and/or backfilling
  - Drilling method and equipment used (including soil sampler type and diameter)
  - Borehole and drill casing diameter
  - Reference elevation for depth measurements
  - Monitoring readings (e.g., PID readings)
  - Depth interval and recovery
  - Geologic information
  - Total drilling depth.
- Encountered obstructions or refusal
- Well construction information (e.g., materials used, total depth, screen interval, surface completion)
- Method of abandonment
- Type and amount of material used to abandon boreholes
- Sampling performed (soil, groundwater, waste, etc.)
  - Date and time of sample collection
  - Sample type (media) and method (e.g., grab, composite)
  - Sample interval
  - Number of samples collected, sample IDs/nomenclature used
  - Quality control samples collected (e.g., duplicates, equipment blanks)Analyses to be performed on collected samples.
- Equipment decontamination procedures
- Investigation derived waste (IDW) containerization (number of drums, roll off-bins, etc.)
- Disposal of IDW (shipping/transport records or temporary storage details)
- Field observations
- Problems encountered and corrective action
- Signature and date of party generating log.

1.1.4 Geologic Log

The preparation of geologic logs is the responsibility of the field geologist(s). A detailed description of unconsolidated soil logging is provided in SOP-30 Field Classification and Description of Soil and SOP-31 Field Classification and Description of Rock. A drilling log template is provided as an attachment to SOP-30 and SOP-31. The field logbook or approved field documentation forms for geologic logging should include:

- Type and volume of drilling fluids (e.g., mud, water, etc.)
- Depth, volume, and rate of drilling fluid loss, if applicable
- Blow counts, if applicable

- Geologic/Lithologic description of unconsolidated materials–Color, Unified Soil Classifications System (USCS) description, penetration resistance (consistency or density), moisture content, grain size information, minor lithologic information, miscellaneous information (e.g., odor, fractures, visible contamination, etc.)
- Geologic/Rock description of consolidated materials—Color, rock type, relative hardness, density, texture, weathering, bedding, structures (e.g., fractures, joints, bedding, etc.), minor lithologic information, miscellaneous information (e.g., presence of odor, visible contamination, etc.)
- Depth of stratigraphic/lithologic changes
- Depth to groundwater (first encountered, at completion, stabilized, absence of groundwater)
- Product description, if present (depth, thickness, visual and odor characteristics)
- Depth, type, and volume of grouting, grout mixes, sealing materials
- Field observations
- Problems encountered and corrective action
- Signature and date at the bottom of each page.

1.1.5 Well Construction Log

The preparation of well construction diagrams is the responsibility of the field leader, geologist, technician, or engineer. Well construction is further discussed in the SOP-40 Groundwater Monitoring Well Design and Installation. A well construction form is provided as an attachment to SOP-40. The field logbook or approved field documentation form for well construction would include:

- Drilling and well installation dates
- Type, length, and diameter of well screening and casing
- Well screen perforation size
- Well screen and casing depths
- Depth, type, and volume of grouting, grouting mixes, and sealing materials
- Other construction details (e.g., depth and type of sumps, centralizers, multichannel tubing, permanent pumps, etc.)
- Surface construction details (e.g., flush mount, protective covers, concrete pads, weep hole)
- Surface elevation and reference elevation
- Problems encountered and corrective action
- Signature and date at the bottom of each page.

1.1.6 Well Development and Groundwater Sampling Log

These topics are further discussed in SOP-42 Well Development, SOP-43 Groundwater Sampling Using Low Flow, and/or SOP-44 Groundwater Sampling Using Volume Purge Techniques. Respective field documentation forms are provided as attachments in each SOP. Basic information that is recorded in the field logbook or on approved field documentation forms for well development and groundwater sampling include:

- Calibration records (refer to Calibration Log documentation above)
- Date and time of well development or groundwater sampling
- Borehole, well, or sample location identification
- Water level and total depth of well
- Depth to product and product thickness, if present
- Reference elevation, if required
- Additional well information (e.g., casing diameter, filter pack thickness)
- Volume of water to be purged, if applicable
- Type of purging and sampling equipment

- Consistent time interval measurements of groundwater field parameters (e.g., pH, turbidity, conductivity, temperature, depth to water, etc.)
- Groundwater sampling details
  - Sample identification
  - Date and time of sample collection
  - Sample interval, if required
  - Quality control samples (e.g., duplicates, equipment blanks), if collected
  - Number of samples collected
  - Analyses to be performed on collected samples.
- Equipment decontamination procedures
- IDW containerization (volume, placement)
- Disposal of IDW (shipping/transport records or temporary storage details)
- Field observations
- Problems encountered and corrective action
- Signature and date at the bottom of each page.

1.2 Documentation of Sampling Activities

Field documentation also includes sample labels, sample seals, chain of custody (COC) records, and the shipping airbill. Management of samples from collection to shipment to laboratory is further discussed in SOP-05 Sample Management and Shipping.

1.2.1 Sample Labels

Sample identification should be completed in accordance with the project work plan or sampling plan. A sample label will be completed using waterproof indelible marker. A sample label will be affixed to all sample containers and contain the:

- Sample identification
- Project location, project name, and/or project number
- Type of sample (grab or composite)
- Type of preservative, if applicable
- Date and time of collection
- Analytical method
- Initials of sampling personnel.

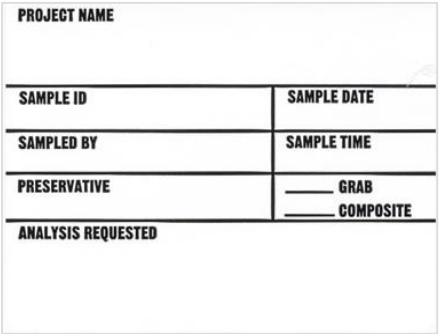

PROJECT NAME	
SAMPLE ID	SAMPLE DATE
SAMPLED BY	SAMPLE TIME
PRESERVATIVE	_____ GRAB _____ COMPOSITE
ANALYSIS REQUESTED	

Figure 1 Example of a Sample Label

1.2.2 Custody Seals

Custody seals consist of an initialed/signed and dated security tape covered with clear packing tape. The custody seal is to provide a line of evidence that sample coolers or containers have not been tampered since the cooler was packed and sealed. Custody seals will be placed on coolers prior to the sampling team's release to a second or third party (e.g., shipment to the laboratory).

Figure 2 Example of a Custody Seal

1.2.3 Chain-of-Custody Records

A COC record is the legal record that tracks the possession and handling of samples from the time of field collection through laboratory analysis and provides information on the sample condition and integrity as received by the laboratory. A sample is considered in custody if it meets any of the following criteria:

- Is in an individual's possession
- Is in view after being in an individual's physical possession
- Is locked or sealed so that no one can tamper with it after it has been in an individual's physical custody
- Is in a secured area that is restricted to authorized personnel.

The COC is documented through a record that lists each sample and the individuals responsible for sample collection, shipment, and receipt. Information recorded on the COC includes:

- Project name and project number
- Time and date of sample collection
- Sample identification number
- Sample matrix
- Sampler's signature
- Required analysis
- Number and type of containers and preservatives
- Other additional notations (e.g., sheen, odor, turnaround time, regulatory standards for analysis).

A copy of the COC record will be retained by the sampler prior to release to a second or third party. Prior to release the COC record will be properly signed, dated, and checked for completeness. Examples of COCs for chemical testing and physical testing are included as **Attachment A**.

1.2.4 Shipping Airbills

Samples shipped from the field to the laboratory or vendor via a commercial carrier (e.g., Federal Express) may require an airbill or receipt. Upon completion of the field sampling event, the sampling team or field leader will be responsible for submitting the sender's copy of the shipping airbills to be copied. While airbills may differ, the general shipping information includes:

- The date of shipment:

- The sender's mailing address and phone number
- The recipient's mailing address and phone number
- The EHS support shipping number
- The project number
- Shipping requirements.

A copy of the airbill or tracking number will be kept to verify sample shipment arrives as scheduled to the appropriate vendor or laboratory.

1.3 Photographs

Photographs provide the most accurate demonstration of the field worker's observations. Photographs can be significant to the project team during future inspections, data evaluation, report preparation, informal meetings, and hearings. Photographs should be taken with a camera-lens system having a perspective similar to that afforded by the naked eye. Telephoto or wide-angle shots cannot be used in enforcement proceedings. Video coverage of a sampling episode can be equally (or even more) valuable than photographs because the coverage can be used to prove that the investigation or sampling process was conducted properly as well as where they were taken.

A photograph must be documented by the photographer in the field logbook if it is to be a valid representation of an existing situation. The following information will be recorded in the field logbook for photographs taken:

- Site name and location
- Photographer
- Sequential photographic number
- Date and time photograph taken
- Directional reference or GPS coordinate of the photograph
- Subject of photographs and description.

Table 1 Example Format for Photographic Log

Site Name and Location:
Photographer:

Photo #	Date	Time	Photo Direction	Location/GPS Location	Subject	Subject Description

General Photographic Suggestions

- Some clients do not permit photographs. Confirm with the project manager or site manager that photographs are allowed.
- Take photographs before, during, and after to convey a timeline. Photographs should be taken for investigations, emergencies, incidents, and as appropriate.
- Be aware of the goal(s) of the project and capturing images that clearly demonstrate progress towards achieving the goal(s).
- The photographer should be prepared to take a variety of shots, from long range to close-up. Many shots will be repetitive in nature or format, especially close-up site feature photographs.
- Photographs taken to document sampling locations should include two or more reference points or include landscape features that are unlikely to change over several years (buildings, other structures, etc.) as to facilitate relocating the point at a later date.

- Consider the angle of light, cloud cover, background, shadows, and contrasts. Medium and long view photos are best shot with the sun at the photographer's back.
- Capture seasonal features such as foliage, stream flow, cloud cover, and site access as these features may help demonstrate passage of time.
- Use a ruler, person, farm animal, automobile, etc. when possible to convey the scale of the image. The angle (e.g., overhead, elevated shot from a bridge, peak, etc.) may provide better perspective of the intended subject.
- Photographs of soil or rock cores should have a location and depth interval label, as well as the boring/well ID and an "up" indicator.

ATTACHMENT A EXAMPLES OF CHAIN OF CUSTODY

>>> Select a Laboratory <<<

#N/A
#N/A
#N/A
#N/A

Chain of Custody Record

Regulatory Program: ☐ DW ☐ NPDES ☐ RCRA ☐ Other:

Client Contact	**Project Manager:**	**Site Contact:**	**Date:**	COC No:
Your Company Name here	**Tel/Fax:**	**Lab Contact:**	**Carrier:**	_____ of _____ COCs
Address	**Analysis Turnaround Time**			Sampler:
City/State/Zip	☐ CALENDAR DAYS ☐ WORKING DAYS			**For Lab Use Only:**
(xxx) xxx-xxxx Phone	TAT if different from Below _____			Walk-in Client:
(xxx) xxx-xxxx FAX	☐ 2 weeks			Lab Sampling:
Project Name:	☐ 1 week			
Site:	☐ 2 days			Job / SDG No.:
P O #	☐ 1 day			

Sample Identification	**Sample Date**	**Sample Time**	**Sample Type** (C=Comp, G=Grab)	**Matrix**	**# of Cont.**	**Filtered Sample (Y / N)**	**Perform MS / MSD (Y / N)**																	Sample Specific Notes:

Preservation Used: 1= Ice, 2= HCl; 3= H2SO4; 4=HNO3; 5=NaOH; 6= Other _____

Possible Hazard Identification:
Are any samples from a listed EPA Hazardous Waste? Please List any EPA Waste Codes for the sample in the Comments Section if the lab is to dispose of the sample.

☐ Non-Hazard ☐ Flammable ☐ Skin Irritant ☐ Poison B ☐ Unknown

Sample Disposal (A fee may be assessed if samples are retained longer than 1 month)

☐ Return to Client ☐ Disposal by Lab ☐ Archive for_____ Months

Special Instructions/QC Requirements & Comments:

Custody Seals Intact: ☐ Yes ☐ No | Custody Seal No.: | Cooler Temp. (°C): Obs'd:_____ Corr'd:_____ Therm ID No.:_____

Relinquished by:	Company:	Date/Time:	Received by:	Company:	Date/Time:
Relinquished by:	Company:	Date/Time:	Received by:	Company:	Date/Time:
Relinquished by:	Company:	Date/Time:	Received in Laboratory by:	Company:	Date/Time:

PTS Laboratories, Inc.

CHAIN OF CUSTODY RECORD

PAGE OF

COMPANY

ADDRESS CITY ZIP CODE

PROJECT MANAGER

PROJECT NAME PHONE NUMBER

PROJECT NUMBER FAX NUMBER

SITE LOCATION

SAMPLER SIGNATURE

PO#

TURNAROUND TIME

24 HOURS ☐ 5 DAYS ☐
48 HOURS ☐ NORMAL ☐
72 HOURS ☐

OTHER: _____

SAMPLE INTEGRITY (CHECK):

INTACT _____ ON ICE _____

PTS QUOTE NO.

PTS FILE:

ANALYSIS REQUEST

SAMPLE ID NUMBER	DATE	TIME	DEPTH, FT	NUMBER OF SAMPLES	SOIL PROPERTIES PACKAGE	HYDRAULIC CONDUCTIVITY PACKAGE	PORE FLUID SATURATIONS PACKAGE	TCEQ/TNRCC PROPERTIES PACKAGE	CAPILLARITY PACKAGE	FLUID PROPERTIES PACKAGE	PHOTOLOG: CORE PHOTOGRAPHY	MOISTURE CONTENT, ASTM D2216	POROSITY: TOTAL, API RP40	POROSITY: EFFECTIVE, ASTM D425M	SPECIFIC GRAVITY, ASTM D854	BULK DENSITY (DRY), API RP40 or ASTM D2937	AIR PERMEABILITY, API RP40	HYDRAULIC CONDUCTIVITY, EPA9100, API RP40, D5084	GRAIN SIZE DISTRIBUTION, ASTM D422/4464M	TOC: WALKLEY-BLACK	ATTERBERG LIMITS, ASTM D4318					COMMENTS

1. RELINQUISHED BY	2. RECEIVED BY	3. RELINQUISHED BY	4. RECEIVED BY
COMPANY	COMPANY	COMPANY	COMPANY
DATE TIME	DATE TIME	DATE TIME	DATE TIME

PTS Laboratories, Inc. • 8100 Secura Way • Santa Fe Springs, CA 90670 • Phone (562) 347-2500 • Fax (562) 907-3610
PTS Laboratories, Inc. • 4342 W. 12th St. • Houston, TX 77055 • Phone (713) 316-1800 • Fax (713) 316-1882

SAMPLE MANAGEMENT AND SHIPPING

PURPOSE

The purpose of this SOP is to provide a general reference for ensuring the integrity of samples from collection to their final disposition (e.g., laboratory) is met. This SOP considers general shipping of environmental (chemical) or geotechnical (physical) samples.

Shipping under this SOP includes direct delivery, courier, and/or air transport. Regulations for sample labeling, packing, and shipping of dangerous goods by air transport are promulgated by U.S. Department of Transportation (DOT) under Code of Federal Regulations, Title 49 [49 Code of Federal Regulations (CFR)], Subchapter C, Hazardous Materials Regulations, and the International Air Transport Authority (IATA).

Relevant EHS Support SOPs

- SOP-04 Field Documentation.

Attachments

- Attachment A Example of Laboratory Holding Times

Required Materials

- Field logbook and field documentation
- Site maps, site layouts, site plans
- Health and Safety Plan
- Appropriate personal protective equipment (PPE)
- Black waterproof and/or indelible ink pens
- Sample labels
- Chain of Custody
- Custody seals
- Coolers
- Clear packing and duct tape
- Plastic baggies
- Trash bags, or drum liners
- Bubble wrap
- Ice
- Federal Express form (with EHS Support account).

1.0 SHIPPING OF HAZARDOUS SUBSTANCES OR DANGEROUS GOODS

Shipment of hazardous substances and dangerous goods including non-aqueous phase liquids (quantity regulated), compressed gas, biological hazards, radioactive substances require special shipping procedures and training. Shipment of hazardous substances and dangerous goods requires additional training and regulatory-approved packaging if sent by common carrier. The shipment of hazardous substances and dangerous goods, their packaging, labeling, and shipping are regulated by the United States Department of Transportation (DOT) Hazardous Material Regulation (HMR), 49 CFR, Parts 106 through 180 and the IATA Dangerous Goods Regulation (DGR).

Shipment of a potentially hazardous substance or dangerous goods will be discussed with the Project Manager and the EHS Support Health and Safety Manger. Dangerous goods must not be offered for air transport by any personnel except for personnel trained and certified by IATA in dangerous goods shipment.

1.1 Definitions

Dangerous goods: Dangerous goods are articles or substances that can pose a significant risk to health, safety, or property when transported by air; they are classified as defined in Section 3 of the DGR (IATA 2007).

Environmental samples: Environmental samples include but are not limited to drinking water, groundwater, surface water, soil, sediment, mixed waste samples, treated municipal and industrial wastewater effluent, biological specimens, or any samples not expected to be contaminated with high levels of hazardous materials.

Hazardous Materials Regulations: The HMR are DOT regulations for the shipment of hazardous materials by air, water, and land; they are located in 49 CFR 106 through 180.

Hazardous samples: Hazardous samples include dangerous goods and hazardous substances. Hazardous samples shipped by air should be packaged and labeled in accordance with procedures specified by the DGR. Ground shipments should be packaged and labeled in accordance with the HMR.

Hazardous substance: A hazardous substance is any material, including its mixtures and solutions, that is listed in Appendix A of 49 CFR 172.101 and its quantity, in one package, equals or exceeds the reportable quantity listed in the appendix.

IATA Dangerous Goods Regulations: The DGR are regulations that govern the international transport of dangerous goods by air. The DGR are based on the International Civil Aviation Organization (ICAO) Technical Instructions. The DGR contain all of the requirements of the ICAO Technical Instructions and are more restrictive in some instances.

Nonhazardous samples: Nonhazardous samples are those samples that do not meet the definition of a hazardous sample and do not need to be packaged and shipped in accordance with the DGR or HMR.

1.2 Non-Hazardous Sample Management and Shipping

1.2.1 General Requirements

- Samples will be placed in contaminant-free containers stored in cool, dry, clean areas to prevent exposure to fuels, solvents, and other non-site related impacts.
- Sample containers will not be used if held for an extended period on the job site (some states dictate this time limit) or exposed to extreme heat conditions.
- Sample container will be kept out of the sun.
- Samples will be shipped in an expeditious time to ensure samples are received by the laboratory within the holding time of the sample method. An example of sample container, preservative and holding times is included as **Attachment A.**

1.2.2 Sample Labels

Sample labels will be completed using black waterproof indelible marker. One sample label will be affixed to each sample container. The sample identification will be written as specified in the project work plan. Pre-printed sample labels should be used when available. Documentation for sample labeling can be referenced in SOP-04 Field Documentation.

1.2.3 Sample Packing

Protocols for sample temperature maintenance and sample packing are applicable to collection of samples year-round or as otherwise specified. The intent is to ensure samples arrive at the laboratory in good condition—both physically intact and appropriately preserved.

- Place each sample container in a re-sealable plastic baggie or similar
- Squeeze as much air as possible from the plastic baggie and seal
- Glass containers should be wrapped in bubble wrap.

1.2.4 Cooler Packing for Samples on Ice

Determine the maximum allowable weight of each cooler (for example, the FedEx limit is 150 pounds. Most shippers will not accept a shipment for transportation when it appears if the shipment is:

- Improperly packed or packaged
- Of a kind or type likely to incur damage from high or low temperature under normal air transportation conditions
- Of an inherent nature or contains defects that may indicate transportation could not be furnished without loss or damage to the shipment or damage to the shippers facilities or equipment.

Cooler Packing Instructions for Samples on Ice:

1. Tape the drain plug on the inside and outside of the cooler.
2. Place cushioning material (e.g., bubblewrap) in the bottom and around the sides of the cooler.
3. Place a large plastic bag (e.g., trash bag) in the bottom of cooler to contain samples. Allow the top edges of the plastic bag to hang over the outside of the cooler while filling.
4. Place the wrapped bottles upright in the cooler allowing enough room for ice bags and cushioning material to be placed between and around the containers.
5. If required, place a temperature blank in the cooler with the samples.
6. Insulate the samples with additional cushioning to deter breakage.
7. If using wet ice, place the ice in a plastic bags and seal (considered a double bagging to protect against possible leakage).

8. Distribute ice substitute bags (such as gel ice) or plastic bags containing wet ice between samples and over the containers to preserve them at approximately 4 degrees Celsius (°C).
9. Fill the remaining space in the cooler with additional ice and/or cushioning material to prevent the contents from shifting during shipment.
10. Pull the top edges of the large plastic bag up and together, force out any extra air, and twist the top of the plastic bag several times. Secure the twisted portion of the bag with a tie strap or tape.
11. If the cooler is being couriered or hand delivered to the laboratory, a signature will be required from the party releasing the cooler(s) and the party accepting responsibility for the cooler and its contents. If the cooler is being shipped via air carrier, a signature will be required from the party releasing the cooler (following the air carriers delivery to the laboratory, the laboratory will append their signature).
12. Place the chain of custody (COC) in a plastic baggie outside, and on top of the large plastic bag containing the samples and ice. The baggie containing the COC may be taped to the underside of the cooler top.
13. Retain an original carbon copy or photocopy of the completed COC.
14. Complete two custody seals.
15. Seal the cooler by placing the one custody seal on the front and the other custody seal on the rear of the cooler across the edge where the cooler and cooler lid meet.
16. Use clear packing tape and encircle the tape around the cooler. The packing tape should cover the custody seals and should secure the lid.

1.2.5 Packing for Samples (not on ice)

1. Place cushioning material (e.g., bubblewrap) around the sample container.
2. Fill the remaining spaces of the container with additional packing material to secure the sample from movement.
3. If the container is being couriered or hand delivered to the laboratory, a signature will be required from the party releasing the cooler(s) and the party accepting responsibility for the cooler and its contents. If the cooler is being shipped via air carrier; a signature will be required from the party releasing the cooler (following the air carriers delivery to the laboratory, the laboratory will append their signature).
4. Place the COC in a plastic bag and place in container.
5. Retain an original carbon copy or photocopy of the completed COC.
6. Complete a custody seal and attach along an opening of the container (e.g., the edge of a box).
7. Using clear packing tape, tape the container shut.

1.2.6 Shipping Airbills

1. Complete the shipping or airbill form.
2. It is recommended to ship coolers certified to ensure samples are received within a sample's required holding time.
3. Ship the samples. If necessary, notify the laboratory the samples have been shipped.
4. Retain a copy of the shipment airbill to use for tracking of the package.

1.2.7 Records

The documentation for sample packaging and shipping will consist of chain-of-custody records and shipper's records. Documentation should be kept and placed in with the project files.

ATTACHMENT A EXAMPLE OF LABORATORY HOLDING TIMES

RECOMMENDED HOLDING TIMES FOR ENVIRONMENTAL SAMPLES

Parameters	Method*	Container	Recommended Quantity (mL)	Preservative	Holding Time
Acidity	305.1, 2310B	P,G	100	4^0C	14 days
Alkalinity	310.1, 310.2, 2320B	P,G	100	4^0C	14 days
Ammonia-N	4500NH3BE, 350.3	P,G	500	4^0C, H_2SO_4 to pH <2	28 days
Biochemical Oxygen Demand (BOD)	405.1, 5210B	P,G	1000	4^0C	48 hours
Bromide	300.0, 9056	P,G	200	None	28 days
Chemical Oxygen Demand (COD)	HACH 8000	P,G	100	4^0C, H_2SO_4 to pH <2	28 days
Chloride	325.3, 9251, 9056	P,G	200	None	28 days
Chlorine, Residual	330.3, 4500 CLG	P,G	200	None	Immediately
Coliform, Fecal	9222D	P,G (sterile)	100	4^0C, $Na_2S_2O_3$	6 hours
Color	2120C, 110.3	P,G	100	4^0C	48 hours
Cyanide	335.1, 335.2, 335.3 9012A	P,G	1000	4^0C, ascorbic acid, NaOH to pH > 12	14 days
Ferrous Iron	3500FED	P,G	100	2mHCl/100mL	Immediately
Flashpoint	1010	P,G	100	None	Not specified
Fluoride	300.0, 9056, 340.2	P	500	None	28 days
Hardness	130.2 2340B	P,G	100	HNO_3 to pH < 2	6 months
Nitrogen, Kjeldahl (TKN)	4500NH, 351.4	P,G	500	4^0C, H_2SO_4 to pH <2	28 days
Nitrate-N	353.2	P,G	100	4^0C	48 hours
Nitrate-Nitrite as N	353.2	P,G	200	4^0C, H_2SO_4 to pH <2	28 days
Oil and Grease	1664A	G	1000	4^0C, H_2SO_4 or HCl to pH < 2	28 days
Phenols	420.1, 420.2, 9066	P,G	1000	4^0C, H_2SO_4 to pH <2	28 days
Phosphorus, Total	365.1	P,G	200	4^0C, H_2SO_4 to pH <2	28 days
Phosphorus, Ortho	365.2, 4500PE	P,G	200	4^0C	48 hours
pH	150.1, 9040B, 9045C	P,G	100	None	Immediately
Radiochemisrty Alpha, Beta, Radium Tritium Radon, I-131	900 & 9000 series	 P,G P,G P,G	 2000 100 1000	 HNO_3 to pH < 2 None HNO_3 to pH < 2	 6 months 6 months 14 days
Reactivity	SW846 7.3.3.2, 7.3.4.2	G	100g	4^0C	Not Specified
Silica	370.1, 4500Si D	P, PFTE, Quartz	100	4^0C	28 days
Solids, Dissolved (TDS)	160.1, 2540C	P,G	100	4^0C	7 days
Solids, Suspended (TSS)	160.2, 2540D	P,G	500	4^0C	7 days
Solids, Volatile (TVS)	160.4, 2540E	P,G	100	4^0C	7 days
Solids, Total (TS)	160.3, 2.540B	P,G	100	4^0C	7 days
Specific Conductance	120.1, 9050	P,G	100	4^0C	28 days
Specific Gravity	2710F	P,G	100	4^0C	28 days
Sulfate	375.4, 9056, 9038	P,G	200	4^0C	28 days
Sulfide	376.1, 376.2, 9034	P,G	500	4^0C, Zn acetate, NaOH to pH > 9	7 days
Sulfite	4500S03B	P,G	200	None	Immediately
Surfactants (MBAS)	425.1, 5540C	P,G	250	4^0C	48 hours
Total Organic Carbon (TOC)	415.1, 9060	P,G	100	4^0C, HCl to pH < 2	28 days
Total Organic Halogens (TOX)	9020B	G-TLC (amber)	100	4^0C, H_2SO_4 to pH <2	28 days
Total Petroleum Hydrocarbon (TPH)	418.1	G-TLC	1000	4^0C, H_2SO_4 or HCl to pH < 2	28 days
Turbidity	180.1, 2130B	P,G	100	4^0C	48 hours
Viscosity	D2196	P,G	500	None	Not Specified

*The methods listed are from typical EPA references.
#Solid and waste samples: Quantity 1-100g, preservative 4 ° C
**Holding time for solids and samples is not defined
Organic Nitrogen = TKN – Ammonia-N

RECOMMENDED HOLDING TIMES FOR ENVIRONMENTAL SAMPLES

Metals

Parameters	Method*	Container	Recommended Quantity (mL)	Preservative	Holding Time
Metals (except Hexavalent Chromium and Mercury):					
Aqueous					
Total	6010B, 200.0, 7000 series	P,G	500	HNO_3 to pH < 2	6 months
Dissolved	6010B, 200.0, 7000 series	P,G	500	Filter on site HNO_3 to pH < 2	6 months
Solid					
Total	6010B, 200.0, 7000 series	P,G	100g	4^0C	6 months
Hexavalent Chromium					
Aqueous	7196A	P,G	500	4^0C	24 hours
Solid	3060A/7196A	P,G	100g	4^0C	30/7 days
Mercury					
Aqueous					
Total	245.2/7470	P,G	500	HNO_3 to pH < 2	28 days
Dissolved	245.2/7470	P,G	500	Filter on site HNO_3 to pH < 2	28 days
Solid					
Total	7471	P,G	100g	4^0C	28 days

Metals – Boron must be collected in a polyethylene container.

*The methods listed are from typical EPA references.
CrIII=Total Cr-Hexavalent Cr

Organic Parameters

Volatile Organics

Sample Matrix	Method*	Container	Minimum Quantity	Preservative	Holding Time
Concentrated Waste Samples	8021B, 8260B, 8015M	G-TLC or G-TLS	2 x 40mL vials or 4-oz wide mouth	4^0C	14 days
Aqueous Samples	8021B, 8260B, 8015M, 624, VPH	G-TLS	2 x 40mL vials	4^0C, HCl to pH < 2 , $Na_2S_2O_3$ if residual chlorine present	14 days, 7 days if not acid preserved
Solid Samples	8021B,8260B, 8015M, VPH	G-TLS or G-TLC	4-oz wide mouth and/or Terracore Kit	4^0C	14 days **

*The methods listed are from typical EPA references.

Semivolatile Organics, Pesticides/PCBs, Herbicides, PAHs, Petroleum

Hydrocarbons

Sample Matrix	Method*	Container	Minimum Quantity	Preservative	Holding Time
Concentrated Waste Samples	8270C, 8081, 8082, 8015M, 8151A, 8141A, FL-PRO	G-TLC (Amber)	1 Liter	None	14 days until extraction, 40 days after extraction
Aqueous Samples	8270C, 8081, 8082, 8015M, 8151A, 8141A, 8310,608, 625, FL-PRO,EPH ***	G-TLC (Amber)	2 x 1 Liter	4^0C	7 days until extraction, 40 days after extraction
Solid Samples	8270C, 8081, 8082,	G-TLC	8 oz.	4^0C	14 days until

RECOMMENDED HOLDING TIMES FOR ENVIRONMENTAL SAMPLES

	8015M, 8151A, 8141A, 8310,EPH FL-PRO ***				extraction, 40 days after extraction
Parameters	**Method***	**Container**	**Recommended Quantity (mL)**	**Preservative**	**Holding Time**
Dioxins and Furans**	613, 8280A, 8290, 1613	G-TLC(Amber)	2 x 1 Liter	4^0C	30 days until extraction, 45 days after extraction

*The methods listed are from typical EPA references.
**Concentrated wastes and soil samples are collected in 2 oz. to 1 Liter amber glass jars with TLC.
***1005/1006, Petroleum Hydrocarbons –14 days after extraction

TCLP/SPLP Parameters

Parameters	Holding Time from Collection to TCLP Extraction (days)	Holding Time from TCLP Extaction tor Preparative Extraction (days)	Holding Time from TCLP/Preparative Extraction to Analysis (days)	Total Time
Volatiles	14	NA	14	28
Semivolatiles	14	7	40	61
Mercury	28	NA	28	56
Metals	180	NA	180	360

Reference: 40CFR Part 136 Tables IA, IB, IC, ID & IE and Table II., SW846 Table 4-1 and Table 3-1, SW846 Method 1311 8.5,
*The methods listed are from typical EPA references
Acronymn Definitions: (Teflon is a registered trademark of E.I. DuPont)
CLP: EPA Contract Laboratory Program
G-TLC: Glass with Teflonâ-lined cap
NA: Not Applicable
G: Glass
G-TLS: Glass with Teflonâ-lined septrum
P: Polyethylene

PRE-FIELD MOBILIZATION PROCEDURES

PURPOSE

This SOP is advisory; however, the following guidelines are designed as best management practices for use in implementing a field program and when selecting a drilling subcontractor and laboratory.

Attachments

- Attachment A Field Support Checklist

Required Materials

- Project Work Plan

1.0 TRIP PLANNING PROCEDURES

1. Ensure that everyone involved with the event understands the purpose of the trip.
   a) Review the project work plan and relevant SOPs.
   b) Review the quality assurance project plan, permit requirements, or additional requirements, if available.
   c) Assess worker safety and prepare the Health and Safety Plan. Review the Health and Safety Plan and any site-specific safety plans.
2. Determine the number of people that will be required to complete the investigation or sampling activities within the allotted time frame. For safety and efficiency, a field team should consist of at least two people.
3. Identify the sampling team member(s) and schedule a meeting a pre-field discussion.
4. Develop a detailed itinerary and schedule.
5. Plan to sample from the least contaminated to the most contaminated sampling point.
6. Review personnel training and make assignments based on experience. Ensure that at least one trained, experienced individual is part of the team.
7. Review the safety plan and be sure contingencies (e.g., hospital/clinic information, emergency contacts, weather, broken equipment, site access, etc.) are included in the Health and Safety Plan.
8. Obtain the necessary entry permits, keys, etc.
9. Identify name(s) and phone number(s) of landowner, tenant or other responsible party.
10. Assemble any needed maps, directions, and site descriptions.
11. Identify the number of sampling points and order the laboratory supplies.
12. Identify the equipment and supplies needed to complete the field investigation.
13. Reserve appropriate vehicles and lodging, if necessary.
14. Assemble all field records (notebooks, forms, transmittal forms, etc.).
15. Locate appropriate directions from site to hotel, airport, FedEx, etc.

A Field Support Check List for general field investigations is included as **Attachment A**.

1.1 Drilling Subcontractor Notification Procedures

A subcontractor must be approved by EHS Support prior to subcontracting. While this task is beyond the scope of this SOP, it is an EHS Support requirement.

Notify the drilling subcontractor about the project needs and expectations several weeks in advance (if possible). Communication with the drilling subcontractor about the project needs should include with a written request:

- Anticipated or planned start date of the project
- Project address and location
- Responsibility to call the State One Call Utility Locate service
- Type of equipment and services the driller is to provide (e.g., hand auger, rig type, borehole diameter requirement, decontamination equipment, pumps)
- Conditions of the terrain (e.g., hilly topography, muddy surface, landfill)
- Number of boreholes or wells to be installed
- Approximate depth of boreholes
- Health and Safety requirements
- Project procedures for:
  - Borehole advancement
  - Borehole abandonment methods

  - Well installation (including well type, screen length, screen size, filter pack, seal and/or grouting needs)
  - Well development, if applicable
  - Investigative derived waste.
- Access to a water source, if needed
- Site-specific requirements (e.g., plant training or safety requirements)
- Obtain personnel (EHS Support and Subcontractor) names and phone numbers for communicating just prior to project start.

1.2 Laboratory Notification Procedures

The laboratory must have a Standard Contract in place with EHS Support prior to subcontracting. While this task is beyond the scope of this SOP, it is an EHS Support requirement.

Notify the laboratory about the analytical and equipment needs at least one week in advance of the actual sampling trip. Even if the trip is routine (monthly, weekly, quarterly compliance sampling), provide the laboratory with a written request, if possible, that includes:

- The laboratory contact and address information
- Determine how bottle set or samples will be shipped or couriered
- Number and types of samples to be collected, including duplicates or matrix spike/matrix spike duplicates (Ask for an extra set per matrix, if needed)
- Testing methods to be performed and reporting limits requirements
- Expectations for quality control acceptance criteria (if not already listed in a contract)
- Estimated numbers of each type of container
- Required preservatives, if required, Material Safety Data Sheet on the preservatives should be included
- Shipping containers
- Chain of Custody Forms
- Custody seals and labels
- Filters, if needed
- Laboratory-filtered deionized water, if needed
- Estimated time of delivery
- Expected turn-around time
- Quality assurance sets (e.g., trip blanks, temperature blanks)
- Any calibration services, if equipment is ordered through the laboratory
- Special needs such as “requires legal chain of custody” or “requires 24-hour turn-around time.”

1.3 Equipment and Supply Preparation

- Assemble a field equipment list to perform the field investigation successfully
- Inspect equipment or instruments for damage, cracks, breaks, and other signs of wear. If necessary, repair any equipment and document the repairs, if equipment is owned
- Provide equipment rental company contact and address information
- Consider the need for backup equipment
- Assemble the appropriate supplies including
  - Documentation and field log book
  - Appropriate personal protective equipment
  - Field Equipment
  - Calibration Standards
  - Laboratory Supplies

- Decontamination Supplies
- Tools
- Other Field Supplies.

ATTACHMENT A FIELD SUPPORT CHECKLIST

EHS Support consider it done

FIELD SUPPORT CHECKLIST

EQUIPMENT		EQUIPMENT CHECK	
Documentation		**Safety Equipment**	
☐	Monitoring Plan/Safety Plan	☐	First Aid Kit
☐	Appropriate area maps	☐	Mobile phone/communication
☐	Well Information	☐	Sunscreen/Wide-brimmed hat
☐	Field notebook, calibration sheet, record sheets, purge sheets	☐	Standard PPE (hard hat, eye and ear wear, clothing, boots, nitrile gloves)
☐	Chain of Custody sheets	☐	Drinking water/Sports Drink
Air Monitoring Equipment		**Field Filtration**	
☐	PID, FID, as appropriate	☐	Field filtration apparatus, syringe.
☐	Multi-Gas Meter	☐	Field filter
☐	Calibration Gas/Regulator	**Tools**	
☐	Tedlar Baggies	☐	Screwdriver/wrenches/pipe wrench
GW Monitoring Equipment		☐	Additional pump/battery for pump
☐	Water level indicator/Interphase probe (batteries)	☐	Tubing or rope cutter
☐	Water quality meter	**Decontamination**	
☐	Pump and tubing	☐	Bucket
☐	Flow-through cell	☐	Scrub brush
☐	Rope/bailers	☐	Detergent solution
☐	Calibration Standards	☐	Deionized rinsing water
Laboratory and Shipping Supplies		**Other**	
☐	Bottle sets	☐	Indelible pen/waterproof marker
☐	Field blanks (trip blank, temperature blank)	☐	Paper towel/Handy Towelettes
☐	Quality Control sets (equipment blank, duplicate, MS/MSD)	☐	Stainless steel bowls and spoons for sample mixing
☐	Sample labels	☐	Zipping Baggies/Garbage bags
☐	Coolers with packing materials	☐	Keys for gates/locks
☐	Ice	☐	GPS and batteries
☐	Custody seals	☐	Duct tape/clamps
☐	Packing tape/Duct tabpe	☐	Camera
☐	Air bill/Address label/Courier label	☐	Logging charts (USCS, ASTM, Muncell)
☐		☐	
☐		☐	

INVESTIGATIVE DERIVED WASTE MANAGEMENT

PURPOSE

This SOP is intended to assist the field staff in determining the appropriate manner in which to handle investigation derived wastes (IDW). It may be necessary to deviate from the guidelines presented in this SOP on the basis of the project requirements.

This document is intended to provide a general overview of appropriate IDW management practices; however it is the Project Manager's responsibility to ensure that IDW is properly managed in accordance with applicable federal, state, and local law, the contract requirements, and good professional judgment.

Relevant EHS Support SOPs

- SOP-04 Field Documentation
- SOP-05 Sample Management and Shipping.

Required Materials

- Field logbook and field documentation
- Site maps, site layouts, site plans
- Health and Safety Plan
- Appropriate personal protective equipment (PPE)
- Black waterproof and/or indelible ink pens
- Containers for waste (e.g., 55-gallon open and closed top drums) and material to cover waste to protect from weather (e.g., plastic covering)
- Hazardous /non-hazardous waste drum labels (weatherproof)
- Plastic garbage bags, zip lock storage bags, roll of plastic sheeting
- Drum socket/gloves/rubber mallet.

1.0 INVESTIGATIVE DERIVED WASTE GENERAL CONSIDERATIONS

IDW typically includes drilling cuttings, drilling muds, purged well water, decontamination fluids, sample residues, decontamination fluids, PPE, and other disposable equipment that is generated from sampling and investigation activities. Generally, the management of IDW must meet the following criteria:

- It must be protective of human health and the environment.
- It must comply with the applicable or relevant and appropriate requirements (ARARs) unless the ARAR is waived by the applicable regulatory authority. Potential ARARs for IDW include regulations under the Resource Conservation and Recovery Act (RCRA), which include the underground injection control regulations and the Land Disposal Restrictions (LDR); the Clean Water Act; the Clean Air Act; the Toxic Substances Control Act (TSCA); and applicable State environmental laws. To the extent that the United States Environmental Protection Agency (USEPA) has issued regulations relating to cleanup standards for specific chemicals, those standards must normally be followed unless either a waiver has been obtained or different site-specific cleanup standards have been established by the appropriate regulatory authority.

The most important general elements of managing IDW include:

- Leaving a site in a condition that is similar to the condition that existed prior to the investigation.
- Minimizing the quantity of wastes generated.
- Removing wastes that pose an immediate threat to human health or the environment.
- Leaving on site those wastes that do not require off-site disposal or long-term above-ground containerization.
- Complying with federal and state ARARs.
- Planning and coordination for IDW management.

The following are general guidelines for the disposal for IDW, based on a review of existing USEPA guidance documents. These guidelines may be superseded by applicable state or local laws or other ARARs.

- Different waste streams should not be mixed (i.e., soils should be containerized in separate drums from water, potentially hazardous from non-hazardous, and so on).
- Soils—Drill cuttings or similar contaminated soils should be placed in an appropriate container and prepared for disposal at an appropriate disposal facility, whether on-site or off-site. Soils contained in a roll off box may require the use of protective covers to minimize effects of weather (e.g., rain), odors, or dust.
- Hazardous water, or other aqueous liquid—Hazardous water or other aqueous liquids should normally be drummed and disposed of at a treatment storage or disposal facility, as appropriate.
- Decontamination Fluids—Decontamination fluids should be drummed and disposed of at an appropriate disposal facility, whether on-site or off-site.
- Non-hazardous water—Non-hazardous water should be drummed and disposed of at an appropriate disposal facility, whether on-site or off-site.
- PPE and Disposable Equipment—Disposable PPE and equipment that has been decontaminated may be double-bagged and placed in appropriate solid waste containers.
- Such materials reasonably believed to be hazardous should be treated as if they are hazardous pending analytical confirmation.

1.1 Field Compliance with Requirements

Compliance with the applicable legal requirements can generally be achieved by complying with general principles:

- Identify the contaminants. The analysis can be based on reasonably available information and the application of reasonable professional judgment. Analytical testing may not be required under all circumstances.
- Characterization of the IDW. Use existing information (manifests, Material Safety Data Sheets (MSDS), previous test results, knowledge of the waste generation process, and other relevant records), best professional judgment, and waste characterization analysis, as necessary.
- Minimize the volume of the IDW. IDW containing hazardous substances or wastes should be carefully segregated from other nonhazardous IDW in order to minimize the volume of IDW that must be disposed of as hazardous waste, to the best extent feasible.
- Determine the ARARs. Attention should include RCRA, TSCA and applicable state requirements. Individual State requirements may be more stringent than the corresponding federal requirements. Waivers should be sought when justified.
- Properly containerized IDW. Separate and contain potentially contaminated PPE, disposable equipment, decontamination fluids, sample media (e.g., drilling fluid, soil, groundwater). Comply with applicable containerization, labeling, and storage and recordkeeping requirements.

1.2 IDW Field Procedures

Procedures for IDW and disposal should include the following guidelines:

1. Inform the On-Site Facility Manager or personnel that containerized IDW may be temporarily stored on site while awaiting pick up for off-site disposal.
2. Initiate and coordinate the procurement process for IDW analytical testing, pick up, and disposal.
3. Prepare the adequate numbers and types of containers for storage and, if necessary, analytical testing.
4. If a large quantity or volume of IDW is anticipated to be generated, containers, such as roll-off boxes, Baker tanks, poly tanks, and bins (**Figure 1**), should be considered.

Figure 1 Example of a Roll-off Box, Baker Tank, and Various Sizes of Poly Tanks

5. The size of the roll-off bin, Baker tank, poly tank will be recorded. Volume or weight calculations within the large-quantity sized container can be estimated by:

    a. Reading the volume gage on the outside of the poly tank (usually in gallons or liters).
    b. Measuring the height of the water in a bin, tank or poly, and multiplying to the length and width of the bin or tank.
    c. Standard roll-off bins generally have an estimated volume or tonnage associated with them. If this volume or tonnage is available, it can be used. Weight or tonnage can vary based on the material type (e.g., clay, sand, construction material) and associated density.

6. If a small quantity or volume of IDW is anticipated to be generated, 55-gallon (200 liter) steel drums should be used and properly labeled.
7. Steel drums, if used, will be Department of Transportation (DOT)-approved steel drums or equivalent. A typical DOT-approved steel drum (Figure 2) cover comes with 1½-inch (25 mm) vent hole, a 2-inch (50 mm) opening (sometimes referred to as a bunghole), and a rubber seal that fits into the lip of the cover. The drum is sealed to the lid cover by tightening with a bolt and nuts.

Figure 2 Typical DOT-approved Steel Drum with Cover Showing Vent and Bunghole

8. Drums should be inspected prior to use to ensure there is no denting, pitting, or other visual observations that would indicate wear. Drums should be clean and not have been used for storage of other materials or chemicals.
9. Drums should be filled to about 80% capacity. If working in cold weather conditions (i.e., temperatures below freezing), water-based IDW drums should allow for expansion in the container due to potential freezing.
10. An IDW log or drum log will be maintained during the investigation. An IDW log or drum log tracks the volume of IDW, roll-off or Baker Tank number, the contents, the start generation date, drum numbers, storage location, and the storage time requirements. In some cases, particularly for drum contents, it may be a good practice to further define the contents of the drum by location (e.g., Soil cuttings from SB-2, SB-4).
11. If a waste characterization sample is required, consult with the waste hauler or location of final disposition (e.g., landfill) to determine the volume of sample needed and the analytical testing required. If a composite sample is required for waste characterization, a small volume of similar media (i.e., soil, water) from each drum and/or container will be mixed and placed in the appropriate laboratory jar or container. The sample will be analyzed by the subcontracted laboratory. Waste characterization samples will be managed in accordance with SOP-4 Sample Management and Shipping.
12. Waste generated during field activities will be stored, transported, and disposed of according to applicable state, federal, and local regulations. All wastes classified as hazardous will be disposed of at a licensed treatment storage and disposal facility or managed in other approved manners.
13. If the IDW is determined hazardous, the IDW has to be removed from the facility within 90 days. A state-certified hazardous waste hauler shall transport all wastes classified as hazardous.

Typically, the facility receiving any waste can coordinate a hauler to transport the waste. Shipped hazardous waste shall be disposed of in accordance with all federal, state, or regulatory requirements.

14. If the IDW is determined characteristically non-hazardous, disposal of the waste may include:
    a. Off-site disposal. The approved waste facility can coordinate a hauler to transport the waste. Shipped waste shall be disposed of in accordance with all federal, state, or regulatory requirements.
    b. On-site disposal. Under some conditions, the generated wastes may be disposed on site. For instance, soils or solids may be disposed in a facility-approved disposal unit, or water, groundwater, or decontamination water may be disposed in a facility water treatment plant. Disposing of non-hazardous generated wastes on-site must obtain approval from the On-Site Facility Manager or personnel in charge of site-generated wastes.
15. All waste manifests or bills of lading will be signed by the client or the client's designee. Under no circumstance should a representative from EHS Support sign a waste manifest or bill of lading.
16. PPE and disposable equipment should be decontaminated as necessary and double-bagged for disposal at a municipal landfill or collected in drums for disposal at a hazardous waste facility.
17. Trash that is generated as part of field activities may be disposed of as general refuse.

1.3 Labeling

Containers used to store IDW must be properly labeled. Two general conditions exist:

1. Waste characteristics are known to be either hazardous or nonhazardous; or
2. Waste characteristics are unknown until additional data are obtained.

Waste labels should be constructed of a weatherproof material and filled out with a permanent marker to prevent being washed off or becoming faded by sunlight. It is recommended that waste labels be placed on the side of the container, since the top is more subject to weathering. However, when multiple containers are accumulated, it may be helpful to include labels on the top of the containers to facilitate organization and disposal. If no sample labels are not available, a paint pen can be used to temporarily identify the contents until a sample label is available. Examples of hazardous and non-hazardous waste labels are included as **Figure 1.**

Figure 3 Example of a Hazardous and Non-Hazardous Waste Label

For situations where the waste characteristics are known, the waste containers should be packaged and labeled in accordance with the federal, state, or applicable regulations that may govern the labeling of waste. In some cases, site-specific labels may be available.

1.3.1 Known Hazardous or Non-Hazardous Waste

The following information shall be placed on Non-Hazardous Waste Labels:

- Description of waste (e.g., purge water, soil cuttings)
- Client or Responsible Party contact information (e.g., contact name and telephone number)
- Date when the waste was first accumulated.

The following information shall be placed on Hazardous Waste Labels:

- Description of waste (e.g., purge water, soil cuttings)
- Generator information (e.g., Client or Responsible Party name, address, and telephone number)
- USEPA identification number (supplied by Site Client Representative)
- Date when the waste was first accumulated.

1.3.2 Unknown Hazardous or Non-Hazardous Waste

When the final characterization of a waste is unknown, a notification label should be placed on the drum and the following information included on the label:

- Include the words “Waste Characterization Pending Analysis” on the label
- Description of waste (e.g., purge water, soil cuttings)
- Client or Responsible Party contact information (e.g., contact name and telephone number)
- Date when the waste was first accumulated.

Once the waste has been characterized, the label should be changed as appropriate for a nonhazardous or hazardous waste.

1.4 Storage

A temporary storage facility or location is required for containers storing IDW. Waste could be stored either on-site or off-site and should only be accessible by authorized personnel or officials. Ideally, the drums should be stored in a facility that encloses the drum so that its contents are not visible to passers-by and to prevent precipitation collection, run on, or infiltration from occurring. Consideration should be given to minimizing the possibility of spilling, traffic incident, fire, explosion, or any unplanned release of the IDW waste to the environment. No humans, children in particular, may have access to the storage area.

1.5 Regulatory Requirements

The following federal and state regulations shall be used as resources for determining waste characteristics and requirements for waste storage, transportation, and disposal:

- Code of Federal Regulations (CFR), Title 40, Part 261;
- CFR, Title 49, Parts 172, 173, 178, and 179.

2.0 RECORDS

Each container of waste generated shall be recorded in the field notebook used by the person responsible for labeling the waste. After the waste is disposed of, either by transportation off-site or disposal on-site in an approved disposal area, an appropriate record shall be made in the same field notebook to document proper disposition of IDW.

Field notes will be kept in a bound field logbook or approved field documentation following the format specified in SOP-04 Field Documentation. The following information should be recorded in an IDW log or drum log:

- Type of IDW (e.g., drilling mud, soil, purge water, etc.)
- Volume of IDW per media
- Roll-off bin or Baker tank unit number and rental company name
- Roll-off bin or Baker tank size
- Drum number
- Start date of IDW collection
- Storage location of the drums
- Label type affixed to drum (e.g., Non-hazardous, Hazardous)
- Storage time requirements.

Additional documentation includes:

- Collection of Waste Characterization chain of custody, if required
- Copy of signed manifests or bill of lading, if applicable
- Weight tickets, if applicable
- Location of final disposition.

FIELD EQUIPMENT OPERATION AND CALIBRATION

PURPOSE

The purpose of this SOP is to provide general procedures for the calibration of field instruments used during field investigations for field screening and measurements. This SOP applies to calibration for equipment used during field investigations with additional focus on the more commonly used field instruments - a multi-parameter water quality indicator and a photo-ionization detector (PID).

The manufacturer's manual should be referred to for calibration and standard operating procedures as well as operating instructions for the various field equipment. It is beyond the scope of this SOP to describe all alternatives to equipment type, calibration procedures, and maintenance.

Relevant EHS Support SOPS

- SOP-04: Field Documentation

Attachments

- Attachment A Examples of Instrument Calibrations Forms
  - Multi-probe Water Quality Meter Calibration Form
  - Photoionization Detector or Single Gas Meter Calibration Form
  - Bump Test Form
  - Attachment B Calibration and Maintenance--Portable Multi-Probe Water Quality Meter (YSI 556)
- Attachment C Portable Gas Meters
  - Calibration and Maintenance of a Photo-ionization Detector (Rae System 2000).

Required Materials

- Field logbook or field documentation
- Black waterproof and/or indelible ink pens
- Appropriate personal protective equipment (PPE)
- Field equipment and supplies necessary to perform the task
- Calibration standards.

1.0 FIELD EQUIPMENT CALIBRATION

Calibration of field equipment is conducted to ensure observations obtained in the field obtain a level of accuracy. Calibrate field monitoring equipment within calibration acceptance criteria, based on contaminants of concern potentially encountered, and within the instruments operational limits. Equipment calibration is only as good as the quality and accuracy of the calibration standard used. Therefore, verify that the calibration standards meet the minimum requirements for source and purity recommended by the instrument manufacturer.

Field monitoring equipment will be properly calibrated and remain operable in the field. All field equipment will be thoroughly inspected for functionality and calibrated prior to use.

1.1 General Field Equipment Calibration Procedures

- The type of field equipment used should be consistent for the activities performed to ensure the variability when monitoring/sampling is minimized.
- Instruments used during the field activities will be checked for possible malfunctions, cleaned, and calibrated prior to use.
- A calibration log will be completed for all equipment requiring calibration. Examples of a water quality meter calibration, a portable gas meter calibration, and a bump test form are included as **Appendix A**.
- Common field equipment include a multi-probe water quality meter and a photo-ionization meter. Field equipment calibration and maintenance for a multi-probe water quality meter, specifically a YSI 556, is included as **Attachment B**. Field equipment calibration and maintenance for a portable gas meter, specifically a RAE System 2000 PID, is included as **Attachment C**. Included in **Attachment C** is the function of a bump test on a multi-gas detector.
- Calibration verification will be performed on field instruments prior to their initial use, at least once daily, as specified in the work plan, and/or whenever indications of instrument malfunction or questions in the instrument's readings are observed. The calibration schedule is outlined in **Table 1**.

Table 1 Calibration Schedule

Equipment	Calibration Standard	Frequency
Water quality meter	As required for project	Daily
Photoionization Detector	Isobutylene	Daily

- Project-specific requirements may require calibration of field monitoring equipment at a greater frequency (e.g., mid-day, end of day).
- Attempt to recalibrate instruments before collecting additional data if instrument readings appear to be irregular or drifting.
- Calibrate sensors in a controlled environment such as in the designated field preparation room. Avoid calibrating units in the field since it can introduce error.

In general, instrument identification and calibration should include the following steps:

1. Determine which instruments are needed for the specific field tasks.
2. Obtain the necessary instruments and associated calibration gases and/or reference standards for calibration.
3. Check expiration dates on calibration gases and/or standard solutions. Replace the standard if out of date.

4. Assemble the instrument and turn it on, allowing the instrument to warm up.
5. Check the battery charge. Charge or replace if necessary.
6. Clean the instrument (if necessary).
7. Calibrate the instrument prior to field use in accordance with manufacturer's procedures, and if necessary adjust the instrument to meet calibration specifications.
8. If the instrument malfunctions and the malfunction cannot be corrected, obtain another instrument and have the malfunctioning instrument repaired or returned.
9. In order for an instrument to be considered calibrated and ready for use, the instrument must read within at least 10% of the calibration standard, or as outlined in the project work plan.
10. If the instrument reads within 10% of the reference standard value upon first testing, the instrument will be considered calibrated. If the instrument reads >10% difference from the reference standard value it will be calibrated, recalibrated, or taken out of service. Consult the manufacturer's instruction manual for more specific details on the instrument in use.
11. Document calibration activities and results on the Instrument Calibration Log **(Attachment A)** and record the activity in the Field Log Book.
12. Recharge batteries and add carrier gases (if applicable) at the end of each day or as needed.

2.0 RECORDS

A record will be maintained of the calibration, and/or calibration verification. The records will include the following information, where applicable:

- Date and time of calibration activity
- Project name and number
- Personnel conducting the calibration
- Serial number and/or meter numbers
- Instrument name and model number
- Calibration gases or reference standard used, concentration of the gases and solutions used, and the associated units (if applicable), and lot numbers of calibration intervals
- Instrument readings after calibration
- Instrument readings of calibration verification data.

Additional documentation that will be retained include:

- Equipment rental shipping and calibration documents (provided by the Rental Company)
- Service and repair records
- Certificates of traceability for reference standards.

The calibration activity will be recorded in the field logbook. Calibration data will be recorded in the Instrument Calibration Log and/or the field logbook. Examples of Instrument Calibration Log are included in **Attachment A.**

3.0 CORRECTIVE ACTION

Field instruments can be affected by changes in temperature, humidity, and barometric pressure. Instrument calibration should be checked when significant changes in weather occur. In addition, instrument calibration should be checked if maintenance activities (e.g. battery replacement, lamp replacement, or refueling) are required, if instrument malfunctions occur, or when questionable readings are observed.

Corrections and reviews of calibration records will be completed in accordance with the SOP for Field Notes and Documentation. Errors will be corrected by drawing a single line through the error, entering the correct information, initialing and dating the change. Materials that obliterate the original information, such as correction fluids and/or mark-out tapes, are prohibited. All corrections will be initialed and dated.

ATTACHMENT A EXAMPLES OF INSTRUMENT CALIBRATIONS FORMS

EHS Support consider it done

INSTRUMENT CALIBRATION LOG

MULTI-PARAMETER WATER METER

PROJECT NAME	**EQUIPMENT TYPE**
PROJECT LOCATION	**MAKE/MODEL/SERIAL NO**
PROJECT NUMBER	**PAGE _____ OF _____**

CALIBRATION REFERENCE SOLUTION

Parameter	Standard	Units	Buffer Expiration Date
pH	4.01	S.U.	
	7		
	10.01		
Conductivity	_____	_____	
ORP	_____	_____	

Date/Time	Callibrated by:	Temp	pH: Standard 1	pH: Standard 2	pH: Standard 3	Conductivity	ORP (Redox)	Dissolved Oxygen	Comment
		°C	7			___ S/cm	mV	mg/L	

EHS Support consider it done

INSTRUMENT CALIBRATION LOG

PHOTOIONIZATION DETECTOR OR SINGLE GAS METER

PROJECT NAME	**EQUIPMENT TYPE**
PROJECT LOCATION	**MAKE/MODEL/SERIAL NO**
PROJECT NUMBER	**PAGE _____ OF _____**
CALIBRATION GAS TYPE	**CALIBRATION STANDARD CONCENTRATION**
CALIBRATION GAS TYPE	**CALIBRATION STANDARD CONCENTRATION**

Date/Time	Calibrated by:	Calibration Results	Comments

MULTI-GAS METER BUMP TEST LOG

PROJECT NAME	**EQUIPMENT TYPE**
PROJECT LOCATION	**MAKE/MODEL/SERIAL NO**
PROJECT NUMBER	**PAGE _____ OF _____**
CALIBRATION GAS TYPE	**CALIBRATION STANDARD CONCENTRATION**
CALIBRATION GAS TYPE	**CALIBRATION STANDARD CONCENTRATION**

BUMP TEST

Date/Time	Calibrated by:	Did Bump Test Pass?	Comments

ATTACHMENT B CALIBRATION AND MAINTENANCE--PORTABLE MULTI-PROBE WATER QUALITY METER

1.0 PORTABLE MULTI-PARAMETER WATER QUALITY PROBE CALIBRATION

Water quality meters and instruments vary by manufacturer and model number. Instructions for maintenance and operation of all these field instruments are described in the operation manuals provided by the manufacturer. The manufacturer's manual should take precedent over the procedures described herein. The procedures described below are for portable multi-parameter water quality probes such as the YSI 556 or AquaProbe. Additional probes, such as a total dissolved solid or salinity, are available and should be used as directed by the Project Plan and calibrated according to the manufacturer's manual.

Figure 1 Example of AquaProbe® AP-5000 Multi-parameter Probe and Multi-parameter Readout Instrument (YSI 556).

If a "RapidCal" or "QuickCal" option is available for the instrument, initiate the calibration and follow the calibration prompts. The volume of the calibration solutions must be sufficient to cover both the probe and temperature sensor (see manufacturer's instructions for additional information). While calibrating or measuring, make sure there are no air bubbles lodged between the probe and the probe guard.

1.1 pH

Calibrate daily using at minimum a 2-point calibration method. A 2-point calibration uses two pH reference standard solutions (for example, pH 4 and pH 7 or pH 7 and pH 10) and is valuable only if the water being monitored is known to be either basic or acidic. For example, if the pH is known to vary between 5.5 and 7, a 2-point calibration with a pH 7 and pH 4 reference standard solution is sufficient.

If the pH of water being measured is unknown, a 3-point calibration method is preferred. Using this calibration, the pH sensor is calibrated with a pH 7 standard and two additional reference standards (such as pH 4 and pH 10). The 3-point calibration method accounts for the full pH range and assures maximum accuracy when the pH of the media to be monitored cannot be anticipated. Typically, the procedure for a 3-point calibration is the same as for a 2-point calibration, but the instrument may prompt you to select a third pH reference standard.

1.1.1 pH Calibration Procedure

1. Allow the reference standards to equilibrate to the ambient temperature.
2. The calibration container should be filled with the reference standard solution so the pH probe and temperature sensor are immersed in the reference standard.
3. Record reference standard solution information and temperature on the Instrument Calibration Log (Attachment A). Temperature can affect the pH, therefore enter the pH calibration values based on the appropriate temperature as labeled on the pH calibration solutions used or according to **Table 1**, below.

4. Record the final pH calibration reading, with the corresponding temperature, on the Field Calibration Sheet.
5. Remove probe from its storage container and rinse with a small amount of reference standard.
6. Select monitoring/run mode for pH calibration on the data logger or screen prompt. Immerse probe into the initial reference standard (e.g., pH 7).
7. Enter the reference standard value (e.g., 7) into the instrument. The readings should remain within manufacturer's specifications. If they change, re-calibrate. If readings continue to change after re-calibration, consult manufacturer.
8. Remove probe from the reference standard and rinse with a small amount of initial standard.
9. Immerse probe into the second standard (e.g., pH 4). Repeat step 5
10. If instrument only accepts two standards, the calibration is complete. Go to step 10.
11. Immerse probe in third buffered standard (e.g., pH 10) and repeat steps 5 to 7.
12. Remove probe from the third standard and record results.
13. Toggle from Calibration Mode to Monitoring/Run mode. To ensure the initial calibration standard (e.g., pH 7) has not changed, immerse the probe into the initial standard. Wait for the readings to stabilize. The reading should read the initial standard. If not, recalibrate.

Table 1 pH Buffer Solution Values Based on Temperature

Temperature	pH Buffer			Temperature	pH Buffer		
°C	4.01	7.0	10.01	°C	4.01	7.0	10.01
0	4	7.11	10.32	24	4.01	7	10.02
1	4	7.11	10.31	25	4.01	7	10.01
2	4	7.1	10.29	26	4.01	6.99	10
3	4	7.09	10.28	27	4.01	6.99	9.99
4	4	7.09	10.26	28	4.01	6.99	9.98
5	4	7.08	10.25	29	4.01	6.99	9.98
6	4	7.08	10.23	30	4.02	6.98	9.97
7	4	7.07	10.22	31	4.02	6.98	9.96
8	4	7.07	10.21	32	4.02	6.98	9.95
9	4	7.06	10.2	33	4.02	6.98	9.94
10	4	7.06	10.18	34	4.02	6.98	9.93
11	4	7.05	10.17	35	4.02	6.97	9.93
12	4	7.05	10.16	36	4.03	6.97	9.92
13	4	7.04	10.14	37	4.03	6.97	9.91
14	4	7.04	10.13	38	4.03	6.97	9.9
15	4	7.03	10.12	39	4.03	6.97	9.9
16	4	7.03	10.11	40	4.03	6.97	9.89
17	4	7.02	10.10	41	4.04	6.97	9.88
18	4	7.02	10.09	42	4.04	6.97	9.88
19	4	7.02	10.08	43	4.04	6.96	9.87
20	4	7.01	10.06	44	4.04	6.96	9.86
21	4.01	7.01	10.05	45	4.04	6.96	9.86
22	4.01	7.01	10.04	46	4.05	6.96	9.85
23	4.01	7	10.03	47	4.05	6.96	9.85

1.1.2 pH Probe Storage and Maintenance

A pH meter with a glass probe needs to be stored wet. It is best to use an "electrode storage solution" or a pH 4 or 7 buffer, but tap water will sometimes work for short storage periods. Never use distilled or deionized water for storage; this will ruin the probe. During storage, the probe can be immersed in the storage solution or in contact with a soaked sponge or paper towel, the cap for the probe will typically have a sponge or a reservoir to fill with solution. If a probe dries out, usually it can be reconditioned by soaking in a storage or buffer solution for a few hours.

Electrodes with glass membranes can get dirty after heavy use, which affects the sensitivity of the electrode. Soaking the electrode in an "electrode cleaner solution" will help. The typical lifetime of a glass pH probe is about 6 months to 2 years, dependent upon if the pH probe is used correctly and is properly maintained. Most meters will allow you to change out the electrode when it is time for replacement.

1.2 Conductivity

Perform calibration for conductivity according to the recommended manufacturer's calibration instructions. Conductivity is generally calibrated for Specific Conductance and entered as milliSiemens per centimeter (mS/cm) at 25 degrees Celsius (°C). Conductivity standard solution at 25°C has a specific conductance value of 1.413 mS/cm (also 1413 microSiemens per centimeter (µS/cm) or 1413 µmho/cm) when at a temperature of 25°C. If the temperature varies from 25°C, the conductivity will vary from the standard. Record the reference standard solution information and conductivity reading with the corresponding temperature on the Instrument Calibration Log.

1.2.1 Conductivity Calibration Procedure

1. Allow the calibration standard to equilibrate to the ambient temperature.
2. Remove probe from its storage container, rinse the probe with a small amount of the conductivity reference standard (discard the rinsate), and place the probe into the reference standard.
3. Select the Monitoring/Run mode. Allow the probe temperature to stabilize.
4. Look up the conductivity value at this temperature from the conductivity versus temperature correction table (**Table 2**). Select Calibration Mode, then Conductivity. Enter the temperature corrected conductivity value into the instrument.

Table 2 Value Relationship of a 1,413 µS/cm (1.413 mS/cm) Reference Standard to Temperature

Temperature	Conductivity Standard	Temperature	Conductivity Standard
°C	**1413 µS/cm**	**°C**	**1413 µS/cm**
0	776	24	1386
1	799	25	1413
2	822	26	1441
3	846	27	1468
4	870	28	1496
5	894	29	1524
6	918	30	1552
7	943	31	1580
8	968	32	1608
9	992	33	1636
10	1017	34	1665

Temperature	Conductivity Standard	Temperature	Conductivity Standard
11	1043	35	1693
12	1068	36	1722
13	1094	37	1751
14	1119	38	1780
15	1145	39	1808
16	1171	40	1837
17	1198	41	1866
18	1224	42	1896
19	1251	43	1925
20	1277	44	1954
21	1304	45	1983
22	1331	46	2013
23	1358	47	2042

5. Select Monitoring/Run Mode. The reading should remain within manufacturer's specifications. If it does not, recalibrate.
6. Read the conductivity value on the instrument and compare the value to the specific conductance value on Table 2. The instrument value should agree with the standard within the manufacturer's specifications. If not, re-calibrate. If the re-calibration does not correct the problem, the probe may need to be cleaned or serviced by the instrument manufacturer.

1.2.2 Conductivity Probe Storage and Maintenance

These probes can usually be stored dry. Conductivity probes can get dirty over time, which interferes with the flow of electricity and can skew measurements. Clean the probes as recommended in the manufacturer's manual.

1.3 Oxygen Reduction Potential (ORP)

Most ORP meters are pre-calibrated in the factory and do not need to be calibrated before use. If verification of accuracy is needed there are "validation solutions" which show if a meter is reading correctly. A calibration check of the ORP probe can be performed by placing it into a Zobell™ solution that is within approximately 10°C of the expected groundwater temperature, or as close to groundwater or surface water temperature as practical.

1.3.1 ORP Calibration Procedures

1. If the instrument instruction manual states that the instrument is factory calibrated, then verify the factory calibration against the standard. If they do not agree within the specifications of the instrument, the instrument will need to be re-calibrated by the manufacturer.
2. Remove the probe from its storage container, and place it into the standard.
3. Select Monitoring/Run Mode.
4. Wait for the probe temperature to stabilize, then record the temperature.
5. Look up the millivolt (mv) value at this temperature from the millivolt versus temperature correction table usually found on the standard bottle, on the standard instruction sheet, or in the manufacturer's manual. You may need to interpolate millivolt value between temperatures.
6. Select Calibration Mode, then "ORP". Enter the temperature-corrected ORP value into the instrument.
7. Select Monitoring/Run Mode. The readings should remain unchanged within manufacturer's specifications. If they change, recalibrate.

1.3.2 ORP Probe Storage and Maintenance

ORP meters are stored wet in a storage or buffer solution, and not in deionized/distilled water. If left dry, the probe can be reconditioned by soaking in a storage or buffer solution for about one hour. Electrode cleaning solutions should be used as needed to keep the probe clean and working correctly.

1.4 Dissolved Oxygen

Most meters allow calibration of the DO meter in air or against a wet sponge or paper towel, which gives a "saturated air" calibration. The only solution typically used for calibrating a DO meter is a "zero-oxygen" solution. This solution is used only if the samples being measured have very low oxygen concentrations.

There are two primary types of dissolved oxygen sensing technologies available: the optical based sensing method, which is commonly referred to as luminescent, and the Clark electrochemical or membrane-covered electrode. Within these two types of technologies, there are slight variations to calibration and measurement. Check the manufacturer's manual to ascertain the requirements of the probe being used.

1.4.1 DO Calibration Procedure

1. Place a wet piece of cloth or paper towel in the cap that covers the probe. The probe should not come in contact with the wet cloth or towel. The probe must fit tightly into the container to prevent the escape of moisture evaporating from the sponge or towel.
2. Turn on the instrument to allow the DO probe to warm up.
3. Allow the confined air to become saturated with water vapor (saturation occurs in approximately 10 to 15 minutes). Select Monitoring/Run Mode. Check temperature. Readings must stabilize before continuing to the next step.
4. Select Calibration Mode; then select "DO %".
5. Enter the local barometric pressure (usually in millimeters of mercury) for the sampling location into the instrument. This measurement must be determined from a local barometer. Do not use barometric pressure obtained from the local weather services unless the pressure is corrected for the elevation of the sampling location. [Note: inches of mercury times 25.4 mm/inch equals mm of mercury or consult Oxygen Solubility at Indicated Pressure chart attached to the SOP for conversion at selected pressures].
6. The instrument should indicate that the calibration is in progress. The instrument will take one minute or more to calibrate. After calibration, the instrument should display %-saturated DO.
7. Record the result in the Instrument Calibration Log.
8. Select Monitoring/Run Mode. Compare the DO (mg/L) reading to the Oxygen Solubility at Indicated Pressure chart as provided in the Equipment Manual. The numbers should agree. If they do not agree to the accuracy of the instrument (usually ± 0.2 mg/L), repeat calibration. If this does not work, change the membrane and electrolyte solution.
9. If a DO reference standard is used, remove the probe from the container and place it into a 0.0 mg/L DO standard. The standard must be filled to the top of its container and the DO probe must fit tightly into the standard's container (no headspace). Check temperature readings, as they must stabilize before continuing.
10. Wait until the "mg/L DO" readings have stabilized. The instrument should read 0.0 mg/L or to the accuracy of the instrument (usually ± 0.2 mg/L). If the instrument cannot reach these values, it will be necessary to clean the probe, and change the membrane and electrolyte solution. If this does not work, prepare a new 0.0 mg/L DO standard. If these measures do not work, contact manufacturer.
11. Record the result in the Instrument Calibration Log.

Check the dissolved oxygen reading against the theoretical value of saturated oxygen at different elevations. If the instrument is not reading in the proper range, it should be recalibrated, or the dissolved oxygen probe membrane should be replaced.

1.4.2 DO Probe Storage and Maintenance

Dissolved oxygen meters that use membranes should be stored wet to prevent the electrolyte solution and membrane from drying out. This can be done by submerging the probe in tap water or placing it against a moistened sponge, which many meters include for storage. If the probe dries out, the electrolyte solution and membrane may have to be changed.

Dissolved oxygen probes with membranes should have the membrane and electrolyte solution changed about every 2 months with normal use. Continual use may also result in deposits accumulating on the metal cathode. The deposits can be removed by removing the membrane from the DO sensor tip, and lightly brushing the metal end with very fine sandpaper (400 grit). Multi-parameter meters typically come with a maintenance kit that includes membranes, electrolyte solution, and a sanding disk.

Optical DO meters do not contain electrolyte solution or membranes, so they can be stored dry. Optical DO meters do not need any maintenance except for changing the sensing element, typically once a year with normal use.

1.5 Turbidity

Turbidity meters have calibration standards that are usually between 0 and 1000 nephelometric units (NTU). Most turbidity meter kits come with a set of these standards. When choosing which calibration standards to use, choose a reference standard that is near the anticipated turbidity of the water sample. The more reference standards used during the calibration, the better the accuracy.

1.5.1 Turbidity Calibration Procedures

1. Using a standard in the range of 5 to 20 NTUs, calibrate according to manufacturer's instructions or verify calibration if instrument will not accept a second standard. If verifying, the instrument should read standard value to within the specifications of the instrument. If the instrument has range of scales, check each range that will be used during the sampling event with a standard that falls within that range.
2. Record the results in the Instrument Calibration Log.

1.5.2 Turbidity Probe Storage and Maintenance

There are no storage requirements. The only maintenance involves the glass cuvettes. Light must be able to pass through the cuvettes, so if there are scratches, dirt or even oils from fingers on the sides of the cuvettes, it could skew the measurements. Make sure the cuvettes are clean, dry and free of scratches before placed in the turbidity meter.

ATTACHMENT C PORTABLE GAS METERS

1.0 PORTABLE GAS METER

Many instruments are available for organic vapor monitoring, as well as monitoring of explosive atmosphere, oxygen levels, toxic gas, and airborne dust. Because it is beyond the scope of this SOP to describe all of these alternatives, this SOP will focus on conducting air monitoring using a PID. In addition, the purpose of a function check (also known as a bump test) will be discussed; however the calibration of a multi-gas meters (e.g., 4-gas meters, oxygen, hydrogen sulfide) will not be included in this SOP. Calibration of a multi-gas meters should follow recommended instructions in the manufacturer's manual.

All field air monitoring equipment will be calibrated onsite.

1.1 Function Check (Bump Test)

The function check (bump test) is a qualitative function check in which a challenge gas is passed over the sensor(s) at a concentration and exposure time sufficient to activate all alarm settings. The purpose of this check is to confirm that gas can get to the sensor(s) and that all the instrument's alarms are functional. The bump test or function check verifies that audible and visual alarms are activated, and does not provide a measure of the instrument's accuracy.

Figure 1 Examples of Multi-Gas Meters (Rae System, BW Honeywell)

1.1.1 Bump Test Procedure

The bump test procedure is simple and easy, usually taking less than a minute to perform.

1. Turn on the equipment and allow the temperature of the unit to equilibrate to its surrounding.
2. Connect the tubing from the challenge gas to the gas monitor intake.
3. If tubing contains an in-line balloon, pinch off the middle of the tubing.
4. Turn on or open the challenge gas valve. If tubing contains an in-line balloon, allow balloon to inflate slightly, but not burst. If balloon bursts, replace balloon.
5. If visual and audible alarms come one, the bump test is successful. Turn off the challenge gas and remove the tubing from the meter.
6. If alarms do not come on, trouble shoot to assess cause (e.g., is challenge gas valve open, does the meter require calibration or repair).
7. Document the bump test results.
8. Return the PID to a secure area. Clean the instrument.
9. Connect the instrument to charger and plug in the charger. The probe must be connected to the readout unit to ensure that the unit accepts a charge.

1.2 Photoionization Detector

The PID is generally set to factory defaults for alarm limits, and unless directed, shipped to the renter with alarm limits specific to isobutylene (100 ppm). Calibrating the PID is a two-point process using "fresh air "and a standard reference gas (also known as span gas). First, a "Fresh air" calibration that contains no

detectable volatile organic compounds (0.0 ppm) is used to set the zero point for the sensor. Then a standard reference gas that contains a known concentration of a given gas is used to set the second point of reference.

Figure 2 Examples of hand-held PIDs (RAE Systems, PhoCheck)

1.2.1 PID Calibration Procedures

1. Allow the temperature of the unit to equilibrate to its surrounding.
2. Verify the alarm limits are input correctly for the span gas (e.g., isobutylene). If the span gas or alarm limits on monitor do not match the span gas being used, consult with the manufacturer's manual and change the limits as appropriate.
3. To perform a fresh air calibration, use the calibration adapter to connect to the PID to a "fresh" air source such as a "zero-gas" cylinder or "zero-gas" transferred into a Tedlar® bag. The "fresh" air is clean dry air without any organic impurities. If such an air cylinder is not available, any clean ambient air without detectable contaminants can be used.
4. Chose the "Fresh Air Cal" or similar under the menu prompt.
5. Open the Tedlar® bag valve or cylinder valve to initiate flow through the tubing into the instrument sensor. There can be a 3 to 5-second delay in read-out depending upon the instruments sensitivity.
6. Allow instrument to run during the test until prompted to accept the test result.
7. Turn off any flow of gas.
8. Record the reference standard and result in the Instrument Calibration Log.
9. To perform the span gas calibration, attach a flow-limiting regulator to span gas cylinder. The regulator flow must match or exceed the intake pump of the meter. Alternatively, the span gas can be transferred to a Tedlar® bag.
10. Chose the "Span Gas Cal" or similar under the menu prompt.
11. Open the Tedlar® bag valve containing the span gas or the span gas cylinder valve to initiate flow through the tubing into the instrument sensor.
12. Allow the instrument to run during the calibration test until prompted to accept the test results. The calibration results should be very close to the span gas concentration. If within 10% of the span gas concentration, the calibration is considered complete.
13. Turn off any flow of gas.
14. Record the reference standard and result in the Instrument Calibration Log.
15. Return to the "Ready" prompt and press "Yes" button to use the instrument during the day.
16. At the end of the day or work shift, turn the instrument to OFF.
17. Return the PID to a secure area. Clean the instrument.
18. Connect the instrument to charger and plug in the charger. The probe must be connected to the readout unit to ensure that the unit accepts a charge.

1.2.2 PID Equipment Maintenance

Daily maintenance generally includes cleaning of the outside of the equipment and ensuring the PID lamp remains free of moisture. The white filter tip used to protect the PID lamp should be discarded and replaced if it becomes soiled or wet. If the PID lamp needs to be cleaned or replaced, consult the manufacturer's manual. In many cases, a replacement or backup PID should be used so the malfunctioning instrument can be repaired.

FIELD EQUIPMENT DECONTAMINATION

PURPOSE

The purpose of this SOP is to provide procedures for field decontamination of environmental sampling equipment and personal protective equipment (PPE). Decontamination of equipment and PPE is designed to ensure that sample cross-contamination, human-health exposure, and contamination transport is minimized.

This SOP covers field decontamination of small re-useable equipment using a manual cleaning application. Procedural modifications may be warranted depending on field conditions, equipment limitations, or limitations imposed by the procedure. Construction of a decontamination station, use of a high-pressure spray washer, and decontamination of heavy equipment and machinery is addressed under SOP-10 Drill Rig and Heavy Equipment Decontamination.

Relevant EHS Support SOPs

- SOP-04 Field Documentation
- SOP-06 Pre-Field Mobilization
- SOP-07 Investigative Derived Waste
- SOP-10 Drill Rig and Heavy Machinery Decontamination
- SOP-12 Quality Assurance/Quality Control Samples
- Any SOP that references using small equipment or re-used equipment.

Required Materials

- Field logbook and field documentation
- Site maps, site layouts, site plans
- Health and Safety Plan (HASP)
- Appropriate personal protective equipment (PPE)
- Brushes and flat-blade scrapers
- Hand-held spray bottles
- Potable water
- Rinsate water
- Laboratory-grade non-phosphate detergent
- Additional cleaning agents, as specified in the project work plan, with appropriate material safety data sheets
- Plastic waste bags or sheeting
- Waste containers (55-gallon drum or similar)
- Wash basins, buckets, pails, or tubs
- Paper towels and/or disposable drying cloths
- Drying shelves, as needed.

1.0 SMALL FIELD EQUIPMENT DECONTAMINATION GUIDELINES

Decontamination is performed as a quality assurance measure. Improperly decontaminated sampling equipment can lead to misinterpretation of environmental data due to interference caused by cross-contamination between samples or sample locations through use of contaminated equipment. Decontamination also protects field personnel from potential exposure to hazardous materials on equipment. Proper PPE will be worn when conducting decontamination procedures.

1.1 Decontamination Area

The decontamination area should be located, if possible, where decontamination fluids and soil wastes can be easily discarded or discharged in accordance with the project plan or waste management plan. Select the decontamination area so decontamination investigative derived wastes (IDW) can be managed in a controlled area with minimal risk to the surrounding environment. The decontamination area should be large enough to allow temporary storage of equipment and materials, drum or waste storage, and if required to contain a large area for decontamination of large equipment (e.g., for heavy equipment or hollow-stem auger). Large equipment decontamination and decontamination pad construction for large equipment decontamination procedures can be referenced in SOP-10 Drill Rig and Heavy Machinery Decontamination.

Smaller decontamination areas, such as equipment decontamination between groundwater or surface water sample locations, may take place at the sampling location. In this case, required decontamination supplies and equipment must be mobilized to the location. Bucket and decontamination stations may be placed on plastic sheeting, or in basins, or tubs to capture decontamination IDW. Decontamination materials, including wastes, should be stored in central location(s) to maintain control over the materials used or produced throughout the investigation program.

1.2 Decontamination Considerations

- No hand to mouth contact (e.g., eating, smoking, drinking, chewing) shall be permitted during decontamination activities.
- All contaminated equipment shall be disassembled to the extent practical to allow for thorough decontamination procedures.
- If heavy residuals (e.g., petroleum, creosote) are encountered during field activities, an appropriate solvent (e.g., methanol) should be considered to remove any residues from equipment. If additional solvents are required and approved per the project plan or Project Manager, the solvent must be properly used, collected, stored, and disposed of according to the investigative derived waste plan, health and safety plan, and/or material safety data sheet. Take care that materials and solutions used for decontamination procedures are not hazardous themselves or could potentially contaminate samples (that is, are acids and solvents).

1.3 General Decontamination Procedures

Field equipment for decontamination may include a variety of items used in the field for monitoring and/or for collection of soil, sediment, and/or water samples, such as water level meters, certain water quality monitoring meters (check with manufacturer for suggested decontamination procedure), split-spoon samplers, trowels, scoops, spoons, and pumps. Dedicated equipment is not usually decontaminated, as a general rule. Disposable equipment (e.g., bailers, rope, EnCore™ samplers, and filters) will be properly discarded after use.

Decontamination will occur before use, between sample locations, and prior to transporting off-site for re-used or non-disposable equipment. Rental equipment used in the field, which is being returned to the respective vendor, will be decontaminated prior to shipment. Conduct consistent decontamination of sampling equipment to ensure the quality of the samples collected.

Equipment decontamination is comprised of four general steps.

1. Removal of gross (visible) contamination
2. Removal of residual contamination
3. Prevention of recontamination
4. Disposal of wastes associated with the decontamination.

1.3.1 Removal of Gross Contamination

Gross contamination generally applies to soil sampling equipment that may have residue clinging to the equipment. The clinging residual soil can usually be removed by dry brushing or scraping, or in some cases using a high-pressure sprayer.

1.3.2 Removal of Residual Contamination

Removal of residual contamination generally consists of a series of sprayers, buckets, or basins used to wash and rinse the equipment. This step is usually considered the decontamination process. The decontamination process will be further outlined in **Section 1.4 and 1.5**.

1.3.3 Prevention of Recontamination

Decontamination equipment should be stored to preserve the clean status. This step will vary on the nature of the equipment. Protection measures may include covering or wrapping the equipment in plastic or aluminum foil. Only personnel wearing clean protective gloves (e.g., nitrile, latex) should handle the decontaminated equipment to prevent re-contamination.

1.3.4 Disposal of Decontamination Waste

Waste decontamination materials such as spent liquids and solids will be collected and managed in accordance with SOP-07 Investigative Derived Waste.

1.4 Small Equipment Decontamination Procedures

Small equipment described in this section generally includes soil sampling equipment (e.g., trowels, split spoon samplers, hand augers, water interface probes). Small equipment decontamination procedures will be generally conducted as follows:

1. Remove any gross contamination from the equipment.
2. Wash equipment vigorously with a bristle brush or similar in a bucket containing potable water with non-phosphate lab-grade detergent such as Liquinox®, Alconox®, or equivalent.
3. Rinse equipment thoroughly in a second bucket containing potable water (1st rinse).
4. Rinse equipment thoroughly with distilled or deionized water (2nd rinse).
5. In few instances, such as decontaminant of sensitive field instruments, it may be necessary to rinse equipment with distilled, deionized, or American Society for Testing and Materials International (ASTM) reagent grade water (3rd rinse).

6. Allow equipment to air dry in an area free from contact with contaminants. All decontaminated equipment should be dry prior to use. A decontaminated metal drying rack may be used to aid in the drying process.
7. If the decontaminated equipment is not to be used immediately after cleaning, it should be covered or wrapped to protect the equipment from contaminants.
8. Replace dirty detergent water solution and rinsate(s) between borings, sample locations, or as deemed appropriate to limit cross-contamination.

1.5 Groundwater Sampling Decontamination Procedures

Proper decontamination between monitoring wells is essential on equipment such as submersible or bladder pumps in which mechanisms of the pump come in direct contact with potentially contaminated water. This SOP does not address decontamination of re-useable bailers. The following steps shall be used for contaminated pumps:

1. Disassemble the equipment to the extent practical.
2. Wash any small mechanism of the pump assembly (e.g., check valve, tube adapter)
3. Wash the exterior of the pump casing vigorously with a bristle brush or equivalent in a bucket containing potable water with non-phosphate lab-grade detergent such as Liquinox®, Alconox®, or equivalent. A bottle brush may be used to clean the interior of pump casing.
4. If decontaminating a pump in which sample water comes in contact with internal mechanisms of the pump system, place the pump into a potable water wash container containing non-phosphate lab-grade detergent. Ensure the pump intake is fully submerged and the pump outlet is allowed to flow directly back into the wash container. Energize the pump at a very low flow rate to allow the wash water to recirculate through the pump mechanism for 2 to 5 minutes.
5. Rinse the external portion of the pump using potable water (1st rinse). Submerge the pump intake into potable water (1st rinse) and energize the pump to recirculate the rinse water through the pump mechanism.
6. Use distilled, deionized, or ASTM reagent grade water (2nd rinse) as necessary to the external and internal portions of the pump and pump mechanisms.
7. Dry off excess water with a clean paper towel or disposable cloth.
8. Reassemble the pump
9. Replace dirty detergent water solution and rinsate(s) between sample locations or as deemed appropriate to limit cross-contamination.

2.0 RECORDS

Field logbook and field documentation will be completed in accordance with SOP-04 Field Documentation. Detailed records will be maintained about decontamination procedures. Required records may include details about:

- Decontamination personnel
- Decontamination solutions types and methods
- Date and time of decontamination
- Decontamination station location
- Equipment type or identification numbers
- Decontamination solution Lot numbers
- Material Safety Data Sheets for any specialized chemicals used in the decontamination process
- Volume of decontamination materials generated (IDW log).

SOP-12 QUALITY ASSURANCE/QUALITY CONTROL SAMPLES

PURPOSE

The purpose of this SOP is to give details to the quality control (QC) measures taken to ensure the integrity of the samples collected, and to establish the guidelines for the collection of QC samples. The objective of the QC program is to ensure that quality data of known and reliable quality are developed.

Documentation of representative data is essential to site investigations; therefore, the data must be validated though the performance of QC sampling. Verification performance sampling is necessary to evaluate and identify contradictory or suspect data. The project manager must determine the QC sampling requirements. Data validation measures must be specified as part of all environmental investigations. The collection of field QC samples serves to ensure proper field procedures, but can also serve as a mechanism for the laboratory to perform their quality assurance/quality control (QA/QC) program [such as collecting sufficient sample volume to allow the laboratory to perform a matrix spike (MS)/matrix spike duplicate (MSD) on their equipment or method].

Relevant EHS Support SOPs

- SOP-04 Field Documentation
- SOP-05 Sample Management and Shipping
- SOP-09 Equipment Decontamination
- SOP-22 Soil Sampling for Chemical Analysis
- SOP-42 Groundwater Sampling for Chemical Analysis
- SOP-61 Surface Water Sampling
- SOP-62 Sediment Sampling.

Required Materials

Equipment used during collection of QC samples will be the same equipment utilized to collect the primary or parent sample, which may include a wide variety of tools depending upon the media sampled, type of sampling, and methods used.

- Field logbook and field documentation
- Site maps, site layouts, site plans
- Health and Safety Plan
- Appropriate personal protective equipment (PPE)
- Black waterproof and/or indelible ink pens
- Quality control bottle sets
- Other laboratory-supplied quality control bottle types (e.g., trip blanks, temperature blanks)
- Appropriate sample containers, sampling kits, labels, coolers and ice, Chain of Custody forms.

1.0 QUALITY ASURANCE/QUALITY CONTROL SAMPLES

In order to assess the accuracy and precision of the field methods and laboratory analytical procedures, QA/QC samples are collected during the sampling program according to the project work plan. The QA/QC samples may be labeled with QA/QC identification numbers or fictitious identification numbers (if blind submittal is desired) and are sent to the laboratory with the other samples for analyses. The frequency, types, and locations of QC (field-specific) samples will be specified in the project work plan or the site specific quality assurance project plan (QAPP). Types of quality control samples may include duplicate, trip blank, equipment blank, field blank, matrix spike and matrix spike duplicate, and temperature blank.

The QA/QC samples could be sampled on any sample media such as soil, groundwater, surface water, sediments (SOP 22, SOP-42, SOP-61, and SOP-62) or project-specific media. Field documentation (SOP-04) and sample management and shipping (SOP-05) will be used for any QA/QC samples generated during the investigation process. Naming of QA/QC samples should be provided in the project work plan or QAPP.

1.1 Duplicate Samples

Duplicate sample analysis evaluates the precision of field and laboratory components of field samples and matrix heterogeneity. Duplicate samples are two physical samples collected simultaneously from the same location under identical conditions. The project work plan will determine if the duplicate sample is homogenized. A duplicate sample should be:

- Collected for any media sampled in the field.
- Collected in accordance with the sample collection procedures identified in the project work plan.
- The work plan should identify the ratio of duplicate sample collection per primary samples; however, if the ratio is not addressed in the project work plan, duplicate samples will be collected at a rate of 1 duplicate sampled per 20 samples (5%).
- Submitted for laboratory analysis for the same or a subset of the analysis requested for the primary (or parent) sample.
- Handled and preserved in the same manner as the primary sample.

To collect duplicate samples:

1. Collect the duplicate sample concurrently with the primary (or parent) sample (e.g., water, surface water, air) or in the next consecutive sample (e.g., soil, sediment). For soil or sediment samples collected in an 18-inch long split barrel that contains three 6-inch long (brass or stainless steel) sleeves of soil, the middle sleeve is designated as the primary sample, then the next sleeve (either the top or bottom sleeve) will be the duplicate sample.
2. Record the duplicate sample name in the field logbook or field documentation, including the chain of custody.
3. Record the duplicate sample location in the field logbook or field documentation. Do not indicate the duplicate location in the chain of custody if the sample will be considered a “blind duplicate.”

1.2 Trip Blank

A trip blank sample is a sample of distilled or de-ionized water prepared in the laboratory, which accompanies the samples to and from the field, never opened, until all samples are ready for analysis. The trip blank assesses the potential for in-transit contamination of samples. The trip blank is later opened in the laboratory and analyzed along with field samples for constituent(s) of interest to ascertain whether cross-contamination has occurred during field handling, shipment, or in the laboratory.

- One trip blank (generally one or two 40-milliliter volatile organic analytical vials) should accompany each cooler containing volatile organic compound samples that are being submitted for lab analysis.
- The sample name convention should be dictated in the project work plan. If the nomenclature is not provided in the project work plan, the trip blank should be labeled with the date (e.g., TB-20140531) and/or sequence (TB-2-201405301). The addition of the date streamlines identification of the potentially affected samples in case cross-contamination is suspected during container or sample shipment.
- The trip blank is recorded on the chain of custody, at a minimum, and can be included in the field logbook or field documentation.

1.3 Equipment Blank

The collection of an equipment blank evaluates field decontamination procedures. To collect an equipment blank:

1. Decontaminate the reusable sample equipment (e.g., pump, split spoon sampler, bailer) in accordance with the project work plan or SOP-09 Field Decontamination. If equipment blank is being collected off a supplied material (e.g., tubing, disposable bailer), the supplied material will be unused (new).
2. Run "clean" (e.g., distilled/de-ionized/demonstrated analyte free) water through or down the equipment and into the appropriately labeled sample set.
3. The equipment blank sample set is identical to the sample set being analyzed. (For instance, if the project requires analysis for volatile organic compounds (VOCs) and semi-volatile organic compounds (SVOCs), the equipment blank sample set will include a bottle set and analysis for VOCs and SVOCs.)
4. In some situations, one equipment blank will be required for each type of sampling procedure (e.g., bailer, soil sampling equipment, etc.).
5. Record the equipment blank sample name in the field logbook or field documentation, including the chain of custody.
6. Record the equipment blank sample location, type of equipment, etc. in the field logbook or field documentation.
7. The equipment blank can be collected one per equipment type, one per borehole, one per day, or as outlined in the project work plan or QAPP.

1.4 FIELD BLANK

A field blank might be necessary where ambient air quality is poor. Taking this field blank would determine if airborne contaminants interfere with constituent identification or quantification.

- The field blank will be collected as outlined in the project work plan or QAPP.
- The field blank sample set is identical to the sample set being analyzed. (For instance, if the project work plan requires analysis for VOCs and SVOCs, the equipment blank sample set will include a bottle set and analysis for VOCs and SVOCs).

To collect a field blank:

1. The "clean" (e.g., distilled/de-ionized/demonstrated analyte free) water container will remain unopened until collection of the field blank sample occurs at the designated location.
2. Fill the sample bottle set with "clean" water. Pour clean water directly in to the sample bottles at the designated sample location. The clean water is exposed to the air as it travels from the “clean” water container to the sample container.

3. Record the field blank sample name in the field logbook or field documentation, including the chain of custody.
4. Record the field blank sample location in the field logbook or field documentation.

1.5 Matrix Spike and Matrix Spike Duplicates

An extra volume of sample media may be collected during the sampling event for performance of MS/MSD analyses by the laboratory to assess laboratory accuracy, precision, and matrix interference. The laboratory adds spikes of compounds (e.g., standard compound, test substance, etc.) to the additional sample volume to determine if the matrix is interfering with constituent identification or quantification. In addition, MS/MSD samples perform as a check for systematic errors and lack of sensitivity of analytical equipment.

Results of the laboratory analyses are compared with the results of the primary sample and the known concentrations of the spike compounds. The percent recovery and relative percent difference are calculated, and results are used to evaluate the precision and accuracy of the analytical method for various labeled "extra volume samples for MS/MSD." The MS/MSD sample should be:

- Collected for any media sampled in the field.
- Collected in accordance with the sample collection procedures identified in the project work plan.
- The work plan should identify the ratio of MS/MSD sample collection per primary samples; however, if the ratio is not addressed in the project work plan, MS/MSD samples will be collected at a rate of 1 MS/MSD sampled per 20 samples (5%).
- Submitted for laboratory analysis for the same or a subset of the analysis requested for the primary (or parent) sample.
- Handled and preserved in the same manner as the primary sample.

To collect a MS/MSD sample:

1. Collect the duplicate sample concurrently with the primary (or parent) sample (e.g., water, surface water, air) or in the next consecutive sample (e.g., soil, sediment). For soil or sediment samples collected in an 18-inch long split barrel that contains three 6-inch long (brass or stainless steel) sleeves of soil, the middle sleeve is designated as the primary sample, and the top and bottom sleeve will be the designated as the MS/MSD sample.
2. Generally, two to three times the volume of primary sample is required in an MS/MSD sample (or, the sample is collected in triplicate).
3. Identify the MS/MSD is on the chain of custody by indicating the extra volume or number of sample jars, and include a sample identifier or note to indicate the sample is an MS/MSD sample.
4. Record the MS/MSD sample name in the field logbook or field documentation, including the chain of custody.

1.6 Temperature Blank

A temperature blank is a vial of water that accompanies a sample cooler that will be opened and tested upon arrival at the laboratory to ensure the temperature of the contents of the sampling shipping container are within the required 4 degrees (°) Celsius ± 2°. Temperature blanks are generally included for chemical analysis samples that have a temperature requirement.

- The temperature blank requires little attention except to ensure one is in each cooler containing ice.
- Check with the laboratory if a temperature blank is not included in the cooler shipped to the site. A few laboratories are moving to temperature sensors (e.g., infrared sensors) to monitor cooler temperature upon arrival to the laboratory.
- Temperature blanks are generally required for those samples required to be preserved to 4° C ± 2°.
- No documentation is required on temperature blanks by the field staff.

2.0 RECORDS

Field notes will be kept in a bound field logbook or approved field documentation following the format specified in SOP-04 Field Documentation. Detailed records will be maintained during sampling activities, particularly with respect to the location of QA/QC samples. The following information should be recorded:

- Location of QA/QC sample
- QA/QC sample name
- Type of QA/QC sample
- Sample analysis
- If needed, equipment type the QC sample was collected from
- "Clean" water type (laboratory supplied, grocery store)
- If applicable, weather conditions (e.g., air quality for field blanks).

ORGANIC VAPOR MONITORING IN SOIL

PURPOSE

This SOP provides general procedures for monitoring for the presence of organic vapor in soil during a field investigation. Such monitoring is performed to assist in field investigations by screening soils for the potential presence of volatile organic compounds (VOCs), and may be used as a screening tool for identifying soil samples that may require laboratory analysis.

Several monitoring options for field screening are available and include a photo-ionization detector (PID), flame-ionization detector (FID), activated charcoal tubes, and detector tubes (e.g., Draeger, Katagawa). This SOP will focus on the use of a PID to monitor organic vapor.

Relevant EHS Support SOPs

- SOP-04 Field Documentation
- SOP-08 Field Equipment Operation and Calibration
- SOP-24 to SOP-29 Subsurface Drilling Methods and Field Classification of Soil and Rock.

Attachments

- Attachment A Ionization Energy for Common VOC Contaminants

Required Materials

- Air monitoring instrumentation (e.g., PID) and supplies
- Field logbook and field documentation
- Site maps, site layouts, site plans
- Health and Safety Plan
- Appropriate personal protective equipment (PPE)
- Black waterproof and/or indelible ink pens
- Charging apparatus
- Calibration standards
- Plastic Baggies/glass jars and foil.

1.0 ORGANIC VAPOR MONITORING PROCEDURES

The primary objective of field screening of soil samples is to obtain a qualitative understanding of the distribution of VOCs in soil. A PID is generally used as a screening tool during subsurface investigations. A PID operates as follows:

- A pump intakes air/gas through the PID probe tip (with filter) attached to the air intake.
- The air/gas is passed along a lamp that has been factory-calibrated to a known standard.
- Ultra-violet light ionizes the gas as it passes across the UV window **(Figure 1).**
- The gas molecules absorb UV energy and emit charged particles that produce a current measured by sensor electrodes.
- The measured current is amplified and converted to a concentration and displayed on the monitor output screen, typically as parts per million.

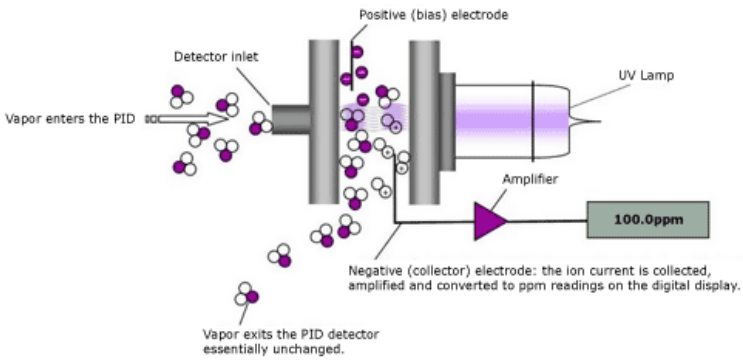

Figure 1 Example of Ultra Violet Light Process

1.1 PID Selection, Operations, and Preparation

Selection of the PID is usually based on the project chemical of interest and the ionization potential (IP) of that chemical by the UV lamp. PIDs can be selected with lamps that have outputs of 9.5, 10.6, or 11.7 electron Volts (eV). In general, lower eV lamps provide better resolution (more accuracy), while higher eV lamps provide for detection of a broader spectrum of VOCs. Generally, the 10.6 eV lamp is preferable as the lamp provides higher resolution (more ionization/better accuracy) and is more durable and longer lasting than the 11.7 eV lamp and as such may be more reliable for field operation.

The project work plan should include the PID lamp size required for the project. If the project work plan does not specify the lamp size, discuss the data quality objective with the Project Manager, or determine which lamp size is appropriate for the field event as follows:

1. Identify the chemical of interest for the site.
2. Compare the chemical of interest to the ionization potential (ionization energy). Ionization energies for typical VOCs are included in **Attachment A**.
3. Find the chemical of interest and look under the column header IP (eV). If a chemical IP is lower than 10.6 eV, then a PID with a lamp of 10.6 eV is appropriate. If a chemical IP is higher than 10.6 eV by lower than 11.7 eV, a PID with a lamp of 11.7 eV is appropriate. If a known chemical of interest has an IP higher than 11.7 eV, a PID may not be a suitable method of monitoring VOCs.

4. If a broad suite of chemicals is anticipated, the lamp should be selected based on the chemical (in that suite) having the highest ionization potential.
5. PIDs can be used to measure concentrations that range from low parts per billion (ppb) to 10,000 parts per million (ppm). The instrument should be selected based on the project data objectives. Generally, the instrument range should encompass any health and safety trigger and/or screening level monitoring requirements.
6. A discussion about the PID lamp can be conducted with the equipment rental technician, but the advice should be considered and then verified.
7. Once the lamp energy has been determined, procure instrument with all necessary equipment for operation (e.g., probe, filters, pump and reading unit, calibration gas (e.g., isobutylene), charging cable, battery charger, operations manual, carrying case, etc.).
8. Assemble and calibrate the PID in general accordance with the procedures outlined in SOP-08 Field Equipment Operation and Calibration. Calibration, operation, and routine maintenance of a PID are provided as an Attachment to SOP-08. Review SOP-04 Field Documentation for additional details regarding completing and recording field calibrations).

1.2 PID Instrument Cautions

- The PID output (measurement) represents a total VOC concentration and does not identify or distinguish individual VOCs detected, or account for compounds outside the ionization range. Though PID measurements may be correlated to a concentration for an individual chemical based on the calibration gas (typically isobutylene), chemical-types or concentration should not be determined by use solely on PID output readings.
- Under no circumstance should the PID tip be immersed in water.
- A 2 to 3 second delay is expected from the time the probe tip is inserted in the monitoring location to output to the PID monitor screen. The response delay should be taken into account while monitoring.
- It may be required to allow for some time to pass between monitoring of samples.
- In general, samples used for field screening and submittal to a laboratory are collected as separate samples. In the event, the field screening sample is planned for submittal for laboratory analysis, decontamination of the PID and PID probe will be required to prevent cross contamination.

1.3 Soil Monitoring for Organic Compounds

There are generally two methods of screening soils for the presence of VOCs – ambient air emission monitoring (field scanning) and headspace monitoring. PID monitoring of soils can be conducted on:

- Subsurface soil samples (from discrete intervals or composite samples of core – see SOP-21 Soil Sample Collection Methods).
- Drill cuttings
- Excavated soils
- Stockpile soils.

1.3.1 Ambient Air Emission Monitoring (Field Scanning)

Ambient emission monitoring of soils from excavations, stockpiles, drill cuttings or soil cores are conducted as follows:

1. Record an ambient air background reading to screen for air-borne VOCs. The ambient air background reading is collected from an area that is not influenced by site conditions or constituents, usually regarded as a “clean” zone.

2. For monitoring of disturbed soil samples (i.e., soil samples from excavations, stockpiles, hand augers, or drill cuttings):
    a. Place the probe tip near the soil or in a void in the soil. Try to inhibit winds for interfering with the reading.
    b. Hold the probe near the sample location for 3 to 5 seconds to allow for PID to analyze the air/gas.
    c. Record the highest reading for that soil sample.
3. For monitoring of undisturbed soil samples (i.e., soils collected in sample liners, split spoon samplers, polyethylene liner, etc.):
    a. Retrieve and open the soil sampler. (Work in a timely manner to record recovery and/or vapor headspace sample collected, as needed.)
    b. Monitor for ambient air by either
    c. Very slowly running the PID probe just above the soil or along a “V” cut into the soil and recording the reading for that sample/sample depth; or,
    d. Creating a void in the soil at a determined sample depth interval (e.g., every 0.5 meters, 1 foot) and inserting the probe tip into the void.
    e. Cover the void/probe with your hand to prevent wind from interfering with the reading and allow the instrument to measure the air/gas.
    f. Record the highest PID reading for that soil sample.

1.3.2 Headspace Measurement

Two screening methods are described in the procedure below: the standard soil jar headspace method, and a modified soil headspace method, which utilizes a plastic sample baggie in place of a soil jar. Both methods are similar except for the choice of the sample container. Use of one method over the other may be regulated or outlined in the project work plan. To monitor for headspace in soil:

1. Retrieve and open soil sampler, if appropriate.
2. Collect the soil sample directly from the source (e.g., stockpile, excavation, soil sampler).
3. Half fill a clean glass jar or a clean plastic baggie with the sample to be analyzed. Quickly cover the open top of the glass jar with one or two sheets of clean aluminum foil and subsequently apply screw cap to seal the jar tightly. A sampling plastic baggie shall be either zip locked or "whirled" closed quickly to minimize loss of VOCs.
4. Label the sample container as necessary to track the sample.
5. Allow headspace in the sample container to develop for 5 to 15 minutes. In warmer air temperatures, less time may be required. For temperatures below 32°F (0°C) headspace development should be within a heated vehicle or building.
6. Avoid placing samples in direct sunlight to minimize condensate build-up, which may adversely affect the PID.
7. Break up clumps and/or vigorously shake the sample to release potential VOCs from the soil sample. Take care not to cause puncture the plastic baggie.
8. Subsequent to headspace development, remove screw lid/expose foil seal from the sampling jar, if applicable. Quickly puncture the foil seal with the instrument sample probe or open the corner of the plastic baggie.
9. Insert the probe tip into the ambient air space in the jar or baggie.
10. Allow the PID to process the air/gas over a period of 3 to 5 seconds.
11. Record the PID measurement in the field logbook or field documentation.

1.4 PID Limitations and Corrective Actions

- PIDs only measure compounds with IPs near or below the eV of the UV lamp used. Confirm the chemicals to be monitored are detected within the IP of the instrument lamp.
- PID readings are non-specific total organic analyzers. Measured concentrations are not chemical specific and only include those compounds within the ionization range.
- Chemicals with very low potential (e.g., methane, ethane) or very high potential (e.g., carbon tetrachloride, hydrogen cyanide) may be outside the detection range of the PID, and alternative monitoring may be required.
- PIDs are highly sensitive to moisture and humidity, have slightly reduced response as humidity increases, and can have false-positive humidity response at very high humidities.
  - Indications of interference may include needle dropping below zero or slow constant climb in read-out.
  - Erratic readings/fluctuations may be indicative of moisture/particulate interference
  - False-positive effect can be avoided by maintaining a clean sensor
  - Units should not be exposed to precipitation (keep covered/sealed in rain conditions)
  - If it is determined that moisture is adversely affecting readings, it may be necessary to use or obtain a second PID.
- Minimize exposure to wind, if possible, as it may interfere with readings.
- Monitoring should be made away from vehicles, fuel-powered equipment (generators, etc.), and other non-sample VOC sources.
- PIDs are sensitive to cold weather. Be sure to allow the PID to acclimate to the environment in which it will be used, and allow the unit to warm up before calibration and operations to ensure most accurate readings. The warming up period enhances performance by:
  - Allowing for easier monitoring of the gas
  - Reducing potential condensation in the unit
  - Allowing the lamp to achieve full power
  - Purging potential residual VOC in unit.
- Store the PID in an environment as near the climate in which is will be used. Avoid storing in cold temperatures (i.e., store indoors).
- Store the PID in a dry environment.
- Ensure a filter is attached to the probe tip prior to use. The filter removes soil particles or dust from entering the PID instrument. The filter can also reduce moisture content by being absorbed by the filter. Replace the filter as necessary or when the filter becomes soiled or wet.
- If multiple readings are zero, periodically check probe is working properly using calibration standard or low VOC emission test material.
- Avoid ‘saturating’ probe with prolonged measuring of high concentration samples or testing operation with high VOC emission material (e.g., Sharpie® pens, etc.). It may adversely affect the lamp.
- Keep the probe clean by wiping with clean, slightly damp disposable towel to remove any visible dirt/condensate. If additional cleaning of the probe is required, the probe should be removed from the instrument, cleaned, and allowed to dry thoroughly.

2.0 RECORDS

Field notes will be kept in a bound field logbook or approved field documentation following the format specified in SOP-04 Field Documentation. The following information should be recorded when conducting PID monitoring:

- Sample location and/or identification
- Sample depth, if applicable
- Type of screening (i.e., field scan or headspace)
- PID results
- Weather observations (e.g.,, wind speed, sunny or cloudy sky)
- Monitoring equipment used
- Any unusual observations.

ATTACHMENT A IONIZATION ENERGY FOR COMMON VOC CONTAMINANTS

(excerpt table from Rae Systems Technical Note 106)

Compound Name	Synonym/Abbreviation	CAS No.	Formula	9.8	C	10.6	C	11.7	C	IE (eV)	TWA
Acetaldehyde		75-07-0	C_2H_4O	NR	+	6	+	3.3	+	10.23	C25
Acetic acid	Ethanoic Acid	64-19-7	$C_2H_4O_2$	NR	+	22	+	2.6	+	10.66	10
Acetic anhydride	Ethanoic Acid Anhydride	108-24-7	$C_4H_6O_3$	NR	+	6.1	+	2.0	+	10.14	5
Acetone	2-Propanone	67-64-1	C_3H_6O	1.2	+	1.1	+	1.4	+	9.71	500
Acetone cyanohydrin	2-Hydroxyisobutyronitrile	75-86-5	C_4H_7NO					4	+	11.1	C5
Acetonitrile	Methyl cyanide, Cyanomethane	75-05-8	C_2H_3N					100		12.19	40
Acetylene	Ethyne	74-86-2	C_2H_2					2.1	+	11.40	ne
Acrolein	Propenal	107-02-8	C_3H_4O	42	+	3.9	+	1.4	+	10.10	0.1
Acrylic acid	Propenoic Acid	79-10-7	$C_3H_4O_2$			12	+	2.0	+	10.60	2
Acrylonitrile	Propenenitrile	107-13-1	C_3H_3N			NR	+	1.2	+	10.91	2
Allyl alcohol		107-18-6	C_3H_6O	4.5	+	2.4	+	1.6	+	9.67	2
Allyl chloride	3-Chloropropene	107-05-1	C_3H_5Cl			4.3		0.7		9.9	1
Ammonia		7664-41-7	H_3N	NR	+	9.7	+	5.7	+	10.16	25
Amyl acetate	mix of n-Pentyl acetate & 2-Methylbutyl acetate	628-63-7	$C_7H_{14}O_2$	11	+	2.3	+	0.95	+	<9.9	100
Amyl alcohol	1-Pentanol	75-85-4	$C_5H_{12}O$			5		1.6		10.00	ne
Aniline	Aminobenzene	62-53-3	C_7H_7N	0.50	+	0.48	+	0.47	+	7.72	2
Anisole	Methoxybenzene	100-66-3	C_7H_8O	0.89	+	0.58	+	0.56	+	8.21	ne
Arsine	Arsenic trihydride	7784-42-1	AsH_3			1.9	+			9.89	0.05
Benzaldehyde		100-52-7	C_7H_6O					1		9.49	ne
Benzenamine, N-methyl-	N-Methylphenylamine	100-61-8	C_7H_9N			0.7				7.53	
Benzene		71-43-2	C_6H_6	0.55	+	0.53	+	0.6	+	9.25	0.5
Benzonitrile	Cyanobenzene	100-47-0	C_7H_5N			1.6				9.62	ne
Benzyl alcohol	α-Hydroxytoluene, Hydroxymethylbenzene, Benzenemethanol	100-51-6	C_7H_8O	1.4	+	1.1	+	0.9	+	8.26	ne
Benzyl chloride	α-Chlorotoluene, Chloromethylbenzene	100-44-7	C_7H_7Cl	0.7	+	0.6	+	0.5	+	9.14	1
Benzyl formate	Formic acid benzyl ester	104-57-4	$C_8H_8O_2$	0.9	+	0.73	+	0.66	+		ne
Boron trifluoride		7637-07-2	BF_3	NR		NR		NR		15.5	C1
Bromine		7726-95-6	Br_2	NR	+	1.30	+	0.74	+	10.51	0.1
Bromobenzene		108-86-1	C_6H_5Br			0.6		0.5		8.98	ne
2-Bromoethyl methyl ether		6482-24-2	C_3H_7OBr			0.84	+			~10	ne
Bromoform	Tribromomethane	75-25-2	$CHBr_3$	NR	+	2.5	+	0.5	+	10.48	0.5
Bromopropane,1-	n-Propyl bromide	106-94-5	C_3H_7Br	150	+	1.5	+	0.6	+	10.18	ne
Butadiene	1,3-Butadiene, Vinyl ethylene	106-99-0	C_4H_6	0.8		0.85	+	1.1		9.07	2
Butadiene diepoxide, 1,3-	1,2,3,4-Diepoxybutane	298-18-0	$C_4H_6O_2$	25	+	3.5	+	1.2		~10	ne
Butanal	1-Butanal	123-72-8	C_4H_8O			1.8				9.84	
Butane		106-97-8	C_4H_{10}			67	+	1.2		10.53	800
Butanol, 1-	Butyl alcohol, n-Butanol	71-36-3	$C_4H_{10}O$	70	+	4.7	+	1.4	+	9.99	20
Butanol, t-	tert-Butanol, t-Butyl alcohol	75-65-0	$C_4H_{10}O$	6.9	+	2.9	+			9.90	100
Butene, 1-	1-Butylene	106-98-9	C_4H_8			0.9				9.58	ne
Butoxyethanol, 2-	Butyl Cellosolve, Ethylene glycol monobutyl ether	111-76-2	$C_6H_{14}O_2$	1.8	+	1.2	+	0.6	+	<10	25
Butoxyethanol acetate	Ethanol, 2-(2-butoxyethoxy)-, acetate	124-17-4	$C_{10}H_{20}O_4$			5.6				≤10.6	
Butoxyethoxyethanol	2-(2-Butoxyethoxy)ethanol	112-34-5	$C_8H_{18}O_3$			4.6				≤10.6	
Butyl acetate, n-		123-86-4	$C_6H_{12}O_2$			2.6	+			10	150
Butyl acrylate, n-	Butyl 2-propenoate, Acrylic acid butyl ester	141-32-2	$C_7H_{12}O_2$			1.6	+	0.6	+		10
Butylamine, n-		109-73-9	$C_4H_{11}N$	1.1	+	1.1	+	0.7	+	8.71	C5
Butyl cellosolve	see 2-Butoxyethanol	111-76-2									
Butyl hydroperoxide, t-		75-91-2	$C_4H_{10}O_2$	2.0	+	1.6	+			<10	1
Butyl mercaptan	1-Butanethiol	109-79-5	$C_4H_{10}S$	0.55	+	0.52	+			9.14	0.5
Carbon disulfide		75-15-0	CS_2	4	+	1.2	+	0.44		10.07	10
Carbon tetrachloride	Tetrachloromethane	56-23-5	CCl_4	NR	+	NR	+	1.7	+	11.47	5
Carbonyl sulfide	Carbon oxysulfide	463-58-1	COS							11.18	

Cellosolve see 2-Ethoxyethanol
CFC-14 see Tetrafluoromethane
CFC-113 see 1,1,2-Trichloro-1,2,2-trifluoroethane

RAE Systems Inc.
3775 N. First St., San Jose, CA 95134-1708 USA
Phone: +1.888.723.8823
Email: raesales@raesystems.com
Web Site: www.raesystems.com

Compound Name	Synonym/Abbreviation	CAS No.	Formula	9.8	C	10.6	C	11.7	C	IE (eV)	TWA
Chlorine		7782-50-5	Cl_2					1.0	+	11.48	0.5
Chlorine dioxide		10049-04-4	ClO_2	NR	+	NR	+	NR	+	10.57	0.1
Chlorobenzene	Monochlorobenzene	108-90-7	C_6H_5Cl	0.44	+	0.40	+	0.39	+	9.06	10
Chlorobenzotrifluoride, 4-	PCBTF, OXSOL 100 p-Chlorobenzotrifluoride	98-56-6	$C_7H_4ClF_3$	0.74	+	0.63	+	0.55	+	<9.6	25
Chloro-1,3-butadiene, 2-	Chloroprene	126-99-8	C_4H_5Cl			3					10
Chloro-1,1-difluoroethane, 1-	HCFC-142B, R-142B	75-68-3	$C_2H_3ClF_2$	NR		NR		NR		12.0	ne
Chlorodifluoromethane	HCFC-22, R-22	75-45-6	$CHClF_2$	NR		NR		NR		12.2	1000
Chloroethane	Ethyl chloride	75-00-3	C_2H_5Cl	NR	+	NR	+	1.1	+	10.97	100
Chloroethanol	Ethylene chlrohydrin	107-07-3	C_2H_5ClO					2.9		10.52	C1
Chloroethyl ether, 2-	bis(2-chloroethyl) ether	111-44-4	$C_4H_8Cl_2O$	8.6	+	3.0	+				5
Chloroethyl methyl ether, 2-	Methyl 2-chloroethyl ether	627-42-9	C_3H_7ClO			3					ne
Chloroform	Trichloromethane	67-66-3	$CHCl_3$	NR	+	NR	+	3.5	+	11.37	10
Chloro-2-methylpropene, 3-	Methallyl chloride, Isobutenyl chloride	563-47-3	C_4H_7Cl	1.4	+	1.2	+	0.63	+	9.76	ne
Chloropicrin		76-06-2	CCl_3NO_2	NR	+	~400	+	7	+	?	0.1
Chlorotoluene, o-	o-Chloromethylbenzene	95-49-8	C_7H_7Cl			0.5		0.6		8.83	50
Chlorotoluene, p-	p-Chloromethylbenzene	106-43-4	C_7H_7Cl					0.6		8.69	ne
Chlorotrifluoroethene	CTFE, Chlorotrifluoroethylene Genetron 1113	79-38-9	C_2ClF_3	6.7	+	3.9	+	1.2	+	9.76	5
Chlorotrimethylsilane		75-77-4	C_3H_9ClSi	NR		NR		0.82	+	10.83	ne
Cresol, m-	m-Hydroxytoluene	108-39-4	C_7H_8O	0.57	+	0.50	+	0.57	+	8.29	5
Cresol, o-	o-Hydroxytoluene	95-48-7	C_7H_8O			1.0				8.50	
Cresol, p-	p-Hydroxytoluene	106-44-5	C_7H_8O			1.4				8.35	
Crotonaldehyde	*trans*-2-Butenal	123-73-9 4170-30-3	C_4H_6O	1.5	+	1.1	+	1.0	+	9.73	2
Cumene	Isopropylbenzene	98-82-8	C_9H_{12}	0.58	+	0.54	+	0.4	+	8.73	50
Cyanogen bromide		506-68-3	CNBr	NR		NR		NR		11.84	ne
Cyanogen chloride		506-77-4	CNCl	NR		NR		NR		12.34	C0.3
Cyclohexane		110-82-7	C_6H_{12}	3.3	+	1.4	+	0.64	+	9.86	300
Cyclohexanol	Cyclohexyl alcohol	108-93-0	$C_6H_{12}O$	1.5	+	0.9	+	1.1	+	9.75	50
Cyclohexanone		108-94-1	$C_6H_{10}O$	1.0	+	0.9	+	0.7	+	9.14	25
Cyclohexene		110-83-8	C_6H_{10}			0.8	+			8.95	300
Cyclohexylamine		108-91-8	$C_6H_{13}N$			1.2				8.62	10
Cyclopentane 85% 2,2-dimethylbutane 15%		287-92-3	C_5H_{10}	NR	+	15	+	1.1		10.33	600
Cyclopropylamine	Aminocyclpropane	765-30-0	C_3H_7N	1.1	+	0.9	+	0.9	+		ne
Decamethylcyclopentasiloxane		541-02-6	$C_{10}H_{30}O_5Si_5$	0.16	+	0.13	+	0.12	+		ne
Decamethyltetrasiloxane		141-62-8	$C_{10}H_{30}O_3Si_4$	0.17	+	0.13	+	0.12	+	<10.2	ne
Decane		124-18-5	$C_{10}H_{22}$	4.0	+	1.4	+	0.35	+	9.65	ne
Diacetone alcohol	4-Methyl-4-hydroxy-2-pentanone	123-42-2	$C_6H_{12}O_2$			0.7					50
Dibromochloromethane	Chlorodibromomethane	124-48-1	$CHBr_2Cl$	NR	+	5.3	+	0.7	+	10.59	ne
Dibromo-3-chloropropane, 1,2-	DBCP	96-12-8	$C_3H_5Br_2Cl$	NR	+	1.7	+	0.43	+		0.001
Dibromoethane, 1,2-	EDB, Ethylene dibromide, Ethylene bromide	106-93-4	$C_2H_4Br_2$	NR	+	1.7	+	0.6	+	10.37	ne
Dichlorobenzene, o-	1,2-Dichlorobenzene	95-50-1	$C_6H_4Cl_2$	0.54	+	0.47	+	0.38	+	9.08	25
Dichlorodifluoromethane	CFC-12	75-71-8	CCl_2F_2			NR	+	NR	+	11.75	1000
Dichlorodimethylsilane		75-78-5	$C_2H_6Cl_2Si$	NR		NR		1.1	+	>10.7	ne
Dichloroethane, 1,2-	EDC, 1,2-DCA, Ethylene dichloride	107-06-2	$C_2H_4Cl_2$			NR	+	0.6	+	11.04	10
Dichloroethene, 1,1-	1,1-DCE, Vinylidene chloride	75-35-4	$C_2H_2Cl_2$			0.82	+	0.8	+	9.79	5
Dichloroethene, c-1,2-	*c*-1,2-DCE, *cis*-Dichloroethylene	156-59-2	$C_2H_2Cl_2$			0.8				9.66	200
Dichloroethene, t-1,2-	*t*-1,2-DCE, *trans*-Dichloroethylene	156-60-5	$C_2H_2Cl_2$			0.45	+	0.34	+	9.65	200
Dichloro-1-fluoroethane, 1,1-	R-141B	1717-00-6	$C_2H_3Cl_2F$	NR	+	NR	+	2.0	+		ne
Dichloromethane	see Methylene chloride										

RAE Systems Inc.
3775 N. First St., San Jose, CA 95134-1708 USA
Phone: +1.888.723.8823
Email: raesales@raesystems.com
Web Site: www.raesystems.com

Compound Name	Synonym/Abbreviation	CAS No.	Formula	9.8	C	10.6	C	11.7	C	IE (eV)	TWA
Dichloropentafluoropropane	AK-225, mix of ~45% 3,3-dichloro-1,1,1,2,2-pentafluoro-propane (HCFC-225ca) & ~55% 1,3-Dichloro-1,1,2,2,3-pentafluoropropane (HCFC-225cb)	442-56-0 507-55-1	$C_3HCl_2F_5$	NR	+	NR	+	25	+		ne
Dichloropropane, 1,2-		78-87-5	$C_3H_6Cl_2$					0.7		10.87	75
Dichloro-1-propene, 1,3-		542-75-6	$C_3H_4C_{12}$	1.3	+	0.96	+			<10	1
Dichloro-1-propene, 2,3-		78-88-6	$C_3H_4Cl_2$	1.9	+	1.3	+	0.7	+	<10	ne
Dichloro-1,1,1-trifluoroethane, 2,2-	R-123	306-83-2	$C_2HCl_2F_3$	NR	+	NR	+	10.1	+	11.5	ne
Dichloro-2,4,6-trifluoropyridine, 3,5-	DCTFP	1737-93-5	$C_5Cl_2F_3N$	1.1	+	0.9	+	0.8	+		ne
Dichlorvos *	Vapona; O,O-dimethyl O-dichlorovinyl phosphate	62-73-7	$C_4H_7Cl_2O_4P$			0.9	+			<9.4	0.1
Dicyclopentadiene	DCPD, Cyclopentadiene dimer	77-73-6	$C_{10}H_{12}$	0.57	+	0.48	+	0.43	+	8.8	5
Diesel Fuel		68334-30-5	m.w. 226			0.9	+				11
Diesel Fuel #2 (Automotive)		68334-30-5	m.w. 216	1.3		0.7	+	0.4	+		11
Diethylamine		109-89-7	$C_4H_{11}N$			1	+			8.01	5
Diethylaminopropylamine, 3-		104-78-9	$C_7H_{18}N_2$			1.3					ne
Diethylbenzene	See Dowtherm J										
Diethylmaleate		141-05-9	$C_8H_{12}O_4$			4					ne
Diethyl sulfide	see Ethyl sulfide										
Diglyme	See Methoxyethyl ether	111-96-6	$C_6H_{14}O_3$								
Diisobutyl ketone	DIBK, 2,2-dimethyl-4-heptanone	108-83-8	$C_9H_{18}O$	0.71	+	0.61	+	0.35	+	9.04	25
Diisopropylamine		108-18-9	$C_6H_{15}N$	0.84	+	0.74	+	0.5	+	7.73	5
Diketene	Ketene dimer	674-82-8	$C_4H_4O_2$	2.6	+	2.0	+	1.4	+	9.6	0.5
Dimethylacetamide, N,N-	DMA	127-19-5	C_4H_9NO	0.87	+	0.8	+	0.8	+	8.81	10
Dimethylamine		124-40-3	C_2H_7N			1.5				8.23	5
Dimethyl carbonate	Carbonic acid dimethyl ester	616-38-6	$C_3H_6O_3$	NR	+	~70	+	1.7	+	~10.5	ne
Dimethyl disulfide	DMDS	624-92-0	$C_2H_6S_2$	0.2	+	0.20	+	0.21	+	7.4	ne
Dimethyl ether	see Methyl ether										
Dimethylethylamine	DMEA	598-56-1	$C_4H_{11}N$	1.1	+	1.0	+	0.9	+	7.74	~3
Dimethylformamide, N,N-	DMF	68-12-2	C_3H_7NO	0.7	+	0.7	+	0.8	+	9.13	10
Dimethylhydrazine, 1,1-	UDMH	57-14-7	$C_2H_8N_2$			0.8	+	0.8	+	7.28	0.01
Dimethyl methylphosphonate	DMMP, methyl phosphonic acid dimethyl ester	756-79-6	$C_3H_9O_3P$	NR	+	4.3	+	0.74	+	10.0	ne
Dimethyl sulfate		77-78-1	$C_2H_6O_4S$	~23		~20	+	2.3	+		0.1
Dimethyl sulfide	see Methyl sulfide										
Dimethyl sulfoxide	DMSO, Methyl sulfoxide	67-68-5	C_2H_6OS			1.4	+			9.10	ne
Dioxane, 1,4-		123-91-1	$C_4H_8O_2$			1.3				9.19	25
Dioxolane, 1,3-	Ethylene glycol formal	646-06-0	$C_3H_6O_2$	4.0	+	2.3	+	1.6	+	9.9	20
Dowtherm A see Therminol® *											
Dowtherm J (97% Diethylbenzene) *		25340-17-4	$C_{10}H_{14}$			0.5					
DS-108F Wipe Solvent	Ethyl lactate/Isopar H/ Propoxypropanol ~7:2:1	97-64-3 64742-48-9 1569-01-3	m.w. 118	3.3	+	1.6	+	0.7	+		ne
Epichlorohydrin	ECH Chloromethyloxirane, 1-chloro2,3-epoxypropane	106-89-8	C_2H_5ClO	~200	+	8.5	+	1.4	+	10.2	0.5
Ethane		74-84-0	C_2H_6			NR	+	15	+	11.52	ne
Ethanol	Ethyl alcohol	64-17-5	C_2H_6O			10	+	3.1	+	10.47	1000
Ethanolamine *	MEA, Monoethanolamine	141-43-5	C_2H_7NO	5.6	+	1.6	+			8.96	3
Ethene	Ethylene	74-85-1	C_2H_4			9	+	4.5	+	10.51	ne
Ethoxyethanol, 2-	Ethyl cellosolve	110-80-5	$C_4H_{10}O_2$			1.3				9.6	5
Ethyl acetate		141-78-6	$C_4H_8O_2$			4.6	+	3.5		10.01	400
Ethyl acetoacetate		141-97-9	$C_6H_{10}O_3$	1.4	+	1.2	+	1.0	+	<10	ne
Ethyl acrylate		140-88-5	$C_5H_8O_2$			2.4	+	1.0	+	<10.3	5
Ethylamine		75-04-7	C_2H_7N			0.8				8.86	5

RAE Systems Inc.
3775 N. First St., San Jose, CA 95134-1708 USA
Phone: +1.888.723.8823
Email: raesales@raesystems.com
Web Site: www.raesystems.com

Compound Name	Synonym/Abbreviation	CAS No.	Formula	9.8	C	10.6	C	11.7	C	IE (Ev)	TWA
Ethylbenzene		100-41-4	C_8H_{10}	0.52	+	0.52	+	0.51	+	8.77	100
Ethyl caprylate	Ethyl octanoate	106-32-1	$C_{10}H_{20}O_2$		+	0.52	+	0.51	+		
Ethylenediamine	1,2-Ethanediamine; 1,2-Diaminoethane	107-15-3	$C_2H_8N_2$	0.9	+	0.8	+	1.0	+	8.6	10
Ethylene glycol *	1,2-Ethanediol	107-21-1	$C_2H_6O_2$			16	+	6	+	10.16	C100
Ethylene glycol, Acrylate	2-hydroxyethyl Acrylate	818-61-1	$C_5H_8O_3$			8.2				≤10.6	
Ethylene glycol dimethyl ether	1,2-Dimethoxyethane, Monoglyme	110-71-4	$C_4H_{10}O_2$	1.1		0.86		0.7		9.2	ne
Ethylene glycol monobutyl ether acetate	2-Butoxyethyl acetate	112-07-2	$C_8H_{16}O_3$			1.3				≤10.6	
Ethylene glycol, monothio	mercapto-2-ethanol	60-24-2	C_2H_6OS			1.5				9.65	
Ethylene oxide	Oxirane, Epoxyethane	75-21-8	C_2H_4O			13	+	3.5	+	10.57	1
Ethyl ether	Diethyl ether	60-29-7	$C_4H_{10}O$			1.1	+	1.7		9.51	400
Ethyl 3-ethoxypropionate	EEP	763-69-9	$C_7H_{14}O_3$	1.2	+	0.75	+				ne
Ethyl formate		109-94-4	$C_3H_6O_2$					1.9		10.61	100
Ethylhexyl acrylate, 2-	Acrylic acid 2-ethylhexyl ester	103-11-7	$C_{11}H_{20}O_2$			1.1	+	0.5	+		ne
Ethylhexanol	2-Ethyl-1-hexanol	104-76-7	C8$H_{18}O$			1.9				≤10.6	
Ethylidenenorbornene	5-Ethylidene bicyclo(2,2,1)hept-2-ene	16219-75-3	C_9H_{12}	0.4	+	0.39	+	0.34	+	≤8.8	ne
Ethyl (S)-(-)-lactate see also DS-108F	Ethyl lactate, Ethyl (S)-(-)-hydroxypropionate	687-47-8 97-64-3	$C_5H_{10}O_3$	13	+	3.2	+	1.6	+	~10	ne
Ethyl mercaptan	Ethanethiol	75-08-1	C_2H_6S	0.60	+	0.56	+			9.29	0.5
Ethyl sulfide	Diethyl sulfide	352-93-2	$C_4H_{10}S$			0.5	+			8.43	ne
Formaldehyde	Formalin	50-00-0	CH_2O	NR	+	NR	+	1.6	+	10.87	C0.3
Formamide		75-12-7	CH_3NO			6.9	+	4		10.16	10
Formic acid		64-18-6	CH_2O_2	NR	+	NR	+	9	+	11.33	5
Furfural	2-Furaldehyde	98-01-1	$C_5H_4O_2$			0.92	+	0.8	+	9.21	2
Furfuryl alcohol		98-00-0	$C_5H_6O_2$			0.80	+			<9.5	10
Gasoline #1		8006-61-9	m.w. 72			0.9	+				300
Gasoline #2, 92 octane		8006-61-9	m.w. 93	1.3	+	1.0	+	0.5	+		300
Glutaraldehyde	1,5-Pentanedial, Glutaric dialdehyde	111-30-8	$C_5H_8O_2$	1.1	+	0.8	+	0.6	+		C0.05
Glycidyl methacrylate	2,3-Epoxypropyl methacrylate	106-91-2	$C_7H_{10}O_3$	2.6	+	1.2	+	0.9	+		0.5
Halothane	2-Bromo-2-chloro-1,1,1-trifluoroethane	151-67-7	$C_2HBrClF_3$					0.6		11.0	50
HCFC-22 see Chlorodifluoromethane											
HCFC-123 see 2,2-Dichloro-1,1,1-trifluoroethane											
HCFC-141B see 1,1-Dichloro-1-fluoroethane											
HCFC-142B see 1-Chloro-1,1-difluoroethane											
HCFC-134A see 1,1,1,2-Tetrafluoroethane											
HCFC-225 see Dichloropentafluoropropane											
Heptane, n-		142-82-5	C_7H_{16}	45	+	2.8	+	0.60	+	9.92	400
Heptanol, 4-	Dipropylcarbinol	589-55-9	$C_7H_{16}O$	1.8	+	1.3	+	0.5	+	9.61	ne
Hexamethyldisilazane, 1,1,1,3,3,3- *	HMDS	999-97-3	$C_6H_{19}NSi_2$			0.2	+	0.2	+	~8.6	ne
Hexamethyldisiloxane	HMDSx	107-46-0	$C_6H_{18}OSi_2$	0.33	+	0.27	+	0.25	+	9.64	ne
Hexane, n-		110-54-3	C_6H_{14}	350	+	4.3	+	0.54	+	10.13	50
Hexanol, 1-	Hexyl alcohol	111-27-3	$C_6H_{14}O$	9	+	2.5	+	0.55	+	9.89	ne
Hexene, 1-		592-41-6	C_6H_{12}			0.8				9.44	30
HFE-7100 see Methyl nonafluorobutyl ether											
Histoclear (Histo-Clear)	Limonene/corn oil reagent		m.w. ~136	0.5	+	0.4	+	0.3	+		ne
Hydrazine *		302-01-2	H_4N_2	>8	+	2.6	+	2.1	+	8.1	0.01
Hydrazoic acid	Hydrogen azide		HN_3							10.7	
Hydrogen	Synthesis gas	1333-74-0	H_2	NR	+	NR	+	NR	+	15.43	ne
Hydrogen cyanide	Hydrocyanic acid	74-90-8	HCN	NR	+	NR	+	NR	+	13.6	C4.7
Hydrogen iodide *	Hydriodic acid	10034-85-2	HI			~0.6*				10.39	
Hydrogen peroxide		7722-84-1	H_2O_2	NR	+	NR	+	NR	+	10.54	1
Hydrogen sulfide		7783-06-4	H_2S	NR	+	3.3	+	1.5	+	10.45	10
Hydroxypropyl methacrylate		27813-02-1 923-26-2	$C_7H_{12}O_3$	9.9	+	2.3	+	1.1	+		ne
Iodine *		7553-56-2	I_2	0.1	+	0.1	+	0.1	+	9.40	C0.1

RAE Systems Inc.
3775 N. First St., San Jose, CA 95134-1708 USA
Phone: +1.888.723.8823
Email: raesales@raesystems.com
Web Site: www.raesystems.com

Compound Name	Synonym/Abbreviation	CAS No.	Formula	9.8	C	10.6	C	11.7	C	IE (eV)	TWA
Iodomethane	Methyl iodide	74-88-4	CH_3I	0.21	+	0.22	+	0.26	+	9.54	2
Isoamyl acetate	Isopentyl acetate	123-92-2	$C_7H_{14}O_2$	10.1		2.1		1.0		<10	100
Isobutane	2-Methylpropane	75-28-5	C_4H_{10}			100	+	1.2	+	10.57	ne
Isobutanol	2-Methyl-1-propanol	78-83-1	$C_4H_{10}O$	19	+	3.8	+	1.5		10.02	50
Isobutene	Isobutylene, Methyl butene	115-11-7	C_4H_8	1.00	+	1.00	+	1.00	+	9.24	Ne
Isobutyl acrylate	Isobutyl 2-propenoate	106-63-8	$C_7H_{12}O_2$			1.5	+	0.60	+		Ne
Isoflurane	1-Chloro-2,2,2-trifluoroethyl difluoromethyl ether, forane	26675-46-7	$C_3H_2ClF_5O$	NR	+	NR	+	48	+	~11.7	Ne
Isooctane	2,2,4-Trimethylpentane	540-84-1	C8H18			1.2				9.86	ne
Isopar E Solvent	Isoparaffinic hydrocarbons	64741-66-8	m.w. 121	1.7	+	0.8	+				Ne
Isopar G Solvent	Photocopier diluent	64742-48-9	m.w. 148			0.8	+				Ne
Isopar K Solvent	Isoparaffinic hydrocarbons	64742-48-9	m.w. 156	0.9	+	0.5	+	0.27	+		Ne
Isopar L Solvent	Isoparaffinic hydrocarbons	64742-48-9	m.w. 163	0.9	+	0.5	+	0.28	+		Ne
Isopar M Solvent	Isoparaffinic hydrocarbons	64742-47-8	m.w. 191			0.7	+	0.4	+		Ne
Isopentane	2-Methylbutane	78-78-4	C_5H_{12}			8.2					Ne
Isophorone		78-59-1	$C_9H_{14}O$					3		9.07	C5
Isoprene	2-Methyl-1,3-butadiene	78-79-5	C_5H_8	0.69	+	0.63	+	0.60	+	8.85	Ne
Isopropanol	Isopropyl alcohol, 2-propanol, IPA	67-63-0	C_3H_8O	500	+	6.0	+	2.7		10.12	200
Isopropyl acetate		108-21-4	$C_5H_{10}O_2$			2.6				9.99	100
Isopropyl ether	Diisopropyl ether	108-20-3	$C_6H_{14}O$			0.8				9.20	250
Jet fuel JP-4	Jet B, Turbo B, F-40 Wide cut type aviation fuel	8008-20-6 + 64741-42-0	m.w. 115			1.0	+	0.4	+		Ne
Jet fuel JP-5	Jet 5, F-44, Kerosene type aviation fuel	8008-20-6 + 64747-77-1	m.w. 167			0.6	+	0.5	+		29
Jet fuel JP-8	Jet A-1, F-34, Kerosene type aviation fuel	8008-20-6 + 64741-77-1	m.w. 165			0.6	+	0.3	+		30
Jet fuel A-1 (JP-8)	F-34, Kerosene type aviation fuel	8008-20-6 + 64741-77-1	m.w. 145			0.67					34
Jet Fuel TS	Thermally Stable Jet Fuel, Hydrotreated kerosene fuel	8008-20-6 + 64742-47-8	m.w. 165	0.9	+	0.6	+	0.3	+		30
Limonene, D-	(R)-(+)-Limonene	5989-27-5	$C_{10}H_{16}$			0.33	+			~8.2	Ne
Kerosene C10-C16 petro.distillate – see Jet Fuels		8008-20-6									
MDI – see 4,4'-Methylenebis(phenylisocyanate)											
Maleic anhydride	2,5-Furandione	108-31-6	$C_4H_2O_3$							~10.8	0.1
Mesitylene	1,3,5-Trimethylbenzene	108-67-8	C_9H_{12}	0.36	+	0.35	+	0.3	+	8.41	25
Methallyl chloride – see 3-Chloro-2-methylpropene											
Methane	Natural gas	74-82-8	CH_4	NR	+	NR	+	NR	+	12.61	Ne
Methanol	Methyl alcohol, carbinol	67-56-1	CH_4O	NR	+	NR	+	2.5	+	10.85	200
Methoxyethanol, 2-	Methyl cellosolve, Ethylene glycol monomethyl ether	109-86-4	$C_3H_8O_2$	4.8	+	2.4	+	1.4	+	10.1	5
Methoxyethoxyethanol, 2-	2-(2-Methoxyethoxy)ethanol Diethylene glycol monomethyl ether	111-77-3	$C_7H_{16}O$	2.3	+	1.2	+	0.9	+	<10	Ne
Methoxyethyl ether, 2-	bis(2-Methoxyethyl) ether, Diethylene glycol dimethyl ether, Diglyme	111-96-6	$C_6H_{14}O_3$	0.64	+	0.54	+	0.44	+	<9.8	Ne
Methyl acetate		79-20-9	$C_3H_6O_2$	NR	+	6.6	+	1.4	+	10.27	200
Methyl acrylate	Methyl 2-propenoate, Acrylic acid methyl ester	96-33-3	$C_4H_6O_2$			3.7	+	1.2	+	(9.9)	2
Methylamine	Aminomethane	74-89-5	CH_5N			1.2				8.97	5
Methyl amyl ketone	MAK, 2-Heptanone, Methyl pentyl ketone	110-43-0	$C_7H_{14}O$	0.9	+	0.85	+	0.5	+	9.30	50
Methyl bromide	Bromomethane	74-83-9	CH_3Br	110	+	1.7	+	1.3	+	10.54	1
Methyl t-butyl ether	MTBE, *tert*-Butyl methyl ether	1634-04-4	$C_5H_{12}O$			0.9	+			9.24	40
Methyl cellosolve	see 2-Methoxyethanol										
Methyl chloride	Chloromethane	74-87-3	CH_3Cl	NR	+	NR	+	0.74	+	11.22	50
Methylcyclohexane		107-87-2	C_7H_{14}	1.6	+	0.97	+	0.53	+	9.64	400
Methylene bis(phenyl-isocyanate), 4,4'- *	MDI, Mondur M		$C_{15}H_{10}N_2O_2$	Very slow ppb level response							0.005

RAE Systems Inc.
3775 N. First St., San Jose, CA 95134-1708 USA
Phone: +1.888.723.8823
Email: raesales@raesystems.com
Web Site: www.raesystems.com

Compound Name	Synonym/Abbreviation	CAS No.	Formula	9.8	C	10.6	C	11.7	C	IE (eV)	TWA
Methylene chloride	Dichloromethane	75-09-2	CH_2Cl_2	NR	+	NR	+	0.89	+	11.32	25
Methyl ether	Dimethyl ether	115-10-6	C_2H_6O	4.8	+	3.1	+	2.5	+	10.03	Ne
Methyl ethyl ketone	MEK, 2-Butanone	78-93-3	C_4H_8O	0.86	+	0.9	+	1.1	+	9.51	200
Methylhydrazine	Monomethylhydrazine, Hydrazomethane	60-34-4	$C_2H_6N_2$	1.4	+	1.2	+	1.3	+	7.7	0.01
Methyl isoamyl ketone	MIAK, 5-Methyl-2-hexanone	110-12-3	$C_7H_{14}O$	0.8	+	0.76	+	0.5	+	9.28	50
Methyl isobutyl ketone	MIBK, 4-Methyl-2-pentanone	108-10-1	$C_6H_{12}O$	0.9	+	0.8	+	0.6	+	9.30	50
Methyl isocyanate	CH3NCO	624-83-9	C_2H_3NO	NR	+	4.6	+	1.5		10.67	0.02
Methyl isothiocyanate	CH3NCS	551-61-6	C_2H_3NS	0.5	+	0.45	+	0.4	+	9.25	ne
Methyl mercaptan	Methanethiol	74-93-1	CH_4S	0.65		0.54		0.66		9.44	0.5
Methyl methacrylate		80-62-6	$C_5H_8O_2$	2.7	+	1.5	+	1.2	+	9.7	100
Methyl nonafluorobutyl ether	HFE-7100DL	163702-08-7, 163702-07-6	$C_5H_3F_9O$			NR	+	~35	+		ne
Methyl-1,5-pentanediamine, 2- (coats lamp) *	Dytek-A amine, 2-Methyl pentamethylenediamine	15520-10-2	C6H16N2			~0.6	+			<9.0	ne
Methyl propyl ketone	MPK, 2-Pentanone	107-87-9	$C_5H_{12}O$			0.93	+	0.79	+	9.38	200
Methyl-2-pyrrolidinone, N-	NMP, N-Methylpyrrolidone, 1-Methyl-2-pyrrolidinone, 1-Methyl-2-pyrrolidone	872-50-4	C_5H_9NO	1.0	+	0.8	+	0.9	+	*9.17*	ne
Methyl salicylate	Methyl 2-hydroxybenzoate	119-36-8	C_8H_8O3	1.3	+	0.9	+	0.9	+	~9	ne
Methylstyrene, α-	2-Propenylbenzene	98-83-9	C_9H_{10}			0.5				8.18	50
Methyl sulfide	DMS, Dimethyl sulfide	75-18-3	C_2H_6S	0.49	+	0.44	+	0.46	+	8.69	ne
Mineral spirits	Stoddard Solvent, Varsol 1, White Spirits	8020-83-5 8052-41-3 68551-17-7	m.w. 144	1.0		0.69	+	0.38	+		100
Mineral Spirits - Viscor 120B	Calibration Fluid, b.p. 156-207°C	8052-41-3	m.w. 142	1.0	+	0.7	+	0.3	+		100
Monoethanolamine - see Ethanolamine											
Mustard *	HD, Bis(2-chloroethyl) sulfide	505-60-2 39472-40-7 68157-62-0	$C_4H_8Cl_2S$			0.6					0.0005
Naphtha - see VM & P Naptha											
Naphthalene	Mothballs	91-20-3	$C_{10}H_8$	0.45	+	0.42	+	0.40	+	8.13	10
Nickel carbonyl (in CO)	Nickel tetracarbonyl	13463-39-3	C_4NiO_4			0.18				<8.8	0.001
Nicotine		54-11-5	$C_{10}H_{14}N_2$			2.0				≤10.6	
Nitric oxide		10102-43-9	NO	~6		5.2	+	2.8	+	9.26	25
Nitrobenzene		98-95-3	$C_6H_5NO_2$	2.6	+	1.9	+	1.6	+	9.81	1
Nitroethane		79-24-3	$C_2H_5NO_2$					3		10.88	100
Nitrogen dioxide		10102-44-0	NO_2	23	+	16	+	6	+	9.75	3
Nitrogen trifluoride		7783-54-2	NF_3	NR		NR		NR		13.0	10
Nitromethane		75-52-5	CH_3NO_2					4		11.02	20
Nitropropane, 2-		79-46-9	$C_3H_7NO_2$					2.6		10.71	10
Nonane		111-84-2	C_9H_{20}			1.4				9.72	200
Norpar 12	n-Paraffins, mostly C_{10}-C_{13}	64771-72-8	m.w. 161	3.2	+	1.1	+	0.28	+		ne
Norpar 13	n-Paraffins, mostly C_{13}-C_{14}	64771-72-8	m.w. 189	2.7	+	1.0	+	0.3	+		ne
Octamethylcyclotetrasiloxane		556-67-2	$C_8H_{24}O_4Si_4$	0.21	+	0.17	+	0.14	+		ne
Octamethyltrisiloxane		107-51-7	$C_8H_{24}O_2Si_3$	0.23	+	0.18	+	0.17	+	<10.0	ne
Octane, n-		111-65-9	C_8H_{18}	13	+	1.8	+			9.82	300
Octene, 1-		111-66-0	C_8H_{16}	0.9	+	0.75	+	0.4	+	9.43	75
Pentane		109-66-0	C_5H_{12}	80	+	8.4	+	0.7	+	10.35	600
Peracetic acid *	Peroxyacetic acid, Acetyl hydroperoxide	79-21-0	$C_2H_4O_3$	NR	+	NR	+	2.3	+		ne
Peracetic/Acetic acid mix *	Peroxyacetic acid, Acetyl hydroperoxide	79-21-0	$C_2H_4O_3$			50	+	2.5	+		ne
Perchloroethene	PCE, Perchloroethylene, Tetrachloroethylene	127-18-4	C_2Cl_4	0.69	+	0.57	+	0.31	+	9.32	25
PGME	Propylene glycol methyl ether, 1-Methoxy-2-propanol	107-98-2	$C_6H_{12}O_3$	2.4	+	1.5	+	1.1	+		100

RAE Systems Inc.
3775 N. First St., San Jose, CA 95134-1708 USA
Phone: +1.888.723.8823
Email: raesales@raesystems.com
Web Site: www.raesystems.com

Compound Name	Synonym/Abbreviation	CAS No.	Formula	9.8	C	10.6	C	11.7	C	IE (eV)	TWA
PGMEA	Propylene glycol methyl ether acetate, 1-Methoxy-2-acetoxypropane, 1-Methoxy-2-propanol acetate	108-65-6	$C_6H_{12}O_3$	1.65	+	1.0	+	0.8	+		ne
Phenol	Hydroxybenzene	108-95-2	C_6H_6O	1.0	+	1.0	+	0.9	+	8.51	5
Phosgene	Dichlorocarbonyl	75-44-5	CCl_2O	NR	+	NR	+	8.5	+	11.2	0.1
Phosgene in Nitrogen	Dichlorocarbonyl	75-44-5	CCl_2O	NR	+	NR	+	6.8	+	11.2	0.1
Phosphine (coats lamp)		7803-51-2	PH_3	28		3.9	+	1.1	+	9.87	0.3
Photocopier Toner	Isoparaffin mix					0.5	+	0.3	+		ne
Picoline, 3-	3-Methylpyridine	108-99-6	C_6H_7N			0.9				9.04	ne
Pinene, α-		2437-95-8	$C_{10}H_{16}$			0.31	+	0.47		8.07	ne
Pinene, β-		18172-67-3	$C_{10}H_{16}$	0.38	+	0.37	+	0.37	+	~8	100
Piperylene, isomer mix	1,3-Pentadiene	504-60-9	C_5H_8	0.76	+	0.69	+	0.64	+	8.6	100
Propane		74-98-6	C_3H_8			NR	+	1.8	+	10.95	2500
Propanol, n-	Propyl alcohol	71-23-8	C_3H_8O			5		1.7		10.22	200
Propene	Propylene	115-07-1	C_3H_6	1.5	+	1.4	+	1.6	+	9.73	ne
Propionaldehyde	Propanal	123-38-6	C_3H_6O			1.9				9.95	ne
Propyl acetate, n-		109-60-4	$C_5H_{10}O_2$			3.5		2.3		10.04	200
Propylamine, n-	1-Propylamine, 1-Aminopropane	107-10-8	C_3H_9N	1.1	+	1.1	+	0.9	+	8.78	ne
Propylene carbonate *		108-32-7	$C_4H_6O_3$			62	+	1	+	10.5	ne
Propylene glycol	1,2-Propanediol	57-55-6	$C_3H_8O_2$	18		5.5	+	1.6	+	<10.2	ne
Propylene glycol propyl ether	1-Propoxy-2-propanol	1569-01-3	$C_6H_{14}O_2$	1.3	+	1.0	+	1.6	+		ne
Propylene oxide	Methyloxirane	75-56-9 16088-62-3 15448-47-2	C_3H_6O	~240		6.6	+	2.9	+	10.22	20
Propyleneimine	2-Methylaziridine	75-55-8	C_3H_7N	1.5	+	1.3	+	1.0	+	9.0	2
Propyl mercaptan, 2-	2-Propanethiol, Isopropyl mercaptan	75-33-2	C_3H_8S	0.64	+	0.66	+			9.15	ne
Pyridine		110-86-1	C_5H_5N	0.78	+	0.7	+	0.7	+	9.25	5
Pyrrolidine (coats lamp)	Azacyclohexane	123-75-1	C_4H_9N	2.1	+	1.3	+	1.6	+	~8.0	ne
RR7300 (PGME/PGMEA)	70:30 PGME:PGMEA (1-Methoxy-2-propanol:1-Methoxy-2-acetoxypropane)	107-98-2	$C_4H_{10}O_2$ / $C_6H_{12}O_3$			1.4	+	1.0	+		ne
Sarin	GB, Isopropyl methylphosphonofluoridate	107-44-8 50642-23-4	$C_4H_{10}FO_2P$			~3					
Stoddard Solvent - see Mineral Spirits		8020-83-5									
Styrene		100-42-5	C_8H_8	0.45	+	0.40	+	0.4	+	8.43	20
Sulfur dioxide		7446-09-5	SO_2	NR		NR	+	NR	+	12.32	2
Sulfur hexafluoride		2551-62-4	SF_6	NR		NR		NR		15.3	1000
Sulfuryl fluoride	Vikane	2699-79-8	SO_2F_2	NR		NR		NR		13.0	5
Tabun *	Ethyl N, N-dimethylphosphoramidocyanidate	77-81-6	$C_5H_{11}N_2O_2P$			0.8					15ppt
Tetrachloroethane, 1,1,1,2-		630-20-6	$C_2H_2Cl_4$					1.3		~11.1	ne
Tetrachloroethane, 1,1,2,2-		79-34-5	$C_2H_2Cl_4$	NR	+	NR	+	0.60	+	~11.1	1
Tetrachlorosilane		10023-04-7	$SiCl_4$	NR		NR		15	+	11.79	ne
Tetraethyl lead	TEL	78-00-2	$C_8H_{20}Pb$	0.4		0.3		0.2		~11.1	0.008
Tetraethyl orthosilicate	Ethyl silicate, TEOS	78-10-4	$C_8H_{20}O_4Si$			0.7	+	0.2	+	~9.8	10
Tetrafluoroethane, 1,1,1,2-	HFC-134A	811-97-2	$C_2H_2F_4$			NR		NR			ne
Tetrafluoroethene	TFE, Tetrafluoroethylene, Perfluoroethylene	116-14-3	C_2F_4			~15				10.12	ne
Tetrafluoromethane	CFC-14, Carbon tetrafluoride	75-73-0	CF_4			NR	+	NR	+	>15.3	ne
Tetrahydrofuran	THF	109-99-9	C_4H_8O	1.9	+	1.7	+	1.0	+	9.41	200
Tetramethyl orthosilicate	Methyl silicate, TMOS	681-84-5	$C_4H_{12}O_4Si$	10	+	1.9	+			~10	1
Therminol® D-12 *	Hydrotreated heavy naphtha	64742-48-9	m.w. 160	0.8	+	0.51	+	0.33	+		ne
Therminol® VP-1 *	Dowtherm A, 3:1 Diphenyl oxide:	101-84-8	$C_{12}H_{10}O$			0.4	+				1
	Biphenyl	92-52-4	$C_{12}H_{10}$								
Toluene	Methylbenzene	108-88-3	C_7H_8	0.54	+	0.50	+	0.51	+	8.82	50

RAE Systems Inc.
3775 N. First St., San Jose, CA 95134-1708 USA
Phone: +1.888.723.8823
Email: raesales@raesystems.com
Web Site: www.raesystems.com

Compound Name	Synonym/Abbreviation	CAS No.	Formula	9.8	C	10.6	C	11.7	C	IE (eV)	TWA
Tolylene-2,4-diisocyanate	TDI, 4-Methyl-1,3-phenylene-2,4-diisocyanate	584-84-9	$C_9H_6N_2O_2$	1.4	+	1.4	+	2.0	+		0.002
Trichlorobenzene, 1,2,4-	1,2,4-TCB	120-82-1	$C_6H_3Cl_3$	0.7	+	0.46	+			9.04	C5
Trichloroethane, 1,1,1-	1,1,1-TCA, Methyl chloroform	71-55-6	$C_2H_3Cl_3$			NR	+	1	+	11	350
Trichloroethane, 1,1,2-	1,1,2-TCA	79-00-5	$C_2H_3Cl_3$	NR	+	NR	+	0.9	+	11.0	10
Trichloroethene	TCE, Trichoroethylene	79-01-6	C_2HCl_3	0.62	+	0.54	+	0.43	+	9.47	50
Trichloromethylsilane	Methyltrichlorosilane	75-79-6	CH_3Cl_3Si	NR		NR		1.8	+	11.36	ne
Trichlorotrifluoroethane, 1,1,2-	CFC-113	76-13-1	$C_2Cl_3F_3$			NR		NR		11.99	1000
Triethylamine	TEA	121-44-8	$C_6H_{15}N$	0.95	+	0.9	+	0.65	+	7.3	1
Triethyl borate	TEB; Boric acid triethyl ester	150-46-9	$C_6H_{15}O_3B$			2.2	+	1.1	+	~10	ne
Triethyl phosphate	Ethyl phosphate	78-40-0	$C_6H_{15}O_4P$	~50	+	3.1	+	0.60	+	9.79	ne
Trifluoroethane, 1,1,2-		430-66-0	$C_2H_3F_3$					34		*12.9*	ne
Trimethylamine		75-50-3	C_3H_9N			0.9				7.82	5
Trimethylbenzene, 1,3,5- - see Mesitylene		108-67-8									25
Trimethyl borate	TMB; Boric acid trimethyl ester, Boron methoxide	121-43-7	$C_3H_9O_3B$			5.1	+	1.2	+	10.1	ne
Trimethyl phosphate	Methyl phosphate	512-56-1	$C_3H_9O_4P$			8.0	+	1.3	+	9.99	ne
Trimethyl phosphite	Methyl phosphite	121-45-9	$C_3H_9O_3P$			1.1	+		+	*8.5*	2
Turpentine	Pinenes (85%) + other diisoprenes	8006-64-2	$C_{10}H_{16}$	0.37	+	0.30	+	0.29	+	~8	20
Undecane		1120-21-4	$C_{11}H_{24}$			2				9.56	ne
Varsol – see Mineral Spirits											
Vinyl actetate		108-05-4	$C_4H_6O_2$	1.5	+	1.2	+	1.0	+	9.19	10
Vinyl bromide	Bromoethylene	593-60-2	C_2H_3Br			0.4				9.80	5
Vinyl chloride	Chloroethylene, VCM	75-01-4	C_2H_3Cl			2.0	+	0.6	+	9.99	5
Vinyl-1-cyclohexene, 4-	Butadiene dimer, 4-Ethenylcyclohexene	100-40-3	C_8H_{12}	0.6	+	0.56	+			9.83	0.1
Vinylidene chloride - see 1,1-Dichloroethene											
Vinyl-2-pyrrolidinone, 1-	NVP, N-vinylpyrrolidone, 1-ethenyl-2-pyrrolidinone	88-12-0	C_6H_9NO	1.0	+	0.8	+	0.9	+		ne
Viscor 120B - see Mineral Spirits - Viscor 120B Calibration Fluid											
V. M. & P. Naphtha	Ligroin; Solvent naphtha; Varnish maker's & painter's naptha	64742-89-8	m.w. 111 (C_8-C_9)	1.7	+	0.97	+				300
Xylene, m-	1,3-Dimethylbenzene	108-38-3	C_8H_{10}	0.50	+	0.44	+	0.40	+	8.56	100
Xylene, o-	1,2-Dimethylbenzene	95-47-6	C_8H_{10}	0.56	+	0.46	+	0.43		8.56	100
Xylene, p-	1,4-Dimethylbenzene	106-42-3	C_8H_{10}	0.48	+	0.39	+	0.38	+	8.44	100
None				1		1		1			
Undetectable				1E+6		1E+6		1E+6			

* Compounds indicated in green can be detected using a MiniRAE 2000 or ppbRAE/+ with slow response, but may be lost by adsorption on a MultiRAE or EntryRAE. Response on multi-gas meters can give an indication of relative concentrations, but may not be quantitative and for some chemicals no response is observed.

Therminol® is a registered Trademark of Solutia, Inc.

RAE Systems Inc.
3775 N. First St., San Jose, CA 95134-1708 USA
Phone: +1.888.723.8823
Email: raesales@raesystems.com
Web Site: www.raesystems.com

SOIL SAMPLE COLLECTION METHODS

PURPOSE

This SOP describes the procedures for collecting surface and subsurface soil samples. Soil sampling collection is conducted to assess the chemical, physical, and visual characteristics of surface and subsurface soils. This guideline provides a description of the principles of operation, applicability, and implementability of standard soil sampling methods used during site investigations. These are typical procedures, which may be varied or changed as required, dependent upon site conditions, equipment limitations, or limitations imposed by the procedure.

Relevant EHS Support SOPs

- SOP-03 Utility Clearance
- SOP-04 Field Documentation
- SOP-05 Sample Management and Shipping
- SOP-06 Pre-Field Mobilization
- SOP-07 Investigation Derived Waste
- SOP-08 Field Equipment Operation and Calibration
- SOP-09 Equipment Decontamination
- SOP-20 Organic Vapor Monitoring in Soil
- SOP-22 Soil Sampling for Chemical Analysis
- SOP-23 Soil Sampling for Physical Analysis
- SOP-24 to SOP 27 Subsurface Drilling Methods
- SOP-30 Field Classification and Description of Soil
- SOP-31 Field Classification and Description of Rock
- SOP-32 Borehole and Well Abandonment
- SOP-36 Excavation and Trenching Activities.

Required Materials

- Air monitoring instrumentation (e.g., PID) and supplies
- Field logbook and field documentation
- Site maps, site layouts, site plans
- Health and Safety Plan (HASP)
- Appropriate personal protective equipment (PPE)
- Black waterproof and/or indelible ink pens
- Stainless steel spoons/trowels/bowls/pans, if applicable
- Brass or stainless steel sampling sleeves, if applicable
- Tape measure
- Paper towels or hand wipes
- Decontamination supplies
- Appropriate sample containers, sampling kits, labels, coolers and ice, Chain of Custody forms
- Soil logging charts, Munsell soil color charts, pocket penetrometer.

1.0 SOIL SAMPLE COLLECTION METHODS

Soil samples are used to assess the chemical, physical, and hydrogeologic properties of site soil. Analytical data aid in the characterization of the site and soil properties, identification of hazardous substance source areas, and determination of the nature and extent of contamination. Soil samples collection for chemical analysis is provided in SOP-22 Soil Sampling for Chemical Analysis and soil sample collection for physical analysis is provided in SOP-23 Soil Sampling for Physical Analysis. The project work plan will detail sample locations, numbers, analytical methods, and specific field techniques that may be required.

Surface soil samples are defined in this SOP as samples collected from 0 to 6 inches (about 15 centimeters) below ground surface (bgs) or the first 2 inches (about 5 centimeters) of soil below a surficial layer of vegetation. These samples can be obtained easily using manual methods (i.e., a spade, trowel and scoop, or hand auger).

Subsurface soil samples to be collected from depths greater than 6 inches bgs can be obtained manually using a hand-auger, or a mechanized machine—a direct push rig, drilling rig, or excavating device (e.g., backhoe). Surface soil samples and subsurface soil samples can also be obtained with the assistance of a drilling rig equipped with a corer or split-barrel sampler. The corer may be unlined or lined with a plastic sleeve. The split-barrel sampler may be either unlined or lined with brass or stainless steel thin-wall sleeves. The most-commonly used subsurface advancement techniques are referenced in SOP-24 to SOP-27. Additional sampler details is provided in SOP-24 Soil Sampling for Physical Analysis.

An excavating device can provide bulk soil samples from the ground surface to the limits of the excavator (typically 15 to 25 feet bgs). For bulk soil sampling at greater depths in unsaturated soils, a bucket auger rig may be used.

Composite soil samples are combinations of soil samples collected at various sample locations, or at various depths at a single location. Analysis of composite samples yields a value representing an average over the various sampled sites or depths from which individual samples were collected. Composite soil sampling is typically used in sampling soil for the characterization of investigation derived waste (SOP-07 Investigative Derived Waste) for disposal purposes.

1.1 General Soil Sample Collection Guidelines

The guidelines provided in SOP-06 Pre-Field Mobilization should be considered in order to prepare for the soil investigation. If required, boring locations should be surveyed and staked. The State One-Call Utility locate service will be notified for any subsurface work. Utility clearance will be conducted in accordance with the procedures outlined in SOP-03 Utility Clearance. The project work plan should be consulted to determine if additional utility clearance measures are required.

Field equipment used in conjunction with this SOP will be calibrated in accordance with the guidelines provided in SOP-08 Field Equipment Operation and Maintenance. Field equipment will be properly decontaminated in accordance with SOP-09 Equipment Decontamination or SOP-10 Drill Rig and Heavy Equipment Decontamination.

Soils and other waste generated in conjunction with this SOP will be properly disposed (SOP-07 Investigative Derived Waste).

1.2 Surface Sample Collection

Tools such as spades, shovels, trowels, scoops, or spoons can be used to collect most surface soil samples.

The following procedures are used to collect surface soil samples:

1. Carefully remove the top layer of soil or debris to the desired sample depth using a properly decontaminated stainless steel hand tool (e.g., scoop, plastic spoon, trowel, spade, shovel).
2. Collect the sample with the appropriate hand tool.
3. If volatile organic analysis is to be conducted, transfer the sample directly into the appropriately sample container with a stainless steel lab spoon, or equivalent and secure the cap tightly. Then, collect the remainder of sample. Screening for the presence of volatile organic vapor will be conducted in accordance with SOP-20 Organic Vapor Monitoring in Soil.
4. If a composite soil sample is required, place the various soil samples into a stainless steel or other appropriate container and mix thoroughly to obtain a homogenous sample representative of the entire depth sampled.

1.3 Subsurface Sample Collection

1.3.1 Hand Auger

The equipment used for this method of soil sampling consists of an auger, a series of extensions, a T-handle, and an optional core sampler. Disturbed soil samples can be collected directly from the bucket auger and undisturbed soil samples will require the use of a core sampler used in place of a bucket type auger. The procedures to collect both types of soil samples is provided.

<u>Disturbed Sample</u>

1. Choose the proper bucket auger for the soil type.
2. Assemble the auger as outlined in SOP-24 Hand Auger.
3. Advance the auger to the desired depth.
4. Place the decontaminated bucket or new, decontaminated auger bucket back in the borehole. Lower the bucket carefully to avoid contact with the sidewalls of the borehole if possible. Auger down and retrieve a disturbed soil sample from the desired depth.
5. Collect the sample from the bucket auger using a spoon or other apparatus.
6. Log the soil sample according to the project work plan or in accordance with the guideline provided in SOP-30 Field Classification and Description of Soils. Monitor for the presence of volatile organics, if required, in accordance with the guidelines provided in SOP-20 Organic Vapor Monitoring in Soil.
7. Collect soil samples according to the project work plan and in accordance with the guidelines provided in SOP-22 Soil Sampling for Chemical Analysis or SOP-23 Soil Sampling for Physical Analysis.
8. Abandon the borehole according to applicable state, county, and local regulations and the SOP for Borehole and Well Abandonment (SOP-32).

<u>Undisturbed Sample</u>

1. Follow procedures 1 through 3 from above for collecting a disturbed sample.
2. Remove the bucket auger from the lead rod. Replace the removed bucket with a pre-cleaned thin wall tube or core sampler. Install the proper cutting tip.

3. Carefully lower the sampler down the borehole and avoid contacting the sides of the borehole. Gradually force the tube sampler into the soil but avoid hammering the rods as the vibrations may cause the boring walls to collapse.
4. Retrieve the sampler from the borehole and remove the soil core.
5. Discard the top portion of the soil core (approximately 1 inch or 3 centimeters) as this soil may have been collected from the sidewall onto the bottom of the borehole or from collapse of a sidewall.
6. Place the remaining soil core into the appropriate labeled sample container, or secure end caps to each side of the corer with tape.
7. Log the soil sample according to the project work plan or in accordance with the guideline provided in SOP-30 Field Classification and Description of Soils. Monitor for the presence of volatile organics, if required, in accordance with the guidelines provided in SOP-20 Organic Vapor Monitoring in Soil.
8. Collect soil samples according to the project work plan and in accordance with the guidelines provided in SOP-22 Soil Sampling for Chemical Analysis or SOP-23 Soil Sampling for Physical Analysis.
9. Abandon the borehole according to applicable federal, state, county, or local regulations and the SOP for Borehole and Well Abandonment (SOP-32).

1.3.2 Direct Push Technology Soil Sample Liners

Direct-push technology (DPT) systems are hydraulically powered machines that use static and dynamic percussion force to advance small-diameter sampling tools to retrieve soil samples (among other sampling media). The DPT system is described in SOP-25 Drilling Methods using Direct Push Technology. Subsurface soils are collected in a Macro Core Sampler or Dual Tube Sampler containing an internal plastic liner (polyvinyl chloride or acetate sleeves). The soil sample liner is typically 4 to 5 feet long. **Figure 1** shows a typical soil sample liner used in DPT systems.

Figure 1 Bottom of DPT Soil Sample Line (left), Outer Sample, and Liner

The following section describes the procedure for collecting soil samples using DPT

1. Thread the DPT sampler onto the leading end of a probe rod and begin advancing the probe rod to the desired sampling depth. Do not apply petroleum-based lubricants to pipe threads to facilitate ease of connection.
2. The DPT sampler is generally advanced four to five feet at a time, or as required.
3. Soil is collected into the sample liner by the cutting shoe cutting the soil and allowing the soil to be pushed into the sample liner.
4. Once the DPT sampler has been advanced to the required depth, the bottom of the sampler is “closed” by the end cap, which prevents the soil from discharging from the liner.
5. Directly following core retrieval to the surface, remove the liner containing the soil core from the DPT sampler, and place the liner on plastic sheeting.
6. Cut the liner open lengthwise twice to expose the soil core. A cut liner with soil is shown in **Figure 2**.

7. Log the soil sample according to the project work plan or in accordance with the guideline provided in SOP-30 Field Classification and Description of Soils. Monitor for the presence of volatile organics, if required, in accordance with the guidelines provided in SOP-20 Organic Vapor Monitoring in Soil.
8. Collect soil samples according to the project work plan and in accordance with the guidelines provided in SOP-22 Soil Sampling for Chemical Analysis.
9. Abandon the borehole according to applicable federal, state, county, or local regulations and the SOP for Borehole and Well Abandonment (SOP-32).

Figure 2 Example of a Cut Plastic Liner for Examination of Soil

1.3.3 Split-Spoon Sampler

Split-spoon samplers are available in a variety of types and sizes. Site conditions and project needs such as large sample volume for multiple analyses determine the specific type of split-spoon sampler to be used. Split-spoon samplers are usually steel or stainless steel, are tubular in shape, and are split longitudinally into two semi-cylindrical halves. **Figure 3** shows a generic split-spoon sampler. They may be lined or unlined. Liners are made of brass, aluminum, stainless steel, or various synthetic materials. Split-spoon samplers are generally available in 2-, 2.5-, 3-, 3.5-, and 4-inch outside diameters. Lengths range between 12 and 60 inches, but are more commonly 18- to 30-inches long. If collecting geotechnical data using the split-spoon sampler, the preferred length will be 18 or 24 inches long.

Figure 3 Split-Spoon Sampler with Soil Sample

Split spoon sampling is generally used to collect disturbed (undisturbed if a liner is used and the gauging is appropriate) soil cores of 18 or 24 inches in length. A series of consecutive cores may be extracted with a split spoon sampler to give a complete soil column profile, or a hollow stem auger may be used to drill down to the desired depth for sampling. The split spoon is then driven to its sampling depth through the bottom of the augured hole and the core extracted.

When split spoon sampling is conducted to gain geologic information, all work should be performed in accordance with ASTM D1586-98, “Standard Test Method for Penetration Test and Split-Barrel Sampling of Soils”. The following procedures are used for collecting soil samples with a split spoon:

1. Assemble the sampler by aligning both sides of barrel and then screwing the drive shoe on the bottom and the headpiece on top. The headpiece will be equipped with an end cap, which prevents soil from being lost during retrieval of the sample.
2. Advance the borehole to the appropriate depth using hollow stem augers.
3. Attached a decontaminated split-spoon sampler to the end of drilling rods and lower the sampler and rod to the bottom of the borehole. Using a 140-pound mechanically driven hammer, drive the sampler into the soil below the depth of the hollow stem auger drill bit.
4. The driving of the sampler is advanced by a mechanically-driven hammer that is raised 30-inches and then allowed to free fall to drive the split-spoon into the soil. The number of blows required to drive the sampler every 6 inches will be recorded by the geologist to determine the physical properties (e.g., density, consistency) of the soil. For example, the blow counts in a sand using a 24-inch sampler is recorded as: 5-10-30-34. This means it took 5 blows of the hammer to drive the split-spoon sampler the first 6 inches of the sampler length into the ground, it took 10 blows of the hammer to drive the split-spoon sampler the second 6 inches of the sampler length, and so on. The blow counts from the second and third intervals (e.g., 10 + 30 = 40) are summed to determine the "N" value. The N value is then compared to the ASTM standard values for density and consistency. In this example, the sandy soil would be classified as "dense" sand.
5. Withdraw the rods and sampler, and open the sampler by unscrewing the bit and head and splitting the barrel. The amount of recovery and soil type should be recorded on the boring log.
6. Log the soil sample according to the project work plan or in accordance with the guideline provided in SOP-30 Field Classification and Description of Soils. Monitor for the presence of volatile organics, if required, in accordance with the guidelines provided in SOP-20 Organic Vapor Monitoring in Soil.
7. Without disturbing the core, transfer it to appropriate labeled sample container(s) and seal tightly.
8. Collect soil samples according to the project work plan and in accordance with the guidelines provided in SOP-22 Soil Sampling for Chemical Analysis.
9. Abandon the borehole according to applicable state, county, and local regulations and the SOP for Borehole and Well Abandonment (SOP-32).

1.4 Sonic Drilling Cores

Soil samples collected using sonic drilling methods are extracted from the lead drill casing string. The depth and diameter of the soil sample is dependent on the needs of the project. To obtain the soil sample:

1. The lead drill string containing the representative sample is brought to the surface.
2. A low-density polyethylene (PE) sheeting (liner) is placed around the outside of the lead casing. The bottom of the PE liner is tied off to prevent soils from being lost from the bottom of the liner.
3. The sonic rig frequency is turned on and the soil or rock is vibrated out of the middle of the casing and into the liner (**Figure 4**).
4. Several liners may be required over the course of the advancement.
5. The liner(s) is placed on table or box (**Figure 4**) and the liner is cut open to expose the soil for observations.
6. Log the soil sample according to the project work plan or in accordance with the guideline provided in SOP-30 Field Classification and Description of Soils. Monitor for the presence of volatile organics, if required, in accordance with the guidelines provided in SOP-20 Organic Vapor Monitoring in Soil.
7. Without disturbing the core, transfer it to appropriate labeled sample container(s) and seal tightly.
8. Collect soil samples according to the project work plan and in accordance with the guidelines provided in SOP-22 Soil Sampling for Chemical Analysis.
9. Abandon the borehole according to applicable federal, state, county, or local regulations and the SOP for Borehole and Well Abandonment (SOP-32).

Figure 4 Removal of Soils into Sonic Liner and Sonic Soil Cores in a Box

1.5 Test Pits/Excavations

A backhoe can be used to remove sections of soil when detailed examination of soil characteristics is required. Excavations, including test pits, procedures can be referenced in SOP-36 Excavation and Trenching Activities.

1. Using a backhoe, excavate a trench below the cleared sampling location or to the depth specified in project work plan.
    a. For smaller trenches:
        - Place excavated soils on plastic sheeting.
        - A shovel is used to remove a one to two inch layer of soil from the vertical face of the pit where sampling is to be done.
        - Samples are taken using a trowel, scoop, or coring device at the desired intervals. Be sure to scrape the vertical face at the point of sampling to remove any soil that may have fallen from above, and to expose fresh soil for sampling.
    b. For trenches greater than 4 feet (1.5 meters) deep:
        - The excavation area must be sloped or protected by a shoring system, as required by Occupational Safety and Health Administration regulations.
        - In many instances, the backhoe bucket will collect soils from the side of the excavation and soil samples are obtained directly from the backhoe bucket.
2. Log the soil sample according to the project work plan or in accordance with the guideline provided in SOP-30 Field Classification and Description of Soils. Monitor for the presence of volatile organics, if required, in accordance with the guidelines provided in SOP-20 Organic Vapor Monitoring in Soil.
3. Collect soil samples according to the project work plan and in accordance with the guidelines provided in SOP-22 Soil Sampling for Chemical Analysis.
4. Abandon the pit or excavation according to applicable state regulations and according to the project work plan. Generally, shallow excavations can simply be backfilled with the removed soil material.

2.0 RECORDS

Field notes will be kept in a bound field logbook or approved field documentation following the format specified in SOP-04 Field Documentation. Detailed records will be maintained during sampling activities, particularly with respect to location, depth, color, odor, lithology, hydrogeologic characteristics, and readings derived from field monitoring equipment. Soils will be classified in the field using the guidelines provided in SOP-30 Field Classification and Description of Soil and SOP-31 Field Classification and Description of Rock. The following information, related to soil sampling should be recorded:

- Sampler name and type
- Length and diameter of sampler
- Liner type, length and diameter, if applicable
- Depth advanced
- Recovery in sampler per depth advanced
- Blow counts, if applicable
- Sample depth
- Sample location, including location of sample in test pits or excavation area
- Any problems encountered or alterations during sampler advancement
- Instrument calibration
- Required site maps
- Weather observations (for example, wind speed, sunny or cloudy sky, and approximate wave height)
- Description of all sampling/ monitoring equipment used, material composition, etc.

SOIL SAMPLING FOR CHEMICAL ANALYSIS

PURPOSE

This SOP describes procedures for field collection of solid materials (e.g., soils, sediments, solid wastes) for chemical analysis. This SOP describes types of samples (e.g., grab samples, composite samples) and collection of soil samples for chemical analysis of volatile organic compounds (VOCs) or other sample analysis.

This SOP follows the USEPA *Test Methods for Evaluating Solid Waste*, SW-846, specifically Method 5035A - Closed-System Purge-and-Trap and Extraction for Volatile Organics in Soil and Waste Samples for VOC analysis.

This SOP assumes bottle sets received from the laboratory will contain the required preservative (i.e., the bottles are pre-preserved by the laboratory, and preservative will not be required in the field).

Relevant EHS Support SOPs

- SOP-04 Field Documentation
- SOP-05 Sample Management and Shipping
- SOP-08 Field Equipment Operation and Calibration
- SOP-09 Equipment Decontamination
- SOP-21 Soil Sample Collection Methods.

Attachments

- Attachment A Terra Core™ Manufacturer Sampling Procedures
- Attachment B En Core® Manufacturer Sampling Procedures.

Required Materials

- Field logbook and field documentation
- Site maps, site layouts, site plans
- Health and Safety Plan (HASP)
- Appropriate personal protective equipment (PPE)
- Black waterproof and/or indelible ink pens
- Material Safety Data Sheets (from the laboratory, for each preservative type)
- En Core® Samplers and sample equipment
- Terra Core™ Samplers
- VOC sample kits (5035 sample kits including 40 milliliter (ml) volatile organic analysis (VOA) vials with stir bar preserved with 5 ml of Sodium Bisulfate, 40 ml VOA vial with 5 ml of Methanol, jars, dry weight jars)
- Additional laboratory-supplied glassware
- Stainless steel or disposable plastic sampling spatulas
- Decontamination supplies
- Labels, custody seals, coolers, ice, Chain of Custody forms, tape, plastic baggies.

1.0 SOIL, SEDIMENT, OR SOLID WASTE SAMPLING PROCEDURES

Soil, sediment, or solid waste samples are collected and analyzed to evaluate the chemical quality of the solid. There are two types of samples that can be collected during a sample event: grab samples or composite samples. Grab samples (or discrete samples) are discrete samples collected at a specific location and time. Composite samples (or homogenized samples) are samples composited from two or more locations at the time of sampling. Composite samples usually represent an averaged concentration for a period of time. Samples collected for VOC analysis are generally not composited or homogenized, unless specified.

Accurate sample collection and preservation is crucial in acquiring representative data. The project work plan or quality assurance project plan (QAPP) should be referenced to understand the project needs and sample requirements. The project work plan or QAPP should provide a clear understanding to sample locations, sample identification, analytical testing, number and type of quality control samples, or other project-related needs (objective, equipment, laboratory supplier, collection method-if required, etc.).

1.1 General Soil, Sediment or Solid Waste Sampling Considerations

The general procedures for collection of soil, sediment, or solid waste for laboratory analysis are generally straightforward. A certain volume of sample is needed to meet the requirements of the sample plan. The sample volume is placed in the appropriate jars, labeled, and sent in for laboratory analysis. The following are general considerations when preparing for collection of water samples:

- The project work plan should identify the soil sample locations, the soil sample depth interval, the required analysis, the laboratory analysis method, the sampling method(s), sampling equipment, field screening procedures, and sample collection procedures (e.g., preservation and containers, quality assurance).
- If questions exists pertaining to sampling or laboratory concerns, check with the laboratory(s) or laboratory project manager to ensure the sample containers, required sample volume, preservation, and holding times are understood prior to the project start. Several analytes in a sample suite may be grouped together in one (or more) bottle based on the preservation method and analytical testing method.
- Laboratory quality assurance and control procedures should be referenced prior to field sampling to ensure accurate the project work plan and chain of custody procedures are followed. Sample management and shipping can be referenced in SOP-05. A laboratory example of holding times can be reference as an attachment to SOP-05.
- Ensure field equipment is properly decontaminated in accordance with the guidelines provided in SOP-09 and is calibrated with the guidelines provided in SOP-08 or the instrument's manual.
- Labels should be completed in advance to the best extent possible, particularity for VOC sample jars, which are numerous and require timely sample collection. Labels should be completed as referenced in SOP-04.
- VOC samples (and other organic-sensitive analytes) are typically collected first if collecting samples for multiple analytes. A suggested sample order, if not specified in the project work plan or QAPP, may include:
    - VOCs
    - Gasoline-range petroleum hydrocarbons
    - Semi-VOCs (SVOCs)
    - Pesticides/herbicides
    - Inorganics.

- Samples analyzed for VOCs or gasoline-range petroleum hydrocarbons will be placed into the appropriate sample container directly from the sampling equipment.
- USEPA SW-846 Method 5035 and Method 5035A identify procedures to collect soil samples for VOC analysis. Soil samples must be preserved with one of two preservatives prior to analysis, either in the field at the time of collection or in the laboratory within 48 hours of collection. Field preserved samples will be collected using a Terra Core™ sampling device (or similar). Figures depicting the Terra Core™ sampler are shown in the manufacturer instructions sheet in **Attachment A**. Samples preserved in the laboratory will be collected using an En Core® sampling device. Figures depicting the En Core® sampler are shown in the manufacturer instructions sheet in **Attachment B**.
- An inclusive field preservation kit for VOCs (also referred to as a 5035 Kit) generally contains: a sample coring device (e.g., Terra Core™), sample vials containing water, sodium bisulfate, methanol, and unpreserved vials and jars. Sample jars generally come within foam padding.
- Soil samples collected for VOC analysis will be collected to a nominal weight of 5 grams or 10 grams, dependent on the project work plan. The sample weight should be within 1 gram of the nominal weight, (e.g. 5± 1 gram and 10± 1 gram). This preservation and sampling method employs the use of tared, un-preserved 40-ml glass vials with Polytetrafluoroethylene- (PTFE) lined septum screw cap and a magnetic stir bar. A minimum of three (3) sample containers with a stir bar must be used for each sample location. An additional sample aliquot is also necessary for screening and moisture determination.
- The volume of sample to be collected will vary depending on laboratory requirements and/or anticipated contaminate concentrations of the sample.
- Laboratory-supplied VOC 40-milliliter (ml) vials are pre-weighed to 0.01 grams by the laboratory. The vial-specific weight is recorded on the vial and an additional label should not be placed over the recorded weight or used.
- A representative sample of the media must be collected for laboratory measurement of moisture content determination as the laboratory reports VOC results on a dry-weight basis. Samples for moisture content determinations are placed in unpreserved sample jars.
- If compositing or homogenization of the sample is required, place discrete samples of equal amounts directly into the same container.
- Remove gravel, stones, foreign materials, and large pieces of organic material such as leaves and roots from samples.

Soil samples for chemical analysis will be collected as follows:

1. Samples collected for VOC or gasoline-range petroleum hydrocarbon analysis will be taken immediately after the soil is exposed (i.e., directly from the probe sleeve or auger split spoon, excavation side wall, hand auger, etc.).
2. A coring device will be used so the structure of the sample is maintained. The coring device should be inserted directly into the freshly exposed soil, sediment, or solid sample. The coring device should be able to extrude the sample in a plug, thus preserving the soil structure. VOCs samples should be kept intact and not be broken apart.
3. Using a Terra Core™ coring device with laboratory-supplied pre-preserved VOC kits:
    a. Push the hollow, open ended chamber directly into the freshly exposed sample media until the sample chamber is filled. Make sure the plunger top is flush with the top of the sampler handle.
    b. Remove excess material that extends beyond the mouth of the Terra Core™ until the sample material is flush with the mouth of the sampler. A filled chamber will deliver approximately 5 or 10 grams of soil, dependent on the coring device or project requirements.

   c. Wipe soil or debris from the outside of the Terra Core™ sampler and rotate the plunger 90° until it is aligned with the side slots of the sampler handle.
   d. Place the mouth of the Terra Core™ into a pre-preserved 40-ml VOC vial.
   e. Push the plunger down to extrude the sample from the mouth of the sampler.
   f. Remove any material or debris from the top and/or threads of the vial with a clean paper towel and quickly place the cap back on the 40-ml VOC vial.
   g. Repeat a) to f) for each preserved container to be submitted to the laboratory.
   h. Once the preserved containers are filled, fill the unpreserved sample jar with enough soil to allow the laboratory to run for a dry weight analysis.
4. Using an En Core® Sampler with no field preservation:
   a. Samples must be delivered to the lab for preservation within 48 hours of sample collection for the laboratory to place the unpreserved sample into the appropriate preservative.
   b. En Cores® must be used with a T-Handle and/or Extrusion tool obtained from the manufacturer.
   c. Open the package and remove the En Core® sampler from the package. Remove the cap from the sampler.
   d. Turn the T-Handle with "T" upright and coring body downward to position the plunger bottom flush with bottom of coring body (ensure that the plunger bottom is in position).
   e. Lock the sampler into the T-Handle by depressing the locking lever on the En Core® T-Handle and place the coring body, plunger end first, into open end of T-Handle, aligning the slots on the coring body with the locking pins in the T-Handle.
   f. Using the T-Handle, push the sampler into the medium until the coring body is completely full. When the coring body is full, the small o-ring will be centered in T-Handle viewing hole.
   g. Remove the En Core® from the sample source material. Wipe excess material from coring body exterior.
   h. Cap the coring body while still on the T-handle. Push the cap over flat area of ridge and twist to lock cap in place to lock the pins into the slots. Double check to ensure the En Core® sampler is locked into place.
   i. Remove the capped sampler by depressing the locking lever on the T-Handle while twisting and pulling sampler from the T-Handle
   j. Place the filled and capped sampler back into the labeled sample bag.
   k. Report "b" to "h" so at least three samplers are filled per sample depth or location.
   l. Fill the unpreserved sample jar with enough soil to allow the laboratory to run for a dry weight analysis.
5. Collect additional sample media for remaining chemical analysis in appropriate sample jars.
6. Place all soil samples immediately in a cooler containing ice.
7. Complete the chain of custody noting sample identification, time, date, analytical testing required, quality control samples, and any other notes that would be useful to a laboratory. (For instance, if a sheen is observed in the sample, note on the chain of custody. This may assist the laboratory in preventing potential instrument issues.)
8. Place, package, and ship the appropriately labeled sample containers to the subcontracted laboratory following the guidelines provided in SOP-04 Field Documentation and SOP-05 Sample Management and Shipping.
9. Discard additional sample media in accordance with the project work plan and in accordance with SOP-07 Investigative Derived Waste.

1.2 Sampler Devices, Limitations, and Exceptions

The Terra Core™ sampler is a single-use, plastic transfer tool, designed to take samples and transfer them to the appropriate containers for in-field chemical preservation. The Terra Core™ syringe has a hollow, open-ended chamber for sample plug collection and uses a plunger to extrude the sample material, in the field, into vials containing preservative (water, sodium bisulfate, and/or methanol).

The hand held En Core® sampling device is a hollow, open-ended chamber for cylindrical sample plug collection that is sealed, locked, labelled and shipped to the laboratory for chemical preservation (done by the laboratory) prior to analysis. The En Core® sampler is a single-use collection device designed to hold and samples with no headspace for subsequent laboratory preservation and analysis (purge and trap method).

The En Core sampler uses a Viton® o-rings to provide a hermetic seal that prevents losses of volatiles due to evaporation. However, due to potential microbial degradation, samples must be transferred to a medium that will inhibit degradation (such as sodium bisulfate or methanol) or frozen at -12° C within 48 hours of collection.

Certain soil/sediment/waste types may not be sufficiently consolidated for collection using an En Core® or Terra Core™ sampler. Examples include dry sand, very soft/fatty and moist clays, or sludges/sediments with a very high moisture content. If sufficient consolidation cannot be achieved using the sample, pull back the plunger of the sampler, lock the plunger, and hold the opening upward. Collect the soil sample by a decontaminated stainless steel spoon or disposable spatula and transfer the sample into the chamber until filled to the appropriate volume (e.g., 5 or 10 grams). Samples collected using this method should be noted on the Chain of Custody so the laboratory can process these samples with additional caution.

2.0 RECORDS

Field notes will be kept in a bound field logbook or approved field documentation following the format specified in SOP-04 Field Documentation. Field notebooks and field documentation should be used to record:

- Sample Identification
- Sample time and date
- Media collected
- Sample location
- Sample testing methods
- Location and identification of quality control samples and types
- Chain of custody forms.

ATTACHMENT A TERRA CORE™ MANUFACTURER SAMPLING PROCEDURES

ATTACHMENT B EN CORE® MANUFACTURER SAMPLING PROCEDURES

Disposable En Core® Sampler

En Novative Technologies, Inc.
1795 Industrial Drive
Green Bay, WI 54302
Phone: 920-465-3960 • Fax: 920-465-3963
Toll Free: 888-411-0757
www.ennovativetech.com

Sampling Procedures

Using The En Core® T-Handle

NOTE:

1. En Core® Sampler is a SINGLE USE device. It cannot be cleaned and/or reused.

2. En Core® Sampler is designed to store soil. Do not use En Core Sampler to store solvent or free product!

3. En Core® Sampler must be used with En Core® T-Handle and/or En Core® Extrusion Tool exclusively. (These items are sold separately.)

En Core®

Top

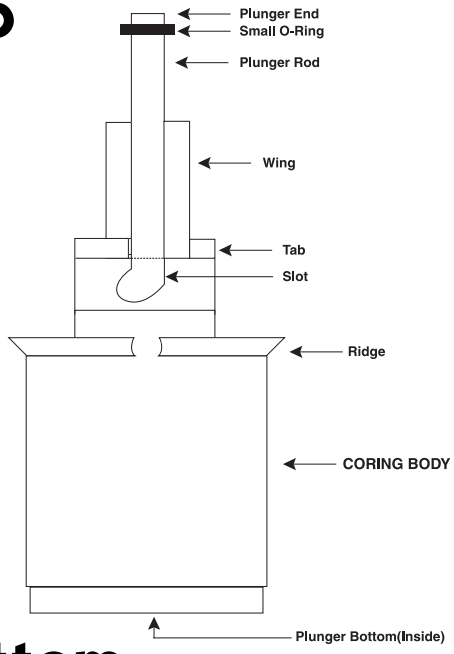

Bottom

En Core® T-Handle

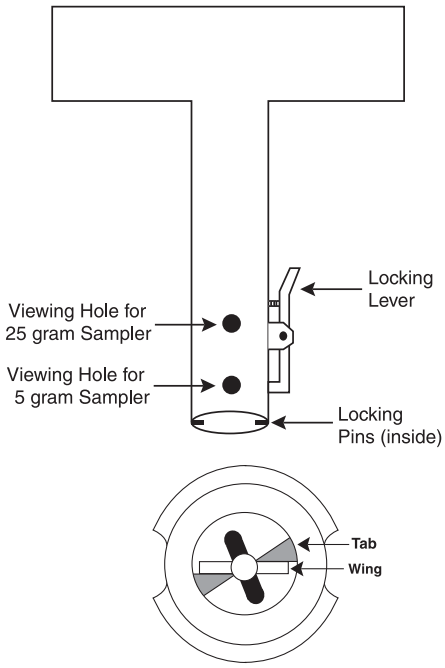

Sampler Correctly Capped

(Locking arm grooves seated over coring body ridge.)

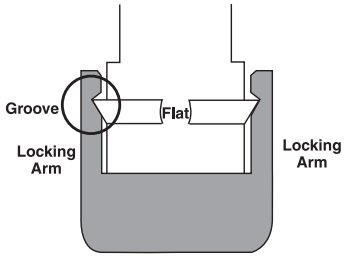

Sampler Incorrectly Capped

(Cap appears crooked; locking arm grooves not fully seated over coring body ridge.)

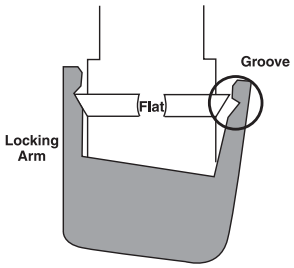

BEFORE TAKING SAMPLE:

1. Hold **coring body** and push **plunger rod** down until **small o-ring** rests against **tabs**. This will assure that plunger moves freely.

2. Depress **locking lever** on En Core T-Handle. Place coring body, **plunger end first,** into open end of T-Handle, *aligning the (2)* ***slots*** *on the coring body with the (2)* ***locking pins*** *in the T-Handle*. Twist coring body clockwise to lock pins in slots. Check to ensure Sampler is locked in place. Sampler is ready for use.

TAKING SAMPLE:

3. Turn T-Handle with T-up and coring body down. This positions plunger bottom flush with bottom of coring body (ensure that plunger bottom is in position). Using T-Handle, push Sampler into soil until coring body is completely full. When full, small o-ring will be centered in T-Handle **viewing hole**. Remove Sampler from soil. Wipe excess soil from coring body exterior.

4. Cap coring body while it is still on T-handle. *Push* **cap** over **flat** area of **ridge** *and twist* to lock **cap** in place. **CAP MUST BE SEATED TO SEAL SAMPLER (see diagram)**.

PREPARING SAMPLER FOR SHIPMENT:

5. Remove the capped Sampler by depressing locking lever on T-Handle while twisting and pulling Sampler from T-Handle.

6. Lock plunger by rotating extended plunger rod fully counter-clockwise until **wings** rest firmly against tabs (see plunger diagram).

7. Attach completed tear-off label (from En Core Sampler bag) to cap on coring body.

8. Return full En Core Sampler to zipper bag. Seal bag and put on ice.

Disposable En Core® Sampler

EXTRUSION PROCEDURES

USING THE En Core® EXTRUSION TOOL

CAUTION! Always use the Extrusion Tool to extrude soil from the En Core Sampler. If the Extrusion Tool is not used, the Sampler may fragment, causing injury.

1. To attach En Core Sampler to En Core Extrusion Tool: Depress locking lever on Extrusion Tool and place Sampler, plunger end first, into open end of Extrusion Tool, aligning slots on coring body with pins in Extrusion Tool. Turn coring body clockwise until it locks into place. Release locking lever.

2. Rotate and gently push Extrusion Tool plunger knob clockwise until plunger slides over wings of coring body. (When properly positioned plunger will not rotate further.)

3. Hold Extrusion Tool with capped Sampler pointed upward so soil does not fall out when cap is removed. Remove cap from Sampler by rotating cap until locking arms are aligned with the flat area of ridge and pull cap off. To release soil core push down on plunger knob of En Core Extrusion Tool. Remove and properly dispose of En Core Sampler.

Warranty and Disclaimers

IMPORTANT: FAILURE TO USE THE EN CORE® SAMPLER IN COMPLIANCE WITH THE WRITTEN INSTRUCTIONS PROVIDED HEREIN VOIDS ALL EXPRESS AND IMPLIED WARRANTIES, INCLUDING WARRANTY OF MERCHANTABILITY AND FITNESS FOR A PARTICULAR PURPOSE.

PRINCIPLE OF USE. The En Core Sampler Cartridge System is a volumetric sampling system designed to collect, store and deliver a soil sample. The En Core Sampler comes in two sizes for sample volumes of approximately 25 or 5 grams. There are four components: the cartridge with a movable plunger; a cap with two locking arms; a T-handle (purchased separately); and an extrusion handle (purchased separately). NOTE: The En Core Sampler is designed to store soil. It is not designed to store solvent or free product.

The soil is stored in a sealed headspace-free state. The seals are achieved by three special Viton® * o-rings, two located on the plunger and one on the cap of the Sampler. At no time and under no condition should these o-rings be removed or disturbed.

QUALITY CONTROL. The cartridge is sealed in an airtight package to prevent contamination prior to use. Due to the stringent quality control requirements associated with the use of this system, the disposable cartridge is designed to be used only once.

WARRANTY. En Novative Technologies, Inc. ("En Novative Technologies") warrants that the En Core Sampler shall perform consistent with the research conducted under En Novative Technologies' approval, within thirty (30) days from the date of delivery, provided that the Customer gives En Novative Technologies prompt notice of any defect or failure to perform and satisfactory proof thereof. THIS WARRANTY DOES NOT APPLY TO THE FOLLOWING, AS SOLELY DETERMINED BY EN NOVATIVE TECHNOLOGIES: (a) Damage caused by accident, abuse, mishandling or dropping; (b)Samplers that have been opened, taken apart or mishandled; (c)Samplers not used in accordance with the directions; and (d)Damages exceeding the cost of the sampler. Seller warrants that all En Core Samplers shall be free from defects in title. THE FOREGOING WARRANTIES ARE IN LIEU OF ALL OTHER WARRANTIES, WHETHER ORAL, WRITTEN, EXPRESSED, IMPLIED OR STATUTORY, INCLUDING ANY INFORMATION PROVIDED BY SALES REPRESENTATIVES OR IN MARKETING LITERATURE. IMPLIED WARRANTIES OF FITNESS AND MERCHANTABILITY SHALL NOT APPLY. En Novative Technologies' warranty obligations and Customer's remedies, except as to title, are solely and exclusively as stated herein.

LIMITATION OF LIABILITY. IN NO EVENT SHALL EN NOVATIVE TECHNOLOGIES BE LIABLE FOR ANTICIPATED PROFITS, INCIDENTAL, SPECIAL OR CONSEQUENTIAL DAMAGES, INCLUDING, BUT NOT LIMITED TO, DAMAGES FOR LOSS OF REVENUE, DOWN TIME, REMEDIATION ACTIVITIES, REMOBILIZATION OR RESAMPLING, COST OF CAPITAL, SERVICE INTERRUPTION OR FAILURE OF SUPPLY, LIABILITY OF CUSTOMER TO A THIRD PARTY, OR FOR LABOR, OVERHEAD, TRANSPORTATION, SUBSTITUTE SUPPLY SOURCES OR ANY OTHER EXPENSE, DAMAGE OR LOSS, INCLUDING PERSONAL INJURY OR PROPERTY DAMAGE. En Novative Technologies' liability on any claim of any kind shall be replacement of the En Core Sampler or refund of the purchase price. En Novative Technologies shall not be liable for penalties of any description whatsoever. In the event the En Core Sampler will be utilized by Customer on behalf of a third party, such third party shall not occupy the position of a third-party beneficiary of the obligation or warranty provided by En Novative Technologies, and no such third party shall have the right to enforce same. All claims must be brought within one (1) year of shipment, regardless of their nature.

En Novative Technologies, Inc.
1795 Industrial Drive
Green Bay, WI 54302
Phone: 920-465-3960 • Fax: 920-465-3963
Toll Free: 888-411-0757
www.ennovativetech.com

The En Core™ Sampler is covered by One or More of the Following U.S. Patents: 5,343,771; 5,505,098; 5,517,868; 5,522,271. Other U.S. and Foreign Patents Pending.

* Viton® is a registered trademark of DuPont Dow Elastomers.

En Novative Technologies, Inc.

Recommended Use Of The Terra Core®

NOTE: The Terra Core® Sampler is a single use device. It cannot be cleaned and/or reused.

Step 1

Have ready a 40ml glass VOA vial containing the appropriate preservative. With the plunger seated in the handle, push the Terra Core® into freshly exposed soil until the sample chamber is filled. A filled chamber will deliver approximately 5 or 10 grams of soil.

Step 2

Wipe all soil or debris from the outside of the Terra Core® sampler. The soil plug should be flush with the mouth of the sampler. Remove any excess soil that extends beyond the mouth of the sampler.

Step 3

Rotate the plunger that was seated in the handle top 90° until it is aligned with the slots in the body. Place the mouth of the sampler into the 40ml VOA vial containing the appropriate preservative and extrude the sample by pushing the plunger down. Quickly place the lid back on the 40ml VOA vial. **Note:** When capping the 40ml VOA vial, be sure to remove any soil or debris from the top and/or threads of the vial.

En Novative Technologies, Inc. • 1795 Industrial Drive • Green Bay, WI 54302 • www.ennovativetech.com
Phone: 920-465-3960 • Toll Free: 888-411-0757 • Fax: 920-465-3963

SOIL SAMPLE COLLECTION FOR PHYSICAL TESTING

PURPOSE

The purpose of this SOP is to provide guidance related to field sampling procedures for collection of disturbed and undisturbed soil samples for physical testing properties. This SOP does not cover all field collection methods for physical soil testing (e.g., various cone penetrometer methods). This SOP concentrates on the more commonly used soil collection methods (e.g., Shelby tube) not addressed in other SOPs.

This SOP includes physical soil sample labelling and sample management and shipping as the requirements differ from those described in SOP-04 Field Documentation and SOP-05 Sample Management and Shipping which generally focus on samples collected for chemical analysis.

Relevant EHS Support SOPs

- SOP-04 Field Documentation
- SOP-05 Sample Management and Shipping
- SOP-07 Investigation Derived Waste
- SOP-08 Field Equipment Operation and Calibration
- SOP-24 Hand Auger
- SOP-25 Drilling Method using Direct Push Technology
- SOP-26 Drilling Method using Hollow Stem Auger
- SOP-27 Drilling Method using Sonic
- SOP-28 Drilling Method using Rotary
- SOP-29 Rock Coring
- SOP-30 Field Classification and Description of Soil
- SOP-31 Field Classification and Description of Rock

Attachments

- Attachment A General Measurement Sizes of Shelby Tubes
- Attachment B Example of Common Physical Testing Methods and Holding Times

Required Materials

- Air monitoring instrumentation (e.g., PID) and supplies
- Field logbook and field documentation
- Site plan showing borehole locations
- Health and Safety Plan
- Indelible ink pens and waterproof marking pen
- Tape measure
- Duct tape
- Paper towels or hand wipes
- Camera
- Decontamination supplies
- Chain of Custody
- Shovel, trowel, or appropriate hand tool
- Appropriate sample containers, coolers, plastic baggies buckets, liners or sleeves
- Appropriate packing material, shipping containers,
- Soil logging charts, Munsell soil color charts, pocket penetrometer.

1.0 SOIL SAMPLE COLLECTION FOR PHYSICAL TESTING

Soil or rock sampling for physical testing (also referred to as geotechnical samples) is performed to obtain information on the physical properties of soil and rock. Soil and rock physical properties are used, among many, to design earthworks and foundations for proposed structures, for repair of distress to earthworks and structures caused by subsurface conditions, to provide information for chemical transport in groundwater, or design a remediation system. Subsurface exploration usually involves soil or rock sampling and laboratory tests of the soil samples retrieved. Generally, physical soil or rock samples are collected and tested by various testing procedures approved by the American Society of Testing and Materials International (ASTM), the American Petroleum Institute (API), or American Association of State Highway and Transportation Officials (AASHTO).

Sample Collection and Analysis Caution: Laboratories that conduct physical soil testing require soil or rock samples to be submitted as "clean." Samples should be collected from background locations from non-contaminated areas or from locations that have had chemical analysis to indicate the soil and rock samples are not contaminated. Physical testing laboratories require "clean" samples as:

- The laboratory cleans machinery or equipment with water and a mild cleaner, if required. A contaminated sample may damage or interfere with the equipment.
- Laboratory personnel may not be required to wear nitrile gloves to handle a sample.
- The laboratory is not equipped to dispose of samples that are contaminated (i.e., no hazardous waste containment, storage, or disposal methods).
- Contamination may interfere with the result of the testing (e.g., hydrocarbons impacts test results such as Organic Content testing).

It is everyone's responsibility be aware of the chemical versus physical nature of the soil properties during an investigation. If contamination is suspected or encountered during collection of physical soil or rock samples, the field personnel should consult with the Project Manager to determine appropriate actions. If contaminated samples are to be tested for physical properties, the laboratory should be notified in advance.

1.1 Soil Sampler Types

Soil samples are often categorized as "disturbed" or "undisturbed." A disturbed soil sample is one in which the structure of the soil has been changed sufficiently that geophysical testing of structural properties of the soil will not be representative of in-situ conditions. An undisturbed sample is one where the condition of the soil in the sample is close enough to the conditions of the soil in-situ to allow tests of structural properties of the soil to be used to approximate the properties of the soil in-situ.

Soil samples are taken using a variety of sampler types; some provide only disturbed samples, while others can provide relatively undisturbed samples. An outline of the common soil sampler types used in collection of soil samples for physical testing is included in the below **Table 1**.

Table 1 – Common Soil Sampler Types for Physical Properties Analysis

Sampler Name	Disturbed / Undisturbed	Appropriate Soil Types	Method of Penetration	Lab Sample Container	% Used
Split-Spoon (SS)	D	Sand, silt, clay	Hammer	Jar, Plastic baggie	85
Continuous Flight Auger	D	Cohesive soil	Rotation of hollow stem	Jar, Plastic baggie	<1
Bulk	D	Gravel, sand, silt, clay	Hand tools, bucket auger	Jar, Plastic baggie	<1
Modified California	D	Gravel, sand, silt, clay	Hammer (large diameter SS)	Jar, Plastic baggie, tube	<1
Direct Push	D or U	Sand, silt, clay	Hydraulic with plastic sleeve	Liner	4
Shelby Tube	U	Clay, silt or fine-grained soil mix	Mechanically pushed	Thin-walled sampler	6
Piston	U	Silt, clay	Hydraulic push	Thin walled sampler	1
Pitcher	U	Stiff to hard clay, silt, sand, partially weathered rock, frozen or resin impregnated granular soil	Rotation and hydraulic pressure	Thin walled sampler	<1
Denison	U	Stiff to hard clay, silt, sand, partially weathered rock	Rotation and hydraulic pressure	Liner	<1
Block	U	Cohesive soil, frozen or resin impregnated granular soil	Hand auger	Liner	<1

1.1.1 Disturbed Soil Sampler Types

Hand Auger: The hand auger consists of a short bucket with a cutting edge attached to a rod and handle. The sampler is advanced by a combination of manual rotation and downward force. The soils enter the bucket of the auger and once filled, the sampler is retrieved. The selected soil sample is taken from the bucket and placed into the appropriate sample container for physical properties analysis. SOP-24 Hand Auger should be referenced for the details regarding how the hand auger sampler is advanced and how the sampler and representative soil samples are retrieved.

Continuous Flight Auger: Continuous flight augers act as a corkscrew during advancement into the ground and subsurface soils are lifted as the augers are advanced. Soil is retained on the blades of the auger and once brought to the surface the soil is collected from the auger, and placed into the appropriate sample container for physical soil testing. SOP-26 Drilling Method Using Hollow Stem Auger should be referenced for details regarding hollow stem auger drill rigs and the advancement of the flight augers.

Shovel, Trowel, or other hand tool: Bulk soil samples are obtained by digging or collecting soil from the ground and placing it into the appropriate sample container.

Split-spoon/SPT Sampler: The split-spoon sampler is used in the 'Standard Test Method for Standard Penetration Test (SPT) and Split-Barrel Sampling of Soils' (ASTM D 1586) – in-situ soil testing methods. This thick-walled sampler is typically an 18- to 30-inches long, 2.0-inch outside diameter (OD) hollow tube split in half, lengthwise. The sampler is driven into the ground with a mechanically driven hammer. The blow counts (hammer strikes) are recorded during advancement of the sampler. The soil sample selected for laboratory analysis are collected from the sampler and placed into the appropriate sample container. The description of the split-spoon sampler, equipment used to drive the sampler, and blow count procedures should be referenced in SOP-21 Soil Sample Collection Methods and SOP-26 Drilling Method Using Hollow Stem Auger.

Disturbed samples collected from a hand auger, continuous flight auger, hand tool, or split spoon sampler are generally submitted in a jar or plastic baggie. The jars or plastic baggies will be labeled with the following:

- Site name
- Sample ID and depth
- Date.

Modified California Sampler: The Modified California sampler is used in the *Standard Practice for Thick Wall, Ring-Lined, Split Barrel, Drive Sampling of Soils* (ASTM D 3550). The Modified California sampler barrel is an 18- to 24-inch long, 2- or 3-inch diameter hollow tube split in half lengthwise **(Figure 1)** that is outfitted with 6-inch (350 mm) long (aluminum, brass, or stainless steel) metal tubes. The sampler is advanced into the ground with a mechanically driven hammer.

Figure 1 – Modified California Sampler and Split-Spoon Sampler Lined with Tubes

Direct Push: Soil samples are collected into 4- or 5-foot long plastic liners that are placed in a solid metal casing that has been driven into the ground using a hydraulic push. Once the sampler has been brought to the surface, the soil sample liner is removed from the casing. The soil sample selected for laboratory analysis is determined and that portion of the sample liner is cut away with a saw crosswise from the remaining length of liner. SOP-25 Drilling Method Using Direct Push Technology should be reference for details regarding the advancement of the direct push technology, casing, and installation and removal of the sample liner.

The selected tubes or section of the direct push sample liner sent in for physical soil testing will be:

1. Duct taped, or end caps will be duct taped to the each end of the tube or liner.
2. The tubes or liners will be labeled with the following:
   a. Site name
   b. Sample ID and depth

c. Date
d. Up direction
e. Recovery, if required.

1.1.2 Undisturbed Sampler Types

Shelby Tube Sampler: The Shelby tube sampler is generally the most-commonly used in the 'Standard Practice for Thin-Walled Tube Sampling of Soils for Geotechnical Purposes' (ASTM D 1587). Common Shelby Tube sizes and accessories are included as **Attachment A**. The Shelby tube sampler consists of a thin-walled (gauge) tube with a cutting edge at the toe. The sampler head attaches the tube to the drill rig's drill rod. The top of the sampler contains a check valve and pressure vents (**Figure 2**). The check valve creates a vacuum and the cohesion of the sample in the tube cause the sample to be retained when the tube is withdrawn. The Shelby tube is pushed into the soil by hydraulic pressure and spun to shear off the base.

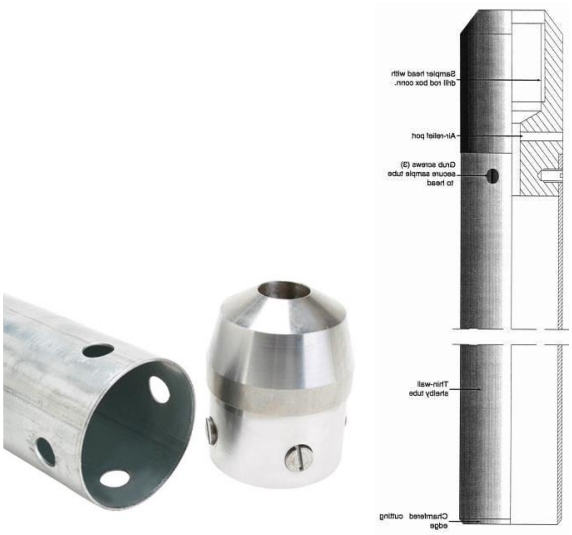

Figure 2 – Top of Shelby Tube and Shelby Tube

Shelby tubes are better suited for cohesive soils. Shelby tubes should not be used in collection of gravelly soils, hard soils, or bedrock, as the thin-wall of the Shelby tube will be crushed.

The Shelby tubes are constructed to meet the ASTM Standard for dimensions. ASTM allows other diameters as long as they are proportional to the standardized tube designs, and the tube length is suited for field conditions. The standard ASTM dimension for Shelby tubes are:

- 2-inch OD, 36-inch long, 18-gauge thickness;
- 3-inch OD, 36-inch long, 16-gauge thickness; and
- 5-inch OD, 54-inch long, 11-gauge thickness.

Piston samplers: A floating or fixed piston sampler is a thin-walled metal tube that has the same standard dimensions as the Shelby tube and contains a piston. The piston is positioned at the bottom of the thin-wall tube while the sampler is lowered to the bottom of the hole. The piston is locked in place on top of the soil to be sampled. These samplers will return undisturbed samples in soft soils, but are difficult to advance in sands and stiff clays, and can be damaged (compromising the sample) if gravel, hard soils, or bedrock is encountered. A variation of the piston sampler is the Livingston corer that has a serrated coring head that allows for rotation to cut through subsurface vegetable matter (e.g., small roots or buried twigs).

Pitcher Barrel sampler: The pitcher barrel sampler is similar to piston sampler, except that there is no piston. There are pressure-relief holes near the top of the sampler to prevent pressure buildup of water or air above the soil sample.

1.1.3 Shelby Tube Sample Collection Procedures

1. The drilling contractor will require a propane torch, or equivalent, to melt wax in a pan if wax is being used to seal the tube. The heat should be turned down low on the torch to prevent burning the wax but warm enough to keep the wax molten.
2. Measure the length and diameter of the Shelby tube and record the information in the field logbook or field documentation.
3. Advance the borehole to the top of the sample depth. Once the depth to the top the sample is reached, the drilling contractor will clean out the hole to remove any soil in the hole to the best extent practicable.
4. The center drill rods will be removed by the drilling contractor. The drilling contractor will replace the center drill rod plug with a Shelby head adapter. The Shelby tube will be placed on the Shelby adapter so the holes can be matched. A lock bolt will be inserted through the matching holes and fasten the washer and nut on the bolt.
5. The Shelby tube will be lowered into the open borehole until the Shelby tube reaches the bottom of the borehole (top of the sample depth).
6. The drilling contractor will use hydraulic force to push the Shelby tube into the soil. The total depth pushed will not exceed the length of the Shelby tube. For instance, if the Shelby tube length is 36 inches, the drilling subcontractor will push the Shelby tube 32 inches.
7. Once the Shelby tube depth has been acquired, the drilling contractor will rotate the drill stem slightly to shear off the soil trapped in the Shelby tube from the formation.
8. The distance the driller has pushed the Shelby tube should be observed and noted. Any encountered issues should be noted during the advancement of the Shelby tube.
9. The drilling contractor will retrieve the Shelby tube from the ground and remove the Shelby tube from the head adapter.
10. Use a putty knife or similar to clean off the lower portion of the soil from the lower end of the Shelby tube. If needed, remove about 0.25 inches (1 centimeter) of soil from the inside of the Shelby tube to allow for wax to seal the inside of the tube.
11. Clean off the outside and inside of the Shelby tube so the wax will seal to the metal.
12. Measure the length of soil recovery in the Shelby tube and record.
13. If an O-ring expansion cap is being used to seal the Shelby tube instead of a wax seal, one O-ring cap will be placed at the top and bottom of the Shelby tube.
14. If an O-ring expansion cap is not available, seal the top and bottom of the tube with wax to prevent moisture loss. Spoon or pour the wax over both ends. Be sure that both ends are completely coated. Preferably the wax should be applied in two stages; the first filling about 0.1 inch (5 mm) of the cavity, the second about 5 minutes later with about the same coating thickness. Thicker coats or additional coats may be required to fully seal the soil in the Shelby tube.
15. Allow the wax to cool.
16. Duct tape the O-ring caps or wax seals, or place end caps over each end of the Shelby tube and duct tape the end caps.
17. The tubes will be labeled with the following:
    a. Site name
    b. Sample ID and depth
    c. Date
    d. Up direction
    e. Recovery.

1.2 Rock Cores

The most common method for obtaining rock samples is generally diamond core drilling or sonic drilling. This SOP assumes a rock core sample is obtained for submittal of laboratory analysis. Rock core collection methods can be referenced in SOP-29 Rock Coring.

Rock cores selected for laboratory analysis of physical testing should be:

1. Wrapped in a series of plastic wrap and aluminum foil, or as outlined in the project work plan.
2. The rock sample should be labeled with the following:
   a. Site name
   b. Sample ID and depth
   c. Date
   d. Up direction.

1.3 Sample Management and Shipping

- Complete the chain of custody for the analytical testing required per the project work plan. An example of a Physical Sample Chain of Custody is included as an attachment in SOP-04 Field Documentation.
- Soil and rock samples submitted for physical analysis are not generally required to be placed on ice. Soil and rock samples should be kept out of direct sunlight or from freezing. Alternative management and shipping methodology should be outlined in the project work plan, if samples are to be, for instance, placed on ice or frozen.
- Holding times are not a requirement for most tests; however, changes can occur to the sample over time that may affect test results. An example of a physical sample laboratory-supplied holding times is included as **Attachment B**.
- Undisturbed soil samples should be transported and stored so that that the moisture content is maintained as close as possible to the natural conditions.
- Shelby tubes should be stored in an upright position with the top side of the sample up. Long-term storage of soil samples in Shelby tubes is not recommended. As storage time increases, moisture will migrate within the tube, and there is an increased chance of corrosion.
- Be aware of the weight of soil and rock samples and the containers used to ship the samples. Several containers may be better than one large, extra heavy container.
- Shipment of a 3-foot long Shelby tube may be better placed individually in map containers (FEDEX triangular box).
- Packaging should include bubble wrap, bunched newspaper, or any packaging that minimize the stress to the soil during shipment.

2.0 RECORDS

Field notes will be kept in a bound field logbook or approved field documentation following the format specified in the project work plan, SOP-04 Field Documentation, or as described in this SOP. Specific documentation may include health and safety documentation, a boring log, and photographs. Detailed records will be maintained during sampling activities, particularly with respect to location, depth, lithology, recovery, and measurements obtained from field monitoring equipment. Required records include:

- Required site maps and HASP forms
- Utility clearance documentation
- Instrument calibration
- Drilling equipment used
- Description of sampler type
- Sample collection and laboratory submittal information (chain of custody)
- Weather observations (e.g., temperature, wind speed, cloud coverage)
- Any problems encountered or deviations from this SOP
- Summary of daily activities and personnel onsite.

ATTACHMENT A GENERAL MEASUREMENT SIZES OF SHELBY TUBES

Various Shelby Tubes (top) come in a wide range of diameters, require Set Screws (center) & are available for Pitcher Barrel Samplers as well (bottom).

Shelby Tube (Thinwall) Samplers & Accessories – are available from USExploration Equipment Company in Steel, Brass and Galvanized. The "push style" sampler recovers "in-situ" samples in 2-inch (51mm), 2-1/2-inch (63.5mm), 3-inch (76.2mm) and 5-inch (127mm) diameters. Easily capped and sent to the lab for analysis, this long standing ASTM approved sampling tool has experienced resurgence as a result of heightened awareness of environmental issues. Sampler assemblies or extra Tubes, Heads, Cap (Set) Screws, Bee's Wax (Slabs) and Plastic Caps are all available from our stock...

Shelby Tube Diameter	Shelby Tube Length	Shelby Tube Material	Special Feature	Assembly Weight	Assembly Part Number
2-inch (51mm)	30-inch (762mm)	Steel	Standard Wall	3-Pounds (1.4 kg)	26194
2-1/2-inch (63.5mm)	30-inch (762mm)	Steel	Standard Wall	4-Pounds (1.8 kg)	26204
3-inch (76.2mm)	24-inch (610mm)	Steel	Standard Wall	5-Pounds (2.3 kg)	26195
3-inch (76.2mm)	30-inch (762mm)	Steel	Standard Wall	5-Pounds (2.3 kg)	26015
3-inch (76.2mm)	30-inch (762mm)	Steel	Heavy Wall	6-Pounds (2.7 kg)	26015-HD
3-inch (76.2mm)	30-inch (762mm)	Galvanized	Standard Wall	5-Pounds (2.3 kg)	26000
3-inch (76.2mm)	36-inch (915mm)	Steel	Standard Wall	6-Pounds (2.7 kg)	26196
5-inch (127mm)	36-inch (915mm)	Steel	Standard Wall		26197

SOIL SAMPLING – Shelby Tube Samplers

Shelby Tube Head with Drill Rod Connection	Fits Shelby Tube Diameter	Number of Set Screws	Assembly Weight	Assembly Part Number
AW	2-inch (51mm)	4-Set Screws	6-Pounds (2.7 kg)	26209
AWJ	2-inch (51mm)	4-Set Screws	6-Pounds (2.7 kg)	26198
AW	2-1/2-inch (63.5mm)	4-Set Screws	8-Pounds (3.6kg)	26199
AWJ	2-1/2-inch (63.5mm)	4-Set Screws	8-Pounds (3.6kg)	26200
AW	3-inch (76.2mm)	4-Set Screws	9-Pounds (4.1 kg)	26016
AWJ	3-inch (76.2mm)	4-Set Screws	9-Pounds (4.1 kg)	26017
AWJ	3-inch (76.2mm)	4-Set Screws	9-Pounds (4.1 kg)	26017-HD
NW	3-inch (76.2mm)	4-Set Screws	9-Pounds (4.1 kg)	26203
NWJ	3-inch (76.2mm)	4-Set Screws	9-Pounds (4.1 kg)	26202
NW	5-inch (127mm)	4-Set Screws	9-Pounds (4.1 kg)	26205
NWJ	5-inch (127mm)	4-Set Screws	9-Pounds (4.1 kg)	26201

Soft Plastic Caps Fit Shelby Tube Diameter	Number Required Per Shelby Tube	Assembly Part Number
2-inch (51mm)	2-Required	26206
2-1/2-inch (63.5mm)	2-Required	26208
3-inch (76.2mm)	2-Required	26019
5-inch (127mm)	2-Required	26207

Soil Seals with Expandable Rubber O-Ring Fit Shelby Tube Diameter	Number Required Per Shelby Tube	Assembly Part Number
2-inch (51mm)	2-Required	26213
2-1/2-inch (63.5mm)	2-Required	26214
3-inch (76.2mm)	2-Required	26152
5-inch (127mm)	2-Required	26153

Set Screws Fit Shelby Tube Diameter	Number Required Per Head Assembly	Assembly Part Number
2-inch (51mm)	4-Required	26210
2-1/2-inch (63.5mm)	4-Required	26212
3-inch (76.2mm)	4-Required	26018
5-inch (127mm)	4-Required	26211

Bee's Wax	Assembly Weight	Assembly Part Number
Slab Wrapped in Wax Paper	11-Pounds (5 kg)	26135

ATTACHMENT B EXAMPLE OF COMMON PHYSICAL TESTING METHODS AND HOLDING TIMES

Summary of Sample Containers, Preservatives and Holding Time Requirements

Test Type	Geotechnical Parameters	Method Reference	Container				Minimum Sample Required	Holding Time (f)
			Water	Soil	Sediment	Other		
Index	Atterberg Limits	ASTM D4318	--	Plastic Bag		--	4 oz.	--
	Bulk Density (Wet/Dry Density)	ASTM D7263/ EPA 9100/ ASTM E1109	--	Core or Bag		--	4 oz.	--
	Bulk Density of Aggregate	ASTM C29	--	Bag or Bucket	--	--	Varies with Particle Size	
	Carbonate Determination	ASTM D4373	--	Plastic Bag		--	2 oz.	--
	Core Logging		--	Core		--	Core	--
	Extrusion of Shelby Tube Samples		--	Core		--	Core	--
	Grain Size (Gradation)	PSEP - Sieve/Pipette	--	Plastic Bag		--	7 oz.	6 months
		Sieve/ Hydrometer ASTM D421/422	--	Plastic Bag		--	8 oz.	--
		Sieve Only ASTM D422/C136	--	Plastic Bag		--	4 oz.	--
		Sieve Coarse Aggregate ASTM C136	--	Bag or Bucket		--	Varies with Particle Size	--
		% Fines Wet Wash ASTM D1140	--	Plastic Bag		--	4 oz.	--
		Gravel Sand Silt Clay Fractions PSEP/ASTM	--	Plastic Bag		--	7 oz.	6 months
		Salt Correction for PSEP grsz only	--	--	Plastic Bag	--		--
		Sedigraph	--	--	Plastic Bag	--	1 g	--
		Laser Diffraction - Ecology TAPE	2 ea 500ml HDPE	--	--	--	1L	7 Days
		Laser Diffraction - PSD Only	500ml HDPE	--	--	--	250 ml	--
	Moisture Content	ASTM D2216	--	Plastic Bag		--	2 oz.	--
	Organic Matter - Loss on Ignition (LOI)	ASTM D2974	--	Plastic Bag	--	--	2 oz.	--
	Soil Classification	ASTM D2487	--	Plastic Bag		--	16 oz.	--
	Specific Gravity	ASTM D854	--	Plastic Bag		--	4 oz,	--
	Specific Gravity of Coarse Aggregate	ASTM C127/C128	--	Bag or Bucket	--	--	Varies with Particle Size	--
	Porosity	API RP40/ EPA 9100	--	Core, Bag, Jar		--	8 oz	--
		EM-1110-2-1906	--	Core, Bag, Jar		--	8 oz	--
	Soil Resistivity	AASHTO T288	--	Plastic Bag	--	--	16 oz	--
	Specific Gravity of Liquids	ASTM D1298 or D891	500 ml HDPE	--	--	--	500 ml	--
	Sediment Concentration in Water	ASTM D3977	500 ml HDPE	--	--	--	500 ml HDPE	7 days
	Specific Yield/ Centrifuge Moisture Equivalent	ASTM D425	--	Plastic Bag		--	1 oz	--
Strength	CBR (California Bearing Ratio) Three points varying compactive effort	ASTM D1883	--	5 gal bucket	--	--	Full Bucket	--

Summary of Sample Containers, Preservatives and Holding Time Requirements

Test Type	Geotechnical Parameters	Method Reference	Container				Minimum Sample Required	Holding Time (f)
			Water	Soil	Sediment	Other		
Strength	Proctor Standard/Modified	ASTM D698/1557	--	5 gal bucket	--	--	Full Bucket	--
	Collapse Potential	ASTM D5333	--	Core		--	Height: Diameter= 1.5x2.6in	--
	Consolidation	ASTM D2435 Method B	--	Core		--	Height: Diameter= 2x2.85in	--
	Expansion Index	ASTM D4829	--	Plastic Bag		--	64 oz	--
	Swell, One Dimensional	ASTM D4546	--	Core		--	Height: Diameter= 1.5x2.6in	--
	Triaxial Compressive Strength	QU, Unconfined Compression ASTM D2166	--	Core		--	Height: Diameter Ratio = 2:1	--
		UU, Unconsolidated - Undrained, ASTM D2850	--	Core		--	Height: Diameter Ratio = 2:1	--
		CU, Consolidated- Undrained, ASTM D4767	--	3 Cores		--	Three 2:1 cores	--
		CU, Consolidated- Undrained, USBR 5750	--	1 Core		--	One 2:1 core	--
Permeability and Contaminant Transport	Hydraulic Conductivity (Permeability)	Rigid Wall, ASTM D2434	--	--	--	Sand-Core, Bag	Height: Diameter = 1.5:1	--
		Flex Wall, ASTM D5084	--	Core or Bag		--	Core min 1inx1in	--
	Effective Porosity	Rigid Wall	--	--	--	Sand- Core	Height :Diameter = 1.5:1	--
		Flex Wall	--	Core		--	Core min 1inx1in	--
	Column Leach Test	ASTM D4874	--	--	Ask Lab	--	64 oz.	--
	Microtoxicity	Ecology 100% Method	--	--	2 ea 32 oz. glass	--	2 ea 32 oz	14 days
		Serial Dilutions ASTM D5660	--	--	2 ea 32 oz. glass	--	2 ea 32 oz	14 days
USACE	USACE Dredge Material Testing	Column Settling	25 gal site water	--	5 gal bucket	--	25 gal site water / 5 gal sed	--
		DRET - Dredge Elutriate	Site Water	--	WMG	--	1 L site water / 10 g dry wt	Dependent On Chemistry Requested
		SET - Standard Elutriate	Site Water	--	WMG	--	Sed : Water = 1:4	Dependent On Chemistry Requested
		MET - Modified Elutriate	Site Water	--	WMG	--	1 L site water/ 150g dry wt	Dependent On Chemistry Requested
		Self Weight Consolidation	Site Water	--	5 gal buckets	--	6L site water / 2L solids	--
		SBLT, Sequential Batch Leach Test	Site Water	--	WMG	--	Sed : Water = 1:4	Dependent On Chemistry Requested
		PCLT, Pancake Leach Test	Site Water	--	WMG jars, Teflon bags	--	30L site water / 150 oz sed,	Dependent On Chemistry Requested
	Pore Water Extraction	Modified EPA-823-B-01-002 Methods	--	--	32 oz WMG (estimated)	--	Need enough sed to yield minimum pore water for requested analysis	7 days to extract, then 7 days to analyze

HAND AUGER

PURPOSE

The purpose of this SOP is to describe the procedures for using a hand auger to collect soil or sediment samples in subsurface investigations. Hand augers are also a commonly used tool in clearance of subsurface utility location.

Relevant EHS Support SOPs

- SOP-02 Site Visit and Reconnaissance
- SOP-03 Utility Clearance
- SOP-04 Field Documentation
- SOP-06 Pre-Field Mobilization
- SOP-07 Investigation Derived Waste
- SOP-08 Field Equipment Operation and Calibration
- SOP-09 Equipment Decontamination
- SOP-20 Organic Vapor Monitoring in Soil
- SOP-21 Soil Sample Collection Methods
- SOP-22 Soil Sampling for Chemical Analysis
- SOP-23 Soil Sampling for Physical Analysis
- SOP-30 Field Classification and Description of Soil
- SOP-32 Borehole and Well Abandonment.

Required Materials

- Air monitoring instrumentation (e.g., PID, FID) and supplies
- Field logbook and field documentation
- Site plan showing borehole locations
- Health and Safety Plan (HASP)
- Appropriate personal protective equipment (PPE)
- Indelible ink pens and waterproof marking pen
- Hand auger with stainless steel bucket, extension rods, and T-handle
- Pipe wrenches
- Tape measure
- Paper towels or hand wipes
- Decontamination supplies
- If applicable, appropriate sample containers, sampling kits, labels, coolers, ice, tape, plastic baggies, chain of custody forms
- Soil logging charts, Munsell soil color charts, pocket penetrometer.

1.0 HAND AUGER

Hand auger types include bucket type, continuous flight (screw), and post-hole augers. For the purpose of this SOP, only bucket type augers will be discussed.

Hand augers (bucket augers) are better for direct sample recovery because they provide a large volume of sample in a short time. Hand auger equipment generally comes with a "T" handle, extension rods, and a rotating cylindrical bucket. A hand auger system is shown in **Figure 1**.

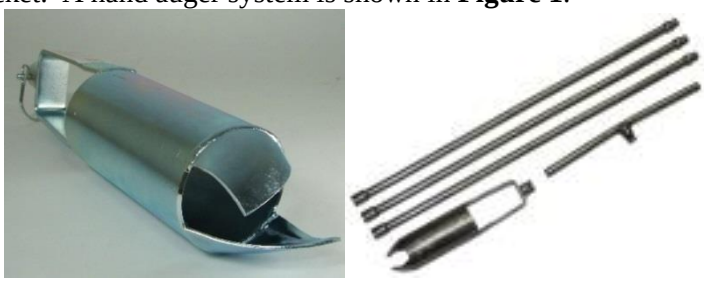

Figure 1 Auger Bucket (left) and Hand Auger Components

(cross-handle, bucket, and extension rods).

A hand auger system is used to obtain samples usually from a depth of up to 6 feet; however, in under some conditions deeper depths may be achieved. Actual maximum depth depends on the soil type, buried obstructions, and groundwater levels. Generally, the borehole cannot be advanced below the water table because the hole collapses. A hand auger typically cuts a hole 3 to 9 inches in diameter.

1.1 Hand Auger Advancement Procedures

Before beginning borehole advancement:

- The guidelines provided in SOP-02 Site Visit and Reconnaissance and SOP-06 Pre-Field Mobilization should be considered in order to prepare for investigation activities.
- Borehole locations should be surveyed and staked, if required. The State One-Call Utility locate service will be notified for any subsurface work. Utility clearance will be conducted in accordance with the procedures outlined in SOP-03 Utility Clearance.
- Field monitoring equipment used in conjunction with this SOP will be calibrated in accordance with the guidelines provided in SOP-08 Field Equipment Operation and Calibration.
- Borehole advancement and sampling equipment has been decontaminated in accordance with the guidelines provided in SOP-09 Equipment Decontamination.

1. Assemble the bucket, extension rod(s), and cross-handle. Extension rods are available in 2- to 5-foot (1- to 2-meter) sections and can be added as needed. If an extension needs to be added when using an auger and rods with a threaded connection, two pipe wrenches will be required to loosen and tighten the assembly.
2. Choose the proper bucket auger for the soil type. For example, a closed bucket auger is better suited for sandy soil and an open-sided bucket works well for clayey soil.
3. Ensure the auger bucket and rods are properly decontaminated.
4. Remove all surface vegetation from the sample location with a hand trowel or another decontaminated tool (e.g., shovel).

5. Grip the cross-handle with both hands and twist it clockwise to advance the auger. Four to six turns are usually sufficient to fill the auger bucket. When the entire auger bucket is filled, remove the auger from the soil by lifting it straight up.
6. Remove the soil from the bucket auger using a spoon or similar tool and log the soils in accordance with the guidelines provided in SOP-30 Field Classification and Description of Soil. Monitor for the presence of volatile organics, if required, in accordance with the guidelines provided in SOP-20 Organic Vapor Monitoring in Soil.
7. Measure the depth of the hole occasionally with a tape measure to accurately determine the depth of the borehole.
8. Continue to auger to the desired depth and periodically empty the auger bucket as needed. Auger to the desired sampling depth (i.e., just above the sampling interval).
9. Withdraw the auger from the borehole. Detach the auger bucket from the auger stem and attach a clean, decontaminated auger, or decontaminate the original auger bucket.
10. Place the auger bucket back in the borehole and lower it carefully to avoid contact with the sidewalls of the borehole.
11. Auger down and retrieve a soil sample from the next or desired depth.
12. If required, collect soils as outlined in the project work plan or in accordance with SOP-22 Soil Sampling for Chemical Analysis and SOP-23 Soil Sampling for Physical Analysis.
13. Repeat the hand auger advancement process (Steps 5 to 11) if collecting additional samples at various depths.
14. Investigative derived wastes will be disposed in a manner that is consistent with procedures in the project work plan or the guidelines provided in SOP-07 Investigative Derived Waste.
15. Abandon the borehole according to applicable federal, state, county, or local regulations and SOP-32 Borehole and Well Abandonment. Boreholes will be filled with the abandonment materials up to the land surface and completed as per the project work plan.
16. The borehole location and site will be cleaned (ground washed if necessary) and surface conditions will be restored as per the project work plans. The rig geologist/engineer will inspect the site to ensure post-drilling site conditions comply with the project work plan.
17. Photographs of the site location or soil conditions might be required. Photographs and a photographic log will be maintained in accordance with SOP-04 Field Documentation.

2.0 RECORDS

Field notes will be kept in a bound field logbook or approved field documentation following the format specified in SOP-04 Field Documentation. Detailed records will be maintained during sampling activities, particularly with respect to location, depth, color, odor, lithology, hydrogeologic characteristics, and readings derived from field monitoring equipment. Required records include:

- Required site maps and HASP forms
- Utility clearance documentation
- Instrument calibration
- Borehole location (sketches) and identification
- Date
- Description of sampler
- Borehole advancement requirements (soil logging, soil vapor monitoring, recovery, observations of staining or odor, total depth, etc.)
- Any problems encountered.
- Weather conditions (e.g., temperature, wind speed, sunny or cloudy sky)
- Sample collection for analytical testing (sample ID, depth interval, analytical requirement, quality control samples)
- Abandonment method
- Summary of daily activities and personnel onsite.

FIELD CLASSIFICATION AND DESCRIPTION OF SOIL

PURPOSE

The purpose of this SOP is to establish a methodology to be used to classify and record soil lithology and complete the EHS Support Boring Log with field-encountered geological, geotechnical, physical, and chemical observations. This objective is to establish a consistent method for completing the description of soil from field sampling efforts and entry into borehole logs. Consistency with description is important because multiple employees may be involved at different times in a project history and being able to compare between logs that were created by different field personnel.

Relevant EHS Support SOPs

- SOP-04 Feld Documentation
- SOP-05 Sample Management and Shipping
- SOP-21 Soil Sample Collection Methods
- SOP-24 Hand Auger
- SOP-25 Drilling Methods using Direct Push Technology
- SOP-26 Drilling Methods using Hollow Stem Auger
- SOP-27 Drilling Methods using Sonic
- SOP-28 Drilling Methods using Rotary Methods
- SOP-62 Sediment Sampling.

Attachments

- Attachment A EHS Support Boring Log Form
- Attachment B ASTM D2488-00 Standard Practice for Description and Identification of Soils (Visual-Manual Procedure)
- Attachment C Soil Classification Field Guides
  - Unified Soil Classification System Chart
  - Johnson Screen Field Guide.

Required Materials

- Air monitoring instrumentation (e.g., PID) and supplies
- Field logbook and field documentation
- Site maps, site layouts, site plans
- Health and Safety Plan (HASP)
- Appropriate personal protective equipment (PPE)
- Black waterproof and/or indelible ink pens
- Stainless steel bowls and pans, if applicable
- Tape measure
- Paper towels or hand wipes
- Squirt bottles with water
- Camera
- Soil logging charts, Munsell soil color charts, pocket penetrometer.

1.0 LITHOLOGICAL DESCRIPTION

The objective of classifying soil or sediment is to document details of the soil or sediment samples to reconstruct the borehole's stratigraphy, which can then be correlated with similar data from other boreholes to produce geological and hydrogeological cross sections, or provide information that may be useful to investigations. Details collected include soil type, color, grain size variation, grain characteristics, staining, odor, moisture content, plasticity, blow counts, soil sample interval, soil recovery, and sample numbers. These details are generally recorded on a soil boring log and/or a field log book. The EHS Support Boring Log is included as **Attachment A**.

1.1 Unified Soil Classification System of Soil

This SOP is based on the Unified Soil Classification System (USCS), the American Society for Testing and Materials International (ASTM) Standard D2488 Standard Practice for Description and Identification of Soils (Visual-Manual Procedure) and ASTM D1586 Standard Test Method for Penetration Test and Split-Barrel Soil Sampling. The USCS is based on numerical values of certain soil properties measured by laboratory tests (ASTM D2487). A copy of the ASTM D2488 guideline from 2000 is included as **Attachment B**. Note this version of the ASTM D2488-00 is not the most recent version as published in 2009; however, the 2000 version of the USCS field testing methods for identification of soil properties remains unchanged.

Field logger and personnel should familiarize themselves with the ASTM D2488 and use field guides **(Attachment C)** for reference. The guidelines and methodology (described in the next sections) are provided to assist in proper field visual descriptions of soils. These guidelines may not be applicable to every soil sample, but should provide enough guidance to allow accurate and defensible descriptions by a variety of geologists or field personnel.

1.1.1 Color

Color should be described as the basic color of a soil, such as brown, gray, or red. The color term can be modified, as necessary, by adjectives such as light, dark, mottled, or by a modifiers (e.g., greenish, brownish). As an alternative, the Munsell soil color chart designation may be used in addition to the color designation. Some color considerations:

- Black soil color usually indicates the presence of organic matter.
- Red soil colors generally indicate the presence of free iron oxides—common in well-oxidized soil. Removal of free iron under reducing conditions usually results in the soil mineral grains usually appear gray or bluish gray in color. Note staining, iron staining, or mottling. This information might be useful for establishing water table fluctuations or contamination.
- Mottling is indicative of soil that has experienced, or is experiencing, conditions that affect the soil color. It is customary to list the dominant color first, followed by a description of abundance, contrast, and size of other colors in the mottled pattern (e.g., black with faint, fine orange mottles). Mottling in soil may indicate clues to depositional environments, groundwater fluctuations, or contaminant transport. Mottling is described in terms of three characteristics:
    - Abundance (few, common, many),
    - Contrast (faint, distinct, prominent), and
    - Size (fine, medium, coarse).

1.1.2 Grain Size

The size gradation of a soil sample is determined through visual means for coarse-grained soils (gravel- or sand-sized soil particles) and through field tests and manual test methods for fine-grained soils (silt- or clay-sized soil particles). The boundaries for grain size are as follows:

Gravel: Particles that pass a 3-inch (75-mm) sieve and is retained on a No. 4 (4.75-mm) sieve with the following subdivisions:

- Coarse gravel passes a 3-inch (75-mm) sieve and is retained on a 3/4-inch (19 mm) sieve
- Fine gravel passes a 3/4-inch (19-mm) sieve and is retained on a No. 4 (4.75-mm) sieve.

Sand: Particles that pass a No. 4 (0.19-inch or 4.75-mm) sieve and is retained on a No. 200 (0.003-inch or 75-µm) sieve with the following subdivisions:

- Coarse sand passes a No. 4 (0.19-inch or 4.75-mm) sieve and is retained on a No. 10 (0.08-inch or 2-mm) sieve
- Medium sand passes a No. 10 (0.08-inch or 2-mm) sieve and is retained on a No. 40 (0.017-inch or 425-µm) sieve
- Fine sand passes a No. 40 (0.017-inch or 425-µm) sieve and is retained on a No. 200 (0.003-inch or 75-µm) sieve.

Silt: Soil passing a No. 200 (0.003-inch or 75-µm) sieve that is non-plastic or very slightly plastic (elastic) and that exhibits little or no strength when air-dried. Silt usually has a texture similar to flour.

Clay: Soil passing a No. 200 (0.003 inch or 75-µm) sieve that can be made to exhibit plasticity within a range of water contents and that exhibits considerable strength when air-dried. Individual clay particles are not visible to the naked eye.

Size gradation should be used to describe any particle noted in the sample. For instance, if concrete is encountered in a sample, a description of coarse sand sized concrete should be used.

1.1.3 Group Name and Group Symbol

The USCS classifies soils based on the percentage of grain-size, texture, and liquid limits. The system consists of 15 soil groups, each identified by a two-letter symbol. The major divisions within the USCS (the first letter in each two-letter symbol) denote particle size: coarse-grained soils are sands (S) and gravels (G); fine-grained soils are silts (M) and clays (C). In coarse-grained soils, the second letter in the classification refers to the grading (sorting) of the soils. A well-graded (poorly sorted) (W) sand or gravel has a wide range of particle sizes and substantial amounts of particles sized between the coarsest and finest grains. A poorly graded (well-sorted) (P) sand or gravel consists predominately of one size. In fine-grained soils, the silts and clays are further subdivided in terms of liquid limits, with (L) indicating soils with low liquid limits and (H) representing soils with high liquid limits.

The basic name of a soil should be identical to the ASTM D2488 Group Name, based on visual estimates of gradation and plasticity, and should be capitalized. The soil is coarse-grained if it contains less than 50% fine, and fine-grained if it contains 50% or more fines. Once this preliminary classification has been made, more detailed identification will be performed in order to place the sample into a USCS group. The group names are shown on charts included in **Appendices B and C**.

If qualifiers for soil description are expressed as a percentage, the description can be estimated by the following criteria shown in **Table 1**.

Table 1 – Criteria

Description	Percentage
Trace	< 5%
Few	5 to 10%
With	5 to 15%
Little	15 to 25%
Some	30 to 45%

1.1.4 Physical Characteristics of a Coarse-Grained Soil

The gradation of coarse-grained soil (more than 50 percent retained on No. 200 sieve) is included in the specific soil name in accordance with ASTM D2488. For a coarse-grained soil, identify:

- If the soils are well-graded or poorly graded
- The gradation of the particle size (fine-, medium- or coarse-graded)
- The maximum size of the particles
- The angularity or roundedness.

Split spoon samplers and small-diameter core tools are not always representative of coarse-grained strata (i.e., those with grain sizes of a diameter greater than the diameter of the particular coring apparatus used). Check with the driller, the driller's logs, and soil cuttings for boulders, cobbles, gravels, and similar that may be encountered during advancement of the boring to identify if larger-grained soils may be present.

1.1.4.1 Angularity

The angularity of the coarse-sized grained particles (i.e., sand, gravel, cobbles, and boulders) as angular, subangular, subrounded, or rounded are described with the following criteria:

- Angular particles have sharp edges and relatively planar sides with unpolished surfaces.
- Subangular particles are similar to angular description, but have rounded edges.
- Subrounded particles have nearly plane sides but have well-rounded corners and edges.
- Rounded particles have smoothly curved sides and no edges.

1.1.4.2 Cementation

If an intact coarse-grained soil exhibits cementation, cementation is described with the following criteria:

- Weak – crumbles or breaks with handling or little finger pressure
- Moderate – crumbles or breaks with considerable finger pressure
- Strong – will not crumble or break with finger pressure.

1.1.5 Physical Characteristics of a Fine-Grained Soil

The gradation of fine-grained soil (less than 50 percent retained on No. 200 sieve) is included in the specific soil name in accordance with ASTM D2488. Fine-grained soils (cohesive soils), because the primary constituents are not visible, are typically classified through manual field tests.

1.1.5.1 Dry Strength

Dry strength is the ease with which a dry lump of soil crushes between the fingers. The field procedures to assess dry strength is as follows:

1. Obtain enough soil material to mold into a ball about 1 inch (25 mm) in diameter. Mold the material until it has the consistency of putty, adding water if necessary.
2. Mold at least three samples of the material to about ½ inch (12 mm) in diameter. Allow the test specimen to dry in air, or sun, or by artificial means, as long as the temperature does not exceed 140° F (60° C).
3. If the test specimen contains natural dry lumps, those that are about ½ inch (12 mm) in diameter may be used in place of the molded balls. Note: the process of molding and drying usually produces higher strengths than in natural dry lumps of soil.
4. Test the strength of the dry balls or lumps by crushing between the fingers. If natural dry lumps are used, do not use the results of any of the lumps that are found to contain coarse sand.
5. The strength can be estimated by the following criteria provided in **Table 2**.

Table 2 – Strength Criteria

Description	Criteria
None	The dry specimen crumbles into powder with mere pressure of handling.
Low	The dry specimen crumbles into powder with some finger pressure.
Medium	The dry specimen breaks into pieces or crumbles with considerable finger pressure.
High	The dry specimen cannot be broken with finger pressure. Specimen will break into pieces between thumb and a hard surface.
Very High	The dry specimen cannot be broken between the thumb and a hard surface.

1.1.5.2 Plasticity

Plasticity is the extent to which a soil may be rolled into a 1/8-inch (3 mm) thread, and re-rolled when drier than the plastic limit. Soil moisture affects plasticity: higher moisture content yields higher plasticity. A soil sample with moderate moisture content (this may require adding water to the sample if it has dried out). The plasticity can be estimated by the following criteria provided in **Table 3**.

Table 3 – Plasticity Criteria

Description	Criteria
Non Plastic	A 1/8-inch (3-mm) thread cannot be rolled at any water content.
Low	The thread can barely be rolled and the lump cannot be formed when drier than the plastic limit.
Medium	The thread is easy to roll and not much time is required to reach the plastic limit. The thread cannot be re-rolled after reaching the plastic limit. The lump crumbles when drier than the plastic limit.
High	It takes considerable time rolling and kneading to reach the plastic limit. The thread can be re-rolled several times after reaching the plastic limit. The lump can be formed without crumbling when drier than the plastic limit.

1.1.5.3 Dilatancy

Dilatancy is the speed with which water appears in a moist pat of soil when shaking in the hand, and disappears while squeezing. The field procedures to assess dilatancy is as follows:

1. Select enough soil material to mold into a ball about 1 inch (25 mm) in diameter. Mold the material, adding water if necessary, until it has a soft, but not sticky, consistency.
2. Smooth the soil ball in the palm of one hand with the blade of a knife or small spatula.
3. Shake or strike the side of the hand vigorously against the other hand several times. Note the reaction of water appearing on the surface of the soil.

4. Squeeze the sample by closing the hand or pinching the soil between the fingers. The reaction of dilatancy is the speed with which water appears while shaking and disappears while squeezing. Upon completion of the test, if the specimen has a glassy, wet look, it is probably a silt, and if it has a dry look, it is probably a clay.
5. The dilatancy can be estimated by the following criteria provided in **Table 4**.

Table 4 – Dilatancy Criteria

Description	Criteria
None	No visible change in the specimen.
Slow	Water appears slowly on the surface of the specimen during shaking and does not disappear or disappears slowly upon squeezing.
Rapid	Water appears quickly on the surface of the specimen during shaking and disappears quickly upon squeezing.

1.1.5.4 Toughness

Toughness is the strength of a soil, moistened near the plastic limit, when rolled into a 1/8-inch (3 mm) diameter thread. The field procedures to assess toughness is as follows:

1. Following the dilatancy test, the soil specimen will be shaped into an elongated pat and rolled by hand on a smooth surface or between the palms into a thread about 1/8 inch. (3 mm) in diameter. If the sample is too wet to roll easily, it should be spread into a thin layer and allowed to lose some water by evaporation.
2. Fold the sample threads and reroll repeatedly until the thread crumbles at a diameter of about 1/8 inch (3 mm). The thread will crumble at a diameter of 1/8 inch (3 mm) when the soil is near the plastic limit.
3. After the thread crumbles, the pieces should be lumped together and kneaded until the lump crumbles.
4. If a thread cannot be rolled, it is probably a silt. If the specimen can be rolled into a thin thread, it is probably a clay. Note that some silts are plastic (i.e., able to be rolled into a thread, and sometimes referenced as elastic silt), so above generalization should be confirmed by other tests.
5. The toughness of the thread and lump can be estimated by the following criteria provided in **Table 5**.

Table 5 – Toughness Criteria

Description	Criteria
Low	Only slight pressure is required to roll the thread near the plastic limit. The thread and the lump are weak and soft.
Medium	Medium pressure is required to roll the thread to near the plastic limit. The thread and the lump have medium stiffness.
High	Considerable pressure is required to roll the thread to near the plastic limit. The thread and the lump have very high stiffness.

1.1.6 Organic Soils

Identify the soil as organic if the soil contains enough organic particles to influence the properties. Organic soils usually have a dark brown to black color and may have an organic odor. Some organic soils will lighten in color significantly when air-dried. Organic soils normally will not have a high toughness or plasticity. The thread for the toughness test will be spongy.

1.1.7 Relative Consistency or Density

Relative density of a coarse-grained (cohesionless) soil is based on N-values (blow counts) from the Standard Penetration Test (ASTM D1586). Relative density of coarse-grained soil (developed from Sowers 1979) can be estimated by the following criteria provided in **Table 6**.

Table 6 – Relative Density of Coarse-grained Soil Criteria

Blows/Foot	Relative Density	Field Test
< 4	Very Loose	Easily penetrated with 12-inch steel rod pushed by hand.
5-10	Loose	Easily penetrated with 1/2-inch steel rod pushed by hand.
11-30	Medium	Easily penetrated with 1/2-inch steel rod driven with 5-pound hammer.
31-50	Dense	Penetrate a foot with 1/2-inchsteel rod driven with 5-pound hammer.
> 50	Very Dense	Penetrate only a few inches with 12-inch steel rod driven with 5-pound hammer.

Consistency of fine-grained (cohesive) soil is properly based on results of pocket penetrometer or torvane results. In the absence of this information, consistency can be estimated from N-values from the Standard Penetration Test. Relationships for determining relative density. Consistency of fine-grained soils (developed from Sowers, 1979) can be estimated by the following criteria provided in **Table 7**.

Table 7 – Fine-grained Soil Consistency Criteria

Blows/Foot	Consistency	Pocket Penetrometer	Torvane	Field Test
		TSF	TSF	
< 2	Very Soft	< 0.25	< 0.12	Easily penetrated several inches by fist.
2-4	Soft	0.25-0.50	0.12-0.25	Easily penetrated several inches by thumb.
5-8	Firm or Medium Stiff	0.5-1.0	0.25-0.50	Penetrates several inches by thumb with moderate effort.
9-15	Stiff	1.0-2.0	0.50-1.0	Readily indented by thumb, but penetrated only with great effort.
16-30	Very Stiff	2.0-4.0	1.0-2.0	Readily indented by thumbnail.
> 31	Hard	> 4.0	> 2.0	Indented with difficulty with thumbnail.

If the presence of large gravel or disturbance of the sample makes determining the in situ relative density or consistency difficult, then omit this item from the description and explain it in the Notes column of the boring log. The presence of water (pore pressure) will affect the density or consistency of the soil and a Note should be recorded to indicate the value is below the water table.

1.1.8 Moisture Content

The degree of moisture present in a soil sample should be defined as dry, moist, or wet. Moisture content can be estimated by the following criteria provided in **Table 8**.

Table 8 – Moisture Content Criteria

Description	Criteria
Dry	Absence of moisture, dusty, dry to the touch.
Moist	Damp, but no visible water.
Wet	Visible free water, usually soil is below water table.

1.1.9 Structure

The structure of intact soils can be described by the following criteria provided in **Table 9**.

Table 9 – Structure of Intact Soils Criteria

Description	Criteria
Stratified	Alternating layers of varying materials or color with layers at least 6 mm thick. Note thickness.
Laminated	Alternating layers of varying materials or color with the layers less than 6 mm thick. Note thickness.
Fissured	Breaks along definite planes of fracture with little resistance to fracturing.
Slickenslided	Fracture planes appear polished or glossy, sometimes striated.
Blocky	Cohesive soil that can be broken down in small angular lumps that resist further breakdown.
Lensed	Inclusion of small pockets of different soils, such as small lenses of sand scattered through a mass of clay; note thickness.
Homogenous	Same color and appearance throughout.

2.0 BORING LOG COMPLETION

The details of the boring will be recorded on a boring log. The heading information will be completed for each log sheet and the technical items in each column must be addressed in the field, as applicable to the EHS Support Boring Log. This soil interpretation serves as guidance for the project teams to help assure that technically defensible and consistent data collection methods are used. The EHS Support Boring Log is included as **Attachment A**.

Soil descriptions shall be precise and comprehensive with enough detail to allow interpretation by the project geologist. The field logger shall strive to capture sufficient detail. The field logger and the project geologist will review completed logs for accuracy, clarity, and thoroughness.

2.1 Heading and Footing Information

The heading block portion of the soil boring field form contains general information regarding the advancement of the soil boring. Complete the heading block with all available information. If the item requested is not applicable (NA), then record NA in that box. Record the following information in the heading and footer block for each soil boring, as appropriate.

- Project Specific Information: Fill in the project site name, location, client, project number, and EHS Support Project Manager.
- Boring: Enter the boring identification or name. A numbering system should be chosen that does not conflict with information recorded from previous work at that site. Number the sheets consecutively for each boring.
- Site Sketch: Use this area to draw the boring location.
- Date Started/Date Finished: Enter the start date of subsurface advancement. Enter the finish date as the date work at the borehole ceased. This would include the date the borehole was no longer advanced, or the date the borehole was backfilled.
- Elevation and Coordinates: Enter the data or estimated data, if available during borehole advancement.
- Drilling Method and Equipment: Identify the drilling method (e.g., direct push technology, hollow stem auger), drilling equipment (e.g., CME-75, GeoProbe® 6620D), borehole diameter based on bit size and type (e.g., 4.25-inch inner diameter HSA, 3.25-inch cutting shoe), method of collecting the soils sample (e.g., split spoon sampler, acetate sleeve) and diameter of soil sample collector.
- Drilling Contractor: Enter the name of the drilling subcontractor, and the drilling subcontractor lead driller.
- Logger: Enter the name of the person logging the soils.
- Total Depth: Enter the deepest depth the boring was advanced.
- Water Level: Enter the depth below ground surface (bgs) to the static water level in the borehole, if encountered. If multiple water level measurements are taken for the boring, this field should list the last or most representative measurement. Frequent water measurements are recommended to capture differences between water-bearing zones, and to capture the stable water level, if encountered. If multiple water levels are recorded, record the information in the Notes column and/or in the footer section. If free water is not encountered during drilling, or cannot be detected because of the drilling method, make a note of this information and record NA in the footer section. Generally, water levels should be measured each morning before resuming drilling and at the completion of each boring.
- Page: Number the sheets consecutively if multiple boring log sheet are required. Multiple sheets should be number as page number of total number of pages (e.g., Page 1 of 4). If bedrock logging

sheets are used, continue the consecutive numbering on the bedrock log. A bedrock log is included as an Attachment in SOP-31 Field Classification and Description of Rock.

2.2 Technical Data

This information is contained in the main body of the boring log form and includes any columns not related to lithological description (i.e., does not include the lithological column or lithological description).

- Depth Below Surface. This column refers to the depth bgs. Depths should typically be recorded in feet or meters, unless very shallow soil borings are expected. The scale of the log may be adjusted as needed for the best and most accurate representation of the data. Use a depth scale that is appropriate for the sample spacing and for the complexity of subsurface conditions.
- Sample Number: The sample number refers to the consecutive number of samples collected throughout the depth of the soil boring. Each consecutive sample number should be recorded in the Sample Number column at the depth interval corresponding to where it was collected. Number samples consecutively regardless of the type of sampler used. Enter a sample number even if no material was recovered in the sampler.
- Sampler Type: The sampler type is an abbreviation of the method used to retrieve the soil sample. The sampler type description as provided in **Table 10** is a suggested standard but is not comprehensive of all sampler types.

Table 10 – Sampler Type

Sampler Type	Abbreviation
Acetate or PVC Sleeve or Liner	AS, AL
Macrocore	MC or AS
Split Spoon Sampler	SS
Shelby Tube (Thin-walled sampler)	ST or TW
Hand Auger	HA
Cone Penetrometer	CPT
Diamond Core	Core or BR

- Recovery: The recovery is a ratio of the length of soil recovered in a sampler to the length the sampler was advanced into the ground. Enter the recovery length as the depth recovered over the length pushed. For example, if a split spoon sampler is advanced 2 feet and the soil recovered measures 1.2 feet, record the information in the Recovery column as 1.2 / 2.
  An additional method is to record the recovery at the depth interval corresponding to where it was collected, and run a line demarking the upper depth and lower depth the sampler was pushed for the interval. For instance, if a split spoon sampler is pushed from 2 to 4 feet bgs and 1.2 feet of soil is recovered in that pushed interval, enter the recovery at 1.2 feet at a depth of 3 feet, and mark a horizontal line at 2 feet and 4 feet on the boring log.
  No recovery, sometimes abbreviated as “NR”, or loss of sample with no recovery will be recorded.
- Blow Counts: In this column, enter the number of blows required for each 6 inches of sampler penetration and the “N” value if the standard penetration test (SPT) is being used with a hollow-stem auger drill rig and thick-barreled sampler. The SPT will be conducted in accordance with the guidelines in ASTM D1586 Standard Test Method for Penetration Test and Split-Barrel Soil Sampling. The “N” value is the sum of the blows in the last two 6-inch penetration intervals when 3 penetration intervals are collected, or the sum of the blows in the middle two 6-inch penetration intervals when 4 penetration intervals are collected. A typical SPT involving successive blow counts of 2, 3, and 4 is recorded as 2-3-4 with a resulting “N” value of 7.

The SPT is terminated if the sampler encounters refusal. Refusal is a penetration of less than 6 inches with a blow count of 50. A partial penetration of 50 blows for 4 inches is recorded as 50'4". Standard penetration testing is further discussed in SOP-21 Soil Sample Collection Methods and SOP-26 Drilling Method Using Hollow Stem Auger.

- PID Field Scan and Headspace: In these columns, enter the results of conducting a field scan or headspace readings of the soils using a photoionization detector (PID). The specific PID reading should be recorded at the corresponding depth. Calibration and operation of a PID is included in SOP-08 Field Equipment Operation and Calibration. Various field methods for measurement of volatile organic compounds in soil samples is provided in SOP-20 Organic Vapor Monitoring in Soils.
- Pocket Penetrometer: In this column, enter the results of the pocket penetrometer reading. Record the reading at the corresponding depth.
- Notes: In this column, enter comments or notes about events occurring during the drilling process. Details that may be recorded include:
  - The date and the time drilling began and ended each day
  - Odor
  - Presence of roots or organic matter
  - Physical description of impacts (e.g., hydrocarbon, staining, quantity)
  - Analytical sample collection with time and date
  - Changes in drilling methods or equipment type
  - Equipment malfunction
  - The depth and size of casing and the method of installation
  - The date, time, and depth of water level measurements
  - Driller observations
  - Rod chatter, rod drops, and depth of occurrence
  - Depth and percentage of drilling fluid loss
  - Depth of hole caving or heaving
  - Results of any in-situ tests.
- End of Boring Data: After reaching the final depth of the boring, indicate on the Notes section if the boring was abandoned, the borehole had a well installed, or other. If the boring was abandoned, indicate the method of the abandonment (e.g., grout, bentonite chips). Borehole abandonment will be abandoned in accordance with SOP-32 Borehole and Well Abandonment. Well installation will be conducted with the guidelines provided in SOP-40 Well Installation and Design.

2.3 Soil Description

Soil descriptions must be recorded in the Lithologic Description column for every soil sample collected. Soil descriptions should be precise and comprehensive without being verbose. The correct overall impression of the soil should not be distorted by excessive emphasis on insignificant details. In general, similarities between consecutive samples, rather than differences, should be stressed.

The format and order for soil descriptions should be as follows:

1. Color
2. Soil name (synonymous with ASTM D2488 Group Name)
3. USCS Code for soil name
4. Relative density or consistency
5. Moisture content
6. Plasticity
7. Estimate particle size percentages of minor lithology
8. Additional fine grained descriptor (dry strength, dilatancy, toughness)

9. Other descriptors such as mottles, nodules, soil structure, mineralogy, organic content, bedding, contact information, cementations, etc.

The basic name of a soil should be identical to the ASTM D2488 Group Name, based on visual estimates of gradation and plasticity, and should be capitalized. Examples of acceptable USCS naming structure and lithological descriptions are illustrated by the following descriptions:

- A soil sample is visually estimated to contain 15% gravel, 55% sand, and 30% fines (passing No. 200 sieve). The fines are estimated as low plastic silt. This visual classification is SILTY SAND with gravel, with a Group Symbol of (SM). The gravel portion is included in the soil name because the percentage of gravel was estimated as 15%.
- A soil sample is visually estimated to contain 10% gravel, 30% sand, and 60% fines (passing the No. 200 sieve). The fines are estimated as low plastic silt. This visual classification is SANDY SILT. The gravel portion is not included in the soil name because the gravel portion was estimated as less than 15%. The Group Symbol is (ML).
- Brown to light gray, well-graded SAND (SW), medium dense, wet, mostly fine and medium sand, little coarse gravel, trace fines.
- Light greenish gray, SILT (ML), soft, wet, non plastic, some mica.
- Brown LEAN CLAY (CL), stiff, moist, medium plasticity, medium toughness, no dilatancy, trace fine gravel.

2.3.1 Odor

NEVER intentionally smell soil samples as this could result in exposure to volatile contaminants that may be present in the soil. If, however, an odor is noticed, it should be described if organic or unusual (e.g., petroleum product or chemical). Soils containing a significant amount of organic material usually have a distinctive odor of decaying vegetation (sometimes a hydrogen sulfide [rotten egg] smell). The project specific health and safety plan should then be consulted to determine the appropriate level of protection necessary to continue field work.

2.3.2 Fill Material

It is common to encounter fill material in soil borings. Fill represents any material that has been placed or modified by man. Fill material is generally identified by the occurrence of man-made materials such as concrete, brick, glass, plastic, wood, grease, or dredge spoils. If the soil being described consists of fill, the word “fill” may be included in the boring log; however, the field logger must give enough detail in the log for further interpretation (e.g., color, size of the fill particles, presence of clay, silt, sand, moisture content). Using “fill” with no other description is unacceptable.

2.3.3 Potentially Impacted Subsurface Material

Observations of potentially impacted subsurface material shall be recorded with extra attention to accuracy and detail, so as to allow for subsequent analysis. The log shall focus predominately on the physical conditions observed (i.e., not the origin or what the logger thinks the material is). These physical conditions may include color, distribution, odor, physical state (e.g., aqueous, solid, liquid other than water, emulsion). Observation of whether the impact is a trace or distributed throughout, and whether there are non-aqueous liquids on the soil grains, in secondary porosity, or in a blended semi-solid condition should be noted. The log shall indicate whether the impact is in fill material.

2.4 Review of Field Logs

Field soil boring logs shall be reviewed by the field logger at the conclusion of field efforts and corrected to incorporate information not available during logging. Examples of the type of data that may be added to the log include surveyor's results and soil lab testing (e.g., ASTM D422, ASTM D4318, and ASTM D2216).

3.0 RECORDS

Field notes will be kept in a bound field logbook or approved field documentation following the format specified in SOP-04 Field Documentation. Specific documentation may include health and safety documentation and photographs. Detailed records will be maintained, particularly with respect to location, depth, color, odor, lithology, hydrogeologic characteristics, and measurements obtained from field monitoring equipment. Required records include:

- Required site maps and HASP forms
- Utility clearance documentation
- Instrument calibration
- Borehole Log Form
- Sample chain of custody, if collected
- Weather observations (e.g., temperature, wind speed, cloud coverage)
- Any problems encountered or deviations from this SOP
- Summary of daily activities and personnel onsite.

ATTACHMENT A EHS SUPPORT BORING LOG

EHS Support consider it done

Boring:

Project / Site:		Sketch Map
Location / Address:		
Date Started:	Date Finished:	
Ground Surface Elevation (ft msl):	Top of Casing Elevation (ft msl):	
Coordinates:	Total Depth (ft):	
Drilling Method:	Borehole Diameter (in):	
Rig Type:	Casing Diameter (in) / Type:	Client:
Drilling Co.:	Sampler Diameter (in) / Type:	Project Number:
Drilled by:	Logged by:	EHS Support PM:

Elevation (ft msl)	Depth (ft)	Lithologic Column	Lithologic Description	Sample Number	Sampler Type	Recovery (ft)	Blow Counts	PID (ppm) Field Scan	PID (ppm) Headspace	Pocket Pen (tsf)	Notes
	0										
	1										
	2										
	3										
	4										
	5										
	6										
	7										
	8										
	9										
	10										
	11										
	12										
	13										
	14										
	15										
	16										

Notes:	Depth to water in borehole during drilling (ft bgs):_____ Depth to water after drilling (ft bTOC): _____	**Boring:** **Page:** EHS Support consider it done

ATTACHMENT B ASTM D2488-00

Standard Practice for Description and Identification of Soils (Visual-Manual Procedure)

Designation: D 2488 – 00

Standard Practice for Description and Identification of Soils (Visual-Manual Procedure)[1]

This standard is issued under the fixed designation D 2488; the number immediately following the designation indicates the year of original adoption or, in the case of revision, the year of last revision. A number in parentheses indicates the year of last reapproval. A superscript epsilon (ϵ) indicates an editorial change since the last revision or reapproval.

This standard has been approved for use by agencies of the Department of Defense.

1. Scope *

1.1 This practice covers procedures for the description of soils for engineering purposes.

1.2 This practice also describes a procedure for identifying soils, at the option of the user, based on the classification system described in Test Method D 2487. The identification is based on visual examination and manual tests. It must be clearly stated in reporting an identification that it is based on visual-manual procedures.

1.2.1 When precise classification of soils for engineering purposes is required, the procedures prescribed in Test Method D 2487 shall be used.

1.2.2 In this practice, the identification portion assigning a group symbol and name is limited to soil particles smaller than 3 in. (75 mm).

1.2.3 The identification portion of this practice is limited to naturally occurring soils (disturbed and undisturbed).

NOTE 1—This practice may be used as a descriptive system applied to such materials as shale, claystone, shells, crushed rock, etc. (see Appendix X2).

1.3 The descriptive information in this practice may be used with other soil classification systems or for materials other than naturally occurring soils.

1.4 The values stated in inch-pound units are to be regarded as the standard.

1.5 *This standard does not purport to address all of the safety problems, if any, associated with its use. It is the responsibility of the user of this standard to establish appropriate safety and health practices and determine the applicability of regulatory limitations prior to use.* For specific precautionary statements see Section 8.

1.6 *This practice offers a set of instructions for performing one or more specific operations. This document cannot replace education or experience and should be used in conjunction with professional judgment. Not all aspects of this practice may be applicable in all circumstances. This ASTM standard is not intended to represent or replace the standard of care by which the adequacy of a given professional service must be judged, nor should this document be applied without consideration of a project's many unique aspects. The word "Standard" in the title of this document means only that the document has been approved through the ASTM consensus process.*

2. Referenced Documents

2.1 *ASTM Standards:*

D 653 Terminology Relating to Soil, Rock, and Contained Fluids[2]

D 1452 Practice for Soil Investigation and Sampling by Auger Borings[2]

D 1586 Test Method for Penetration Test and Split-Barrel Sampling of Soils[2]

D 1587 Practice for Thin-Walled Tube Sampling of Soils[2]

D 2113 Practice for Diamond Core Drilling for Site Investigation[2]

D 2487 Classification of Soils for Engineering Purposes (Unified Soil Classification System)[2]

D 3740 Practice for Minimum Requirements for Agencies Engaged in the Testing and/or Inspection of Soil and rock as Used in Engineering Design and Construction[3]

D 4083 Practice for Description of Frozen Soils (Visual-Manual Procedure)[2]

3. Terminology

3.1 *Definitions*—Except as listed below, all definitions are in accordance with Terminology D 653.

NOTE 2—For particles retained on a 3-in. (75-mm) US standard sieve, the following definitions are suggested:
Cobbles—particles of rock that will pass a 12-in. (300-mm) square opening and be retained on a 3-in. (75-mm) sieve, and
Boulders—particles of rock that will not pass a 12-in. (300-mm) square opening.

3.1.1 *clay*—soil passing a No. 200 (75-µm) sieve that can be made to exhibit plasticity (putty-like properties) within a range of water contents, and that exhibits considerable strength when air-dry. For classification, a clay is a fine-grained soil, or the fine-grained portion of a soil, with a plasticity index equal to or greater than 4, and the plot of plasticity index versus liquid

[1] This practice is under the jurisdiction of ASTM Committee D-18 on Soil and Rock and is the direct responsibility of Subcommittee D18.07 on Identification and Classification of Soils.

Current edition approved Feb. 10, 2000. Published May 2000. Originally published as D 2488 – 66 T. Last previous edition D 2488 – 93ϵ1.

[2] *Annual Book of ASTM Standards*, Vol 04.08.

[3] *Annual Book of ASTM Standards*, Vol 04.09.

***A Summary of Changes section appears at the end of this standard.**

Copyright © ASTM, 100 Barr Harbor Drive, West Conshohocken, PA 19428-2959, United States.

limit falls on or above the "A" line (see Fig. 3 of Test Method D 2487).

3.1.2 *gravel*—particles of rock that will pass a 3-in. (75-mm) sieve and be retained on a No. 4 (4.75-mm) sieve with the following subdivisions:

coarse—passes a 3-in. (75-mm) sieve and is retained on a ¾-in. (19-mm) sieve.

fine—passes a ¾-in. (19-mm) sieve and is retained on a No. 4 (4.75-mm) sieve.

3.1.3 *organic clay*—a clay with sufficient organic content to influence the soil properties. For classification, an organic clay is a soil that would be classified as a clay, except that its liquid limit value after oven drying is less than 75 % of its liquid limit value before oven drying.

3.1.4 *organic silt*—a silt with sufficient organic content to influence the soil properties. For classification, an organic silt is a soil that would be classified as a silt except that its liquid limit value after oven drying is less than 75 % of its liquid limit value before oven drying.

3.1.5 *peat*—a soil composed primarily of vegetable tissue in various stages of decomposition usually with an organic odor, a dark brown to black color, a spongy consistency, and a texture ranging from fibrous to amorphous.

3.1.6 *sand*—particles of rock that will pass a No. 4 (4.75-mm) sieve and be retained on a No. 200 (75-µm) sieve with the following subdivisions:

coarse—passes a No. 4 (4.75-mm) sieve and is retained on a No. 10 (2.00-mm) sieve.

medium—passes a No. 10 (2.00-mm) sieve and is retained on a No. 40 (425-µm) sieve.

fine—passes a No. 40 (425-µm) sieve and is retained on a No. 200 (75-µm) sieve.

3.1.7 *silt*—soil passing a No. 200 (75-µm) sieve that is nonplastic or very slightly plastic and that exhibits little or no strength when air dry. For classification, a silt is a fine-grained soil, or the fine-grained portion of a soil, with a plasticity index less than 4, or the plot of plasticity index versus liquid limit falls below the "A" line (see Fig. 3 of Test Method D 2487).

4. Summary of Practice

4.1 Using visual examination and simple manual tests, this practice gives standardized criteria and procedures for describing and identifying soils.

4.2 The soil can be given an identification by assigning a group symbol(s) and name. The flow charts, Fig. 1a and Fig. 1b for fine-grained soils, and Fig. 2, for coarse-grained soils, can be used to assign the appropriate group symbol(s) and name. If the soil has properties which do not distinctly place it into a specific group, borderline symbols may be used, see Appendix X3.

NOTE 3—It is suggested that a distinction be made between *dual symbols* and *borderline symbols.*

Dual Symbol—A dual symbol is two symbols separated by a hyphen, for example, GP-GM, SW-SC, CL-ML used to indicate that the soil has been identified as having the properties of a classification in accordance with Test Method D 2487 where two symbols are required. Two symbols are required when the soil has between 5 and 12 % fines or when the liquid limit and plasticity index values plot in the CL-ML area of the plasticity chart.

Borderline Symbol—A borderline symbol is two symbols separated by a slash, for example, CL/CH, GM/SM, CL/ML. A borderline symbol should be used to indicate that the soil has been identified as having properties that do not distinctly place the soil into a specific group (see Appendix X3).

5. Significance and Use

5.1 The descriptive information required in this practice can be used to describe a soil to aid in the evaluation of its significant properties for engineering use.

5.2 The descriptive information required in this practice should be used to supplement the classification of a soil as determined by Test Method D 2487.

5.3 This practice may be used in identifying soils using the classification group symbols and names as prescribed in Test Method D 2487. Since the names and symbols used in this practice to identify the soils are the same as those used in Test Method D 2487, it shall be clearly stated in reports and all other appropriate documents, that the classification symbol and name are based on visual-manual procedures.

5.4 This practice is to be used not only for identification of soils in the field, but also in the office, laboratory, or wherever soil samples are inspected and described.

5.5 This practice has particular value in grouping similar soil samples so that only a minimum number of laboratory tests need be run for positive soil classification.

NOTE 4—The ability to describe and identify soils correctly is learned more readily under the guidance of experienced personnel, but it may also be acquired systematically by comparing numerical laboratory test results for typical soils of each type with their visual and manual characteristics.

5.6 When describing and identifying soil samples from a given boring, test pit, or group of borings or pits, it is not necessary to follow all of the procedures in this practice for every sample. Soils which appear to be similar can be grouped together; one sample completely described and identified with the others referred to as similar based on performing only a few of the descriptive and identification procedures described in this practice.

5.7 This practice may be used in combination with Practice D 4083 when working with frozen soils.

NOTE 5—Notwithstanding the statements on precision and bias contained in this standard: The precision of this test method is dependent on the competence of the personnel performing it and the suitability of the equipment and facilities used. Agencies that meet the criteria of Practice D 3740 are generally considered capable of competent and objective testing. Users of this test method are cautioned that compliance with Practice D 3740 does not in itself assure reliable testing. Reliable testing depends on several factors; Practice D 3740 provides a means for evaluating some of those factors.

6. Apparatus

6.1 *Required Apparatus*:

6.1.1 *Pocket Knife or Small Spatula*.

6.2 *Useful Auxiliary Apparatus*:

6.2.1 *Small Test Tube and Stopper* (or jar with a lid).

6.2.2 *Small Hand Lens*.

7. Reagents

7.1 *Purity of Water*—Unless otherwise indicated, references to water shall be understood to mean water from a city water

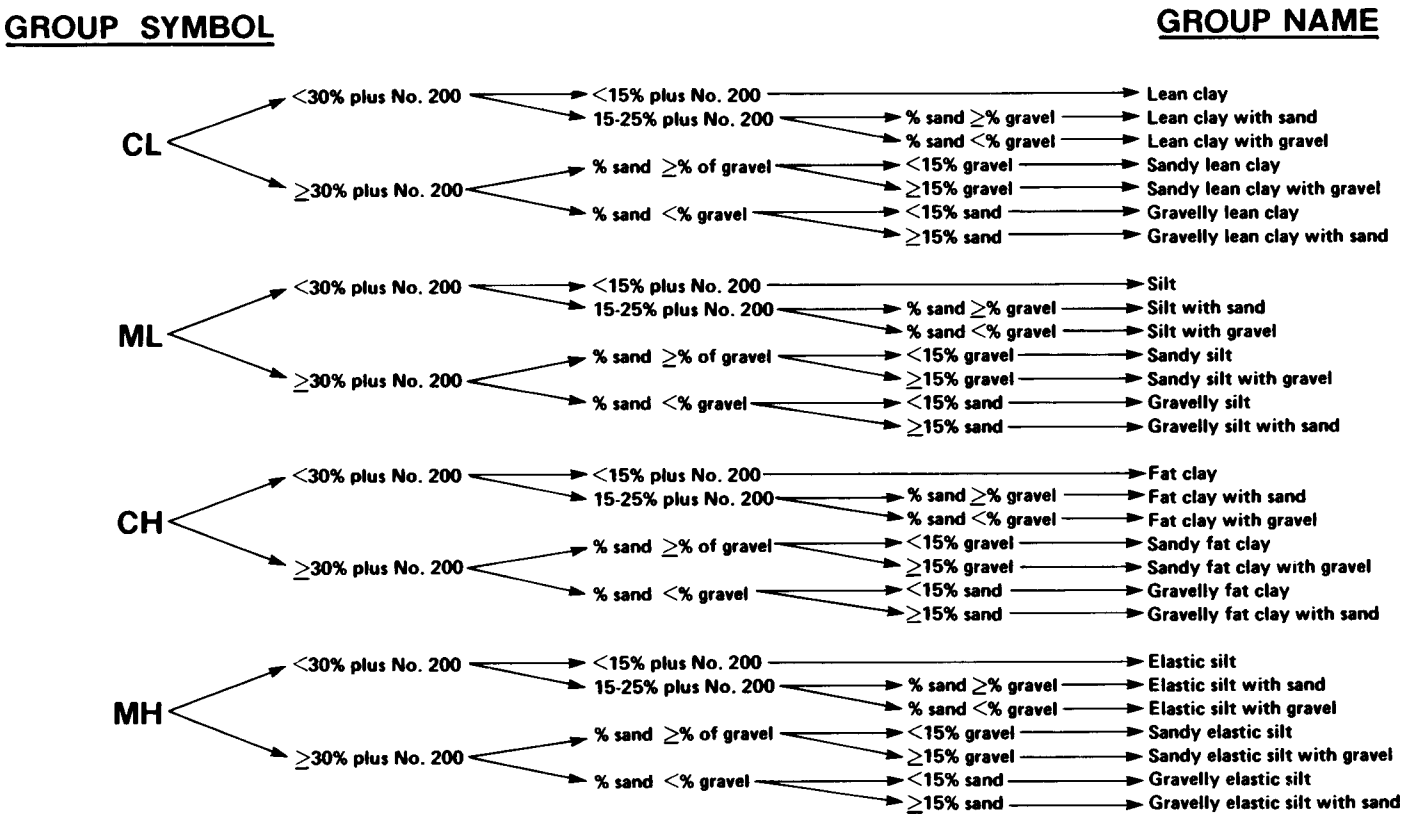

NOTE 1—Percentages are based on estimating amounts of fines, sand, and gravel to the nearest 5 %.

FIG. 1a Flow Chart for Identifying Inorganic Fine-Grained Soil (50 % or more fines)

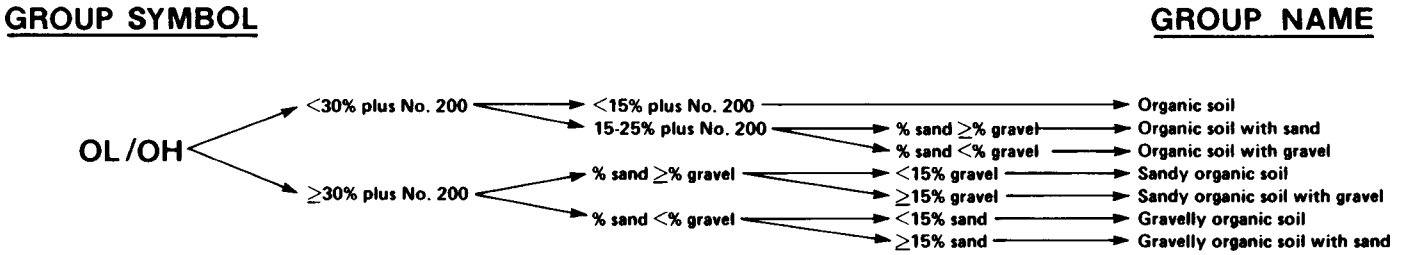

NOTE 1—Percentages are based on estimating amounts of fines, sand, and gravel to the nearest 5 %.

FIG. 1 b Flow Chart for Identifying Organic Fine-Grained Soil (50 % or more fines)

supply or natural source, including non-potable water.

7.2 *Hydrochloric Acid*—A small bottle of dilute hydrochloric acid, HCl, one part HCl (10 *N*) to three parts water (This reagent is optional for use with this practice). See Section 8.

8. Safety Precautions

8.1 When preparing the dilute HCl solution of one part concentrated hydrochloric acid (10 *N*) to three parts of distilled water, slowly add acid into water following necessary safety precautions. Handle with caution and store safely. If solution comes into contact with the skin, rinse thoroughly with water.

8.2 **Caution**—Do not add water to acid.

9. Sampling

9.1 The sample shall be considered to be representative of the stratum from which it was obtained by an appropriate, accepted, or standard procedure.

NOTE 6—Preferably, the sampling procedure should be identified as having been conducted in accordance with Practices D 1452, D 1587, or D 2113, or Test Method D 1586.

9.2 The sample shall be carefully identified as to origin.

NOTE 7—Remarks as to the origin may take the form of a boring number and sample number in conjunction with a job number, a geologic stratum, a pedologic horizon or a location description with respect to a permanent monument, a grid system or a station number and offset with respect to a stated centerline and a depth or elevation.

9.3 For accurate description and identification, the minimum amount of the specimen to be examined shall be in accordance with the following schedule:

Maximum Particle Size, Sieve Opening	Minimum Specimen Size, Dry Weight
4.75 mm (No. 4)	100 g (0.25 lb)
9.5 mm (⅜ in.)	200 g (0.5 lb)
19.0 mm (¾ in.)	1.0 kg (2.2 lb)
38.1 mm (1½ in.)	8.0 kg (18 lb)
75.0 mm (3 in.)	60.0 kg (132 lb)

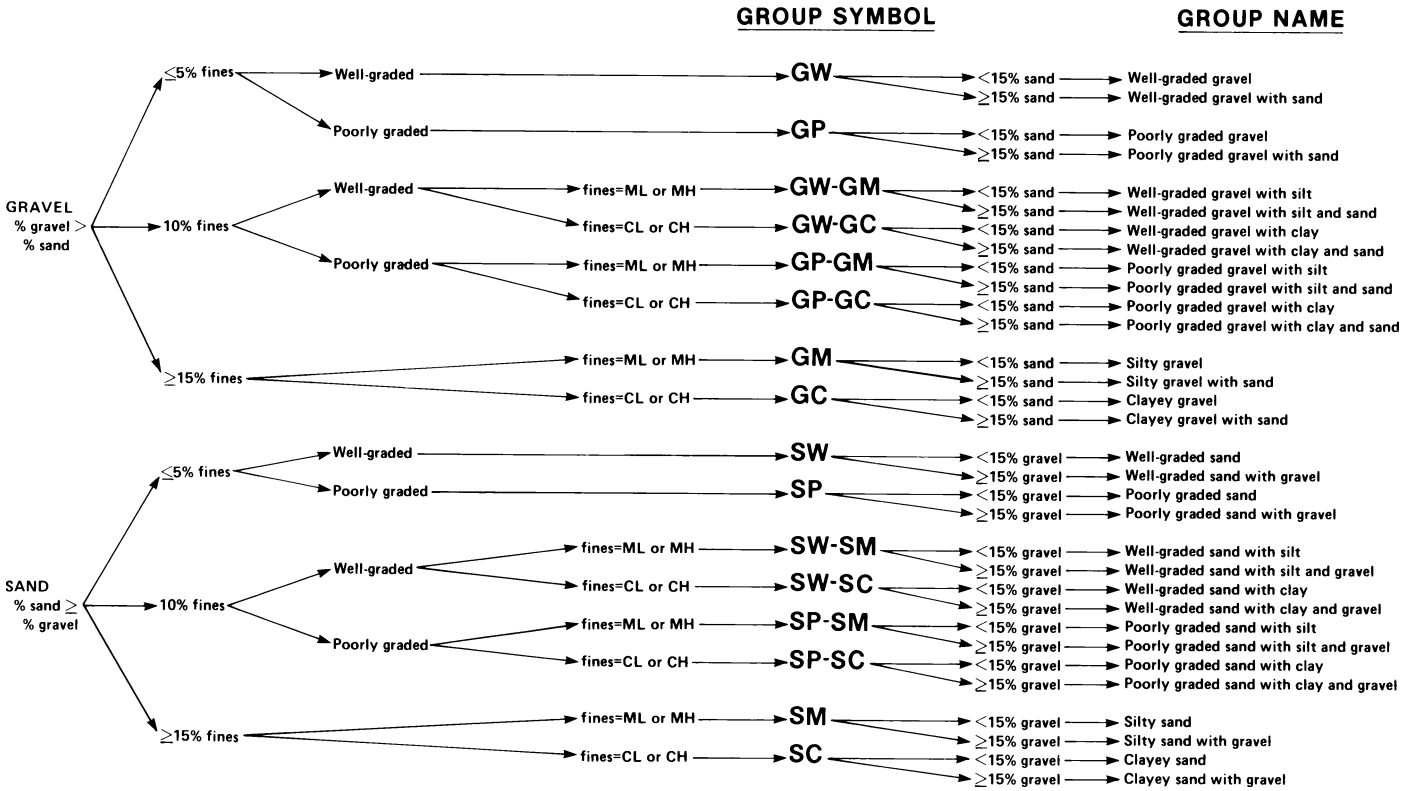

NOTE 1—Percentages are based on estimating amounts of fines, sand, and gravel to the nearest 5 %.

FIG. 2 Flow Chart for Identifying Coarse-Grained Soils (less than 50 % fines)

NOTE 8—If random isolated particles are encountered that are significantly larger than the particles in the soil matrix, the soil matrix can be accurately described and identified in accordance with the preceeding schedule.

9.4 If the field sample or specimen being examined is smaller than the minimum recommended amount, the report shall include an appropriate remark.

10. Descriptive Information for Soils

10.1 *Angularity*—Describe the angularity of the sand (coarse sizes only), gravel, cobbles, and boulders, as angular, subangular, subrounded, or rounded in accordance with the criteria in Table 1 and Fig. 3. A range of angularity may be stated, such as: subrounded to rounded.

10.2 *Shape*—Describe the shape of the gravel, cobbles, and boulders as flat, elongated, or flat and elongated if they meet the criteria in Table 2 and Fig. 4. Otherwise, do not mention the shape. Indicate the fraction of the particles that have the shape, such as: one-third of the gravel particles are flat.

TABLE 1 Criteria for Describing Angularity of Coarse-Grained Particles (see Fig. 3)

Description	Criteria
Angular	Particles have sharp edges and relatively plane sides with unpolished surfaces
Subangular	Particles are similar to angular description but have rounded edges
Subrounded	Particles have nearly plane sides but have well-rounded corners and edges
Rounded	Particles have smoothly curved sides and no edges

10.3 *Color*—Describe the color. Color is an important property in identifying organic soils, and within a given locality it may also be useful in identifying materials of similar geologic origin. If the sample contains layers or patches of varying colors, this shall be noted and all representative colors shall be described. The color shall be described for moist samples. If the color represents a dry condition, this shall be stated in the report.

10.4 *Odor*—Describe the odor if organic or unusual. Soils containing a significant amount of organic material usually have a distinctive odor of decaying vegetation. This is especially apparent in fresh samples, but if the samples are dried, the odor may often be revived by heating a moistened sample. If the odor is unusual (petroleum product, chemical, and the like), it shall be described.

10.5 *Moisture Condition*—Describe the moisture condition as dry, moist, or wet, in accordance with the criteria in Table 3.

10.6 *HCl Reaction*—Describe the reaction with HCl as none, weak, or strong, in accordance with the critera in Table 4. Since calcium carbonate is a common cementing agent, a report of its presence on the basis of the reaction with dilute hydrochloric acid is important.

10.7 *Consistency*—For intact fine-grained soil, describe the consistency as very soft, soft, firm, hard, or very hard, in accordance with the criteria in Table 5. This observation is inappropriate for soils with significant amounts of gravel.

10.8 *Cementation*—Describe the cementation of intact coarse-grained soils as weak, moderate, or strong, in accordance with the criteria in Table 6.

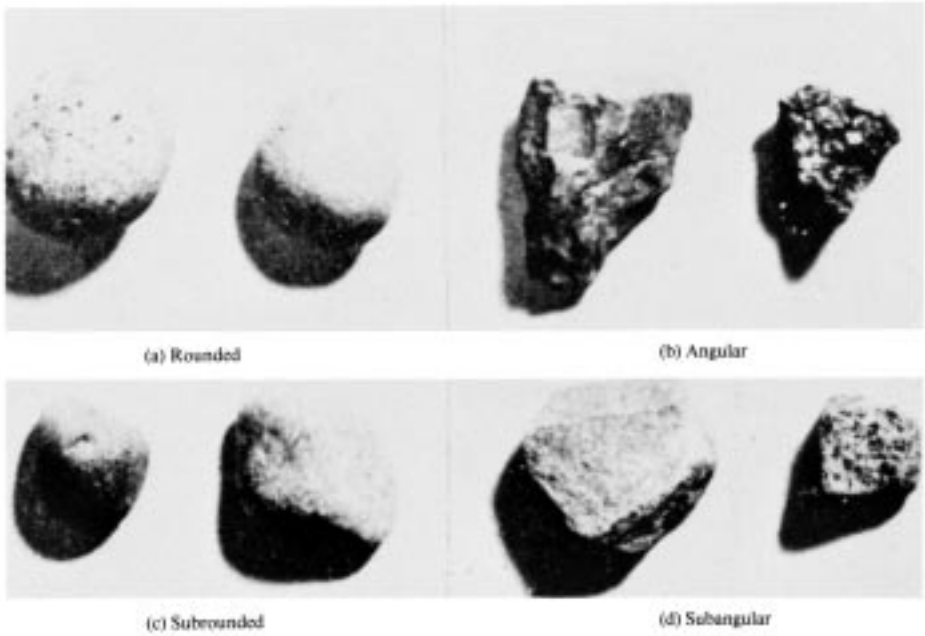

FIG. 3 Typical Angularity of Bulky Grains

TABLE 2 Criteria for Describing Particle Shape (see Fig. 4)

The particle shape shall be described as follows where length, width, and thickness refer to the greatest, intermediate, and least dimensions of a particle, respectively.	
Flat	Particles with width/thickness > 3
Elongated	Particles with length/width > 3
Flat and elongated	Particles meet criteria for both flat and elongated

10.9 *Structure*—Describe the structure of intact soils in accordance with the criteria in Table 7.

10.10 *Range of Particle Sizes*—For gravel and sand components, describe the range of particle sizes within each component as defined in 3.1.2 and 3.1.6. For example, about 20 % fine to coarse gravel, about 40 % fine to coarse sand.

10.11 *Maximum Particle Size*—Describe the maximum particle size found in the sample in accordance with the following information:

10.11.1 *Sand Size*—If the maximum particle size is a sand size, describe as fine, medium, or coarse as defined in 3.1.6. For example: maximum particle size, medium sand.

10.11.2 *Gravel Size*—If the maximum particle size is a gravel size, describe the maximum particle size as the smallest sieve opening that the particle will pass. For example, maximum particle size, 1½ in. (will pass a 1½-in. square opening but not a ¾-in. square opening).

10.11.3 *Cobble or Boulder Size*—If the maximum particle size is a cobble or boulder size, describe the maximum dimension of the largest particle. For example: maximum dimension, 18 in. (450 mm).

10.12 *Hardness*—Describe the hardness of coarse sand and larger particles as hard, or state what happens when the particles are hit by a hammer, for example, gravel-size particles fracture with considerable hammer blow, some gravel-size particles crumble with hammer blow. "Hard" means particles do not crack, fracture, or crumble under a hammer blow.

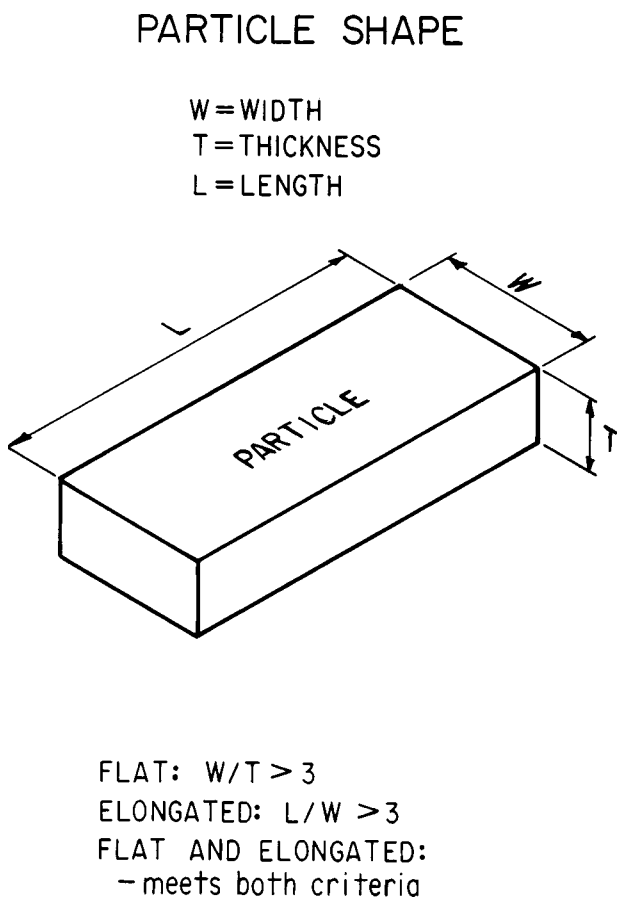

FIG. 4 Criteria for Particle Shape

10.13 Additional comments shall be noted, such as the presence of roots or root holes, difficulty in drilling or augering

TABLE 3 Criteria for Describing Moisture Condition

Description	Criteria
Dry	Absence of moisture, dusty, dry to the touch
Moist	Damp but no visible water
Wet	Visible free water, usually soil is below water table

TABLE 4 Criteria for Describing the Reaction With HCl

Description	Criteria
None	No visible reaction
Weak	Some reaction, with bubbles forming slowly
Strong	Violent reaction, with bubbles forming immediately

TABLE 5 Criteria for Describing Dilatancy

Description	Criteria
Very soft	Thumb will penetrate soil more than 1 in. (25 mm)
Soft	Thumb will penetrate soil about 1 in. (25 mm)
Firm	Thumb will indent soil about ¼in. (6 mm)
Hard	Thumb will not indent soil but readily indented with thumbnail
Very hard	Thumbnail will not indent soil

TABLE 6 Criteria for Describing Toughness

Description	Criteria
Weak	Crumbles or breaks with handling or little finger pressure
Moderate	Crumbles or breaks with considerable finger pressure
Strong	Will not crumble or break with finger pressure

TABLE 7 Criteria for Describing Dilatancy

Description	Criteria
Stratified	Alternating layers of varying material or color with layers at least 6 mm thick; note thickness
Laminated	Alternating layers of varying material or color with the layers less than 6 mm thick; note thickness
Fissured	Breaks along definite planes of fracture with little resistance to fracturing
Slickensided	Fracture planes appear polished or glossy, sometimes striated
Blocky	Cohesive soil that can be broken down into small angular lumps which resist further breakdown
Lensed	Inclusion of small pockets of different soils, such as small lenses of sand scattered through a mass of clay; note thickness
Homogeneous	Same color and appearance throughout

hole, caving of trench or hole, or the presence of mica.

10.14 A local or commercial name or a geologic interpretation of the soil, or both, may be added if identified as such.

10.15 A classification or identification of the soil in accordance with other classification systems may be added if identified as such.

11. Identification of Peat

11.1 A sample composed primarily of vegetable tissue in various stages of decomposition that has a fibrous to amorphous texture, usually a dark brown to black color, and an organic odor, shall be designated as a highly organic soil and shall be identified as peat, PT, and not subjected to the identification procedures described hereafter.

12. Preparation for Identification

12.1 The soil identification portion of this practice is based on the portion of the soil sample that will pass a 3-in. (75-mm) sieve. The larger than 3-in. (75-mm) particles must be removed, manually, for a loose sample, or mentally, for an intact sample before classifying the soil.

12.2 Estimate and note the percentage of cobbles and the percentage of boulders. Performed visually, these estimates will be on the basis of volume percentage.

NOTE 9—Since the percentages of the particle-size distribution in Test Method D 2487 are by dry weight, and the estimates of percentages for gravel, sand, and fines in this practice are by dry weight, it is recommended that the report state that the percentages of cobbles and boulders are by volume.

12.3 Of the fraction of the soil smaller than 3 in. (75 mm), estimate and note the percentage, by dry weight, of the gravel, sand, and fines (see Appendix X4 for suggested procedures).

NOTE 10—Since the particle-size components appear visually on the basis of volume, considerable experience is required to estimate the percentages on the basis of dry weight. Frequent comparisons with laboratory particle-size analyses should be made.

12.3.1 The percentages shall be estimated to the closest 5 %. The percentages of gravel, sand, and fines must add up to 100 %.

12.3.2 If one of the components is present but not in sufficient quantity to be considered 5 % of the smaller than 3-in. (75-mm) portion, indicate its presence by the term *trace*, for example, trace of fines. A trace is not to be considered in the total of 100 % for the components.

13. Preliminary Identification

13.1 The soil is *fine grained* if it contains 50 % or more fines. Follow the procedures for identifying fine-grained soils of Section 14.

13.2 The soil is *coarse grained* if it contains less than 50 % fines. Follow the procedures for identifying coarse-grained soils of Section 15.

14. Procedure for Identifying Fine-Grained Soils

14.1 Select a representative sample of the material for examination. Remove particles larger than the No. 40 sieve (medium sand and larger) until a specimen equivalent to about a handful of material is available. Use this specimen for performing the dry strength, dilatancy, and toughness tests.

14.2 *Dry Strength*:

14.2.1 From the specimen, select enough material to mold into a ball about 1 in. (25 mm) in diameter. Mold the material until it has the consistency of putty, adding water if necessary.

14.2.2 From the molded material, make at least three test specimens. A test specimen shall be a ball of material about ½ in. (12 mm) in diameter. Allow the test specimens to dry in air, or sun, or by artificial means, as long as the temperature does not exceed 60°C.

14.2.3 If the test specimen contains natural dry lumps, those that are about ½ in. (12 mm) in diameter may be used in place of the molded balls.

NOTE 11—The process of molding and drying usually produces higher strengths than are found in natural dry lumps of soil.

14.2.4 Test the strength of the dry balls or lumps by crushing between the fingers. Note the strength as none, low,

medium, high, or very high in accorance with the criteria in Table 8. If natural dry lumps are used, do not use the results of any of the lumps that are found to contain particles of coarse sand.

14.2.5 The presence of high-strength water-soluble cementing materials, such as calcium carbonate, may cause exceptionally high dry strengths. The presence of calcium carbonate can usually be detected from the intensity of the reaction with dilute hydrochloric acid (see 10.6).

14.3 *Dilatancy*:

14.3.1 From the specimen, select enough material to mold into a ball about ½ in. (12 mm) in diameter. Mold the material, adding water if necessary, until it has a soft, but not sticky, consistency.

14.3.2 Smooth the soil ball in the palm of one hand with the blade of a knife or small spatula. Shake horizontally, striking the side of the hand vigorously against the other hand several times. Note the reaction of water appearing on the surface of the soil. Squeeze the sample by closing the hand or pinching the soil between the fingers, and note the reaction as none, slow, or rapid in accordance with the criteria in Table 9. The reaction is the speed with which water appears while shaking, and disappears while squeezing.

14.4 *Toughness*:

14.4.1 Following the completion of the dilatancy test, the test specimen is shaped into an elongated pat and rolled by hand on a smooth surface or between the palms into a thread about ⅛ in. (3 mm) in diameter. (If the sample is too wet to roll easily, it should be spread into a thin layer and allowed to lose some water by evaporation.) Fold the sample threads and reroll repeatedly until the thread crumbles at a diameter of about ⅛ in. The thread will crumble at a diameter of ⅛ in. when the soil is near the plastic limit. Note the pressure required to roll the thread near the plastic limit. Also, note the strength of the thread. After the thread crumbles, the pieces should be lumped together and kneaded until the lump crumbles. Note the toughness of the material during kneading.

14.4.2 Describe the toughness of the thread and lump as low, medium, or high in accordance with the criteria in Table 10.

14.5 *Plasticity*—On the basis of observations made during the toughness test, describe the plasticity of the material in accordance with the criteria given in Table 11.

14.6 Decide whether the soil is an *inorganic* or an *organic* fine-grained soil (see 14.8). If inorganic, follow the steps given in 14.7.

TABLE 8 Criteria for Describing Toughness

Description	Criteria
None	The dry specimen crumbles into powder with mere pressure of handling
Low	The dry specimen crumbles into powder with some finger pressure
Medium	The dry specimen breaks into pieces or crumbles with considerable finger pressure
High	The dry specimen cannot be broken with finger pressure. Specimen will break into pieces between thumb and a hard surface
Very high	The dry specimen cannot be broken between the thumb and a hard surface

TABLE 9 Criteria for Describing Dilatancy

Description	Criteria
None	No visible change in the specimen
Slow	Water appears slowly on the surface of the specimen during shaking and does not disappear or disappears slowly upon squeezing
Rapid	Water appears quickly on the surface of the specimen during shaking and disappears quickly upon squeezing

TABLE 10 Criteria for Describing Toughness

Description	Criteria
Low	Only slight pressure is required to roll the thread near the plastic limit. The thread and the lump are weak and soft
Medium	Medium pressure is required to roll the thread to near the plastic limit. The thread and the lump have medium stiffness
High	Considerable pressure is required to roll the thread to near the plastic limit. The thread and the lump have very high stiffness

TABLE 11 Criteria for Describing Plasticity

Description	Criteria
Nonplastic	A ⅛-in. (3-mm) thread cannot be rolled at any water content
Low	The thread can barely be rolled and the lump cannot be formed when drier than the plastic limit
Medium	The thread is easy to roll and not much time is required to reach the plastic limit. The thread cannot be rerolled after reaching the plastic limit. The lump crumbles when drier than the plastic limit
High	It takes considerable time rolling and kneading to reach the plastic limit. The thread can be rerolled several times after reaching the plastic limit. The lump can be formed without crumbling when drier than the plastic limit

14.7 *Identification of Inorganic Fine-Grained Soils*:

14.7.1 Identify the soil as a *lean clay*, CL, if the soil has medium to high dry strength, no or slow dilatancy, and medium toughness and plasticity (see Table 12).

14.7.2 Identify the soil as a *fat clay*, CH, if the soil has high to very high dry strength, no dilatancy, and high toughness and plasticity (see Table 12).

14.7.3 Identify the soil as a *silt*, ML, if the soil has no to low dry strength, slow to rapid dilatancy, and low toughness and plasticity, or is nonplastic (see Table 12).

14.7.4 Identify the soil as an *elastic silt*, MH, if the soil has low to medium dry strength, no to slow dilatancy, and low to medium toughness and plasticity (see Table 12).

NOTE 12—These properties are similar to those for a lean clay. However, the silt will dry quickly on the hand and have a smooth, silky feel when dry. Some soils that would classify as MH in accordance with the criteria in Test Method D 2487 are visually difficult to distinguish from lean clays, CL. It may be necessary to perform laboratory testing for proper identification.

TABLE 12 Identification of Inorganic Fine-Grained Soils from Manual Tests

Soil Symbol	Dry Strength	Dilatancy	Toughness
ML	None to low	Slow to rapid	Low or thread cannot be formed
CL	Medium to high	None to slow	Medium
MH	Low to medium	None to slow	Low to medium
CH	High to very high	None	High

14.8 *Identification of Organic Fine-Grained Soils*:

14.8.1 Identify the soil as an *organic soil*, OL/OH, if the soil contains enough organic particles to influence the soil properties. Organic soils usually have a dark brown to black color and may have an organic odor. Often, organic soils will change color, for example, black to brown, when exposed to the air. Some organic soils will lighten in color significantly when air dried. Organic soils normally will not have a high toughness or plasticity. The thread for the toughness test will be spongy.

NOTE 13—In some cases, through practice and experience, it may be possible to further identify the organic soils as organic silts or organic clays, OL or OH. Correlations between the dilatancy, dry strength, toughness tests, and laboratory tests can be made to identify organic soils in certain deposits of similar materials of known geologic origin.

14.9 If the soil is estimated to have 15 to 25 % sand or gravel, or both, the words "with sand" or "with gravel" (whichever is more predominant) shall be added to the group name. For example: "lean clay with sand, CL" or "silt with gravel, ML" (see Fig. 1a and Fig. 1b). If the percentage of sand is equal to the percentage of gravel, use "with sand."

14.10 If the soil is estimated to have 30 % or more sand or gravel, or both, the words "sandy" or "gravelly" shall be added to the group name. Add the word "sandy" if there appears to be more sand than gravel. Add the word "gravelly" if there appears to be more gravel than sand. For example: "sandy lean clay, CL", "gravelly fat clay, CH", or "sandy silt, ML" (see Fig. 1a and Fig. 1b). If the percentage of sand is equal to the percent of gravel, use "sandy."

15. Procedure for Identifying Coarse-Grained Soils

(Contains less than 50 % fines)

15.1 The soil is a *gravel* if the percentage of gravel is estimated to be more than the percentage of sand.

15.2 The soil is a *sand* if the percentage of gravel is estimated to be equal to or less than the percentage of sand.

15.3 The soil is a *clean gravel* or *clean sand* if the percentage of fines is estimated to be 5 % or less.

15.3.1 Identify the soil as a *well-graded gravel*, GW, or as a *well-graded sand*, SW, if it has a wide range of particle sizes and substantial amounts of the intermediate particle sizes.

15.3.2 Identify the soil as a *poorly graded gravel*, GP, or as a *poorly graded sand*, SP, if it consists predominantly of one size (uniformly graded), or it has a wide range of sizes with some intermediate sizes obviously missing (gap or skip graded).

15.4 The soil is either a *gravel with fines* or a *sand with fines* if the percentage of fines is estimated to be 15 % or more.

15.4.1 Identify the soil as a *clayey gravel*, GC, or a *clayey sand*, SC, if the fines are clayey as determined by the procedures in Section 14.

15.4.2 Identify the soil as a *silty gravel*, GM, or a *silty sand*, SM, if the fines are silty as determined by the procedures in Section 14.

15.5 If the soil is estimated to contain 10 % fines, give the soil a dual identification using two group symbols.

15.5.1 The first group symbol shall correspond to a clean gravel or sand (GW, GP, SW, SP) and the second symbol shall correspond to a gravel or sand with fines (GC, GM, SC, SM).

15.5.2 The group name shall correspond to the first group symbol plus the words "with clay" or "with silt" to indicate the plasticity characteristics of the fines. For example: "well-graded gravel with clay, GW-GC" or "poorly graded sand with silt, SP-SM" (see Fig. 2).

15.6 If the specimen is predominantly sand or gravel but contains an estimated 15 % or more of the other coarse-grained constituent, the words "with gravel" or "with sand" shall be added to the group name. For example: "poorly graded gravel with sand, GP" or "clayey sand with gravel, SC" (see Fig. 2).

15.7 If the field sample contains any cobbles or boulders, or both, the words "with cobbles" or "with cobbles and boulders" shall be added to the group name. For example: "silty gravel with cobbles, GM."

16. Report

16.1 The report shall include the information as to origin, and the items indicated in Table 13.

NOTE 14—*Example: Clayey Gravel with Sand and Cobbles, GC*—About 50 % fine to coarse, subrounded to subangular gravel; about 30 % fine to coarse, subrounded sand; about 20 % fines with medium plasticity, high dry strength, no dilatancy, medium toughness; weak reaction with HCl; original field sample had about 5 % (by volume) subrounded cobbles, maximum dimension, 150 mm.

In-Place Conditions—Firm, homogeneous, dry, brown

Geologic Interpretation—Alluvial fan

NOTE 15—Other examples of soil descriptions and identification are given in Appendix X1 and Appendix X2.

NOTE 16—If desired, the percentages of gravel, sand, and fines may be stated in terms indicating a range of percentages, as follows:

Trace—Particles are present but estimated to be less than 5 %
Few—5 to 10 %
Little—15 to 25 %
Some—30 to 45 %
Mostly—50 to 100 %

TABLE 13 Checklist for Description of Soils

1. Group name
2. Group symbol
3. Percent of cobbles or boulders, or both (by volume)
4. Percent of gravel, sand, or fines, or all three (by dry weight)
5. Particle-size range:
   Gravel—fine, coarse
   Sand—fine, medium, coarse
6. Particle angularity: angular, subangular, subrounded, rounded
7. Particle shape: (if appropriate) flat, elongated, flat and elongated
8. Maximum particle size or dimension
9. Hardness of coarse sand and larger particles
10. Plasticity of fines: nonplastic, low, medium, high
11. Dry strength: none, low, medium, high, very high
12. Dilatancy: none, slow, rapid
13. Toughness: low, medium, high
14. Color (in moist condition)
15. Odor (mention only if organic or unusual)
16. Moisture: dry, moist, wet
17. Reaction with HCl: none, weak, strong

For intact samples:

18. Consistency (fine-grained soils only): very soft, soft, firm, hard, very hard
19. Structure: stratified, laminated, fissured, slickensided, lensed, homogeneous
20. Cementation: weak, moderate, strong
21. Local name
22. Geologic interpretation
23. Additional comments: presence of roots or root holes, presence of mica, gypsum, etc., surface coatings on coarse-grained particles, caving or sloughing of auger hole or trench sides, difficulty in augering or excavating, etc.

16.2 If, in the soil description, the soil is identified using a classification group symbol and name as described in Test Method D 2487, it must be distinctly and clearly stated in log forms, summary tables, reports, and the like, that the symbol and name are based on visual-manual procedures.

17. Precision and Bias

17.1 This practice provides qualitative information only, therefore, a precision and bias statement is not applicable.

18. Keywords

18.1 classification; clay; gravel; organic soils; sand; silt; soil classification; soil description; visual classification

APPENDIXES

(Nonmandatory Information)

X1. EXAMPLES OF VISUAL SOIL DESCRIPTIONS

X1.1 The following examples show how the information required in 16.1 can be reported. The information that is included in descriptions should be based on individual circumstances and need.

X1.1.1 *Well-Graded Gravel with Sand (GW)*—About 75 % fine to coarse, hard, subangular gravel; about 25 % fine to coarse, hard, subangular sand; trace of fines; maximum size, 75 mm, brown, dry; no reaction with HCl.

X1.1.2 *Silty Sand with Gravel (SM)*—About 60 % predominantly fine sand; about 25 % silty fines with low plasticity, low dry strength, rapid dilatancy, and low toughness; about 15 % fine, hard, subrounded gravel, a few gravel-size particles fractured with hammer blow; maximum size, 25 mm; no reaction with HCl (Note—Field sample size smaller than recommended).

In-Place Conditions—Firm, stratified and contains lenses of silt 1 to 2 in. (25 to 50 mm) thick, moist, brown to gray; in-place density 106 lb/ft^3; in-place moisture 9 %.

X1.1.3 *Organic Soil (OL/OH)*—About 100 % fines with low plasticity, slow dilatancy, low dry strength, and low toughness; wet, dark brown, organic odor; weak reaction with HCl.

X1.1.4 *Silty Sand with Organic Fines (SM)*—About 75 % fine to coarse, hard, subangular reddish sand; about 25 % organic and silty dark brown nonplastic fines with no dry strength and slow dilatancy; wet; maximum size, coarse sand; weak reaction with HCl.

X1.1.5 *Poorly Graded Gravel with Silt, Sand, Cobbles and Boulders (GP-GM)*—About 75 % fine to coarse, hard, subrounded to subangular gravel; about 15 % fine, hard, subrounded to subangular sand; about 10 % silty nonplastic fines; moist, brown; no reaction with HCl; original field sample had about 5 % (by volume) hard, subrounded cobbles and a trace of hard, subrounded boulders, with a maximum dimension of 18 in. (450 mm).

X2. USING THE IDENTIFICATION PROCEDURE AS A DESCRIPTIVE SYSTEM FOR SHALE, CLAYSTONE, SHELLS, SLAG, CRUSHED ROCK, AND THE LIKE

X2.1 The identification procedure may be used as a descriptive system applied to materials that exist in-situ as shale, claystone, sandstone, siltstone, mudstone, etc., but convert to soils after field or laboratory processing (crushing, slaking, and the like).

X2.2 Materials such as shells, crushed rock, slag, and the like, should be identified as such. However, the procedures used in this practice for describing the particle size and plasticity characteristics may be used in the description of the material. If desired, an identification using a group name and symbol according to this practice may be assigned to aid in describing the material.

X2.3 The group symbol(s) and group names should be placed in quotation marks or noted with some type of distinguishing symbol. See examples.

X2.4 Examples of how group names and symbols can be incororated into a descriptive system for materials that are not naturally occurring soils are as follows:

X2.4.1 *Shale Chunks*—Retrieved as 2 to 4-in. (50 to 100-mm) pieces of shale from power auger hole, dry, brown, no reaction with HCl. After slaking in water for 24 h, material identified as “Sandy Lean Clay (CL)”; about 60 % fines with medium plasticity, high dry strength, no dilatancy, and medium toughness; about 35 % fine to medium, hard sand; about 5 % gravel-size pieces of shale.

X2.4.2 *Crushed Sandstone*—Product of commercial crushing operation; “Poorly Graded Sand with Silt (SP-SM)”; about 90 % fine to medium sand; about 10 % nonplastic fines; dry, reddish-brown, strong reaction with HCl.

X2.4.3 *Broken Shells*—About 60 % gravel-size broken shells; about 30 % sand and sand-size shell pieces; about 10 % fines; “Poorly Graded Gravel with Sand (GP).”

X2.4.4 *Crushed Rock*—Processed from gravel and cobbles in Pit No. 7; “Poorly Graded Gravel (GP)”; about 90 % fine, hard, angular gravel-size particles; about 10 % coarse, hard,

angular sand-size particles; dry, tan; no reaction with HCl.

X3. SUGGESTED PROCEDURE FOR USING A BORDERLINE SYMBOL FOR SOILS WITH TWO POSSIBLE IDENTIFICATIONS.

X3.1 Since this practice is based on estimates of particle size distribution and plasticity characteristics, it may be difficult to clearly identify the soil as belonging to one category. To indicate that the soil may fall into one of two possible basic groups, a borderline symbol may be used with the two symbols separated by a slash. For example: SC/CL or CL/CH.

X3.1.1 A borderline symbol may be used when the percentage of fines is estimated to be between 45 and 55 %. One symbol should be for a coarse-grained soil with fines and the other for a fine-grained soil. For example: GM/ML or CL/SC.

X3.1.2 A borderline symbol may be used when the percentage of sand and the percentage of gravel are estimated to be about the same. For example: GP/SP, SC/GC, GM/SM. It is practically impossible to have a soil that would have a borderline symbol of GW/SW.

X3.1.3 A borderline symbol may be used when the soil could be either well graded or poorly graded. For example: GW/GP, SW/SP.

X3.1.4 A borderline symbol may be used when the soil could either be a silt or a clay. For example: CL/ML, CH/MH, SC/SM.

X3.1.5 A borderline symbol may be used when a fine-grained soil has properties that indicate that it is at the boundary between a soil of low compressibility and a soil of high compressibility. For example: CL/CH, MH/ML.

X3.2 The order of the borderline symbols should reflect similarity to surrounding or adjacent soils. For example: soils in a borrow area have been identified as CH. One sample is considered to have a borderline symbol of CL and CH. To show similarity, the borderline symbol should be CH/CL.

X3.3 The group name for a soil with a borderline symbol should be the group name for the first symbol, except for:

CL/CH lean to fat clay
ML/CL clayey silt
CL/ML silty clay

X3.4 The use of a borderline symbol should not be used indiscriminately. Every effort shall be made to first place the soil into a single group.

X4. SUGGESTED PROCEDURES FOR ESTIMATING THE PERCENTAGES OF GRAVEL, SAND, AND FINES IN A SOIL SAMPLE

X4.1 *Jar Method*—The relative percentage of coarse- and fine-grained material may be estimated by thoroughly shaking a mixture of soil and water in a test tube or jar, and then allowing the mixture to settle. The coarse particles will fall to the bottom and successively finer particles will be deposited with increasing time; the sand sizes will fall out of suspension in 20 to 30 s. The relative proportions can be estimated from the relative volume of each size separate. This method should be correlated to particle-size laboratory determinations.

X4.2 *Visual Method*—Mentally visualize the gravel size particles placed in a sack (or other container) or sacks. Then, do the same with the sand size particles and the fines. Then, mentally compare the number of sacks to estimate the percentage of plus No. 4 sieve size and minus No. 4 sieve size present. The percentages of sand and fines in the minus sieve size No. 4 material can then be estimated from the wash test (X4.3).

X4.3 *Wash Test (for relative percentages of sand and fines)*—Select and moisten enough minus No. 4 sieve size material to form a 1-in (25-mm) cube of soil. Cut the cube in half, set one-half to the side, and place the other half in a small dish. Wash and decant the fines out of the material in the dish until the wash water is clear and then compare the two samples and estimate the percentage of sand and fines. Remember that the percentage is based on weight, not volume. However, the volume comparison will provide a reasonable indication of grain size percentages.

X4.3.1 While washing, it may be necessary to break down lumps of fines with the finger to get the correct percentages.

X5. ABBREVIATED SOIL CLASSIFICATION SYMBOLS

X5.1 In some cases, because of lack of space, an abbreviated system may be useful to indicate the soil classification symbol and name. Examples of such cases would be graphical logs, databases, tables, etc.

X5.2 This abbreviated system is not a substitute for the full name and descriptive information but can be used in supplementary presentations when the complete description is referenced.

X5.3 The abbreviated system should consist of the soil classification symbol based on this standard with appropriate lower case letter prefixes and suffixes as:

Prefix:	Suffix:

s = sandy	s = with sand
g = gravelly	g = with gravel
	c = with cobbles
	b = with boulders

X5.4 The soil classification symbol is to be enclosed in parenthesis. Some examples would be:

Group Symbol and Full Name	Abbreviated
CL, Sandy lean clay	s(CL)
SP-SM, Poorly graded sand with silt and gravel	(SP-SM)g
GP, poorly graded gravel with sand, cobbles, and boulders	(GP)scb
ML, gravelly silt with sand and cobbles	g(ML)sc

SUMMARY OF CHANGES

In accordance with Committee D18 policy, this section identifies the location of changes to this standard since the last edition (1993$^{\epsilon 1}$) that may impact the use of this standard.

(1) Added Practice D 3740 to Section 2.

(2) Added Note 5 under 5.7 and renumbered subsequent notes.

The American Society for Testing and Materials takes no position respecting the validity of any patent rights asserted in connection with any item mentioned in this standard. Users of this standard are expressly advised that determination of the validity of any such patent rights, and the risk of infringement of such rights, are entirely their own responsibility.

This standard is subject to revision at any time by the responsible technical committee and must be reviewed every five years and if not revised, either reapproved or withdrawn. Your comments are invited either for revision of this standard or for additional standards and should be addressed to ASTM Headquarters. Your comments will receive careful consideration at a meeting of the responsible technical committee, which you may attend. If you feel that your comments have not received a fair hearing you should make your views known to the ASTM Committee on Standards, at the address shown below.

This standard is copyrighted by ASTM, 100 Barr Harbor Drive, PO Box C700, West Conshohocken, PA 19428-2959, United States. Individual reprints (single or multiple copies) of this standard may be obtained by contacting ASTM at the above address or at 610-832-9585 (phone), 610-832-9555 (fax), or service@astm.org (e-mail); or through the ASTM website (www.astm.org).

ATTACHMENT C SOIL CLASSIFICATION FIELD GUIDES

UNIFIED SOIL CLASSIFICATION SYSTEM - ASTM D2488

MAJOR DIVISION			GROUP SYMBOL	LETTER SYMBOL	GROUP NAME
COARSE GRAINED SOILS CONTAINS MORE THAN 50% FINES	**GRAVEL AND GRAVELLY SOILS** MORE THAN 50% OF COARSE FRACTION RETAINED ON NO. 4 SIEVE	GRAVEL WITH * 5% FINES		GW	Well-graded GRAVEL
				GP	Poorly graded GRAVEL
		GRAVEL WITH BETWEEN 5% AND 15% FINES		GW-GM	Well-graded GRAVEL with silt
				GW-GC	Well-graded GRAVEL with clay
				GP-GM	Poorly graded GRAVEL with silt
				GP-GC	Poorly graded GRAVEL with clay
		GRAVEL WITH ≥ 15% FINES		GM	Silty GRAVEL
				GC	Clayey GRAVEL
	SAND AND SANDY SOILS MORE THAN 50% OF COARSE FRACTION PASSING ON NO. 4 SIEVE	SAND WITH * 5% FINES		SW	Well-graded SAND
				SP	Poorly graded SAND
		SAND WITH BETWEEN 5% AND 15% FINES		SW-SM	Well-graded SAND with silt
				SW-SC	Well-graded SAND with clay
				SP-SM	Poorly graded SAND with silt
				SP-SC	Poorly graded SAND with clay
		SAND WITH ≥ 15% FINES		SM	Silty SAND
				SC	Clayey SAND
FINE GRAINED SOILS CONTAINS MORE THAN 50% FINES	SILT AND CLAY	LIQUID LIMIT LESS THAN 50		ML	Inorganic SILT with low plasticity
				CL	Lean inorganic CLAY with low plasticity
				OL	Organic SILT with low plasticity
		LIQUID LIMIT GREATER THAN 50		MH	Elastic inorganic SILT with moderate to high plasticity
				CH	Fat inorganic CLAY with moderate to high plasticity
				OH	Organic SILT or CLAY with moderate to high plasticity
HIGHLY ORGANIC SOILS				PT	PEAT soils with high organic contents

NOTES:

1) Sample descriptions are based on visual field and laboratory observations using classification methods of ASTM D2488. Where laboratory data are available, classifications are in accordance with ASTM D2487.

2) Solid lines between soil descriptions indicate change in interpreted geologic unit. Dashed lines indicate stratigraphic change within the unit.

3) Fines are material passing the U.S. Std. #200 Sieve.

Classification of Granular Materials and Approximate Slot Size for Naturally Developed Wells

Name	Millimeters	Inches	Sieve Size	Slot Size (inches)	Slot Size (mm)
Boulders	>300	>11.8	>12”	>0.100	>2.5
Cobbles	300 - 75	11.8 - 2.9	12”- 3”	>0.100	>2.5
Gravel - coarse	75 -19	2.90 - 0.75	3” - 3/4”	>0.100	>2.5
Gravel - fine	19 - 4.8	0.75 - 0.19	3/4” - 4	>0.100	>2.5
Sand - coarse	4.8 - 2.0	0.19 - 0.08	4 - 10	0.100	2.5
Sand - coarse to medium	3.3 - 1.8	0.13 - 0.07	6 - 12	0.090	2.3
Sand - medium	2.2 - 1.3	0.09 - 0.05	8 - 16	0.070	1.8
Sand - medium	1.8 - 1.0	0.07 - 0.04	12 - 20	0.050	1.3
Sand - medium	1.3 - 0.5	0.05 - 0.02	16 - 30	0.030	0.8
Sand - fine	0.5 - 0.2	0.02 - 0.008	30 - 70	0.015	0.4
Sand - fine	0.2 - 0.08	0.008 - 0.003	30 - 200	0.007	0.2
Slits and Clays	<0.08	<0.003	<200	NA	NA

Grain size classification is based on USCS and slot selection is based on well construction using natural development and average grain sizes.

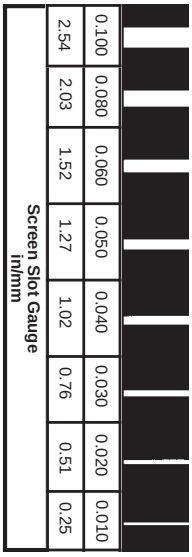

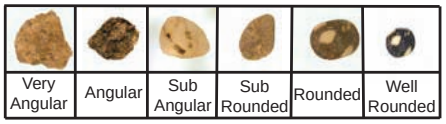

Sand / Slot Size Gauge

Gauge	Name	Natural Development Slot		Filter Pack	Filter Pack Slot	
		inches	mm	sieve	inches	mm
	Gravel	0.125	3.2	3/8” - 3/4”	0.250	6.4
	Sand - Coarse	0.100	2.5	4 - 3/8”	0.160	4.1
		0.080	2.0	3 - 6	0.120	3.0
	Sand - Medium	0.060	1.5	4 - 8	0.090	2.3
		0.040	1.0	6 - 12	0.070	1.8
	Sand - Fine	0.020	0.5	10 - 20	0.040	1.0
		0.007	0.2	20 - 40	0.018	0.5

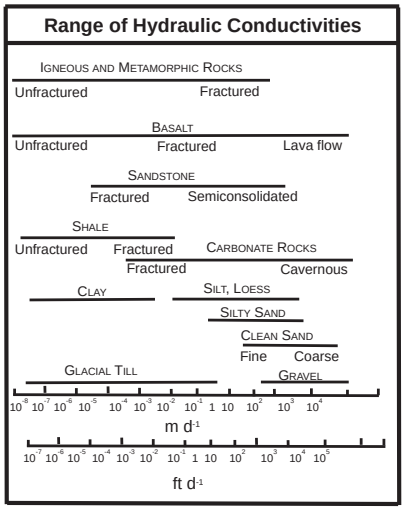

© 2007 Weatherford JS-BR7200-1207

Johnson screens®
A Weatherford Company
Thomas M. Hanna, RPG

WELL DESIGN AND CONSTRUCTION

PURPOSE

This SOP provides the methodology for installing and constructing permanent groundwater monitoring wells and piezometers for the collection of groundwater or groundwater-associated evaluations. Monitoring wells and piezometers should not alter the medium being monitored.

There is no ideal monitor well installation method for all conditions; therefore, hydrogeologic conditions must be considered before deciding which drilling method, installation method, and well material and is appropriate for the project. This SOP focuses on generally accepted practices for permanent well installation and should only be followed when there are no superseding guidelines. Federal, state, and local well installation guidelines should take precedent over this SOP and should govern the installation process. This SOP does not provide the methodology for installing multi-wells in a single borehole, multi-channel wells, or other specialized wells.

Relevant EHS Support SOPs

- SOP-04 Field Documentation
- SOP-07 Investigation Derived Waste
- SOP-08 Field Equipment Operation and Calibration
- SOP-09 Equipment Decontamination
- SOP-24 to SOP-28 Subsurface Drilling Methods
- SOP-30 Field Classification and Description of Soil.

Attachments

- Attachment A EHS Support Well Construction Form
- Attachment B EHS Support Double-Cased Well Construction Form

Required Materials

- Air monitoring instrumentation (e.g., PID) and supplies
- Field logbook and field documentation
- Site plan showing borehole locations
- Health and Safety Plan (HASP)
- Personal protective equipment
- Indelible ink pens and waterproof marking pen
- Tape measure
- Camera
- Lock, if required
- Decontamination supplies
- Well Installation Form, if required.

1.0 GENERAL

Monitoring wells installed as part of groundwater investigations are intended to serve several purposes:

- To indicate the presence or absence of contaminants of concern in groundwater.
- To quantify the concentrations, sources, and vertical distributions of the chemicals of concern.
- To obtain basic hydrogeologic information including static water level, type and thickness of subsurface materials, aquifer characteristics at various depths, depth of the bedrock, etc.
- To quantify, in some instances, thickness or volume of non-aqueous phase liquids.

The selection of drilling methods and installation procedures should be based on field data collected during a hydrogeologic site investigation and/or researching available hydrogeological data. Each monitoring well should be designed and installed to function properly throughout the duration of the monitoring program. When designing monitoring wells, the following should be considered:

- Short-and long-term objectives
- Purpose of the well(s)
- Probable duration of the monitoring program
- Contaminants likely to be monitored
- Surface and subsurface geologic conditions
- Properties of the aquifer(s) to be monitored
- Well screen placement
- General site conditions, and
- Potential site health and safety hazards.

Once reliable, obtainable data has been assembled and a well design for the project has been completed, a drilling method(s) must be selected. The preferred drilling methods for installing monitoring wells are those that temporarily case the borehole during drilling and the construction of the well (e.g. hollow-stem augers, sonic). However, site conditions or project criteria may not allow using these drilling methods. and alternate methods may be required to achieve the project objectives. Subsurface drilling techniques are provided in SOP-24 Hand Auger, SOP-25 Direct Push Technologies, SOP-26 Hollow Stem Auger, SOP-27 Sonic, and SOP-28 Rotary Drilling.

1.1 Monitoring Well Versus Piezometer

There are many definitions in the literature for monitoring wells and piezometers. For the purposes of this guidance document, these definitions are provided:

Monitoring Well means a well constructed with a surface seal and a sand filter pack in accordance with accepted design practices in order to provide for the collection of representative groundwater samples for laboratory analyses. Such wells may be used to detect the presence of free product or collect water-level elevation data to aid in determining the direction of groundwater flow. A pre-packed microwell (direct-push well) is considered a type of monitoring well.

Piezometer means a permanent or temporary well that may be designed and constructed without the surface sealing or sand filter pack requirements of a monitoring well, or may not have a 2-inch (50 mm) annular space around the diameter of the well screen. This type of well is primarily used to detect the presence of free product or collect water-level elevation data to aid in determining the direction of groundwater flow.

Piezometers (often referred as temporary wells) are generally installed and removed on the same day, but in some cases may remain on-site for longer periods. In general, data obtained from a piezometer without a sand pack should be used mostly for screening.

1.2 Well Materials and Considerations

Select well screens and casings, annular sealant, and other monitoring well components composed of new materials designed to last for the duration of the monitoring program or monitoring life and any post-closure monitoring period, without loss of structural integrity and without contributing contaminants to or removing contaminants from the groundwater. The essential components of a well installation as shown in **Figure 1** include:

- Well casing
- Well screen
- Filter pack
- Annular seals (lower and upper surface seals)
- Surface completion
- Well protection.

Figure 1. Typical Well Construction
(Driscoll 1987)

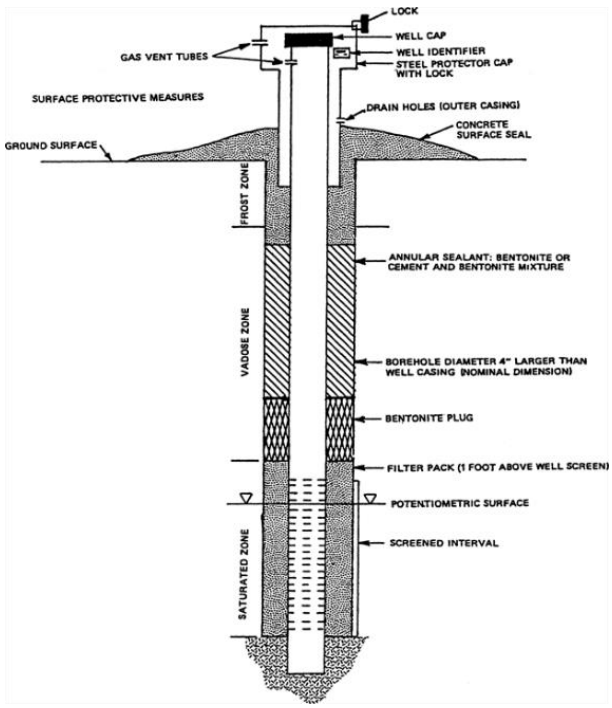

The casing provides access to the subsurface. The intake consists of a filter pack and screen. The screen allows water to enter the well and, at the same time, minimizes the entrance of filter pack materials. The filter pack is an envelope of uniform, clean, well-rounded sand or gravel that is placed between the formation and the screen. It helps to prevent sediment from entering the well. The annular seal is placed between the borehole wall and the casing and is necessary to prevent vertical movement of ground water and infiltration of surface water and contaminants. Surface protection, which includes a surface seal and protective casing, provides an additional safeguard against surface water infiltration and protects the well casing from physical damage.

Because of the need for a 2-inch (50 mm) sand pack on either side of the well screen, the minimum borehole diameter for a 2-inch inside diameter (ID) monitoring well installed with a non-direct-push rig is six inches (about 350 mm). For example, a 4 ¼-inch (114 mm) ID hollow-stem auger with 2-inch auger flighting will drill an 8 ¼-inch (214 mm) diameter borehole that will allow sufficient space for setting the well and placement of the minimum 2-inch sand pack. Hollow-stem augers with less than a 4 ¼-inch ID (114 mm) and/or less than 2-inch (50 mm) auger flighting do not allow sufficient room for proper well and sand pack placement. In some circumstances, such as when the aquifer is composed of sand that is similar to the sand pack material, exceptions to the minimum two-inch annular space for monitoring wells can be made.

For 1-inch (25 mm) ID or greater microwells installed with direct-push, there is no minimum annular space requirement because the microwells must be installed with pre-packed well screens. However, microwells are not well suited for installation in finer-grained materials such as silts and/or clays.

1.2.1 Well Casing and Screens

Casing and screen materials will be chemically non-reactive to the contaminants of concern in the groundwater. The most commonly used material includes polyvinyl chloride (PVC) and Type 304 and Type 316 stainless steel. To lesser extents, other steel formulations, polytetrafluorethylene (PTFE) or other fluoropolymers, or fiberglass-reinforced epoxy are used. Each of these materials has different

characteristics with respect to strength, resistance to chemical or microbiological attack, and resistance to chemical interference. The installation process is generally the same regardless of the casing or screening material. Do not construct screen and casing assemblies with dissimilar metals, unless separated by a dielectric bushing, to minimize galvanic corrosion of the well materials. During construction, no glues or epoxy will be used to join well casing and screen lengths.

Well casing and screens are available in threaded and unthreaded sections, typically in lengths of 5, 10, and 20 foot. The more-commonly used is threaded sections. Sections of casing and screens will be assembled on site to allow inspection immediately before installation.

Monitoring well construction commonly requires the use of standard Schedule riser to complete the monitoring well. **Figure 2** presents common casing diameter and wall thickness for well installation.

Figure 2. Casing Thickness and Diameter for Monitoring Well Materials (EPA, 1991b)

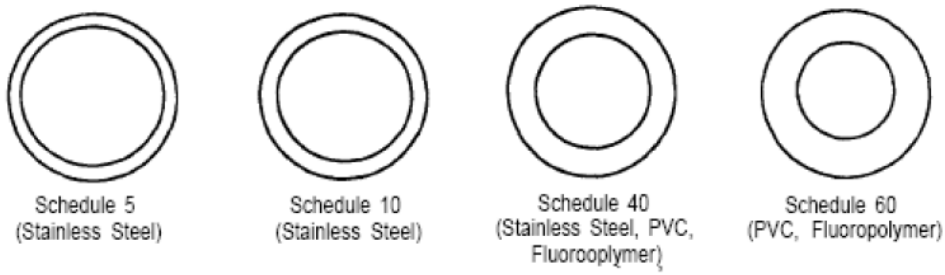

Wall Thickness (Inches)	Sch 5	Sch 10	Sch 40	Sch 80	Outside Diameter (Standard)
Nominal 2	0.066	0.109	0.164	0.218	2.375
Nominal 3	0.063	0.120	0.216	0.300	3.500
Nominal 4	0.083	0.120	0.237	0.337	4,500
Nominal 5	0.109	0.134	0.258	0.375	5.563
Nominal 6	0.109	0.134	0.280	0.432	6.625
Inside Diameter	Sch 5	Sch 10	Sch 40	Sch 80	
Nominal 2	2.245	2.157	2.067	1.939	
Nominal 3	3.334	3.260	3.068	2.900	
Nominal 4	4.334	4.260	4.026	3.826	
Nominal 5	5.345	5.285	5.047	4.813	
Nominal 6	6.407	6.357	6.065	5.761	

Note: As the schedule number increases, the wall thickness increases, and the actual inner diameter is reduced. Regardless of schedule number, casing of a particular size have the same outside diameter (not withstanding manufacturing tolerances). For example:

- A 100 mm Schedule 40 pipe has an outside diameter of 114.30 mm, a wall thickness of 6.02 mm, giving a bore of 102.26 mm.
- A 100 mm Schedule 80 pipe has an outside diameter of 114.30 mm, a wall thickness of 8.56 mm, giving a bore of 97.18 mm.

The recommended ID of a monitoring well casing should be at least 1.9 inches (50 mm), with the exception of microwells and piezometer installations.

Determining the slot size and well screen length of a well screen depends on the purpose of the monitoring well and aquifer characteristics. Screen lengths can vary, but typically range from 5 to 20 feet (1 to 5 m) in length. The proper slot size of the well screen should be determined based upon the filter pack selected for the monitoring well and the formation material. Monitoring wells typically installed in unconsolidated soil use a 20-slot (0.020-inch) well screen with a No.10-20 silica sand pack, or 10-slot (0.010-inch) well screen with a No.20-40 silica sand pack. Screen slots will be sized to prevent 90% of the filter pack from entering the well. **Figure 3** lists the recommended screen slot size and filter pack characteristics.

Figure 3. Filter Pack Characteristics and Common Screen Sizes (Nelson and Schalla, 2006)

Size of Screen Opening [mm (in.)]	Slot No.	Sand Pack Mesh Size	1% Passing Size (D_1) (mm)	Effective Size (D_{10}) (mm)	30% Passing Size (D_{30}) (mm)	Range of Uniformity Coefficient	Roundness (Powers Scale)	Fall Velocities[a] (cm/s)
0.125(0.005)	5	40-140	0.09-0.12	0.14-0.17	0.17-0.21	1.3-2.0	2-5	6-3
0.25 (0/010)	10	20-40	0.25-0.35	0.4-0.5	0.5-0.6	1.1-1.6	3-5	6-6
0.50 (0.020)	20	10-20	0.7-0.9	1.0-1.2	1.2-1.5	1.1-1.6	3-6	14-9
0.75 (0.030)	30	10-20	0.7-0.9	1.0-1.2	1.2-1.5	1.1-1.6	3-6	14-9
1.0 (0.040)	40	8-12	1.2-1.4	1.6-1.8	1.7-2.0	1.1-1.6	4-6	16-13
1.5 (0.060)	60	6-9	1.5-1.8	2.3-2.8	2.5-3.0	1.1-1.7	4-6	18-15
2.0 (0.080)	80	4-8	2.0-2.4	2.4-3.0	2.6-3.1	1.1-1.7	4-6	22-16

[a] Fall velocities in centimeters per second are approximate for the range of sand pack mesh sizes named in this table . If water in the annular space is very turbid, fall velocities may be less than half the values shown here. If a viscous drilling mud remains in the annulus, fine particles may require hours to settle.

There are two major types of screens used: continuous wire wrap screen and slotted pipe. Wire wrap provides the greatest open area resulting in higher yields. However, it is significantly more expensive than slotted pipe. Continuous slot wire wrap screen would be most effective when used to sample low yield formations.

Slotted pipe is composed of the same casing material, but it has been machine slotted to create uniform openings. Slotted screen has a smaller effective open area than continuous slot wire wrap screen but is usually adequate for wells installed in relatively shallow, permeable formation aquifers.

1.2.2 Filter Pack

The well screen should be surrounded by a permeable, course-grained sand known as the filter pack. Fill the annular space surrounding the well screen with a filter pack of uniform-grain-size sand that is coarser and has a higher permeability than the natural, surrounding formation. The filter pack should allow groundwater to flow freely into the well from adjacent formation material and minimize or eliminate fine-grain material from entering the well. The use of natural formation material as the only filter pack is not a conventional or generally acceptable practice.

Most monitoring wells within unconsolidated soils are installed with either a No.10-20 or 20-40 silica sand filter pack. The filter pack should extend above the well screen to a length of 20 percent of the well screen length, but no less than 2 feet (about 0.5 m) (ASTM D5092). The thickness of the filter pack between the borehole and the well screen should be at least 2 inches (50 mm) but no greater than 8 inches (200 mm) (EPA, 1991).

Filter pack materials must be poorly graded (well sorted) of uniform size to provide good permeability and hydraulic conductivity of the materials near the screen. The filter pack material should be obtained from known clean sources and should be well washed and free of clay, dust, and organic matter. The filter pack material should be hard and durable, clean, chemically inert, and well-rounded siliceous material. Using coarser material increases the effective well diameter.

1.2.3 Annular (Bentonite) Seal

Annular seals prevent vertical movement of water or contaminants between the filter pack, the adjacent soil formation, and the backfill material above the screen. There should be two annular seals in standard monitoring wells, one above the filter pack (lower seal or filter pack seal) and one at the ground surface (upper seal). All permanent monitoring wells should be constructed with a lower seal at the top of the filter pack to confine the well screen within the desired sampling interval. The lower annular seal should be installed at least 2-feet thick (0.5 m) on the top of the filter pack to prevent seal material from leaching into the filter pack. Pelletized bentonite is preferred for this application.

Install the upper annular seal near the ground surface to protect the well from infiltration of surface runoff and potential aboveground contaminants The upper annular seal should be installed at least 2-feet (0.5 mm) thick and extend from approximately 1 to 2 feet (0.5 m) below ground surface to 3 to 4 feet (1 m) below ground surface. This annular seal should be bentonite pellets, bentonite slurry, or similar material.

Thing to consider in placing the annular seal:

- For shallow wells in which the top of the filter pack to the ground surface is 5 to 6 feet (1.5 to 2 m), it is acceptable to combine the upper and lower annular seals into a single annular bentonite seal.
- For deeper wells, the annular space between the two seals should be filled with a bentonite slurry or grout and emplaced using a tremie pipe.
- Use fine-grain bentonite, such as granules and powder, for seals placed above the existing water level.
- A bentonite slurry or coarse pellets should be used for the bentonite seal below the existing water level.
- For wells that have the top of the well screen beginning at depths of less than 5 feet (about 1.5 to 2 m), the amount of the filter pack, filter pack seal, upper seal must be proportionately decreased in order to maintain a proper amount of sand pack above the well screen. (The thickness of the filter pack and annual seals may need to be reduced, but not eliminated).

<u>Bentonite</u>

Bentonite is composed of clay particles that expand many times the original volume when hydrated. Bentonite is available in a variety of forms, including pelletized, coarse grade, granular and powder.

- ***Pellets*** are uniform in size and consist of compressed, powdered sodium montmorillonite. They typically range from ¼ to ½ inch (5 to 10 mm) in size. Pellets expand at a relatively slower rate when compared to other forms.
- ***Coarse grade***, also referred to as crushed or chipped, consists of irregularly shaped, angular particles of montmorillonite that range from ¼ to ¾ inches (5 to 20 mm) in size.
- ***Granular*** particles range from 0.025 to 0.10 inches (about 1 mm) in size.
- ***Powdered*** bentonite is pulverized montmorillonite, factory-processed after mining. Powered and granular forms are generally mixed with water to form a slurry.

Risk of losing a slurry to the underlying filter pack and surrounding formation should be considered. Bentonite slurry with less than 30 percent solids can lose its affinity for water (i.e., loses water to the formation). Bentonite has a low solids content and therefore forms poor seals, so they are not suitable as annular seal materials and should not be used for drilling fluids/drilling fluid mud. High-solids bentonite (>30% clay solids) has been developed specifically for monitoring well construction and provides an effective seal. High-solids bentonite slurries may be formed by the addition of a swelling inhibitor to slow the swelling of the bentonite power, or addition of granular bentonite to bentonite slurry just prior to emplacement with a tremie pipe.

Neat Cement Grout

Consideration:

- Bentonite is sometimes added to cement slurry to reduce shrinkage, the bentonite causing the mixture to expand as it hydrates and swells. Bentonite is added to improve the cement's workability, reduce the weight and density of the slurry, and reduce the set strength of the cement seal.
- Upon setting, neat cement grouts often lose water into the formation and affect water quality. Neat cement typically ranges in pH from 10 to 12; therefore, it is important to isolate the annular seal from the screen and filter pack. This may be accomplished by placing a very fine-grained secondary filter pack, 2 to 3 feet thick, above the primary filter pack.
- The major disadvantages of neat cement are the heat of hydration, shrinkage upon curing, and effect on water quality. During curing, heat is released, which is generally of little concern for monitoring wells. If large volumes of cement are used or the heat is not rapidly dissipated, the resulting high temperatures could possibly compromise the integrity of PVC casing. However, the borehole for most monitoring wells is small, and heat significant enough to cause damage generally is not created. Shrinkage is undesirable because it causes cracks and voids.

Neat cement grout is comprised of Portland cement and water, with no aggregates added. Several types of Portland cements are manufactured to accommodate various conditions. **Table 1** lists the types as classified by ASTM C150-07(2007).

Table 1. ASTM Cement Designation

Cement Type	Description
Type I	General-purpose cement suitable where special properties are not required. Most common type of cement used for grouting.
Type II	Moderate sulfate resistance. Lower heat of hydration than Type I.
Type III	High early strength. Not commonly used. Ground to finer particle size, which increases surface area and reduces curing time period before drilling may resume from 48 hours to 12 hours.
Type IV	Low heat of hydration cement designated for applications where the rate and amount of heat generated by the cement must be kept to a minimum. Develops strength at a lower rate than Type I. Not commonly used.
Type V	Sulfate-resistant cement for use where ground water has a high sulfate content.
Type IA, IIA, IIIA	Air entraining cements for the same use as Types I, II, and III. Not recommended for monitoring well construction.

The American Petroleum Institute recommends a **ratio of 5.2 gallons of water per 94 pound sack of cement**. Additional water makes it easier to pump, but adversely affects the grout's sealing properties.

Excess water can cause shrinkage and separation of the cement particles, which compromises seal integrity. Guideline mixtures for grout are shown in **Figure 4**.

Figure 4. Grout Mixture Guidelines

The following table is the minimum acceptable amount of cement per ft. at 5.2 gallons of water per 94 lb. sack of cement (yields 8.82 gallons of slurry/sack) for neat cement slurry to be used in grouting wells. Table assumes no formation loss. Quantity actually used may be rounded up to the nearest 1/4 sack.

CEMENT ONLY (No Bentonite) TABLE

Hole Diameter	Hole Volume Gallons/ one ft.	Bags/ one ft.
2"	.16	.02
3"	.37	.04
4"	.65	.07
5"	1.02	.12
6"	1.47	.17
8"	2.61	.30
10"	4.08	.46
12"	5.87	.67
14"	8.00	.91
16"	10.44	1.18
18"	13.22	1.50
20"	16.32	1.85

ANNULUS / ONE FT. INTERVAL

Casing Diameter	Hole Diameter	Hole Volume	Bags/ one ft.
2"	4"	.42	.05
2"	5"	.79	.09
2"	6"	1.24	.14
3"	5"	.52	.06
3"	6"	.97	.11
4"	8"	1.79	.20
4"	10"	3.25	.37
5"	10"	2.85	.32
6"	10"	2.29	.26
8"	12"	2.84	.32
10"	14"	3.28	.37
10"	16"	5.73	.65
12"	16"	3.81	.43
12"	18"	6.59	.75
16" (O.D.)	20"	5.88	.67

BENTONITE ADDITIVE TO CEMENT TABLE

Percent Bentonite	* Gallons of water/sack of cement	Slurry Yield gallons/sack of cement	** Multiply for sacks of Bentonite required	** Multiply for sacks of cement required
10	11.7	15.78	0.103	.56
8	10.4	14.36	0.092	.61
6	9.1	12.94	0.077	.68
4	7.8	11.59	0.057	.76
2	6.5	10.17	0.032	.87
0	5.2	8.82	0.000	1.00

* Gallons of water required per 94 lb. sack of cement when dry mixed with Bentonite.
** Multiply the theoretical number of (Cement Only Table) sacks required by the corresponding decimal values for the sacks of cement and Bentonite mixture desired. A dispersant may be added if slurry becomes difficult to pump.

DRY BENTONITE

One 50 lb. bag (granular/chips) is equivalent to approximately 5.5 gal. (±10%). In order to determine a theoretical estimate of number of bags required, determine total hole volume in gallons from the ACement Only Table@ and divide by 5.5 gal./bag to obtain the number of bags of dry (granular/chips) Bentonite.

EXAMPLE: 100 ft., 4 inch diameter hole - 100 x .65 = 65. gal, 655.5 = 12 bags dry Bentonite.

1.2.4 Surface Completion and Well Protection

Two types of surface completions are typical to monitoring well installations: (1) aboveground completion and (2) flush-mounted completion. Surface completion and well protection prevent surface runoff from infiltrating the well annulus and protect the well from accidental damage or vandalism. Properly survey the well installation after completion and document the survey measurements.

The purpose of the surface seal (concrete pad) is to prevent surface water run-off from migrating down the outside of the well casing or the borehole, provide an additional surface seal (if required), protect the well

casing from damage, and to secure the well protective casing. There must be a surface seal of concrete around the protective well casing at each well. A surface seal is a separate upper annular seal installed above, but not connected to, the bentonite seal (except in very shallow monitoring wells). Because of the temporary nature of microwells, surface seals other than hydrated bentonite are not necessary.

Concrete surface pads are generally constructed as 2 feet by 2 feet (0.7 m by 0.7 m) or 3 feet by 3 feet (1 m by 1 m). Constructed concrete pads should be sloped away from the well so the slab sheds rain and surface water. If an aboveground casing riser is installed, construct with a protective casing, preferably made of steel. If a flush-mount monitoring well is installed, construct with a steel protective cap with a subsurface casing that extends approximately 2 feet below grade. The lid of the flush-mount cover is generally a bolt-down top. A traffic-rated flush mount cover may be required. Examples of above ground and flush mount type protective casing is shown in **Figure 5**.

Figure 5. **Examples of Above Ground Protective Cover, Flush Mount Covers, and Expandable Casing Cap**

Regardless of the type of protective cover, each well will be fitted with an expandable locking well casing cap (**Figure 5c**) that easily fits below the protective well monument cap and can be expanded to the diameter of the casing. The expandable well casing cap is used to prevent vandalism and to prevent exterior water from entering the well.

An expandable well casing cap with a lock will be used in all flush-mount caps. Double locks are not required on wells constructed with above grade protective covers. Instead, only an exterior lock is required on the outside of the above grade locking cover.

Document all construction details and materials used in the Field Notebook. Clearly mark monitoring wells with a unique well identifier on the inside and outside of the protective casing.

2.0 WELL CONSTRUCTION AND INSTALLATION GUIDELINES

These guidelines assume the borehole has been advanced to the appropriate depth in accordance with the appropriate Drilling Methods SOPs. Waste materials will be disposed in accordance with the Work Plan or SOP-07 Investigation Derived Waste. An EHS Support Well Construction Form is included as **Attachment A**. An EHS Support Double-Cased Well Construction Form is included as **Attachment B**.

1. Ensure any tools or equipment used in well installation are decontaminated in accordance with the procedures outlined in SOP-09 Field Decontamination.
2. Keep the well casing and screen sealed in plastic until the well is ready to be installed into the borehole.
3. Carefully assemble and install well casings and screens to prevent damage to the sections and joints.
4. If the borehole is drilled beyond the location of the well screen, the bottom of the borehole needs to be backfilled with bentonite chip or sand to raise the borehole to the required screen depth. Check with the project manager if there is a preference. Use sand if less than 1 foot (30 cm) needs to be backfilled or the total depth and screened depth are in the same aquifer. Use bentonite chips if a separate aquifer has been crossed and to prevent cross contamination. Allow the bentonite chips to hydrate. Place a minimum of 6 inches (300 mm) of sand above a backfilled bentonite seal to prevent the monitoring well from sinking into the bentonite.
5. Sections of well casing and screen are likely to be manually connected and tightened. Cross threading should be avoided. Use of mechanical methods should be used with caution to prevent damage to the well. Use of glue or solvents to connect or seal casing is prohibited.
6. Secure an end cap at the bottom of the well screen before installing section(s) of well screen into the well boring.
7. If using pre-pack well screens, take care to not tear or damage the outer fabric or screen holding the pre-pack filter sand to the well screen.
8. Lower the well casing and well screen straight and plumb and centered within the middle of the borehole. If the borehole is deep, centralizers can be placed on the well riser to keep the well screen and casing centered in the borehole annulus.
9. Suspend the well to allow some of the filter pack and (up to 6 inches (30 cm)) to fall beneath the bottom of the well to prevent sinking over time, especially in softer fine-grained soils.
10. Install the filter pack from the bottom of the borehole to at least 2 feet (up to 5 feet) above the top of the well screen. Additional time may be needed to allow the filter pack to fill around the screen in deeper wells. It may be necessary to use a tremie pipe for placement of the filter pack if the well is deep and to prevent bridging. At locations that have shallow groundwater, the filter pack can be placed to extend to at least 1 foot above the top of the screen.
11. Once the well has been placed in the borehole, the riser may need to be cut to a manageable height. Place a cap on top of the casing to prevent well materials from entering the well casing.
12. Record the material type and well materials in the logbook or the well construction form.
13. A completed monitoring well should be sufficiently straight to allow passage of pumps or sampling devices.
14. Periodically measure the filter pack during installation by using a sounder or weighted measuring tape to confirm uniform placement and prevent bridging.
15. Measure the depth of the top of the filter pack to verify the thickness of the pack and to confirm proper depth placement above the well screen (at least 2 feet (100 mm) above the screen). Under no circumstances should the filter pack extend into any aquifer other than the aquifer to be monitored.
16. Use permanent or temporary surface casing if contamination or sloughing is a potential issue.

17. Install at least 2 feet (60 cm), or as required, of lower annular seal material above the filter pack. Bentonite chips, pellets, or granules can be used by pouring them freely or through a tremie pipe, depending on the depth of the top of the filter pack and potential for bridging.
18. Install a minimum of 2 feet (60 cm) of upper annular seal material to bring up to about 1 to 2 feet (0.5 m) bgs.
19. For shallow wells or groundwater is shallow, the upper and lower annular seal may be combined so there is 2 feet (60 cm) of filter pack above the well screen and 3 to 4 feet (1 m) of annular seal.
20. Install the annular seal in 1-foot (30 mm) lifts or less and hydrate with clean, potable water between lifts.
21. Measure the depth to the seal by using a weighted tape measure, measuring rod, or similar to confirm the thickness and depth of the seal.
22. Record the filter pack and seal material details in the logbook or well construction form.
23. Allow the bentonite to completely hydrate in accordance with the manufacturer's instructions before filling the remainder of the annular space with bentonite/cement grout.
24. If the well is 30 feet or greater (greater than 10 m) in depth, pump grout or slurry into the annular space by using a tremie pipe.
25. For wells less than 30 feet deep (less than 10 m), it is recommended a tremie pipe be used to place the grout; however, in some conditions pouring the grout may be possible.
26. If more than 10 feet of standing water is present, use a tremie pipe to install neat cement and bentonite-cement grouts to displace the water. Water may need to be pumped from the annular space and contained for disposal in accordance with SOP-07 Investigation Derived Waste.
27. Record the actual volumes of bentonite and grout used during well construction in the field logbook and explain any discrepancy between the calculated and actual volume.
28. Submerge the end of the tremie pipe in the sealing material when installing a slurry or grout.
29. When using a slurry or grout, allow 24 hours between installation of the annular space seal and installation of the protective pipe cover. Fill any settlement in the annular space seal before installing the protective cover.
30. For an above-ground protective cover:
    a. Extend the well casing approximately 2 to 3 feet above the ground surface.
    b. Extend the protective casing at least 6 inches (15 cm) above the top of the well casing and at least 2.5 feet (1 m) into the ground. Install the protective casing in a plumb, vertical position.
    c. In areas that experience frost heaving, extend the protective casing from below the depth of frost penetration (3 to 5 feet (1 to 1.5 m) below grade, depending on local conditions) to approximately 6 inches above the top of the well casing.
    d. Install the protective casing before the upper annular seal sets.
    e. Seal and immobilized the protective casing within the concrete monument foundation. Drill a ¼-inch-diameter weep hole in the protective casing approximately 6 inches (15 cm) above ground surface to permit water to drain out of the annular space between the protective casing and the riser. In winter, this hole will also prevent water freezing between the protective casing and the well casing.
    f. Place coarse sand or pea gravel (or similar) in the annular space above the dry bentonite pellets and within 6 to 12 inches below the top of the well casing to allow water to drain from within the protective casing and prevent insect habitation.
    g. The protective outer casing may be painted, if requested.
31. For a flush-mount protective cover:
    a. Cut off the well casing below grade, leaving enough space to install a leak-proof, locking well casing cap.
    b. The top of the steel protective cap and protective casing must be flush with the ground or slightly elevated so surface water drains away from the well.

c. It is recommended to drill an approximately ¼-inch-diameter weep hole in the protective casing approximately 18 to 24 inches (50 to 60 cm) from the top of the protective casing to permit water to drain out of the annular space between the protective casing and the well casing.
d. Install the protective casing before the upper annular seal sets, making sure that the weep hole is above the top of the upper annular seal.
e. Seal and immobilized the protective casing in a concrete, flush-mount foundation, if possible. Where significant amounts of runoff occur, additional protection measures may be required.
f. For flush-mounted completions, be careful to construct watertight bonds between the protective structure and the cement surface seal.
g. Make sure there is sufficient clearance, usually 6 inches (15 cm), between the steel protective cap and the top of the well casing.
h. Place coarse sand or pea gravel (or both) in the annular space within the protective casing to within 2 to 3 inches below the top of the well casing to allow water to drain from within flush-mount monument and prevent insect habitation.

32. Install a weatherproof, locking well monument cap on the top of the protective casing so there is adequate clearance between the top of the well casing cap and the bottom of the well monument cap.
33. A concrete surface pad may be placed around the well protective casing. The pad should be approximately 4 inches thick and sloped away from the protective casing.
34. Install bollards around wells where traffic might threaten the integrity of the well.
35. The well ID should be noted inside of the protective casing, on top of the expandable cap, or other location. If required by the project, a stainless steel well identification will be attached to the inside of the protective casing.
36. Record the final construction details such as the protective casing type and details of the construction pad in the field logbook or well construction form.

2.1 Double-Cased Wells

Double-cased wells should be constructed when there is reason to believe interconnection of two aquifers by well construction may cause cross-contamination or when flowing sands make it impossible to install a monitoring well using conventional methods. A highly contaminated surface soil zone may also be cased off so that drilling may continue below the casing with reduced danger of cross contamination.

1. A pilot borehole may be bored through the overburden and/or the contaminated zone into the clay confining layer or bedrock.
2. An outer casing (sometimes called surface or pilot casings) should be placed into the borehole. The borehole and outer casing should extend into tight clay a minimum of 2 feet (60 cm) and into competent bedrock a minimum of 1 foot (30 cm) and up to 5 feet (1.5 m), or as outlined in the Work Plan. The total depths into the clay or bedrock will vary, depending on the plasticity of the clay and the extent of weathering and\or fracturing of the bedrock.
3. The size of the outer casing should be of sufficient ID to contain the inner casing, and the 2-inch minimum annular space. In addition, the borehole should be of sufficient size to contain the outer casing and the 2-inch minimum outer annular space, if applicable.
4. The outer casing should be grouted using a tremie or the displacement method from the bottom to the ground surface.
5. The grout should be pumped into the annular space between the outer casing and the borehole wall.
6. A minimum of 24 hours should be allowed for the grout plug (seal) to cure before attempting to drill through it. The grout mixture used to seal the outer annular space should be either a neat

cement, cement/bentonite, cement/sand, or a 30% solids bentonite grout. However, the seal or plug at the bottom of the borehole and outer casing should consist of a Type I Portland cement/bentonite or cement/sand mixture. The use of a pure bentonite grout for a bottom plug or seal is not acceptable, because the bentonite grout cures to a gel-like material, and is not rigid enough to withstand the stresses of drilling.

7. When drilling through the seal, care should be taken to avoid cracking, shattering, or washing out the seal. If caving conditions exist so that the outer casing cannot be sufficiently sealed by grouting, the outer casing should be driven into place and a grout seal placed in the bottom of the casing.
8. Record the details of the outer casing in the field logbook or double-cased well construction form.
9. Continue drilling and well installation with the guidelines provided in Section 2.0.

2.2 Microwells

Microwells are small-diameter monitoring wells used primarily monitor the static water level or obtain a finite number of water samples for water quality or contaminant screening purposes (a temporary well). Microwells are generally installed in boreholes driven by direct push technologies and are typically less than 2 inches (50 mm) in diameter. Microwells installed by the direct push technology method use pre-packed well screens. Microwells have the same installation requirements as conventional wells except that a sand barrier is installed directly above the pre-packed well screen to prevent grout from entering the screens. Other than the following modification, installation of a microwell is the same as a monitoring well:

- Place a sand barrier directly above the pre-packed well screen in the annulus between the well casing (riser pipe) and the borehole wall as the probe rods are retracted.
- The sand barrier should extend 2 feet above the top of the pre-packed well screen.
- Install an annular seal from the filter pack to the top of the well.
- The annular seal must prevent vertical migration of liquids into the borehole annular space.

2.3 Bedrock Wells

The preferred method of well completion for the bedrock wells is open-hole. However, if the open borehole is subject to cave-in, the well will be completed as a screened and cased sand-packed well.

Bedrock wells will be advanced until a minimum of 5 feet (1.7 to 2 m) of competent rock has been drilled. In general, a smaller diameter hole is advanced to log the bedrock and overdrilling of the borehole is required. Minimum borehole diameter should be 8 inches (20 cm). The drill string will be pulled from the borehole and 6-inch (15 cm) ID Schedule 40 or 80 PVC, unless otherwise noted, casing inserted. A Portland cement/bentonite grout will be pumped through a tremie pipe (placed at the bottom of the borehole) into the annular space outside the casing to secure the casing and at the bottom of the borehole (inside the casing so an inside plug is formed). After the grout has set (minimum of 24 hours), the cement will be drilled out (if needed) and the borehole advanced to the desired depth.

3.0 RECORDS

Field notes will be kept in a bound field logbook or approved field documentation following the format specified in SOP-04 Field Documentation. Specific documentation may include health and safety documentation, a boring log, a well construction form, and photographs. Required records include:

- Required site maps and HASP forms
- Utility clearance documentation
- Instrument calibration
- Borehole log details
- Well Construction data (Form or similar) should include, but is not limited to
  - Facility name where the borings are located
  - Well and/or boring number
  - Start and completion date and time
  - Name of the individual logging the well and/or boring
  - Driller's name and name of drilling company
  - Drilling method
  - Drill make and model
  - Borehole diameter and depth
  - Type, diameter, and depth of well
  - Type and length of casing and screen
  - Slotted screen size
  - Manufacturer, amount, and grain size of sand pack
  - Type and amount of seal material
  - Type, mixture, and amount of grouting material
  - Protective cover details
  - Depth to top of screen, sand pack, and bentonite seal
  - Top of well casing elevation in feet.
- Weather observations (e.g., temperature, wind speed, cloud coverage)
- Any problems encountered or deviations from this SOP
- Summary of daily activities and personnel on-site.

ATTACHMENT A EHS SUPPORT SINGLE WELL CONSTRUCTION FORM

EHS Support
consider it done

Well ID:

Project / Site:	
Location / Address:	
Client / Owner:	Project Number:
Easting:	Northing:
Drilling Co.:	Drilling Method:
Drilled by:	Logged by:

Sketch Map

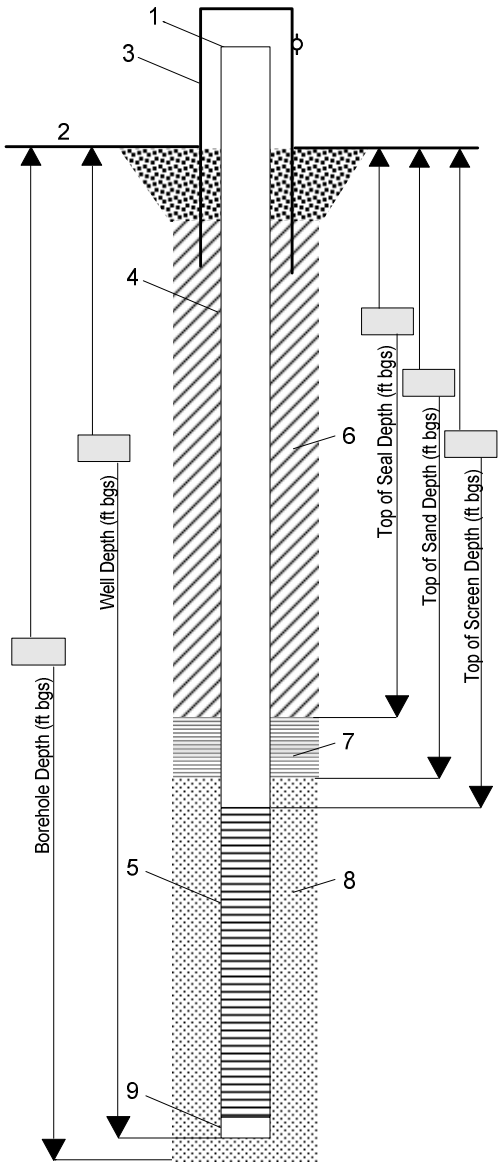

Boring Diameter (in.) _____

Well Installation Date _____

Elevation Datum _____

1. Top of Casing Elevation (ft msl) _____
2. Ground Surface Elevation (ft msl) _____
3. Wellhead Cover Type
   a) Cover (Flush or Above Ground) _____
   b) Concrete Pad Dimensions (ft.) _____
4. Well Casing
   a) Material _____
   b) Diameter (in.) _____
   c) Length (ft.) _____
5. Well Screen
   a) Material _____
   b) Diameter (in.) _____
   c) Length (ft.) _____
   d) Type (slotted or wound) _____
   e) Opening Size (in.) _____
6. Grout
   a) Type _____
   b) Description/Formula _____
   c) Quantity _____
7. Seal
   a) Manufacturer/Type _____
   b) Quantity _____
8. Filter Pack
   a) Manufacturer _____
   b) Filter Pack Size _____
   c) Quantity _____
9. Sump or End Cap Length (ft.) _____
10. Drilling Fluid
    a) Additive _____
    b) Description/Formula _____
    c) Quantity _____
    d) Mud Weight _____

Well Development Date _____

Static Water Level _____ bTOC or bgs

Comments:

Completed by: _____

ATTACHMENT B EHS SUPPORT DOUBLE CASED WELL CONSTRUCTION FORM

EHS Support
consider it done

Well ID:

Project / Site:	
Location / Address:	
Client / Owner:	Project Number:
Easting:	Northing:
Drilling Co.:	Drilling Method:
Drilled by:	Logged by:

Sketch Map

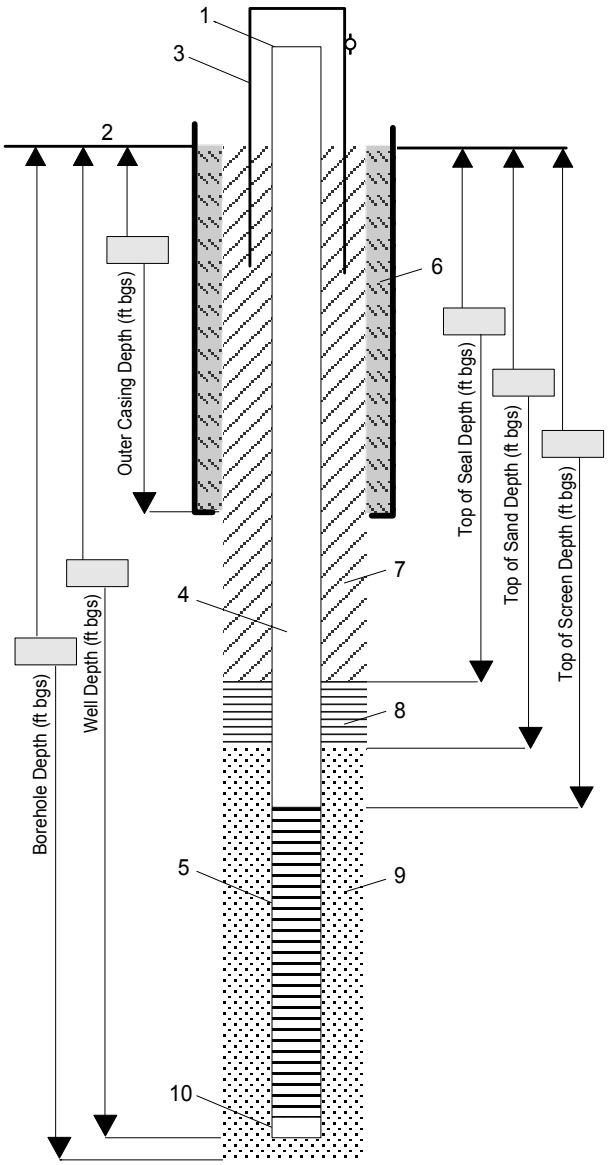

Boring Diameter (in.) _____

Outer Casing Installation Date _____

Well Installation Date _____

Elevation Datum _____

1. Top of Casing Elevation (ft msl) _____
2. Ground Surface Elevation (ft msl) _____
3. Wellhead Cover Type
   - a) Cover (Flush or Above Ground) _____
   - b) Concrete Pad Dimensions (ft.) _____
4. Well Casing
   - a) Material _____
   - b) Diameter (in.) _____
   - c) Length (ft.) _____
5. Well Screen
   - a) Material _____
   - b) Diameter (in.) _____
   - c) Length (ft.) _____
   - d) Type (slotted or wound) _____
   - e) Opening Size (in.) _____
6. Outer Casing
   - a) Material _____
   - b) Diameter (in.) _____
   - c) Length (ft.) _____
   - d) Grout Type _____
7. Grout
   - a) Type _____
   - b) Description/Formula _____
   - c) Quantity _____
8. Seal
   - a) Manufacturer/Type _____
   - b) Quantity _____
9. Filter Pack
   - a) Manufacturer _____
   - b) Filter Pack Size _____
   - c) Quantity _____
10. Sump or End Cap Length (ft.) _____
11. Drilling Fluid
    - a) Additive _____
    - b) Description/Formula _____
    - c) Quantity _____
    - d) Mud Weight _____

Well Development Date _____

Static Water Level _____ bTOC or bgs

Comments:

Completed by: _____

FLUID MEASUREMENT

PURPOSE

This SOP provides personnel procedures to use in measuring the depth to water, the depth to non-aqueous phase liquids, and the total depths in monitoring wells, piezometers, water bores, or other wells or access points (extraction wells, injection wells, etc.). For this SOP, the term "well," "monitoring well," or "water bore" will be used as the generic term for a water monitoring point.

Relevant EHS Support SOPs

- SOP-04 Field Documentation
- SOP-09 Equipment Decontamination
- SOP-42 Well Development
- SOP-43 to SOP-47 Groundwater Sampling SOPs
- SOP-48 to SOP-50 Aquifer Testing SOPs

Attachments

- Attachment A Fluid Level Monitoring Forms

Required Materials

- Air monitoring instrumentation (e.g., PID) and supplies
- Field logbook and field documentation
- Site plan showing borehole locations
- Health and Safety Plan (HASP)
- Indelible ink pens and waterproof marking pen
- Fluid measurement device (e.g., water level indicator, interface probe)
- Extra batteries
- Paper towels and trash bags
- Decontamination supplies
- Information about the well or borehole including well construction details, previous well gauging data, if available.

1.0 FLUID LEVEL MONITORING

Water level data is generally used for several purposes during a site investigation, including:

- Determination of horizontal and vertical hydraulic gradients
- Monitoring of changes in groundwater levels over time
- Assessment of surface water/groundwater interaction that occurs during various flow conditions
- Estimation of aquifer properties after aquifer testing
- Calculation of purge volume of standing water in the well for well development or water sampling
- Monitoring recharge during and after purging and aquifer testing.

A water level meter will typically be used to measure the groundwater levels and total depths. If non-aqueous phase liquid (NAPL) is present in the well, an oil-water interface probe will be used. NAPL level data is generally used for purposes of estimating NAPL volume, extent, or properties; and NAPL stabilization or stability.

A number of devices are available for the collection of fluid level measurements in monitoring wells. The most commonly used (and covered in this SOP) include an electric water level sounder and an interface probe (often times called a membrane interface probe or an oil-water interface probe). Other types of water level indicators and recorders include weighted steel tape, chalked tape, sliding float method, airline pressure method, and automatic recording methods (data loggers). These methods are primarily used for closed systems or permanent monitoring wells.

1.1 General Well Monitoring Considerations

General knowledge of the well construction, former fluid levels, and groundwater analytical data is helpful before field mobilization. This data can be useful in determining the monitoring order of the well (less contaminated to more contamination), and can be used to confirm or deny that current measurements comply (within a certain level of accuracy) with historical measurements.

Fluid levels and well depth measurements should be made relative to an established reference point on the well casing and should be documented in the field records. This reference point is usually identified by a permanent marker marking on the top of a polyvinyl chloride (PVC) well riser or by notching the top of casing with a chisel for stainless steel wells. Whether a marking is present or not, the north side of the top of casing is considered the general convention reference point.

Fluid levels should be allowed to equilibrate to atmospheric conditions after removing the sealing caps. Changes in fluid levels generally occur due to:

- Atmospheric pressure changes
- Tidal influences
- Changes in river stage, impoundments levels, or flow in unlined ditches
- Pumping of nearby wells
- Precipitation.

There are no set guidelines and appropriate equilibration times can range from minutes to hours depending on well recharge, local geology and topography, and project objectives. If fluid levels appear to rise or fall during the measurement process, allow at least three to five minutes to assess if levels have stabilized. If levels appear to change, a best determination should be made (i.e., allow more stabilization time) when to collect the water level.

1.2 Water Level Monitoring

Water level meters use a battery-powered probe assembly attached to a cable marked in 0.01-foot (5 millimeters) increments. These types of instruments consist of a spool of dual conductor wire and a probe attached to the end and an indicator. When the probe comes in contact with a fluid, the circuit is closed and a meter light and/or audible buzzer attached to the spool will signal contact. Note: A water level indicator is not capable of distinguishing between water and other fluids with a density close to that of water. Commonly used water level indicators are shown in **Figure 1**.

Figure 1 Water Level Indicators (Solinst and Heron)

Water level measurements are commonly taken in each monitoring well immediately prior to, during, and following well development (SOP-42 Well Development), prior to, during, after well purging and sampling depending on the sampling method (SOP-43 to SOP-47), and for any aquifer testing (SOP-48 to SOP-50). Water level measurements may also be taken to monitor or generate water table or piezometric surfaces. When measuring wells for monitoring potentiometric surface, and if the analytical concentrations in groundwater is known for each of the wells, it is advisable to collect water levels beginning with the least contaminated well(s) and progressing to the most contaminated well(s).

1.2.1 Water Level Measurement Procedures

1. Decontaminate the water level indicator in accordance with the procedures described in SOP-09 Equipment Decontamination.
2. Note well ID, time of day, and date in site logbook or the appropriate field form.
3. Open well and remove well cap.
4. If required in the project work plan, monitor headspace of well with a PID or plan-specified detector to assess presence of volatile organic compounds. Record results.
5. Turn on the indicator. Depress the "test button" to ensure the indicator is operating correctly. When the "test button" is depressed, the meter light should illuminate and the audible buzzer should emit a tone. If not, assess problem.
6. Ensure the indicator's reel is not "locked." If it is, loosen the lock.
7. Slowly lower the water level indicator probe down the monitoring well until the probe contacts the water surface, as indicated by the audible alarm. Do not let the probe tip and tape free-fall down the well. Always hold onto the meter's reel handle.
8. Raise the probe slowly out of the water until the audible alarm stops. Continue raising and lowering the probe until a precise level is determined within 0.01 foot or 5 millimeters.
9. Record the water level in the field logbook or approved field documentation.
10. Decontaminate the water level indicator for measurement at the following well.

1.2.2 Total Well Depth Measurement Procedures

Total depth measurements should be routinely conducted on wells as part of routine maintenance (i.e., ensuring the well has not been compromised or is filling with sediment). Collection of total depths for this SOP refers to wells or boreholes that do not have dedicated pumps or extraction equipment (e.g., monitoring

wells, piezometers). If total depths are requested on wells that have dedicated equipment, construction, operation, and extraction equipment details should be made available to assess the ability to collect a total depth reading, if a system needs to be de-energized, etc.

A water level indicator should be used to measure the total depths of wells that do not a separate-phase liquid.

Use the following procedures to measure the total depth of a monitoring well:

1. Visually inspect the probe tip. Confirm the zero measurement point **(Figure 2)**.
2. Slowly lower the water level meter until the cable goes slack (assume to be the bottom of the well). Do not let the probe tip and tape free-fall down the well. Always hold onto the meter's reel handle.
3. Gently raise and lower the water level meter probe to tap the bottom of the well.
4. Record the reading on the cable at the established reference point to the nearest 0.01 foot or 5 millimeters.
5. If there is an offset [.g., 0.3 feet (9 cm) for some Solinst or Heron indicators] between the bottom of the probe and the water level sensor **(Figure 2)**, adjust the total depth measurement accordingly (i.e., add the additional length from the zero measurement point).
6. Record the total depth measurement in the field logbook or approved field documentation.

Figure 2 Comparison of Zero Measurement Points at the Top of the Probe and 0.3 Feet (9 cm) Above the Tip of the Probe

1.3 NAPL Monitoring and Procedures

The interface probe device is very similar to a water level indicator in that the probe is operated from a 9-volt battery, is connected to a measuring tape that measures to the nearest 0.01 foot or 5 millimeters, and contains a receiver with an audio and/or visual signal that indicates when phase changes occur. The difference from the water level indicator is that the device detects the difference in conductivity or specific gravity between the aqueous and nonaqueous phases in the well. The device detects the presence of both light NAPL (LNAPL) (floating) and dense NAPL (DNAPL) (sinking) in water wells.

1. Decontaminate the interface probe in accordance with the decontamination procedure described in SOP-09 Equipment Decontamination.
2. Note well ID, time of day, and date in site logbook or the appropriate field form.
3. Open well and remove well cap.
4. If required in the project work plan, monitor headspace of well with a PID or plan-specified detector to assess presence of volatile organic compounds. Record results.
5. Turn on the indicator. Depress the "test button" to ensure the indicator is operating correctly. When the "test button" is depressed, the meter light should illuminate and the audible buzzer should emit a tome. If not, assess problem.
6. Ensure the indicator's reel is not "locked." If it is, loosen.

7. Slowly lower the indicator probe down the monitoring well until the probe contacts the water surface or LNAPL, as indicated by the audible alarm. Do not let the probe tip and tape free-fall down the well. Always hold onto the meter's reel handle.
8. For LNAPL:
   - Raise probe out of LNAPL until the audible alarm stops. Continue raising and lowering the probe until a precise top measurement level is determined within 0.01 foot. Record the depth.
   - Very slowly lower the probe through the LNAPL until any audio (or visual queue) is emitted from the indicator (it is important to go slowly to avoid potential mixing at the LNAPL and water interface). The audio (or visual queue) indicates the phase has passed into water. Raise and lower the probe slowly through the alternative sound depth 2 to 3 times to achieve a better lower depth for the LNAPL depth.
   - Measure the lower LNAPL depth to the nearest 0.01 foot or 5 millimters. Record the depth.
9. For DNAPL:
   - Once the water level depth has been recorded, continue to lower the interface probe through the water column slowly. Do not let the probe tip and tape free-fall down the well.
   - Measure the upper depth of the DNAPL once an audio or visual change is emitted from the indicator. Raise and lower the probe through the alternative sound depth 2 to 3 time to achieve a better upper depth measurement for the DNAPL. Record the depth.
   - Do not continue any measurements through the DNAPL. Retrieve the probe.
10. Decontaminate the interface probe for NAPL measurement at the following well.

Note any change in the tone emitting from the interface probe when gaging for NAPL (along the length of the water column). If changes are noted at a mid-well depth, the indicator may be sensing a NAPL phase or dissolved phase present in the middle of the aquifer (i.e., neither LNAPL nor DNAPL).

1.4 Common Problems and Corrective Actions

All measuring tapes should be inspected prior to use for kinks, cracks, or tears and, if present, repaired or replaced with undamaged equipment. Bends and kinks may affect depth accuracy. The most-common problems that occur during fluid level measurement include:

No signal (audible or visible) when unit is turned on.

- Corrective Action:
  - The battery is discharged. Check or change battery.
  - The circuit is malfunctioning.

No indication of water.
Corrective Action:

- The conductive contact is dirty. Clean the contact.
- There is an open connection in the tape. Replace tape and/or probe. The circuit is malfunctioning.

The signal (audible or visible) is intermittent.
Corrective Action:

- There is an open connection in the tape. Replace tape and/or probe.
- There is a loose connection in the circuit or the probe. Repair the connection.
- Water may be cascading in from a damaged well riser or in from soil or rock layers is in an open-hole or rock well. Continue to lower the tape until the probe contacts water to emit a solid tone.

The signal (audible or visible) is continuous when not in water.
Corrective Action:

- The conductive contact is dirty (causing bridging). Clean the contact.
- There is a short in the tape and/or probe. A short in the tape usually is observed by missing plastic along the tape and exposure to the underlying wire. Replace tape and/or probe.

2.0 RECORDS

Field notes will be kept in a bound field logbook or approved field documentation following the format specified in SOP-04 Field Documentation. The following information should be recorded when conducting fluid measurements:

- Well identification
- Depths to water, NAPL, and total depth
- Date and time
- Site conditions (e.g., floating oil or debris, gassing)
- Weather observations (e.g.,, wind speed, sunny or cloudy sky)
- Monitoring equipment used
- Any unusual well or groundwater observations.

ATTACHMENT A FLUID LEVEL MONITORING FORMS

EHS Support
consider it done

FLUID LEVEL MONITORING FORM

Project: _____

Project Number: _____

Project Location: _____

Field Technician(s): _____

Weather: _____

Equipment: _____

Well ID	Top of Casing Elevation	Ground Surface Elevation	Well Info (from boring logs)			Date	Time	Product Level	Water Level	Total Depth	Comments
	(feet msl)	(feet msl)	Total Depth (feet bgs)	Screened Interval (feet bgs)	Screened Elevation (feet msl)			(feet bTOC)	(feet bTOC)	(feet bTOC)	

msl - mean sea level
bgs - below ground surface
bTOC - below top of casing

Signature: _____

EHS Field Form 021
Issue Date: August 18, 2014
Revision No: 00
Revision Date:

EHS Support
consider it done

FLUID LEVEL MONITORING FORM

Project: _____

Project Number: _____

Project Location: _____

Field Technician(s): _____

Weather: _____

Equipment: _____

Well ID	Date	Time	Product Level (feet bTOC)	Water Level (feet bTOC)	Total Depth (feet bTOC)	Comments

bTOC - below top of casing

Signature: _____

SOP-42 WELL DEVELOPMENT

PURPOSE

This SOP provides an overview of well development practices. The purpose of well development is to ensure removal of fines from the vicinity of the well screen. This allows free flow of water from the formation into the well and reduces the turbidity of the water during sampling events. Project work plans that include well development should be compliant with federal, state, and local regulations and guidelines.

This SOP applies to the development of newly installed wells or water bores, and may be applicable to those wells requiring re-development. The SOP identifies the most commonly used well development methods including bailer, mechanical surging, and pumping/overpumping. This SOP does not include other types of well development methods (e.g., backwashing, jetting) or the use of chemical additives during well development.

Relevant EHS Support SOPs

- SOP-04 Field Documentation
- SOP-07 Investigative Derived Waste
- SOP-08 Field Equipment Operation and Calibration
- SOP-09 Equipment Decontamination
- SOP-40 Monitoring Well Design and Installation
- SOP-41 Fluid Measurement.

Attachments

- Attachment A Well Development Form

Required Materials

- Air monitoring instrumentation (e.g., PID) and supplies
- Water quality meters for temperature, conductivity, pH, and turbidity
- Field logbook and field documentation
- Site plan showing well or water bore locations
- Health and Safety Plan (HASP)
- Indelible ink pens and waterproof marking pen
- Submersible pump, controller, and power source—generator or battery
- Teflon or polyethylene tubing
- Surge block
- Mechanical reel or truck-mounted wireline rig for deep wells
- Stainless steel, Teflon, or disposable bailer, new rope
- Decontamination equipment and supplies
- Bucket, drums, or other large container for storing or transporting development water.

1.0 WELL DEVELOPMENT

Well development methods vary with the physical characteristics of the geologic formation in which the monitoring well or water bore is screened, well construction details, the drilling method used during the borehole advancement, and the quality of the water. Well development is conducted to improve the well or water bore yield. The purpose of well development is to:

- Remove any drilling fluid introduced during the drilling process.
- Remove any sediment that may be present in the well casing.
- Reduce the compaction and the intermixing of grain sizes produced during drilling by removing fine material from the pore spaces in the filter pack.
- Remove the filter cake or drilling fluid, if present, that coats the borehole.
- Create a graded zone of sediment around the screen to help lower turbidity.

Most well development methods require the application of sufficient energy to disturb the filter pack, thereby freeing fine particles and allowing them to be drawn into the well, while the coarser particles then settle around and stabilize the screen. Energies needed or produced from the various well development methods (from lowest to highest) are:

- Bailer
- Pumping/Overpumping
- Surging
- Backwashing
- Jetting
- Compressed air (with appropriate filtering): airlift pumping and air surging.

Note: The larger the screen-slot openings, the more energy that can be transmitted into the formation to aid in development of the well. Well development using backwashing, jetting, and the compressed air methods are not well development methods included in this SOP.

1.1 Well Development Considerations

Well development activities are generally performed 24 to 72 hours following well installation and construction. The length of time required between well installation and well development may be dictated by federal, state, and local regulatory requirements, well construction details, depth of well, formation details, or energy required to develop the well. Development activities on monitoring wells completed with grout seals should be conducted with care. The grout should be allowed to “set up” for a minimum of 72 hours prior to commencing development activities. Well development should be started slowly and gently and then performed with increasing vigor as the well is developed.

Notes that may provide insight to the well construction techniques, water quality, or hydraulic characteristics of the well or borehole should be reviewed prior to well development. For instance, if water is introduced to the borehole during drilling advancement, at a minimum, that volume of water needs to be removed during development.

Damage can occur to the well screen during well development. Equipment can break or wear the well screen during surging and/or purging. Care should be taken to avoid any damage to the well screen.

If non-aqueous phase liquid is encountered or suspected, additional well development cautions should be implemented--such as use of disposable equipment, ensuring the types of equipment used can be decontaminated, additional personal protective equipment, or placement of plastic sheeting around the well.

Rock wells can be developed using the same methods as screened wells. Development in rock wells should be completed using surging and purging methods across the length of the exposed rock and all fractures or crevices.

1.2 General Well Development Procedures

The well development process can vary based on project work plan and well-specific details, and procedures may need to be adjusted to accompany variations. Various well development methods are described in **Sections 1.2.1** to **1.2.4**. In general, well development procedures are as follows:

1. Field equipment will be calibrated in accordance with the guidelines provided in SOP-08 Field Equipment Operation and Calibration or the manufacturer's manual.
2. Field equipment will be decontaminated in accordance with SOP-09 Field Decontamination or new disposable equipment will be used as appropriate.
3. Open the well. If required, use a photoionization detector or equivalent to measure for the presence of volatile organic compounds. Record the results of the photoionization detector measurement in field logbook or approved field documentation.
4. Measure the depth to water and total depth of the well using a water level indicator. If NAPL is present, use an interface probe for fluid measurements and total depth. Fluid levels or total depths will be measured in accordance with the guidelines provided in SOP-41 Fluid Measurements. Record the measurements in the field logbook or approved field documentation.
5. Measure the nominal inside diameter of the well casing.
6. Calculate the volume of water in the well (considered 1 well volume) using one of the following equations:

   $$V = \Pi r^2 L \text{ (cf)}$$

   Where:
   - V = well volume (gallons or litres)
   - Π = pi (3.14)
   - r = radius of monitoring well in feet or meters (L)
   - L = height of the water column in feet or meters (the height of the water column is determined by subtracting the depth to water from the total depth of the well).
   - cf = conversion factor (V/L^3)
     - US Customary Units = 7.48 gal/ft^3
     - Metric Units = 1,000 L/m^3
7. Or locate the casing diameter using **Table 1** below. Multiply the corresponding Volume of 1 length (foot or meter) per water column (H1) times the height of the water column (L).

   $$V = L \text{ (H1)}$$

Table 1 Approximate Casing Volumes for Common Casing Sizes

US Customary Units		Metric Units	
Sch40 PVC Casing Inner Diameter (inches)	Volume of 1 foot per water column (H1) (gal)	Casing Diameter (mm)	Volume of 1 meter per water column (H1) (Liter)
1	0.04	50	2
2	0.16	80	5
3	0.35	100	8
4	0.67	125	12.5
6	1.47	150	17.7

8. Record the calculated well volume in the field logbook or field documentation.
9. Develop the well using one or more of the following well development or purging criteria:
   - The project work plan
   - Federal, state, or local regulations or guidelines
   - Removal of a minimum of 10 well volumes plus drilling fluid volume added, if any, during the drilling process
   - Removal of volumes of water to water quality parameter stabilization
   - Removal of volumes of water until turbidity is below 50 nephelometric units. (Whilst this is often cited as a criterion for development, several factors, such as pumping rates or formation type, can impact the turbidity.)
   - Pumping the well to "dryness" and allowing groundwater to recover to a minimum of 75 percent of the initial static water level, before pumping "dry" again.
10. Assemble the well development equipment and water quality monitoring equipment.
11. Engage the well development method. Record the start time of well development.
12. Collect water samples at consistent sample intervals. Sample intervals can be measured at timed intervals (e.g., 3, 4, 5 minutes) or volume intervals (e.g., 10, 20, 30 gallons or liters). Alternating from a purging methods to collection of water sample for field parameter measurements may be required for some well development methods.
13. Water quality probes will be used to monitor water quality for (a minimum) of temperature, conductivity, pH, and turbidity during development. If water quality stabilization is part of the well development process, water quality field parameters will be considered stabile when 3 consecutive readings are within 10%.
14. Record the time, temperature, conductivity, pH, and turbidity measurements, visual and olfactory observations, color, water level (if possible), other water quality criteria (if required), and volume removed at each interval.
15. Place the discharged water into a bucket or pump directly into an appropriate container. Dispose of the discharge water or wastes in accordance with SOP-07 Investigative Derived Waste.
16. Continue to develop the well or water bore until representative water is:
    - Free of the drilling fluids, cuttings, or other materials introduced during well construction;
    - When pH, temperature, turbidity, and specific conductance readings have stabilized; and/or,
    - Visually clear of suspended solids.
17. The minimum duration of development will vary in accordance with the method used to develop the well or water bore.
18. Record the final water quality measurements once the well or water bore is considered developed.
19. Measure the final depth to water and total depth once all well development equipment has been removed from the well or water bore.
20. Restore the location and site per the project work plan.

1.2.1 Bailer Method

A bailer is hollow tube made of stainless steel, Teflon, or polyvinyl chloride (PVC) and has a smaller diameter than the well casing diameter. Water is allowed to enter the bailer through a hole at the bottom of the bailer that contains a check ball. Upon retrieval of a filled bailer, the check ball prevents water from reentering the formation. A weighted bailer should be taken into account to overcome surface tension, especially in wells that have a large screened interval or large saturated screen length.

The bailer method allows for the bailer to fall freely through the borehole until it strikes the water surface. The contact of the bailer produces a downward force and causes water to flow outward through the well screen, breaking up bridging that may have been developed around the screen. As the bailer fills and is

rapidly withdrawn from the well, the drawdown created causes fine particles to flow through the well screen and into the well or water bore.

Development of a well using the bailer method is as follows:

1. Open the top of the plastic sleeve to expose the bailer hook. Leave the bailer in the plastic sleeve until ready to deploy into well or water bore.
2. Tie new rope or strings to the bailer hook located at the top of the bailer. Ensure the knot of the rope or string is strong and secure enough to hold the bailer weight when filled with water and can endure the raising/lowering process during development.
3. Bailer and rope/string should be disposable or dedicated to each well location. If the bailer is dedicated, secure the rope/string in a manner so the bailer and rope/string is not "lost" in the well or water bore.
4. Ensure the rope or string is of sufficient length to lower the bailer to the bottom of the well or water bore.
5. Remove the bailer from the plastic sleeve.
6. Place the bailer into the well and water column and lower the bailer via the rope/string into the water.
7. Allow the bailer to fill with water.
8. Once the bailer is filled with water, retrieve the bailer.
9. Empty the bailer by turning the bailer upside down and allowing the water to discharge into a bucket or container, or into a water quality measurement cup.
10. Repeat steps (6) to (9) until development criteria are met.
11. An effort should be made to allow the bailer to traverse the entire length of the saturated well screen, and water should be removed from various intervals within the screen.
12. Lower the bailer to the bottom of the well and use rapid short strokes to agitate and suspend solids that have settled to the well bottom. This motion will enhance removal of sand and fine particles.
13. If the well or borehole is purged dry, water should be allowed to recover to a minimum of 75 percent of the initial static water level, if possible.

1.2.2 Inertial Pumping Method

Inertial pumping includes a length of tubing fitted at the bottom end with a one-way footer (ball) valve. The tubing and footer valve are submerged in the water, and water is allowed to enter the tube through the valve. The tube is then moved up- and downward making use of the inertia of the water causing both a surging and purging action. Water continually moves into the tubing and the check ball prevents water from moving back into the formation. The water is continually pushed upward until it is discharged from the top of the tubing **(Figure 1)**. A drive mechanism and power source are used to move the tubing in the up- and downward motion.

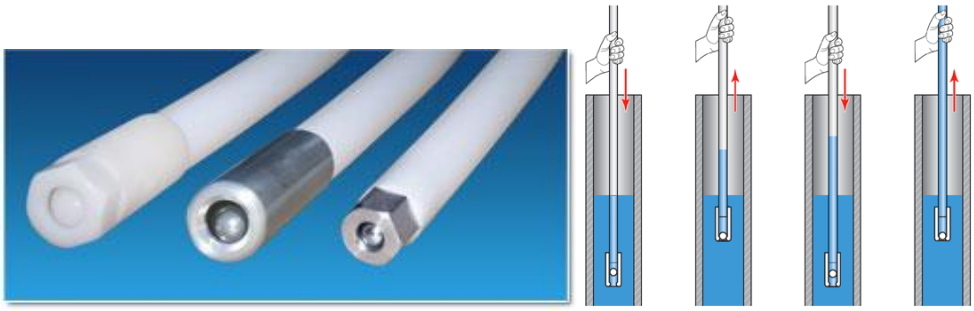

Figure 1 Footer Valve and Inertial Pumping Method

Development of a well using an inertial pump method is as follows:

1. Assemble the proper-sized tubing and footer valve.
2. Attach the footer valve by hand-threading the valve to the end of the tubing. The footer valve must be submerged at all times to operate. It is best to have the footer valve as deep as possible below static water level.
3. Lower the tubing (footer valve end first) into the well to the desired pumping depth within the well screen. Do not allow the bottom of the footer valve to sit or hit the bottom of the well during development—the continual downward motion may damage the bottom well cap. The tubing should be as straight and rigid as possible and centered in the well.
4. Securely anchor the drive mechanism (at the surface) to allow the drive mechanism arm to move the tubing up and down (instead of the tubing moving the drive mechanism up and down).
5. Attach and secure the tubing through the drive mechanism arm.
6. Extend the top of the tubing into the discharge container and secure.
7. Energize the power source for the drive mechanism.
8. Adjust the speed of the drive mechanism to allow for a continual discharge. The pumping motion should be constant (i.e., no stops or delays) and the strokes should be distinct and rapid.
9. The range of motion of the drive mechanism arm is generally 1 to 1.5 feet (< 0.5 meters). Areas of the saturated screen should be focused on individually during well development. The motion required to work the check valve should create a surging effect on the well screen, while simultaneously removing water from that portion of the screen.
10. Monitor water quality parameters during the purge event.
11. Continue to purge water until development criteria are met.
12. If the water levels draw down far enough, the check valve will not function. If the check valve does not operate due to lack of water, allow a minimum of 75 percent of the initial static water level to re-enter the well, if possible, before initiating well development.

1.2.3 Overpumping

Overpumping uses a submersible pump that purges water at a rate substantially higher than would be pumped during a water sampling event. The overpumping method is most effective on coarser-grained formations and is usually conducted in conjunction with mechanical surging.

A Whale pump **(Figure 2)** is often a preferred pump to use for during overpumping development methods, as they are inexpensive, can pump relatively large quantities of water at a quick rate, and can pump groundwater and larger sediments. Submersible pumps are often limited to design specifications for each brand or size of the pump in respect to the maximum depth to which they will operate and flow rate.

Figure 2 Whale Pump

Development of a well by use of a submersible pump is as follows:

1. Assemble a decontaminated pump that will fit into the well or water bore with the appropriately sized disposable tubing. Tubing options (polyethylene or Teflon) are dependent on the site-specific chemical compounds suspected in groundwater. It may be necessary to secure the tubing to the pump using an O-clamp. Tubing should be disposable or dedicated to each well location. If tubing is dedicated, secure the tubing in a manner to prevent the tubing from being "lost" in the well or water bore.
2. Lower the pump and tubing into water column until the pump is resting on the bottom of the well.
3. Extend the discharge portion of the tubing into a bucket or container. Secure.
4. Raise the pump off the bottom of the well or water bore.
5. Energize the pump.
6. The pumping rate should be set to provide a steady flow of water. Development should not be compromised to prevent drawdown. It is more important during well development to evacuate the well of larger volumes of water and sediment, than to minimize drawdown.
7. Areas of the saturated screen should be focused on individually during well development. Breaking the well screen into 3-foot (1 meter) sections, and allowing the pump to draw water from each section until sediment-free water is observed is an acceptable method. Within each section, the pump should be raised and lowered as to create a version of a surge block. The motion of the pump will create a surging effect on the well screen, while simultaneously removing water from that location.
8. Monitor water quality parameters during the purge event.
9. Continue to purge water until development criteria are met.
10. If the well or borehole is purged dry, water should be allowed to recover to a minimum of 75 percent of the initial static water level, if possible.

1.2.4 Surge Block (Surging Method)

A surge block should be used in conjunction with other techniques during well development. Using a "surge and purge" method for groundwater well development is often the most successful method of generating sediment-free purge water. The surging method forces water to flow in and out of the well screen by operating a surge block (**Figure 3**).

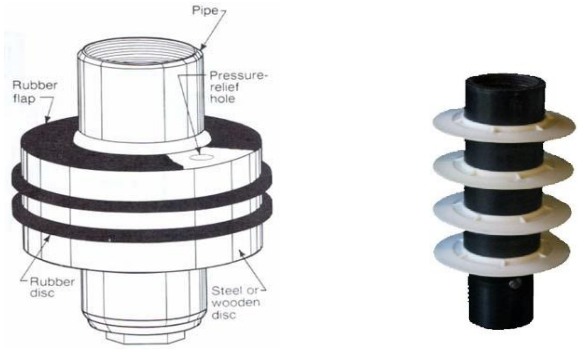

Figure 3 General Surge Block Components (Q Water Surge Block)

The use of a specifically constructed surge block is beneficial for the proper development of a well or water bore. The movement of a surge block creates turbulence and induces water flow back and forth across the well screen, dislodging and suspending fine materials in order to be removed from the well. A surge block is typically a round semi-flexible object slightly smaller in diameter than the well casing. The surge block is attached to a riser pipe. A simple surge block is made using pipe (or other semi-rigid rod) and a rubber stopper.

The surge block apparatus can become excessively heavy and cumbersome when operated by hand in deeper or larger wells. In these cases, a tripod, drill rig, or other mechanism may be required to assist in the raising and lowering of the surge block and associated riser pipe. Use of mechanical surging is should be considered for force as the force is dependent on the length of the stroke and the vertical velocity of the surge block.

To use a surge block:

1. Assemble the decontaminated surge block and riser pipe.
2. Lower the surge block to the top of the screen depth. Add additional riser pipe as the surge block is lowered.
3. Start the surging action gently above the well screen. The initial surging action should be relatively gentle, allowing any material blocking the screen to break up, go into suspension, and then move into the well.
4. Alternate surging with purging (via bailer, check valve, or pump). Remover the surge block and riser pipe for placement of the purging method.
5. Areas of the saturated screen should be focused on individually during well development. As water begins to move easily both in and out of the screen, lower the surge block in increments to a deeper level just above the screen. Care should be taken to ensure the surge block does not hit the bottom of the well or water bore or be positioned in a manner to damage the screen.
6. Gradually increase the surging action.
7. Surge each saturated length of screen a minimum of two surge cycles per length and five minutes each cycle. Additional surging cycles may be required based on water quality, turbidity, or field observations.
8. Continue to alternate the surging and purging method until the water is sediment-free or well development criteria are met.

2.0 RECORDS

Field notes will be kept in a bound field logbook or approved field documentation following the format specified in SOP-04 Field Documentation. The following information should be recorded when conducting well development:

- Well identification and location
- Date and time of well development
- Type of equipment and supplies
- Subcontractor information (Company name, driller name)
- Well construction details
- Air monitoring readings, if required
- Water level and total depth measurements (before and after well development)
- Water quality measurements
- Physical water observation
- Problems encountered
- Containment and volume of water removed
- Weather conditions
- Photographs.

ATTACHMENT A WELL DEVELOPMENT FORM

EHS Support
consider it done

WELL DEVELOPMENT FORM

Project Name: _____

Project Number: _____

Inner Casing Diameter: _____ in

Water Level (Initial): _____ ft bTOC

Product Level: _____ ft bTOC Product Thickness: _____ ft

Total Well Depth (Initial): _____ ft bTOC

Height of Water Column (L): _____ ft

Casing Volume (V): _____ gal

Calculated Volume to be Removed: _____ gal

Well Identifier: _____

Development Date: _____

Field Technician(s): _____

Purge Method: ☐ Pump ☐ Bailer ☐ Jet

☐ Other: _____

Pump / Bailer Type: _____

Surging Method: Well Surged? ☐ Yes ☐ No

Surge Equipment: _____

Start Purge Time: _____

Time	Volume Removed	Depth to Water	Temp	pH	Conductivity	Turbidity	Color	Odor	Comments
	gal	feet	°C / °F	S.U.	__S/cm	Visual/NTU			

Comments: _____

Formulas for Calculating Well Casing Volume	
Standard Inner Diameter Casing	Non-Standard Inner Diameter Casing
$V = L * H1$ V = Volume (gal) L = Height of water column (ft) H1 = Conversion factor (see below)	$V = \frac{\pi D^2 L}{4} * 7.48 \frac{gal}{ft^3}$ V = Volume (gals) D = Well diameter (*converted to ft)* L = Height of water column (ft)

Measure inner diameter (ID) of well
ID (in.), H1 = (gal/ft)
1 = 0.04
1.25 = 0.06
2 = 0.16
4 = 0.66
6 = 1.47
8 = 2.61

End Purge Time: _____

Final Water Level (ft): _____

Total Depth after Development (ft): _____

Well Purged Dry? ☐ Yes ☐ No

Total Volume Purged (gal): _____

Purge Water Containerized? ☐ Yes ☐ No

Disposal Location: _____

Disposal Date: _____

Signature: _____

LOW-FLOW GROUNDWATER SAMPLING

PURPOSE

The purpose of this SOP is to describe groundwater purging and collection procedures for groundwater samples from wells using low-flow purging and sampling techniques.

This procedure is based on the assumption that groundwater samples are able to be collected using low-flow (minimal drawdown) sampling techniques. Low-flow sampling techniques may not be practical or the best method for the collection of representative groundwater samples in all wells. In the event low-flow sampling techniques are insufficient for use, SOP 44: Groundwater Sampling Using a Volume Purge Technique will be followed to collected the groundwater sample.

Relevant EHS Support SOPs

- SOP-04 Field Documentation
- SOP-05 Sample Management and Shipping
- SOP-08 Field Equipment Operation and Calibration
- SOP-09 Equipment Decontamination
- SOP-41 Fluid Measurement
- SOP-46 Water Sampling for Chemical Analysis.

Attachments

- Attachment A EHS Support Low Flow Groundwater Sampling Form

Required Materials

- Air monitoring instrumentation (e.g., PID) and supplies
- Water quality meters for temperature, specific conductance, pH, DO, ORP, and turbidity
- Field logbook and field documentation
- Site plan showing well or water bore locations
- Health and Safety Plan (HASP)
- Indelible ink pens and waterproof marking pen
- Submersible pump, controller, and power source—generator or battery
- Teflon or polyethylene tubing
- Decontamination equipment and supplies
- Bucket, drums, or other large container for storing or transporting development water.
- Measuring equipment (tape, water level indicator)
- GPS
- Camera
- Appropriate sample containers, sampling kits, labels, coolers, ice, Chain of Custody forms, tape, plastic baggies
- Duct tape and wrapping tape.

1.0 LOW FLOW GROUNDWATER SAMPLING

Low-flow sampling purges stagnant water out of the well to allow sampling of formation water; however, it is intended to purge and sample only a limited interval of the well/formation. The term "low-flow" refers to the velocity at which water enters the pump or tubing intake from the surrounding formation in the immediate vicinity of the well screen. Purging at a low flow rate within the screened interval of a well should result in minimal drawdown of the water level, minimize the mixing of stagnant water in the well with formation water, and should result in a representative sample of the formation water. The low-flow technique described in this SOP complies with the guidelines provided by Puls and Barcelona (USEPA Low-Flow (Minimal Drawdown) Groundwater Sampling Procedures, 1996).

1.1 Low Flow Groundwater Sampling Considerations

Low-flow purging has advantages and disadvantages.

Advantages	Disadvantages
• Improved sample quality by minimizing the disturbance in the well • Less mixing of the stagnant casing water with the formation water • Samples are more representative of the mobile load of contaminants present in the aquifer reducing the need for filtering the water samples • Turbidity can be lower due to the slower discharge rate • The purging and sampling time is reduced • Less operator variability, greater operator control • Better sample consistency; reduced artificial sample variability • Purge quantity is smaller resulting in less wastewater.	• The necessity for more equipment such as variable speed pump with the capability to pump at low rates, a flow-through cell that includes pH, oxidation-reduction potential (ORP), dissolved oxygen (DO), temperature, specific conductance, and a turbidity probe and meter(s) • Higher initial costs • Additional cost and time can be incurred since stabilization of water parameters may require relatively longer times • Sample results may not be reproducible if the pump is placed at a different depth within the screened interval each time the well is sampled.
Low-flow purging is generally most effective • with short-screened intervals (e.g., < 20 feet, < 6 m).	Low-flow purging is generally not suitable for: • aquifers with very low hydraulic conductivities where minimal drawdown cannot be maintained • long screened intervals (e.g., > 9 m) or open-hole wells where the hydraulic flow pathways are unknown • use were the aquifer is contaminated by non-aqueous phase liquids.

Selecting equipment for purging and sampling a well requires site and project specific considerations to ensure that all collected samples meet the project objectives and data quality requirements. Groundwater chemistry can be altered by changes in temperature, pressure, and exposure to air that are brought on by the sampling process. Therefore, it is important to select sample equipment and follow sampling procedures that minimize changes.

Factors to consider when selecting sample equipment include: the analytes being evaluated, the type and location of well being sampled, physical characteristics of the well (diameter and total depth), depth to water, the amount of water to be purged, geology adjacent to the screened interval and the groundwater chemistry.

1.2 Equipment

1.2.1 Pumps

Pumps transport water from depth to the land surface by two methods, suction lift or positive pressure. The pumping mechanism for most suction-lift pumps (e.g. peristaltic and centrifugal pumps) is at land surface. Positive-displacement pumps (e.g. submersible and bladder) are placed below the static water level.

Control of the pumping rate is an important consideration when selecting dedicated or portable pumps. Sampling rates should be high enough to fill sample containers efficiently and with minimal exposure to the atmosphere, but low enough to minimize sample alteration by agitation or aeration. This is especially important for sensitive analytes, such as volatile organic compounds (VOCs) and trace metals. Other considerations in pump selection:

- Suction pumps, (e.g., peristaltic pumps) may be inappropriate for collecting VOCs, semi-VOCs (SVOCs), volatile petroleum compounds, and some (pH-dependent) metals. Suction lift pumps are not recommended for sampling VOCs because a vacuum is created at the intake to draw the sample to the land surface and can result in the loss of volatile organics or other dissolved gases. The lift capacity of the peristaltic pump is about 25 feet (8 to 10 meters) below ground surface.
- Positive-displacement pumps are generally preferred over suction-lift pumps.
- Dedicated pumps are preferable to portable pumps because portable pumps can create a disturbance in the water column during installation and require decontamination between wells.
- If a portable pump is selected for low-flow pumping, new or dedicated tubing must be used at each sampling location, and the pump must be lowered gently into the well to minimize disturbance to the water column.
- Depth to water effects positive-displacement pump operation. The pumping rate will typically decrease with increased depth to water.
- If a gasoline- or diesel-powered generator is used to energize the sampling pump, the power source must be located at least 10- to 20-feet (5 to 10 meters) downwind of the wellhead.
- Inertial pumps (e.g., Waterra) or bailers should never be used for low- flow sampling because they generate turbulence in the well and exacerbate degasing.

1.2.2 Tubing

Teflon or Teflon-lined polyethylene tubing is preferred when sampling VOCs, SVOCs, pesticides, polychlorinated biphenyls (PCBs), and inorganics. Polyvinyl chloride (PVC), polypropylene, or polyethylene tubing are to be used when collecting samples for metal and other inorganic analyses. Tubing used in low-flow purging effort generally range have an inside diameter ranging from 1/4 inch or 3/8 inch (4 to 8 mm).

Silastic tubing is recommended for the section of tubing around the rotor head of the peristaltic pump and should be less than a foot in length.

1.2.3 Other Equipment

A multi-parameter instrument, capable of measuring pH, specific conductance, temperature, ORP, DO, and turbidity, with a flow-through cell is preferred when measuring indicator field parameters. Field instruments will be calibrated in accordance with SOP-08 Field Equipment Calibration and Operation. Details about a multi-probe water quality meter is included as Attachment B in the SOP-08.

1.3 Low-Flow Sampling Precautions

The following precautions should be considered when collecting groundwater samples using low-flow sampling procedures.

- Interferences can result from using contaminated equipment, cleaning materials, or sample containers.
- Establish the order the wells will be sampled. Sample order is based on logistics or the known or suspected water quality of a sample location. For contaminated sites, wells should be sampled in order of increasing chemical concentrations (known or anticipated). This minimizes the possibility for cross contamination of the sample equipment.
- Uncontrolled ambient/surrounding air conditions (i.e., truck/vehicle exhaust) can also influence the samples.
- If groundwater is extremely turbid on initiation of purge, consider bypassing the flow-through cell until groundwater clears to a visually lower turbidity level. The length of time this may take can vary on how turbid the water is, the formation around the well screen, and the analysis required on the sample. If turbidity does not decrease, the well may need to be re-developed.
- The pump or tubing intake must be in an appropriate depth within the well screen and located at a depth specified in the work plan or QAPP. The sample depth should be consistent from sample event to sample event. Suggested intake depths might consider the following:
  - For wells with screens <10-feet (<5 m) in length, the intake should be placed approximately in the middle of the saturated portion of the screen.
  - For wells with well screens > 10 feet (>5 m), the primary flow zones and contaminant concentration intervals must be identified. Recommendations may include the middle of the saturated portion of the screen, or mid-screen.
  - For wells that have measureable non-aqueous phase liquid (NAPL), a determination if the well should be sampled should be discussed with the PM. Groundwater that has NAPL may interfere with laboratory analytical equipment and has a higher potential of cross contamination if a displacement-pressure pump is used. If low-flow sampling in a well that has NAPL is determined, the following is recommended:
    i. Chose a purge technique such as a peristaltic pump in which the tubing can be discarded after use. A displacement-pressure pump is not recommended.
    ii. The preferred procedure is to remove the light NAPL (LNAPL) from the top of the water column prior to purging the well. Removal is generally accomplished by using a bailer, pumping/skimming the LNAPL, or absorbent pads.
    iii. If the NAPL is LNAPL and the LNAPL is not removed, lower the tubing intake a minimum of 2 feet (0.5 m) below the LNAPL/water interface. Purge at a low discharge rate and monitor the interface depth, so the drawdown of the interface does not allow LNAPL into the tubing intake.
    iv. If the NAPL is dense NAPL (DNAPL), measure the depth to the DNAPL/water interface and place the tubing intake a minimum of 2 feet (0.5 m) above the depth of the interface. Purge at a low discharge rate and monitor the water level for drawdown. Avoid purge rates that would disturb the DNAPL and allow the DNAPL to enter the tubing intake.

1.4 Low-Flow Sampling Procedures

The low-flow process can vary based on project work plan and well-specific details, and procedures may need to be adjusted to accompany variations. In general, the low-flow sampling procedures are as follows:

1. Field equipment will be calibrated in accordance with the guidelines provided in SOP-08 Field Equipment Operation and Calibration or the manufacturer's manual.
2. Field equipment will be decontaminated in accordance with SOP-09 Field Decontamination or new disposable equipment will be used as appropriate.
3. Open the well. If required, use a photoionization detector or equivalent to measure for the presence of volatile organic compounds. Record the results of the photoionization detector measurement in field logbook or approved field documentation.
4. Measure the depth to water and total depth of the well using a water level indicator. If NAPL is present, use an interface probe for fluid measurements and total depth. Fluid levels or total depths will be measured in accordance with the guidelines provided in SOP-41 Fluid Measurements. Record the measurements in the field logbook or approved field documentation.
5. Lower the pump or tubing intake slowly to determined depth in the well screen. The determined depth should be outlined in the work plan or QAPP, or the midsection of the well screen or saturated water column of the well screen.
6. Once the pump or tubing intake is to depth, energize the pump. Set the pump controller to the desired pumping rate. Start the pump at a relatively low pumping rate--about 0.1 to 0.2 litres per minute (L/min).
7. Record the purge start time.
8. Water levels, pump discharge rates, and groundwater field parameters will be measured and recorded at consistent intervals (e.g., 2, to 5 minute intervals) during purging activities.
9. Groundwater discharge rates will be measured using a graduated cylinder or equivalent to ensure purge rates are discharging between 100 to 500 milliliters per minute (ml/min). Preferably, pumping rates will be maintained between 200 to 300 mL/min.
10. Use water level measurements to help establish the optimum pump rate. Water level drawdown provides the best indication of the stress imparted by a given flow-rate for a given hydrological situation. Water level measurements during the purge will be less than 0.33 feet from the initially measured groundwater depth. If drawdown is greater than 0.33 feet, lower the pumping rate and continue to monitor the water level. If drawdown continues, lower the pumping rate until water levels are consistent or rebound. If drawdown is greater than 0.33 feet but the water level depth remains at the same water level depth or rebounds, groundwater depths will be considered stabile or re-entering faster than being discharged. If water level continues to drawdown at the lowest achievable pumping rate, note on field logs.
11. During purging and sample collection the water flow should be a smooth, solid stream of water with no air or gas bubbles in the tubing or flow cell. Gradually adjust the pumping rate to eliminate bubbles, if present and able.
12. Observations of clarity, color, and odor of the purged water should be recorded at successive intervals.
13. Field indicator parameters will be recorded during purging for pH, temperature (°C or °F), specific conductance (µS/cm or mS/cm), ORP (mV), DO (mg/L), and turbidity (NTU). If other units of measurement are used, the unit of measurement will be documented in the field log book or approved field documents.
14. Turbidity will be monitored as turbidity may potentially interfere with some laboratory analyses, such as metals. Turbidity may be reduced in the sample by lowering the pumping rate.
15. Purging is considered complete when the water extraction rate and water level are consistent, and the indicators parameters have stabilized for 3 consecutive readings as outlined below:

Parameter	Stabilization Criteria
Temperature	± 3% of reading (minimum of ± 0.2 C)
pH	+/- 0.1
specific conductance	+/- 3%
ORP	+/- 10 millivolts
DO	+/- 0.3 milligrams per liter
Turbidity	No stabilization criteria, however, an NTU reading less than 10 NTU is preferred

16. If the field indicator parameters do not stabilize, a groundwater sample will be collected after removal of 1 well volume, or 1 hour, whichever occurs first. Calculation of a well volume is provided in SOP-44 Volume Purge Sampling.
17. If the well purges dry, the well should be sampled as soon as a sufficient volume of groundwater has re-entered the well.
18. Re-purging of the well will be performed if a well is inactive for more than 24 hours after full recharge.
19. Record the volume of water discharged during the purge event from the start time to the time of sample collection.
20. The pump should not be moved or turned off between purging and sampling. The pumping rate can be decreased for sample collection but should never be increased.
21. Prior to sampling, disconnect the tubing leading to the flow-through cell.
22. Groundwater samples will be collected in laboratory-supplied jars once purging is completed. Groundwater samples will be collected directly from the tubing (i.e., the sample will not be collected from the flow-through cell port) with the pump rate consistent with stabilization purging flow rates.
23. Groundwater samples will be collected in accordance with the work plan or QAPP and will follow the sampling guidelines provided in SOP-46 Water Sampling for Chemical Analysis.
24. Collected samples will be placed in insulated coolers containing ice to maintain a temperature of 4°C. Samples will be labeled, managed, and shipped in accordance SOP-05 Sample Management and Shipping.
25. Place the discharged water into a bucket or pump directly into an appropriate container. Dispose of the discharge water or wastes in accordance with SOP-07 Investigative Derived Waste.
26. Restore the location and secure the well and area to previous site conditions.

2.0 RECORDS

Field notes will be kept in a bound field logbook or approved field documentation following the format specified in SOP-04 Field Documentation. Specific documentation may include health and safety documentation, precipitation data, and photographs. Hardcopy discharge records, including all related quality control documentation, must be maintained in permanent project files. A Low-Flow Sample Sheet is contained as **Attachment A**. Documentation of the sampling event should include (at a minimum):

- Required site maps and HASP forms
- Instrument calibration
- Equipment calibration sheet from rental agency
- Well identification and location
- Type of equipment and supplies
- Well construction details
- Previous sample event or water level details
- Air monitoring readings, if required
- Low-Flow Sampling Form details
  - Physical water observation
  - Containment and volume of water removed
  - Name of the sample collectors
  - Water level depth and total depth
  - Pump or tubing intake depth in screen
  - Pumping rates, drawdown, indicator field parameters values, calculated or measured total volume pumped, and clock time of each set of measurements.
  - Times (start, finish, sample time)
  - Laboratory information (sample ID, preservative, QA/QC)
- Weather observations (e.g., temperature, wind speed and direction, cloud coverage).
- Any problems encountered or deviations from this SOP.
- Summary of daily activities and personnel onsite.

ATTACHMENT A LOW-FLOW GROUNDWATER SAMPLING FORM

EHS Support
consider it done

LOW FLOW GROUNDWATER SAMPLING FORM

Project Name: _____

Project Number: _____

Time (Initial): _____

Initial Water Level: _____ ft

Depth to Product: _____ ft

Total Well Depth: _____ ft

Well Identification: _____

Sample Date: _____

Field Technician(s): _____

Inner Casing Diameter (in): _____

Pump and Tubing Type: _____

Start Purge Time: _____

Time	Flow Rate	Water Level	Temp.	pH	Conductivity	Turbidity	DO	ORP	Odor	Color	Comments
	__L/min	ft	°C / °F	S.U.	__S/cm	NTU	mg/L	mV			

Comments: _____

End Purge Time: _____

Final Water Level: _____ ft

Total Volume Purged: _____ gal

One Well Volume (prior to purging, if applicable): _____ gal

Well Purged Dry? ☐ Yes ☐ No

Tubing Inlet Depth: _____

SAMPLE ID	TIME	ANALYSES	QA/QC SAMPLE	REMARKS

Gas Concentration in Well: _____ ppm

Formula for Calculating Well Casing Volume

$$[A] = \frac{\pi D^2 L}{4} * 7.48 \frac{gal}{ft^3}$$

D = Well casing inner diameter *(converted to feet)*
L = Height of water column (ft)

Parameter	Stabilization Criteria*
Temperature	± 3% of reading (minimum of ± 0.2 C)
pH	+/- 0.1
Specific Conductance	+/- 3%
ORP	+/- 10 millivolts
Dissolved Oxygen	+/- 0.3 milligrams per liter
Turbidity	Not a stabilization criteria; however, the lower the turbidity the better

* - USEPA, 1996 (Puls and Barcelona) Low-Flow (Minimal Drawdown) Ground-Water Sampling Procedures

Signature: _____

ATTACHMENT B LOW-FLOW (MINIMAL DRAWDOWN) GROUNDWATER SAMPLING FORM (PULS AND BARCELONA, 1996)

United States Environmental Protection Agency | Office of Research and Development | Office of Solid Waste and Emergency Response | EPA/540/S-95/504 April 1996

Ground Water Issue

LOW-FLOW (MINIMAL DRAWDOWN) GROUND-WATER SAMPLING PROCEDURES

by Robert W. Puls[1] and Michael J. Barcelona[2]

Background

The Regional Superfund Ground Water Forum is a group of ground-water scientists, representing EPA's Regional Superfund Offices, organized to exchange information related to ground-water remediation at Superfund sites. One of the major concerns of the Forum is the sampling of ground water to support site assessment and remedial performance monitoring objectives. This paper is intended to provide background information on the development of low-flow sampling procedures and its application under a variety of hydrogeologic settings. It is hoped that the paper will support the production of standard operating procedures for use by EPA Regional personnel and other environmental professionals engaged in ground-water sampling.

For further information contact: Robert Puls, 405-436-8543, Subsurface Remediation and Protection Division, NRMRL, Ada, Oklahoma.

I. Introduction

The methods and objectives of ground-water sampling to assess water quality have evolved over time. Initially the emphasis was on the assessment of water quality of aquifers as sources of drinking water. Large water-bearing units were identified and sampled in keeping with that objective. These were highly productive aquifers that supplied drinking water via private wells or through public water supply systems. Gradually, with the increasing awareness of subsurface pollution of these water resources, the understanding of complex hydrogeochemical processes which govern the fate and transport of contaminants in the subsurface increased. This increase in understanding was also due to advances in a number of scientific disciplines and improvements in tools used for site characterization and ground-water sampling. Ground-water quality investigations where pollution was detected initially borrowed ideas, methods, and materials for site characterization from the water supply field and water analysis from public health practices. This included the materials and manner in which monitoring wells were installed and the way in which water was brought to the surface, treated, preserved and analyzed. The prevailing conceptual ideas included convenient generalizations of ground-water resources in terms of large and relatively homogeneous hydrologic *units*. With time it became apparent that conventional water supply generalizations of *homogeneity* did not adequately represent field data regarding pollution of these subsurface resources. The important role of *heterogeneity* became increasingly clear not only in geologic terms, but also in terms of complex physical,

[1]National Risk Management Research Laboratory, U.S. EPA
[2]University of Michigan

Superfund Technology Support Center for Ground Water

National Risk Management Research Laboratory
Subsurface Protection and Remediation Division
Robert S. Kerr Environmental Research Center
Ada, Oklahoma

Technology Innovation Office
Office of Solid Waste and Emergency Response, US EPA, Washington, DC

Walter W. Kovalick, Jr., Ph.D.
Director

chemical and biological subsurface processes. With greater appreciation of the role of heterogeneity, it became evident that subsurface pollution was ubiquitous and encompassed the unsaturated zone to the deep subsurface and included unconsolidated sediments, fractured rock, and *aquitards* or low-yielding or impermeable formations. Small-scale processes and heterogeneities were shown to be important in identifying contaminant distributions and in controlling water and contaminant flow paths.

It is beyond the scope of this paper to summarize all the advances in the field of ground-water quality investigations and remediation, but two particular issues have bearing on ground-water sampling today: aquifer heterogeneity and colloidal transport. Aquifer heterogeneities affect contaminant flow paths and include variations in geology, geochemistry, hydrology and microbiology. As methods and the tools available for subsurface investigations have become increasingly sophisticated and understanding of the subsurface environment has advanced, there is an awareness that in most cases a primary concern for site investigations is characterization of contaminant flow paths rather than entire aquifers. In fact, in many cases, plume thickness can be less than well screen lengths (e.g., 3-6 m) typically installed at hazardous waste sites to detect and monitor plume movement over time. Small-scale differences have increasingly been shown to be important and there is a general trend toward smaller diameter wells and shorter screens.

The hydrogeochemical significance of colloidal-size particles in subsurface systems has been realized during the past several years (Gschwend and Reynolds, 1987; McCarthy and Zachara, 1989; Puls, 1990; Ryan and Gschwend, 1990). This realization resulted from both field and laboratory studies that showed faster contaminant migration over greater distances and at higher concentrations than flow and transport model predictions would suggest (Buddemeier and Hunt, 1988; Enfield and Bengtsson, 1988; Penrose et al., 1990). Such models typically account for interaction between the mobile aqueous and immobile solid phases, but do not allow for a mobile, reactive solid phase. It is recognition of this third *phase* as a possible means of contaminant transport that has brought increasing attention to the manner in which samples are collected and processed for analysis (Puls et al., 1990; McCarthy and Degueldre, 1993; Backhus et al., 1993; U. S. EPA, 1995). If such a phase is present in sufficient mass, possesses high sorption reactivity, large surface area, and remains stable in suspension, it can serve as an important mechanism to facilitate contaminant transport in many types of subsurface systems.

Colloids are particles that are sufficiently small so that the surface free energy of the particle dominates the bulk free energy. Typically, in ground water, this includes particles with diameters between 1 and 1000 nm. The most commonly observed mobile particles include: secondary clay minerals; hydrous iron, aluminum, and manganese oxides; dissolved and particulate organic materials, and viruses and bacteria. These reactive particles have been shown to be mobile under a variety of conditions in both field studies and laboratory column experiments, and as such need to be included in monitoring programs where identification of the *total* mobile contaminant loading (dissolved + naturally suspended particles) at a site is an objective. To that end, sampling methodologies must be used which do not artificially bias *naturally* suspended particle concentrations.

Currently the most common ground-water purging and sampling methodology is to purge a well using bailers or high speed pumps to remove 3 to 5 casing volumes followed by sample collection. This method can cause adverse impacts on sample quality through collection of samples with high levels of turbidity. This results in the inclusion of otherwise immobile artifactual particles which produce an overestimation of certain analytes of interest (e.g., metals or hydrophobic organic compounds). Numerous documented problems associated with filtration (Danielsson, 1982; Laxen and Chandler, 1982; Horowitz et al., 1992) make this an undesirable method of rectifying the turbidity problem, and include the removal of potentially mobile (contaminant-associated) particles during filtration, thus artificially biasing contaminant concentrations low. Sampling-induced turbidity problems can often be mitigated by using low-flow purging and sampling techniques.

Current subsurface conceptual models have undergone considerable refinement due to the recent development and increased use of field screening tools. So-called hydraulic *push* technologies (e.g., cone penetrometer, Geoprobe®, QED HydroPunch®) enable relatively fast screening site characterization which can then be used to design and install a monitoring well network. Indeed, alternatives to conventional monitoring wells are now being considered for some hydrogeologic settings. The ultimate design of any monitoring system should however be based upon adequate site characterization and be consistent with established monitoring objectives.

If the sampling program objectives include accurate assessment of the magnitude and extent of subsurface contamination over time and/or accurate assessment of subsequent remedial performance, then some information regarding plume delineation in three-dimensional space is necessary prior to monitoring well network design and installation. This can be accomplished with a variety of different tools and equipment ranging from hand-operated augers to screening tools mentioned above and large drilling rigs. Detailed information on ground-water flow velocity, direction, and horizontal and vertical variability are essential baseline data requirements. Detailed soil and geologic data are required prior to and during the installation of sampling points. This includes historical as well as detailed soil and geologic logs which accumulate during the site investigation. The use of borehole geophysical techniques is also recommended. With this information (together with other site characterization data) and a clear understanding of sampling

objectives, then appropriate location, screen length, well diameter, slot size, etc. for the monitoring well network can be decided. This is especially critical for new in situ remedial approaches or natural attenuation assessments at hazardous waste sites.

In general, the overall goal of any ground-water sampling program is to collect water samples with no alteration in water chemistry; analytical data thus obtained may be used for a variety of specific monitoring programs depending on the regulatory requirements. The sampling methodology described in this paper assumes that the monitoring goal is to sample monitoring wells for the presence of contaminants and it is applicable whether mobile colloids are a concern or not and whether the analytes of concern are metals (and metalloids) or organic compounds.

II. Monitoring Objectives and Design Considerations

The following issues are important to consider prior to the design and implementation of any ground-water monitoring program, including those which anticipate using low-flow purging and sampling procedures.

A. Data Quality Objectives (DQOs)

Monitoring objectives include four main types: detection, assessment, corrective-action evaluation and resource evaluation, along with *hybrid* variations such as site-assessments for property transfers and water availability investigations. Monitoring objectives may change as contamination or water quality problems are discovered. However, there are a number of common components of monitoring programs which should be recognized as important regardless of initial objectives. These components include:

1) Development of a conceptual model that incorporates elements of the regional geology to the local geologic framework. The conceptual model development also includes initial site characterization efforts to identify hydrostratigraphic units and likely flow-paths using a minimum number of borings and well completions;

2) Cost-effective and well documented collection of high quality data utilizing simple, accurate, and reproducible techniques; and

3) Refinement of the conceptual model based on supplementary data collection and analysis.

These fundamental components serve many types of monitoring programs and provide a basis for future efforts that evolve in complexity and level of spatial detail as purposes and objectives expand. High quality, reproducible data collection is a common goal regardless of program objectives.

High quality data collection implies data of sufficient accuracy, precision, and completeness (i.e., ratio of valid analytical results to the minimum sample number called for by the program design) to meet the program objectives. Accuracy depends on the correct choice of monitoring tools and procedures to minimize sample and subsurface disturbance from collection to analysis. Precision depends on the repeatability of sampling and analytical protocols. It can be assured or improved by replication of sample analyses including blanks, field/lab standards and reference standards.

B. Sample Representativeness

An important goal of any monitoring program is collection of data that is truly representative of conditions at the site. The term *representativeness* applies to chemical and hydrogeologic data collected via wells, borings, piezometers, geophysical and soil gas measurements, lysimeters, and temporary sampling points. It involves a recognition of the statistical variability of individual subsurface physical properties, and contaminant or major ion concentration levels, while explaining extreme values. Subsurface temporal and spatial variability are facts. Good professional practice seeks to maximize representativeness by using proven accurate and reproducible techniques to define limits on the distribution of measurements collected at a site. However, measures of representativeness are dynamic and are controlled by evolving site characterization and monitoring objectives. An evolutionary site characterization model, as shown in Figure 1, provides a systematic approach to the goal of consistent data collection.

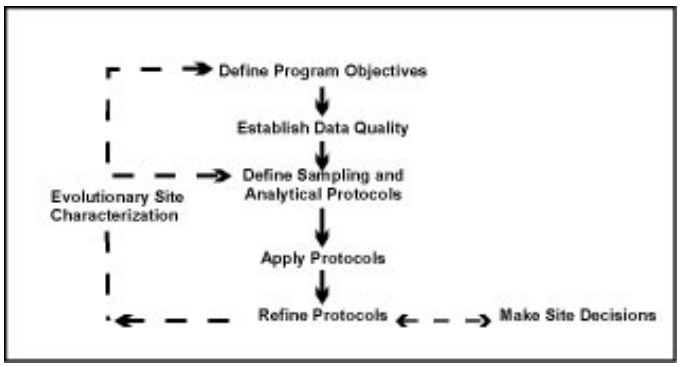

Figure 1. Evolutionary Site Characterization Model

The model emphasizes a recognition of the causes of the variability (e.g., use of inappropriate technology such as using bailers to purge wells; imprecise or operator-dependent methods) and the need to control avoidable errors.

1) Questions of Scale

A sampling plan designed to collect representative samples must take into account the potential scale of changes in site conditions through space and time as well as the chemical associations and behavior of the parameters that are targeted for investigation. In subsurface systems, physical (i.e., aquifer) and chemical properties over time or space are not statistically independent. In fact, samples taken in close proximity (i.e., within distances of a few meters) or within short time periods (i.e., more frequently than monthly) are highly auto-correlated. This means that designs employing high-sampling frequency (e.g., monthly) or dense spatial monitoring designs run the risk of redundant data collection and misleading inferences regarding trends in values that aren't statistically valid. In practice, contaminant detection and assessment monitoring programs rarely suffer these *over-sampling* concerns. In corrective-action evaluation programs, it is also possible that too little data may be collected over space or time. In these cases, false interpretation of the spatial extent of contamination or underestimation of temporal concentration variability may result.

2) Target Parameters

Parameter selection in monitoring program design is most often dictated by the regulatory status of the site. However, background water quality constituents, purging indicator parameters, and contaminants, all represent targets for data collection programs. The tools and procedures used in these programs should be equally rigorous and applicable to all categories of data, since all may be needed to determine or support regulatory action.

C. Sampling Point Design and Construction

Detailed site characterization is central to all decision-making purposes and the basis for this characterization resides in identification of the geologic framework and major hydro-stratigraphic units. Fundamental data for sample point location include: subsurface lithology, head-differences and background geochemical conditions. Each sampling point has a proper use or uses which should be documented at a level which is appropriate for the program's data quality objectives. Individual sampling points may not always be able to fulfill multiple monitoring objectives (e.g., detection, assessment, corrective action).

1) Compatibility with Monitoring Program and Data Quality Objectives

Specifics of sampling point location and design will be dictated by the complexity of subsurface lithology and variability in contaminant and/or geochemical conditions. It should be noted that, regardless of the ground-water sampling approach, few sampling points (e.g., wells, drive-points, screened augers) have zones of influence in excess of a few feet. Therefore, the spatial frequency of sampling points should be carefully selected and designed.

2) Flexibility of Sampling Point Design

In most cases *well-point* diameters in excess of 1 7/8 inches will permit the use of most types of submersible pumping devices for low-flow (minimal drawdown) sampling. It is suggested that *short* (e.g., less than 1.6 m) screens be incorporated into the monitoring design where possible so that comparable results from one device to another might be expected. *Short*, of course, is relative to the degree of vertical water quality variability expected at a site.

3) Equilibration of Sampling Point

Time should be allowed for equilibration of the well or sampling point with the formation after installation. Placement of well or sampling points in the subsurface produces some disturbance of ambient conditions. Drilling techniques (e.g., auger, rotary, etc.) are generally considered to cause more disturbance than *direct-push* technologies. In either case, there may be a period (i.e., days to months) during which water quality near the point may be distinctly different from that in the formation. Proper development of the sampling point and adjacent formation to remove fines created during emplacement will shorten this water quality *recovery* period.

III. Definition of Low-Flow Purging and Sampling

It is generally accepted that water in the well casing is non-representative of the formation water and needs to be purged prior to collection of ground-water samples. However, the water in the screened interval may indeed be representative of the formation, depending upon well construction and site hydrogeology. Wells are purged to some extent for the following reasons: the presence of the air interface at the top of the water column resulting in an oxygen concentration gradient with depth, loss of volatiles up the water column, leaching from or sorption to the casing or filter pack, chemical changes due to clay seals or backfill, and surface infiltration.

Low-flow purging, whether using portable or dedicated systems, should be done using pump-intake located in the middle or slightly above the middle of the screened interval. Placement of the pump too close to the bottom of the well will cause increased entrainment of solids which have collected in the well over time. These particles are present as a result of well development, prior purging and sampling events, and natural colloidal transport and deposition. Therefore, placement of the pump in the middle or toward the top of the screened interval is suggested. Placement of the pump at the top of the water column for sampling is only recommended in unconfined aquifers, screened across the water table, where this is the desired sampling point. Low-

flow purging has the advantage of minimizing mixing between the overlying stagnant casing water and water within the screened interval.

A. Low-Flow Purging and Sampling

Low-flow refers to the velocity with which water enters the pump intake and that is imparted to the formation pore water in the immediate vicinity of the well screen. It does not necessarily refer to the flow rate of water discharged at the surface which can be affected by flow regulators or restrictions. Water level drawdown provides the best indication of the stress imparted by a given flow-rate for a given hydrological situation. The objective is to pump in a manner that minimizes stress (drawdown) to the system to the extent practical taking into account established site sampling objectives. Typically, flow rates on the order of 0.1 - 0.5 L/min are used, however this is dependent on site-specific hydrogeology. Some extremely coarse-textured formations have been successfully sampled in this manner at flow rates to 1 L/min. The effectiveness of using low-flow purging is intimately linked with proper screen location, screen length, and well construction and development techniques. The reestablishment of natural flow paths in both the vertical and horizontal directions is important for correct interpretation of the data. For high resolution sampling needs, screens less than 1 m should be used. Most of the need for purging has been found to be due to passing the sampling device through the overlying casing water which causes mixing of these stagnant waters and the dynamic waters within the screened interval. Additionally, there is disturbance to suspended sediment collected in the bottom of the casing and the displacement of water out into the formation immediately adjacent to the well screen. These disturbances and impacts can be avoided using dedicated sampling equipment, which precludes the need to insert the sampling device prior to purging and sampling.

Isolation of the screened interval water from the overlying stagnant casing water may be accomplished using low-flow minimal drawdown techniques. If the pump intake is located within the screened interval, most of the water pumped will be drawn in directly from the formation with little mixing of casing water or disturbance to the sampling zone. However, if the wells are not constructed and developed properly, zones other than those intended may be sampled. At some sites where geologic heterogeneities are sufficiently different within the screened interval, higher conductivity zones may be preferentially sampled. This is another reason to use shorter screened intervals, especially where high spatial resolution is a sampling objective.

B. Water Quality Indicator Parameters

It is recommended that water quality indicator parameters be used to determine purging needs prior to sample collection in each well. Stabilization of parameters such as pH, specific conductance, dissolved oxygen, oxidation-reduction potential, temperature and turbidity should be used to determine when formation water is accessed during purging. In general, the order of stabilization is pH, temperature, and specific conductance, followed by oxidation-reduction potential, dissolved oxygen and turbidity. Temperature and pH, while commonly used as purging indicators, are actually quite insensitive in distinguishing between formation water and stagnant casing water; nevertheless, these are important parameters for data interpretation purposes and should also be measured. Performance criteria for determination of stabilization should be based on water-level drawdown, pumping rate and equipment specifications for measuring indicator parameters. Instruments are available which utilize in-line flow cells to continuously measure the above parameters.

It is important to establish specific well stabilization criteria and then consistently follow the same methods thereafter, particularly with respect to drawdown, flow rate and sampling device. Generally, the time or purge volume required for parameter stabilization is independent of well depth or well volumes. Dependent variables are well diameter, sampling device, hydrogeochemistry, pump flow rate, and whether the devices are used in a portable or dedicated manner. If the sampling device is already in place (i.e., dedicated sampling systems), then the time and purge volume needed for stabilization is much shorter. Other advantages of dedicated equipment include less purge water for waste disposal, much less decontamination of equipment, less time spent in preparation of sampling as well as time in the field, and more consistency in the sampling approach which probably will translate into less variability in sampling results. The use of dedicated equipment is strongly recommended at wells which will undergo routine sampling over time.

If parameter stabilization criteria are too stringent, then minor oscillations in indicator parameters may cause purging operations to become unnecessarily protracted. It should also be noted that turbidity is a very conservative parameter in terms of stabilization. Turbidity is always the last parameter to stabilize. Excessive purge times are invariably related to the establishment of too stringent turbidity stabilization criteria. It should be noted that natural turbidity levels in ground water may exceed 10 nephelometric turbidity units (NTU).

C. Advantages and Disadvantages of Low-Flow (Minimum Drawdown) Purging

In general, the advantages of low-flow purging include:

- samples which are representative of the *mobile* load of contaminants present (dissolved and colloid-associated);
- minimal disturbance of the sampling point thereby minimizing sampling artifacts;
- less operator variability, greater operator control;

- reduced stress on the formation (minimal drawdown);
- less mixing of stagnant casing water with formation water;
- reduced need for filtration and, therefore, less time required for sampling;
- smaller purging volume which decreases waste disposal costs and sampling time;
- better sample consistency; reduced artificial sample variability.

Some disadvantages of low-flow purging are:

- higher initial capital costs,
- greater set-up time in the field,
- need to transport additional equipment to and from the site,
- increased training needs,
- resistance to change on the part of sampling practitioners,
- concern that new data will indicate a *change in conditions* and trigger an *action*.

IV. Low-Flow (Minimal Drawdown) Sampling Protocols

The following ground-water sampling procedure has evolved over many years of experience in ground-water sampling for organic and inorganic compound determinations and as such summarizes the authors' (and others) experiences to date (Barcelona et al., 1984, 1994; Barcelona and Helfrich, 1986; Puls and Barcelona, 1989; Puls et. al. 1990, 1992; Puls and Powell, 1992; Puls and Paul, 1995). High-quality chemical data collection is essential in ground-water monitoring and site characterization. The primary limitations to the collection of *representative* ground-water samples include: mixing of the stagnant casing and *fresh* screen waters during insertion of the sampling device or ground-water level measurement device; disturbance and resuspension of settled solids at the bottom of the well when using high pumping rates or raising and lowering a pump or bailer; introduction of atmospheric gases or degassing from the water during sample handling and transfer, or inappropriate use of vacuum sampling device, etc.

A. Sampling Recommendations

Water samples should not be taken immediately following well development. Sufficient time should be allowed for the ground-water flow regime in the vicinity of the monitoring well to stabilize and to approach chemical equilibrium with the well construction materials. This lag time will depend on site conditions and methods of installation but often exceeds one week.

Well purging is nearly always necessary to obtain samples of water flowing through the geologic formations in the screened interval. Rather than using a general but arbitrary guideline of purging three casing volumes prior to sampling, it is recommended that an in-line water quality measurement device (e.g., flow-through cell) be used to establish the stabilization time for several parameters (e.g. , pH, specific conductance, redox, dissolved oxygen, turbidity) on a well-specific basis. Data on pumping rate, drawdown, and volume required for parameter stabilization can be used as a guide for conducting subsequent sampling activities.

The following are recommendations to be considered before, during and after sampling:

- use low-flow rates (<0.5 L/min), during both purging and sampling to maintain minimal drawdown in the well;
- maximize tubing wall thickness, minimize tubing length;
- place the sampling device intake at the desired sampling point;
- minimize disturbances of the stagnant water column above the screened interval during water level measurement and sampling device insertion;
- make proper adjustments to stabilize the flow rate as soon as possible;
- monitor water quality indicators during purging;
- collect unfiltered samples to estimate contaminant loading and transport potential in the subsurface system.

B. Equipment Calibration

Prior to sampling, all sampling device and monitoring equipment should be calibrated according to manufacturer's recommendations and the site Quality Assurance Project Plan (QAPP) and Field Sampling Plan (FSP). Calibration of pH should be performed with at least two buffers which bracket the expected range. Dissolved oxygen calibration must be corrected for local barometric pressure readings and elevation.

C. Water Level Measurement and Monitoring

It is recommended that a device be used which will least disturb the water surface in the casing. Well depth should be obtained from the well logs. Measuring to the bottom of the well casing will only cause resuspension of settled solids from the formation and require longer purging times for turbidity equilibration. Measure well depth after sampling is completed. The water level measurement should be taken from a permanent reference point which is surveyed relative to ground elevation.

D. Pump Type

The use of low-flow (e.g., 0.1-0.5 L/min) pumps is suggested for purging and sampling all types of analytes. All pumps have some limitation and these should be investigated with respect to application at a particular site. Bailers are inappropriate devices for low-flow sampling.

1) General Considerations

There are no unusual requirements for ground-water sampling devices when using low-flow, minimal drawdown techniques. The major concern is that the device give consistent results and minimal disturbance of the sample across a range of *low* flow rates (i.e., < 0.5 L/min). Clearly, pumping rates that cause minimal to no drawdown in one well could easily cause *significant* drawdown in another well finished in a less transmissive formation. In this sense, the pump should not cause undue pressure or temperature changes or physical disturbance on the water sample over a reasonable sampling range. Consistency in operation is critical to meet accuracy and precision goals.

2) Advantages and Disadvantages of Sampling Devices

A variety of sampling devices are available for low-flow (minimal drawdown) purging and sampling and include peristaltic pumps, bladder pumps, electrical submersible pumps, and gas-driven pumps. Devices which lend themselves to both dedication and consistent operation at definable low-flow rates are preferred. It is desirable that the pump be easily adjustable and operate reliably at these lower flow rates. The peristaltic pump is limited to shallow applications and can cause degassing resulting in alteration of pH, alkalinity, and some volatiles loss. Gas-driven pumps should be of a type that does not allow the gas to be in direct contact with the sampled fluid.

Clearly, bailers and other *grab* type samplers are ill-suited for low-flow sampling since they will cause repeated disturbance and mixing of *stagnant* water in the casing and the *dynamic* water in the screened interval. Similarly, the use of inertial lift foot-valve type samplers may cause too much disturbance at the point of sampling. Use of these devices also tends to introduce uncontrolled and unacceptable operator variability.

Summaries of advantages and disadvantages of various sampling devices are listed in Herzog et al. (1991), U. S. EPA (1992), Parker (1994) and Thurnblad (1994).

E. Pump Installation

Dedicated sampling devices (left in the well) capable of pumping and sampling are preferred over <u>any</u> other type of device. Any portable sampling device should be slowly and carefully lowered to the middle of the screened interval or slightly above the middle (e.g., 1-1.5 m below the top of a 3 m screen). This is to minimize excessive mixing of the stagnant water in the casing above the screen with the screened interval zone water, and to minimize resuspension of solids which will have collected at the bottom of the well. These two disturbance effects have been shown to directly affect the time required for purging. There also appears to be a direct correlation between size of portable sampling devices relative to the well bore and resulting purge volumes and times. The key is to minimize disturbance of water and solids in the well casing.

F. Filtration

Decisions to filter samples should be dictated by sampling objectives rather than as a *fix* for poor sampling practices, and field-filtering of certain constituents should not be the default. Consideration should be given as to what the application of field-filtration is trying to accomplish. For assessment of truly dissolved (as opposed to operationally *dissolved* [i.e., samples filtered with 0.45 µm filters]) concentrations of major ions and trace metals, 0.1 µm filters are recommended although 0.45 µm filters are normally used for most regulatory programs. Alkalinity samples must also be filtered if significant particulate calcium carbonate is suspected, since this material is likely to impact alkalinity titration results (although filtration itself may alter the CO_2 composition of the sample and, therefore, affect the results).

Although filtration may be appropriate, filtration of a sample may cause a number of unintended changes to occur (e.g. oxidation, aeration) possibly leading to filtration-induced artifacts during sample analysis and uncertainty in the results. Some of these unintended changes may be unavoidable but the factors leading to them must be recognized. Deleterious effects can be minimized by consistent application of certain filtration guidelines. Guidelines should address selection of filter type, media, pore size, etc. in order to identify and minimize potential sources of uncertainty when filtering samples.

In-line filtration is recommended because it provides better consistency through less sample handling, and minimizes sample exposure to the atmosphere. In-line filters are available in both disposable (barrel filters) and non-disposable (in-line filter holder, flat membrane filters) formats and various filter pore sizes (0.1-5.0 µm). Disposable filter cartridges have the advantage of greater sediment handling capacity when compared to traditional membrane filters. Filters must be pre-rinsed following manufacturer's recommendations. If there are no recommendations for rinsing, pass through a minimum of 1 L of ground water following purging and prior to sampling. Once filtration has begun, a filter cake may develop as particles larger than the pore size accumulate on the filter membrane. The result is that the effective pore diameter of the membrane is reduced and particles smaller than the stated pore size are excluded from the filtrate. Possible corrective measures include prefiltering (with larger pore size filters), minimizing particle loads to begin with, and reducing sample volume.

G. Monitoring of Water Level and Water Quality Indicator Parameters

Check water level periodically to monitor drawdown in the well as a guide to flow rate adjustment. The goal is minimal drawdown (<0.1 m) during purging. This goal may be difficult to achieve under some circumstances due to geologic heterogeneities within the screened interval, and may require adjustment based on site-specific conditions and personal experience. In-line water quality indicator parameters should be continuously monitored during purging. The water quality

indicator parameters monitored can include pH, redox potential, conductivity, dissolved oxygen (DO) and turbidity. The last three parameters are often most sensitive. Pumping rate, drawdown, and the time or volume required to obtain stabilization of parameter readings can be used as a future guide to purge the well. Measurements should be taken every three to five minutes if the above suggested rates are used. Stabilization is achieved after all parameters have stabilized for three successive readings. In lieu of measuring all five parameters, a minimum subset would include pH, conductivity, and turbidity or DO. Three successive readings should be within ± 0.1 for pH, ± 3% for conductivity, ± 10 mv for redox potential, and ± 10% for turbidity and DO. Stabilized purge indicator parameter trends are generally obvious and follow either an exponential or asymptotic change to stable values during purging. Dissolved oxygen and turbidity usually require the longest time for stabilization. The above stabilization guidelines are provided for rough estimates based on experience.

H. Sampling, Sample Containers, Preservation and Decontamination

Upon parameter stabilization, sampling can be initiated. If an in-line device is used to monitor water quality parameters, it should be disconnected or bypassed during sample collection. Sampling flow rate may remain at established purge rate or may be adjusted slightly to minimize aeration, bubble formation, turbulent filling of sample bottles, or loss of volatiles due to extended residence time in tubing. Typically, flow rates less than 0.5 L/min are appropriate. The same device should be used for sampling as was used for purging. Sampling should occur in a progression from least to most contaminated well, if this is known. Generally, volatile (e.g., solvents and fuel constituents) and gas sensitive (e.g., Fe^{2+}, CH_4, H_2S/HS^-, alkalinity) parameters should be sampled first. The sequence in which samples for most inorganic parameters are collected is immaterial unless filtered (dissolved) samples are desired. Filtering should be done last and in-line filters should be used as discussed above. During both well purging and sampling, proper protective clothing and equipment must be used based upon the type and level of contaminants present.

The appropriate sample container will be prepared in advance of actual sample collection for the analytes of interest and include sample preservative where necessary. Water samples should be collected directly into this container from the pump tubing.

Immediately after a sample bottle has been filled, it must be preserved as specified in the site (QAPP). Sample preservation requirements are based on the analyses being performed (use site QAPP, FSP, RCRA guidance document [U. S. EPA, 1992] or EPA SW-846 [U. S. EPA, 1982]). It may be advisable to add preservatives to sample bottles in a controlled setting prior to entering the field in order to reduce the chances of improperly preserving sample bottles or introducing field contaminants into a sample bottle while adding the preservatives.

The preservatives should be transferred from the chemical bottle to the sample container using a disposable polyethylene pipet and the disposable pipet should be used only once and then discarded.

After a sample container has been filled with ground water, a Teflon™ (or tin)-lined cap is screwed on tightly to prevent the container from leaking. A sample label is filled out as specified in the FSP. The samples should be stored inverted at 4°C.

Specific decontamination protocols for sampling devices are dependent to some extent on the type of device used and the type of contaminants encountered. Refer to the site QAPP and FSP for specific requirements.

I. Blanks

The following blanks should be collected:

(1) field blank: one field blank should be collected from each source water (distilled/deionized water) used for sampling equipment decontamination or for assisting well development procedures.

(2) equipment blank: one equipment blank should be taken prior to the commencement of field work, from each set of sampling equipment to be used for that day. Refer to site QAPP or FSP for specific requirements.

(3) trip blank: a trip blank is required to accompany each volatile sample shipment. These blanks are prepared in the laboratory by filling a 40-mL volatile organic analysis (VOA) bottle with distilled/deionized water.

V. Low-Permeability Formations and Fractured Rock

The overall sampling program goals or sampling objectives will drive how the sampling points are located, installed, and choice of sampling device. Likewise, site-specific hydrogeologic factors will affect these decisions. Sites with very low permeability formations or fractures causing discrete flow channels may require a unique monitoring approach. Unlike water supply wells, wells installed for ground-water quality assessment and restoration programs are often installed in low water-yielding settings (e.g., clays, silts). Alternative types of sampling points and sampling methods are often needed in these types of environments, because low-permeability settings may require extremely low-flow purging (<0.1 L/min) and may be technology-limited. Where devices are not readily available to pump at such low flow rates, the primary consideration is to avoid dewatering of

the well screen. This may require repeated recovery of the water during purging while leaving the pump in place within the well screen.

Use of low-flow techniques may be impractical in these settings, depending upon the water recharge rates. The sampler and the end-user of data collected from such wells need to understand the limitations of the data collected; i.e., a strong potential for underestimation of actual contaminant concentrations for volatile organics, potential false negatives for filtered metals and potential false positives for unfiltered metals. It is suggested that comparisons be made between samples recovered using low-flow purging techniques and samples recovered using passive sampling techniques (i.e., two sets of samples). Passive sample collection would essentially entail acquisition of the sample with no or very little purging using a dedicated sampling system installed within the screened interval or a passive sample collection device.

A. Low-Permeability Formations (<0.1 L/min recharge)

1. Low-Flow Purging and Sampling with Pumps

a. "portable or non-dedicated mode" - Lower the pump (one capable of pumping at <0.1 L/min) to mid-screen or slightly above and set in place for minimum of 48 hours (to lessen purge volume requirements). After 48 hours, use procedures listed in Part IV above regarding monitoring water quality parameters for stabilization, etc., but do not dewater the screen. If excessive drawdown and slow recovery is a problem, then alternate approaches such as those listed below may be better.

b. "dedicated mode" - Set the pump as above at least a week prior to sampling; that is, operate in a dedicated pump mode. With this approach significant reductions in purge volume should be realized. Water quality parameters should stabilize quite rapidly due to less disturbance of the sampling zone.

2. Passive Sample Collection

Passive sampling collection requires insertion of the device into the screened interval for a sufficient time period to allow flow and sample equilibration before extraction for analysis. Conceptually, the extraction of water from low yielding formations seems more akin to the collection of water from the unsaturated zone and passive sampling techniques may be more appropriate in terms of obtaining "representative" samples. Satisfying usual sample volume requirements is typically a problem with this approach and some latitude will be needed on the part of regulatory entities to achieve sampling objectives.

B. Fractured Rock

In fractured rock formations, a low-flow to zero purging approach using pumps in conjunction with packers to isolate the sampling zone in the borehole is suggested. Passive multi-layer sampling devices may also provide the most "representative" samples. It is imperative in these settings to identify flow paths or water-producing fractures prior to sampling using tools such as borehole flowmeters and/or other geophysical tools.

After identification of water-bearing fractures, install packer(s) and pump assembly for sample collection using low-flow sampling in "dedicated mode" or use a passive sampling device which can isolate the identified water-bearing fractures.

VI. Documentation

The usual practices for documenting the sampling event should be used for low-flow purging and sampling techniques. This should include, at a minimum: information on the conduct of purging operations (flow-rate, drawdown, water-quality parameter values, volumes extracted and times for measurements), field instrument calibration data, water sampling forms and chain of custody forms. See Figures 2 and 3 and "Ground Water Sampling Workshop -- A Workshop Summary" (U. S. EPA, 1995) for example forms and other documentation suggestions and information. This information coupled with laboratory analytical data and validation data are needed to judge the "useability" of the sampling data.

VII. Notice

The U.S. Environmental Protection Agency through its Office of Research and Development funded and managed the research described herein as part of its in-house research program and under Contract No. 68-C4-0031 to Dynamac Corporation. It has been subjected to the Agency's peer and administrative review and has been approved for publication as an EPA document. Mention of trade names or commercial products does not constitute endorsement or recommendation for use.

VIII. References

Backhus, D,A., J.N. Ryan, D.M. Groher, J.K. McFarlane, and P.M. Gschwend. 1993. Sampling Colloids and Colloid-Associated Contaminants in Ground Water. *Ground Water*, 31(3):466-479.

Barcelona, M.J., J.A. Helfrich, E.E. Garske, and J.P. Gibb. 1984. A laboratory evaluation of groundwater sampling mechanisms. *Ground Water Monitoring Review*, 4(2):32-41.

Barcelona, M.J. and J.A. Helfrich. 1986. Well construction and purging effects on ground-water samples. *Environ. Sci. Technol.,* 20(11):1179-1184.

Barcelona, M.J., H.A. Wehrmann, and M.D. Varljen. 1994. Reproducible well purging procedures and VOC stabilization criteria for ground-water sampling. *Ground Water*, 32(1):12-22.

Buddemeier, R.W. and J.R. Hunt. 1988. Transport of Colloidal Contaminants in Ground Water: Radionuclide Migration at the Nevada Test Site. *Applied Geochemistry*, 3: 535-548.

Danielsson, L.G. 1982. On the Use of Filters for Distinguishing Between Dissolved and Particulate Fractions in Natural Waters. *Water Research*, 16:179.

Enfield, C.G. and G. Bengtsson. 1988. Macromolecular Transport of Hydrophobic Contaminants in Aqueous Environments. *Ground Water,* 26(1): 64-70.

Gschwend, P.M. and M.D. Reynolds. 1987. Monodisperse Ferrous Phosphate Colloids in an Anoxic Groundwater Plume, *J. of Contaminant Hydrol.,* 1: 309-327.

Herzog, B., J. Pennino, and G. Nielsen. 1991. Ground-Water Sampling. In **Practical Handbook of Ground-Water Monitoring** (D.M. Nielsen, ed.). Lewis Publ., Chelsea, MI, pp. 449-499.

Horowitz, A.J., K.A. Elrick, and M.R. Colberg. 1992. The effect of membrane filtration artifacts on dissolved trace element concentrations. *Water Res.,* 26(6):753-763.

Laxen, D.P.H. and I.M. Chandler. 1982. Comparison of Filtration Techniques for Size Distribution in Freshwaters. *Analytical Chemistry*, 54(8):1350.

McCarthy, J.F. and J.M. Zachara. 1989. Subsurface Transport of Contaminants, *Environ. Sci. Technol.*, 5(23):496-502.

McCarthy, J.F. and C. Degueldre. 1993. Sampling and Characterization of Colloids and Ground Water for Studying Their Role in Contaminant Transport. In: Environmental Particles (J. Buffle and H.P. van Leeuwen, eds.), Lewis Publ., Chelsea, MI, pp. 247-315.

Parker, L.V. 1994. The Effects of Ground Water Sampling Devices on Water Quality: A Literature Review. *Ground Water Monitoring and Remediation*, 14(2):130-141.

Penrose, W.R., W.L. Polzer, E.H. Essington, D.M. Nelson, and K.A. Orlandini. 1990. Mobility of Plutonium and Americium through a Shallow Aquifer in a Semiarid Region, *Environ. Sci. Technol.*, 24:228-234.

Puls, R.W. and M.J. Barcelona. 1989. Filtration of Ground Water Samples for Metals Analyses. *Hazardous Waste and Hazardous Materials,* 6(4):385-393.

Puls, R.W., J.H. Eychaner, and R.M. Powell. 1990. Colloidal-Facilitated Transport of Inorganic Contaminants in Ground Water: Part I. Sampling Considerations. EPA/600/M-90/023, NTIS PB 91-168419.

Puls, R.W. 1990. Colloidal Considerations in Groundwater Sampling and Contaminant Transport Predictions. *Nuclear Safety*, 31(1):58-65.

Puls, R.W. and R.M. Powell. 1992. Acquisition of Representative Ground Water Quality Samples for Metals. *Ground Water Monitoring Review,* 12(3):167-176.

Puls, R.W., D.A. Clark, B.Bledsoe, R.M. Powell, and C.J. Paul. 1992. Metals in Ground Water: Sampling Artifacts and Reproducibility. *Hazardous Waste and Hazardous Materials*, 9(2): 149-162.

Puls, R.W. and C.J. Paul. 1995. Low-Flow Purging and Sampling of Ground-Water Monitoring Wells with Dedicated Systems. *Ground Water Monitoring and Remediation,* 15(1):116-123.

Ryan, J.N. and P.M. Gschwend. 1990. Colloid Mobilization in Two Atlantic Coastal Plain Aquifers. *Water Resour. Res.*, 26: 307-322.

Thurnblad, T. 1994. Ground Water Sampling Guidance: Development of Sampling Plans, Sampling Protocols, and Sampling Reports. Minnesota Pollution Control Agency.

U. S. EPA. 1992. RCRA Ground-Water Monitoring: Draft Technical Guidance. Office of Solid Waste, Washington, DC EPA/530/R-93/001, NTIS PB 93-139350.

U. S. EPA. 1995. Ground Water Sampling Workshop -- A Workshop Summary, Dallas, TX, November 30 - December 2, 1993. EPA/600/R-94/205, NTIS PB 95-193249, 126 pp.

U. S. EPA. 1982. Test Methods for Evaluating Solid Waste, Physical/Chemical Methods, EPA SW-846. Office of Solid Waste and Emergency Response, Washington, D.C.

Figure 2. **Ground Water Sampling Log**

Project _____ **Site** _____ **Well No.** _____ **Date** _____

Well Depth _____ **Screen Length** _____ **Well Diameter** _____ **Casing Type** _____

Sampling Device _____ **Tubing type** _____ **Water Level** _____

Measuring Point _____ **Other Infor** _____

_____

Sampling Personnel _____

Time	pH	Temp	Cond.	Dis.O_2	Turb.	[ ]Conc			Notes

Type of Samples Collected

_____

Information: 2 in = 617 ml/ft, 4 in = 2470 ml/ft: $Vol_{cyl} = \pi r^2 h$, $Vol_{sphere} = 4/3\pi r^3$

Figure 3. **Ground Water Sampling Log** (with automatic data logging for most water quality parameters)

Project _____ **Site** _____ **Well No.** _____ **Date** _____

Well Depth _____ **Screen Length** _____ **Well Diameter** _____ **Casing Type** _____

Sampling Device _____ **Tubing type** _____ **Water Level** _____

Measuring Point _____ **Other Infor** _____

_____

Sampling Personnel _____

Time	Pump Rate	Turbidity	Alkalinity	[ ] Conc	Notes

Type of Samples Collected

_____

Information: 2 in = 617 ml/ft, 4 in = 2470 ml/ft: $Vol_{cyl} = \pi r^2 h$, $Vol_{sphere} = 4/3\pi r^3$

WATER SAMPLING FOR CHEMICAL ANALYSIS SOP

PURPOSE

The purpose of this SOP is to provide general procedures for the preparation of water samples for chemical analysis during field investigations. This SOP focuses on the requirements for accurate sample collection and preservation of water samples for representative quality analysis. For this SOP, water sampling refers to those samples whose main constituent is water such as samples collected from surface water, groundwater, and/or waste water. In addition, this SOP assumes bottle sets received from the laboratory will contain the required preservative (i.e., the bottles are pre-preserved by the laboratory, and preservative will not be required in the field).

OTHER EHS SUPPORT SOPs

- SOP-04: Field Documentation
- SOP-05 Sample Management and Shipping
- SOP-08 Field Equipment Operation and Calibration
- SOP-09 Equipment Decontamination

ATTACHMENTS

No attachments

REQUIRED MATERIALS

- Field logbook and field documentation
- Site maps, site layouts, site plans
- Health and Safety Plan
- Appropriate personal protective equipment (PPE)
- Black waterproof and/or indelible ink pens
- Chain-of-custody form, sample labels, custody seals
- Material Safety Data Sheets (from the laboratory, for each preservative type)
- Filters, if applicable
- Laboratory-supplied bottle set, with preservative as needed
- Other approved sample storage containers, if applicable
- Labels, custody seals, coolers, ice, Chain of Custody forms, tape, plastic baggies
- Equipment required, if applicable, to monitor the water sample parameters

1.0 WATER SAMPLING FOR CHEMICAL ANALYSIS

Water samples are collected and analyzed to evaluate the chemical quality of the water. The chemical characteristics of the water aid in understanding the groundwater or surface water system of interest, or is used as a monitoring control for waste water treatment facilities or meeting criteria to discharge treated water.

There are two types of samples that can be collected during a sample event: grab samples or composite samples. Grab samples (or discrete samples) are discrete samples collected at a specific location and time. Composite samples (or homogenized samples) are samples composited from two or more locations at the time of sampling. Composite samples usually represent an averaged concentration for a period of time. Samples collected for VOC analysis are generally not composited or homogenized, unless specified.

Accurate sample collection and preservation is crucial in acquiring representative data. The project work plan or quality assurance project plan (QAPP) should be reference to understand the project needs and sample requirements. The project work plan or QAPP should provide a clear understanding to sample locations, sample identification, analytical testing, number and type of quality control samples, or other project-related needs (objective, equipment, laboratory supplier, purging method-if required, etc.).

1.1 General Water Sampling Considerations

Although the procedures used to fill sample bottles may seem a minor consideration, filling them improperly can jeopardize the careful work that may have gone into properly purging a well to produce minimally-disturbed, representative sample. Improper sampling techniques can cause changes in sample composition due to agitation and exposure to air which can result in the loss of contaminants by volatilization or degassing. The following are general considerations when preparing for collection of water samples:

- The specific order of sample collection, processing and preservation for specific analytes should be adhered to consistently throughout the project. The recommended sequence for sample collection and processing is often based on logistics for maintaining sample integrity and based on the analytes' sensitivity to change. The sequence can be modified, depending on the types of samples to be collected and on data objectives.
- Volatile organic compound (VOC) samples (and other organic-sensitive analytes) are typically collected first if collecting samples for multiple analytes. The more sensitive the analytical parameters being collected (e.g., VOCs and redox-sensitive metals), the more cautious the filling procedures should be. A suggested sample order, if not specified in the project work plan or QAPP may include:
    - VOCs
    - Semi VOCs (SVOCs)
    - Herbicides/Pesticides/Polychloride Biphenyls (PCBs)
    - Total Petroleum Hydrocarbons (TPH)
    - Metals, Cyanide, or Radionuclides
    - Other water-quality parameters (microbiological, anion/cation, ammonia, sulfides/sulfates, nitrates/nitrites, etc.)
    - Nutrients (e.g., phosphorous)
    - Filtered samples (e.g., dissolved metals, ultra-trace metals, etc,).
    - Additional sample order consideration might include a sulfate sample collected before samples preserved with sulfuric acid (e.g., nitrogen series, phenolics).
- If questions exists pertaining to sampling or laboratory concerns check with the laboratory(s) or laboratory-project manager to ensure the sample containers, required sample volume, preservation,

and holding times are understood prior to the project start. Several analytes in a sample suite may be grouped together in one (or more) bottle based on the preservation method and analytical testing method.

- Laboratory quality assurance and control procedures should be referenced prior to field sampling to ensure accurate the project work plan and chain of custody procedures are followed. Sample management and shipping can be referenced in SOP-05. A laboratory example of holding times can be reference as an attachment to SOP-05.
- Ensure field equipment is properly decontaminated in accordance with the guidelines provided in SOP-09 and is calibrated with the guidelines provided in SOP-08 or the instrument's manual.
- During purging and/or sample collection the flow should be a smooth, solid stream of water with no air or gas bubbles in the tubing or flow cell. Gradually adjust the pumping rate to eliminate bubbles, if present.
- Prepare sample containers. Keep sample containers capped until it is time to fill them to avoid possible container contamination.
- If water samples are collected via bailer, it is recommended to use a bottom emptying devise to slow/control the release of the water sample into the laboratory bottles.
- Any equipment (e.g., flow through cell, multi-parameter quality meter) used to monitor water quality parameters will be disconnected to allow the sample to be collected directly from the discharge tubing.
- Groundwater samples from a purged well will be collected in a continual process following the purge cycle.
- For groundwater samples collected by using low-flow sampling techniques, the pumping/discharge rate should:
    - Be high enough to fill sample bottles efficiently and with minimal exposure to atmospheric conditions, but low enough to minimize sample alteration or aeration.
    - Allow for a smooth and uniform flow, preferably about 250 millimeters per minute.
    - Remain unchanged from the purging cycle to the sampling cycle.

1.2 Water Sample Procedures

Water samples are generally collected

- Directly from a sample port, faucet, or spigot at the sample point location.
- Directly or indirectly at a surface water location (refer to SOP-61) at the sample point location or via an intermediate container or drop-down tube.
- Directly or indirectly from a well that has been purged of groundwater (SOP-43 and SOP-44) using down-hole tubing or via an intermediate container (i.e., bailer).

Do not use a bottles containing preservative to directly collect the water sample from a surface water body, pond, or lagoon. Instead employ an intermediate container for sample collection and transfer the sample to the bottle containing preservative.

Ensure sample tubing has been disconnected from any inline equipment (e.g., flow-through cell) prior to filling sample jars.

Assuming all pre-sample activities (e.g., purging, stabilization of water quality parameters, bottle labeling) are completed

1) For water samples from a port, faucet, or spigot, disinfect the port, faucet, or spigot with an alcohol swab or approved-cleaning detergeant. Open the sampling port and allow the water to flow (about 250 ml/min) for 2 to 3 minutes. Collect the discharged water into a bucket.

2) If sampling for VOCs, fill the volatile organic analyte (VOA) vials first.
   a) Slowly fill each 40 ml VOA vial with water taking care not to let it over flow and lose preservative.
   b) Completely fill the VOA vial with water so a meniscus is formed at the top of the container.
   c) Place the cap with Teflon septum on the vial top and secure.
   d) Turn the VOA vial upside down and check for the presence of air bubbles. Tap the bottom of the VOA vials to dislodge any bubbles that may have formed around the cap or sides.
   e) If no bubbles are present, the sample is considered to have "No Headspace" and the sampling for that vial is complete. Move onto the next VOA vial or sample container.
   f) If bubbles are present, remove the cap and fill the VOA vial with additional sample water to completely fill the vial and form a meniscus. Replace the cap and reconfirm there are no bubbles in vial. If air bubbles are still present after three attempts, discard the sample jar and obtain a new VOA vial for sample collection.
   g) If the purge water has observable entrained gas bubbles in the effluent, or if the sample effervesces or fizzes during collection of the water sampling into the (HCl) pre-preserved VOA, the collected sample and/or vial will be discarded. Instead, use a new VOA vial containing no preservative, or rinse the VOA vial with the representative purge water to completely remove the HCl preservative, to collect the sample. The sample will be contained in the VOA vial with the "No Headspace" procedures d) to f) and the chain of custody will note the sample is unpreserved. It is recommended to inform the laboratory of the unpreserved sample and holding time change.

      Notes:
      - A sample that is off-gassing in a sealed container may cause a potential eruption hazard.
      - The hold time of an unpreserved sample is reduced from 14 days to 7 days.

3) Fill remaining sample containers for other analytes, and seal sample containers. Ensure sufficient volume is available to fill the bottle set or testing method criteria ("No Headspace" for other analytes) is achieved. Consult with the project manager, project work plan, QAPP, or laboratory representative if potential concerns arise to assess possible corrective actions.
4) If water samples require filtration (further discussed in the next section):
   - Attach the in-line disposable filter to the sample tubing or hose. Using the water pressure from the pump, press the water through the filter. Allow (and discard) a minimum of 100 milliliters of water to pass through the filter cartridge before filling the appropriate sample containers with the sufficient container volume. Discard any filters that become clogged and attach a new filter as appropriate. Discard filter between sample locations.
   - Set up the filtration assembly, positive vacuum system, or syringe. Transfer the representative water into the appropriate holding chamber. Push or press the sample across the filter. The filtered sample will be placed directly into the appropriate sample jar, or transferred from the filtered-water chamber and into the appropriate sample jar. Discard any filters that become clogged and attach a new filter as appropriate. Discard filter between sample locations.
5) Complete the chain of custody noting sample identification, time, date, analytical testing required, quality control samples, and any other notes that would be useful to a laboratory. (For instance, if a sheen is observed in the sample, note on the chain of custody. This may assist the laboratory in preventing potential instrument issues.)
6) Place, package, and ship the appropriately labeled sample containers to the subcontracted laboratory following the guidelines provided in SOP-04 Field Documentation and SOP-05 Sample Management and Shipping.
7) Discard purged water in accordance with the project work plan and in accordance with SOP-07 Investigative Derived Waste.

1.3 Field Filtration Guidelines

Filtration is the physical process used to separate the particulate and aqueous fractions of a water sample. Samples are filtered for several purposes; for example, to remove microorganisms in order to help preserve ambient analyte concentrations, to remove suspended materials that interfere with specified analytical procedures, and to determine chemical speciation and fractionation of trace elements for geochemical studies.

Field filtration may be required for dissolved metals, alkalinity, hexavalent chromium, ultra-trace metals, total organic content (TOC), dissolved organic content (DOC), and speciated analytes such as ferrous iron, arsenic and selenium. In some of these analytes, zero headspace is required in the bottle. Be sure to check with the project work plan, QAPP, and laboratory for sample collection and containment requirements.

Accomplish in-line filtration through the use of disposable, high capacity filter cartridges (barrel-type) or membrane filters in an in-line filter apparatus. The high capacity, barrel-type filter is preferred due to the higher surface area associated with this configuration. If a membrane filter is utilized, a minimum diameter of 142 mm is suggested. The filter size and material should be appropriate for the expected quality of the water sample, the volume of water to be filtered, the analyte(s) to be measured, and the method of filtration. The filtration technique should minimize the sample exposure to air.

A generally accepted filter size is 0.45 microns, however, 0.2 micron filters can be used if the removal of bacteria or metal colloids is required. The most commonly used field filtration techniques are:

- In-line disposable filters (filter during sample collection)

Examples of a field filters including barrel-type filter cartridge or membrane filter.

- Hand-held and operated positive vacuum pump or syringe filters (filter after collection)

Examples of a hand-help positive vacuum pump and syringe-type filter.

2.0 RECORDS

Field notes will be kept in a bound field logbook or approved field documentation following the format specified in SOP-04 Field Documentation. Field notebooks and field documentation should be used to record:

- Sample Identification
- Sample time and date
- Media collected
- Sample location
- Sample testing method
- Location and identification of quality control samples and types
- Chain of Custody forms

STREAMFLOW MEASUREMENT

PURPOSE

This SOP outlines the general protocols used to measure streamflow discharge using flow meters and estimates stream discharge using floats in wadeable surface waters. Discharge measurements and estimates in the described methodology ensure accurate and uniform results. The manufacturer's manual should be referred to for standard operating procedures and operating instructions. It is beyond the scope of this SOP to describe all alternatives to equipment type, procedures, and maintenance used in streamflow measurement.

Safety Precaution: When working near the edges of water bodies or within water bodies, adequate precautions must be taken to ensure the safety of field personnel. For example, the sampling team member should use caution when approaching and working at the edge of the water body, where bank failure may pose a risk to sampling personnel. Factors such as safe access, water temperature, and bad weather may influence measurement acquisition and should be discussed with the project team.

OTHER EHS SUPORT REFERNCED SOPs

- SOP-04 Field Documentation
- SOP-06 Pre-Field Mobilization
- SOP-08:Field Equipment Operation and Calibration

ATTACHMENTS

- Attachment A: Field Data Sheet for Discharge Measurements (example and blank form)
- Attachment B: Tutorial - Streamflow Measurement Procedure

REQUIRED MATERIALS

- Field logbook and field documentation
- Site maps, site layouts, site plans
- Health and Safety Plan
- Appropriate personal protective equipment (PPE)
- Black waterproof and/or indelible ink pens
- Safety equipment (including personal floatation device and lifeline, if required)
- Doppler, mechanical, or electronic flow meter (e.g., SonTek Flo-Tracker, Marsh-McBirney flow meters)
- Top setting wading rod (marked in feet or meters)
- Measuring tape
- Stopwatch (capable of 0.1 second measurements)
- Stakes (to anchor measuring tape)
- Hammer or mallet
- Wading boots or wading pants
- Machete
- Camera

1.0 STREAM GAUGING

Stream gaging provides hydrologic information about local surface waters that may prove useful in many ways. Possible uses include:

- Characterizing current water-quality conditions
- Determining input rates of various pollutants into lakes, reservoirs, or estuaries
- Computing the loads of sediment and chemical constituents
- Understanding biological effects of contamination
- Setting permit discharge requirements of treated wastewaters
- Setting minimum flow requirements for meeting aquatic life goals
- Developing, maintaining, or operating recreational facilities
- Evaluating surface and ground water interaction
- Undertaking scientific studies of long-term changes in the hydrologic cycle.

Stream gaging in the field involves measurement of the stream velocity (based on the revolutions of the stream gage) for each cross-sectional segment of the stream, and compilation of each segment's velocity over the entire width of the stream. As with any scientific or mathematical endeavor, the precision and accuracy of the results is only as reliable as the precision and accuracy of the data. Reliable stream gage data is dependent on the care and consistency field personnel apply to their field stream gaging techniques.

Safety Precautions: Personal protective equipment (PPE) must be worn when working in known waters where the potential for adverse health effects exists, or in unknown waters that have been determined impaired but the pollutants have not been identified. If stream gauging is being performed in a boat, appropriate boat safety will be required. The site-specific Health and Safety Plan (HASP) will be referenced for the appropriate precautions when conducting streamflow measurements and PPE requirements.

Monitoring may include field activities during all stages of the hydrologic cycle, including high discharge/flood stage conditions. If high discharge conditions are determined unsafe by any field staff, do not conduct the task during that time. At all times, the field staff will wear personal floatation devices when measuring streamflow discharge. A safety line may be required under some circumstances.

1.1 Flow Meters

There are several methods and flow meters available to measure the velocity of a stream. These include manual methods and flow meters using turbine, vortex shedding, swirl, electromagnetic, electromagnetic, Doppler (also referenced as ultrasonic or acoustic), or ultrasonic-transit time. This SOP will focus on the more commonly used methods of electromagnetic and Doppler. The principle behind each method is briefly described below.

- Electromagnetic flowmeters operate on Faraday's law of electromagnetic induction that states that a voltage will be induced when a conductor moves through a magnetic field. In general, the stream water will serve as the conductor, and a magnetic field is then created by energized coils outside the meter. The amount of voltage produced is directly proportional to the flow rate.
- Doppler meters measure the frequency shifts caused by liquid flow. Two transducers (one to transmit and the other to receive signal) are mounted in a case. A signal of known frequency is sent into the liquid to be measured. Solids, bubbles, or any discontinuity in the liquid, cause the pulse to be reflected to the receiver element. Because the liquid causing the reflection is moving, the frequency of the returned pulse is shifted. The frequency shift is proportional to the liquid's velocity.

The meter type selected should consider the depth and velocity ranges, and the conditions within the section. If possible, a newly rated and clean meter should be used.

Discharge measurements that are not stored in a flow controller will need to be manually recorded in a field log book, or appropriate field data sheets. A river gauging field form is included as **Attachment A**.

Discharge measurements that are stored electronically will be downloaded and stored in electronic project records. Refer to user manuals for instructions on how to download such data. The final calculated discharge measurements will be written in the field log book or appropriate field documentation.

1.1.1 Flow Meter Equipment Overview

A working knowledge of flow meter operation, as well as the limitations of operation, must be attained prior to the use of this type of equipment. The operation of these meters must follow the instructions provided by the manufacturer in the user manual. **Table 1** outlines manufacturers' specifications for three flow meters that may be selected for use.

Table 1: Examples of Flow Meters and Manufacturer Specification

	Son-Tek FlowTracker® Handheld ADV	**Marsh-McBirney Model 2000 Flo-Mate**	**Marsh-McBirney Model 201**
Method	Acoustic Doppler	Electromagnetic	Electromagnetic
Range	±0.003 to 13 ft/sec (±0.001 to 4 m/sec)	-0.5 to 19.99 ft/sec 0.15 to 6.1 m/sec	-0.5 to 10 ft/sec 0.15 to 3.1 m/sec
Resolution	0.0003 ft/sec (0.0001 m/sec)	Not Applicable	Not Applicable
Accuracy	±1% of measured velocity ±0.25 cm/sec	±2% of measured velocity	±2% of measured velocity
Operating Temperature	-20 C to 50 C	0 C to 72 C	0 C to 65 C
Storage Temperature	-20 C to 50 C	0 C to 50 C	-1 C to 40 C
Image			

1.1.2 Flow Meter Cautions

Specific cautions exist for flow meter equipment. It is important to read the manufacturer's user manual and to become familiar with the specific cautions of each piece of equipment prior to its use. For information on troubleshooting flow meter errors, refer to the appropriate user manual.

The following are general cautions should be considered during selection of a flow meter:

- Flow meters can be influenced by interference from underwater objects. Reflections can occur from the bottom, the water surface, or from submerged obstacles such as rocks or logs. If the sampling volume is downstream of an underwater object, velocity data will be altered. When

working in very shallow water or when underwater obstacles are ≤0.5 feet away from the sampling volume, reflections can potentially affect velocity data.

- Over-tightening the thumbscrew on some models (e.g., Marsh-McBirney sensors) could damage the sensor.
- Batteries should be removed from flow meter units prior to long term storage.

1.1.3 Zero Check Calibration Method Procedures

Few flow models (e.g., Marsh-McBirney, Inc. Model 201D Portable Water Flow Meter) cannot be field calibrated, and few flow models require zero-check calibration. Check with the user's manual to determine if zero-check calibration is required. If the flow meter model can be zero-check calibrated, the following are the general guidelines for calibration:

1. Place a clean sensor in five-gallon plastic bucket of water.
2. Keep the sensor at least three inches away from the sides and bottom of the bucket.
3. Let the sensor set in the bucket for 10 to 15 minutes to make sure the water is not moving.
4. Use a filter value of 5 seconds. Zero stability is ±0.05 feet/second.
5. Zero adjust the meter.
6. Record the calibration in the field logbook or field calibration sheet.

In the Marsh-McBirney Model 2000 Flo-Mate, the hand-held portable controller has an automated calibration sequence. To complete the zero-check calibration using the automated process:

1. Follow the step 1) to 3) above.
2. Initiate the zero start sequence by pressing the STO and RCL keys at the same time. The number 3 will be displayed.
3. Decrement to zero with the ⇓ key.
4. The number 32 will be displayed.
5. The unit will decrement itself to zero and turn off. the unit is now zero.
6. Record the calibration in the field logbook or calibration sheet.

Note: Each key in the zero adjust sequence must be pressed within 5 seconds of the previous key. If the time between the key entries exceeds 5 seconds or if a wrong key is pressed, the unit will display an ERR 3. If ERR occurs, turn the unit OFF and then back ON and try again.

1.1.4 Pre-Field Meter Check

A working knowledge of flow meter operation, as well as the limitations of operation, must be attained prior to the use of this type of equipment. The operation of these meters must follow the instructions provided by the manufacturer in the user manual. If the flow meter comes with a handheld controller, the controller should be examined to ensure the recorder is set to the specifications of the project work plan. The controller should be checked for the following:

- Run the program to verify the recorder and recorder performance is operational.
- The handheld controller should be vented (loosen the metal communications cap) and field diagnostics should be run to monitor the following real time diagnostics:
  - Recorder status
  - Temperature
  - Battery diagnostic

- Raw data display (a continuous display of raw velocity and signal to noise)
- SNR Ratio - The SNR is the most important quality control data provided and is a measure of the strength of the reflected acoustic signal relative to the ambient noise level of the unit – this value should be greater than 10 decibels or the best operating conditions.
- System clock.

- Setup Parameters
  - Units and mode
  - Average time
  - Salinity (a critical value if computing sound speed).

1.2 Wading Rod

A standard top-setting wading rod should be used to for depth measurement when using flow meters. The flow meter probe must be mounted according to the user manual to achieve accurate measurements. The wading rod should be marked in 0.1 foot increments (2 cm) along the rod and be adjustable to the stream depth. Increments can be further estimated to increase the accuracy of depth of measurements by using a tape measure or equivalent to 0.01 foot (2 mm).

2.0 MEASURING DISCHARGE USING FLOW METERS

2.1 Cross-Section Selection Guidelines

The general areas for gauging the stream will have been selected as part of the project setup, but the exact location of the measurement will need to be selected based on field conditions. Once the location is selected, gauging the stream is a straightforward process. The following site characteristics for cross-section locations are critical for accurate discharge measurements:

- The banks of the stream are uniform and straight.
- The site lies within a straight reach of stream and flowlines are parallel to each other. Avoid sites directly below sharp bends.
- Flow is relatively uniform and free from eddies, slack water, reverse flow, and excessive turbulence.
- The streambed is fairly uniform and free from large obstructions, such as boulders and aquatic vegetation. Rocks and debris may be removed from the section to improve measurement.
- Water depths >0.5 feet (3 cm) are preferred, but a minimum depth of >0.1 feet (1 cm) is required.
- The flow is perpendicular to the tagline at all points.

Finding a cross-section that achieves the above criteria in the natural environment is difficult. It may be necessary to "engineer" the stream by moving rocks, logs, branches, algae mats, rooted aquatic vegetation, debris, or other obstructions in order to construct a desirable cross-section free of turbulence. Additionally, rocks or other obstructions can be placed in the slack water to create an artificial bank such that no or minimal stream flow goes over or through the obstructions. If this is necessary, make all adjustments and wait a few minutes for the system to stabilize prior to beginning the stream flow measurements. Note the conditions on the measurement field sheet:

If a series of readings are to be taken at a particular transect in the future, it is advisable to install a staff gage in order to provide a relationship between discharge and stream stage over time. A staff gage can be mounted on a pre-existing structure, such as a bridge abutment, or could be a stake with a simple measuring scale stapled to it or painted on it. This stake would be hammered into the ground within the bounds of the flowing stream, preferably in calm or still water to provide accurate readings.

2.2 Setting the Tagline and Vertical Spacing Guidelines

A tagline is set up by stretching a tape measure across the stream so that it is taut and perpendicular to the stream flow lines once the cross section has been determined. The tagline should be directly above the cross-section and must not touch the water surface. Facing downstream, identify the starting edge as either left edge of water (LEW) or right edge of water (REW). Determine the width (actual measurement or approximation) of the stream with active stream flow. Slack water areas should not be included in the width, and the stream edge is considered the edge of slack water.

- Discharge measurements will be taken at several verticals along the tagline. Verticals are defined as a point along the cross-section where a water velocity will be measured at a defined depth (or depths). A general rule of thumb for verticals is as follows:
  - Stream width <20 feet (6 meters): 12 to 20 verticals should be targeted. For sections less than 2 meters in width, use a spacing of 0.10 m.
  - Stream width $\geq$ 20 feet (6 meters): 20 to 30 verticals should be targeted.

- The distance between the verticals should be greater than the diameter of the meter bucket wheel.

- Calculate the approximate spacing of verticals by dividing the stream width by the number of desired verticals.
- The average velocity in one vertical should not exceed 10% of the total stream discharge. If total discharge in the vertical exceed 10%, space verticals more closely together in areas that are deeper or that have a greater velocity than the majority of the stream.
- The spacing of verticals may be farther apart in areas that are shallower or have lower velocity compared to the majority of the stream.
- Uniform spacing across the tagline should only be used if the stream is of relative uniform depth and velocity regimes.
- Verticals should never be spaced less than 0.2 feet apart. For instance, small streams with a flowing width of less than 2.2 feet (<1 m) may have less than 12 verticals and as few as one vertical during very low stream flow.
- Avoid measurement sections that are adversely affected by excessive winds.

2.3 Measuring Velocity Guidelines

The number of measurements taken at each vertical is dependent upon the depth of the stream. A general rule of thumb for determining the number of measurements is as follows:

- Stream depth ≤ 2.5 feet (0.75 m)*:* Discharge is measured at a depth of 0.6 below the water surface at each vertical. This is referred to as the 0.6-depth method. For instance, if the total depth of the stream is 2 feet (0.6 m), the velocity should be measured at a depth of 1.2 feet (0.35 m) below the water surface.
- Stream depth > 2.5 feet (0.75 m)*:* Discharge is measured at 0.2 and 0.8 of the total depth below the water surface at each vertical. This is referred to as the two-point method, or the 0.2- and 0.8-depth method. For example, if the stream depth is 3 feet (1 m) at a particular vertical station, the velocity measurement should be taken at 0.6 feet (0.2 m) and another at 2.4 feet (0.6 m). The average of the two readings will be used to average the velocity for the vertical. A standard top-setting wading rod can be adapted to this method by following these instructions:
  - To set the rod at the 0.2-depth, position the setting rod at half the water depth.
  - To set the rod at the 0.8-depth, position the setting rod at twice the water depth.
  - Avoid measurement sections that are adversely affected by excessive winds.

2.4 Stream Gauging Procedures

1. String the tagline across the section so that it is perpendicular to the direction of flow. If the flow is not perpendicular to the tagline, measure the angle of flow off perpendicular and apply the correction to the measured velocity.
2. Use a GPS, if required, to mark or identify the location of the transect.
3. Determine and mark the spacing of the verticals on the tagline. If possible, a minimum of 25 to 30 verticals will be measured.
4. When sounding the depth of the stream, ensure the rod does not sink into a soft streambed. Attach a bottom plate the wading rod.
5. If a boat is used to take the readings because the stream is deep or moving swiftly, the boat must be stabilized against lateral movement at each transect station. A rope tied to existing secure objects such as trees, guardrails, or other stationary objects (one on either side of the stream) should be attached to the boat through cleats on the boat. The objects should be about as far upstream of the transect as the width of the stream.
6. Stand to the side and downstream of the wading rod, to avoid interference to the velocities

measurements.

7. Water depths will be measured to the nearest 2.5 inches (1 cm).
8. Ensure the wading rod is held in a vertical position and the meter is aligned parallel to the direction of flow. A fish eye bubble may be attached to the top of the wading rod to assist in keeping the rod vertical.
9. Rocks, logs, or other obstructions should not be moved during the measurement process as this may cause the stream flow to change in an area of the stream where velocity has already been measured. Once the process of measuring velocity has begun, the stream should not be altered further.
10. Ensure the offsetting bracket attaching the probe to the wading rod is securely fastened.
11. Record the location of the starting edge on the field data sheet (LEW or REW).
12. If the starting edge has a water depth, record the depth. No velocity measurements should be made at the starting or ending edges.
13. Facing upstream, place the wading rod behind the tape measure at the first vertical and record the location and stream depth. Velocity readings should be averaged over a time period of 25 seconds to 45 seconds depending on in-stream conditions.
14. Once the stream velocity has been measured and recorded at the first vertical, continue measuring water velocity at each vertical, making sure that the appropriate number of measurements are being taken based on water depth (0.6-depth method vs. two-point method). Continue until you have reached the end of the cross-section. Record the location and depth of the ending edge.
15. Some instruments (e.g., SonTek Flow Tracker) record depth and velocity information as you progress along the cross-section and then calculate discharge once the ending edge has been reached. Be sure to record the final calculated discharge value on a field data sheet.
16. Other instruments (e.g., Marsh-McBirney Flo-Mate) do not record information or calculate discharge, and therefore depth and velocity measurements must be manually recorded on a field data sheet (Attachment A). The procedure for manually entering data is as follows:
    A. Record the starting edge (LEW or REW) in the first cell under the “Station” column. The actual location of the edge in relation to the tagline should be recorded. For example, if the starting edge occurs at 3 feet (1 m) on the tagline, the starting edge will be recorded as 3 (1).
    B. Record the starting edge depth in the first cell under the “Depth” column and the velocity in the first cell under the “Velocity”, if these exist at the starting edge. If there are no depth and velocity, record a 0 in these cells.
    C. Proceed to the first vertical to measure the velocity. Record the depth and the velocity.
    D. If using the 0.6-method, fill out one row per vertical. If using the two-point method (0.2- and 0.8-depth method), fill out two rows for each station and designate the measurement point in parenthesis next to the station. For example, if the two-point method is used at station 5, one row would contain the station name of “5 (0.2)” and the next row would contain the station name of “5 (0.8)”. Record the depth and velocity for both points in the appropriate cells.
    E. Continue until you have completed the final velocity measurement. Record the ending edge (LEW or REW) as well as the depth and velocity, if these exist.
    F. Total discharge calculations should be done in the office using the mid-section equation.

2.5 Estimating Discharge Using Floats

A less accurate method of estimating stream discharge is through the use of floats. All measurements

using this procedure should be flagged as estimated on field data sheets and on final data reports. Floats can be used if the stream cannot be safely waded, or if a flow meter is not accessible. The procedures to estimate discharge using a float is as follows:

1. Locate a long, relatively straight section of stream that allows for travel downstream for about 20 seconds. A shorter time interval can be used if these stream conditions cannot be met.
2. Select two cross sections along the reach—one at the top of the study section and one at the bottom.
3. Measure the width of both cross-sections and in few cross sections in between the upper and lower cross section. This will assist in providing an average width of the stream. If the stream is not wadeable, estimate the width. Record the width on the field data sheet.
4. Stretch a tagline along the streambank to account for distance traveled during test. Preferably, the distance will be between 30 to 50 feet (10 to 15 meters). This distance should provide a length for a float to travel 20 seconds on the stream. A shorter run length may be used, as needed.
5. Divide the stream into 2-3 longitudinal profiles. Measure or estimate the depths at these profiles. On the field data sheet record the nearest bank (REW/LEW) as 0. Record the farthest bank as the total width of the stream.
6. One person will be positioned upstream at the starting point on the tagline at the first longitudinal cross section point. The second person will be positioned at the downstream tagline at the point designated as the end of the run. The person at the end of the run will have a stopwatch or equivalent, capable of measuring time to the nearest tenth of a second.
7. The person at the starting point will place or gently toss a floating object (large stick, orange, hedge apple, etc.) just upstream of the top cross section within the first longitudinal profile area. When the object crosses the upstream cross section, the person will yell out “Start” and the person at the end of the run will start the timer.
8. When the object crosses the downstream cross section, the person with the timer will stop the timer.
9. The distance and the length of time the object took to travel that distance will be recorded.
10. Repeat Steps 6 to 9 for the remaining profiles.

3.0 DISCHARGE CALCULATION

Stream discharge values shall be calculated using the mid-section discharge equation. The mid-section method assumes that the velocity sample at each point represents the mean velocity in a rectangular subsection. The basic equation is:

$$Q = \Sigma\ (a\ \nu)$$

Where:

Q = total discharge
a = individual area of a rectangular subsection, the product of width (w) and depth (d) for subsection
ν = velocity of the current in a subsection

The discharge calculation for subsection 4 (darkened, solid box) in **Figure 1**:

Figure 1: Mid-section Discharge Definition Sketch

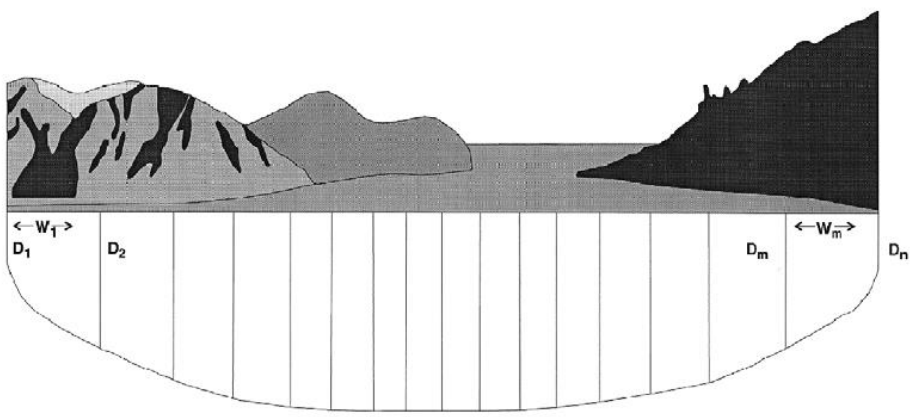

$$Q = \left(\frac{D_1 + D_2}{2}\right)\left(\frac{V_1 + V_2}{2}\right)W_1 + \ldots + \left(\frac{D_m + D_n}{2}\right)\left(\frac{V_m + V_n}{2}\right)W_m$$

Q = discharge, D = depth, V = velocity, W = width (Rantz and others, 1982)

The preceding equation has been summarized in the following steps.

1. Calculate the average velocity for any multiple depth measurements.
2. Calculate the width of the verticals. The first station width is equal to Y2 the difference between the first station and the second station. The second station width is equal to Y2 the difference between the first station and the third station. The last station width is equal to Y2 the difference between the last station and the preceding station.
3. Sum the widths to ensure that this value is equal to the distance between the LEW and REW.
4. Multiply the width by the depth of each vertical to determine the area.
5. Multiply the area by the velocity of each vertical to determine the discharge for each vertical.
6. Sum the discharges for the total discharge of the measurement.

4.0 DECONTAMINATION AND MAINTENANCE

Any equipment, supplies, or apparel, which has been exposed to potentially contaminated stream water must be decontaminated. Decontamination procedures are outlined in SOP-08 Field Decontamination; Additional decontamination may also include:

- Spraying the equipment with 0.001% bleach solution, following with a rinse of tap water and a second rinse of distilled water to remove the bleach and protect equipment (and skin) from damage.
- If measurements are made in water carrying noticeable suspended sediment, clean the meter immediately after each measurement.
- Current meters may need to be cleaned throughout the sampling season. The specific cleaning instructions should be followed in accordance with the user's manual. Under most circumstances, the sensor can be cleaned with mild soap and water to keep the carbon electrodes free of non-conductive grease or oils. If problem persist after cleaning with soap and water, clean the electrodes with a very fine grit (600) sandpaper. Hydrocarbon solvents should not be used on the sensor as they damage the sensor.

Maintenance on the stream gaging equipment should be performed in accordance with manufacturer's recommendations. General maintenance guidelines may be required in the following:

- Examine the meter cups or vanes, pivot and bearing, and shaft for damage, wear, or faulty alignment before and after each discharge measurement.
- Check the balance of the meter if it is on a hanger. Check the alignment of the rotor axis with a hanger or wading rod, and adjust the conductor wire to prevent interference with meter balance and rotor spin.
- Clean and oil meters daily when in use.
- Surfaces to be cleaned and oiled are the pivot bearing, pentagear teeth and shaft, cylindrical shaft bearing, and thrust bearing at the cap.
- Spin the rotor after oiling to make certain it operates freely. If the rotor stops abruptly, find the cause and correct the trouble before using the meter. Record the duration of spin measurements in the field notes or field log book. If the spin duration is observed to be obviously decreased, the bearing may require attention.
- Replace the pivot as often as necessary. The pivots tend to wear more easily than most other components. Examine the pivot after each measurement. Replace a fractured, rough, or worn pivot.
- Keep the pivot and pivot bearing separated except during measurements. Use the raising nut if provided, or, for pygmy meters, replace the pivot by the brass plug.
- Most minor repairs can be made in the field. Repair attempts, however, should be limited only to minor damages. This is particularly true of the rotor because minor dents in the bucket wheel or cups can have a large influence on the meter rating. Unless minor dents in the cups can be straightened out to "like new" condition, the entire rotor should be replace with a new one.

5.0 RECORDS

Field notes will be kept in a bound field logbook or approved field documentation following the format specified in SOP-04 Field Documentation. Specific documentation may include health and safety documentation, precipitation data, and photographs. Hardcopy discharge records, including all related quality control documentation, must be maintained in permanent project files.

- Required site maps and HASP forms
- Instrument calibration
- Water gauging data (including but not limited to):
  - GPS coordinates
  - Routine maintenance
  - Proper installation and mounting of flow meter probes
  - Field diagnostics
  - Routine factory calibration
  - Routine in-house calibration
  - The start and end of measurement gauge heights
  - Indicators of rising, falling or steady stage waters
  - Channel shape
  - Flow pattern (including upstream and downstream)
  - Stream bed conditions
  - Equipment type and condition
  - Details about the surrounding land and land use
  - Details about and located within the water body
  - Conditions existing at the bank
  - Site conditions (e.g., floating oil or debris, gassing, direction of stream flow)
  - Water conditions (e.g., turbid, wave height)
- Weather observations (e.g., temperature, wind speed and direction, cloud coverage).
- Any problems encountered or deviations from this SOP.
- Summary of daily activities and personnel onsite.

ATTACHMENT A

STREAM GAUGING FIELD FORM

EHS Support consider it done

STREAM DISCHARGE MEASUREMENT FORM

Project Name: ______________________ Project Number: ______________________

Stream Name: ______________________ Date: ______________________

Coordinates: ______________________ Field Technician(s): ______________________

Condition of Streambank: ☐ Eroded ☐ Vulnerable ☐ Stable Weather Conditions: ______________________

☐ Heavy Vegetation ☐ Muddy ☐ Rocky Equipment: ______________________

Cross-Section Location (or description): ______________________

Width of Stream ________ (ft m) Time Began: ________ Time Ended: ________

Station ID	**Width (W)**	**Depth (D)**	**Area (A) (A = W*D)**	**Float Method Only**		**Velocity (V)**	**Average Velocity (V_A) (2 point method)**	**Discharge (Q) (Q = A*V)**	**Comments**
				Run Length	**Time**				
LEW or REW	ft / m	ft / m	ft^2 / m^2	ft / m	seconds	ft/sec / m/sec	ft/sec / m/sec	ft^3/sec / m^3/sec	
							TOTAL DISCHARGE (ΣQ)		ft^3/sec / m^3/sec

Stream width <20 feet (6 meters): 12 to 20 verticals should be targeted.
Stream width >20 feet (6 meters): 20 to 30 verticals should be targeted.
Stream depth ≤ 2.5 feet (0.75 m): Discharge is measured at a depth of 0.6 below the water surface at each vertical.
Stream depth > 2.5 feet (0.75 m)**:** Discharge is measured at 0.2 and 0.8 of the total depth below the water surface at each vertical.

Signature: ______________________

SURFACE WATER SAMPLING

PURPOSE

This SOP provides guidance on the collection of representative water samples from streams, rivers, lakes, ponds, lagoons, and surface impoundments. It includes water samples collected from depth and at the surface. Surface water samples will only be collected as discrete samples.

Safety Precaution: When working near the edges of water bodies, adequate precautions must be taken to ensure the safety of sampling personnel. For example, the sampling team member should use caution when approaching and working at the edge of the water body, where bank failure may pose a risk to sampling personnel. The person performing the sampling should be on a lifeline and be wearing appropriate personal protective equipment (e.g., personal floatation device). When conducting sampling from a boat, appropriate boating safety procedures should be followed.

Factors such as safe access, water temperature, and bad weather may influence sample acquisition and should be discussed with the project team.

Relevant EHS Support SOPs

- SOP-04 Field Documentation
- SOP-05 Sample Management and Shipping
- SOP-08 Field Equipment Operation and Calibration
- SOP-09 Equipment Decontamination
- SOP-46 Water Sampling for Chemical Analysis.

Attachments

- Attachment A Depth Grab Sampler Types

Required Materials

- Air monitoring instrumentation (e.g., PID) and supplies
- Field logbook and field documentation
- Health and Safety Plan (HASP)
- Indelible ink pens and waterproof marking pen
- Appropriate personal protective equipment (PPE, including personal floatation device and lifeline, as required)
- Surface water collection equipment
- Water quality meter
- Measuring equipment (tape, water level indicator)
- GPS
- Camera
- Decontamination supplies
- Appropriate sample containers, sampling kits, labels, coolers, ice, Chain of Custody forms, tape, plastic baggies
- Duct tape and wrapping tape.

1.0 GENERAL SURFACE WATER SAMPLING PROCEDURES

The objective of surface water sampling is to collect a small volume of water that is representative of a water body. Therefore, actual sampling locations may need to be modified in the field prior to initiation of the sampling program to ensure that the sample is representative of the water body. For example, flow conditions, water level, and suspended solids might affect sample representativeness and samplers should be prepared to discuss changes with the project team and make in-field adjustments. It should also be noted that when surface water samples are collected from the same location as other data collection activities (e.g., flow monitoring, depth gauging, sediment sampling), water samples should be collected first to minimize disturbance of the water column.

The following is a general guideline for collecting surface water samples:

1. Set up a staging area and organize sampling equipment near the first (farthest downstream) sampling location. Samples will be collected by continually moving upstream from the initial (or current) location.
2. Observe the direction of surface water flow (if applicable).
3. Assess the area surrounding the sample location to identify potential influences on the water sample or quality. The assessment should look at:
   - Both sides of the stream/river, canal, or estuary, if able
   - The surrounding land surface and land use to 150 feet (50 m) of the bank edge
   - The bank, bank edge, and details about the bank (e.g., erosion, plants, animals, trash, rip rap)
   - The presence of structures that may be in the channel (e,g., dam, culverts, pumping)
   - The last rain date that may impact the water.
4. Measure and record the total depth of the water body at the sample location, if possible.
5. If samples are collected by entering the water (e.g., wading or via boat), samples should be collected on the upgradient or sidegradient side to limit the potential of sediment entering the sample. If sediments are disturbed, wait until the sediment settles.
6. Observe and record the depth of the sample location (i.e., below the water surface).
7. Collect surface water samples with the sample collection method specified in the project work plan.
8. Measure and record the water quality parameters of the sample.
9. Complete the Surface Water Sample Form **(Attachment A)**.
10. Mark the sampling location on a site map or GPS the sample location.
11. Photograph (optional but recommended) and describe each location, and place a numbered stake closest to the sampling location. The photographs and description must be adequate to allow the sampling station to be relocated at a future date, if required.

The following information should be provided in the field logbook or approved field documentation as applicable to the work:

- Sample location information (visual, measured)
- Type of water body (e.g., lake, canal, stream/river, estuary)
- Estimate of surface area of water body, if applicable
- Measurement of water body depth
- Sampler collection method
- Water quality meter equipment type
- GPS coordinates, if required
- Distance of sample collection point from right or left edge of water or embankment in the downstream direction, if applicable
- Details about flow of streams (e.g., no flow, moderate, flooding)
- Lake level details (e.g., high, low)
- Water observations from the bank of sample location (e.g., water odor, color, clarity)

- Details about the surrounding bank and habitation including but not limited to:
  - Bank stability
  - Human Influence (e.g., buildings, farming, industry, piping, riprap)
  - Vegetation
  - Presence or absence of animals
  - Detritus
  - Surface soil or rock type.
- Measured water field parameters (e.g., pH, turbidity, conductivity, temperature, etc.)
- Site conditions (for example, floating oil or debris, gassing).
- Water sampling details
  - Sample identification
  - Date and time of sample collection
  - Sample interval, if required
  - Quality control samples (e.g., duplicates, equipment blanks), if collected
  - Number of samples collected
  - Analytical requirements on sample.
- Equipment decontamination procedures
- Investigative derived waste (IDW) containerization (volume, placement), if applicable
- Disposal of IDW (shipping/transport records or temporary storage details)
- Field observations
- Problems encountered and corrective action.

1.1 Direct Grab Method for Unpreserved and Unfiltered Samples

Procedure Caution: This method can only be performed when preservatives have not been added to sample containers prior to sampling.

Samples from shallow depths can be collected by the direct grab method, which involves submerging the sample container directly into the water body. Procedures for direct grab sampling are as follows:

1. Label the sample bottle for sample identification. Record all applicable information in the field logbook or approved field documentation (see SOP-04 Field Documentation).
2. With minimum surface disturbance, submerge the unpreserved sample bottle with the mouth of the container facing upstream, and allow sample stream to flow gently into the bottle.
3. After sample collection is completed, submerge a water quality monitoring probe at the sampling site and collected water quality measurements (if required). Typically, temperature, dissolved oxygen (DO), oxidation-reduction potential (ORP), pH, electrical conductivity (EC or specific conductance), and turbidity are collected. Additional water quality parameters, such as salinity and total dissolved solids, may be measured if indicated in the project work plan.

1.2 Sample Transfer Method for Preserved Samples

It is prudent to use the sample transfer method when preservatives have been added to sample containers prior to sampling. This method involves the collection of the sample aliquot in a temporary transfer container, and transferring the sample into the primary (laboratory) sampling containers. This transfer container may be disposable or reusable and should be constructed of a nonreactive material, such as glass, stainless steel, or Teflon. Note that special consideration is required in situations where adhesion of a contaminant to the surface of the transfer container (oils and grease) may pose a problem. The sampling device should have a capacity of at least 500 milliliters to minimize the number of times the transfer container is filled, thus reducing agitation to the water body and minimizing disturbance to any sediment

layers. A description of collection devices and procedures that allow for discrete sampling and transferring are included as **Attachment A.**

A carboy, dipper, beaker with pour spout and handle, ladle, ice scooper, pond sampler, or other container constructed of inert material (e.g., glass, stainless steel, or Teflon) can serve as the transfer container depending on the sampling requirements for a given project. Use of a transfer container prevents unnecessary contamination of the outer surface of the sample bottle that might otherwise result from direct immersion of the sample bottle in the water, prevents loss of preservative, and prevents the technician from having to physically contact the sample media. Procedures for the sample transfer method are as follows:

1. Label the sample bottle for sample identification.
2. Care should be taken not to disturb bottom sediments.
3. If a carboy is used to collect large quantities of surface water, fill the carboy to 1/10 capacity and rinse three times with the water to be sampled, prior to sample collection. Rinse water will be discarded downstream or away from the sampling location to avoid surface water agitation. The mouth of the carboy should be facing upstream during sampling.
4. If a pond sampler is used, ensure that the sampling beaker and the bolts and nuts that secure the clamp to the pole are tightened properly. The mouth of the beaker should be facing upstream during sampling.
5. If a dipper or bailer is used, submerge the device with minimal disturbance. The mouth of the container should be facing upstream. Allow the device to fill slowly and continuously.
6. Sample collection will be conducted in accordance with the guidelines in SOP-46 Water Samples for Chemical Analysis. For volatile analysis containers, immediately fill the vials after filling the transfer container to minimize volatilization. Slowly empty the transfer container slowly into the sample bottle, allowing the sample to flow gently into the bottle with minimal disturbance. Completely fill the volatile analysis containers so that no headspace is present.
7. Fill remaining sample containers.
8. If field filtration is required, use a peristaltic pump, silicone tubing, and an in-line filter or similar filtration method (e.g., positive vacuum pump, syringe) to filter the water from the transfer container into the appropriate sample container.
9. After sample collection is completed, submerge a water quality monitoring probe at the sampling site and collected water quality measurements (if required). Typically, temperature, DO, ORP, pH, EC or specific conductance, and turbidity are collected. Additional water quality parameters, such as salinity and total dissolved solids, may be measured if indicated in the project work plan.
10. Depending on the sampling application, the transfer vessel can be either disposed of or reused. If reused, the vessel and any other apparatus will be decontaminated in accordance with SOP-09 Equipment Decontamination, prior to sampling a different source.

2.0 RECORDS

Field notes will be kept in a bound field logbook or approved field documentation following the format specified in SOP-04 Field Documentation. Specific documentation may include health and safety documentation, precipitation data, and photographs. Detailed records will be maintained during investigation activities, particularly with respect to location, depth, color, odor, conditions, and water measurements from field monitoring equipment. Required records include:

- Required site maps and HASP forms
- Instrument calibration
- Surface water sampling data (Form or similar)
  - Location (sketches) and identification
  - Date started/ended at this location
  - Details about the surrounding land and land use
  - Details about and located within the water body
  - Conditions existing at the bank
  - Site conditions (e.g., floating oil or debris, gassing, direction of stream flow)
  - Water condition
  - Description of sampler and equipment
  - Contractor name and equipment used, if applicable
  - Water quality parameter measurements.
- Weather observations (e.g., temperature, wind speed, cloud coverage, approximate wave height)
- Any problems encountered or deviations from this SOP
- Summary of daily activities and personnel onsite.

ATTACHMENT A DEPTH GRAB SAMPLER TYPES

1.0 INTRODUCTION

It is beyond the scope of this SOP to describe all water sampler types available to collect a surface water or liquid sample.

2.0 KEMMERER BOTTLE

A Kemmerer bottle **(Figure 1)** may be used in most situations where site access is from a boat or structure such as a bridge or pier, and where samples at depth may be required. Equipment similar to a Kemmerer bottle is the Niskin samplers.

Sampling procedures using a Kemmerer bottle include:

1. Measure the water column to determine maximum depth and sampling depth prior to lowering the sampling device.
2. Mark the line attached to the sampler with depth increments so sampling depths can be recorded.
3. Set the sampling device so the sampling end pieces (upper and lower stoppers) are pulled away from the sampling tube (body), allowing the substance to be sampled to pass through this tube.
4. Lower the pre-set sampling device to the predetermined depth. Avoid bottom disturbance.
5. When the Kemmerer bottle is at the required depth, send the messenger weight down to trip the closure mechanism and close the sampler.
6. Retrieve the sampler and discharge from the bottom drain the first 10-20 mL to clear any potential contamination of the valve.
7. Transfer the sample to the appropriate sample container.

Figure 1 Kemmerer Sampler

2.1 Van Dorn Bottle Sampler

The Van Dorn bottles provide a means of obtaining water samples at selected depths below the surface and are similar to the Kemmerer sampler. The Van Dorn bottle consists of an open-ended clear plastic cylinder that can be attached to the hydrographic wire (the steel wire wound on the winch) and lowered to any desired depth. The bottles also provide a platform to which thermometers can be attached to record the temperature of the water at the location of each Van Dorn bottle.

Van Dorn bottles come in transparent acrylic or opaque PVC. PVC is more durable and less costly; however, acrylic allows the sampler to view the bottle contents immediately. The Van Dorn bottle usually comes as a horizontal or vertical bottle **(Figure 2)**.

- The horizontal Van Dorn bottle descends parallel to the bottom and is ideal for sampling various stratification levels, the thermocline or just above the bottom sediments. The horizontal bottle is not suitable for chemical analysis of contents due to possible cross contamination (i.e., by mercury and phosphorus) from the materials used in the units construction.

- The vertical Van Dorn is the preferred method for sampling standing crops, primary productivity and other quantitative measures, because its design allows free water flow through the bottle. The trigger mechanisms of bottles of this type are, by design, very sensitive. Avoid rough handling and lower the sampler carefully into the water without dropping it.

Figure 2 A Horizontal Van Dorn Bottle in Open and Closed Positions and a Vertical Van Dorn Bottle

Procedures for deploying a Van Dorn bottle are as follows:

1. Measure the water column to determine maximum depth and sampling depth prior to lowering the sampling device.
2. Mark the line attached to the sampler with depth increments so sampling depths can be recorded.
3. Set the sampling device so the sampling end pieces (upper and lower stoppers) are pulled away from the sampling tube (body), allowing the substance to be sampled to pass through this tube.
4. Attach the Van Dorn bottle to the line or winch line with the covers pulled out and twisted back and around to the side. Lowering the sampler into the water is called making a “cast:,
5. Temporarily attach a safety line to the bottle to prevent accidental loss of the bottle should it be dropped while attaching it to the wire. Remove the safety line once the bottle is secured to the line.
6. If deploying the unit from a boat, the deckhand will release the brake on the winch, lowering the bottle into the water.
7. If two or more Van Dorn bottles are attached to the winch, the Van Dorn bottles are attached to the same line and lowered to different pre-selected depths. If collection of water samples are near the bottom or below the surface, the lower bottle is lowered to a depth of 2 to 3 feet (1.0 to 1.5 meters) above the bottom and the upper bottle is 1.0 to 1.5 meters below the surface.
8. The bottle (or bottles) is lowered to a pre-selected depth.
9. If thermometers are attached to the inside of the bottle, the bottle is left there until the thermometers attached inside come to thermal equilibrium with the water at that depth.
10. When it is determined to retrieve the sampler, a metal weight called a "messenger" is sent down the wire to tripper the closing of the bottle and seals the sample in the bottle.
11. When using multiple bottles, a messenger is attached below the upper bottle or below each of the bottle except the lower bottle. The "messenger" is dropped down the wire and when the weight hits the catch on the upper Van Dorn bottle, the catch releases the rubber end covers. The two ends snap around and seal off the ends. The other "messenger" then travels down the winch line to the lower Van Dorn bottle causing it to trip and seal the water sample in the next bottle.
12. The bottle or bottles are then retrieved to the surface and removed from the winch line.
13. Record the temperature and transfer the sample to the appropriate sample container.

2.2 Bacon Bomb or Zone Sampler

A Bacon Bomb Sampler (Bomb Sampler) **(Figure 3)** is a water sampling device used in most situations where site access is from a boat or structure such as a bridge or pier, and where samples at depth are required. Sampling procedures are as follows:

1. Lower a properly decontaminated bacon bomb sampler carefully to the desired depth, allowing the line for the trigger to remain slack at all times. The plunger opens to admit the sample when bomb is lowered to the bottom or when plunger is released at any desired level and the trigger line is pulled.
2. Allow the sampler to fill. The plunger will seal tight when the bomb is withdrawn.
3. Release the trigger line and retrieve the sampler.
4. Discharge from the bottom drain the first 10-20 ml to clear any potential contamination of the valve.
5. Transfer the sample to the appropriate sample container by pulling up on the trigger.

Figure 3 Bacon Bomb Sampler and a Zone Sampler

2.3 Dip Sampler

A dip sampler **(Figure 4)** is useful in situations where a sample may need to be recovered from an outfall pipe, along a stream bank, or where direct access is limited. The long handle on the device allows access from a discrete location. Sampling procedures are as follows:

1. Assemble the device in accordance with the manufacturer's instructions.
2. Extend the device to the sample location and collect the sample by dipping the sampler into the water or substance.
3. Retrieve the sampler and transfer the sample to the appropriate sample container.

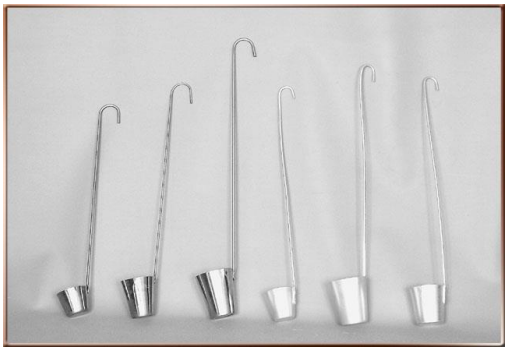

Figure 4 Examples of Dip Samplers

2.4 Peristaltic Pump

The peristaltic pump can collect samples from depth, as well as samples collected from the surface. A peristaltic pump may be used in most situations where site access is from a boat, samples from a certain depth, or a sweep of the width of narrow streams is required. Sampling procedures are as follows:

1. Install new silicone tubing in the peristaltic pump head, as per the manufacturing instructions. Allow sufficient tubing on the discharge side of the pump for filling sample containers but only enough on the suction side for attachment to the intake line.
2. Select the length of suction intake tubing necessary to reach the required depth and attach the tubing to intake side of the pump. Weight may need to be added as necessary to lower the tubing intake to the desired depth.
3. Position the suction intake tube to the required depth and begin pumping at a slow flow rate to minimize material agitation.
4. Fill the appropriate sample bottles from the tubing outlet.

Using a peristaltic pump with tubing may not be a preferred method when weather conditions could cause icing in the tubing.

EHS Support
consider it done

SURFACE WATER SAMPLING FORM

Project Name: _____

Project Number: _____

Depth of Water Body: _____ ft

Water Body Type: ☐ Lake ☐ Canal ☐ River/Stream

☐ Estuary Other: _____

Width of Water Body: _____ ft

Flood Stage Depth (if applicable): _____ ft

Coordinates: _____

Sample or Station Identification: _____

Sample Date: _____

Field Technician(s): _____

Weather Conditions: _____

Sample Collection Method: ☐ Grab ☐ Dipper ☐ Van Dorn

☐ Kemmerer Other: _____

Water Quality Meter Equipment: _____

Was last rain within 48 hours? ☐ Yes ☐ No

Sample Collection Depth: _____ ft

Stream Flow: ☐ No Flow ☐ Low ☐ Moderate ☐ High ☐ Flood

Visual Estimation of Stream Flow: _____ ft^3/sec

Lake Level: ☐ Low ☐ Normal ☐ High

Bank Stability: ☐ Eroded ☐ Vulnerable ☐ Stable

Air Temperature: _____ °F / °C

Water Odor: _____

Visual Water Clarity: _____

Water Color: _____

View of water color and clarity from shoreline.
Clear indicates clear to bottom.
Cloudy indicates can see up to 4 inches below water surface.
Turbid indicates cannot see more than 1 inch into water.

Time	Temp.	pH	Conductivity	Turbidity	DO	ORP	Salinity	Comments
	°C / °F	S.U.	__S/cm	NTU	mg/L	mV	ppth	

Comments: _____

SAMPLE ID	TIME	ANALYSES	QA/QC SAMPLE	REMARKS

Human Influence Observations near Sample Location												
Assess 30 ft (10 m) upgradient and downgradient of sample location	Left Bank *				Channel		Right Bank			
Walls/Rip Rap/Dams	P	C	B	0	Y	N	P	C	B	0
Buildings	P	C	B	0	Y	N	P	C	B	0
Pavement/Cleared Lots	P	C	B	0			P	C	B	0
Road/Railroad	P	C	B	0	Y	N	P	C	B	0
Bridges/Abutments	P	C	B	0	Y	N	P	C	B	0
Pipes or Culverts (Inlet/Outlet)	P	C	B	0	Y	N	P	C	B	0
Landfill/Trash	P	C	B	0	Y	N	P	C	B	0
Park/Lawn	P	C	B	0			P	C	B	0
Row Crop	P	C	B	0			P	C	B	0
Pature/Range Land	P	C	B	0			P	C	B	0
Orchards/Vinyards	P	C	B	0			P	C	B	0
Logging Operation	P	C	B	0			P	C	B	0
Mining Activity	P	C	B	0	Y	N	P	C	B	0
Vegetation Management	P	C	B	0			P	C	B	0
	P	C	B	0			P	C	B	0
	P	C	B	0	Y	N	P	C	B	0

* Look downstream. The left bank is on your left, right bank is on right.

0 - Not present C - Between bank and 10 m of Channel

B - On Bank P - > 10 m and 50 m (150 ft) of Channel

Other	Present	Notes (Quantity, %, etc.)
Fish	Y N	
Water Fowl	Y N	
Crayfish	Y N	
Amphibians	Y N	
Rocks or Gravel	Y N	
Sand	Y N	
Silt or Mud	Y N	
Algae	Y N	
Leaves (thick mas)	Y N	
Organic matter (thick)	Y N	
Macrophytes	Y N	
Roots	Y N	
Oily Surface	Y N	
Salt Crusts	Y N	
	Y N	
	Y N	

Signature: _____

SEDIMENT SAMPLING

PURPOSE

The purpose of this SOP is to describe the sampling of sediment in shallow and deep waters. The procedures are generic in nature and may be modified to meet the constraints presented by site conditions and equipment limitations. For the purposes of this procedure, sediments are considered solids that are situated beneath an aqueous layer. It is beyond the scope of this SOP to describe procedures for collecting sediment sampling for all equipment types.

Safety Precaution: When working near the edges of water bodies, adequate precautions must be taken to ensure the safety of sampling personnel. The sampling team member should not get too close to the edge of the water body as where bank failure may pose a risk to sampling personnel. The person performing the sampling should be on a lifeline and be wearing appropriate personal protective equipment (e.g., personal floatation device). When conducting sampling from a boat, appropriate boating safety procedures should be followed.

When sediment sampling greater than six inches deep is required, the appropriate subsurface utility locate (the state one call number) will be notified. Factors, such as safe access and handling, and adverse weather conditions will influence sample acquisition.

Relevant EHS Support SOPs

- SOP-04 Field Documentation
- SOP-05:Sample Management and Shipping
- SOP-08:Field Equipment Operation and Calibration
- SOP-09 Equipment Decontamination
- SOP-24 Hand Auger
- SOP-30 Field Classification and Description of Soil.

Attachments

- Attachment A: Sediment Sampler Types

Required Materials

- Field logbook and field documentation
- Site maps, site layouts, site plans
- Health and Safety Plan (HASP)
- Appropriate personal protective equipment (PPE)
- Black waterproof and/or indelible ink pens
- Safety equipment (including personal floatation device and lifeline, waders (if required)
- Measuring equipment (tape, water level indicator)
- GPS
- Camera
- Decontamination supplies
- Appropriate sample containers, sampling kits, labels, coolers, ice, Chain of Custody forms, tape, plastic baggies
- Duct tape and wrapping tape
- Soil logging charts, Munsell soil color charts
- Sediment collection equipment.

1.0 GENERAL SEDIMENT SAMPLING PROCEDURES

Sediment samples can be collected using a variety of methods and equipment, depending on the depth of the aqueous layer, the portion of the sediment profile required (surface vs. subsurface), the type of sample required (disturbed vs. undisturbed), the presence of contamination, and sediment type. Care should be taken when selecting equipment and designing the sampling approach to ensure that representative samples are collected.

Actual sampling locations will be confirmed in the field prior to initiation of the sampling program. Samplers should anticipate accommodating in-field adjustments. When surface water and sediment samples are required from the same location, water samples will be collected first.

Use care to the best extent practicable when employing this procedure to avoid disturbing the sediment. When possible, sample the downstream locations first, moving on to the upstream locations so that sediment disturbance related to sampling does not affect the sample quality.

Record all applicable information in the field logbook or approved field documentation, and label samples in accordance with the project work plan or as describe in SOP-04 Field Documentation. Sample management and shipping will be completed in accordance with SOP-5 Sample Management and Shipping. If field equipment (e.g., photo-ionization detector) is required during the monitoring event, the equipment will be calibrated (SOP-08 Field Equipment Operation and Calibration). Decontamination procedures are provided in SOP-09 Equipment Decontamination. Mark the sampling location on a site map and obtain its coordinates (using GPS, or equivalent), if applicable.

Photographs (optional, but recommended) can aid in providing visual cues or sample description. The photographs and description should provide enough detail to allow the sampling station to be located, if required, at a future date.

1.1 On-Shore Method (Shallow Water) – Manual Sampling

For the intent of this procedure, surface sediment depth is considered less than 1.5 feet deep, in waters less than 2 feet deep (a depth that is considered safe to wade).

1.1.1 Hand Equipment (Shovel, Trowel, Spade)

Shallow sediments (< 12 inches in depth) can be collected with a spade, shovel, trowel, or scoop. This method of sediment collection is best performed in shallow, slow-moving water. Deep and/or rapidly flowing water render this method less accurate than other methods.

The following procedure will be used to collect sediment with a scoop, shovel, or trowel:

1. Clear the sample location of any surface debris.
2. Using a decontaminated sampling implement, remove the desired thickness and volume of sediment from the sampling location.
3. If quantity of sediment is required, remove twigs, roots, leaves, rocks, and miscellaneous debris from the sample.
4. Transfer the sample into an appropriate labeled sample container.
5. Carefully decant the surface water from the sample container prior to sealing.
6. Log the sediment sample according to the Unified Soil Classification System (USCS). Soil classification is detailed in SOP-30 Field Classification and Description of Soil.
7. Decontaminate the equipment in preparation for use at the next sample location.

1.1.2 Bucket or Tube Auger

Sediments collected up to 24 inches in depth can be undertaken using a bucket auger or tube auger. Hand auger procedures are outlined in SOP-24 Hand Auger. This method is best performed in shallow, slow-moving water.

The following procedure will be undertaken to collect sediment samples with a bucket auger or tube auger:

1. Clear the sample location of any surface debris
2. An acetate sleeve may be inserted into the bucket auger or tube auger, if required or requested. Collection in an acetate sleeve will enable the extraction of an intact core.
3. Using a decontaminated sampling implement, advance the auger into the sediment at a 0° to 20° angle from vertical. This angle minimizes the spillage of the sample from the device upon extraction from the sediment and water.
4. Rotate the auger to cut a core of sediment.
5. Slowly withdraw the auger. If using a tube auger, make sure the slot is facing upward. If a sample is required from the 0 to 0.5-foot bgs depth, transfer the sample or specified aliquot of sample into an appropriately labeled sample container.
6. If sampling continues past 0.5 feet, a series of auguring, extraction and removal of sediments from the bucket will commence. Cuttings should be properly disposed to minimize the risk of cross-contamination.
7. Once the target depth has been reached, the auger will be carefully removed. If required, replace the bucket auger bit with a tube auger bit to collect the representative sample.
8. Discard approximately one inch of sediment from the top of the auger.
9. Transfer the sample into the appropriately labeled sample container.
10. Log the sediment sample according to the Unified Soil Classification System (USCS). Soil classification is detailed in SOP-30 Field Classification and Description of Soil.
11. Decontaminate the equipment in preparation for use at the next sample location.

1.2 Off-Shore Method (Deep Water) – Mechanical Samplers

Sediments collected from deep water (greater than 2 feet deep) or from a boat or platform are generally collected using a mechanical sampler. Collection is usually accomplished using a spring-loaded dredging device, a gravity core sampler, or similar.

1.2.1 Dredging

Collection of surface sediment can be accomplished with a system consisting of a remotely-activated device (dredge) and a deployment system. A description of collection devices and procedures that allow for sediment sampling are included as **Attachment A.** The dredging process generally can be described as:

1) Lower a decontaminated sampling device (dredge) to the surface of the sediment sample location by use of a rope, cable, or extended handle.
2) Activate the dredging mechanism by deploying a messenger down the line, or by depressing the button on the upper end of the extension handle.
3) Once the device is tripped, the sampling device entraps sediment in the spring loaded or lever operated jaws of the mechanism.
4) Retrieve the dredge device and sediment sample to the surface by slowly raising the rope, cable, or extended handle.
5) Slowly decant/drain any free liquid through the top of the sampler, while retaining the fine sediment fraction in the sampler.

6) Transfer the sediment sample into the appropriately labeled sample container.
7) Log the sediment sample according to the Unified Soil Classification System (USCS). Soil classification is detailed in SOP-30 Field Classification and Description of Soil.
8) Decontaminate the equipment in preparation for use at the next sample location, if required.

1.2.2 Core Samplers

Core samplers are recommended whenever sampling to depths below the water surface is required, or when the identification of target analytes by depth is a sampling objective. Core samplers are basically tubes or augers that are inserted into the sediment or soil by various means to obtain a cylinder or box sample of material at known depths. Core samplers can be simple, hand-operated devices, or they can be large, costly, motor-driven mechanisms that can collect samples from great depths below the water surface. There are several types of corers including tube corers, augers, piston corers, vibracore samplers, split-spoon core samplers, and box core samplers. An example of a piston corer is shown as **Figure 1**. General procedures for collecting a sediment sample using a vibrocore sampler is included as **Attachment A**. The general procedures for corer samples include:

1. Assemble the decontaminated coring device and insert a new ("clean") acetate core into the sampling tube.
2. Insert the check valve into the lower end of the sampling tube, with the convex surface positioned inside the acetate core.
3. Screw the nosecone onto the lower end of the sampling tube, securing the acetate tube and check valve.
4. Place the sampler in a position perpendicular to the sediment to be sampled.
5. If the "T" handle is used, place downward pressure on the device until the targeted sample depth is reached. At that point, rotate the sampler to shear off the core at the bottom. Slowly withdraw the samples from the sediment and proceed to Step 16.
6. If the drive hammer is used, insert the tapered handle (drive head) of the drive hammer through the drive head.
7. Drive the sampler into the sediment to the targeted depth.
8. Record the length of the tube that penetrated the sample material.
9. Record the number of blows required to obtain the targeted depth, if applicable.
10. Remove the drive hammer and fit the keyhole-like opening on the flat side of the hammer onto the drive head. In this position, the hammer serves as a handle for the sampler.
11. Rotate the sampler to shear off the core at the bottom.
12. Lower the sampler handle (hammer) until it just clears the two ear-like protrusions on the drive head and rotate about 90°.
13. Slowly withdraw the sampler from the sediment. If the drive head was used, pull the hammer upwards and dislodge the sampler from the sediment.
14. Carefully remove the coring device from the water.
15. Unscrew the nosecone and remove the check valve.
16. Slide the acetate core out of the sampler tube. Slowly decant/ drain any free liquid from the sampler. Try to retain the fine sediment fraction during this process.
    A. If headspace is noted in the upper end, a hacksaw may be used to shear the acetate tube off at the sediment surface. The acetate tube will be capped at each end.
    B. Dry off the outside of the acetate sleeve and using a waterproof marker, indicate the appropriate orientation (using an "up arrow") of the sediment core, and recovery (if applicable). Write the sample ID, date and time of sample collection, either on a sample label or on the outside of the sampler.
    C. Cap each end of the sampler with covers and duct tape the caps to the acetate core sampler.

D. The sample may be kept in this "container", or transferred to an appropriately labeled sample container.

17. Log the sediment sample according to the Unified Soil Classification System (USCS). Soil classification is detailed in SOP-30 Field Classification and Description of Soil.
18. Decontaminate re-useable equipment in preparation for use at the next sample location.

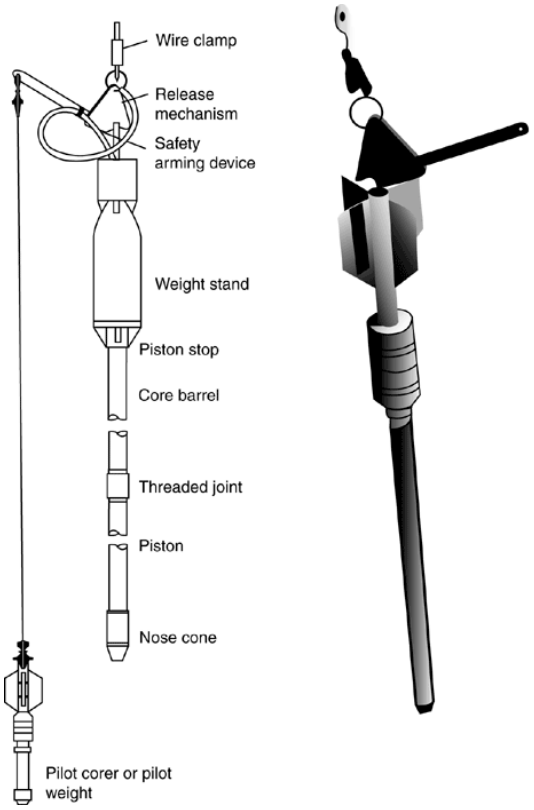

Figure 1: Example of Piston Corer Sediment Sampler

2.0 RECORDS

Field notes will be kept in a bound field logbook or approved field documentation following the format specified in SOP-04 Field Documentation. Specific documentation may include health and safety documentation, precipitation data, and photographs. Detailed records will be maintained during investigation activities, particularly with respect to location, depth, color, odor, conditions, and water measurements from field monitoring equipment. Required records include:

- Required site maps and HASP forms
- Instrument calibration
- Sediment water sampling data
  - Description of location (sketches) and identification and photographs
  - Distance of sample location from right or left edge or water or embankment
  - GPS coordinates, if required
  - Estimated water depth
  - Date started/ended at this location
  - Sediment soil description (refer to SOP-30)
  - Conditions existing at the bank
  - Site conditions (e.g., floating oil or debris, gassing, direction of stream flow)
  - Water condition
  - Description of sampler and equipment
  - Contractor name and equipment used, if applicable
  - Water quality parameter measurements.
- Weather observations (e.g., temperature, wind speed, cloud coverage, approximate wave height)
- Any problems encountered or deviations from this SOP
- Summary of daily activities and personnel onsite.

MECHANICAL SEDIMENT SAMPLING DEVICES

1.1 Ekman and Ponar Dredge

An Ekman dredge employs spring-activated jaws and is used to collect moderately consolidated, fine-textured sediment. A Ponar dredge is a heavyweight sediment sampling device with weighted jaws that are either lever- or spring-activated. This approach is appropriate in collecting consolidated fine to coarse textured sediment. The procedure for using the specific dredge is as follows:

1) Attach a sturdy nylon rope or stainless steel cable to the top of the bracket or secure the extension handle to the bracket with machine bolts.
2) Attach the springs to both sides of the jaws. Set the jaws so that they are open by placing the trip cables over the release studs. Ensure that the hinged doors on the dredge top are free to open.
3) Lower the sampler to a point approximately 2 to 6 inches above the sediment surface.
4) Drop the sampler onto the sediment.
5) Trigger the jaw release mechanism in the Ekman dredge equipment by lowering a messenger down the line or by pressing the button on the upper end of the extension handle.
6) In the Ponar dredge, slack on the line will release the trip bar or spring loaded pin; pull up sharply on the line closing the dredge.
7) Raise the sampler and slowly decant/ drain any free liquid through the top of the sampler. Try to retain the fine sediment fraction during this process.

Figure 1: An Ekman Dredge (left) and a Ponar Dredge (Right)

1.2 Collection of Sediment Samples using a Vibracore

The following are general procedures for collection of sediment samples via vibracore.

1) Maneuver the sampling vessel to the target sample location. Secure the vessel in place using spuds, anchors, or tie lines.
2) Measure the total depth of water using a surveyor's rod to the nearest 0.1 foot, and record the water surface elevation with a GPS, if available.
3) Obtain the sediment depth by manually probing with a 5/8-inch outside diameter calibrated steel pipe into the sediment as far as possible using reasonable human force 3 to 5 feet away from the target location. The depth of refusal will be interpreted as the interface between soft sediment and rock or stiff bottom.
4) Record sediment depth, type, and presence of debris or obstructions in the field book.
5) Once the targeted area is considered suitable for core collection, begin to construct the vibracore sampler.
6) Mount a clean coring tube into the vibracoring device.

7) Lower the coring apparatus, tube end first, with the core tube attached vertically through the water column until it is just above the top of sediment.
8) Vibrate the core to refusal.
9) Measure and record the depth of core tube penetration into the sediments in the field book or appropriate field documentation.
10) Pull the apparatus upward out of the river or lake bottom (using a winch), and raise it to the surface, while maintaining the core in a vertical position.
11) Before the bottom of the tube breaks the water surface and while still submerged, place a cap over the bottom end of the tube to prevent loss of sediment from the core tube. Secure the cap in place with duct tape when brought onboard the vessel.
12) Water overlying the core tube in the coring apparatus will be allowed to drain prior to removal of the core tube.
13) Estimate the recovered length of the sediment core and note in the field notebook. The length of the cores recovered in aluminum tubing will be determined directly by lowering a clean aluminum-measuring device into the top of the tube. The distance to the top of the sediment in the core tube will be subtracted from the total tube length for a recovered sediment length.
14) Compare the length of the recovered core with the core penetration depth.

    a) If the recovered length of the sediment core is more than 60% of the penetration depth, keep the core.
    b) If insufficient amount of material is recovered, set the intact core tube aside for potential future use, and perform the following steps as necessary.

        - An additional attempt will be made at a minimum distance of 2 feet from the previously attempted location.
        - A maximum of three attempts to collect a core will be made for a given location.
        - If all three attempts to collect a core are unsuccessful based on recovery alone (i.e., less than 60% recovery), retain the core with greatest recovery for analysis and indicate that the targeted recovery was not achieved (dispose other cores).

1) After successful core recovery enter additional information into the field notes: date; time of recovery; sample position; water depth (feet) and water surface elevation; core penetration depth (feet); core recovery depth (feet); and observations, including probing results.
2) Remove the core tube from the vibracore device and place a second cap on the top of the core tube. As necessary, and while keeping the core upright, use a pipe cutter (or other appropriate device) to make a horizontal cut in the core tube approximately one inch above the sediment. Secure the cap in place with duct tape. Rinse the outside of the core tube with a small amount of river or lake water.
3) Draw an arrow on the core tube or write “top” on the core tube with permanent marker to mark the top of the core. Label the core with permanent marker indicating location/ station ID, date, and time.
4) Store the core vertically while on the vessel and transport to the processing area.
5) Upon delivery of the cores to the processing area, measure the recovered sediment in the core tube and begin draining the overlying water by drilling a hole just above the sediment interface.
6) Prepare a clean set of disposable aluminum pans for sectioned core segments. Mark each container with location and sample depth.
7) Due to the potential for soft/loose surface sediment, the upper sections (to one foot depth) may be sectioned, as necessary, using a pipe cutter (or other appropriate device) with the core left in a vertical position. Each of these sections will be carefully transferred into a disposable aluminum pan.

8) For lower sample sections, the core tube will be placed in a horizontal position and electric shears will be utilized to cut the tube lengthwise to expose the full intact core.
9) Physical descriptions of each core will be recorded and changes in stratigraphy noted. Characteristics include the general soil type based on the Unified Soil Classification System (refer SOP-30), approximate grain size presence of observable biota, odor, and color. Obtain photographs of the sediments as possible.
10) Remove representative samples based on the designated segmentation scheme.
11) Homogenize samples in a disposable aluminum pan as necessary.
12) Place homogenized sample in appropriate sample containers and cap.
13) Record required information on the appropriate forms and/or field notebook.

Figure 2: Image of one type of vibracore equipment

SURFACE WATER GAUGING

PURPOSE

This SOP provides personnel procedures to measuring surface water using non-recording gauges and installing surface water gauging devices (i.e., staff gauge, simple stilling well). This SOP will not provide stilling well installation requiring heavy equipment or drill rigs or use of surface water gauging using a recording device.

Includes staff gauge installation and stilling well.

SAFETY PRECAUTION: When working near the edges of water bodies, adequate precautions must be taken to ensure the safety of sampling personnel. For example, the sampling team member should use caution when approaching and working at the edge of the water body, where bank failure may pose a risk to sampling personnel. The person performing the task may be required to be on a lifeline and/or wearing appropriate personal protective equipment (e.g., personal floatation device). Factors such as safe access, water temperature, flooding, and bad weather may influence acquisition and should be discussed with the project team.

Relevant EHS Support SOPs

- SOP-02 Site Visit and Reconnaissance
- SOP-03 Utility Clearance
- SOP-04 Field Documentation
- SOP-06 Pre-field Mobilization

Attachments

- Attachment A Fluid Level Monitoring Forms

Required Materials

- Field logbook and field documentation
- Site plan showing measurement locations
- Health and Safety Plan (HASP)
- Personal protective equipment, including a personal floatation device, if required
- Indelible ink pens and waterproof marking pen
- Fluid measurement device (e.g., water level indicator)
- Extra batteries
- Paper towels and trash bags
- Decontamination supplies
- Post driver or rubber mallet
- Drill, drill bit capable of drilling into concrete or steel
- Information about the previous well gauging data, if available.

1.0 GENERAL SURFACE WATER GAUGING GUIDELINES

Surface water gauging provide a quick and easy indicator of water level and flow associated with a surface water body. Surface water bodies are generally connected to groundwater. A simple method of recording surface water level is using a drop-down tape, a staff gauge, or via a still well (nonrecording gauges). Staff gauges are read directly whereas the other two types are read by measurement to the water surface from a fixed point. Nonrecording gauges serve several purposes including:

1. A reference gauge (at nonrecording water quality stations).
2. Monitoring the rise/fall of a surface water body over time.
3. Can be more practical or feasible than a recording gauge.
4. Inexpensive screening tool to evaluate best location for recording gauges in watershed or aquifer specific studies.

Establishing Gauge Datum Caution: The stage or water surface level are referenced to a common datum. Movement of the structures or measuring points can disturb the reference and result in inaccurate water elvations. Periodic surveys should be conducted to check the relative position of the gauge location against reference marks of a known elevation. Surveys should be run at a minimum of every 3 years on surface water gauges that may be disturbed (e.g., moving water, ice, structures). Surveys should be re-conducted if there are unresolved discrepancies between gauge observations or movement of gauge structures, reference marks, or reference points is suspected.

1.1 Tapedown Locations

Tapedown gauges are the easiest and least expensive gauges to install, measure, and maintain. Accuracy and precision (measuring to 0.01 foot or 5 mm) are normally lower than other nonrecording methods due to: 1) placement of the mark, 2) the tape is often not vertical due to winds and/or the lip of the bridge deck, 3) susceptibility of marks and pins to movement, and 4) vandalism.

The gauge point is placed directly in a wing wall, pier, overhead structure. Various methods can be used to create a reference point.

1) The chiseled arrow can be marked onto a bridge wingwall or deck on the downstream side over a main channel. The mark should be elevated, if possible, as well as labeled and painted. The mark should be free of any obstructions below the mark and in an area readily accessible by personnel. When placing marks in concrete, avoid scaling concrete. Because of the solid surface of angle or tubular iron, these often work best in steel bridges.
2) Steel pins can be installed in a defined surface. Pins are installed by placing an anchor, bolt, or nail into the bridge wingwall or pier on the downstream side over the main channel. They should be of sufficient length and set deeply enough to remain firmly fixed in place. Tapedown should be free of any obstructions below the pin and in an area readily accessible by personnel.

Following the installation of the tapedown gauge point, the location should be surveyed for position and elevation.

1.2 Staff Gauge

A vertical standing staff gauge is a singular or a successive series of porcelain enameled steel plates mounted to a secure structure. Staff gauge observations are recorded to 0.01 feet or 5 mm resolution. The staff gauge can start at whatever number is desired. Enameled iron gauges are preferred over other type

gauges (such as painted gauges) since they resist rust, corrosion, or discoloration and will last almost indefinitely with proper installation and maintenance. Any algae, organic/marine growth or other dirt build up on the gauge is easily washed off. **Figure 1** shows examples of various porcelain enameled steel plates.

Figure 1: Examples of Staff Gauges

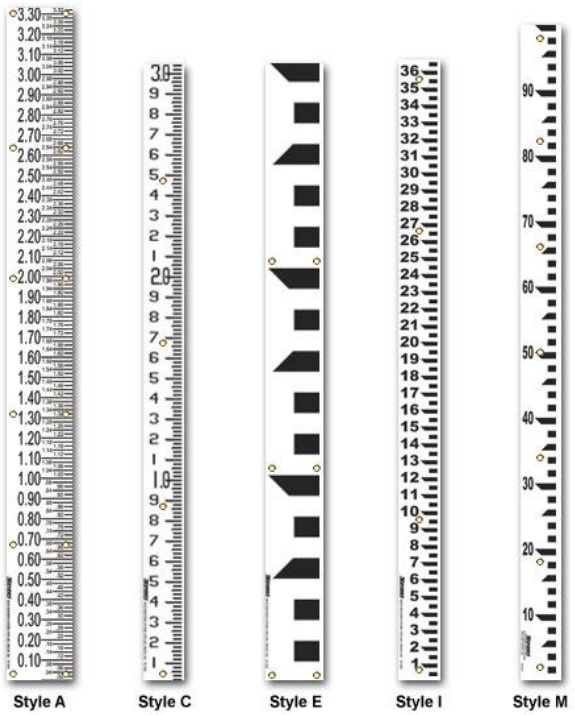

Staff Gauge Placement Consideration:

- Gauges should not be placed in a stream section regulated by different controls, as channel dynamics. and geometry are not the same. Stage fluctuates at different rates and magnitudes relative to changes in discharge.
- A good location is where the post will be in the water during lower water years and where it won't be overtopped during high water years.
- Avoid placing the staff gauge in a location where the water pools or is very slow moving, because sediments will collect around the base of the staff gauge and affect readings.
- If there is a permanent structure such as a dock or bridge near the desired staff gauge location, the gauge can be attached to that structure instead of using a fence post driven into the stream or lake bed.
- If it is desired to tie the staff gauge into a given elevation marker, place the staff gauge near the existing benchmark (place of established elevation) for ease of surveying.

1.2.1 Placing a Staff Gauge

1) The guidelines provided in SOP-02 Site Visit and Reconnaissance and SOP-06 Pre-Field Mobilization should be considered in order to prepare for investigation activities.
2) Staff gauge locations should be surveyed and staked, if the staff gauge is to penetrate into the subsurface. The State One-Call Utility locate service will be notified for any subsurface work. Utility clearance will be conducted in accordance with the procedures outlined in SOP-03 Utility

Clearance. If the staff gauge is placed onto an existing structure, the Utility Clearance may not be required.

3) Depending on the conditions and the staff gauge type, the gauge (only) might be able to be manually pushed or gently advanced using a rubber mallet into soft sediments. This is not recommended due to lack of support to the gauge and potential damage to the gauge.
4) Strength and support can be given to the staff gauge by attaching the gauge to a supporting form. If using a wood product, the staff gauge is typically placed on a redwood, cypress, cedar, or synthetic board of suitable width and the board itself is then attached or embedded to the wall or advanced into the sediment.
5) Wire or bolt the gauge plate to the support at a height where it will show the full range of stages for the reach.
6) Set the upper extent of the staff gauge with reference to the observed elevations for bankfull and flood stages.
7) Position the gaugeplate so the full range of stream stages register.
8) Plan to drive the supported staff gauge using a fence post or pipe so it will stay stable through high water or bad weather. If using a fence post driver, only fasten the gauge to the post using one bolt and let the board rest perpendicular to the post. This will allow the top part of the post to be pounded with the fence post driver. Once the post is set, refasten the board onto the post.
9) Drive the steel sign post, fence post, or pipe vertically into the stream bed or surface water body. In streambeds where boulders make this impossible, look for a vertical face on a large boulder, drill holes in the rock, and attach the gauge plate with expansion bolts.
10) A staff gauge can be mounted directly to concrete or metal structures, if approved, but care should be taken so that the mounting screws are not excessively tightened since this could chip or fracture the porcelain.
11) Chipping can be mitigated by using rubber grommets immediately under the screw head before installing the gauge. Most staff gauges include pre-drilled mounting holes with a brass grommet ring to help avoid any porcelain chipping or fracturing from over tightening.
12) When surveying (levelling) the staff gauge, it is imperative to note the elevation location relative to the marking on the staff gauge. The survey point is generally the top of the staff gauge and the top of the staff gauge may not be the zero mark of the staff gauge.

1.2.2 Reading the Staff Gauge

- The staff gauge is calibrated by referencing the numbered height on the gauge to the surveyed elevation of the water surface and its associated flow.
- In many locations, the water level may surge against the staff gauge structure, causing the water surface to fluctuate or bounce on the staff gauge. If the water level is fluctuating on the staff, read the average level and note the reading with the range of water level fluctuation (uncertainty) e.g., 4.16 +/-0.04, where 4.16 is the average of the peaks and troughs of the waves and +/- 0.04 is the range of the peaks and troughs.
- Take the necessary time to obtain the most accurate observation. It is important to record the uncertainty of the observation for future analysis.
- Record the date, time, the staff gauge observation, and the uncertainty on the field logbook or appropriate discharge measurement form.

1.3 Stilling Wells

Stilling wells are used to provide physical protection for instrumentation and to “still” any wave turbulence where measurements need to be taken. Stilling wells consist of a vertical pipe or tube, which fills to the same level as the body of water being measured, by hydrostatic forces. It may simply be a pipe which is

suspended in the water for obtaining surface water level. In other cases, piping may connect a stilling well to a body of water, which is some distance away or include recording equipment.

The size of the stilling well depends on the method used to measure the head. The diameter generally ranges from a recommended minimum size of 4 inches (100 mm) to 18 inches (45 cm) to accommodate larger diameter floats. (Installation of the larger diameter stilling wells is not included in this SOP). The wells may need to be tall enough to provide convenient access to recorders for reading, reference setting, and maintenance. **Figure 2** shows examples of various types of stilling wells.

Figure 2. Examples of Stilling Wells

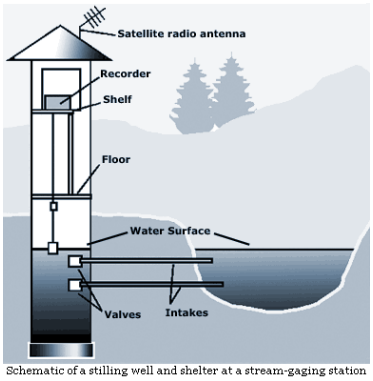

Schematic of a stilling well and shelter at a stream-gaging station

The intake pipes on most stilling wells require occasional cleaning, especially on streams and canals carrying sediment.

Slots or perforations are a must on any stilling well used for level gauging, independent of whether it is by manual or automatic means. If a stilling well is not slotted or perforated, water, sediment, or debris may be pushed in from the bottom and may misrepresent the actual water level.

To construct a simple stilling well:

1. Use Schedule 40 PVC or other inert pipe (to withstand UV in an outdoor environment and not react with water chemistry).
2. A determined manufactured length of perforated PVC casing can be used. If perforated PVC is unavailable, drill ¼-inch (5 mm) drill holes through Schedule 40 PVC casing. It is recommended

to drill 8 rows of drill holes spaced about 2 inches (50 mm) apart across the lower 2-foot (1.5 m) length of PVC (the portion in the water).

3. Place the pipe as vertical as possible and ensure the bottom of the stilling well extends into the water.
4. If the pipe or any supporting structure is expected to extend into sediments (below grade), utility clearance will need to be obtained. Utility clearance will be conducted in accordance with the guidelines provided in SOP-03 Utility Clearance.
5. Position the stilling well so the full range of stream stages register.
6. If the pipe is being supported by an already existing structure (e.g., pole, pier, bridge piling), mount the pipe using brackets, metal straps, or the best means possible for your application, to ensure the stilling well will stay in place and not move from the vertical position.
7. Cap your stilling well for security. The cap will serve to keep debris, insects, and small animals out.
8. Survey the point.
9. Record the details of the stilling well, location, and note the elevations point location.

2.0 RECORDS

Field notes will be kept in a bound field logbook or approved field documentation following the format specified in SOP-04 Field Documentation. The following information should be recorded when conducting surface sampling:

- Estimate of surface area of water body (if applicable)
- Description (visual, tape measured) of sample location
- GPS coordinates, if required
- Distance of sample collection point from right or left edge of water or embankment in the downstream direction, if applicable)
- Estimate of water depth
- Sample collection method (grab or discrete)
- Sample identification
- Sample date and time
- Sample depth
- Sediment soil description (refer SOP-30)
- Site conditions (for example, floating oil or debris, gassing)
- Instrument calibration
- Required site maps
- Weather observations (e.g.,, wind speed, sunny or cloudy sky, and approximate wave height)
- Any problems encountered or deviations from this SOP
- Sampling/ monitoring equipment used

ATTACHMENT A FLUID LEVEL MONITORING FORMS

EHS Support
consider it done

FLUID LEVEL MONITORING FORM

Project: _____

Project Number: _____

Project Location: _____

Field Technician(s): _____

Weather: _____

Equipment: _____

Well ID	Date	Time	Product Level (feet bTOC)	Water Level (feet bTOC)	Total Depth (feet bTOC)	Comments

bTOC - below top of casing

Signature: _____