US EPA RECORDS CENTER REGION 5
506777

SHE-17
3/21/86
V.

REILLY TAR & CHEMICAL CORPORATION

TELEPHONE: 317/638-7531
CABLE: RETAR INDIANAPOLIS
TELEX: 27-404

1510 MARKET SQUARE CENTER
151 NORTH DELAWARE STREET
INDIANAPOLIS, INDIANA 46204

March 21, 1986

Director, Waste Management Division
U.S. EPA Region V
Attn: Remedial Response Branch
230 South Dearborn Street
Chicago, Illinois 60604

Director, Solid & Hazardous Waste Division
Minnesota Pollution Control Agency
Attn: Site Response Section
1935 West County Line Road B-2
Roseville, Minnesota 55113

Commissioner
Minnesota Department of Health
717 Delaware Street, S.E.
Minneapolis, Minnesota 55440

RE: U.S.A., ET AL. V. REILLY TAR & CHEMICAL CORPORATION, ET AL.
ST. LOUIS PARK, MINNESOTA

Ladies and Gentlemen:

It has come to my attention that the copies of the Operation and Maintenance Plan for the St. Louis Park granular activated carbon treatment plant that I sent to you on March 11, 1986 are missing the even-numbered pages for the Trane gas heater manual included in Section V. Enclosed are complete copies of the Trane manual to replace the version you received.

I apologize for any inconvenience this may have caused you.

Very truly yours,

REILLY TAR & CHEMICAL CORPORATION

John C. Craun/lt

John C. Craun
Senior Engineer,
Corporate Environmental Affairs

JCC:lt

cc: D. Bicknell (EPA - w/o enclosure)
R. Clark (MDH - w/o enclosure)
D. Robohm (MPCA - w/o enclosure)

RECEIVED
MAR 24 1986
EMERGENCY REMEDIAL RESPONSE BRANCH

REILLY TAR & CHEMICAL CORPORATION

TELEPHONE: 317/638-7531
CABLE: RETAR INDIANAPOLIS
TELEX: 27-404

1510 MARKET SQUARE CENTER
151 NORTH DELAWARE STREET
INDIANAPOLIS, INDIANA 46204

March 21, 1986

Director, Waste Management Division
U.S. EPA Region V
Attn: Remedial Response Branch
230 South Dearborn Street
Chicago, Illinois 60604

Director, Solid & Hazardous Waste Division
Minnesota Pollution Control Agency
Attn: Site Response Section
1935 West County Line Road B-2
Roseville, Minnesota 55113

Commissioner
Minnesota Department of Health
717 Delaware Street, S.E.
Minneapolis, Minnesota 55440

RE: U.S.A., ET AL. V. REILLY TAR & CHEMICAL CORPORATION, ET AL.
ST. LOUIS PARK, MINNESOTA

Ladies and Gentlemen:

It has come to my attention that the copies of the Operation and Maintenance Plan for the St. Louis Park granular activated carbon treatment plant that I sent to you on March 11, 1986 are missing the even-numbered pages for the Trane gas heater manual included in Section V. Enclosed are complete copies of the Trane manual to replace the version you received.

I apologize for any inconvenience this may have caused you.

Very truly yours,

REILLY TAR & CHEMICAL CORPORATION

John C. Craun /lt

John C. Craun
Senior Engineer,
Corporate Environmental Affairs

JCC:lt

cc: D. Bicknell (EPA - w/o enclosure)
R. Clark (MDH - w/o enclosure)
D. Robohm (MPCA - w/o enclosure)

RECEIVED
MAR 25 1986
U.S. EPA, REGION V
WASTE MANAGEMENT DIVISION
HAZARDOUS WASTE ENFORCEMENT BRANCH

FILE INFORMATION:
DIVISION TAB - TRANE HEATING PRODUCTS
PRODUCT TAB - UNIT HEATERS
MODEL TAB - GAS FIRED
LITERATURE ITEM - Unit Wiring

LITERATURE FILE NO.

GDNC-W-1

UNIT WIRING

Since the Trane Company has a policy of continuous product improvement, it reserves the right to change specifications and design without notice. The installation and servicing of the equipment referred to in this booklet should be done by qualified, experienced technicians.

JULY 1982

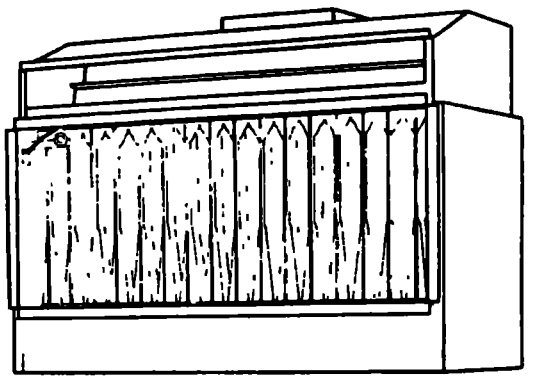

RECEIVED
APR 4 1986
U.S. EPA, REGION V
WASTE MANAGEMENT DIVISION
HAZARDOUS WASTE ENFORCEMENT BRANCH

INDOOR GAS UNIT HEATERS AND DUCT FURNACES

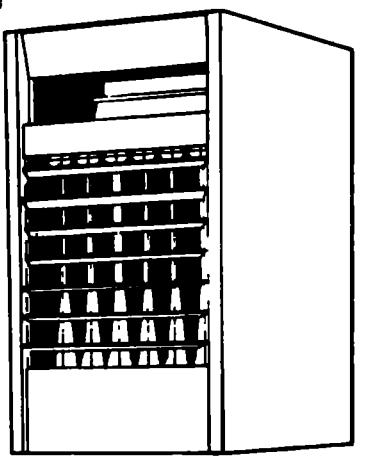

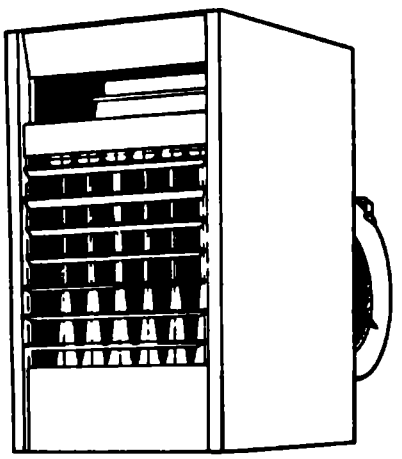

MODELS
GPNC/GPPC-003 THRU 040
GCNC/GCPC-005 THRU 040
GDNC/GDPC-005 THRU 040

DESIGN SEQUENCE A

NOTE: Hydraulic modulationg gas control shown in this manual consists of a mechanically operated valve (not illustrated) in series with a single stage electrically operated valve.

CAUTION: THE WIRING DIAGRAMS GIVEN IN THIS BOOKLET ARE TYPICAL AND ACTUAL WIRING OF YOUR UNIT MAY DIFFER. TO PREVENT DAMAGE TO UNIT, REFER TO THE "AS WIRED" DIAGRAMS PROVIDED WITH THE UNIT FOR SPECIFIC INFORMATION.

CAUTION: USE COPPER CONDUCTORS ONLY - UNIT TERMINALS ARE NOT DESIGNED TO ACCEPT OTHER TYPE WIRING. THE USE OF ALUMINUM WIRING MAY CAUSE GALVANIC CORROSION AND/OR OVERHEATING AT THE CONNECTION POINTS WITH RESULTANT EQUIPMENT FAILURE.

TABLE OF CONTENTS

PROPELLER AND CENTRIFUGAL FAN UNIT HEATERS
Standing Pilot Ignition 3
Intermittent Pilot Ignition 6
CENTRIFUGAL FAN UNIT HEATERS
Standing Pilot Ignition 9
Intermittent Pilot Ignition 12
INDOOR DUCT FURNACES
Standing Pilot Ignition 15
Intermittent Pilot Ignition 28

©THE TRANE COMPANY 1982
COMMERCIAL AIR CONDITIONING DIVISION
LA CROSSE, WISCONSIN 54601
PRINTED IN U.S.A.

MODEL NUMBER DESCRIPTION

Trane products are identified by a multiple character model number that precisely identifies a particular type of unit. An explanation of the multiple character number is shown below. It will enable the owner or Service Engineer to define operation, components and accessories.

G D N C 0 0 5 A A A 1 0 0 0 A

GAS HEATING EQUIPMENT

UNIT TYPE
C = Centrifugal Fan Unit Heater
D = Indoor Duct Furnace
F = Rooftop Duct Furnace
R = Rooftop Heating Unit
P = Propeller Fan Unit Heater
S = Special

FUEL
N = Natural Gas
P = LP Gas (Propane)
S = Special

DEVELOPMENT SEQUENCE
C = Third Generation

INPUT CAPACITY
SINGLE FURNACE
003 = 30 MBH
004 = 45 MBH
005 = 50 MBH
006 = 60 MBH
007 = 75 MBH
010 = 100 MBH
012 = 125 MBH
015 = 150 MBH
017 = 175 MBH
020 = 200 MBH
022 = 225 MBH
025 = 250 MBH
030 = 300 MBH
035 = 350 MBH
040 = 400 MBH

DOUBLE FURNACE
050 = 500 MBH
060 = 600 MBH
070 = 700 MBH
080 = 800 MBH

TRIPLE FURNACE
120 = 1200 MBH

MAIN POWER SUPPLY
A = 115/60/1
B = 230/60/1
C = 208/60/3
D = 230/60/3
E = 460/60/3
S = Special

GAS CONTROL OPTION
A = Single-Stage, Standing Pilot
B = Two-Stage, Standing Pilot
C = Hydraulic Modulating, Standing Pilot
D = Single-Stage, Intermittent Pilot Ignition
E = Two-Stage, Intermittent Pilot Ignition
F = Hydraulic Modulating, Intermittent Pilot Ignition
G = Hydraulic Modulating With Bypass, Intermittent Pilot Ignition
H = Electronic Modulating With Room T-Stat, Intermittent Pilot Ignition
J = Electronic Modulating With Duct T-Stat, Intermittent Pilot Ignition
S = Special

DESIGN SEQUENCE
A = First Design

HEAT EXCHANGER MATERIAL
1 = Aluminized Steel
2 = #409 Stainless Steel
3 = #321 Stainless Steel
S = Special

MISCELLANEOUS OPTIONS

All Units
0 = None
A = #409 Stainless Steel Burners
B = Orifices For Elevation Above 2000 Feet (Specify Elevation)
S = Special

Propeller Fan Unit Heater
C = #409 Stainless Steel Draft Diverter
D = Summer-Winter Switch
E = Vertical Louvers

Centrifugal Fan Unit Heater
C = #409 Stainless Steel Draft Diverter
D = Summer-Winter Switch
E = Vertical Louvers
H = Duct Discharge Flange

Dust Furnace (Indoor)
C = #409 Stainless Steel Draft Diverter
D = Summer-Winter Switch
F = Horizontal Louvers
G = Horizontal & Vertical Louvers
K = Side Access Burner Drawer
L = Fan Time Delay Control

Rooftop
C = #409 Stainless Steel Flue Collector
J = Totally Enclosed Motor
L = Fan Time Delay Control (Duct Furnace Only)
N = 115 Volt Convenience Outlet
P = Power Venting
R = Two Position Dampers & Motor
T = Manual Dampers
U = Magnetic Starter
V = Spring Return Modulating Damper Motor
W = Return Air Firestat
X = Supply Air Firestat
Y = Line Voltage Motor Contactor
Z = Low Voltage Motor Contactor

ROOFTOP FAN SECTION
0 = None (Indoor Unit & Rooftop Duct Furnace)
1 = Standard
S = Special

ROOFTOP HEATING UNIT MOTOR SELECTION
0 = None (Indoor Unit & Rooftop Duct Furnace)
A = 1/2 HP
B = 3/4 HP
C = 1 HP
D = 1-1/2 HP
E = 2 HP
F = 3 HP
G = 5 HP
H = 7-1/2 HP
J = 10 HP
S = Special

ROOFTOP ARRANGEMENTS
0 = None (Indoor Unit)
1 = Rooftop Duct Furnace
2 = Rooftop Heating Unit With O.A. Hood
3 = Rooftop Heating Unit With Horiz. R.A.
4 = Rooftop Heating Unit With Bottom R.A.
5 = Rooftop Heating Unit With O.A. Hood & Bottom R.A.
6 = Rooftop Heating Unit With O.A. Hood & Supply Plenum
7 = Rooftop Heating Unit With Horiz. R.A. & Supply Plenum
8 = Rooftop Heating Unit With Bottom R.A. & Supply Plenum
9 = Rooftop Heating Unit With O.A. Hood, Bottom R.A. & Supply Plenum
S = Special

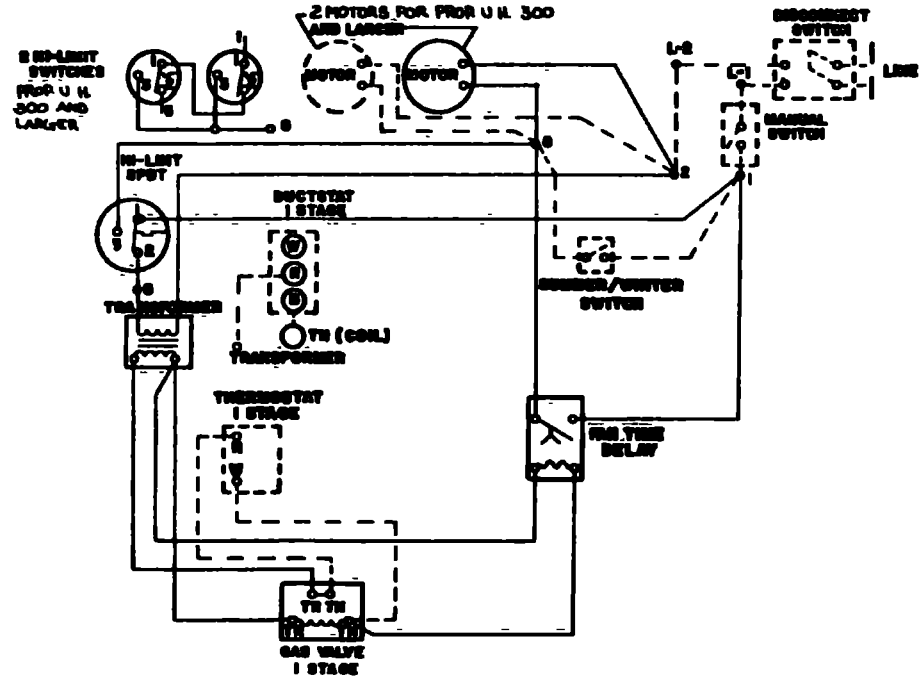

INTERCONNECTING DIAGRAM

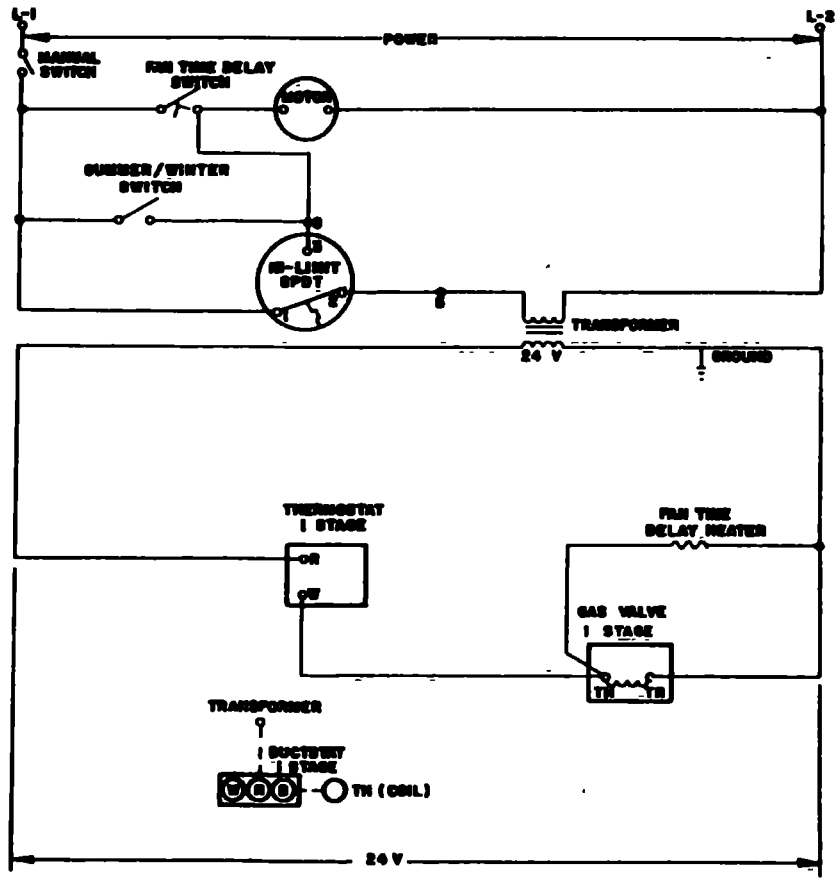

LINE DIAGRAM

WARNING

DISCONNECT ELECTRICAL POWER SOURCE TO PREVENT INJURY OR DEATH FROM ELECTRICAL SHOCK

CAUTION

USE COPPER CONDUCTORS ONLY TO PREVENT EQUIPMENT DAMAGE

GPNC-S/W-2

FIGURE 1 - Propeller and Centrifugal Fan Unit Heater, Standing Pilot Ignition, Single Stage or Hydraulic Modulating Gas Control, 115-230/60/1, Natural or LP Gas

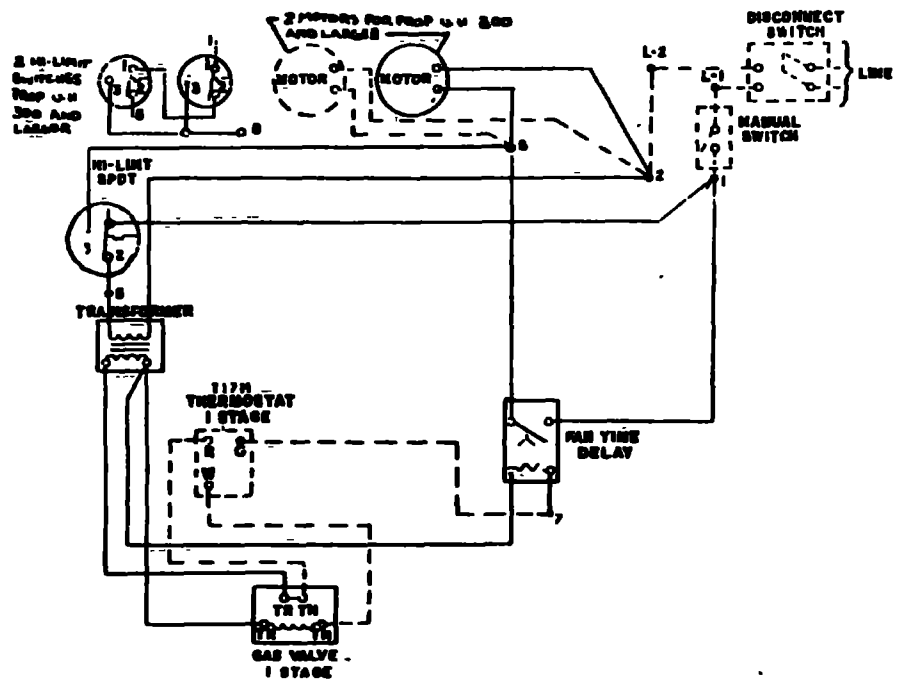

INTERCONNECTING DIAGRAM

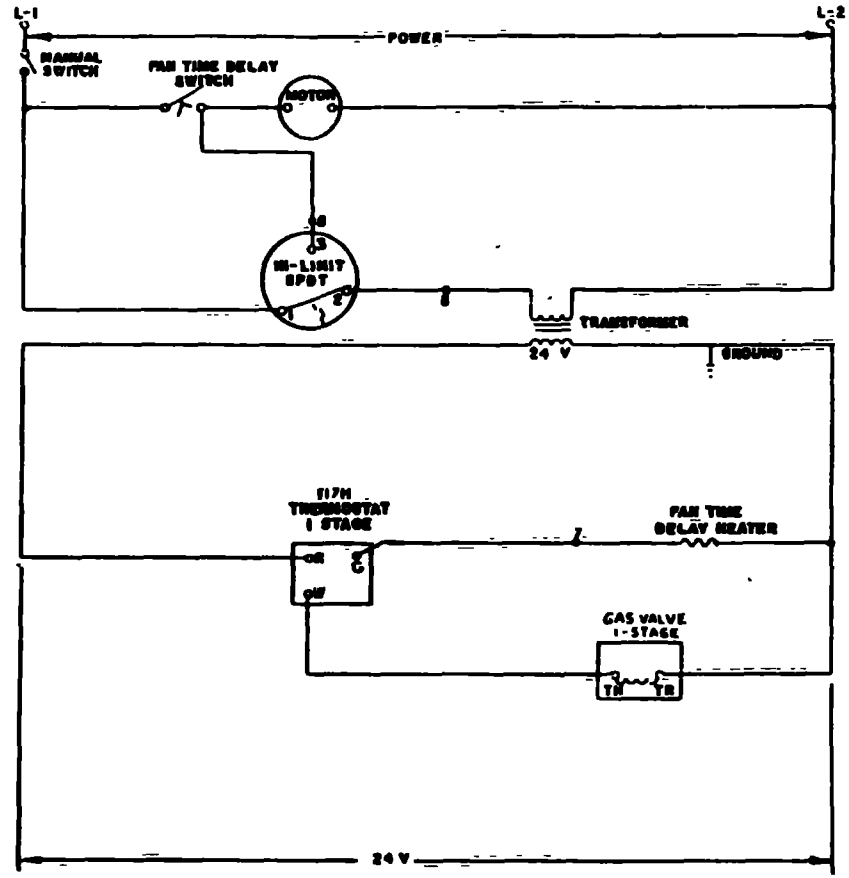

LINE DIAGRAM

WARNING
DISCONNECT ELECTRICAL POWER SOURCE TO PREVENT INJURY OR DEATH FROM ELECTRICAL SHOCK

CAUTION
USE COPPER CONDUCTORS ONLY TO PREVENT EQUIPMENT DAMAGE

GPNC-S/W-3

FIGURE 2 - Propeller and Centrifugal Fan Unit Heater, Standing Pilot Ignition, Single Stage or Hydraulic Modulating Gas Control, Thermostat with Fan Switch, 115-230/60/1, Natural or LP Gas

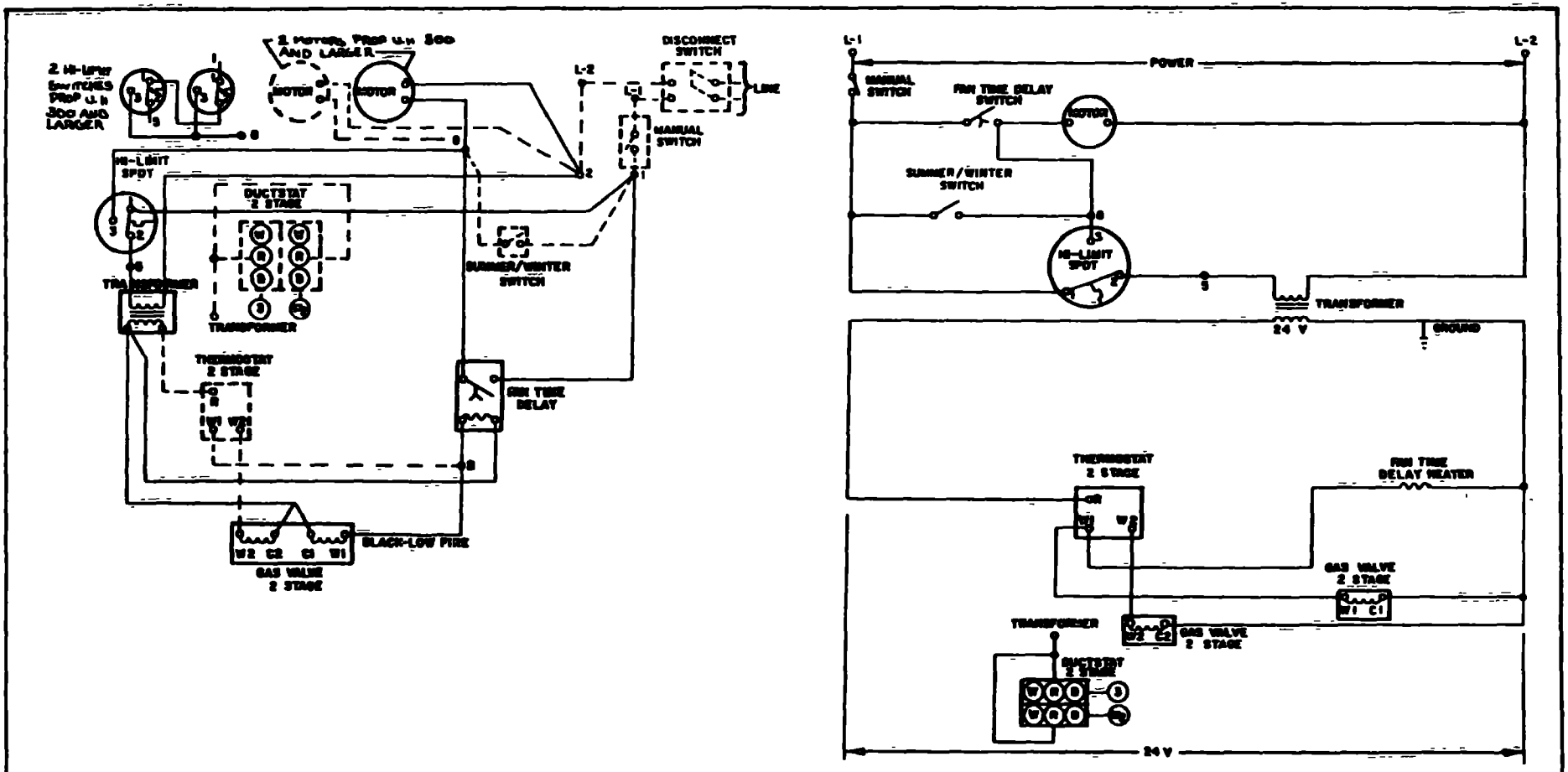

INTERCONNECTING DIAGRAM

LINE DIAGRAM

WARNING

DISCONNECT ELECTRICAL POWER SOURCE TO PREVENT INJURY OR DEATH FROM ELECTRICAL SHOCK

CAUTION

USE COPPER CONDUCTORS ONLY TO PREVENT EQUIPMENT DAMAGE

GPNC-S/W-4

FIGURE 3 - Propeller and Centrifugal Fan Unit Heater, Standing Pilot Ignition, Two Stage Gas Control, 115-230/60/1, Natural or LP Gas

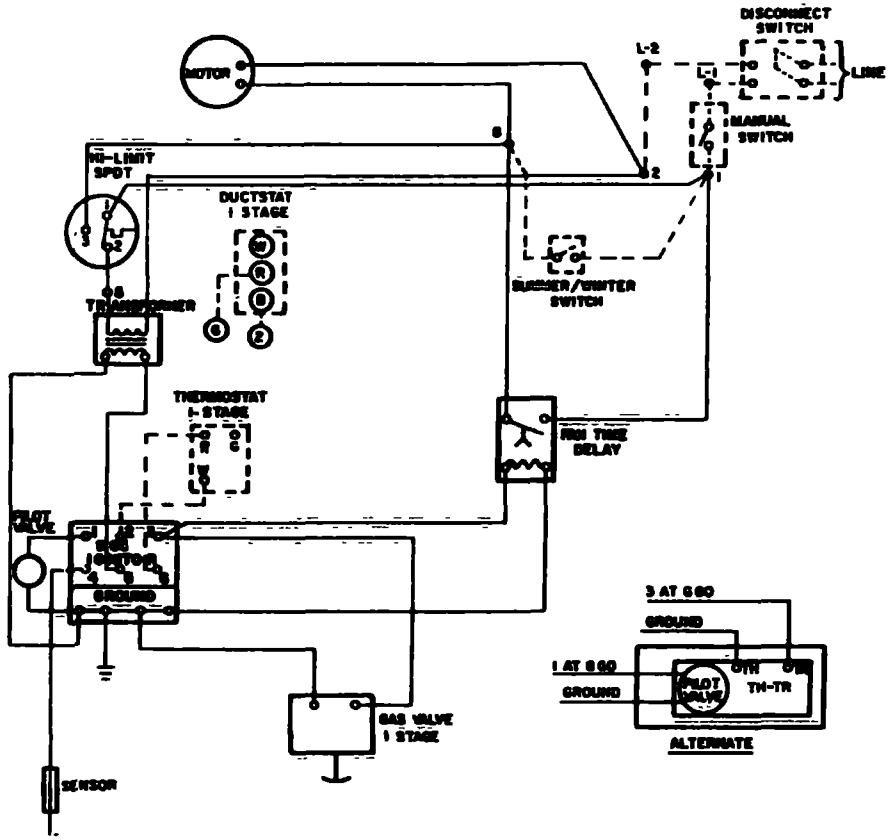

INTERCONNECTING DIAGRAM

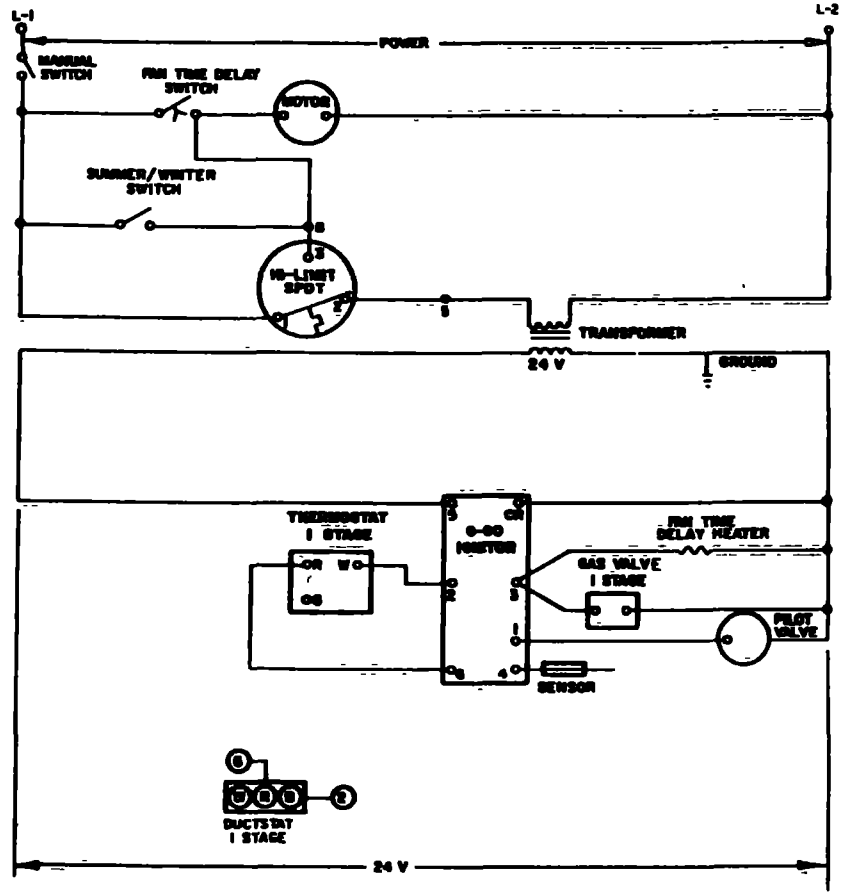

LINE DIAGRAM

WARNING

DISCONNECT ELECTRICAL POWER SOURCE TO PREVENT INJURY OR DEATH FROM ELECTRICAL SHOCK

CAUTION

USE COPPER CONDUCTORS ONLY TO PREVENT EQUIPMENT DAMAGE

GPNC-S/W-5

FIGURE 4 - Propeller and Centrifugal Fan Unit Heater, Intermittent Pilot Ignition, Single Stage or Hydraulic Modulating Gas Control, 115-230/60/1, Natural Gas

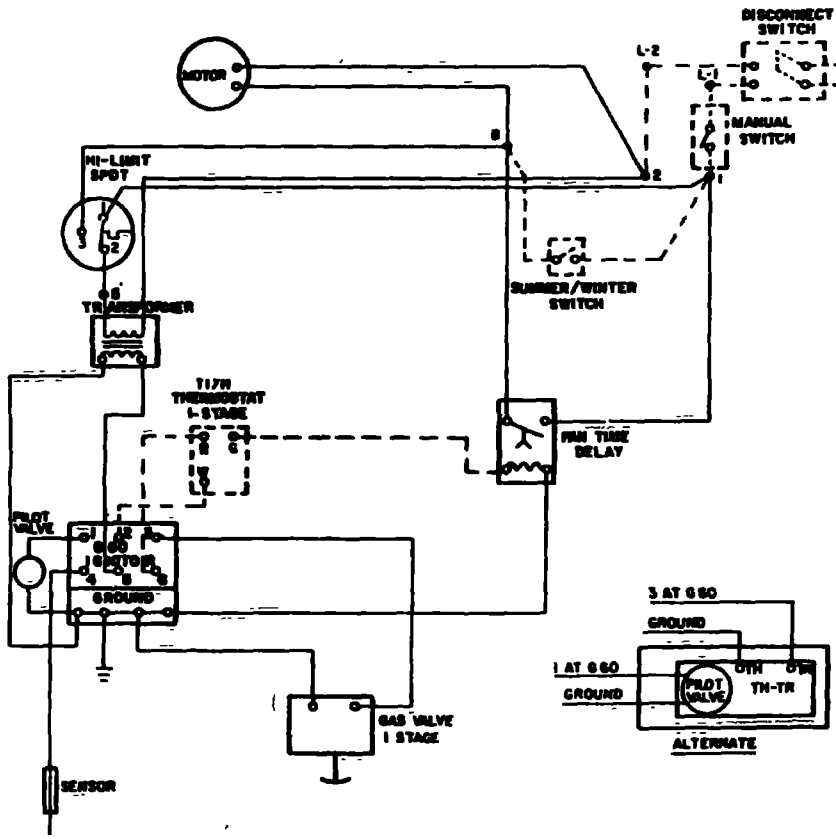

INTERCONNECTING DIAGRAM

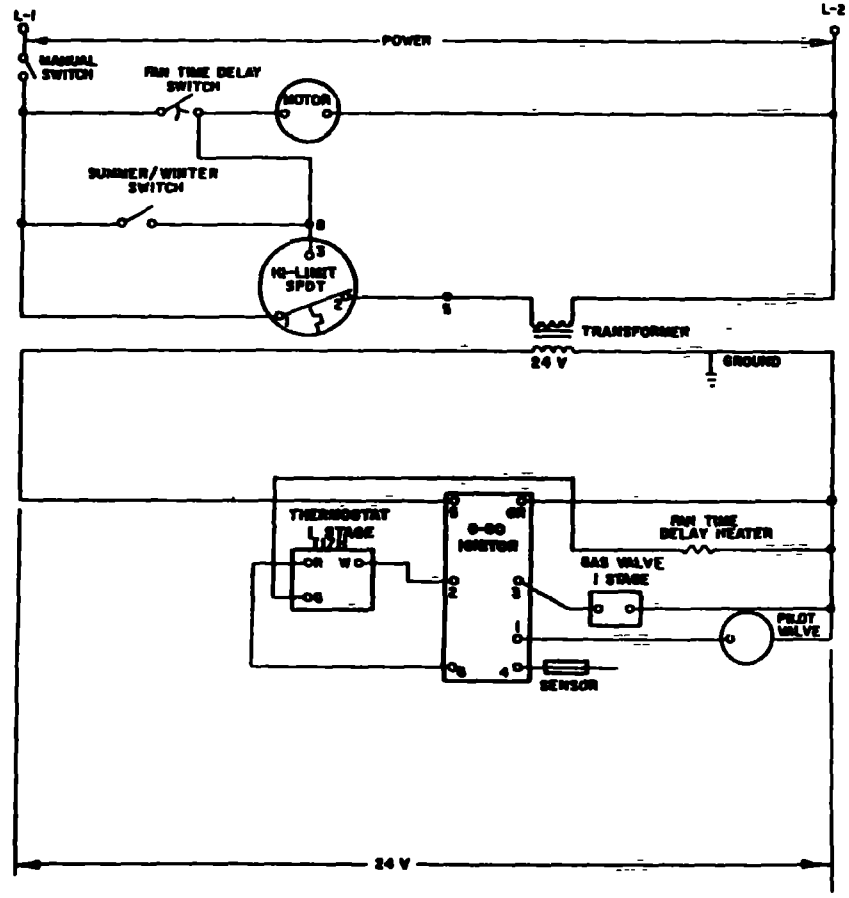

LINE DIAGRAM

WARNING
DISCONNECT ELECTRICAL POWER SOURCE TO PREVENT INJURY OR DEATH FROM ELECTRICAL SHOCK

CAUTION
USE COPPER CONDUCTORS ONLY TO PREVENT EQUIPMENT DAMAGE

GPNC-S/W-6

FIGURE 5 - Propeller and Centrifugal Fan Unit Heater, Intermittent Pilot Ignition, Single Stage or Hydraulic Modulating Gas Control, Thermostat with Fan Switch, 115-230/60/1, Natural Gas

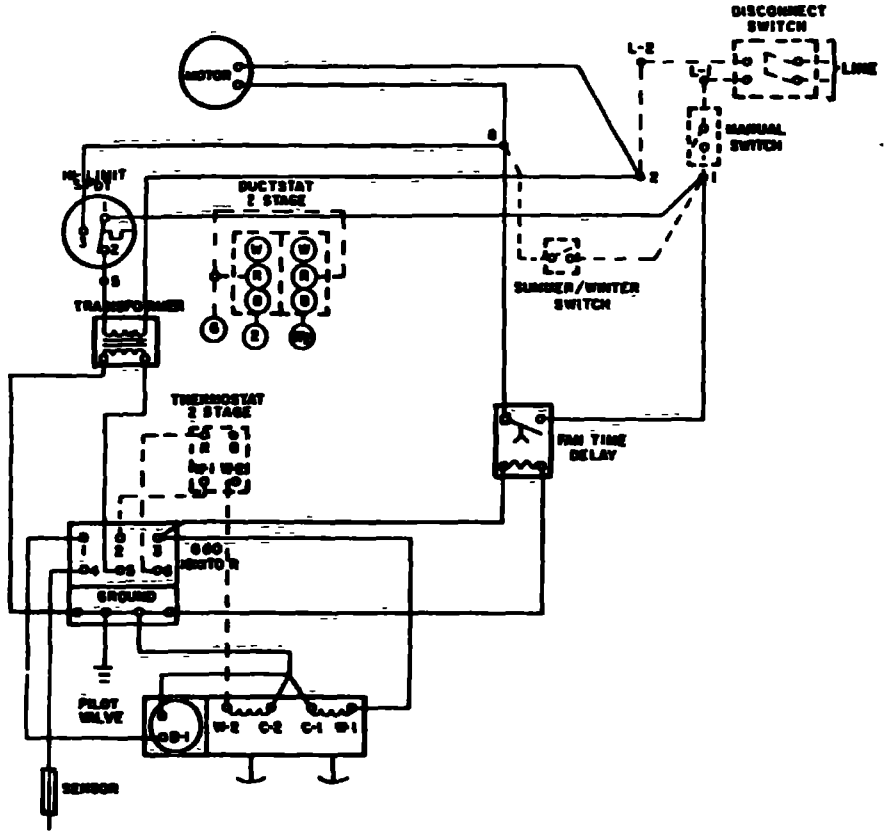

INTERCONNECTING DIAGRAM

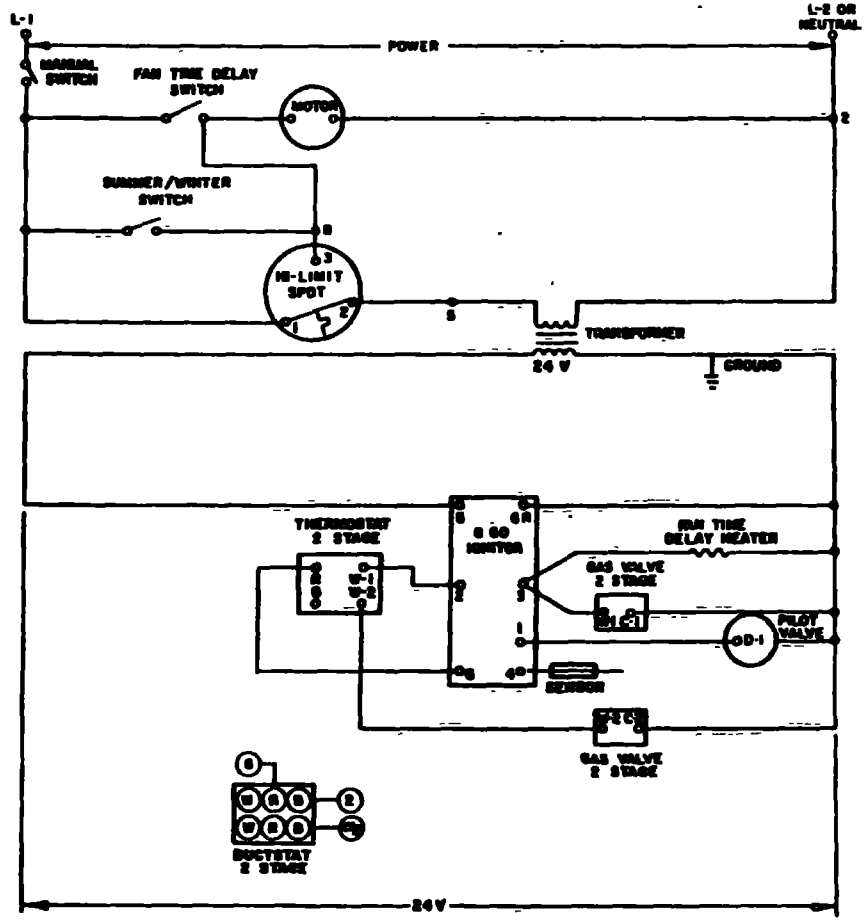

LINE DIAGRAM

WARNING
DISCONNECT ELECTRICAL POWER SOURCE TO PREVENT INJURY OR DEATH FROM ELECTRICAL SHOCK

CAUTION
USE COPPER CONDUCTORS ONLY TO PREVENT EQUIPMENT DAMAGE

GPMC-S/W-7

FIGURE 6 - Propeller and Centrifugal Fan Unit Heater, Intermittent Pilot Ignition, Two Stage Gas Control, 115-230/60/1, Natural Gas

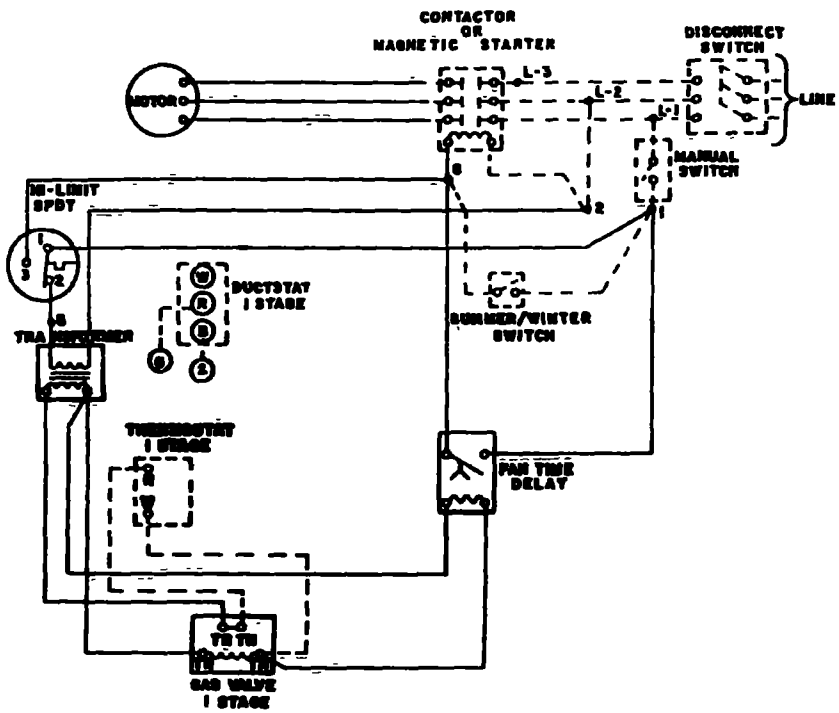

INTERCONNECTING DIAGRAM

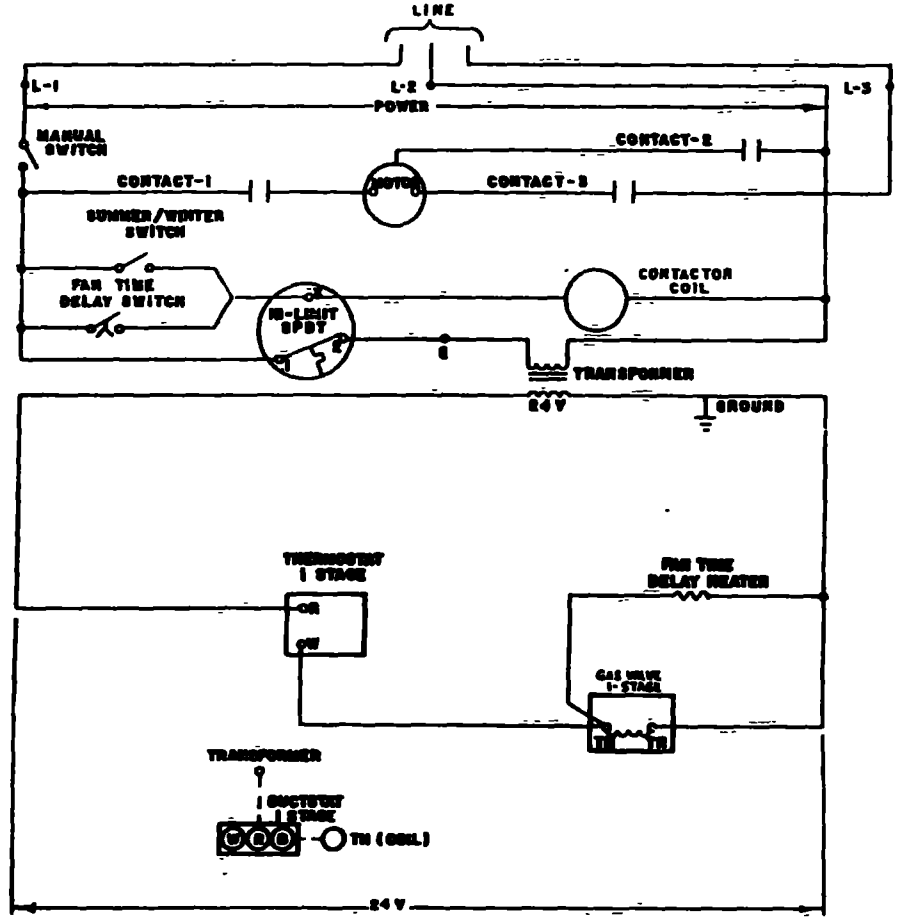

LINE DIAGRAM

WARNING
DISCONNECT ELECTRICAL POWER SOURCE TO PREVENT INJURY OR DEATH FROM ELECTRICAL SHOCK

CAUTION
USE COPPER CONDUCTORS ONLY TO PREVENT EQUIPMENT DAMAGE

GCNC-S/W-2

FIGURE 7 - Centrifugal Fan Unit Heater, Standing Pilot Ignition, Single Stage or Hydraulic Modulating Gas Control, 208-230/60/3, Natural or LP Gas

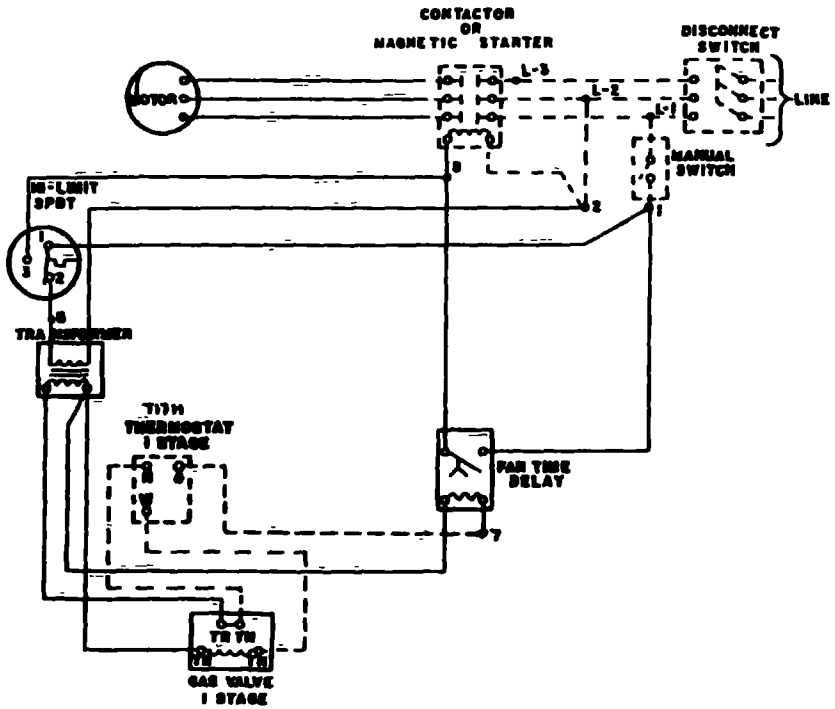

INTERCONNECTING DIAGRAM

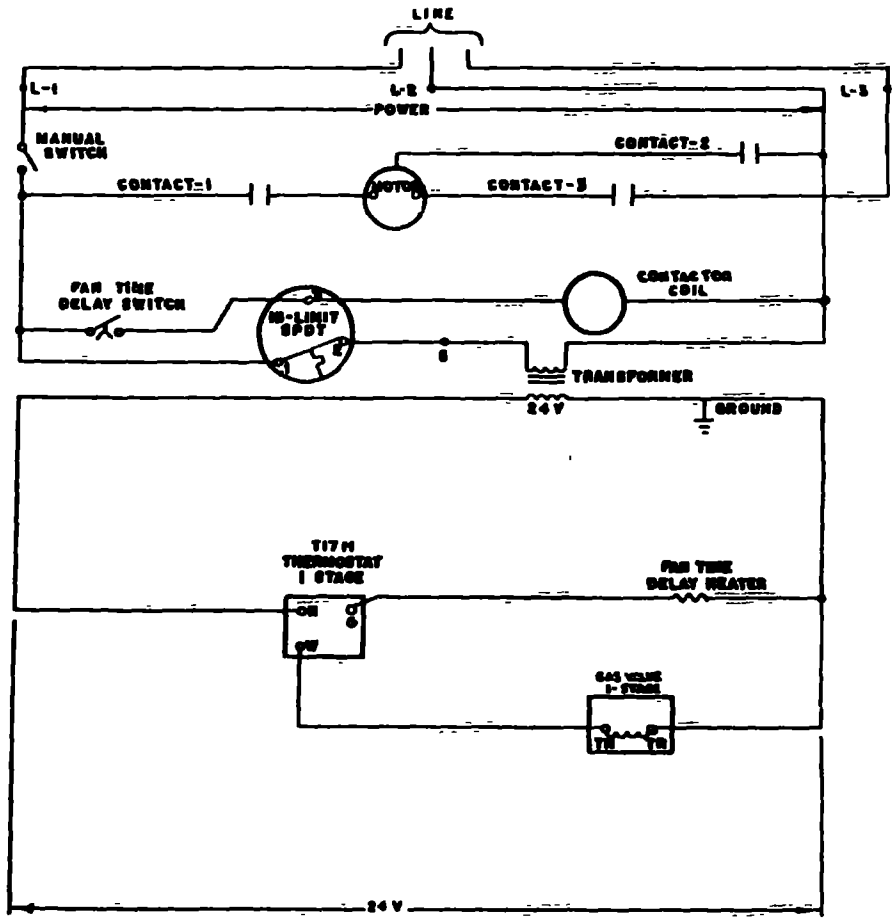

LINE DIAGRAM

WARNING

DISCONNECT ELECTRICAL POWER SOURCE TO PREVENT INJURY OR DEATH FROM ELECTRICAL SHOCK

CAUTION

USE COPPER CONDUCTORS ONLY TO PREVENT EQUIPMENT DAMAGE

GCNC-S/W-3

FIGURE 8 - Centrifugal Fan Unit Heater, Standing Pilot Ignition, Single Stage or Hydraulic Modulating Gas Control, Thermostat with Fan Switch, 208-230/60/3, Natural or LP Gas

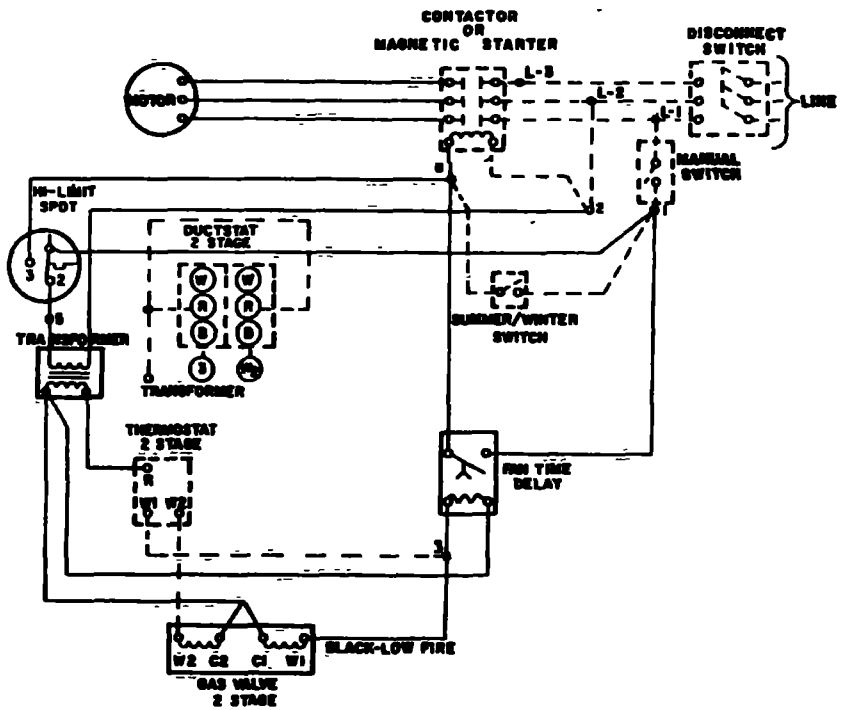

INTERCONNECTING DIAGRAM

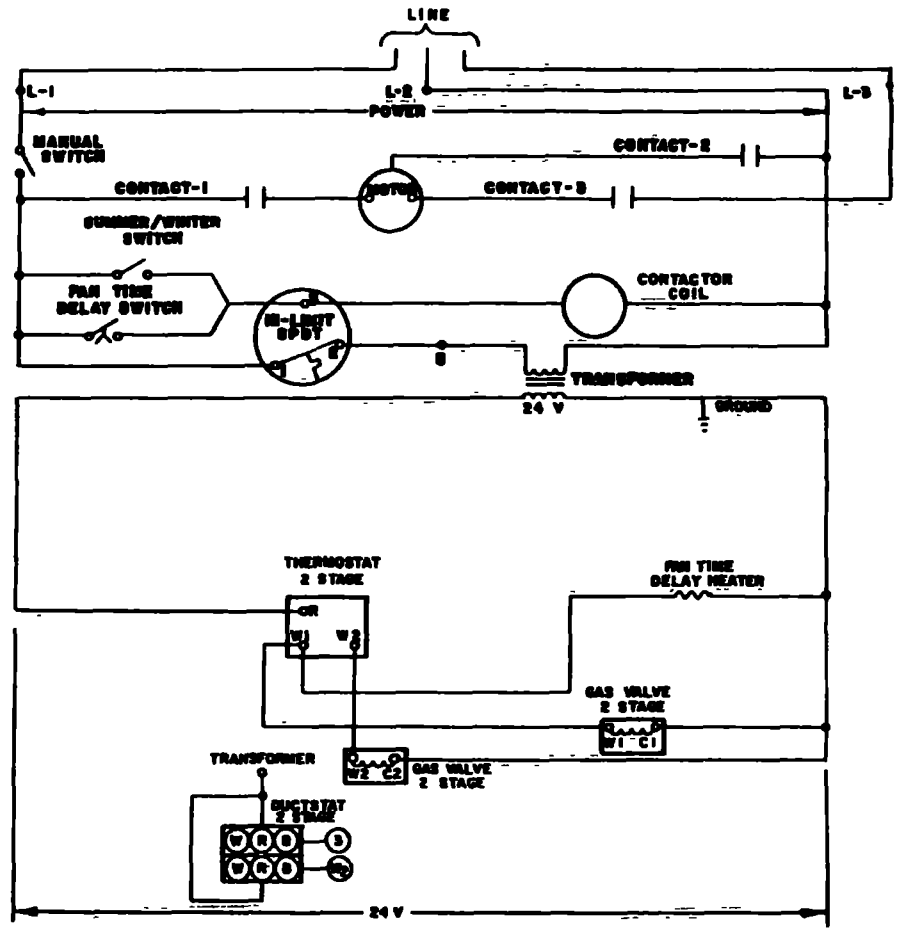

LINE DIAGRAM

WARNING

DISCONNECT ELECTRICAL POWER SOURCE TO PREVENT INJURY OR DEATH FROM ELECTRICAL SHOCK

CAUTION

USE COPPER CONDUCTORS ONLY TO PREVENT EQUIPMENT DAMAGE

GCNC-S/W-4

FIGURE 9 - Centrifugal Fan Unit Heater, Standing Pilot Ignition, Two Stage Gas Control, 208-230/60/3, Natural or LP Gas

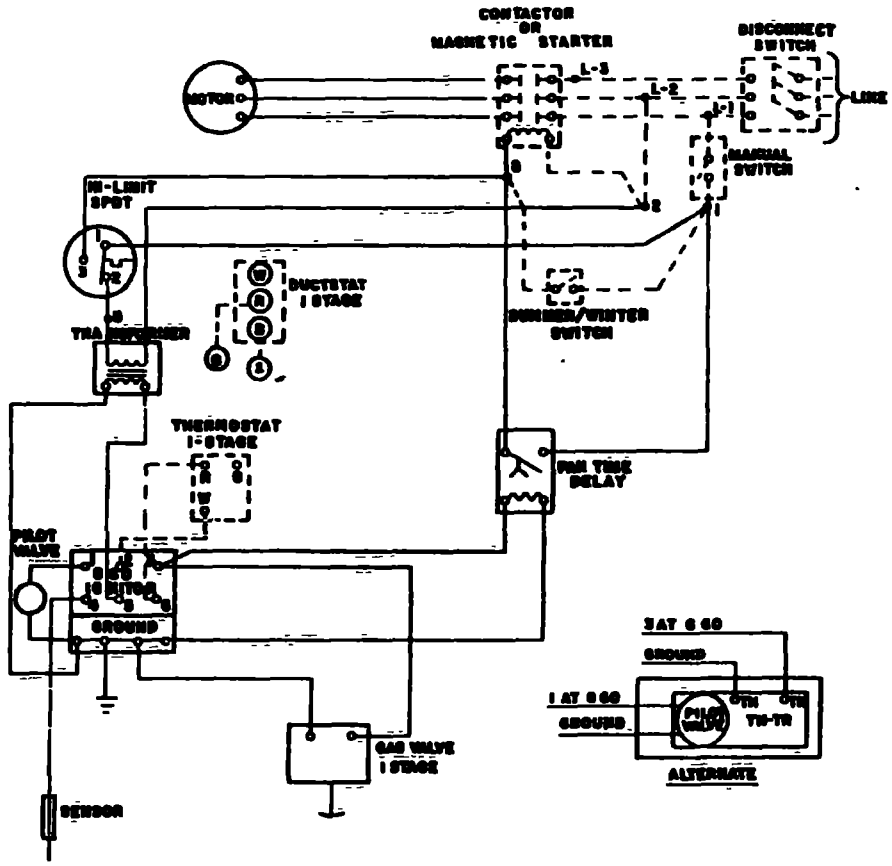

INTERCONNECTING DIAGRAM

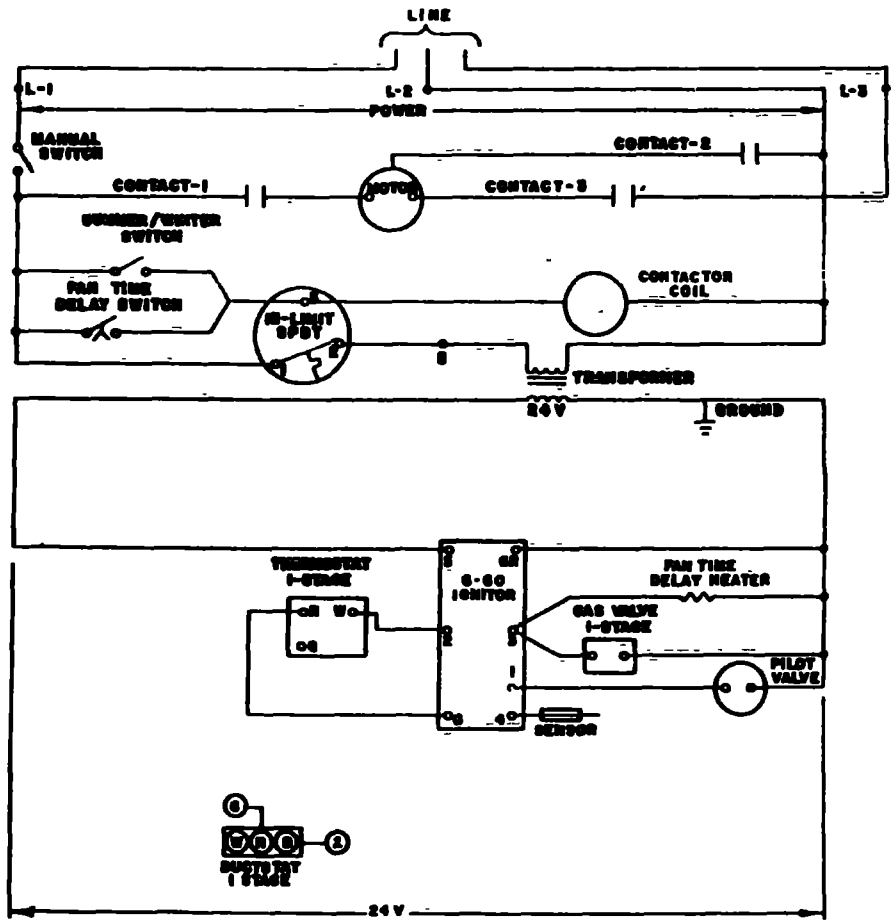

LINE DIAGRAM

WARNING
DISCONNECT ELECTRICAL POWER SOURCE TO PREVENT INJURY OR DEATH FROM ELECTRICAL SHOCK

CAUTION
USE COPPER CONDUCTORS ONLY TO PREVENT EQUIPMENT DAMAGE

GCNC-S/W-5

FIGURE 10 - Centrifugal Fan Unit Heater, Intermittent Pilot Ignition, Single Stage or Hydraulic Modulating Gas Control, 208-230/60/3, Natural Gas

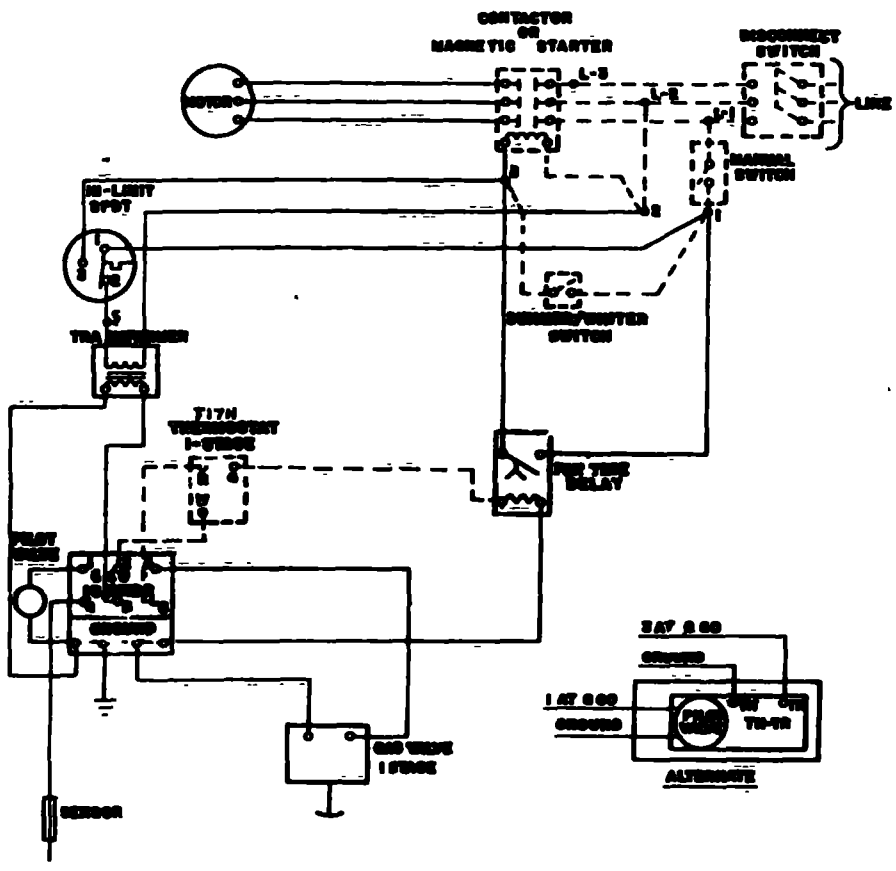

INTERCONNECTING DIAGRAM

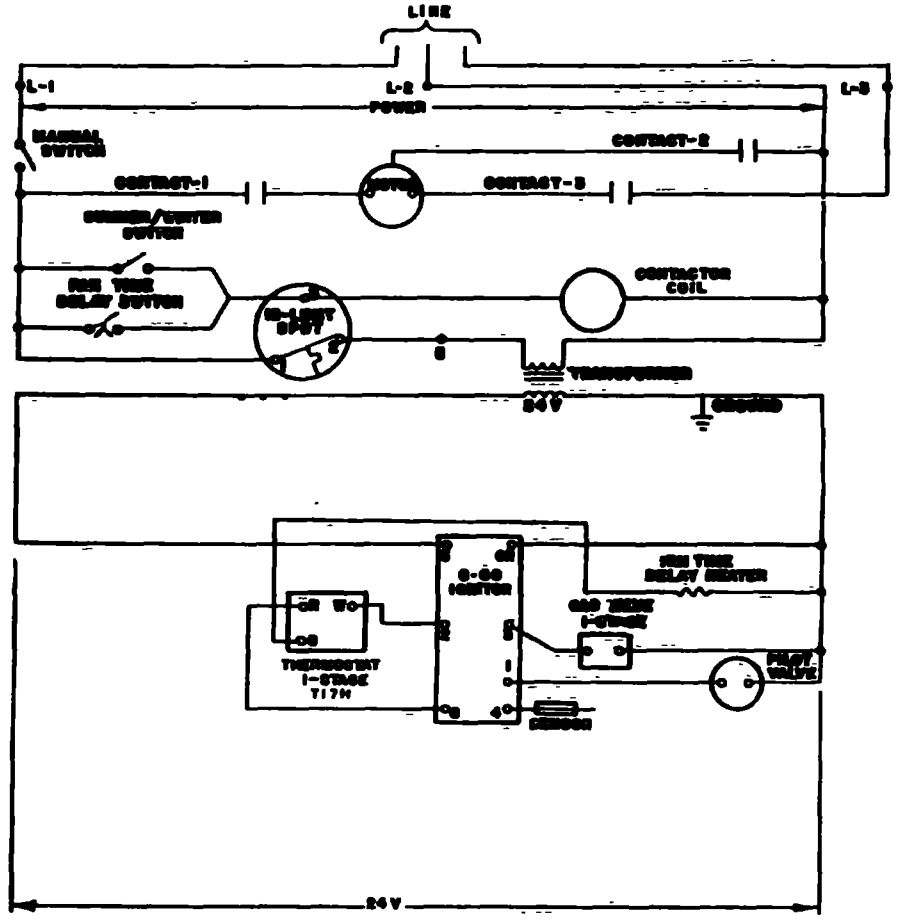

LINE DIAGRAM

WARNING
DISCONNECT ELECTRICAL POWER SOURCE TO PREVENT INJURY OR DEATH FROM ELECTRICAL SHOCK

CAUTION
USE COPPER CONDUCTORS ONLY TO PREVENT EQUIPMENT DAMAGE

GCNC-S/W-6

FIGURE 11 - Centrifugal Fan Unit Heater, Intermittent Pilot Ignition, Single Stage or Hydraulic Modulating Gas Control, Thermostat with Fan Switch, 208-230/60/3, Natural Gas

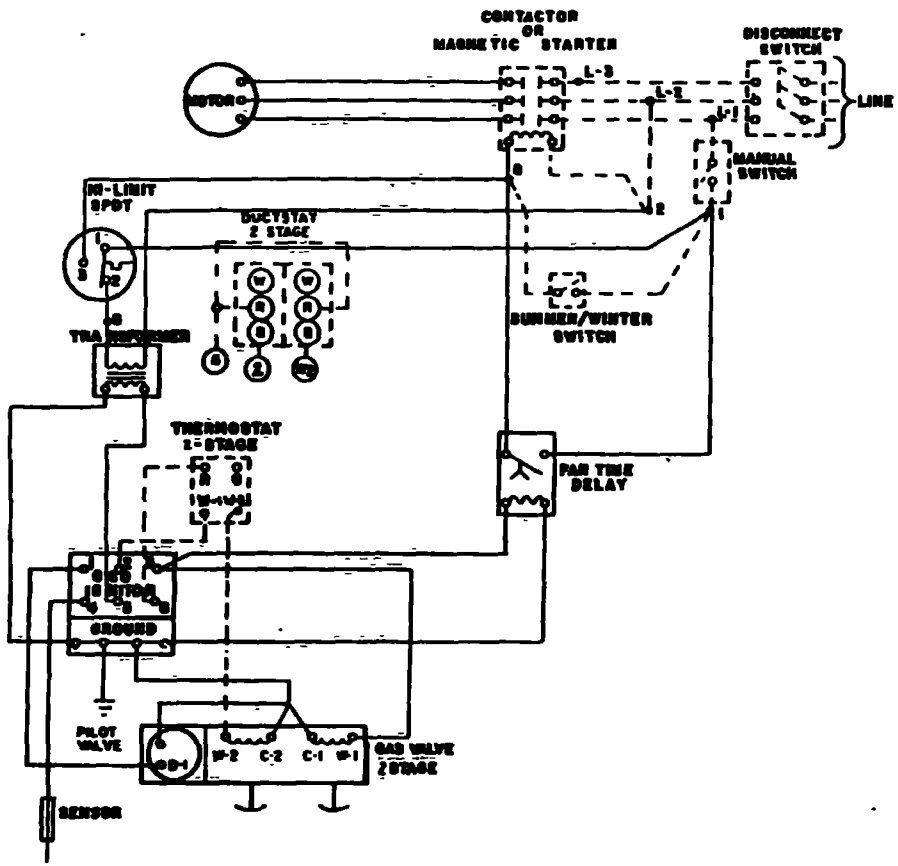

INTERCONNECTING DIAGRAM

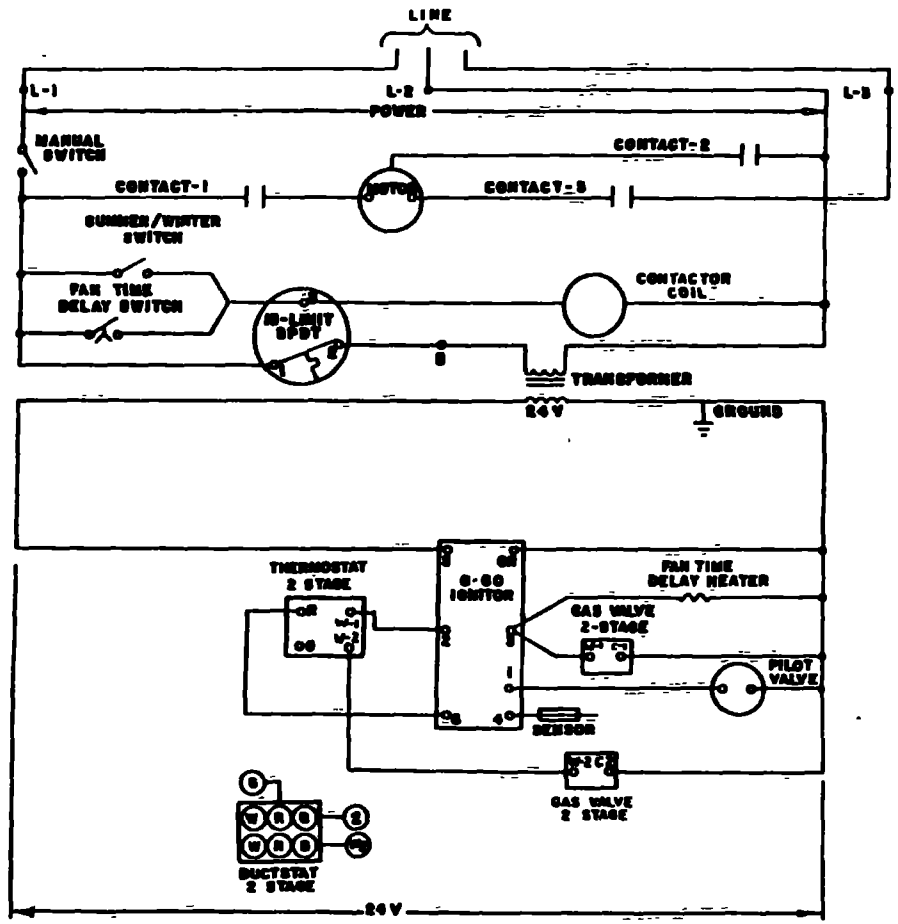

LINE DIAGRAM

WARNING
DISCONNECT ELECTRICAL POWER SOURCE TO PREVENT INJURY OR DEATH FROM ELECTRICAL SHOCK

CAUTION
USE COPPER CONDUCTORS ONLY TO PREVENT EQUIPMENT DAMAGE

GCNC-S/W-7

FIGURE 12 - Centrifugal Fan Unit Heater, Intermittent Pilot Ignition, Two Stage Gas Control, 208-230/60/3, Natural Gas

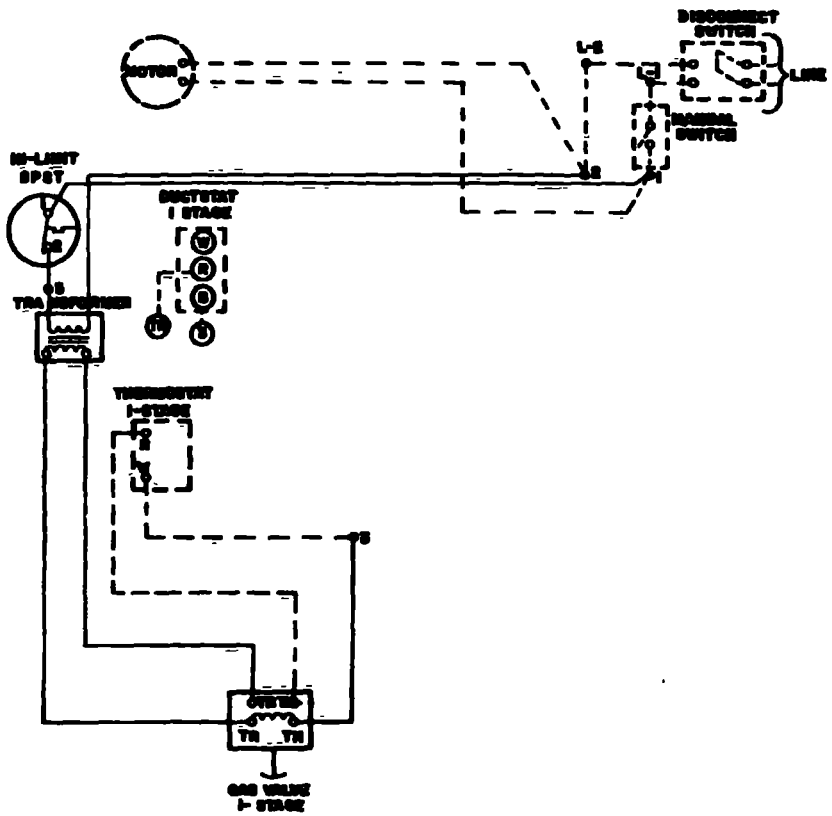

INTERCONNECTING DIAGRAM

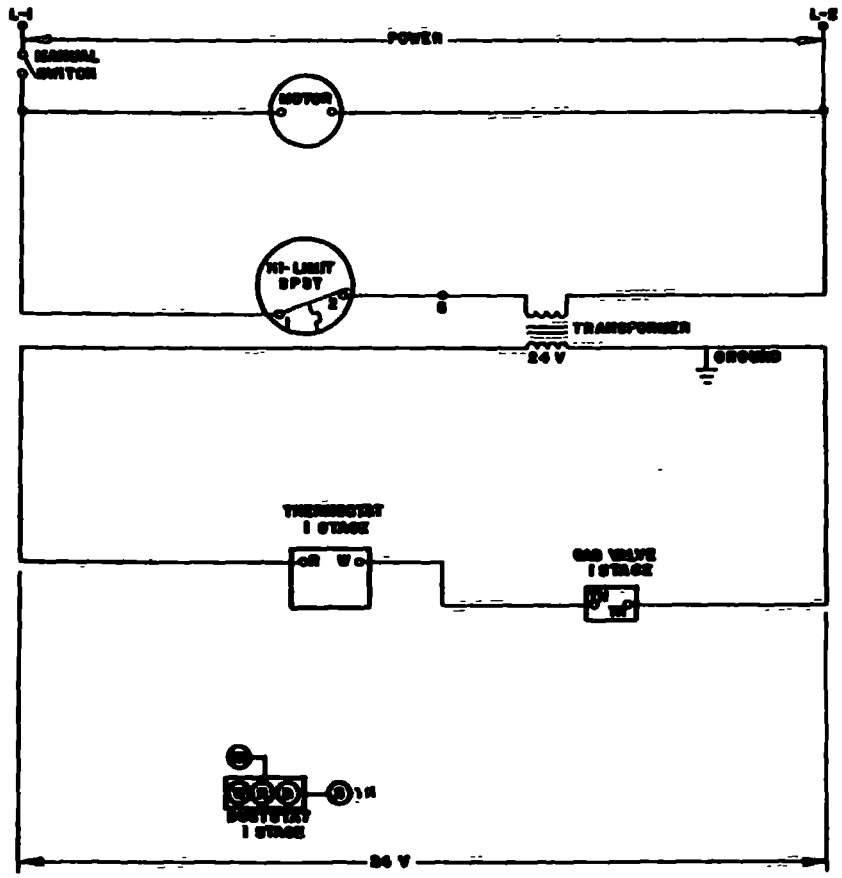

LINE DIAGRAM

WARNING

DISCONNECT ELECTRICAL POWER SOURCE TO PREVENT INJURY OR DEATH FROM ELECTRICAL SHOCK

CAUTION

USE COPPER CONDUCTORS ONLY TO PREVENT EQUIPMENT DAMAGE

GDNC-S/W-2

FIGURE 13 - Indoor Duct Furnace, Standing Pilot Ignition, Single Stage or Hydraulic Modulating Gas Control, 115-230/60/1, Natural or LP Gas

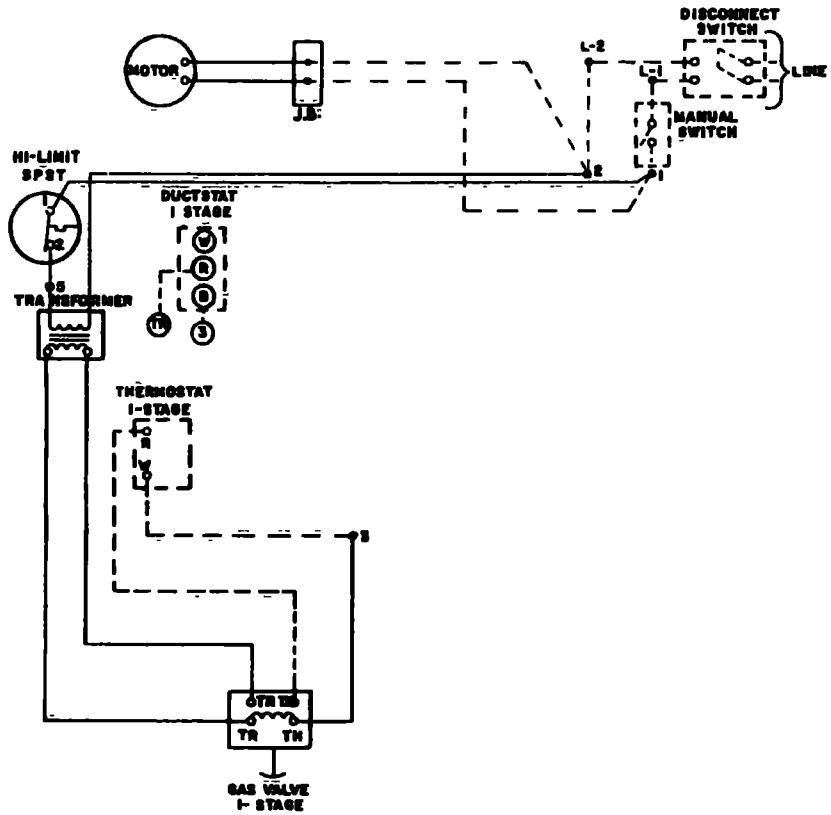

INTERCONNECTING DIAGRAM

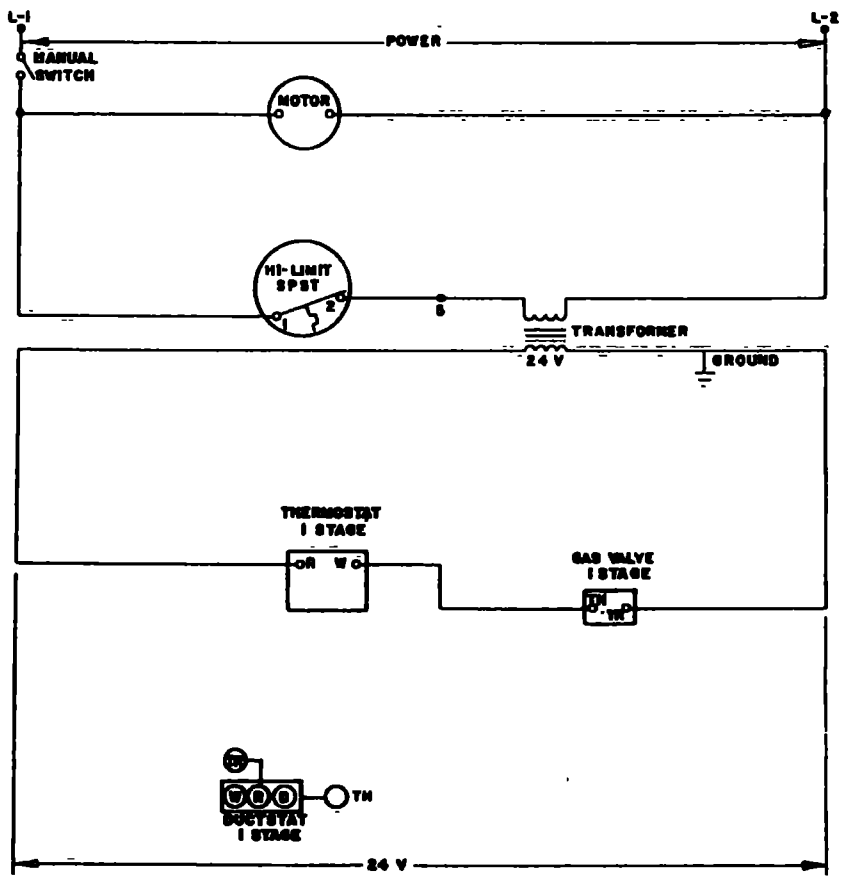

LINE DIAGRAM

WARNING
DISCONNECT ELECTRICAL POWER SOURCE TO PREVENT INJURY OR DEATH FROM ELECTRICAL SHOCK

CAUTION
USE COPPER CONDUCTORS ONLY TO PREVENT EQUIPMENT DAMAGE

GDNC-S/W-3

FIGURE 14 - Indoor Duct Furnace, Standing Pilot Ignition, Single Stage or Hydraulic Modulating Gas Control, Horizontal Blower Assembly, 115- 230/60/1, Natural or LP Gas

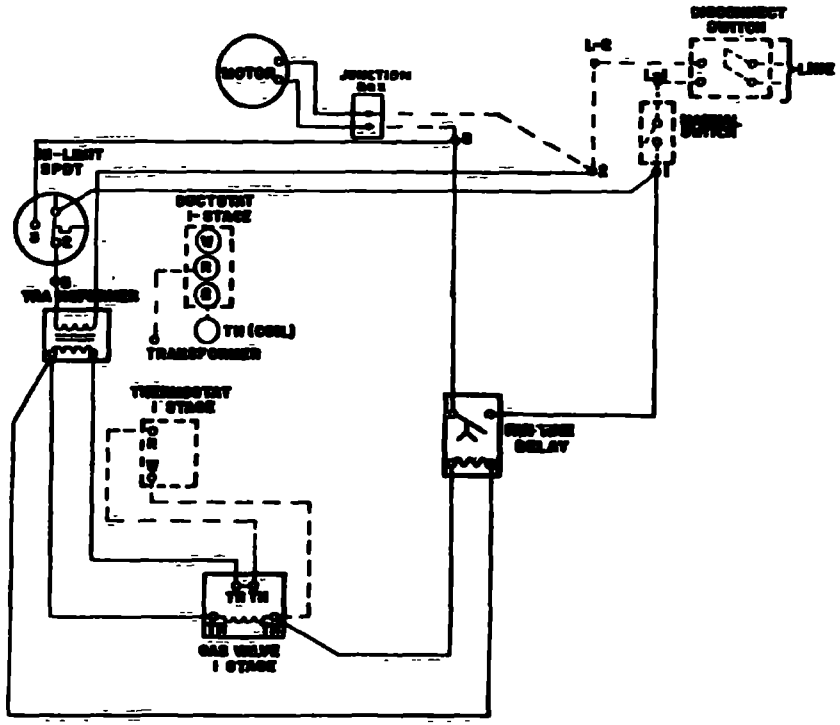

INTERCONNECTING DIAGRAM

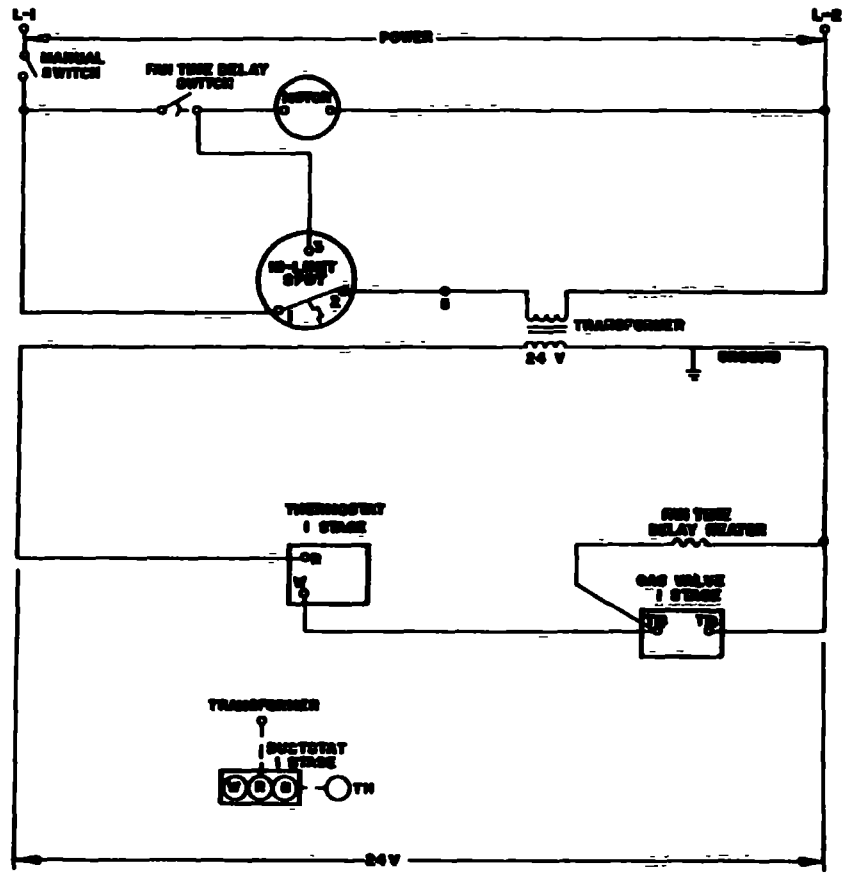

LINE DIAGRAM

WARNING
DISCONNECT ELECTRICAL POWER SOURCE TO PREVENT INJURY OR DEATH FROM ELECTRICAL SHOCK

CAUTION
USE COPPER CONDUCTORS ONLY TO PREVENT EQUIPMENT DAMAGE

GDNC-S/W-4

FIGURE 15 - Indoor Duct Furnace, Standing Pilot Ignition, Single Stage or Hydraulic Modulating Gas Control, Horizontal Blower Assembly, Fan Time Delay, 115-230/60/1, Natural or LP Gas

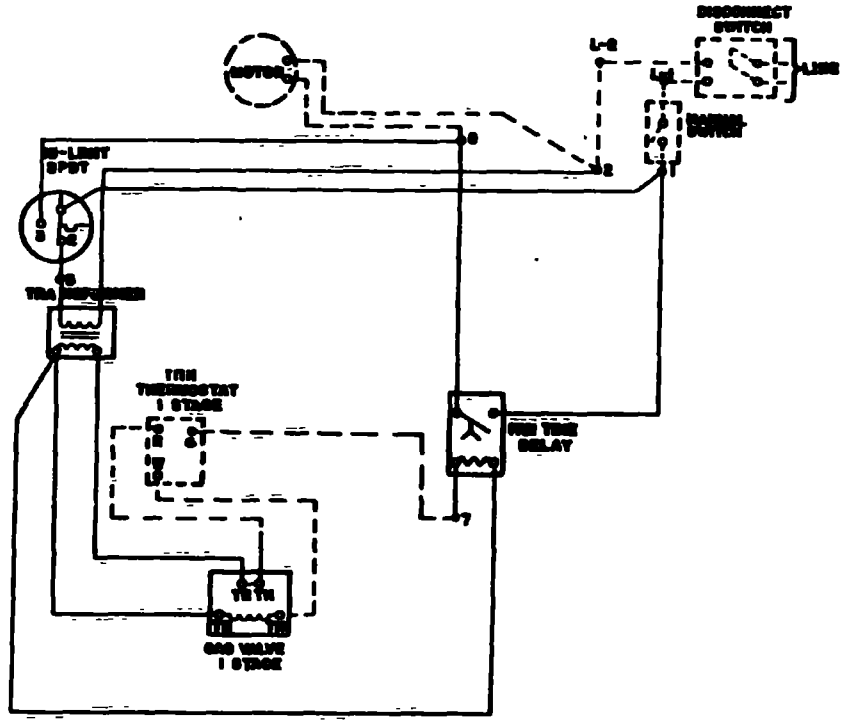

INTERCONNECTING DIAGRAM

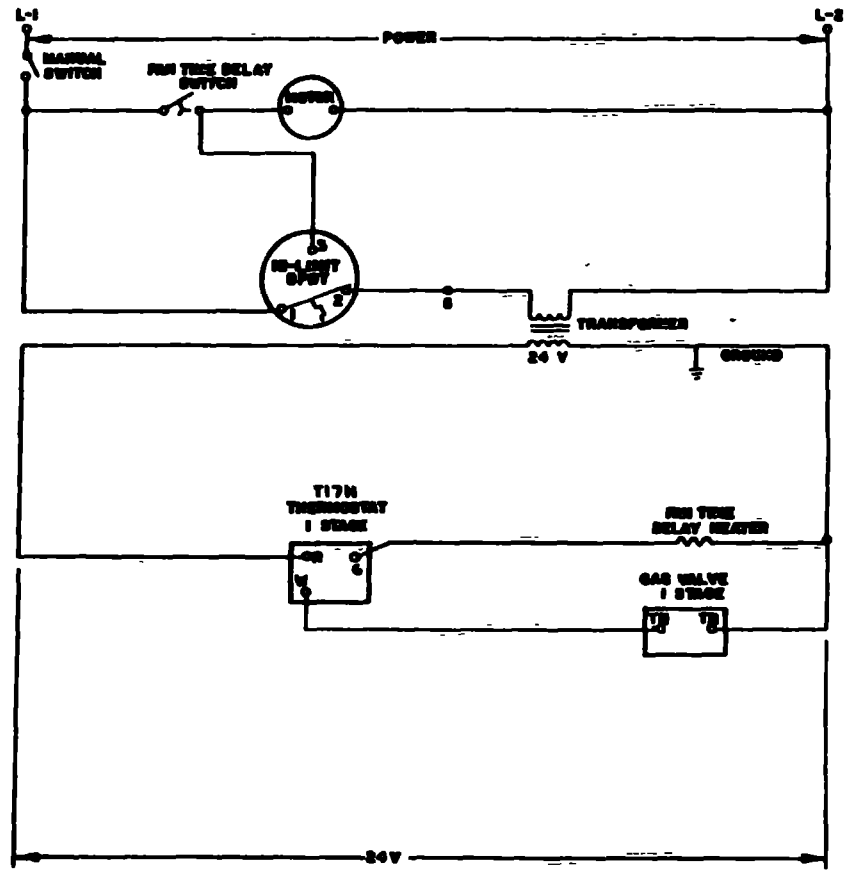

LINE DIAGRAM

WARNING
DISCONNECT ELECTRICAL POWER SOURCE TO PREVENT INJURY OR DEATH FROM ELECTRICAL SHOCK

CAUTION
USE COPPER CONDUCTORS ONLY TO PREVENT EQUIPMENT DAMAGE

GDNC-S/W-5

FIGURE 16 - Indoor Duct Furnace, Standing Pilot Ignition, Single Stage or Hydraulic Modulating Gas Control, Thermostat with Fan Switch, Fan Time Delay, 115-230/60/1, Natural or LP Gas

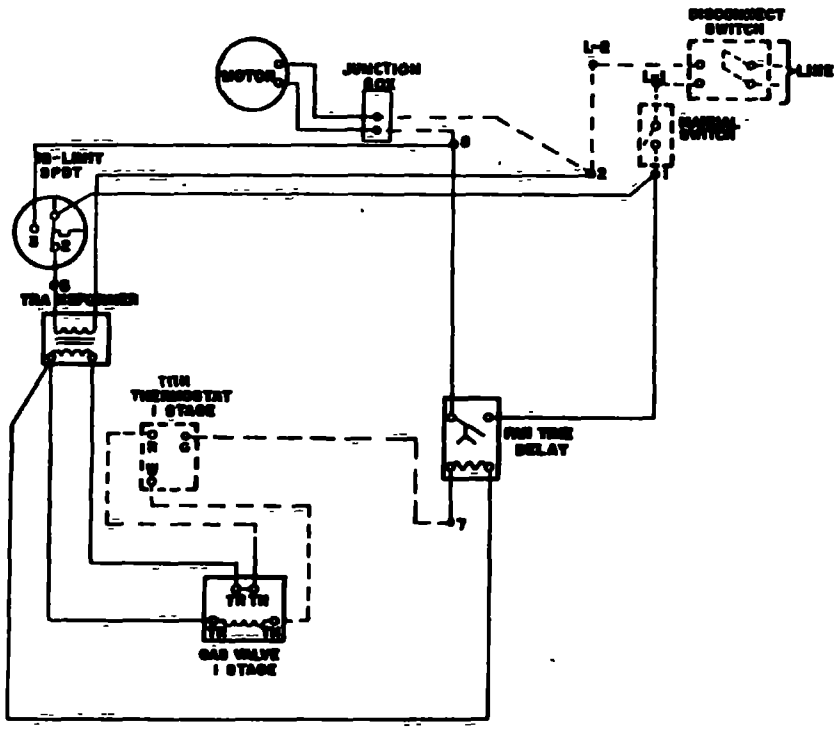

INTERCONNECTING DIAGRAM

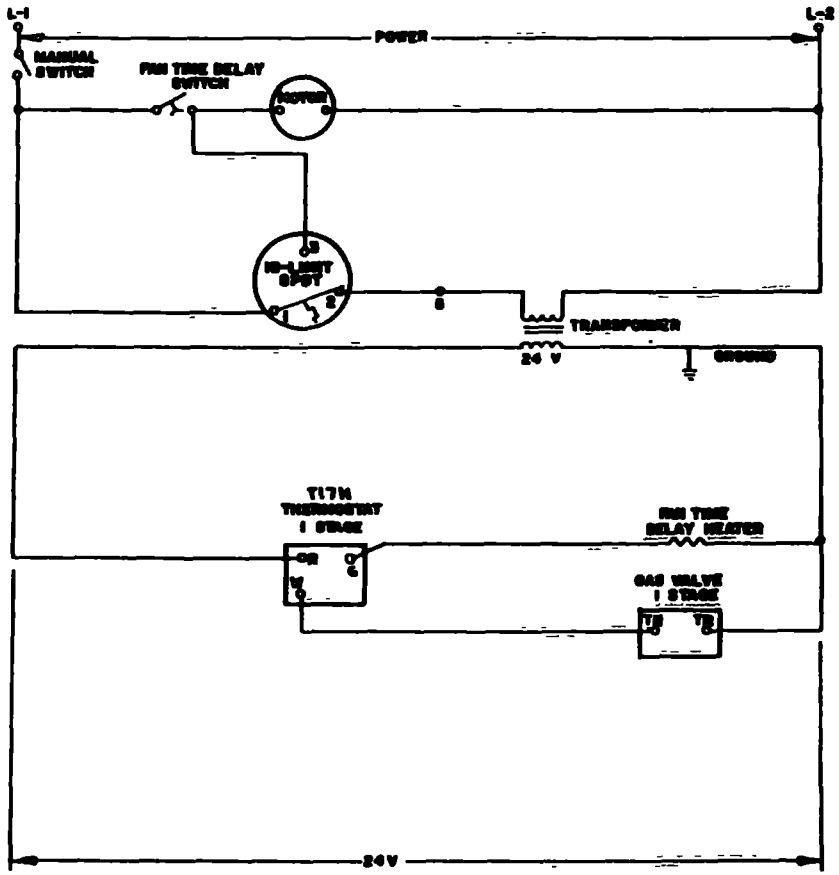

LINE DIAGRAM

WARNING

DISCONNECT ELECTRICAL POWER SOURCE TO PREVENT INJURY OR DEATH FROM ELECTRICAL SHOCK

CAUTION

USE COPPER CONDUCTORS ONLY TO PREVENT EQUIPMENT DAMAGE

GDNC-S/W-6

FIGURE 17 - Indoor Duct Furnace, Standing Pilot Ignition, Single Stage or Hydraulic Modulating Gas Control, Horizontal Blower Assembly, Fan Time Delay, Thermostat with Fan Switch, 115-230/60/1, Natural or LP Gas

GDNC-W-1

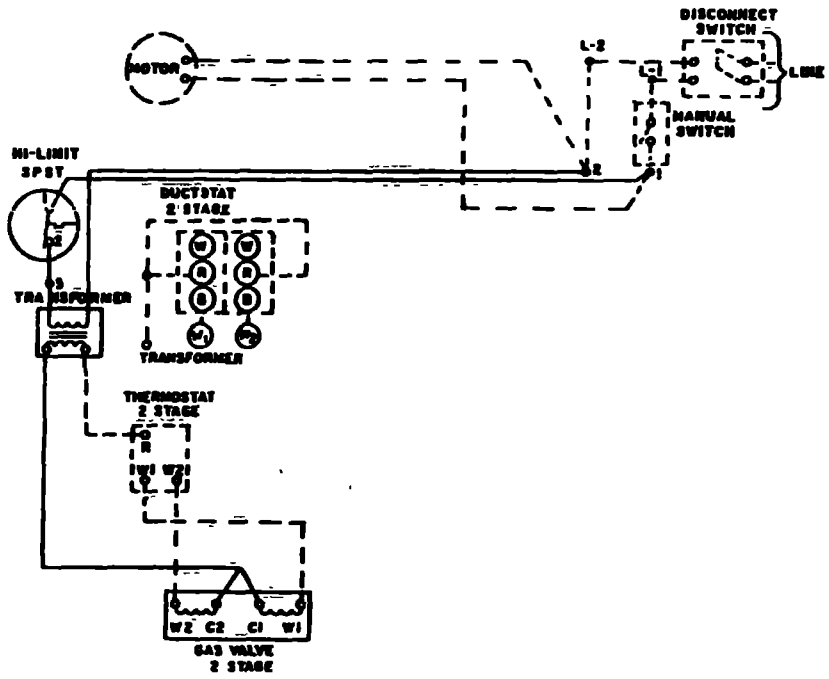

INTERCONNECTING DIAGRAM

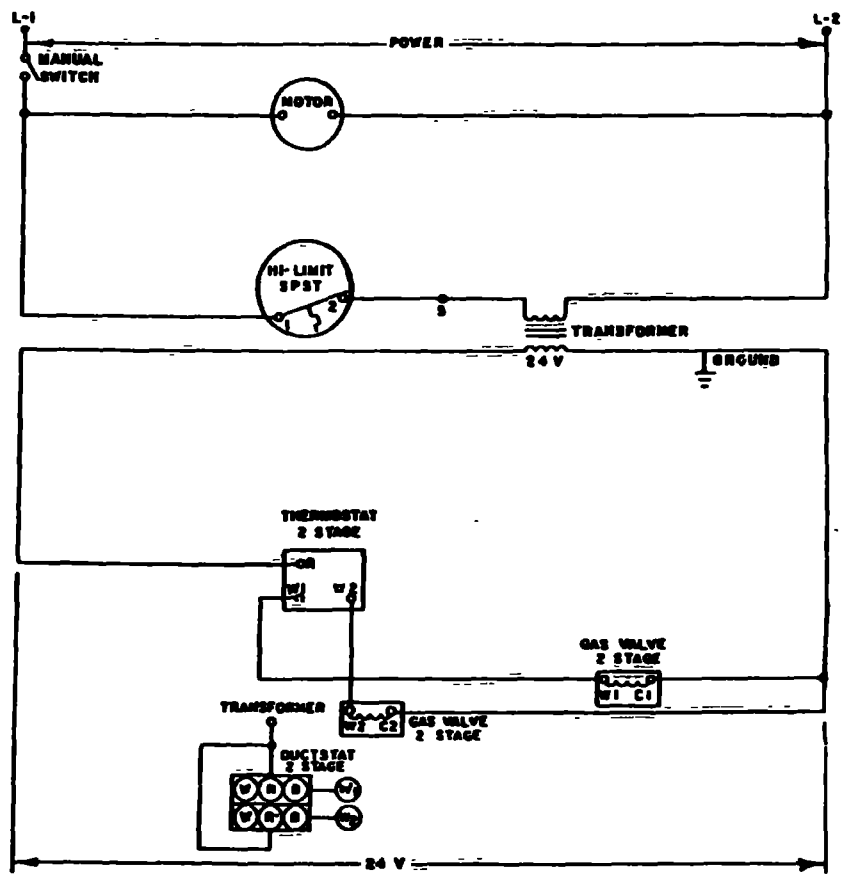

LINE DIAGRAM

WARNING
DISCONNECT ELECTRICAL POWER SOURCE TO PREVENT INJURY OR DEATH FROM ELECTRICAL SHOCK

CAUTION
USE COPPER CONDUCTORS ONLY TO PREVENT EQUIPMENT DAMAGE

GDNC-S/W-7

FIGURE 18 - Indoor Duct Furnace, Standing Pilot Ignition, Two Stage Gas Control, 115-230/60/1, Natural or LP Gas

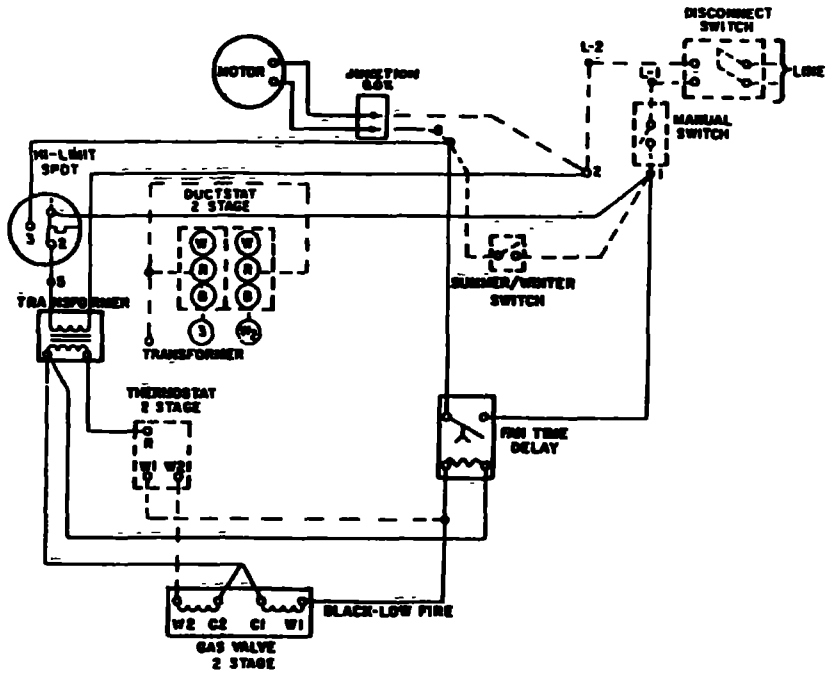

INTERCONNECTING DIAGRAM

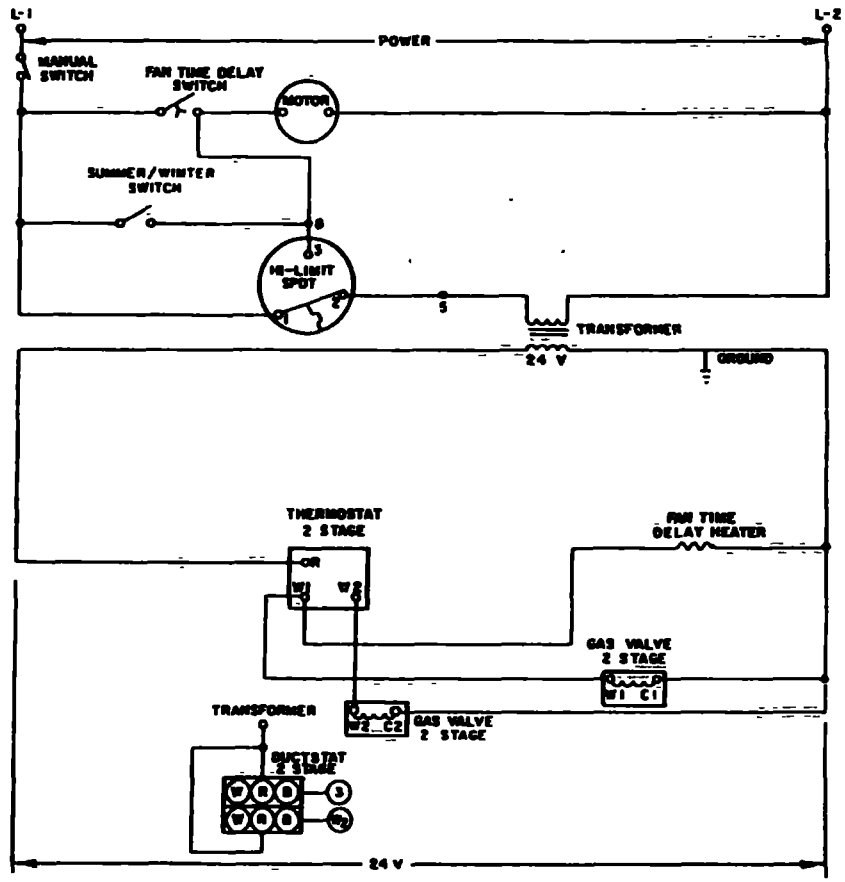

LINE DIAGRAM

WARNING

DISCONNECT ELECTRICAL POWER SOURCE TO PREVENT INJURY OR DEATH FROM ELECTRICAL SHOCK

CAUTION

USE COPPER CONDUCTORS ONLY TO PREVENT EQUIPMENT DAMAGE

GDNC-S/W-8

FIGURE 19 - Indoor Duct Furnace, Standing Pilot Ignition, Two Stage Gas Control, Horizontal Blower Assembly, Fan Time Delay, 115-230/60/1, Natural or LP Gas

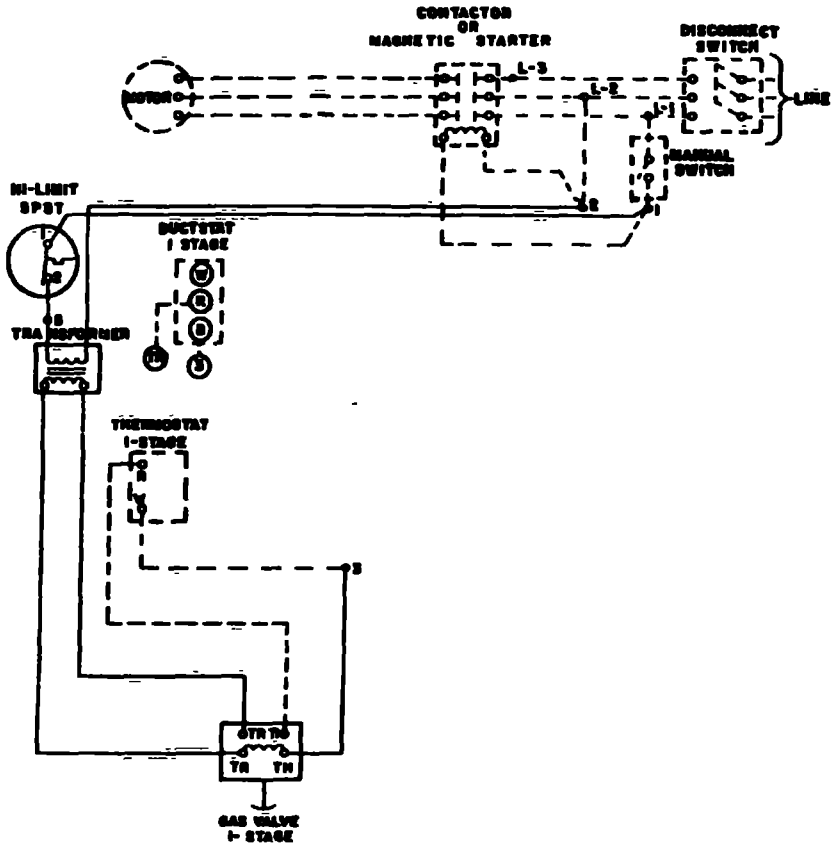

INTERCONNECTING DIAGRAM

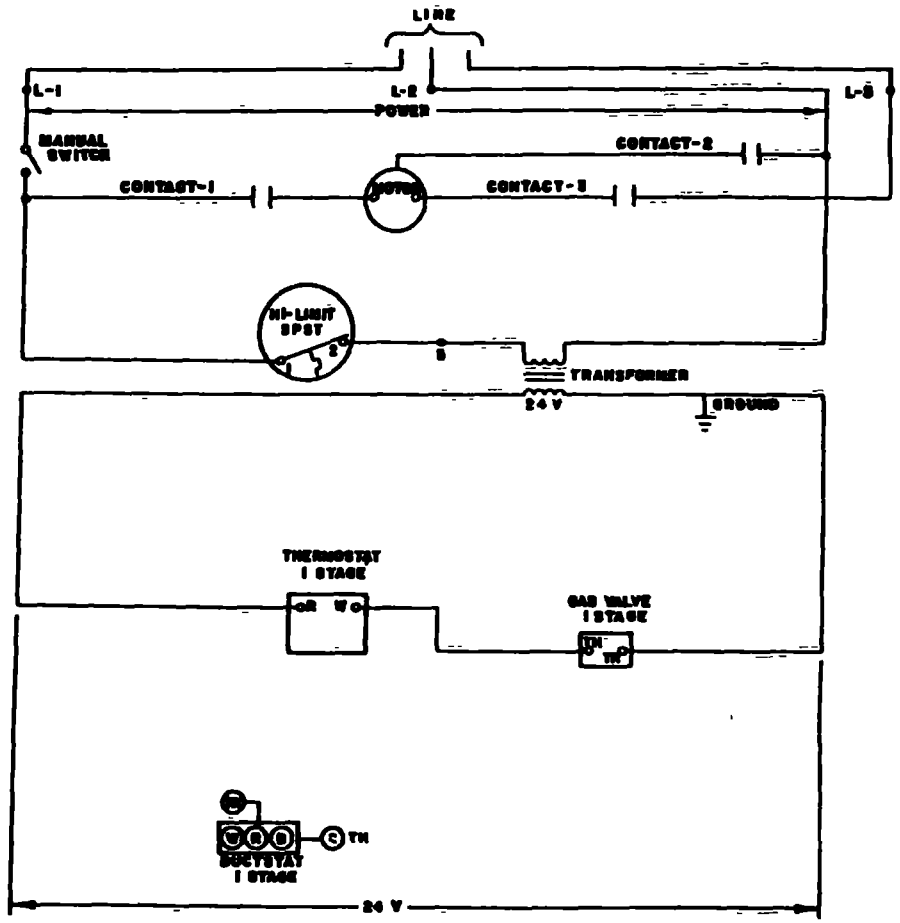

LINE DIAGRAM

WARNING

DISCONNECT ELECTRICAL POWER SOURCE TO PREVENT INJURY OR DEATH FROM ELECTRICAL SHOCK

CAUTION

USE COPPER CONDUCTORS ONLY TO PREVENT EQUIPMENT DAMAGE

GDNC-S/W-9

FIGURE 20 - Indoor Duct Furnace, Standing Pilot Ignition, Single Stage or Hydraulic Modulating Gas Control, 208-230/60/3, Natural or LP Gas

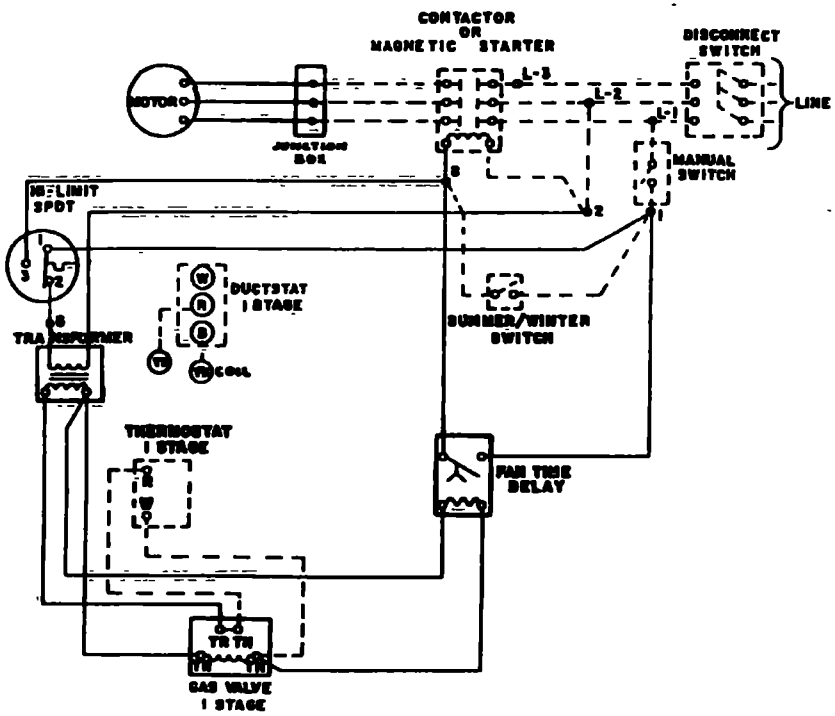

INTERCONNECTING DIAGRAM

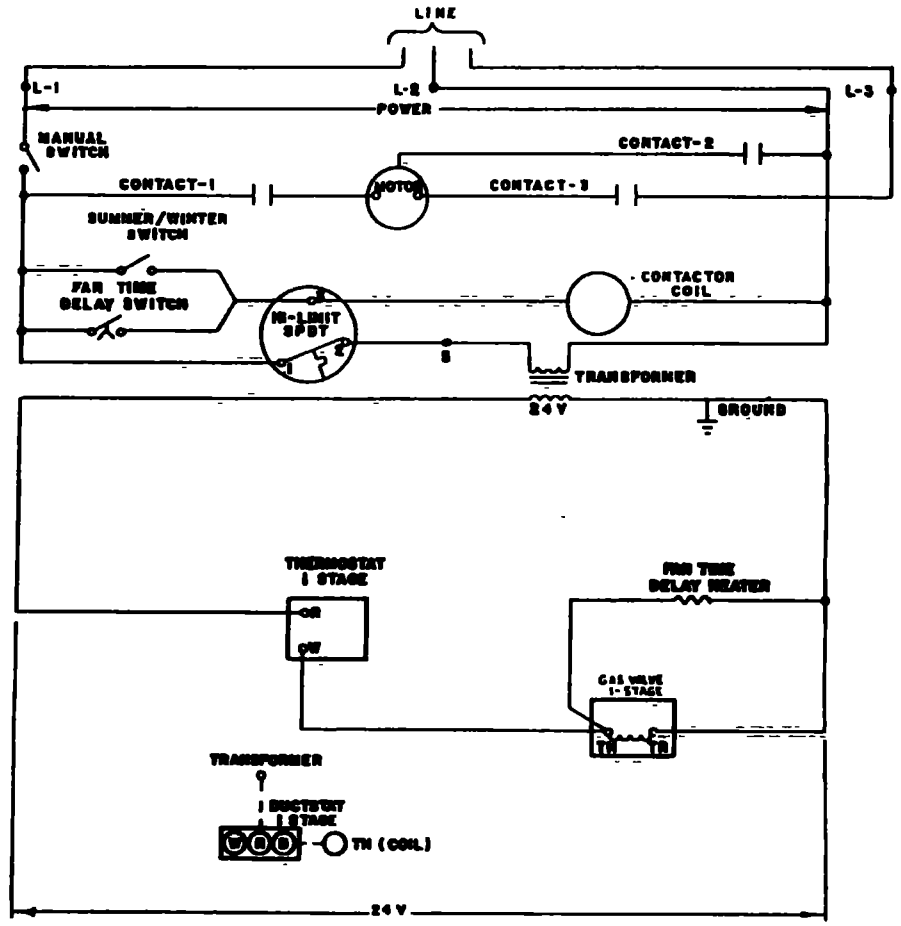

LINE DIAGRAM

WARNING

DISCONNECT ELECTRICAL POWER SOURCE TO PREVENT INJURY OR DEATH FROM ELECTRICAL SHOCK

CAUTION

USE COPPER CONDUCTORS ONLY TO PREVENT EQUIPMENT DAMAGE

GDNC-S/W-10

FIGURE 21 - Indoor Duct Furnace, Standing Pilot Ignition, Single Stage or Hydraulic Modulating Gas Control, Horizontal Blower Assembly, Fan Time Delay, 208-230/60/3, Natural or LP Gas

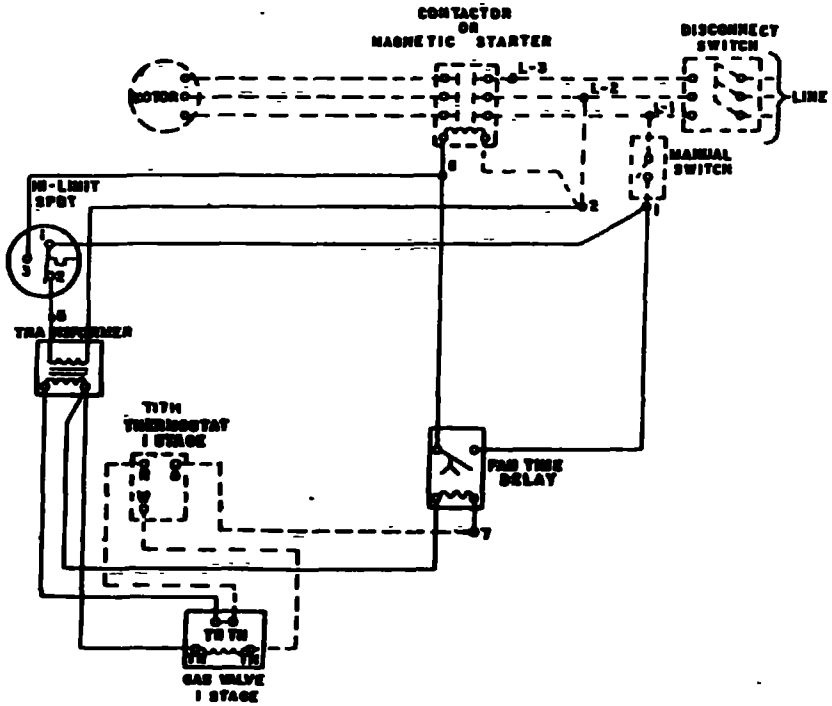

INTERCONNECTING DIAGRAM

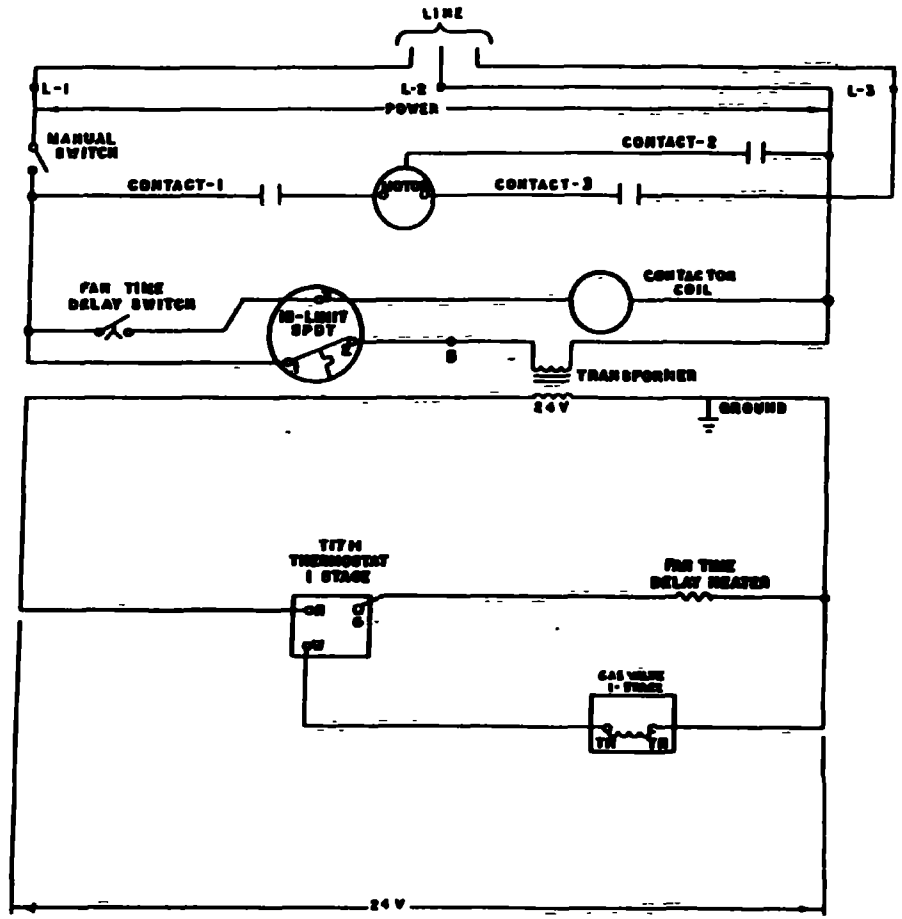

LINE DIAGRAM

WARNING

DISCONNECT ELECTRICAL POWER SOURCE TO PREVENT INJURY OR DEATH FROM ELECTRICAL SHOCK

CAUTION

USE COPPER CONDUCTORS ONLY TO PREVENT EQUIPMENT DAMAGE

GDNC-S/W-11

FIGURE 22 - Indoor Duct Furnace, Standing Pilot Ignition, Single Stage or Hydraulic Modulating Gas Control, Thermostat with Fan Switch, Fan Time Delay, 208-230/60/3, Natural or LP Gas

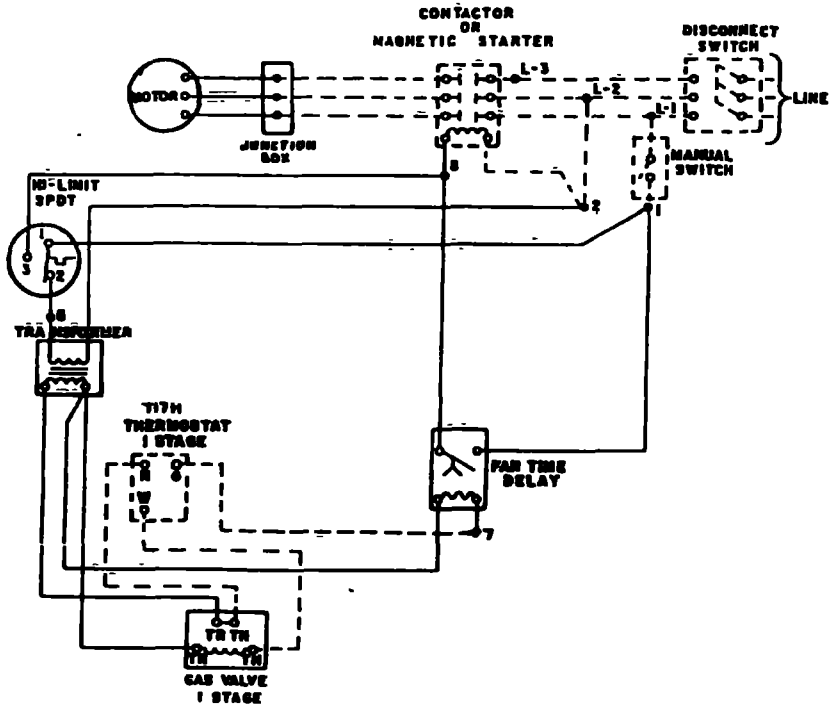

INTERCONNECTING DIAGRAM

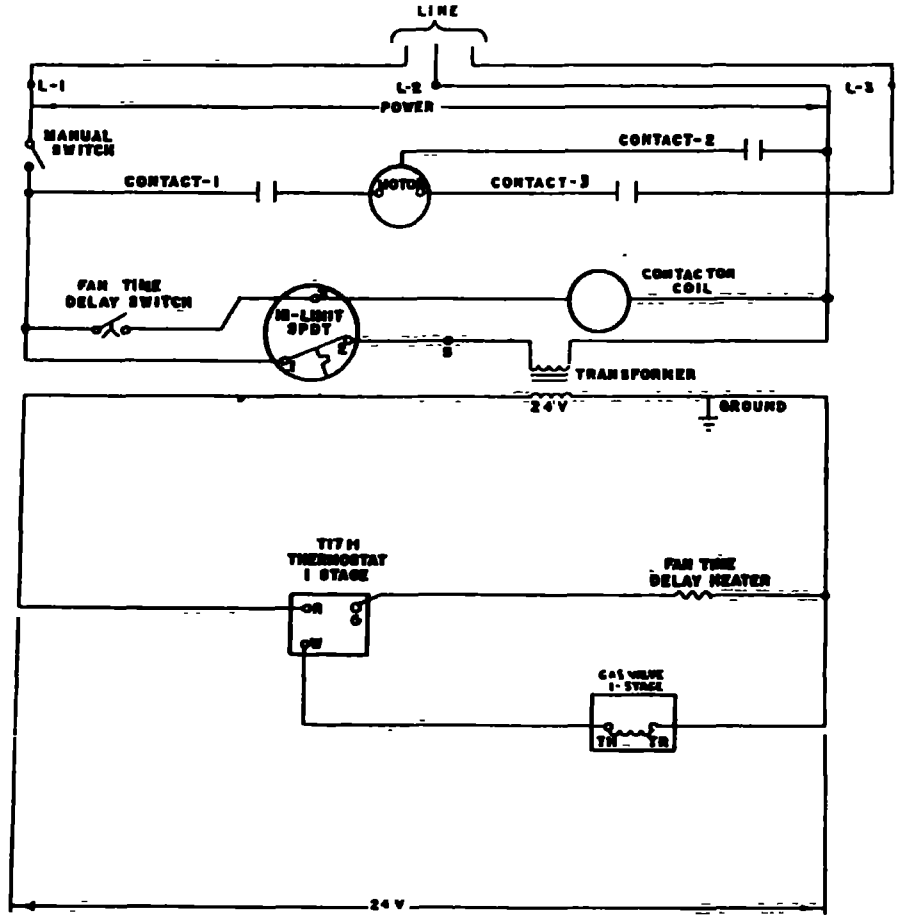

LINE DIAGRAM

WARNING

DISCONNECT ELECTRICAL POWER SOURCE TO PREVENT INJURY OR DEATH FROM ELECTRICAL SHOCK

CAUTION

USE COPPER CONDUCTORS ONLY TO PREVENT EQUIPMENT DAMAGE

GDNC-S/W-12

FIGURE 23 - Indoor Duct Furnace, Standing Pilot Ignition, Single Stage or Hydraulic Modulating Gas Control, Horizontal Blower Assembly, Fan Time Delay, Thermostat with Fan Switch, 208-230/60/3, Natural or LP Gas

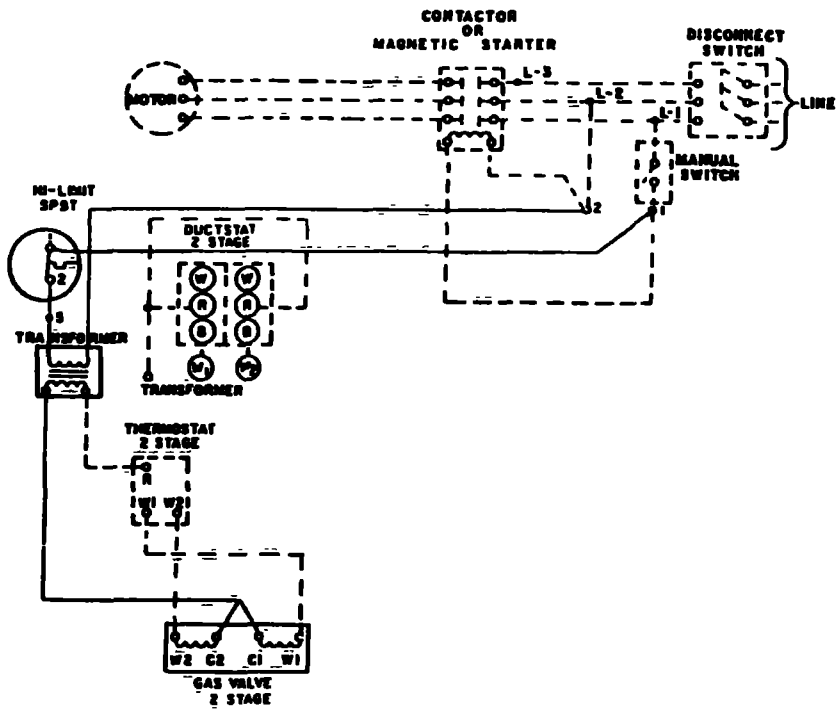

INTERCONNECTING DIAGRAM

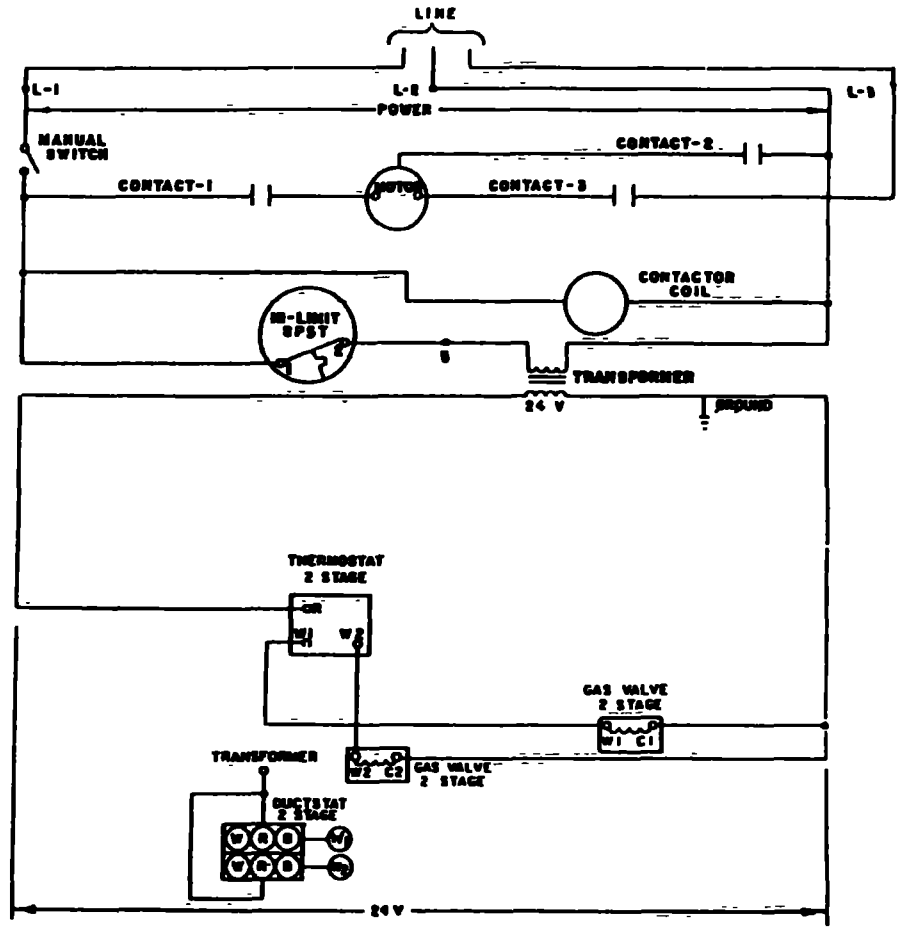

LINE DIAGRAM

WARNING

DISCONNECT ELECTRICAL POWER SOURCE TO PREVENT INJURY OR DEATH FROM ELECTRICAL SHOCK

CAUTION

USE COPPER CONDUCTORS ONLY TO PREVENT EQUIPMENT DAMAGE

GDNC-S/W-13

FIGURE 24 - Indoor Duct Furnace, Standing Pilot Ignition, Two Stage Gas Control, 208-230/60/3, Natural or LP Gas

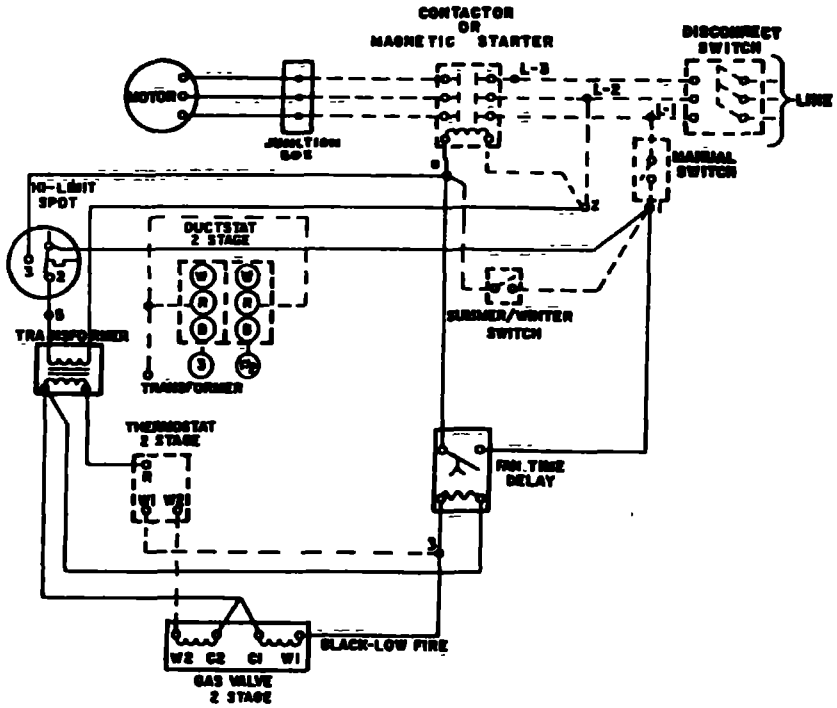

INTERCONNECTING DIAGRAM

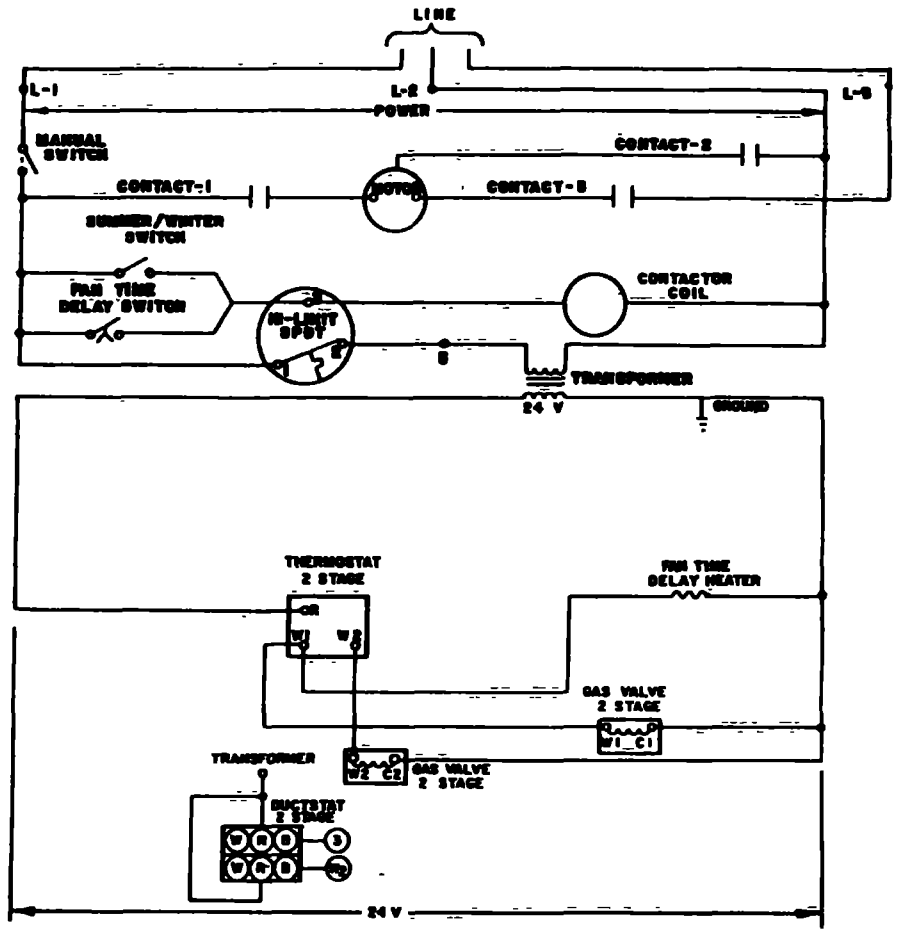

LINE DIAGRAM

WARNING

DISCONNECT ELECTRICAL POWER SOURCE TO PREVENT INJURY OR DEATH FROM ELECTRICAL SHOCK

CAUTION

USE COPPER CONDUCTORS ONLY TO PREVENT EQUIPMENT DAMAGE

GDNC-S/W-14

FIGURE 25 - Indoor Duct Furnace, Standing Pilot Ignition, Two Stage Gas Control, Horizontal Blower Assembly, Fan Time Delay, 208-230/60/3, Natural or LP Gas

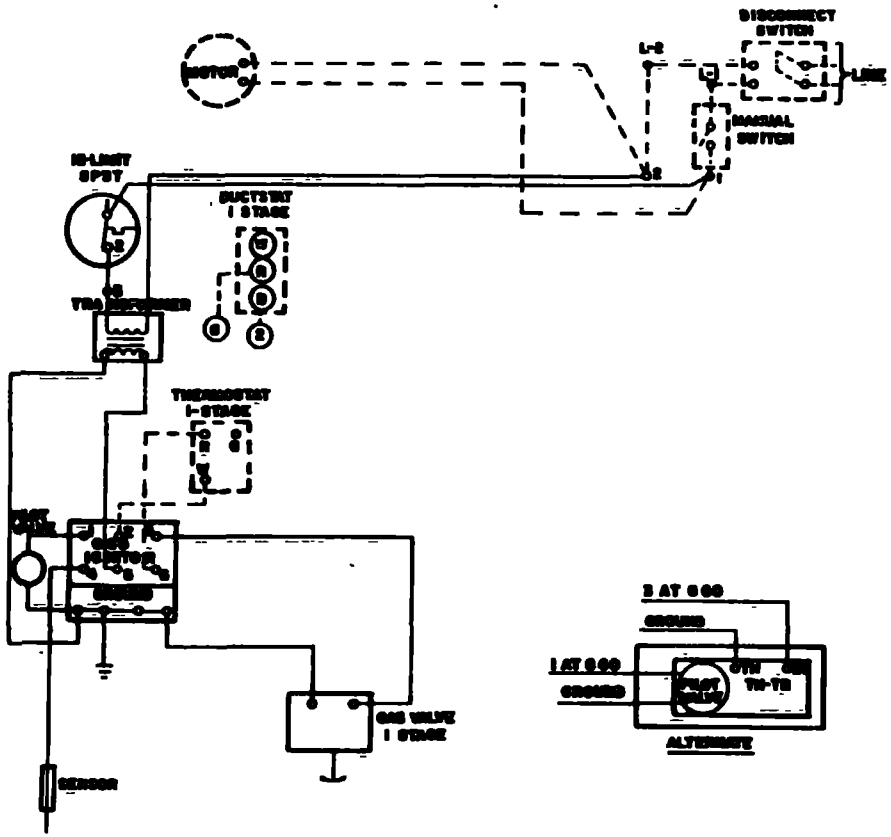

INTERCONNECTING DIAGRAM

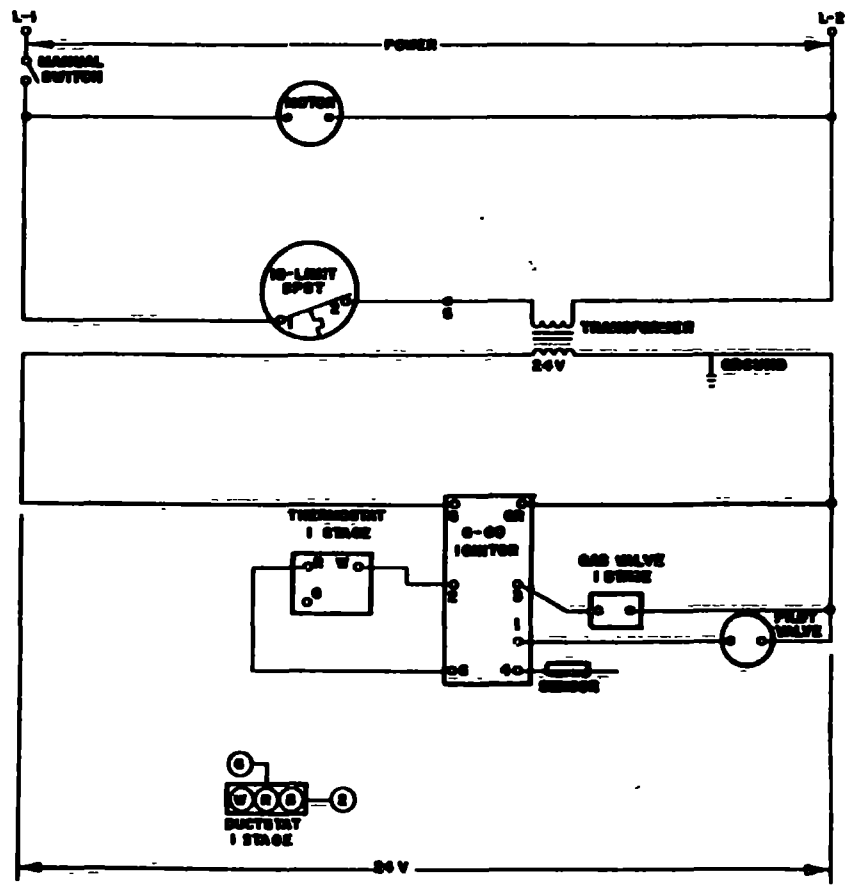

LINE DIAGRAM

WARNING

DISCONNECT ELECTRICAL POWER SOURCE TO PREVENT INJURY OR DEATH FROM ELECTRICAL SHOCK

CAUTION

USE COPPER CONDUCTORS ONLY TO PREVENT EQUIPMENT DAMAGE

GDNC-S/W-15

FIGURE 28 - Indoor Duct Furnace, Intermittent Pilot Ignition, Single Stage or Hydraulic Modulating Gas Control, 115-230/60/1, Natural Gas

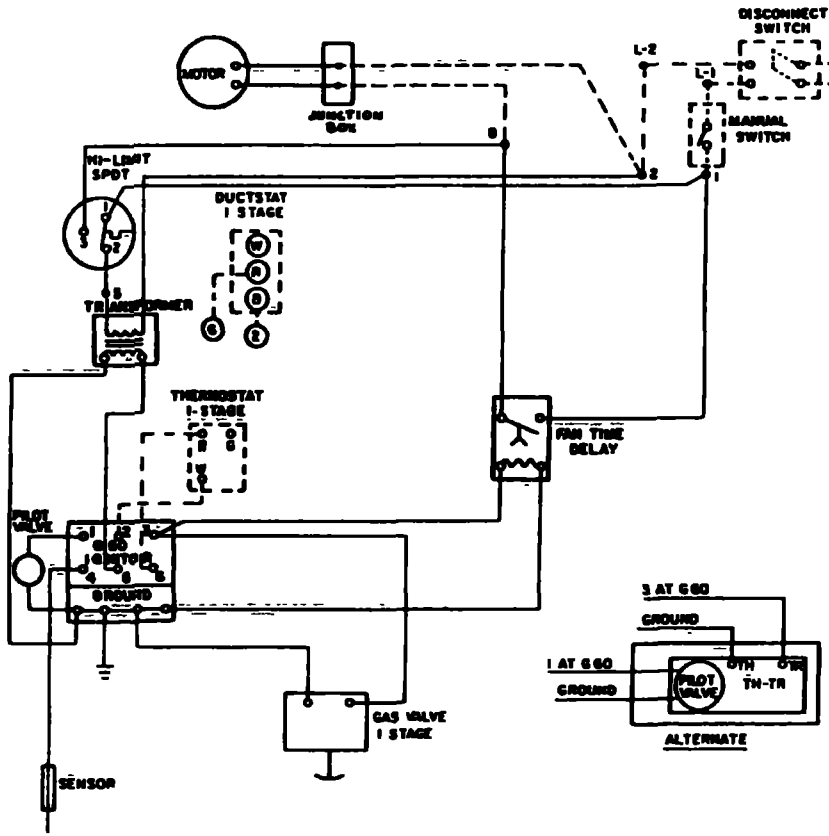

INTERCONNECTING DIAGRAM

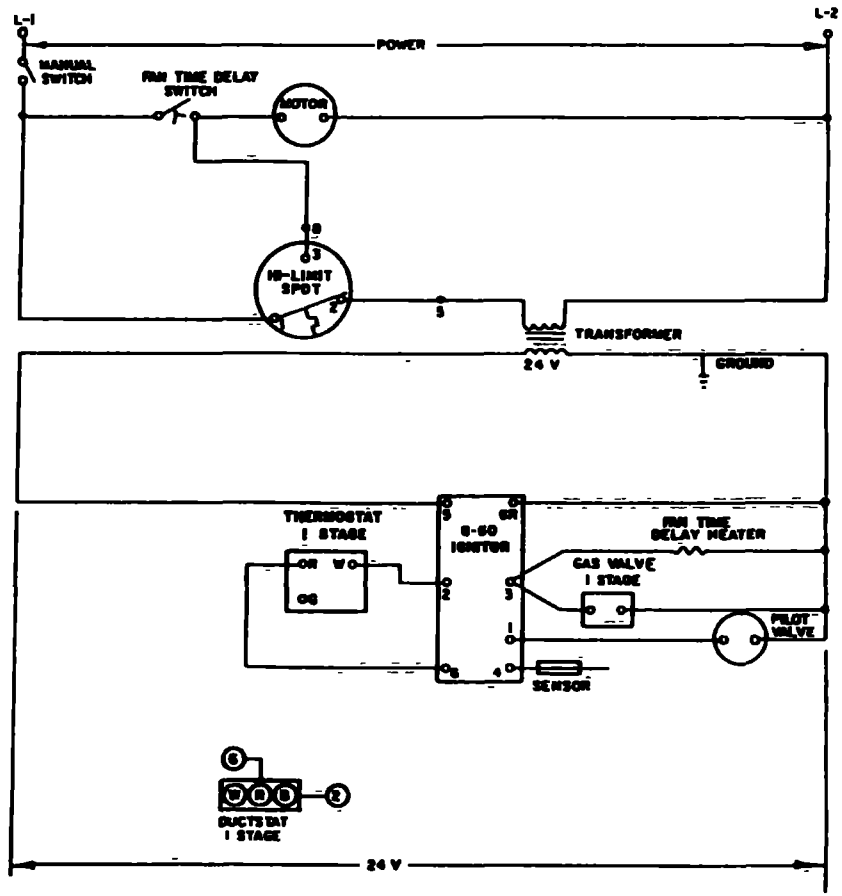

LINE DIAGRAM

WARNING

DISCONNECT ELECTRICAL POWER SOURCE TO PREVENT INJURY OR DEATH FROM ELECTRICAL SHOCK

CAUTION

USE COPPER CONDUCTORS ONLY TO PREVENT EQUIPMENT DAMAGE

GDNC-S/W-16

Figure 27 - Indoor Duct Furnace, Intermittent Pilot Ignition, Single Stage or Hydraulic Modulating Gas Control, Horizontal Blower Assembly, Fan Time Delay, 115-230/60/1, Natural Gas

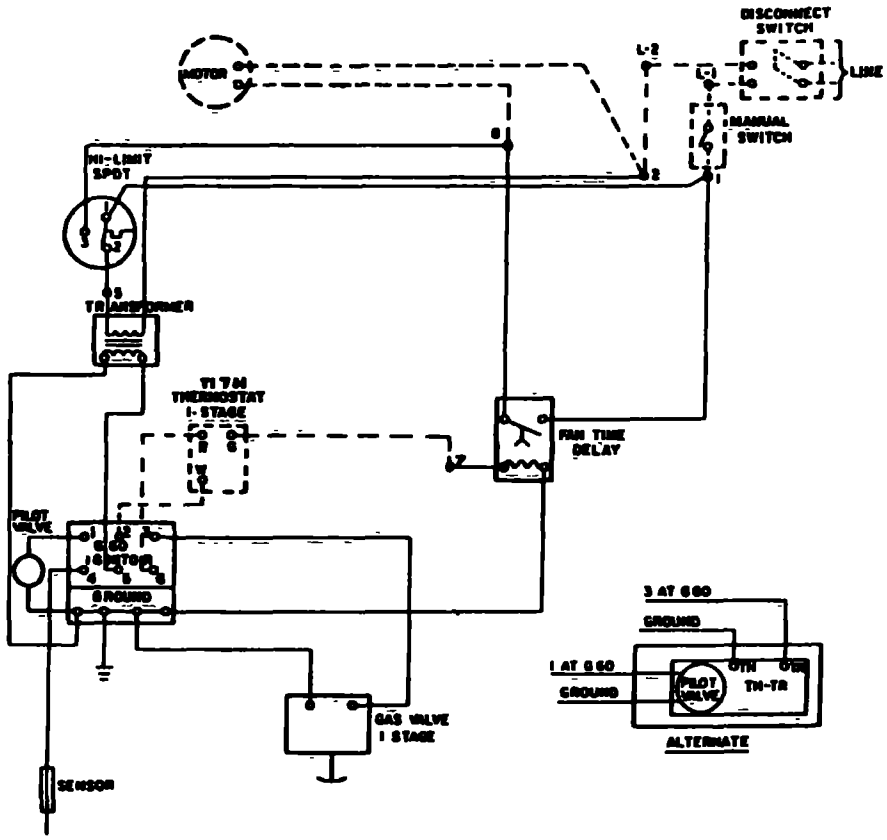

INTERCONNECTING DIAGRAM

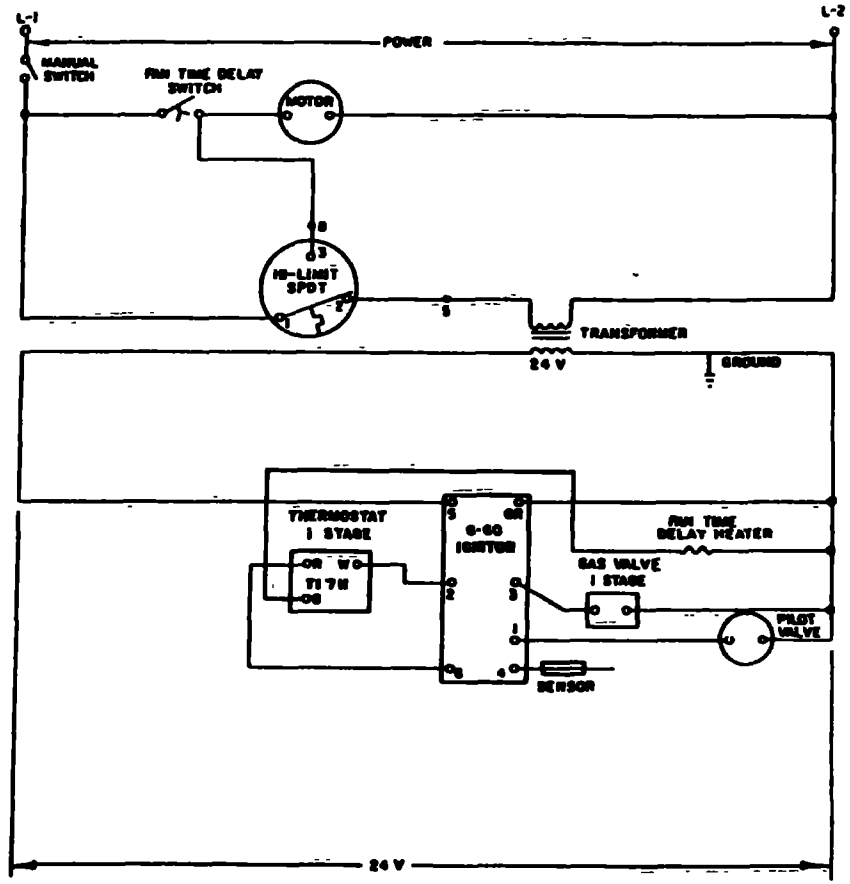

LINE DIAGRAM

WARNING
DISCONNECT ELECTRICAL POWER SOURCE TO PREVENT INJURY OR DEATH FROM ELECTRICAL SHOCK

CAUTION
USE COPPER CONDUCTORS ONLY TO PREVENT EQUIPMENT DAMAGE

GDNC-S/W-17

FIGURE 28 - Indoor Duct Furnace, Intermittent Pilot Ignition, Single Stage or Hydraulic Modulating Gas Control, Thermostat with Fan Switch, Fan Time Delay, 115-230/60/1, Natural Gas

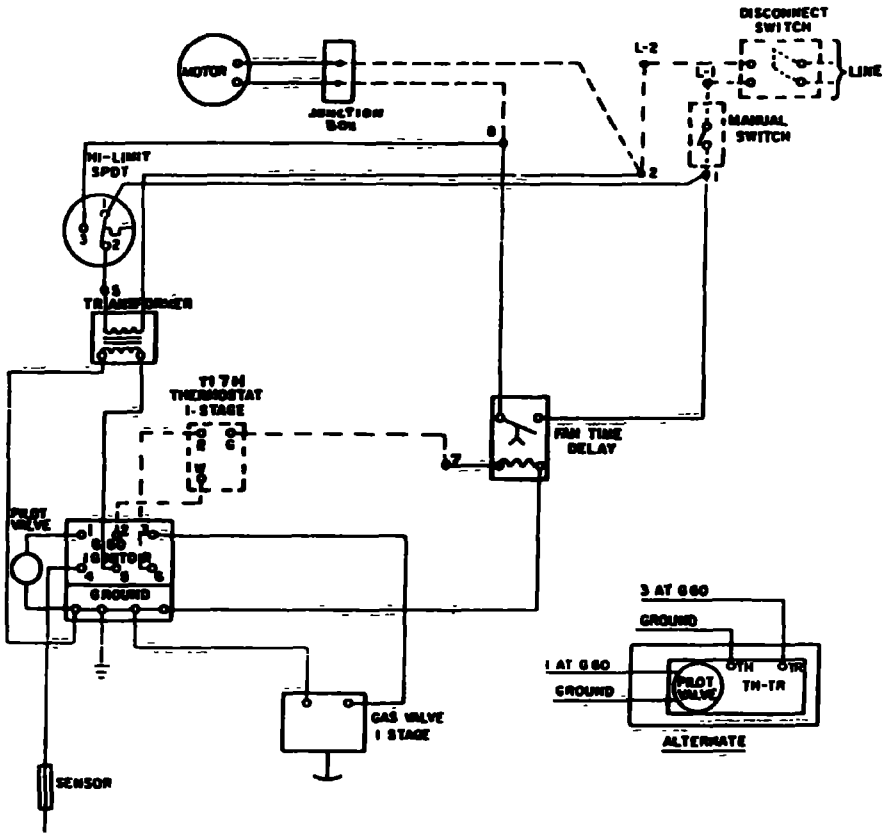

INTERCONNECTING DIAGRAM

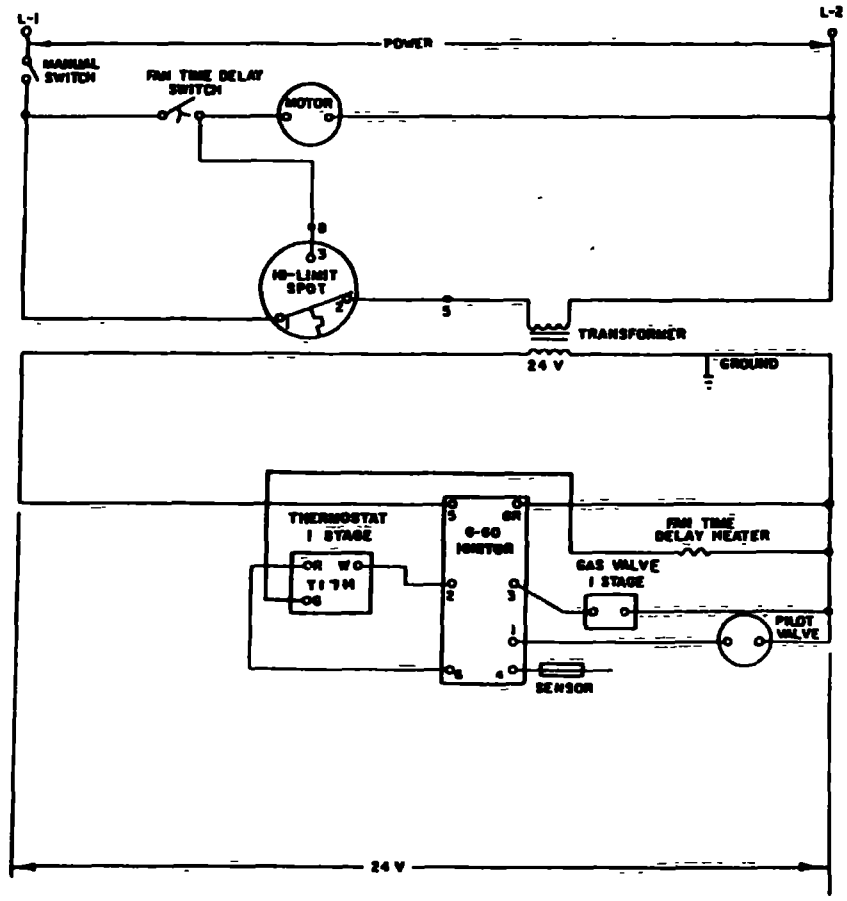

LINE DIAGRAM

WARNING

DISCONNECT ELECTRICAL POWER SOURCE TO PREVENT INJURY OR DEATH FROM ELECTRICAL SHOCK

CAUTION

USE COPPER CONDUCTORS ONLY TO PREVENT EQUIPMENT DAMAGE

GDNC-S/W-18

FIGURE 29 - Indoor Duct Furnace, Intermittent Pilot Ignition, Single Stage or Hydraulic Modulating Gas Control, Horizontal Blower Assembly, Fan Time Delay, Thermostat with Fan Switch, 115-230/60/1, Natural Gas

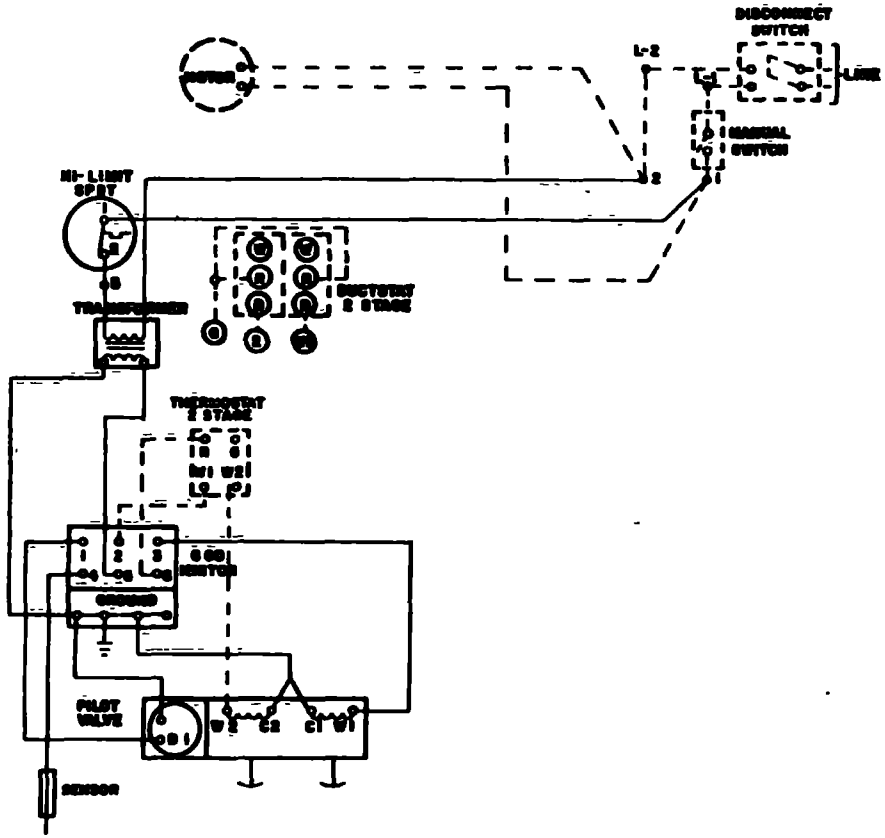

INTERCONNECTING DIAGRAM

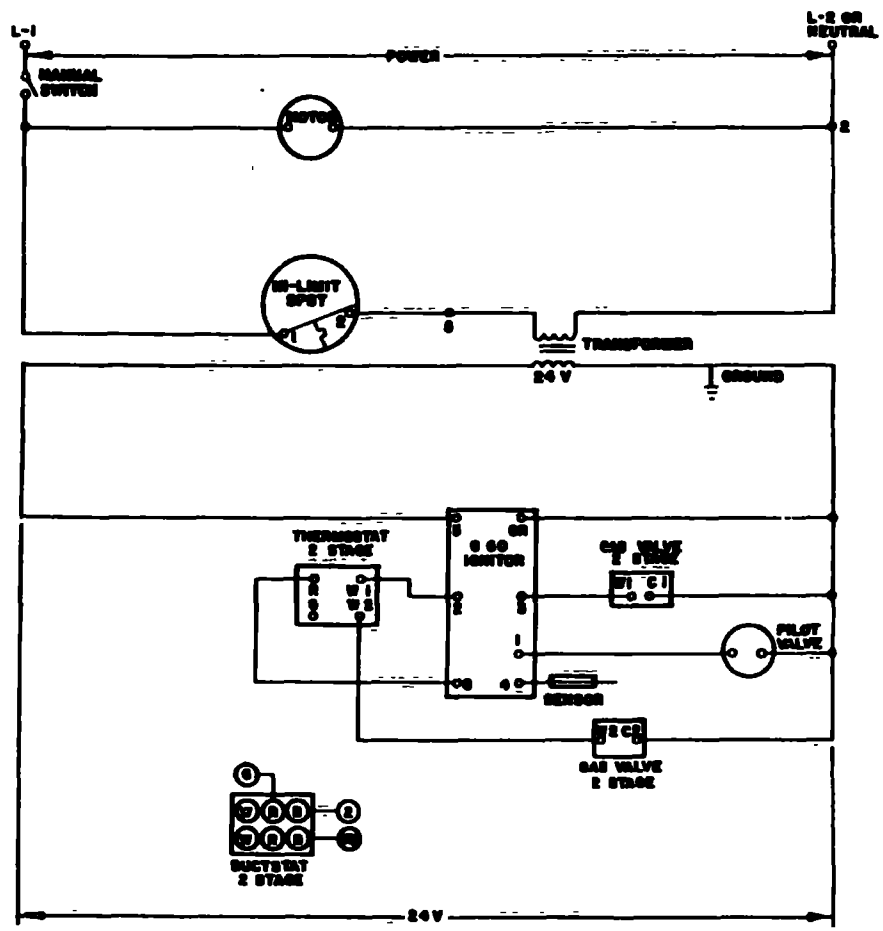

LINE DIAGRAM

WARNING
DISCONNECT ELECTRICAL POWER SOURCE TO PREVENT INJURY OR DEATH FROM ELECTRICAL SHOCK

CAUTION
USE COPPER CONDUCTORS ONLY TO PREVENT EQUIPMENT DAMAGE

GDNC-S/W-19

FIGURE 30 - Indoor Duct Furnace, Intermittent Pilot Ignition, Two Stage Gas Control, 115-230/60/1, Natural Gas

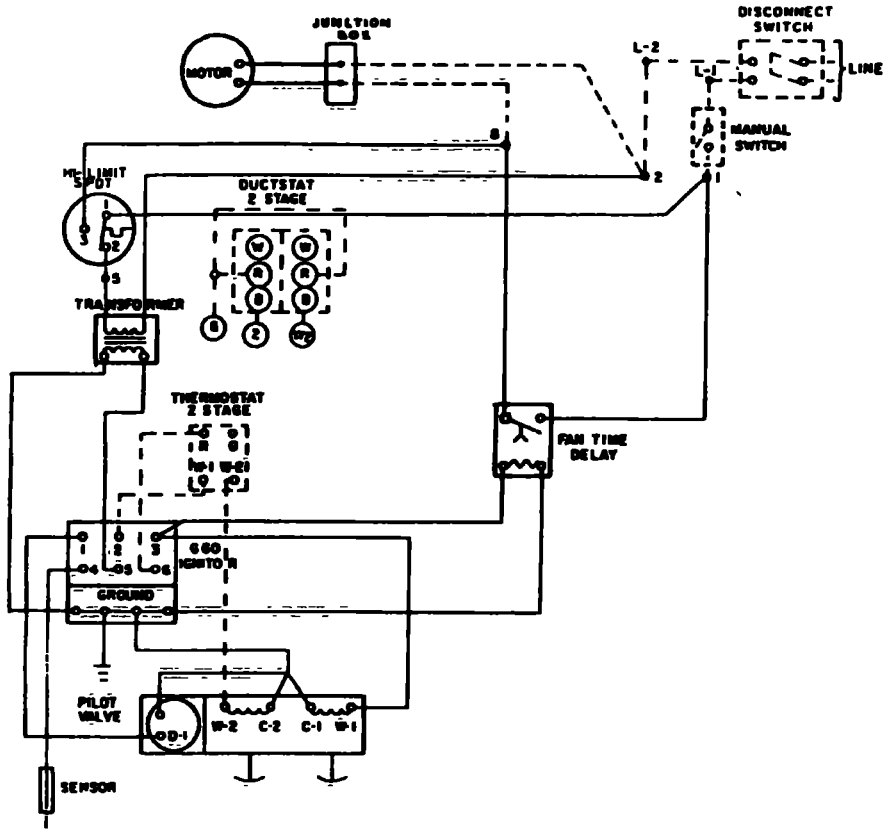

INTERCONNECTING DIAGRAM

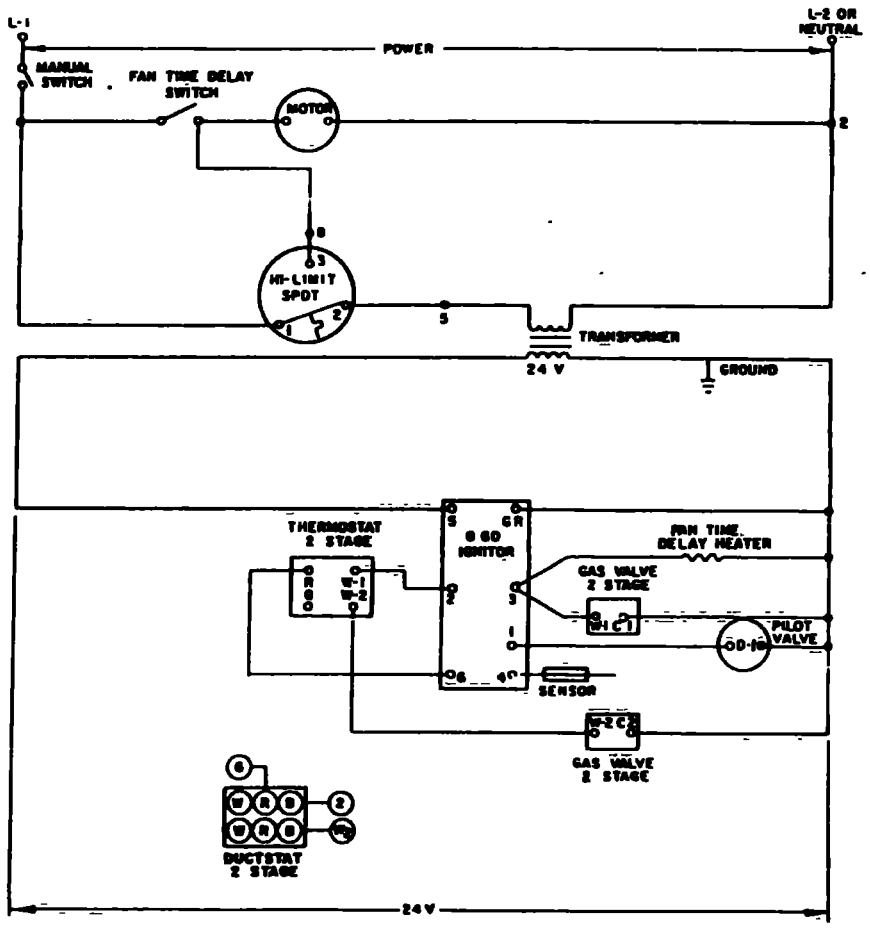

LINE DIAGRAM

WARNING
DISCONNECT ELECTRICAL POWER SOURCE TO PREVENT INJURY OR DEATH FROM ELECTRICAL SHOCK

CAUTION
USE COPPER CONDUCTORS ONLY TO PREVENT EQUIPMENT DAMAGE

GDNC-S/W-20

FIGURE 31 - Indoor Duct Furnace, Intermittent Pilot Ignition, Two Stage Gas Control, Horizontal Blower Assembly, Fan Time Delay, 115-230/60/1, Natural Gas

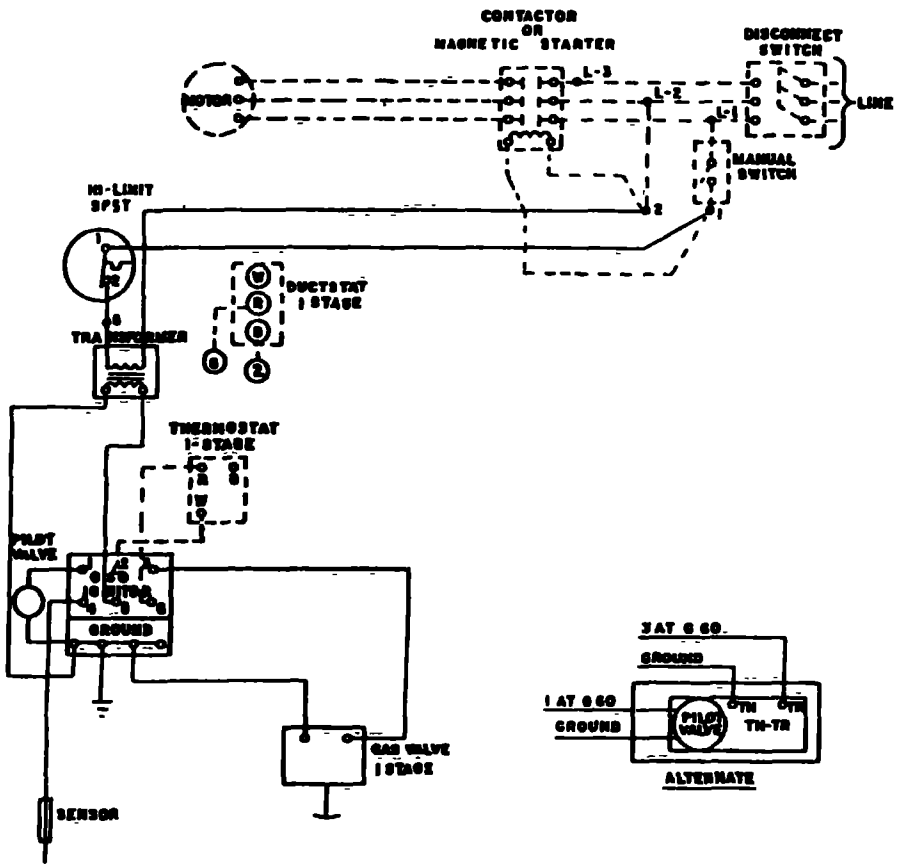

INTERCONNECTING DIAGRAM

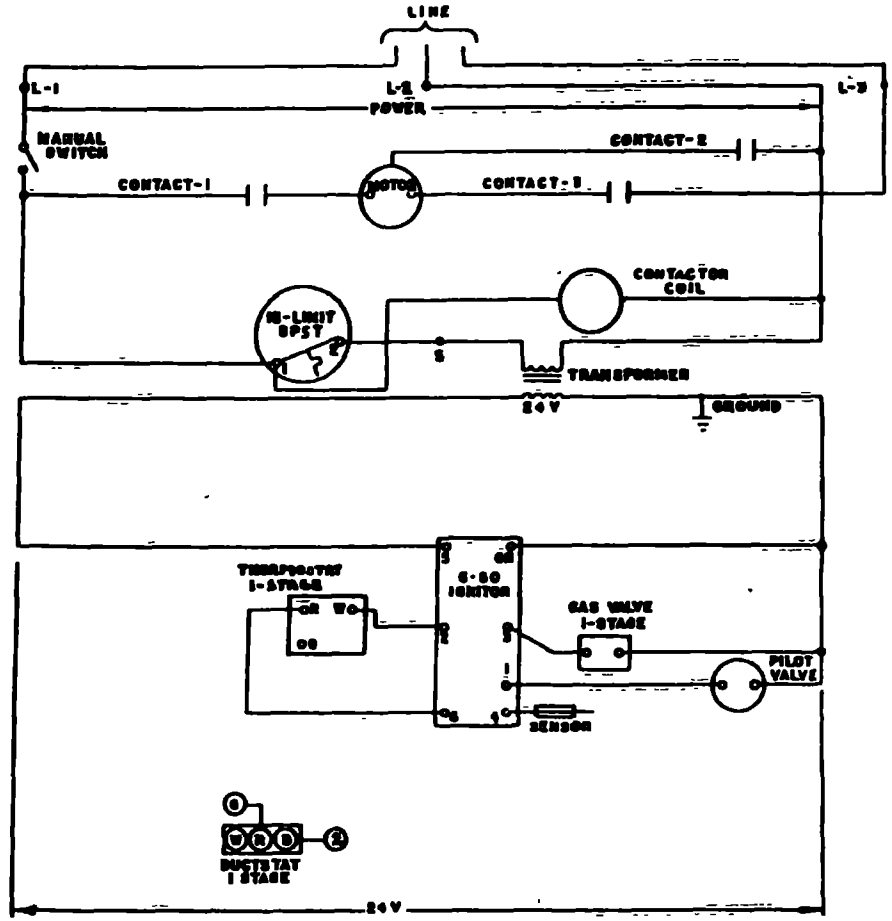

LINE DIAGRAM

WARNING

DISCONNECT ELECTRICAL POWER SOURCE TO PREVENT INJURY OR DEATH FROM ELECTRICAL SHOCK

CAUTION

USE COPPER CONDUCTORS ONLY TO PREVENT EQUIPMENT DAMAGE

GDNC-S/W-21

FIGURE 32 - Indoor Duct Furnace, Intermittent Pilot Ignition, Single Stage or Hydraulic Modulating Gas Control, 208-230/60/3, Natural Gas

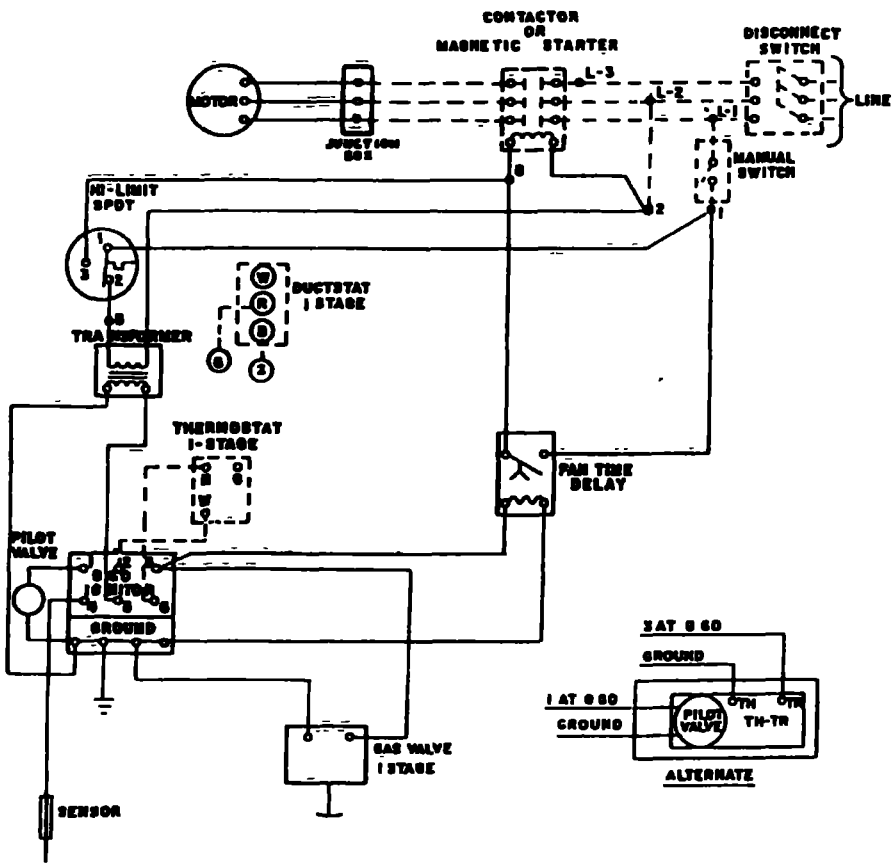

INTERCONNECTING DIAGRAM

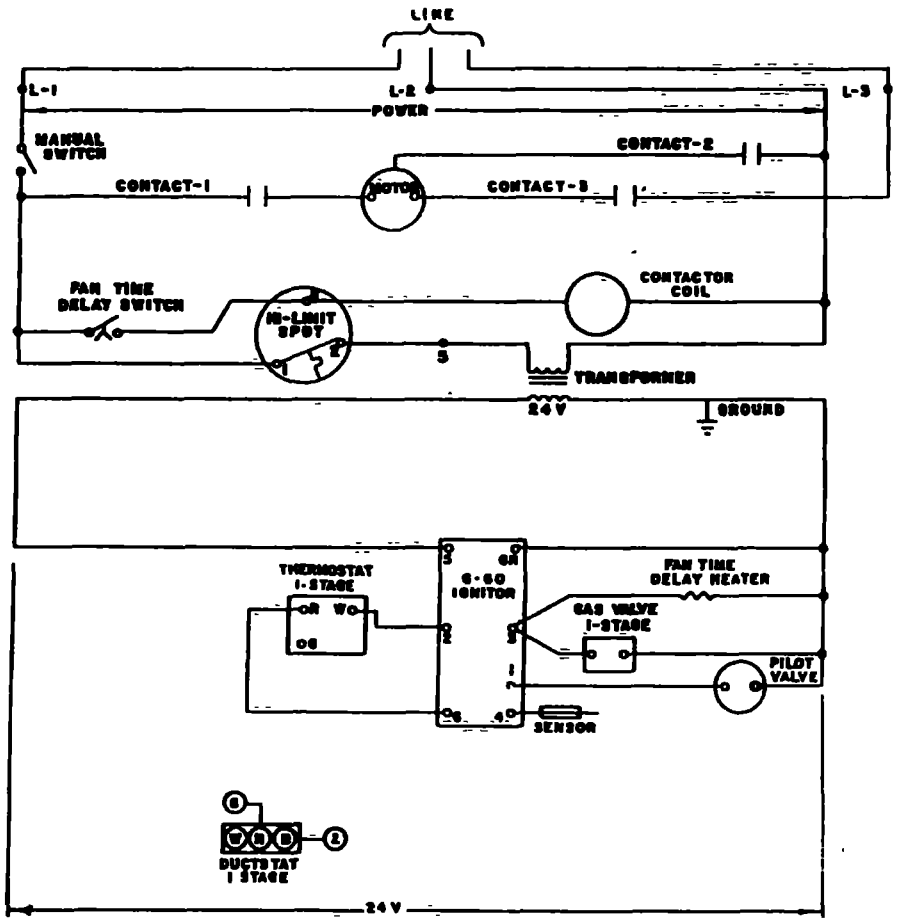

LINE DIAGRAM

WARNING
DISCONNECT ELECTRICAL POWER SOURCE TO PREVENT INJURY OR DEATH FROM ELECTRICAL SHOCK

CAUTION
USE COPPER CONDUCTORS ONLY TO PREVENT EQUIPMENT DAMAGE

GDNC-S/W-24

GDNC-S/W-22

FIGURE 33 - Indoor Duct Furnace, Intermittent Pilot Ignition, Single Stage or Hydraulic Modulating Gas Control, Horizontal Blower Assembly, Fan Time Delay, 208-230/60/3, Natural Gas

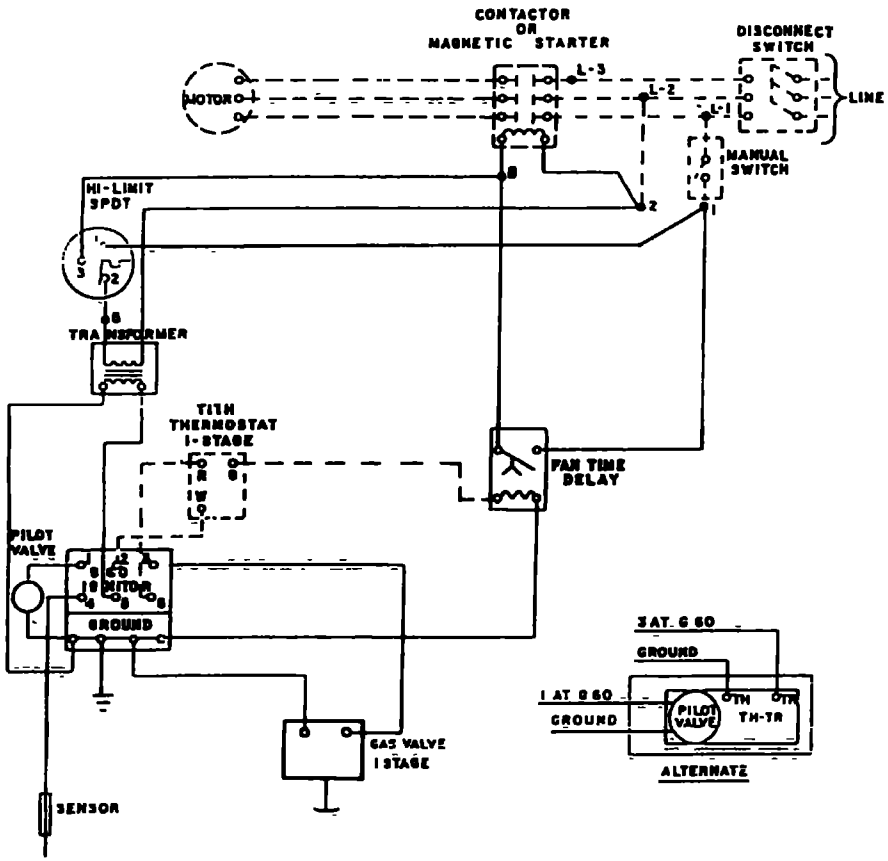

INTERCONNECTING DIAGRAM

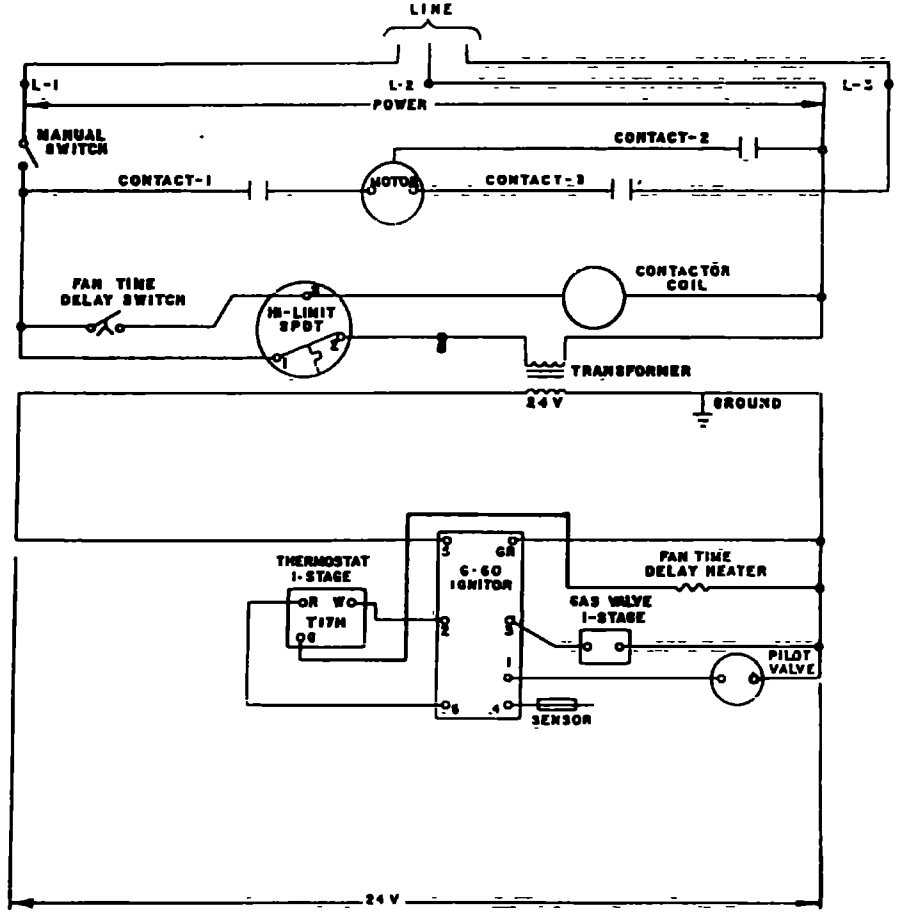

LINE DIAGRAM

WARNING
DISCONNECT ELECTRICAL POWER SOURCE TO PREVENT INJURY OR DEATH FROM ELECTRICAL SHOCK

CAUTION
USE COPPER CONDUCTORS ONLY TO PREVENT EQUIPMENT DAMAGE

GDNC-S/W-23

FIGURE 34 - Indoor Duct Furnace, Intermittent Pilot Ignition, Single Stage or Hydraulic Modulating Gas Control, Thermostat with Fan Switch, Fan Time Delay, 208-230/60/3, Natural Gas

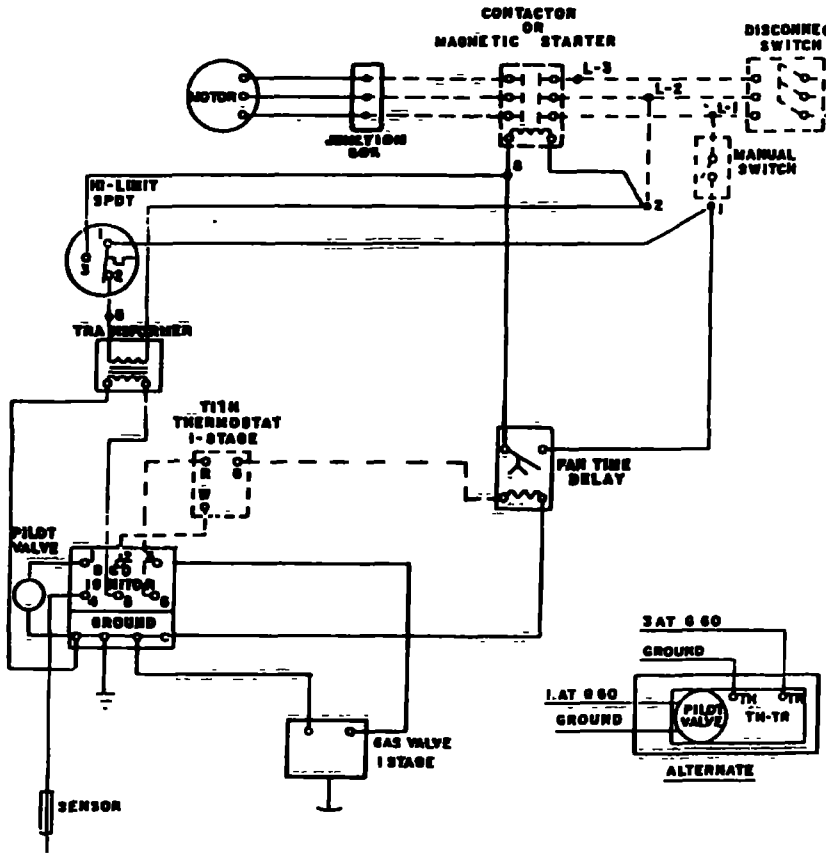

INTERCONNECTING DIAGRAM

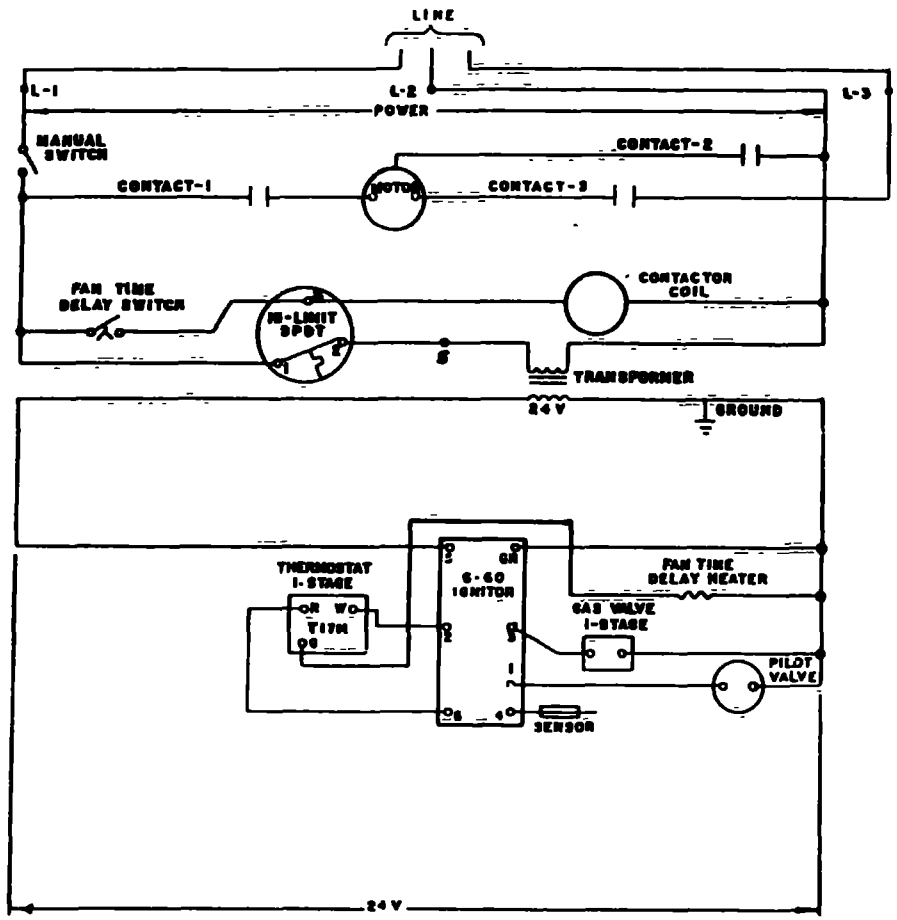

LINE DIAGRAM

WARNING
DISCONNECT ELECTRICAL POWER SOURCE TO PREVENT INJURY OR DEATH FROM ELECTRICAL SHOCK

CAUTION
USE COPPER CONDUCTORS ONLY TO PREVENT EQUIPMENT DAMAGE

FIGURE 35 - Indoor Duct Furnace, Intermittent Pilot Ignition, Single Stage or Hydraulic Modulating Gas Control, Thermostat with Fan Switch, Horizontal Blower Assembly, Fan Time Delay, 208-230/60/3, Natural Gas

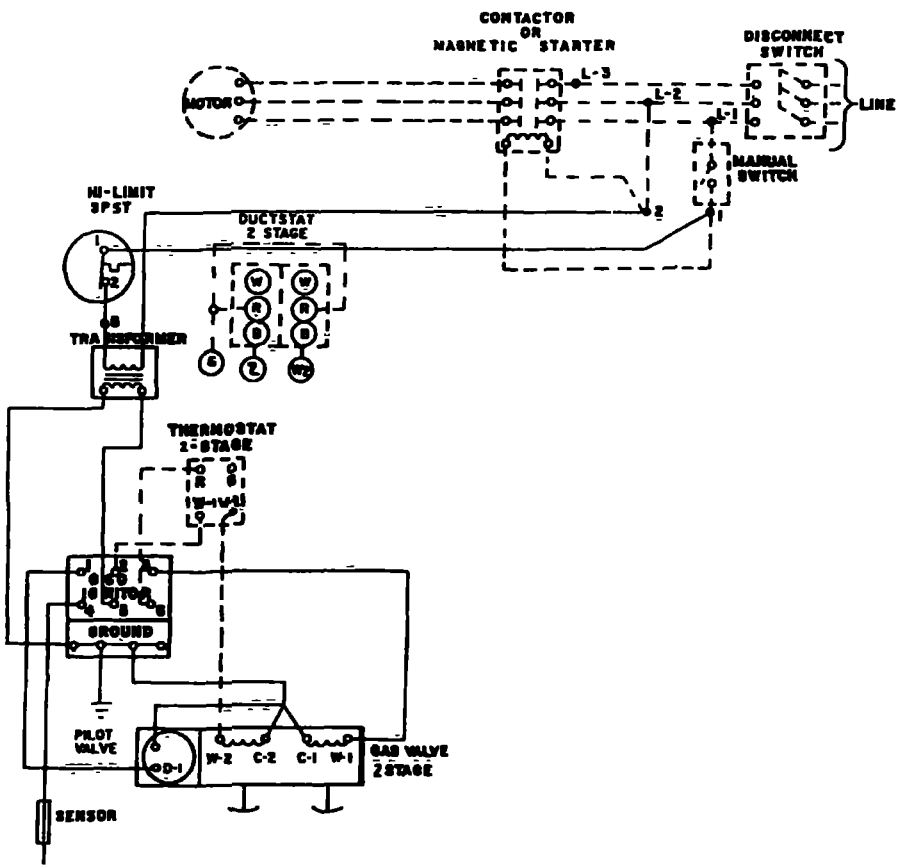

INTERCONNECTING DIAGRAM

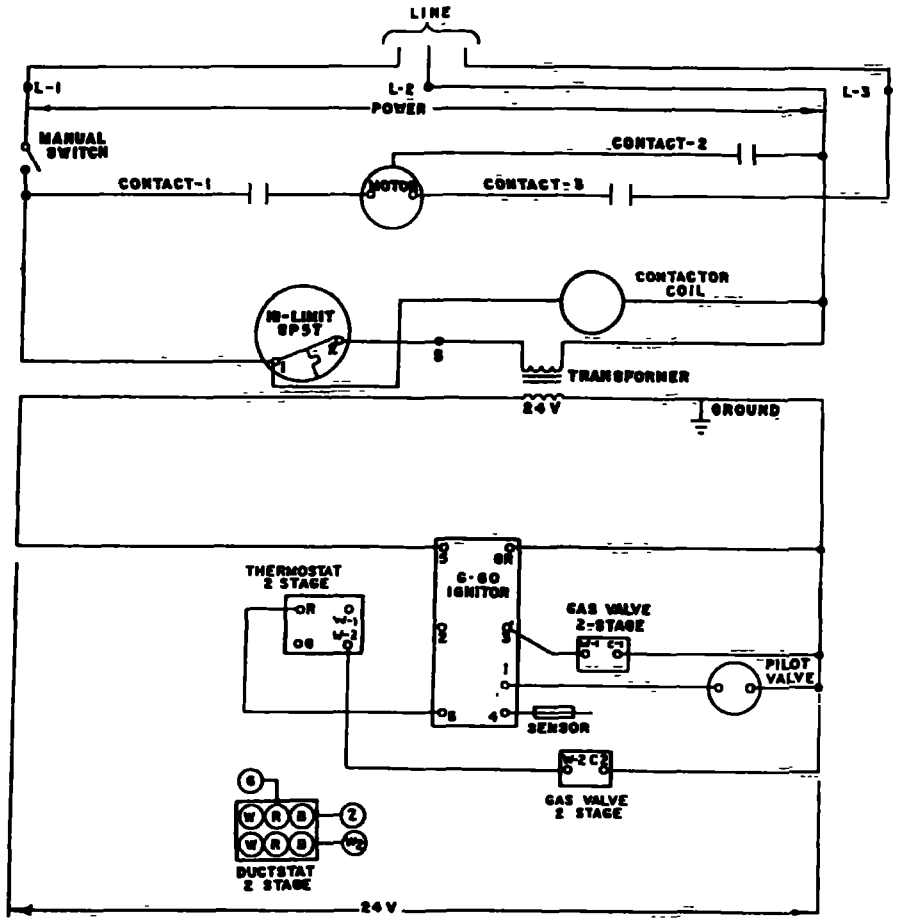

LINE DIAGRAM

WARNING
DISCONNECT ELECTRICAL POWER SOURCE TO PREVENT INJURY OR DEATH FROM ELECTRICAL SHOCK

CAUTION
USE COPPER CONDUCTORS ONLY TO PREVENT EQUIPMENT DAMAGE

GDNC-S/W-25

FIGURE 36 - Indoor Duct Furnace, Intermittent Pilot Ignition, Two Stage Gas Control, 208-230/60/3, Natural Gas

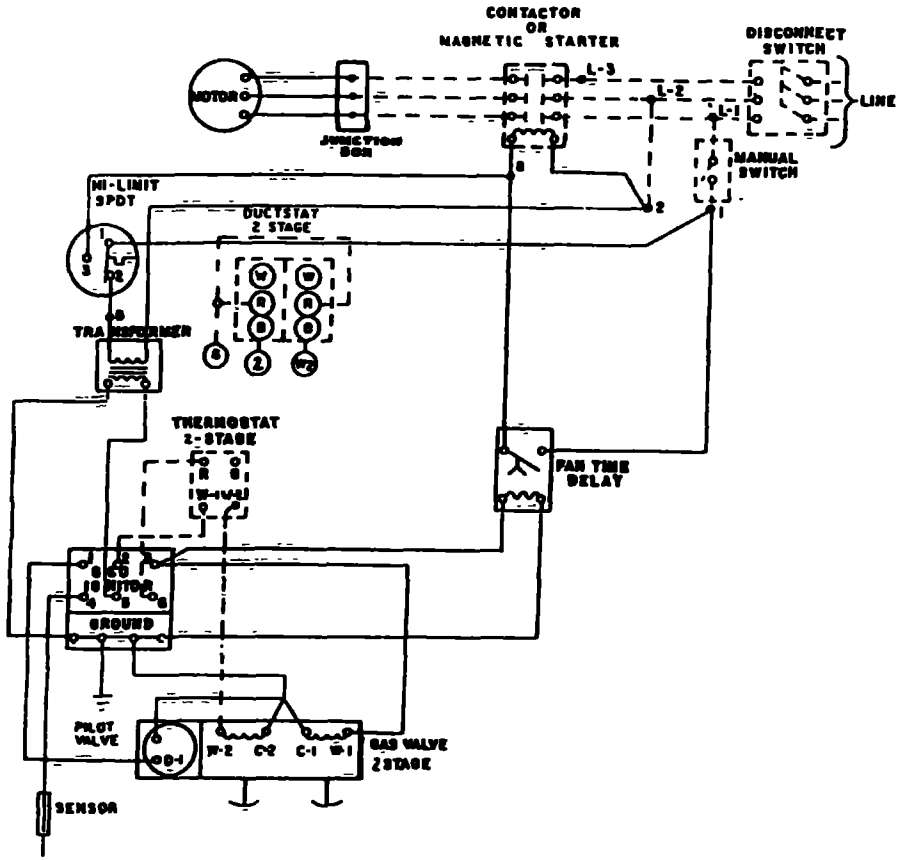

INTERCONNECTING DIAGRAM

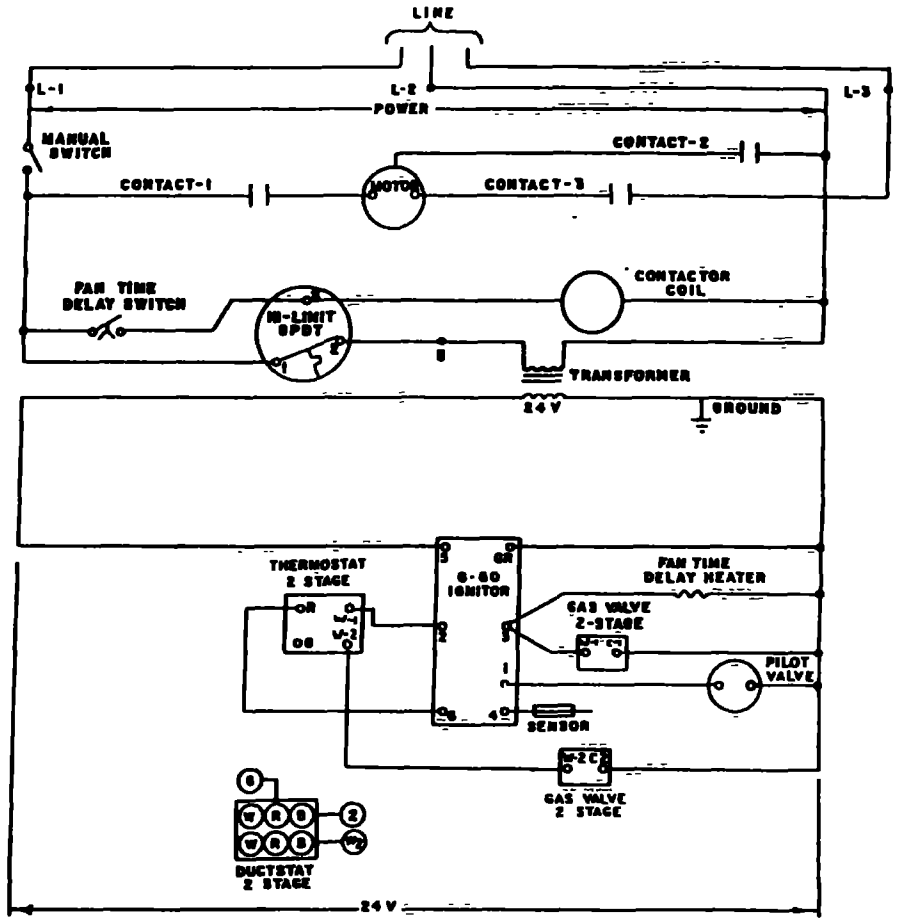

LINE DIAGRAM

WARNING
DISCONNECT ELECTRICAL POWER SOURCE TO PREVENT INJURY OR DEATH FROM ELECTRICAL SHOCK

CAUTION
USE COPPER CONDUCTORS ONLY TO PREVENT EQUIPMENT DAMAGE

GDNC-S/W-26

FIGURE 37 - Indoor Duct Furnace, Intermittent Pilot Ignition, Two Stage Gas Control, Horizontal Blower Assembly, Fan Time Delay, 208-230/60/3, Natural Gas

P. O. 19165-51137

TAG _____

PRINT DATE	3/84	FILE NO	PL-TD-UH-GCNC-SQ-001.00	REPLACES	GCNC-SU-001.00	GCNC-SQ-001.00

TRANE®

SUBMITTAL/SELECTION

CENTRIFUGAL FAN GAS UNIT HEATER

MODEL

☑ GCNC (NATURAL GAS) ☐ GCPC (LP GAS)

☐ 005 ☐ 015 ☐ 025
☑ 007 ☐ 017 ☐ 030
☐ 010 ☐ 020 ☐ 035
☐ 012 ☐ 022 ☐ 040

VOLTAGE
☑ 115/60/1
☐ 230/60/1
☐ 208/60/3
☐ 230/60/3
☐ 460/60/3

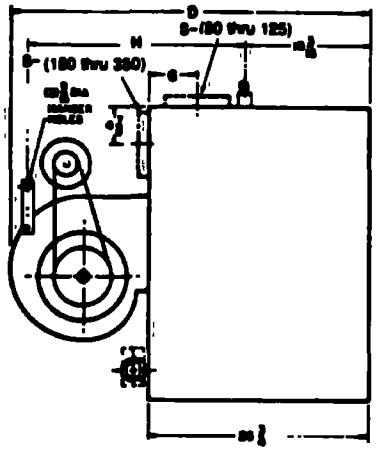

SIDE VIEW

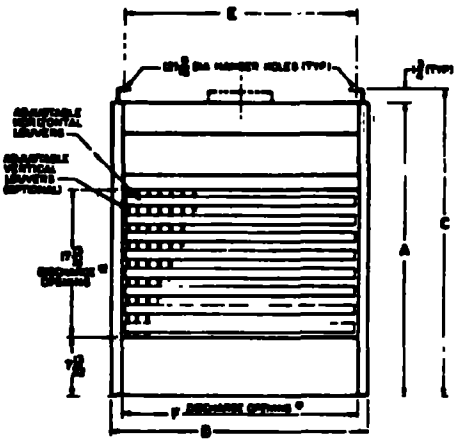

FRONT VIEW

* Discharge Duct Flange Opening is Same Dimension with 1" Flange All Around

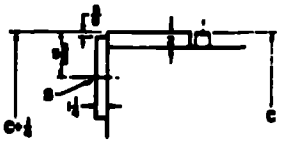

Detail A
400 MBh UNIT VENTING

DIMENSIONAL DATA

GCNC/GCPC MODELS	INPUT MBh	INCHES									GAS INLET		FAN SIZE
		A	B	C	D	E	F	G	H	S*	NAT.	LP	DIA. X WIDTH
005	50	31	17⅛	32¾	42 9/16	14⅛	15⅛	4⅛	24⅛	4" R	½	½	9" x 9"
007	75	31	17⅛	32¾	42 9/16	14⅛	15⅛	4⅛	24⅛	6" R	½	½	9" x 9"
010	100	31	17⅛	32¾	42 9/16	14⅛	15⅛	4⅛	24⅛	6" R	½	½	9" x 9"
012	125	31	20⅛	32¾	44 3/16	17½	18⅛	4⅛	25 13/16	6" R	½	½	10" x 10"
015	150	36	20⅛	37⅛	44 3/16	17½	18⅛	5⅛	17½	7" R	½	½	10" x 10"
017	175	36	23⅛	37⅛	47	20⅛	20⅛	5⅛	19	7" R	½	½	12" x 12"
020	200	36	26⅛	37⅛	47	23	23⅛	5⅛	19	8" R	½	½	12" x 12"
022	225	36	28⅛	37⅛	47	25⅛	25⅛	5⅛	19	8" R	½	½	12" x 12"
025	250	36	31⅛	37⅛	47	28½	29⅛	5⅛	19	8" R	½	½	12" x 12"
030	300	36	37⅛	37⅛	44 3/16	34	34⅛	5⅛	25 1/16	10" ov	½	½	(2) 10" x 10"
035	350	36	42⅛	37⅛	47	38½	40⅛	5⅛	26	10" ov	½	½	(2) 12" x 12"
040	400	36	48⅛	37⅛	47	45	45⅛	5⅛	26	12" ov	½	½	(2) 12" x 12"

*R = Round, ov = Oval. Refer to Detail A above for 400 MBh unit.

©THE TRANE COMPANY 1984

MOUNTING DETAIL

(HANGING HARDWARE SUPPLIED BY OTHERS)

Steel Construction

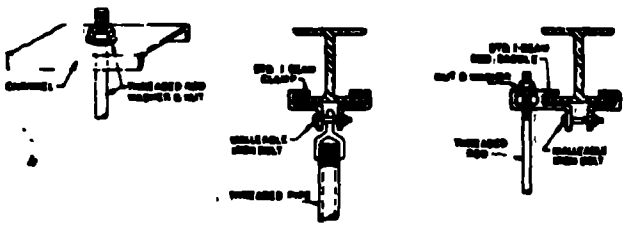

Wood Construction

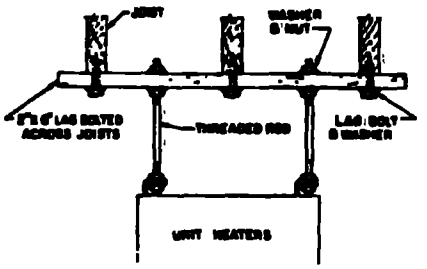

PERFORMANCE DATA

MODELS	INPUT-MBh MAX.	INPUT-MBh MIN	OUTPUT MBh	AVG. OUTLET VELOCITY AT MAX. CFM FPM	CFM RANGE*	MOTOR HP	APPROX WT NET	APPROX WT SHIP
GCNC/GCPC-005	50 0	25.0	38 5	880	730 - 465	1/6	218	230
-007	75.0	37.5	57.8	945	1000 - 496	1/6	222	234
-010	100.0	50 0	77.0	880	1200 - 625	1/4	235	247
-012	125 0	62.5	96 3	950	1575 - 1160	1/3	250	265
-015	150.0	75.0	115 5	1030	1975 - 1385	1/3	292	309
-017	175.0	87.5	134.8	1045	2300 - 1620	1/2	310	328
-020	200 0	100.0	154.0	965	2400 - 1850	1/2	310	338
-022	225 0	112.5	173.3	935	2600 - 2080	1/2	342	365
-025	250 0	125 0	192 5	930	2850 - 2310	3/4	352	400
-030	300.0	150.0	231.0	1080	3950 - 2780	3/4	390	441
-035	350 0	175.0	269.5	1090	4600 - 3240	1	460	529
-040	400.0	200 0	308.0	1000	4800 - 3700	1	490	582

NOTE

Ratings are shown for elevations up to 2000 feet above sea level. Above 2000 ft. input must be derated 4% for each 1000 ft. above sea level

*CFM range is based on 0.2" maximum external static pressure.

MOTOR ELECTRICAL DATA

CURRENT CHARACTERISTICS	FULL LOAD AMPS* 1/6 HP	1/4 HP	1/3 HP	1/2 HP	3/4 HP	1 HP
115/60/1	4.4	5.8	7.2	9.8	13.8	16.0
230/60/1	2.2	2.9	3.6	4.9	6.9	8.0
208/60/3	NR	NR	NR	2.2	3.1	4.1
230/60/3	NR	NR	NR	2.0	2.8	3.5
460/60/3	NR	NR	NR	1.0	1.4	1.8

*FLA based on NEC ratings. All motors are 1725 RPM.

NR = motor available, but not rated by NEC.

APPROXIMATE DISTANCE OF THROW (FT) AT NOMINAL AIRFLOW

DISTANCE FROM FLOOR TO BOTTOM OF UNIT	UNIT SIZE INPUT - MBh 50	75	100	125	150	175	200	225	250	300	350	400
8'	33	40	56	60	65	70	75	80	85	100	106	112
10'	28	35	49	52	57	61	65	69	74	87	90	97
12'	NR	NR	45	47	51	56	59	63	67	79	83	89
15'	NR	NR	NR	NR	45	49	52	56	60	70	74	80
20'	NR	NR	NR	NR	NR	NR	46	50	54	63	66	70

NR = Not recommended

MECHANICAL SPECIFICATIONS
CENTRIFUGAL FAN GAS UNIT HEATERS

GENERAL
Units are completely factory assembled, piped, wired, and test fired. All units are A.G.A. Certified and conform with the latest ANSI Standards for safe and efficient performance. Units are provided with four point suspension hangers, and are available for operation on either natural or LP (propane) gas.

CASING
Casings are die-formed, 20 gauge galvanized steel and finished in baked enamel. The bottom panel is easily removed to provide service access to the burners, pilot, and orifice. The pilot is also accessible through a side panel access plate. All units provided with independently adjustable horizontal louvers with stops to prevent total closure.

HEAT EXCHANGER
Standard heat exchanger construction consists of seam welded 20 gauge aluminized steel tubes and 18 gauge aluminized steel headers.

DRAFT DIVERTER
Standard draft diverter construction is corrosion resistant aluminized steel.

BURNERS
Burners are die-formed, corrosion resistant aluminized steel, with stainless steel port protectors. Port protectors prevent scale or foreign matter from obstructing the burner ports. Burners individually removable for ease of inspection and servicing. Each burner is provided with an individually adjustable, manually rotated air shutter adjustment.

FANS
Centrifugal fan is belt driven with adjustable pitch motor sheave. Motor and fan are dynamically balanced for quiet operation.

MOTORS
Standard motors are 115 volt, 60 hz, single phase, totally enclosed with built-in thermal overload protection. Optional 230/60/1 motors are available on all units. Optional 208, 230, 460/60/3 motors are available on 125 through 400 MBh units.

CONTROLS
A factory installed junction box is provided for all power connections. Standard units are provided with a 24 volt combination single stage automatic gas valve, including main operating valve and pilot safety shutoff, pressure regulator, manual main and pilot shutoff valve, and adjustable pilot valve. Gas valve is suitable to a maximum inlet pressure of 0.5 psi (14" W.C.) on natural gas. A 24 volt control transformer, high limit, and fan time delay relay are provided. The fan time delay relay delays the fan start until the heat exchanger reaches a pre-determined temperature. It also allows the fan to operate after burner shutdown, removing residual heat from the heat exchanger.

FACTORY INSTALLED OPTIONS

CONTROL OPTIONS

☐ Two-Stage Gas Valve

Provides two stages of heat. Ignition is at low fire (50% of the unit's rated input). Requires the use of a two-stage thermostat.

☐ Hydraulic Modulating Gas Valve (Natural Gas Units Only)

Provides modulated heat output. Ignition is at low fire (50% input), and discharge temperature sensing bulb located in the air stream modulates the gas input from 100% to 50% rated input. Provided with an automatic electric valve in series which cycles the unit in response to a low voltage single-stage thermostat.

☑ Intermittent Pilot Ignition

Solid state ignition control system ignites the pilot by spark during each cycle of operation. When pilot flame is proven, main burner valve opens to allow gas flow to burners. Pilot and burners are extinguished during off cycle.

HEAT EXCHANGER OPTIONS

☑ Type 409 Stainless Steel

Heat exchanger tubes and headers are seamed welded 20 gauge type 409 stainless steel.

☐ Type 321 Stainless Steel

Heat exchanger tubes and headers are seamed welded 20 gauge type 321 stainless steel.

ADDITIONAL OPTIONS

☐ Type 409 Stainless Steel Burners

☐ Orifices for elevations over 2000 feet.

☐ Type 409 Stainless Steel Draft Diverter

☐ Summer/Winter Switch

☐ Vertical Louvers

☑ Duct Discharge Flange

Provided in lieu of louvers on units for use with field ductwork.

☐ Totally Enclosed Motor

FIELD INSTALLED ACCESSORIES

- ☐ Natural to LP (Propane) Gas Conversion Kit
- ☐ Flue Vent Fan

  Flue vent fan provides power venting. Provided with all fixtures for field mounting and wiring, the flue vent fan is activated in response to a single stage thermostat. A centrifugal switch in the flue vent fan in turn activates the automatic electric gas valve.

- ☐ High Gas Line Pressure Regulator

  Reduces main gas line pressure from a maximum of 5 psi to a minimum of 7 inches W.C.

Discharge Nozzles

- ☐ "Y" Splitter
- ☑ 45° Downward
- ☐ 90° Downward
- ☐ 5-Way Downward

Thermostats

- ☑ Low voltage room thermostat, single-stage
- ☐ Low voltage room thermostat, single-stage with summer/winter switch
- ☐ Low voltage room thermostat, two-stage
- ☐ Line voltage light duty room thermostat, single-stage
- ☐ Universal tamper-proof guard for all room thermostats
- ☐ Low voltage duct thermostat, single-stage
- ☐ Low voltage duct thermostat, two-stage

Since The Trane Company has a policy of continuous product improvement, it reserves the right to change design and specification without notice