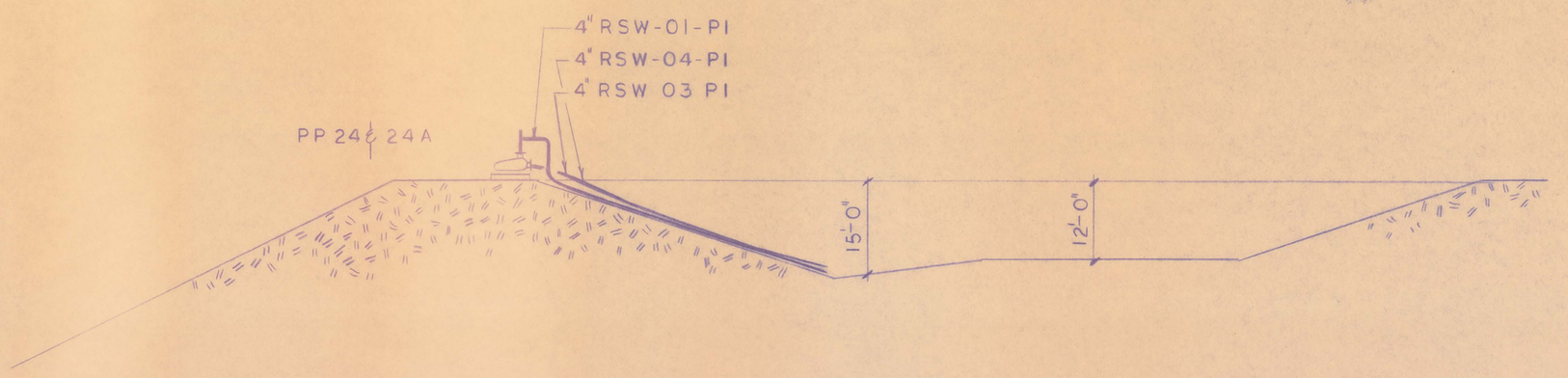

WASH POND
SECTION O-O

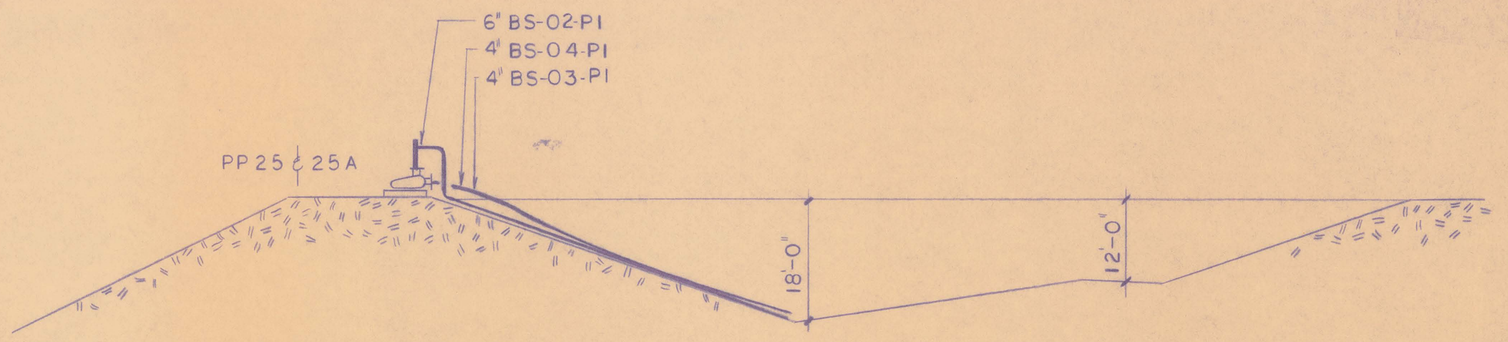

BARREN POND
SECTION N-N

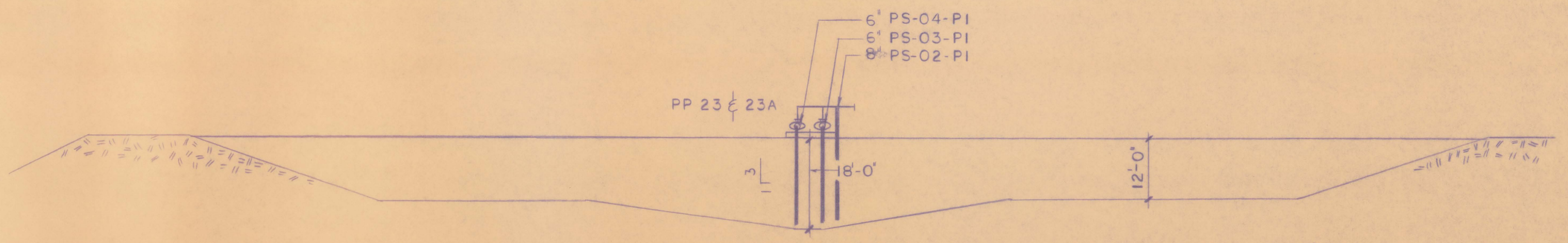

PREG POND
SECTION M-M

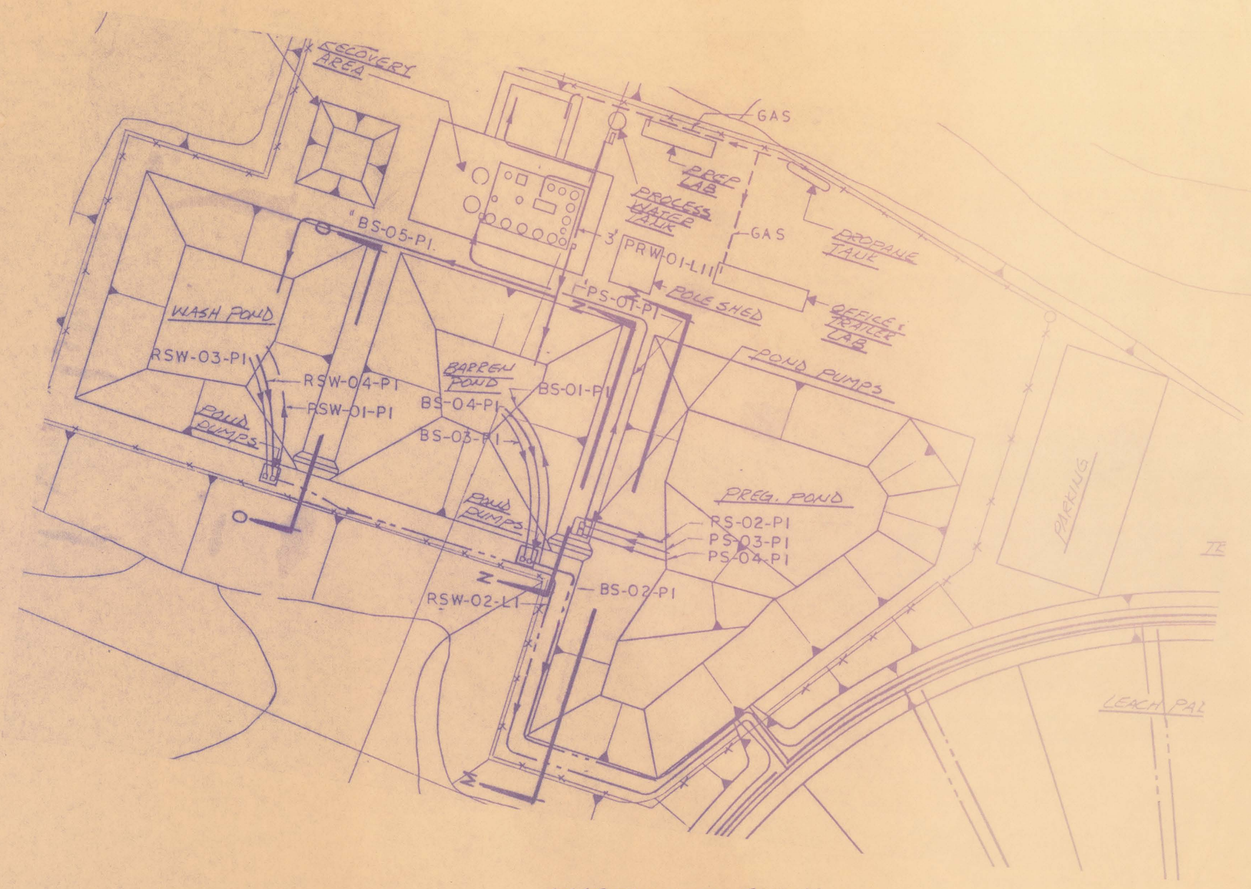

SECTION LOCATIONS

ISSUED FOR CONSTRUCTION
DATE 8/28/90
SIGNED

	BY	DATE
DESIGN	SCOTIA	9/89
DRAWN		9/89
CHKD		9/89
APPVD		
APPVD		
APPVD		
DATE PRINTED		

NO	DATE	BY	CHK	DESCRIPTION
A	9/8			FOR REVIEW
A	7/18			ISSUED FOR CONST.

GWALIA USA LIMITED
BARITE HILL PROJECT
POND PUMP SECTIONS & ELEVATIONS

SCOTIA INC.
Salt Lake City, Utah

SCALE 1/16 = 1'-0"
DRAWING NUMBER 89-0750-703
REV A
ACCT. NO.

REFERENCES: DWG. NO. | TITLE

REVISIONS: NO | DATE | BY | CHK | DESCRIPTION