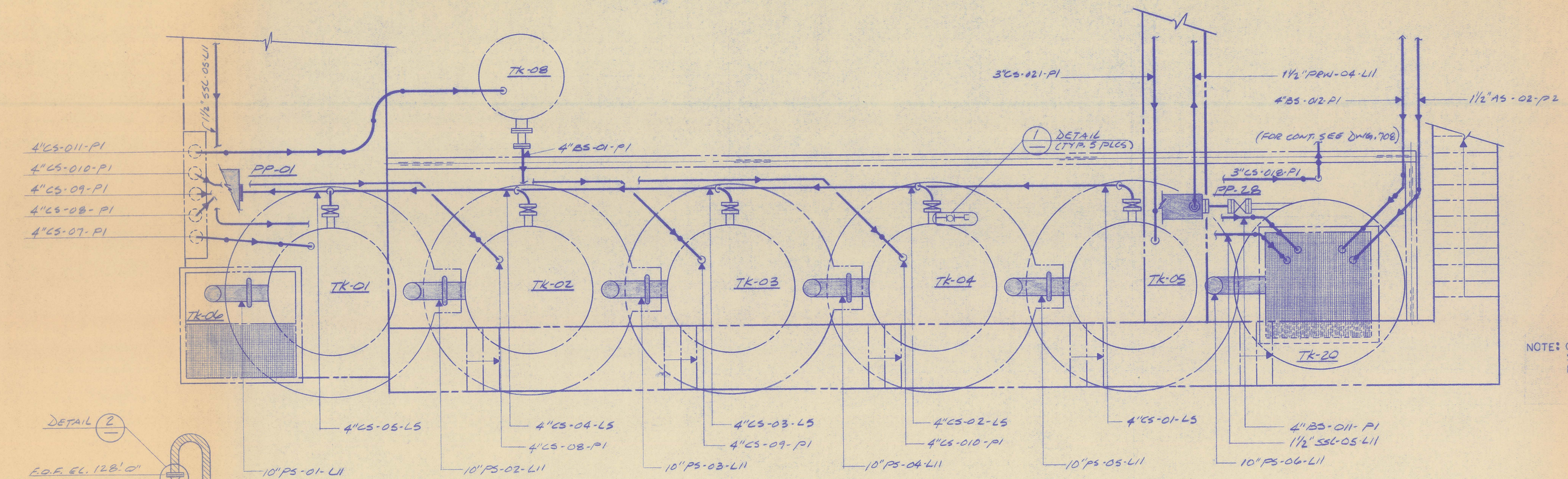

SKID #1 CARBON COLUMN PIPING PLAN

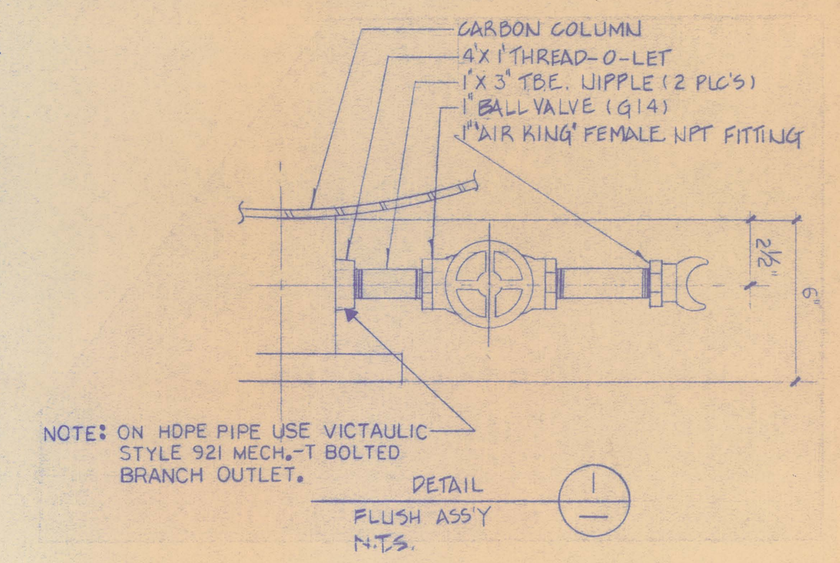

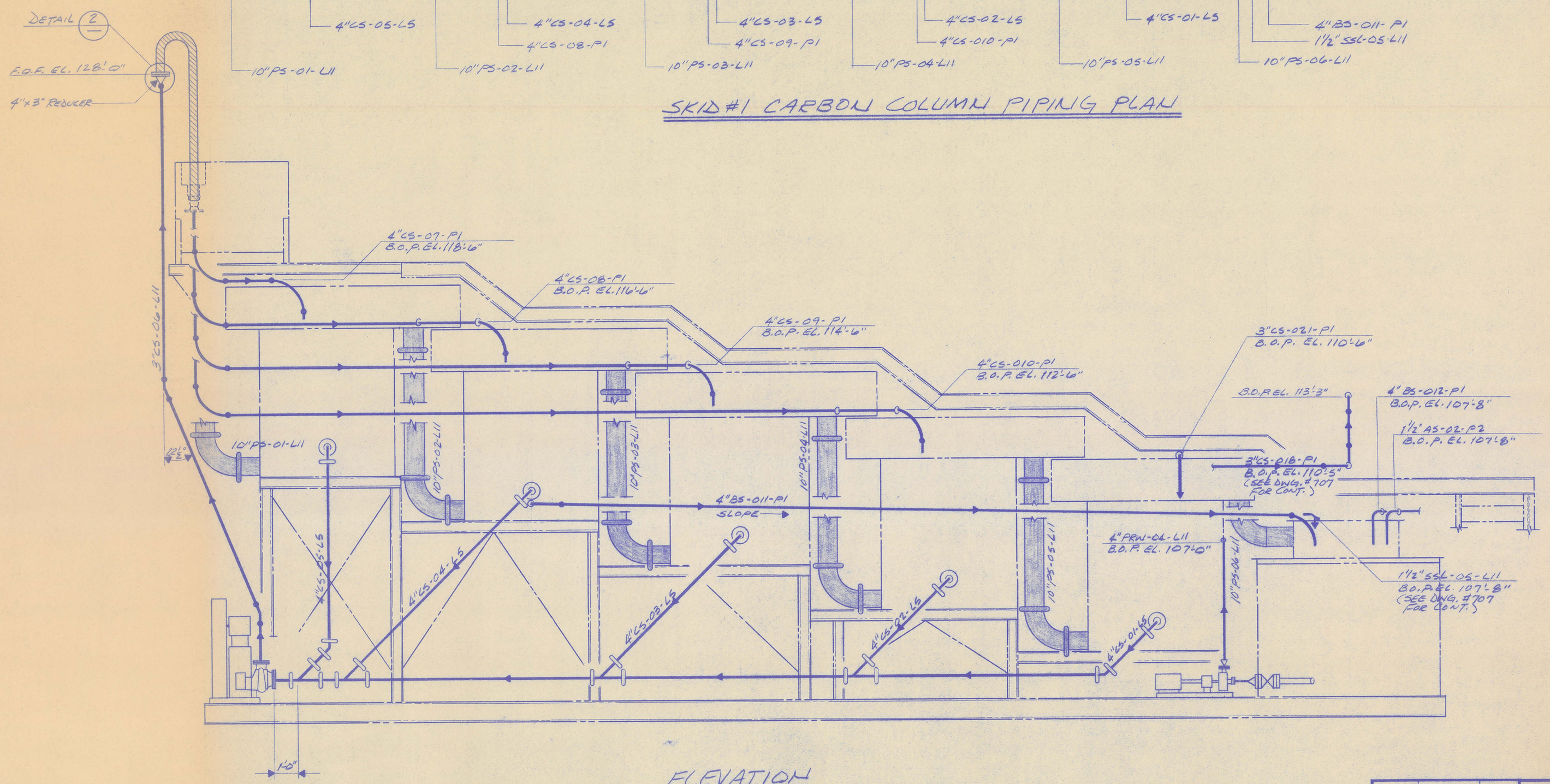

ELEVATION

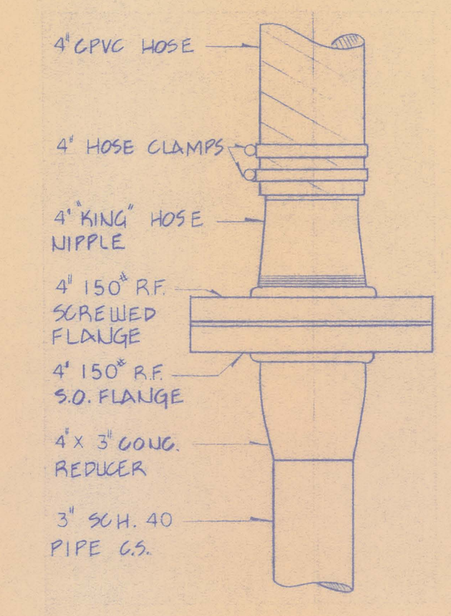

DETAIL 2
N.T.S.

	BY	DATE
DESIGN	SSI	
DRAWN	WELSEN	8-16-89
CHKD		
APPVD		
APPVD		
APPVD		
DATE PRINTED		

SEP 28 1989

GWALIA U.S.A. LIMITED
BARITE HILL PROJECT
SKID #1 CARBON COLUMN
PIPING PLAN, ELEVATION & DET'S

SCOTIA INC.
Salt Lake City, Utah

SCALE 3/8" = 1'-0"
DRAWING NUMBER 89-0635-706
REV A
ACCT. NO.

REVISIONS NO	DATE	BY	CHK	DESCRIPTION
A	8-16-89	MN		APPROVAL DRAWING

REFERENCES: DWG. NO. | TITLE