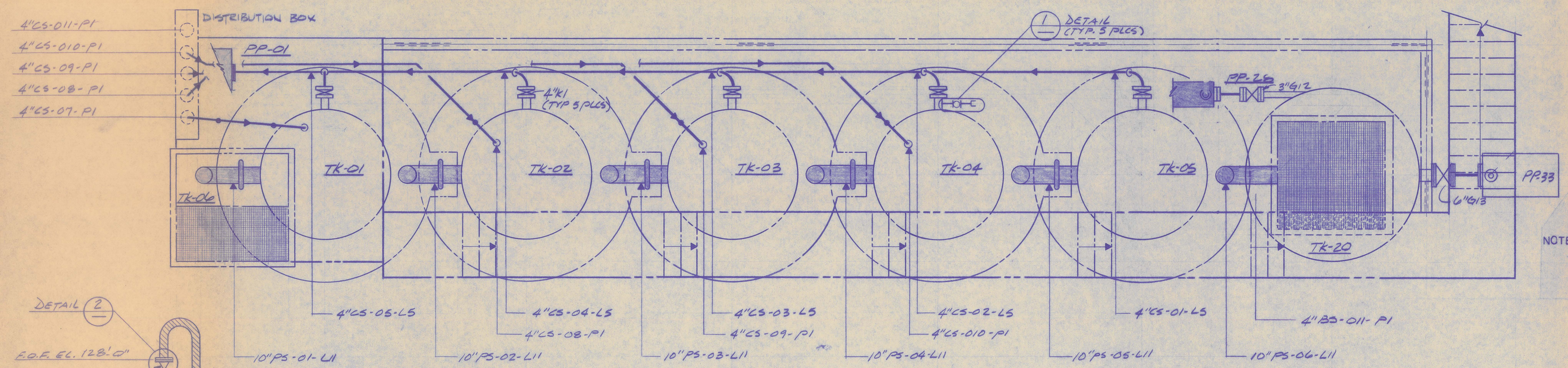

SKID #1 CARBON COLUMN PIPING PLAN

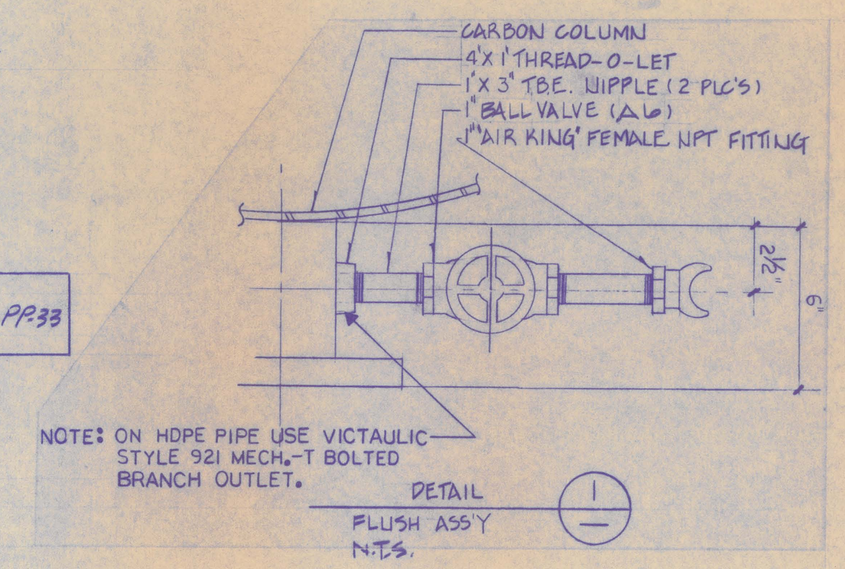

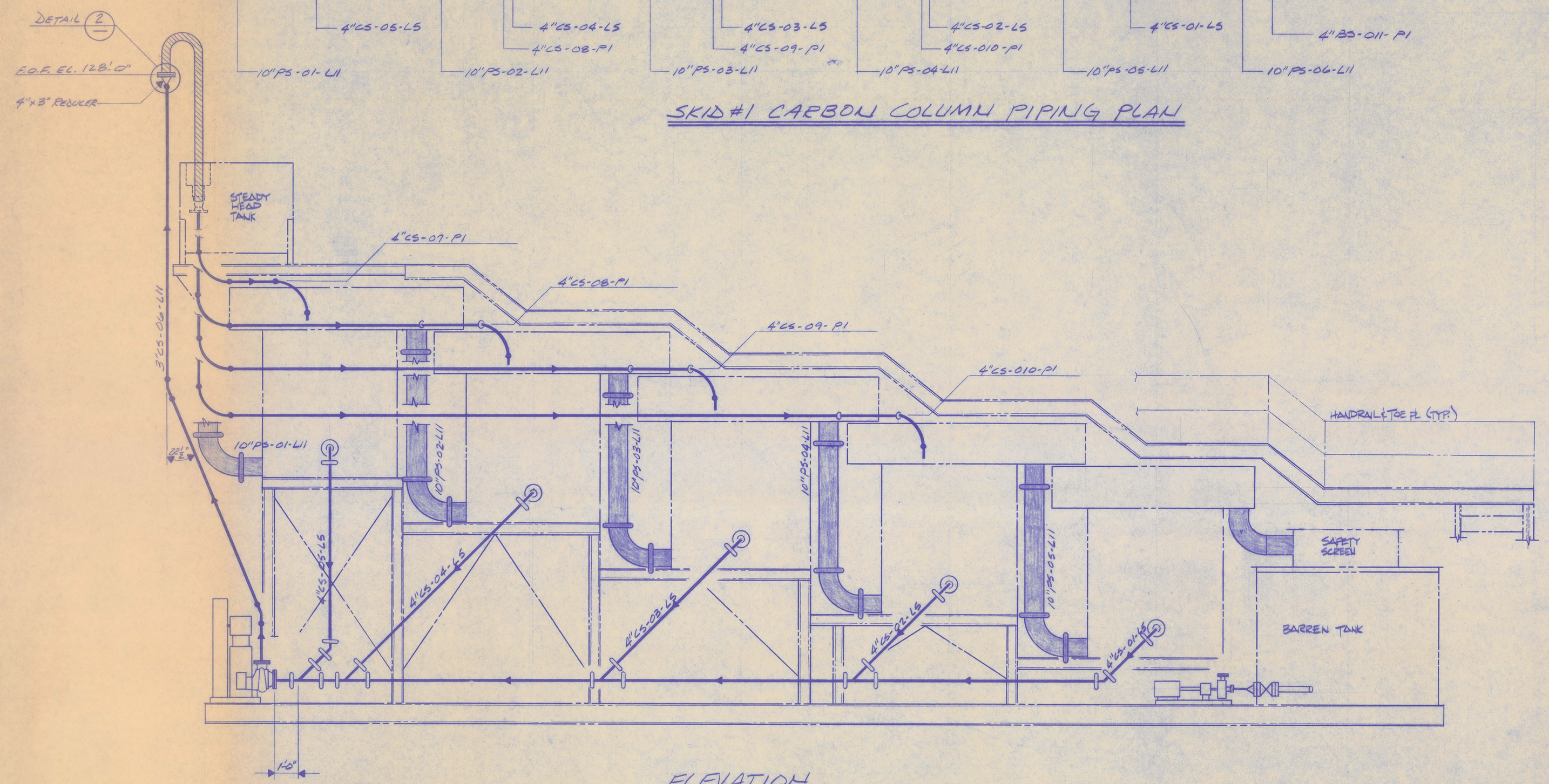

ELEVATION

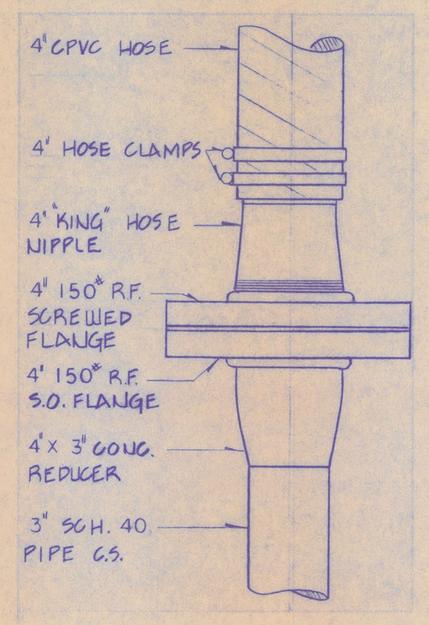

DETAIL 2
N.T.S.

ISSUED FOR CONSTRUCTION
DATE 7/89
SIGNED

OCT 16 1990

	BY	DATE
DESIGN	SSI	9/89
DRAWN	N. ELSEN	"
CHKD		"
APPVD		
APPVD		
APPVD		
DATE PRINTED		

GWALIA USA LIMITED
BARITE HILL PROJECT
SKID #1 CARBON COLUMN
PIPING PLAN, ELEVATION & DET.'S

SCOTIA INC.
Salt Lake City, Utah

SCALE 3/8" = 1'-0"
DRAWING NUMBER 89-0635-706
REV. 0
ACCT. NO.

NO	DATE	BY	CHK	DESCRIPTION
0	7/89			ISSUED FOR CONST.

DWG. NO.	TITLE

REFERENCES

DWG. NO.	TITLE