NOZZLE SCHEDULE

SYM.	SERVICE	SIZE	PRESS	FACE	BORE	MAT'L	COMMENTS
	O'FLOW	6"φ	150#	F.F.	40	C.S.	S.O. FLG.
	DRAIN	3"φ	150#	F.F.	40	C.S.	S.O. FLG.
	SOLUTION OUTLET	3"φ	150#	F.F.	40	C.S.	S.O. FLG.

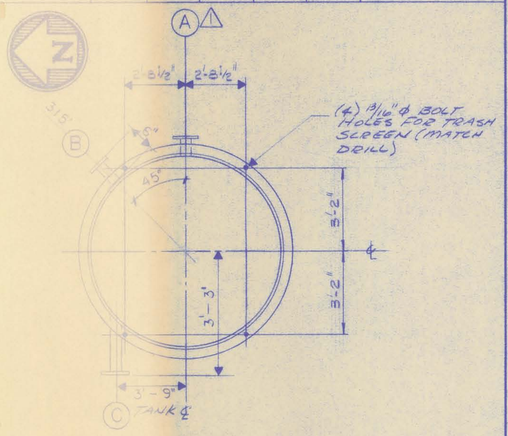

NOZZLE ORIENTATION PLAN
NTS

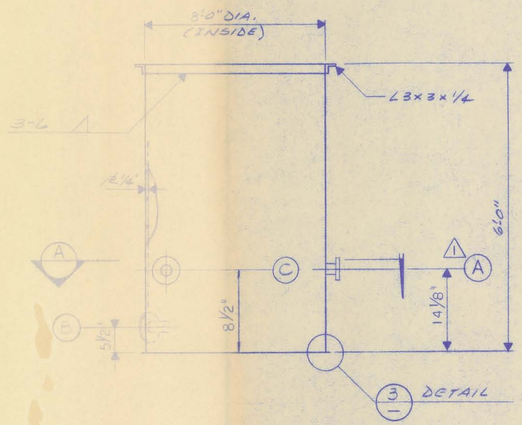

BARREN SOLUTION TANK TK-20
NTS

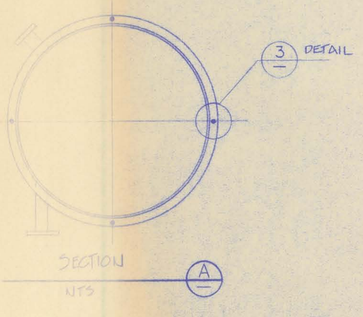

NTS

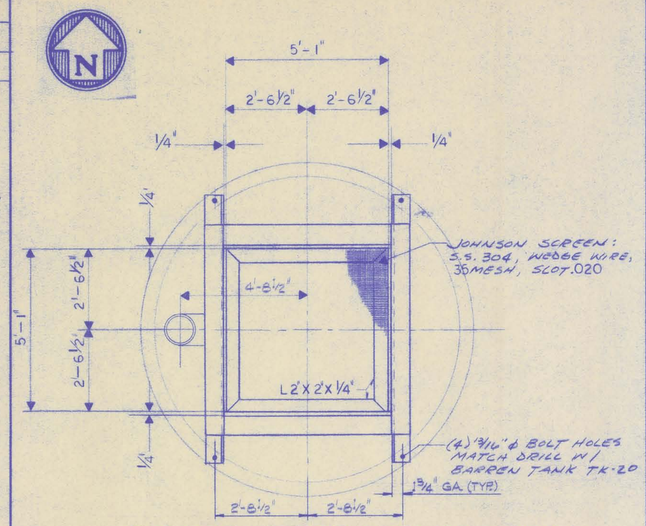

SAFETY SCREEN SC-03 PLAN
NTS

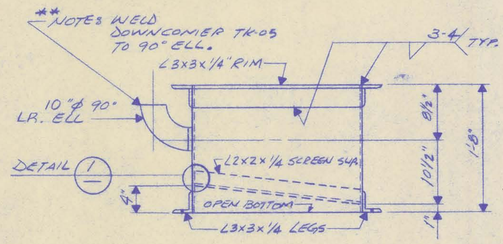

SAFETY SCREEN SC-03 ELEVATION
N.T.S.

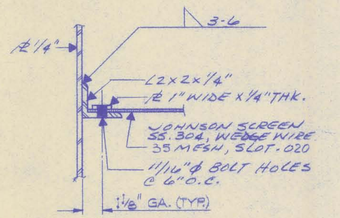

DETAIL

ISSUED FOR CONSTRUCTION
DATE 8-11-89
SIGNED D.S.

NOZZLE SCHEDULE

SYM.	SERVICE	SIZE	PRESS	FACE	BORE	MAT'L	COMMENTS
A	SOL'N OUTLET	2"φ	150#	F.F.	40	C.S.	S.O. FLG.
B	DRAIN	2"φ	150#	F.F.	40	C.S.	S.O. FLG.

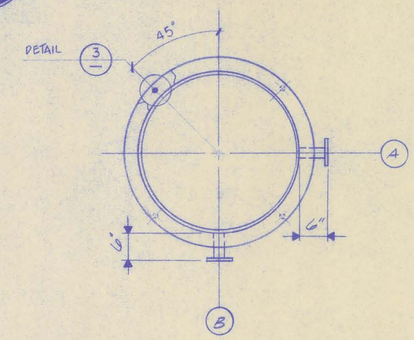

NOZZLE ORIENTATION PLAN
NTS

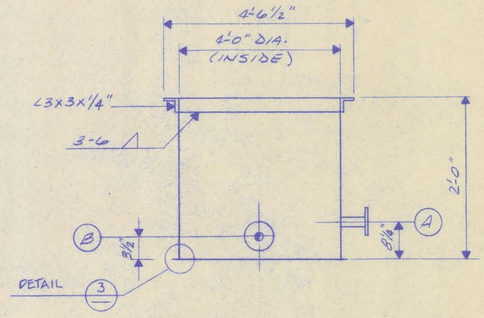

ELECTROWINNING TANK TK-17 (1-REQ'D)
REPLATE TANK TK-18 (1-REQ'D)
NTS

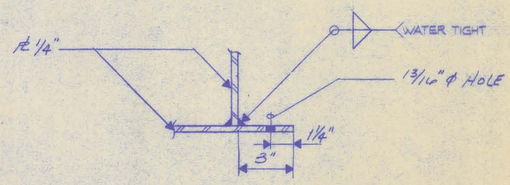

DETAIL (3) (TYP. 4 PLCS. EACH TANK)
SCALE: 3"=1'-0"

NOZZLE SCHEDULE

SYM.	SERVICE	SIZE	PRESS	FACE	BORE	MAT'L	COMMENTS
A	SOL'N INLET	6"φ	150#	F.F.	40	C.S.	S.O. FLG.
B	SOL'N O'FLOW	6"φ	150#	F.F.	40	C.S.	S.O. FLG. BLIND FLG.
C	SOL'N OUTLET	10"φ	150#	F.F.	40	C.S.	

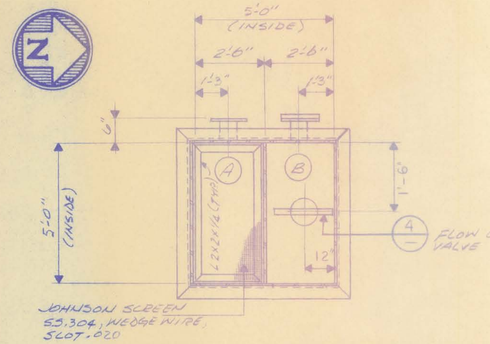

STEADY HEAD TK-06 PLAN W/TRASH SCREEN
NTS

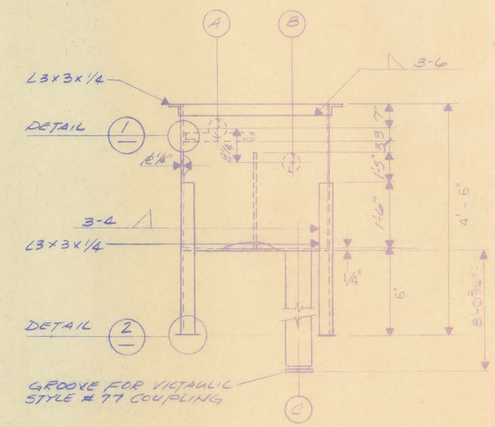

STEADY HEAD TK-06 ELEV. W/TRASH SCREEN
NTS

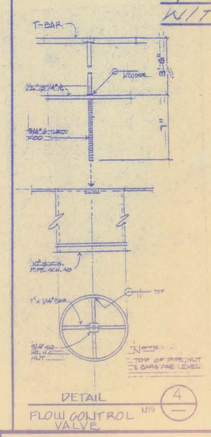

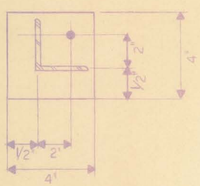

DETAIL
SCALE: NTS

	BY	DATE
DESIGN	SSI	
DRAWN	NIELSEN	7/89
CHKD	RJF	7/20/89
APPVD	[illegible]	8/4/89
APPVD		
APPVD		
DATE PRINTED		

SEP 1 1989

SSI SCOTIA INC.

GWALIA U.S.A. LIMITED
BARITE HILL PROJECT
BARREN TANK TK-20 TRASH SCREEN
SC-03 SAFETY SCREEN
REPLATE TANK TK-18 & TK-17

SCALE AS NOTED
DRAWING NUMBER

NO	DATE	BY	CHK	DESCRIPTION
A	7/1	MN		APPROVAL DRAWING
A	7/28			ADD NOZZLE/BARREN TANK
A	8/4			ISSUED FOR CONST.
A	8/21			CHANGE NOZZLE A TK-20

REFERENCES: DWG. NO. | TITLE

REVISIONS: NO | DATE | BY | CHK | DESCRIPTION