Equipment Manuals

Sangamo/Breazeale NPL Site
Pickens County, South Carolina

Equipment Manuals

Sangamo/Breazeale NPL Site
Pickens County, South Carolina

TABLE OF CONTENTS

Section

1	Durco Centrifugal Pumps
2	North East Environmental Products Air Stripper
3	Rosemount Pressure Transmitters Ashcroft Pressure Gauges
4	Badger Nutating Disc Meters
5	Magnetrol Level Transmitters
6	Drexelbrook Open Channel Flowmeter
7	Rosedale Bag Filters
8	ISCO Sampler
9	Recirculation Tank Fabrication Drawing
10	Building Heater and Exhaust Fan

SECTION 1

THE DURIRON COMPANY, INC.
DAYTON, OHIO
DURCO PUMP PERFORMANCE
CHARACTERISTICS

EYE AREA : 3.5 SQ. IN.
MAX SPHERE: 13/32 IN.
IMPELLER : REVERSE VANE

MARK III RV
2K2X1-10A/8.5000
SPEED: 3500
CURVE NO. 438835

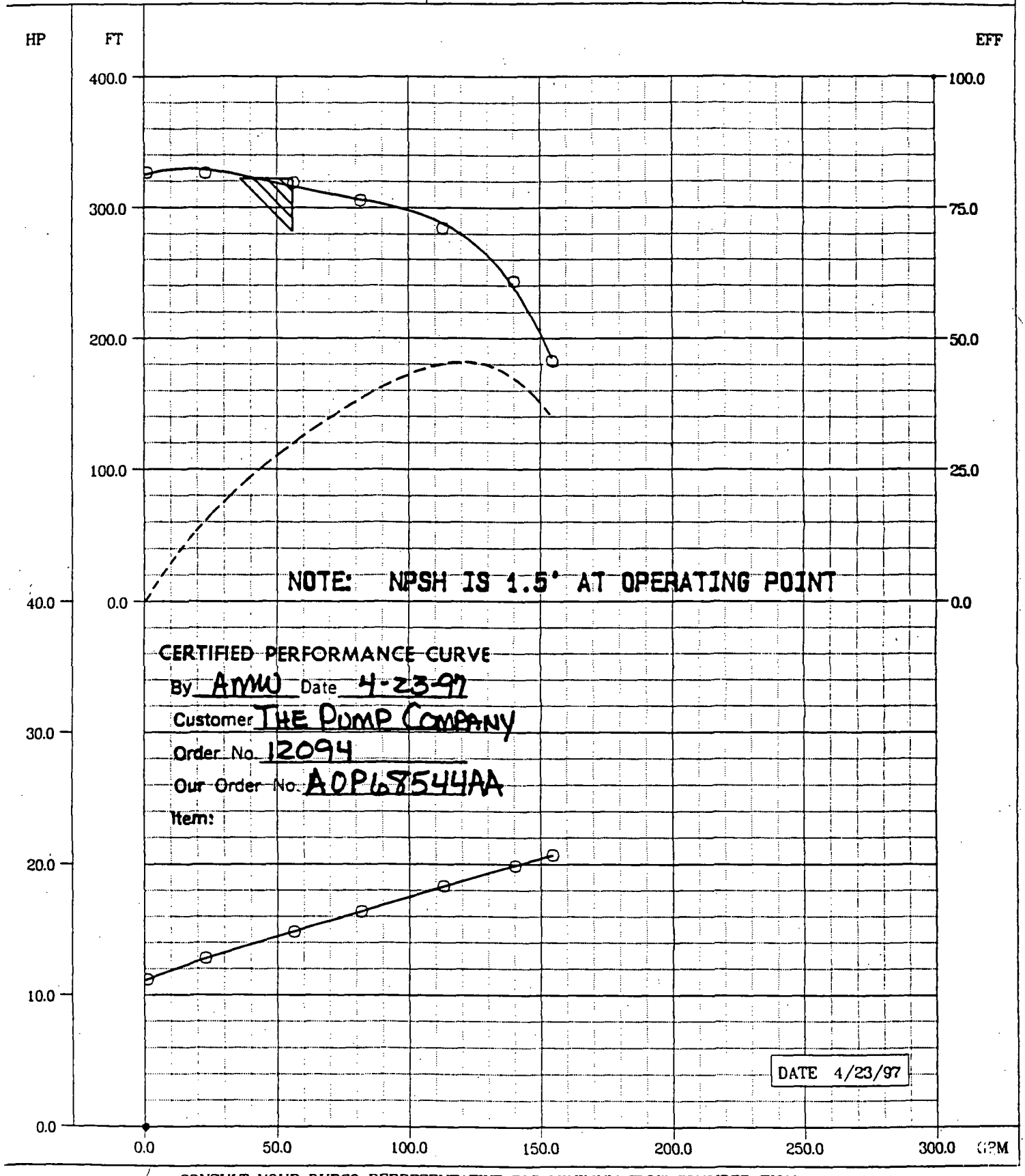

CONSULT YOUR DURCO REPRESENTATIVE FOR MINIMUM FLOW CONSIDERATION

DURCO

THE DURIRON COMPANY, INC.
Rotating Equipment Group, Dayton Ohio

Date: March 5, 1997

The Pump Company
Attn. Document Control
4725 Stockholm Court
Charlotte, NC 28210

Customer PO #: **12094**
Durco Order #: **AOP68544**

DURIRON CERTIFIED DOCUMENTATION TRANSMITTAL

STATUS: **FINAL DOCUMENTS** - This order is released and this documentation is a complete and final set, unless otherwise noted.

DOCUMENT TITLE	COPIES/REPROS
Durco Data Sheet	1
Hydrostatic Certification	1
Typical Pump Curve	1
Pump Dimensional Drawing	1
Drip Rim Drawing	1
Mechanical Seal Drawing	1
Motor Dimensional Drawing	1
Mark III IOM	3

All drawings being returned to Duriron must be sent to the regional sales office.
Associated regional sales office:

THE DURIRON COMPANY, INC.
1025 Old Roswell Road, Suite 203
Roswell, GA 30076
Attn: C. P. Bellnier

PUMP MODEL	
MARK III <REV. VANE>	2K2X1-10ARV
SIZE	GROUP II
NSI NO.	A05
/EIGHT	210
2I	
ASING	
ALLOY DCI	
STANDARD	
150FF FLANGE	
REAR COVER/STUFFING BOX	
ALLOY DCI	
SEALSENTRY - FMS	
COVER GASKET	TM
IMPELLER	
IMPELLER GASKET	TFR
TRIM 8.5	MAX: 10.000
REVERSE VANE	DCI
SHAFT	
BUTTWELD SHAFT	ZH<1018/316>
BEARING HOUSING	
MARK IIIA-CI	CAST IRON
OIL BRGS.	OPEN
DURA "BGM" PROTECTORS	W/TRICO OILER
SEAL	
GROUP II	
CRANE	BELLOWS
SINGLE, INT, O-RING	MOUNTED BY DURCO
TYPE 1	CBS OR FMS
X/XF50 1 O10 1	316 SS
ROTARY	CARBON
SEAT	CERAMIC
SEAT MOUNTING	VITON O-RING
SHAFT PACKING	VITON BELLOWS
ETAL PARTS	316 SS
ET SCREWS/SPRINGS	316 SS
OLLOWER FLANGE	BY DURCO
20	W/FLUSH TAP
TOR	
HORIZONTAL-RELIANCE	FURN. & MTD. BY DURCO
TEFC-XT, SEVERE DUTY	1.15 SF, CLASS F INS.
3600 RPM	
25 HP	284TS, 3/60/460
BASE	
TYPE A - STANDARD	FOUNDATION MTD
SIZE #258	WGT 234#
STEEL	
STD MTG HARDWARE	SS SHIMS <MOTOR ONLY>
DRIP RIM	PUMP END ONLY
DRILL AND TAP ALL HOLES	
COUPLING	
GROUP II GUARD.....STEEL	
<SPECIAL PRICING AUTHORIZATION: BOOK >	
MISCELLANEOUS	
IMPELLER TRIM CHARGE	
GLAND DEDUCT	
LEVEL B PERFORMANCE TEST	
NPSH TEST	

CUSTOMER:
THE PUMP COMPANY
4725 STOCKHOLM COURT
CHARLOTTE, NC 28210
USA

DESTINATION:
CHARLOTTE

TAG NUMBER

QUANTITY 1

INQUIRY NO	12904
JOB/PROJ NO	
REQUEST DATE	04/25/97
TERRITORY	WILMINGTON, NC
SALES REP	TOM WICKHAM
PREPARER	C. P. BELLNIER
SERVICE REP	KATHEE J. CALDWELL

OPERATING CONDITIONS

CAPACITY	56	GPM	12.7	CU M/HR
TDH REQUIRED	310	FT	94.5	M
TDH OFFERED	322	FT	98.2	M
H.P.	14.1	HP	10.5	KW
H.P. MAX	20.9	HP	15.6	KW
NPSH AVAILABLE				
NPSH REQUIRED	2.7	FT	.8	M
SUCT PRESSURE				
CURVE NO				
FLUID PUMPED	WATER			
TEMPERATURE	70 F		21 C	
CONCENTRATION				
SOLIDS PERCENT				
SOLIDS DESC				
VISCOSITY	1.0	CP	1.0	CP
SPEC GRAVITY	1.00		1.00	

DOCUMENTATION REQUIRED	QTE C/R	APP C/R	REV C/R	FIN C/R
DATA SHEETS				1
PUMP DIMENSIONAL DRAWING				1
PUMP CURVE				1
SEAL DRAWING				1
DRIVER DRAWING				1
IOM				3
PERFORMANCE TEST DATA				1
NPSH TEST DATA				1
10 MIN HYDRO TEST CERTIFICA				1

DURCO ORDER AOP68544

CUSTOMER PO 12094

SERIAL NUMBER 438835

PROMISE DATE _____

DURCO

The Pump Company INCORPORATED

4725 Stockholm Ct.
Charlotte, NC 28217
Fax: 704/554-8230
Tel: 704/552-1414

When performance counts...

HERITAGE ENVIRONMENTAL
DURCO MARK III GROUP 2K 2X1-10A/84 RV DCI
PO# 66-01-2814

MARK III
Group II

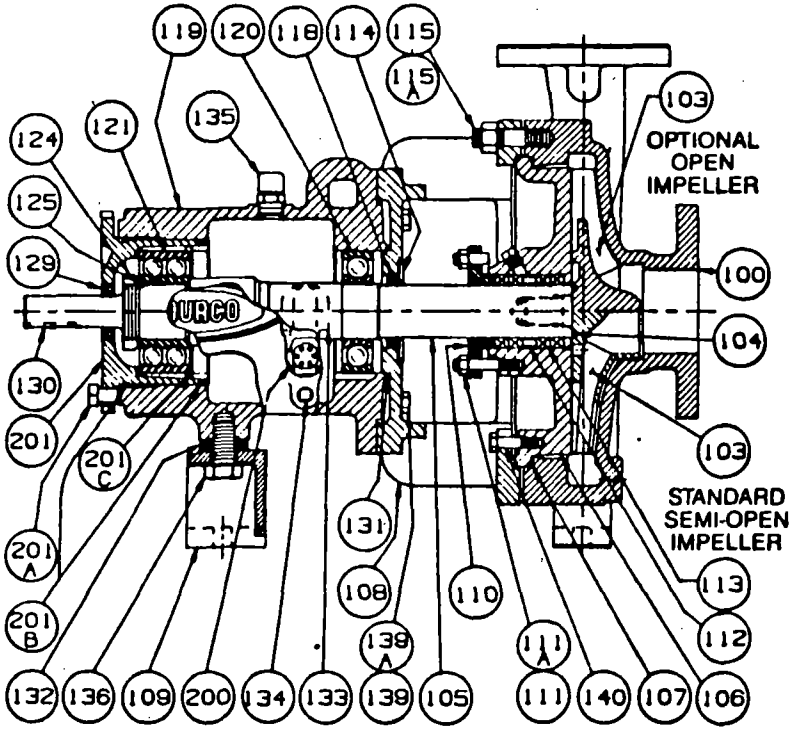

DURCO

CUSTOMER PART NO.		ITEM	GROUP 2K DESCRIPTION (QTY.)	CATALOG NUMBER
	>	100	CASING	AH100-DCI
	>	103	IMPELLER	AH103RV-DCI-84
	*	104	IMPELLER GASKET	2Z104-TFR
	*	105	SHAFT	2Y105-ZH
	>	106	REAR COVER (FMS)	AH106D-DCI
	*	107	REAR COVER GASKET	AH107-TM
	>	108	BEARING HOUSING ADAPTER	YH108-CI
	>	109	BEARING HOUSING FOOT	YF109-CI
		110	GLAND	2Z190H-D20
		111	GLAND FASTENERS (4)	AB111-304
	*	114	INBOARD DEFLECTOR	2Z114-TFEC
		115	CASING STUD W/NUT (8)	AJ115-304
	*	118	INBOARD OIL SEAL (MAGNETIC)	JGZA1875NM3
		119	BEARING HOUSING	2K119-CI
	*	120	INBOARD BEARING	2Z120-SR
	*	121	OUTBOARD BEARING	2K121-SR
	*	124	LOCKNUT	2Z124-SR
	*	125	LOCKWASHER	2Z125-SR
	*	129	OUTBOARD OIL SEAL (MAGNETIC)	JGZA1125N33
		130	COUPLING KEY	2Z130-Z
	*	131	BRG.HSG.ADAPTER GASKET	2Z131-SBR
		132	SPHERICAL WASHER	2Z132-SR
	*	134	DRAIN PLUG	1K134-SR
		136	CAPSCREW-FOOT	2Z136-SR
		139	CAPSCREW-BRG.HSG.ADAPTER(4)	2Z139-SR
		140	CAPSCREW-REAR COVER (2)	AJ140-SR
	*	200	SIGHT GAGE	1K200-SRCD
	*	201	BEARING CARRIER	2K201-DCI
	*	201A	CARRIER SET SCREW	2K201A-SR
	*	201B	CARRIER O-RING (2)	2K201B-NBR
	*	201C	SNAP RING	2K201C-SR
	*		MECH SEAL JOHN CRANE TYPE 1 X/X F50 1 O10 1	

02/28/97

* RECOMMENDED SPARES FOR NORMAL MAINTENANCE
> ADDITIONAL SPARES FOR CRITICAL PUMPS

MARK III - 2K UNVENTED BEARING HOUSING KIT w/OILER

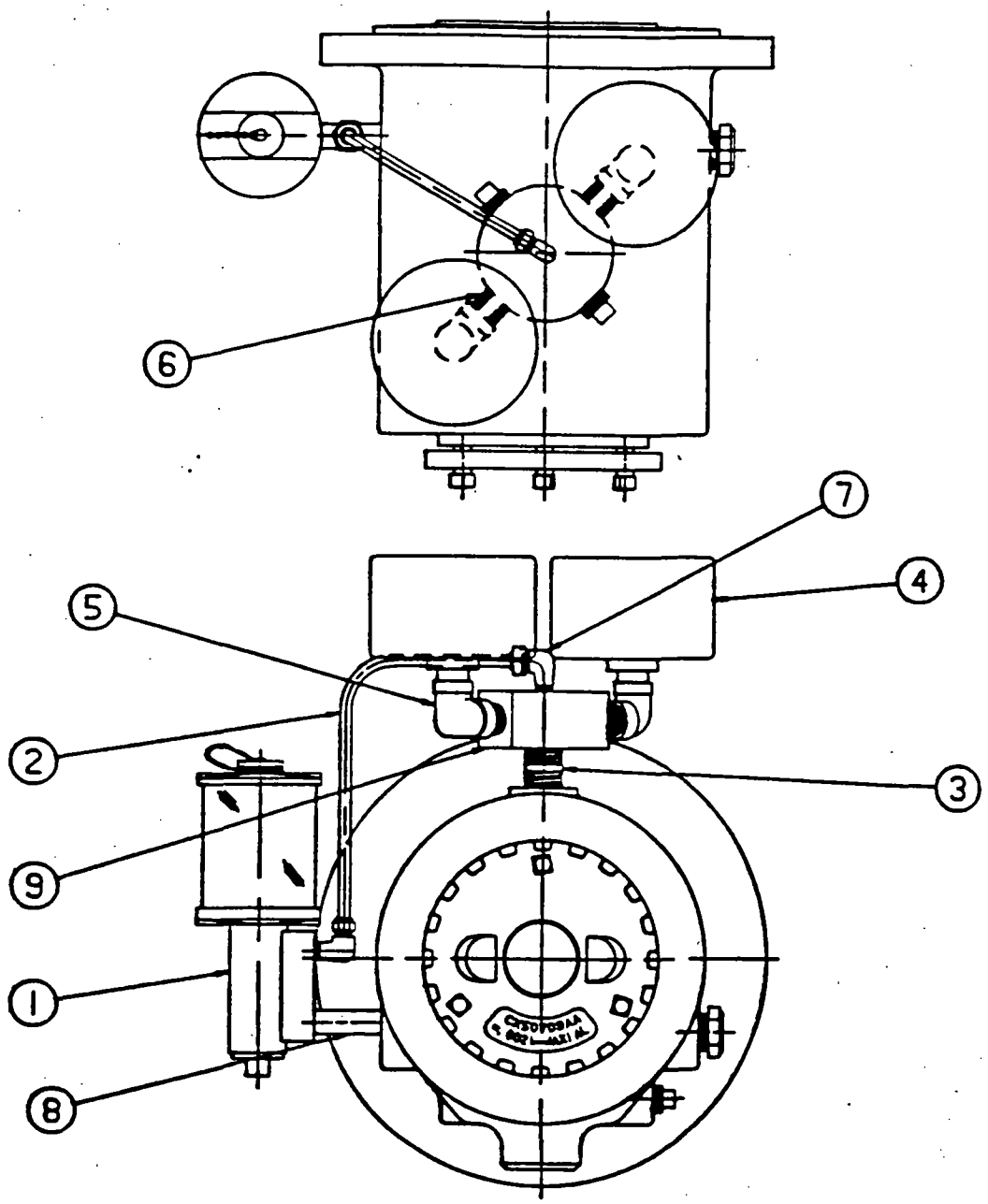

ITEM	REQ'D	MAT'L	PART NO.	DESCRIPTION
1	1		AY53954A	OILER, 5 oz. OIL-RITE STYLE C
2	1		AY45278A134	1/4 O.D.x.035 WALL x13 1/2 TUBING
3	1		Y24888C14	1/2 NPT CLOSE NIPPLE
4	2		AY53955A	EXPAN. CHMBR, 16 IN³, DURA
5	2		Y24889U	3/8 NPT 90° ELBOW
6	2		Y24888G1	3/8 NPT CLOSE NIPPLE
7	2		AY45234J	1/8 NPT MALE TUBE ELBOW, PARKER
8	1		Y24888B2	1/4 NPTx2 NIPPLE
9	1		AY53948A	MANIFOLD- EXPANSION CHAMBER MOUNTING

The Duririon Company, Inc.

PUMP HYDROSTATIC CERTIFICATION

DATE: 03/05/97

PUMP COMPANY THE
P O BOX 240805
CHARLOTTE, NC 28224

Reference:

Your Order No:	**12094**
Our Order No:	**AOP68544**
Components:	**CASING/COVER**
Item No:	

Gentlemen:

This will certify the pressure containing pump wet end parts for the subject order(s) were successfully hydrostatically tested at a minimum pressure of 1.5 times the 100° F pump rating. Parts are passed only if no visual leakage is detected within a minimum period of 10 minutes as required by ANSI B73.1.

Very truly yours,

THE DURIRON COMPANY, INC.

Quality Control

The Duriron Company, Inc.
Rotating Equipment Group
PumpSel 5.7.08

MAR/ 5/1997

PROJECT	:
TAG	:
CUSTOMER	: THE PUMP COMPANY
SERVICE	: WATER
ADDRESS	: CHARLOTTE, NC

— Pump / Process Conditions —

Pump Line	: MARK III (REV. VANE)	
Size	: 2K2X1-10A	
Specific Gravity	: 1.00	
Viscosity	: 1.0	CP
NPSH Available	: 3	FT

— Operating Conditions —

	Initial		Adjusted
Speed	: 3500	RPM	3500
Imp trim	: 8 1/2	IN.	8 1/2
Flow	: 56	GPM	56
Head	: 322	FT	322
Power	: 14.1	HP	14.1
Efficiency	: 32	%	32
NPSH Required	: 2.6	FT	2.6

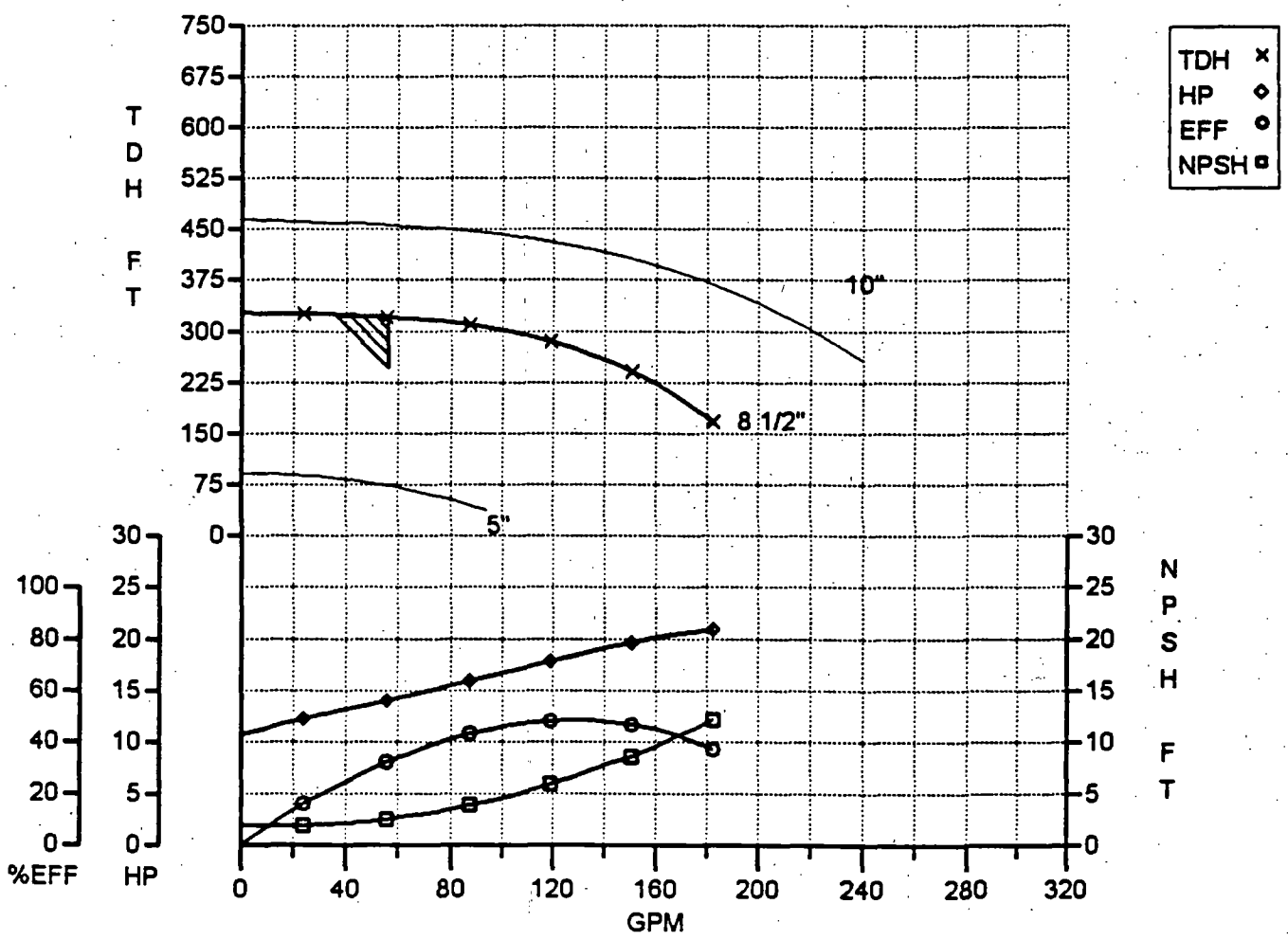

Note: Due to manufacturing variations, for guaranteed NPSHR values, a tolerance of 0.5 Ft. should be added to PumpSel values. See the Online PumpSel User's Guide for more details.

THE PUMP COMPANY
PO# 12094
DURCO# AOP68544
CERTIFIED BY STEPHEN BRITTON

				WEIGHT
DURCO	TYPE	MARK III		210 (95)
	SIZE	2K2X1-10A		
	ALLOY	DCI		
	FLANGE	150FF		
BASEPLATE	TYPE	TYPE A		234 (106)
	SIZE	258		
DRIVER	MFG.	RELIANCE	FRAME 284TS	475 (215)
	HP/RPM	25/3600	TEFC-XT	
	PH/HZ/VOLTS	3/60/460		
SEAL	MFG.	CRANE		
	TYPE	1		
	CODE	X/XF50 1 D10 1		
COUPLING	MFG.	OTHER	TYPE GRP II	
	SIZE	GRP II		

TOTAL WEIGHT 919 (417)

MAX FORCES & MOMENTS
COMBINED AT CENTER OF PUMP

FX	FY	FZ	MX	MY	MZ
145 (645)	365 (1624)	285 (1268)	730 (990)	365 (495)	365 (495)

FLANGE LOADING

FR+MR/3 (FR+1.09MR)	
SUCTION	DISCHARGE
435(1935)	220(978)

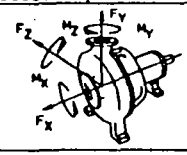

CUSTOMER	THE PUMP COMPANY	
	P.O. NO.	12094
	TAG NO.	
	SERVICE	WATER
DURIRON	ORDER NO.	AOP68544
	SERIAL NO.	438835
	QUOTE NO.	AT970099000
	LINE ITEM	001-00-00

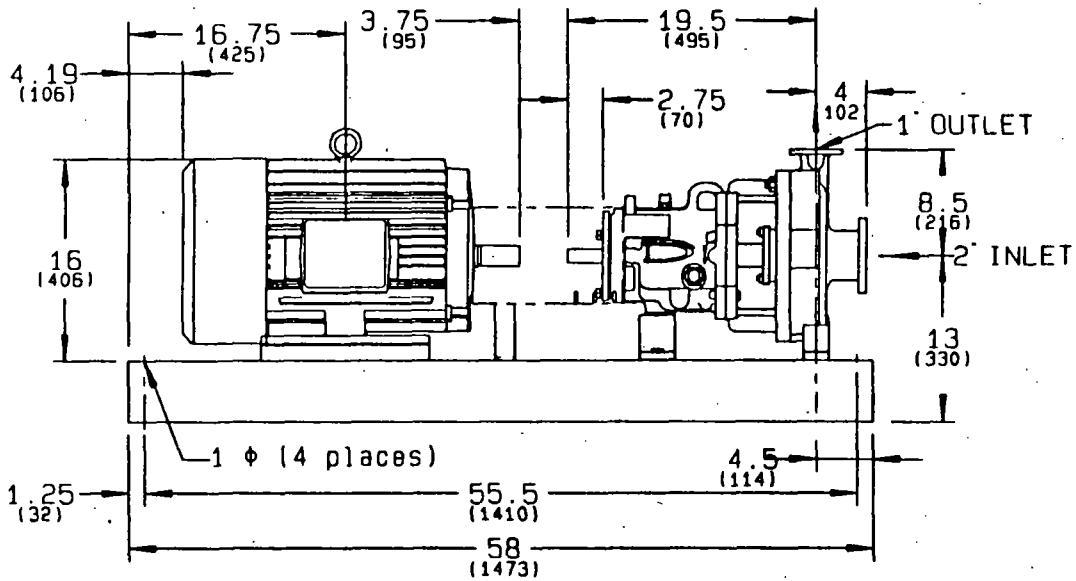

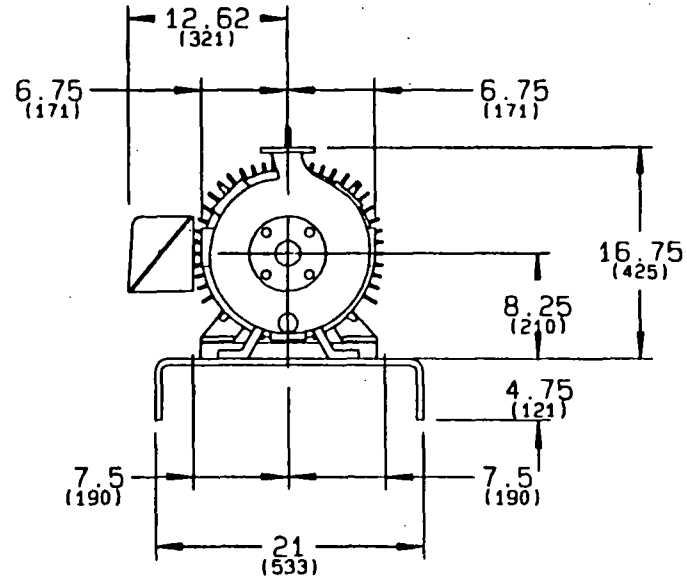

INSTALLATION DIMENSIONS ARE ±.13 (3) UNLESS OTHERWISE NOTED. DIMENSIONS ARE IN INCHES (MILLIMETERS). FORCES ARE IN POUNDS (NEWTONS). MOMENTS ARE IN FOOT-POUNDS (NEWTON-METERS). WEIGHTS ARE IN POUNDS (KILOGRAMS)

TAP CONNECTIONS

TAP	REQ'D SIZE	DESCRIPTION *

PUMP INPUT SHAFT: 1.125 ϕ PUMP KEYWAY: .250 X .125
FLANGE DRILLING PER ANSI B16.5 CLASS 150.
Refer to Supplemental Base Drawing for DRIP RIM Details

FINAL DWG BY: DATE: Mar 05 97 ISSUE: /

DURCO

ANSI BASE WITH DRIP RIM

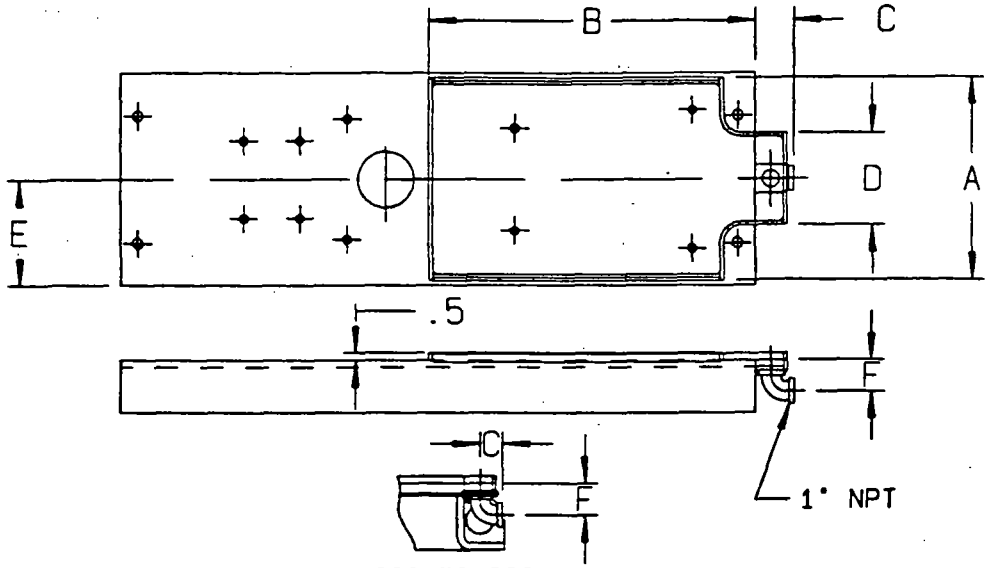

368 TO 398
BASE WITH DRIP RIM

BASE NO	A	B	C	D	E	F
139	14-1/4 (362)	16-3/4 (425)	2-5/8 (67)	6-1/2 (165)	7-1/2 (191)	2-1/4 (57)
148	17-1/4 (438)	16-3/4 (425)	2-5/8 (67)	9-1/2 (241)	9 (229)	2-1/4 (57)
153	20-1/4 (514)	16-3/4 (425)	2-5/8 (67)	12-1/2 (318)	10-1/2 (267)	2-1/4 (57)
245	14-1/4 (362)	22-7/8 (581)	2-5/8 (67)	6-1/2 (165)	7-1/2 (191)	2-1/4 (57)
252	17-1/4 (438)	22-7/8 (581)	2-5/8 (67)	9-1/2 (241)	9 (229)	2-1/4 (57)
258	20-1/4 (514)	22-7/8 (581)	2-5/8 (67)	12-1/2 (318)	10-1/2 (267)	2-1/4 (57)
264	21-1/4 (540)	22-7/8 (581)	2-5/8 (67)	12-1/2 (318)	11 (279)	2-1/4 (57)
268	25-1/4 (641)	22-7/8 (581)	2-5/8 (67)	16-1/2 (419)	13 (330)	2-1/4 (57)
280	25-1/4 (641)	22-7/8 (581)	2-5/8 (67)	16-1/2 (419)	13 (330)	2-1/4 (57)
368	26 (660)	44-3/4 (1137)	2-5/8 (67)	13-1/2 (343)	13 (330)	2-1/4 (57)
380	26 (660)	45 (1143)	2-5/8 (67)	13-1/2 (343)	13 (330)	2-1/4 (57)
398	26 (660)	47-1/2 (1207)	2-5/8 (67)	13-1/2 (343)	13 (330)	2-1/4 (57)

DIMENSIONS IN PARENTHESIS ( ) ARE IN MILLIMETERS.

DURIRON	ORDER NO.	A0P68544	CUSTOMER	THE PUMP COMPANY		
	SERIAL NO.	438835		P.O. NO.	12094	
	QUOTE NO.	AT970099000		TAG NO.		
	LINE ITEM	001-00-00		FINAL DWG BY:	DATE: Mar 05 97	ISSUE. 1

SP1156

DR.	G No.	ISSUE	REVISIONS
H-SP-4257			

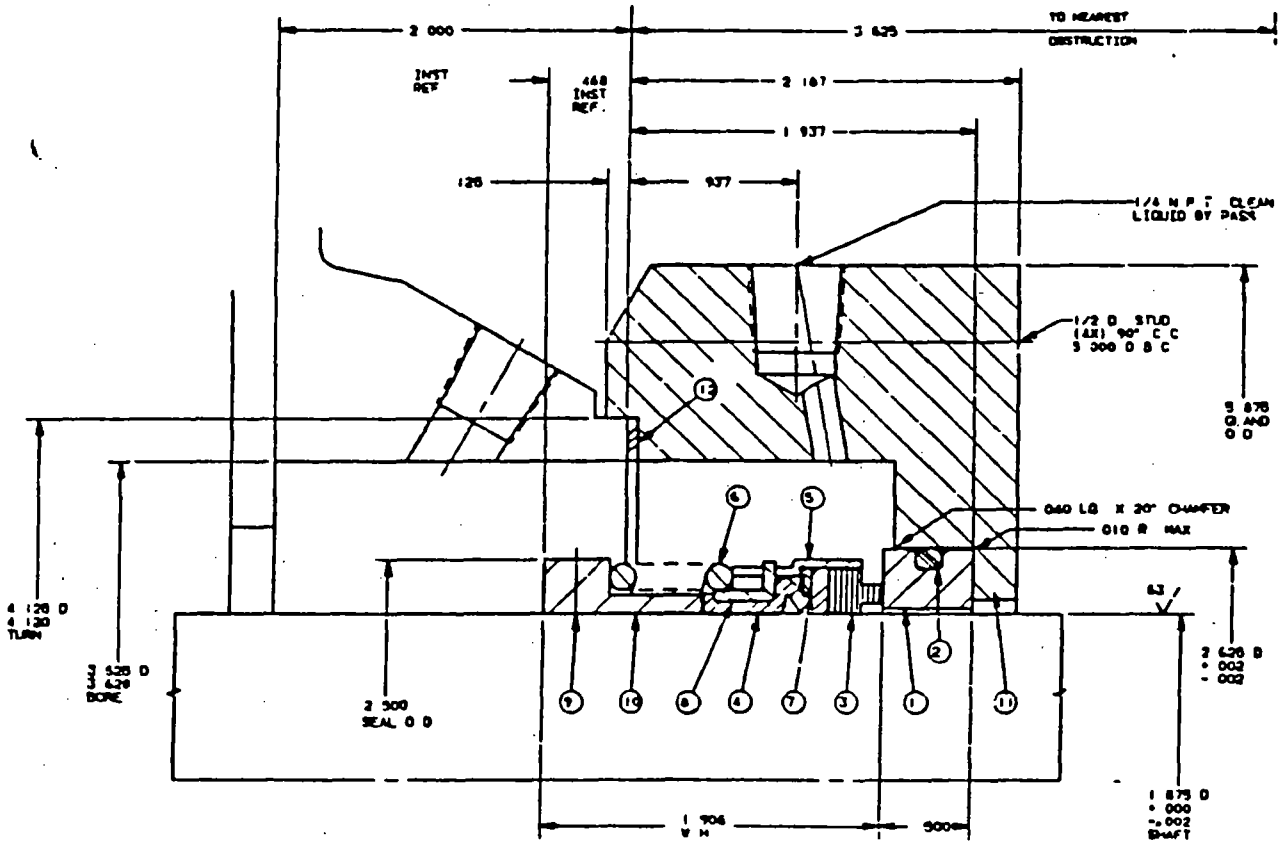

ITEM	COMPONENT	DESCRIPTION	MATERIAL
1	**	MATING RING	CERAMIC
2	0000 229	O-RING	VITON
3	D 1875 121	PRIMARY RING	CARBON
4	D 1875 163	BELLOWS	VITON
5	D 1875 060	RETAINER	316 SS
6	***	SPRING	316 SS
7	D 1875 312	DISC	316 SS
8	D 1875 030	DRIVE BAND	316 SS
9	1110 3204 030	SET SCREW	316 SS
10	D 1875 305	DRIVE COLLAR	316 SS
11	BY DURCO	GLAND PLATE ASSY	D20
12	BY DURCO	GASKET	VITON

** D-1875-423 (METAL)
D-1875-421 (CER)

*** 2869 (18-6 S S)
3410 (316 S S)
3400 (CARP #20)

S/S CF-SP-46834

SEAL ASS'Y NO. D-1875-712 (WITH COLLAR) D-1875-373 (LESS COLLAR)
NTS DS ASS'Y NO.

BILL OF MATERIALS NUMBER
COMPLETE
SEAL NO
NTS NO
ASS'Y | ITEMS | NUMBER

EQUIPMENT REFERENCE	CUSTOMER INFORMATION
UNIT BY: DURIPON	CUSTOMER: DURIPON
EQUIPMENT TYPE: ☒ PUMP ☐ AGITATOR ☐ COMPRESSOR ☐ OTHER	P O NO.
	END USER:
	LOCATION:
TOOL/SIZE: MARK II / GROUP II	REQ NO
SERIAL NO.	INSTALLED AT

SEAL DATA

SEAL DESCRIPTION	MATERIAL CODE
AD91	X/X15010101

SERVICE DATA

FLUID	WATER
TEMPERATURE	70 F
SHAFT SPEED	3600
SP GR	1.00

REFERENCE DATA	DRAWN	DATE	CHK'D	APP'D	SCALE	INST C
CF-SP-46834 E P. #329-6712	9 K	011888	B K	A F	2 1	

FILE REFERENCE	CAT	DRAWING No.	ISSUE
PA-40879	MG 01	C	H-SP-4257

CAD ENGINEERED

SEAL SIZE: 1 875 D
SEAL TYPE: 1 (OVERSIZE BOX)

DRAWING SHOWING FMS COVER NOT AVAILABLE

THE PUMP COMPANY
PO# 12094
DURCO# AOP68544

THE FOLLOWING NOTES ARE IMPORTANT AND MUST BE OBSERVED FOR CORRECT SEAL INSTALLATION AND OPERATION

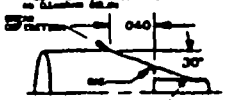

JOHN CRANE
International Sealing Systems
6400 W Dakton Street, Morton Grove
Illinois U S A 60053-0405

DUTY MASTER ALTERNATING CURRENT MOTORS

SQUIRREL-CAGE INDUCTION

ENCLOSURE: TOTALLY ENCLOSED

COOLING: FAN COOLED

MOUNTING: FOOT

FRAME SIZE
284TS

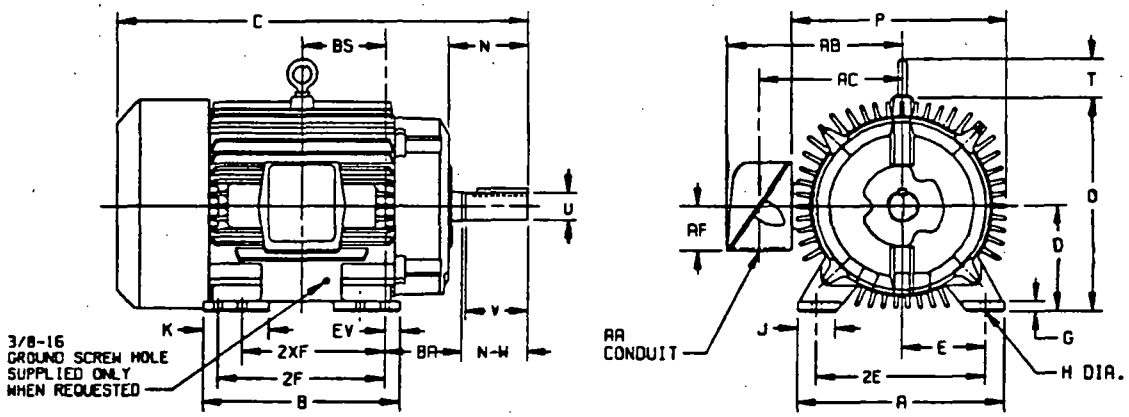

DIMENSIONS ARE IN INCHES

A	D(1)	E	G	H	J	K	O	P	T	C.I. TERMINAL BOX				BA	EV
										AA	AB	AC	AF		
13.7	7.00	5.50	0.75	0.56	2.50	----	14.7	14.8	2.44	1.50	12.6	10.1	3.00	4.75	1.00

C	BS	B	2F	(3) 2XF	N	SHAFT AND KEY					WEIGHT LBS. (4)
						N-W(5)	U(2)	V	SQ.	LGTH.	
26.0	5.50	13.0	----	9.50	3.62	3.25	1.62	3.00	0.37	1.88	475.0

(1) "D" VARIES — 250T - 320T +.00, -.03. / 360T - 440T +.00, -.06.

(2) "U" VARIES — UP TO 1.625 DIA. +.0000, -.0005 / 1.625 AND LARGER +.000, -.001.

(3) ALL FRAMES HAVE EIGHT MOUNTING HOLES FOR DUAL MOUNTING.

(4) MOTOR WEIGHTS MAY VARY BY 15% DEPENDING UPON RATING.

(5) "N-W" VARIES +.00, -.25.

CONDUIT BOX LOCATED ON OPPOSITE SIDE WHEN F-2,W-1, W-4,W-5,W-7, OR C-1 MOUNTING IS SPECIFIED.

IF MOUNTING CLEARANCE DETAILS ARE REQUIRED, CONSULT FACTORY.

MAXIMUM PERMISSIBLE SHAFT RUNOUT WHEN MEASURED AT END OF STD. SHAFT EXTENSION IS .002 T.I.R. UP TO AND INCLUDING 1.625 DIA. AND .003 T.I.R. 1.625 DIA. TO 5 INCH DIA.

CERTIFIED FOR- THE PUMP COMPANY					CUSTOMER ORDER- 12094	
FRAME- 284TS	TYPE- TEFC-XT	HP- 25	RPM- 3600	PH- 3	HZ- 60	VOLTS- 460
DURIRON ORDER NUMBER- A0P68544		TAG NUMBER-				
APPROVED BY- Stephen Quinn		ISSUE NUMBER- 1		DATE- 3-5-97		

RELIANCE ELECTRIC CLEVELAND, OHIO 44117 U.S.A.		DIMENSION SHEET 611740-501

THE DURIRON COMPANY, INC.
DAYTON, OHIO
DURCO PUMP PERFORMANCE
CHARACTERISTICS

EYE AREA : 3.5 SQ. IN.
MAX SPHERE: 13/32 IN.
IMPELLER : REVERSE VANE

MARK III RV
2K2X1-10A/8.8750
SPEED: 3500
CURVE NO. 438836

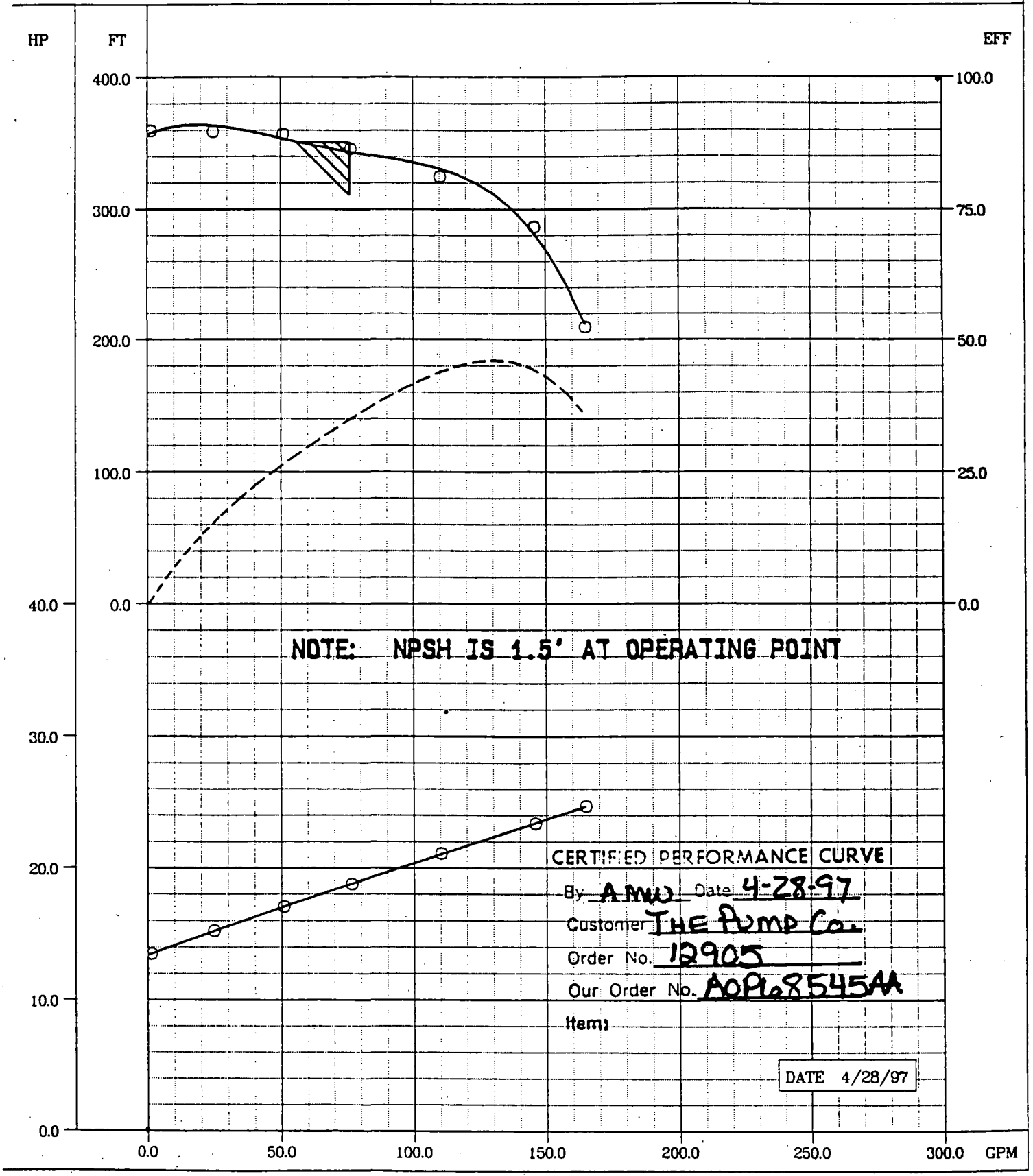

CONSULT YOUR DURCO REPRESENTATIVE FOR MINIMUM FLOW CONSIDERATION

DURCO

THE DURIRON COMPANY, INC.
Rotating Equipment Group, Dayton Ohio

Date: March 5, 1997

The Pump Company
Attn. Document Control
4725 Stockholm Court
Charlotte, NC 28210

Customer PO #: **12905**
Durco Order #: **AOP68545**

DURIRON CERTIFIED DOCUMENTATION TRANSMITTAL

STATUS: **FINAL DOCUMENTS** - This order is released and this documentation is a complete and final set, unless otherwise noted.

DOCUMENT TITLE	COPIES/REPROS
Durco Data Sheet	1
Hydrostatic Certification	1
Typical Pump Curve	1
Pump Dimensional Drawing	1
Drip Rim Drawing	1
Mechanical Seal Drawing	1
Motor Dimensional Drawing	1
Mark III IOM	3

All drawings being returned to Duriron must be sent to the regional sales office.
Associated regional sales office:

THE DURIRON COMPANY, INC.
1025 Old Roswell Road, Suite 203
Roswell, GA 30076
Attn: C. P. Bellnier

PUMP MODEL	
MARK III <REV. VANE>	2K2X1-10ARV
SIZE	GROUP II
NSI NO.	A05
EIGHT	210

ASING	
ALLOY DCI	
STANDARD	
150FF FLANGE	

REAR COVER/STUFFING BOX	
ALLOY DCI	
SEALSENTRY - FMS	
COVER GASKET	TM

IMPELLER	
IMPELLER GASKET	TFR
TRIM 8.875	MAX: 10.000
REVERSE VANE	DCI

SHAFT	
BUTTWELD SHAFT	ZH<1018/316>

BEARING HOUSING	
MARK IIIA-CI	CAST IRON
OIL BRGS.	OPEN
DURA "BGM" PROTECTORS	W/TRICO OILER

SEAL	
GROUP II	
CRANE	BELLOWS
SINGLE, INT, O-RING	MOUNTED BY DURCO
TYPE 1	CBS OR FMS
X/XF50 1 O10 1	316 SS
ROTARY	CARBON
SEAT	CERAMIC
SEAT MOUNTING	VITON O-RING
SHAFT PACKING	VITON BELLOWS
ETAL PARTS	316 SS
ET SCREWS/SPRINGS	316 SS
LLOWER FLANGE	BY DURCO
0	W/FLUSH TAP

TOR	
IORIZONTAL-RELIANCE	FURN. & MTD. BY DURCO
TEFC-XT, SEVERE DUTY	1.15 SF, CLASS F INS.
3600 RPM	
25 HP	284TS, 3/60/460

BASE	
TYPE A - STANDARD	FOUNDATION MTD
SIZE #258	WGT 234#
STEEL	
STD MTG HARDWARE	SS SHIMS <MOTOR ONLY>
DRIP RIM	PUMP END ONLY
DRILL AND TAP ALL HOLES	

COUPLING
GROUP II GUARD.....STEEL
<SPECIAL PRICING AUTHORIZATION: BOOK >

MISCELLANEOUS
IMPELLER TRIM CHARGE
GLAND DEDUCT
LEVEL B PERFORMANCE TEST
NPSH TEST

CUSTOMER:
THE PUMP COMPANY
4725 STOCKHOLM COURT
CHARLOTTE, NC 28210
USA

DESTINATION:
CHARLOTTE

TAG NUMBER

QUANTITY 1

INQUIRY NO	12905
JOB/PROJ NO	
REQUEST DATE	04/25/97
TERRITORY	WILMINGTON, NC
SALES REP	TOM WICKHAM
PREPARER	C. P. BELLNIER
SERVICE REP	KATHEE J. CALDWELL

OPERATING CONDITIONS

CAPACITY	76 GPM	17.3 CU M/HR
TDH REQUIRED	345 FT	105.2 M
TDH OFFERED	351 FT	107.0 M
H.P.	17.4 HP	13.0 KW
H.P. MAX	24.8 HP	18.5 KW
NPSH AVAILABLE		
NPSH REQUIRED	3.2 FT	1.0 M
SUCT PRESSURE		
CURVE NO		
FLUID PUMPED	WATER	
TEMPERATURE	70 F	21 C
CONCENTRATION		
SOLIDS PERCENT		
SOLIDS DESC		
VISCOSITY	1.0 CP	1.0 CP
SPEC GRAVITY	1.00	1.00

DOCUMENTATION REQUIRED	QTE C/R	APP C/R	REV C/R	FIN C/R
DATA SHEETS				1
PUMP DIMENSIONAL DRAWING				1
PUMP CURVE				1
SEAL DRAWING				1
DRIVER DRAWING				1
IOM				3
PERFORMANCE TEST DATA				1
NPSH TEST DATA				1
10 MIN HYDRO TEST CERTIFICA				1

DURCO ORDER AOP68545

CUSTOMER PO 12905

SERIAL NUMBER 438836

PROMISE DATE _____

DURCO

The Pump Company INCORPORATED

4725 Stockholm Ct.
Charlotte, NC 28217
Fax: 704/554-8230
Tel: 704/552-1414

When performance counts...

HERITAGE ENVIRONMENTAL
DURCO MARK III GROUP 2K 2X1-10A/87 RV DCI
PO# 66-01-2814

MARK III
Group II

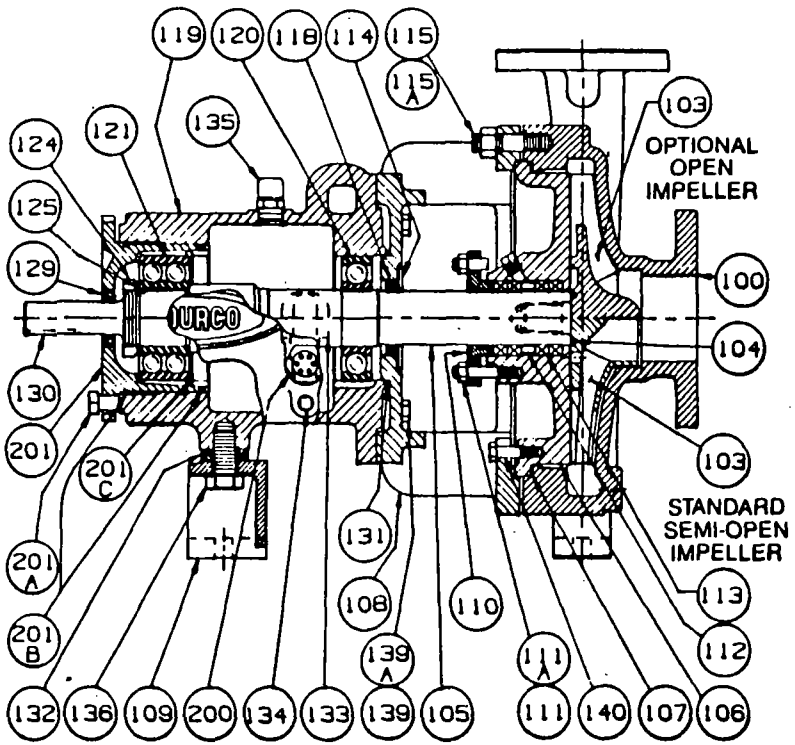

DURCO

CUSTOMER PART NO.		ITEM	GROUP 2K DESCRIPTION (QTY.)	CATALOG NUMBER
	>	100	CASING	AH100-DCI
	>	103	IMPELLER	AH103RV-DCI-87
	*	104	IMPELLER GASKET	2Z104-TFR
	*	105	SHAFT	2Y105-ZH
	>	106	REAR COVER (FMS)	AH106D-DCI
	*	107	REAR COVER GASKET	AH107-TM
	>	108	BEARING HOUSING ADAPTER	YH108-CI
	>	109	BEARING HOUSING FOOT	YF109-CI
		110	GLAND	2Z190H-D20
		111	GLAND FASTENERS (4)	AB111-304
	*	114	INBOARD DEFLECTOR	2Z114-TFEC
		115	CASING STUD W/NUT (8)	AJ115-304
	*	118	INBOARD OIL SEAL (MAGNETIC)	JGZA1875NM3
		119	BEARING HOUSING	2K119-CI
	*	120	INBOARD BEARING	2Z120-SR
	*	121	OUTBOARD BEARING	2K121-SR
	*	124	LOCKNUT	2Z124-SR
	*	125	LOCKWASHER	2Z125-SR
	*	129	OUTBOARD OIL SEAL (MAGNETIC)	JGZA1125N33
		130	COUPLING KEY	2Z130-Z
	*	131	BRG.HSG.ADAPTER GASKET	2Z131-SBR
		132	SPHERICAL WASHER	2Z132-SR
	*	134	DRAIN PLUG	1K134-SR
		136	CAPSCREW-FOOT	2Z136-SR
		139	CAPSCREW-BRG.HSG.ADAPTER(4)	2Z139-SR
		140	CAPSCREW-REAR COVER (2)	AJ140-SR
	*	200	SIGHT GAGE	1K200-SRCD
	*	201	BEARING CARRIER	2K201-DCI
	*	201A	CARRIER SET SCREW	2K201A-SR
	*	201B	CARRIER O-RING (2)	2K201B-NBR
	*	201C	SNAP RING	2K201C-SR
	*		MECH SEAL JOHN CRANE TYPE 1 X/X F50 1 O10 1	

02/28/9

* RECOMMENDED SPARES FOR NORMAL MAINTENANCE
> ADDITIONAL SPARES FOR CRITICAL PUMPS

DURCO

MARK III - 2K UNVENTED BEARING HOUSING KIT w/OILER

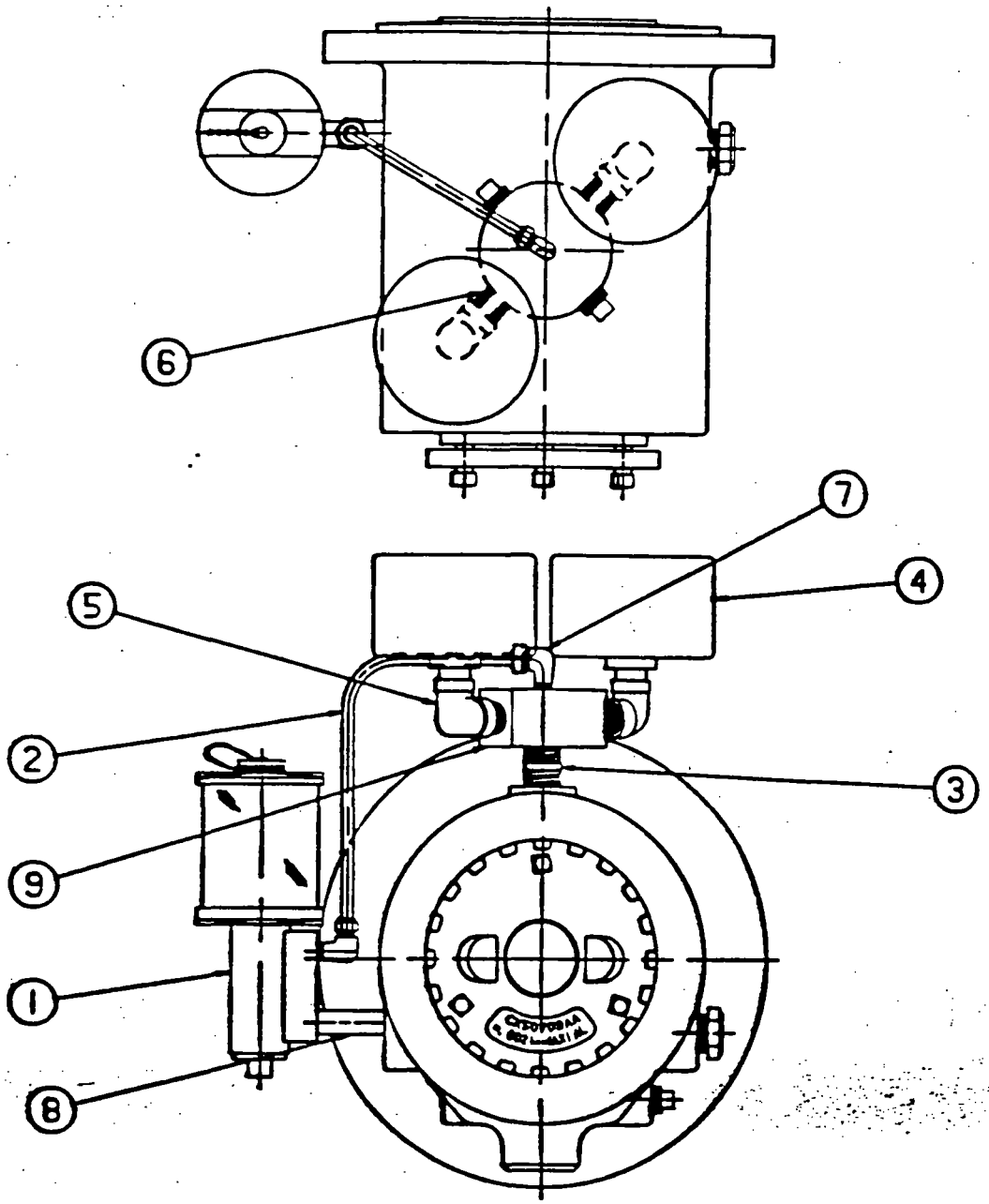

ITEM	REQ'D	MAT'L	PART NO.	DESCRIPTION
1	1		AY53954A	OILER, 5 oz. OIL-RITE STYLE C
2	1		AY45278A134	1/4 O.D.x.035 WALL x13 1/2 TUBING
3	1		Y24888C14	1/2 NPT CLOSE NIPPLE
4	2		AY53955A	EXPAN. CHMBR, 16 IN³, DURA
5	2		Y24889U	3/8 NPT 90° ELBOW
6	2		Y24888G1	3/8 NPT CLOSE NIPPLE
7	2		AY45234J	1/8 NPT MALE TUBE ELBOW, PARKER
8	1		Y24888B2	1/4 NPTx2 NIPPLE
9	1		AY53948A	MANIFOLD- EXPANSION CHAMBER MOUNTING

The Duririon Company, Inc.

PUMP HYDROSTATIC CERTIFICATION

DATE: 03/05/97

PUMP COMPANY THE
P O BOX 240805
CHARLOTTE, NC 28224

Reference:

Your Order No:	**12905**
Our Order No:	**AOP68545**
Components:	**CASING/COVER**
Item No:	

Gentlemen:

This will certify the pressure containing pump wet end parts for the subject order(s) were successfully hydrostatically tested at a minimum pressure of 1.5 times the 100° F pump rating. Parts are passed only if no visual leakage is detected within a minimum period of 10 minutes as required by ANSI B73.1.

Very truly yours,

THE DURIRON COMPANY, INC.

Quality Control

The Duriron Company, Inc.
Rotating Equipment Group
PumpSel 5.7.08

MAR/ 5/1997

PROJECT	:
TAG	:
CUSTOMER	: THE PUMP COMPANY
SERVICE	: WATER
ADDRESS	: CHARLOTTE, NC

— Pump / Process Conditions —

Pump Line	: MARK III (REV. VANE)	
Size	: 2K2X1-10A	
Specific Gravity	: 1.00	
Viscosity	: 1.0	CP
NPSH Available	: 3	FT

— Operating Conditions —

	Initial		Adjusted
Speed	: 3500	RPM	3500
Imp trim	: 8 7/8	IN.	8 7/8
Flow	: 76	GPM	76
Head	: 351	FT	351
Power	: 17.4	HP	17.4
Efficiency	: 39	%	39
NPSH Required	: 3.1	FT	3.1

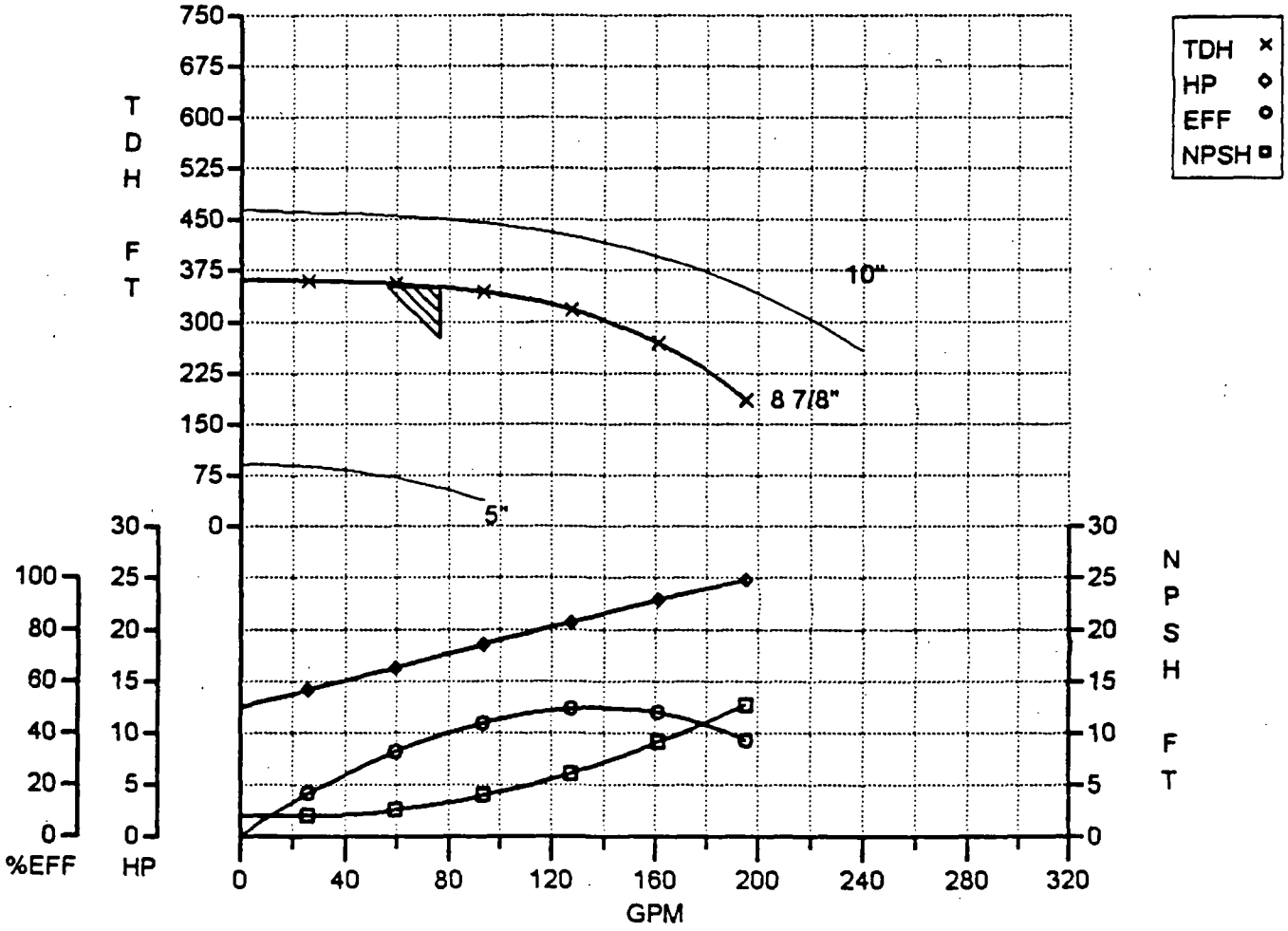

Note: Due to manufacturing variations, for guaranteed NPSHR values, a tolerance of 0.5 Ft. should be added to PumpSel values. See the Online PumpSel User's Guide for more details.

THE PUMP COMPANY
PO# 12905
DURCO# AOP68545
CERTIFIED BY STEPHEN BRITTON

				WEIGHT
DURCO	TYPE	MARK III		210 (95)
	SIZE	2K2X1-10A		
	ALLOY	DCI		
	FLANGE	150FF		
BASEPLATE	TYPE	TYPE A		234 (106)
	SIZE	258		
DRIVER	MFG.	RELIANCE	FRAME 284TS	475 (215)
	HP/RPM	25/3600	TEFC-XT	
	PH/HZ/VOLTS	3/60/460		
SEAL	MFG.	CRANE		
	TYPE	1		
	CODE	X/XF50 1 010 1		
COUPLING	MFG.	OTHER	TYPE GRP II	
	SIZE	GRP II		

TOTAL WEIGHT 919 (417)

MAX FORCES & MOMENTS COMBINED AT CENTER OF PUMP					
FX	FY	FZ	MX	MY	MZ
145 (645)	365 (1624)	285 (1268)	730 (990)	365 (495)	365 (495)

FLANGE LOADING

FR+MR/3 (FR+1.09MR)

SUCTION	DISCHARGE
435(1935)	220(978)

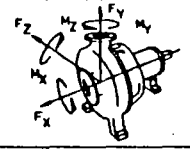

CUSTOMER	THE PUMP COMPANY	
	P.O. NO.	12905
	TAG NO.	
	SERVICE	WATER
DURIRON	ORDER NO.	AOP68545
	SERIAL NO.	438836
	QUOTE NO.	AT970102900
	LINE ITEM	001-00-00

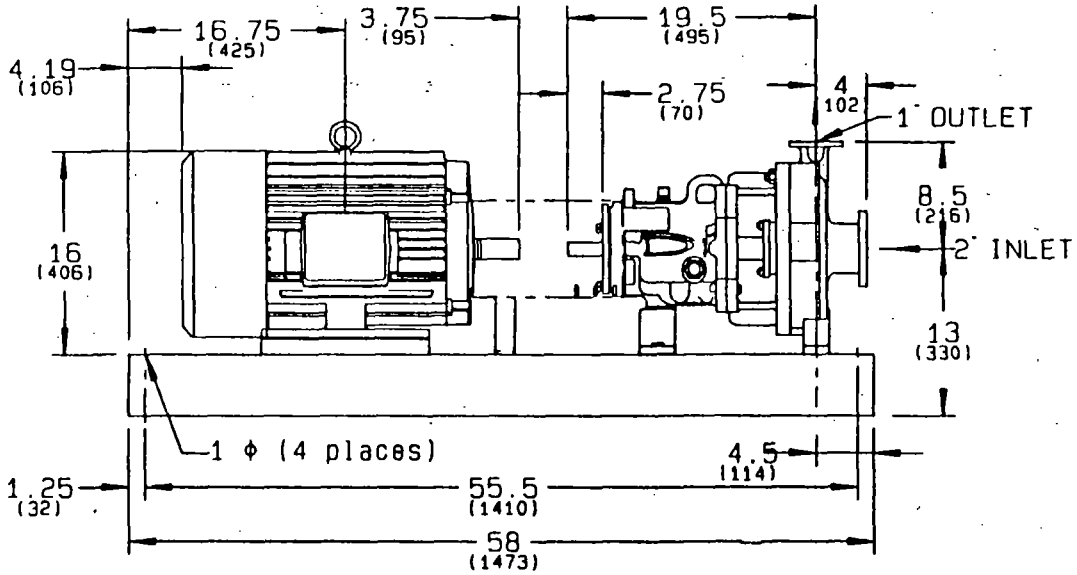

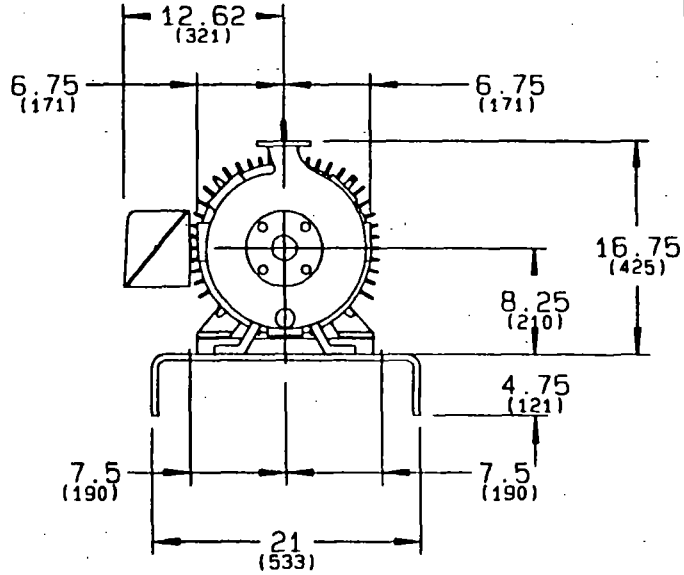

INSTALLATION DIMENSIONS ARE ±.13 (3) UNLESS OTHERWISE NOTED. DIMENSIONS ARE IN INCHES (MILLIMETERS). FORCES ARE IN POUNDS (NEWTONS). MOMENTS ARE IN FOOT-POUNDS (NEWTON-METERS). WEIGHTS ARE IN POUNDS (KILOGRAMS)

TAP CONNECTIONS

TAP	REQ'D SIZE	DESCRIPTION

PUMP INPUT SHAFT: 1.125 ϕ PUMP KEYWAY: .250 X .125
FLANGE DRILLING PER ANSI B16.5 CLASS 150.
Refer to Supplemental Base Drawing for DRIP RIM Details

FINAL DWG BY: Steven Butt DATE: Mar 05 97 ISSUE: /

DURCO

ANSI BASE WITH DRIP RIM

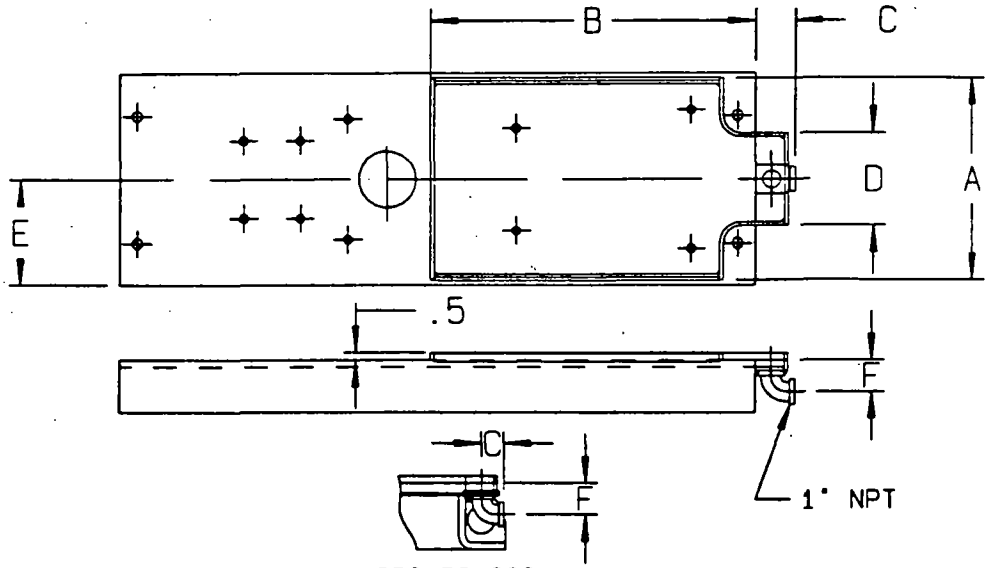

368 TO 398
BASE WITH DRIP RIM

BASE NO	A	B	C	D	E	F
139	14-1/4 (362)	16-3/4 (425)	2-5/8 (67)	6-1/2 (165)	7-1/2 (191)	2-1/4 (57)
148	17-1/4 (438)	16-3/4 (425)	2-5/8 (67)	9-1/2 (241)	9 (229)	2-1/4 (57)
153	20-1/4 (514)	16-3/4 (425)	2-5/8 (67)	12-1/2 (318)	10-1/2 (267)	2-1/4 (57)
245	14-1/4 (362)	22-7/8 (581)	2-5/8 (67)	6-1/2 (165)	7-1/2 (191)	2-1/4 (57)
252	17-1/4 (438)	22-7/8 (581)	2-5/8 (67)	9-1/2 (241)	9 (229)	2-1/4 (57)
258	20-1/4 (514)	22-7/8 (581)	2-5/8 (67)	12-1/2 (318)	10-1/2 (267)	2-1/4 (57)
264	21-1/4 (540)	22-7/8 (581)	2-5/8 (67)	12-1/2 (318)	11 (279)	2-1/4 (57)
268	25-1/4 (641)	22-7/8 (581)	2-5/8 (67)	16-1/2 (419)	13 (330)	2-1/4 (57)
280	25-1/4 (641)	22-7/8 (581)	2-5/8 (67)	16-1/2 (419)	13 (330)	2-1/4 (57)
368	26 (660)	44-3/4 (1137)	2-5/8 (67)	13-1/2 (343)	13 (330)	2-1/4 (57)
380	26 (660)	45 (1143)	2-5/8 (67)	13-1/2 (343)	13 (330)	2-1/4 (57)
398	26 (660)	47-1/2 (1207)	2-5/8 (67)	13-1/2 (343)	13 (330)	2-1/4 (57)

DIMENSIONS IN PARENTHESIS ( ) ARE IN MILLIMETERS.

DURIRON	ORDER NO.	A0P68545	CUSTOMER	THE PUMP COMPANY		
	SERIAL NO.	438836		P.O. NO.	12905	
	QUOTE NO.	AT970102900		TAG NO.		
	LINE ITEM	001-00-00		FINAL DWG BY:	DATE: Mar 05 97	ISSUE: 1

SP1165

No.	ISSUE	REVISIONS
H-SP-4257		

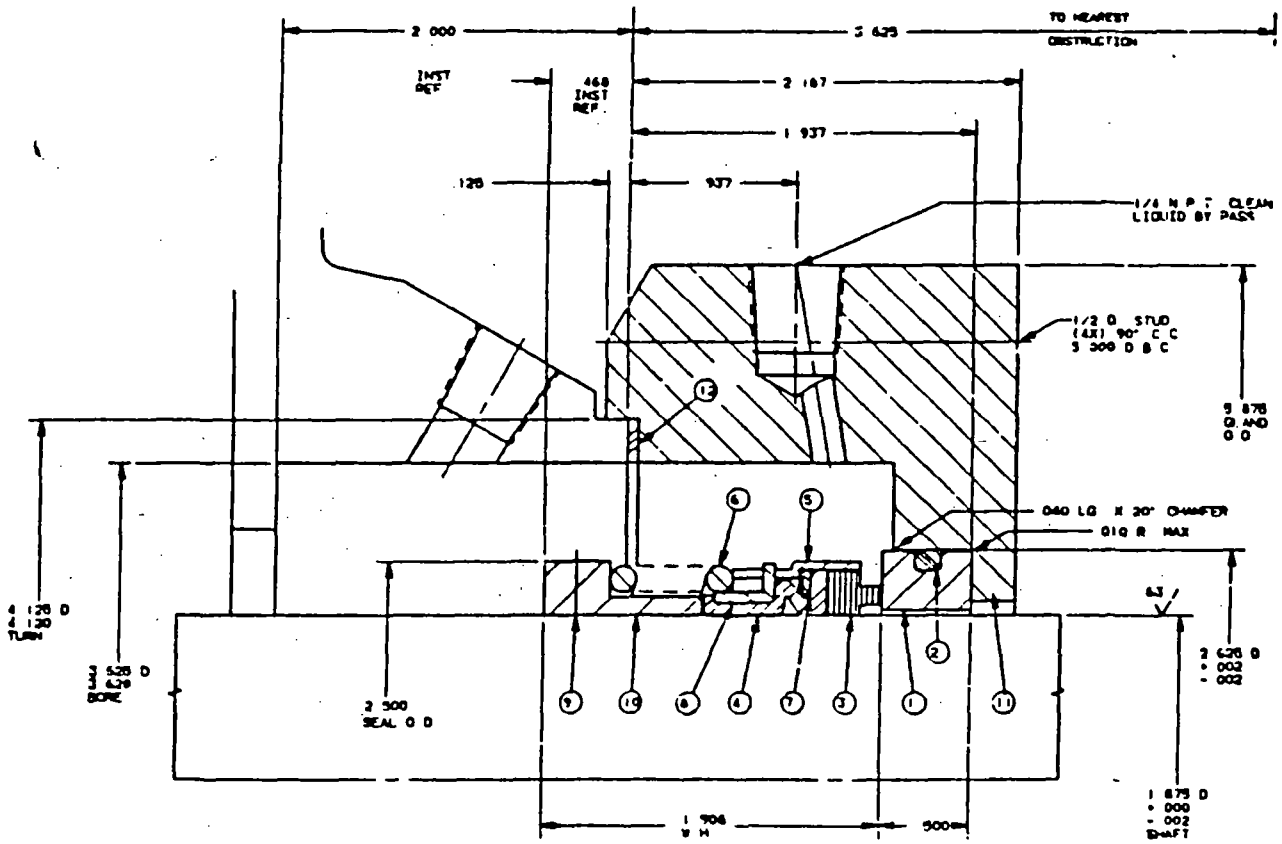

ITEM	COMPONENT	DESCRIPTION	MATERIAL	QTY
1	**	MATING RING	CERAMIC	1
2	0000 229	O-RING	VITON	1
3	D 1875 121	PRIMARY RING	CARBON	1
4	D 1875 163	BELLOWS	VITON	1
5	D 1875 095	RETAINER	316SS	1
6	***	SPRING	316SS	1
7	D 1875 312	DISC	316SS	1
8	D 1875 030	DRIVE BAND	316SS	1
9	1110 3204 000	SET SCREW	316SS	2
10	D 1875 305	DRIVE COLLAR	316SS	1
11	BY DURCO	GLAND PLATE ASSY	D20	1
12	BY DURCO	GASKET	VITON	1

** D-1875-823 (METAL)
D-1875-821 (CER)

*** 2869 (18-8 S S)
3410 (316 S S)
3400 (CARP #20)

S/S CF-SP-46834

SEAL ASS'Y NO. D-1875-712 (WITH COLLAR) D-1875-373 (LESS COLLAR)
MTG RG ASS'Y NO.

BILL OF MATERIALS NUMBER
COMPLETE
SEAL NO
MTG RG
ASS'Y | ITEMS | NUMBER

EQUIPMENT REFERENCE
UNIT BY: DURIPON
EQUIPMENT TYPE: ☒ PUMP ☐ AGITATOR ☐ COMPRESSOR ☐ OTHER
FOOD/SIZE: MARK II / GROUP II

CUSTOMER INFORMATION
CUSTOMER: DURIPON
P O NO.
END USER
LOCATION
REQ NO

SEAL DATA
SEAL DESCRIPTION: AD91
MATERIAL CODE: X/XF5010101

SERVICE DATA
FLUID: WATER
TEMPERATURE: 70 F
SHAFT SPEED: 3600
SP GR: 1.00

REFERENCE DATA	DRAWN	DATE	CHK'D	APP'D	SCALE	INST CODE
CF-SP-46834 E P 6329-8712	B K	011888	B K	A F	2 1	

PA-40879 | FILE REFERENCE: MG 01 | CAT: C | DRAWING No.: H-SP-4257 | ISSUE

CAD ENGINEERED

SEAL SIZE: 1 875 D
SEAL TYPE: 1 (OVERSIZE BOX)

THE PUMP COMPANY
PO# 12905
DURCO# AOP68545

DRAWING SHOWING FMS COVER NOT AVAILABLE

THE FOLLOWING NOTES ARE IMPORTANT AND MUST BE OBSERVED FOR CORRECT SEAL INSTALLATION AND OPERATION

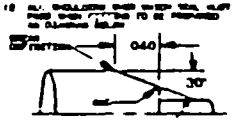

JOHN CRANE
International Sealing Systems
6400 W Dakton Street Norton Grove
Illinois U S A 60053-0805

DUTY MASTER ALTERNATING CURRENT MOTORS

SQUIRREL-CAGE INDUCTION

ENCLOSURE: TOTALLY ENCLOSED

COOLING: FAN COOLED

MOUNTING: FOOT

FRAME SIZE
284TS

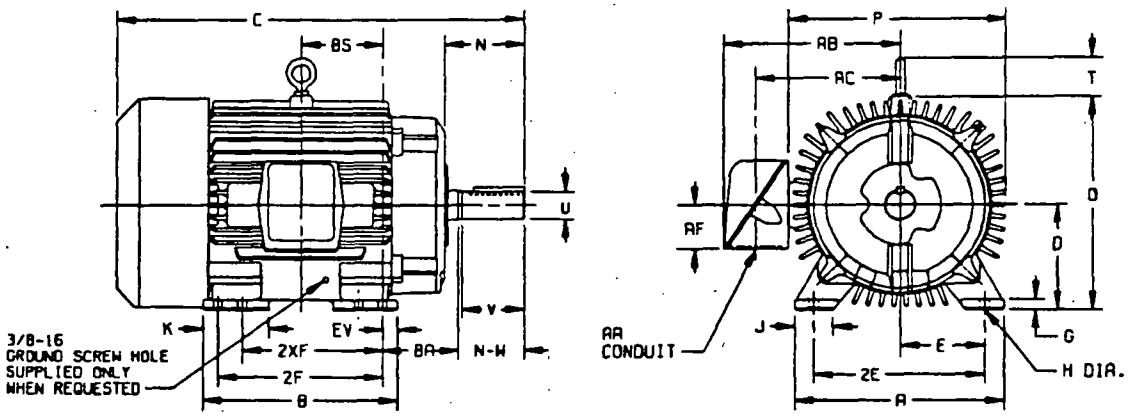

DIMENSIONS ARE IN INCHES

A	D(1)	E	G	H	J	K	O	P	T	C.I. TERMINAL BOX				BA	EV
										AA	AB	AC	AF		
13.7	7.00	5.50	0.75	0.56	2.50	----	14.7	14.8	2.44	1.50	12.6	10.1	3.00	4.75	1.00

C	BS	B	2F	(3) 2XF	N	SHAFT AND KEY					WEIGHT LBS. (4)
						N-W(5)	U(2)	V	SQ.	LGTH.	
26.0	5.50	13.0	----	9.50	3.62	3.25	1.62	3.00	0.37	1.88	475.0

(1) "D" VARIES — 250T - 320T +.00, -.03. / 360T - 440T +.00, -.06.

(2) "U" VARIES — UP TO 1.625 DIA. +.0000, -.0005 / 1.625 AND LARGER +.000, -.001.

(3) ALL FRAMES HAVE EIGHT MOUNTING HOLES FOR DUAL MOUNTING.

(4) MOTOR WEIGHTS MAY VARY BY 15% DEPENDING UPON RATING.

(5) "N-W" VARIES +.00, -.25.

CONDUIT BOX LOCATED ON OPPOSITE SIDE WHEN F-2,W-1, W-4,W-5,W-7, OR C-1 MOUNTING IS SPECIFIED.

IF MOUNTING CLEARANCE DETAILS ARE REQUIRED, CONSULT FACTORY.

MAXIMUM PERMISSIBLE SHAFT RUNOUT WHEN MEASURED AT END OF STD. SHAFT EXTENSION IS .002 T.I.R. UP TO AND INCLUDING 1.625 DIA. AND .003 T.I.R. 1.625 DIA. TO 5 INCH DIA.

CERTIFIED FOR- THE PUMP COMPANY					CUSTOMER ORDER- 12905	
FRAME- 284TS	TYPE- TEFC-XT	HP- 25	RPM- 3600	PH- 3	HZ- 60	VOLTS- 460
DURIRON ORDER NUMBER- AOP68545		TAG NUMBER-				
APPROVED BY- [signature]		ISSUE NUMBER- 1		DATE- 3-5-97		

RELIANCE ELECTRIC CLEVELAND, OHIO 44117 U.S.A.		DIMENSION SHEET 611740-501

DURCO MARK III

Recognized Worldwide As The Premier Name In ANSI Chemical Process Pumps

Installation, Operation, and Maintenance

DURCO®

- ANSI Standard
- Sealmatic
- Unitized Self-Priming
- Recessed Impeller
- Lo-Flo

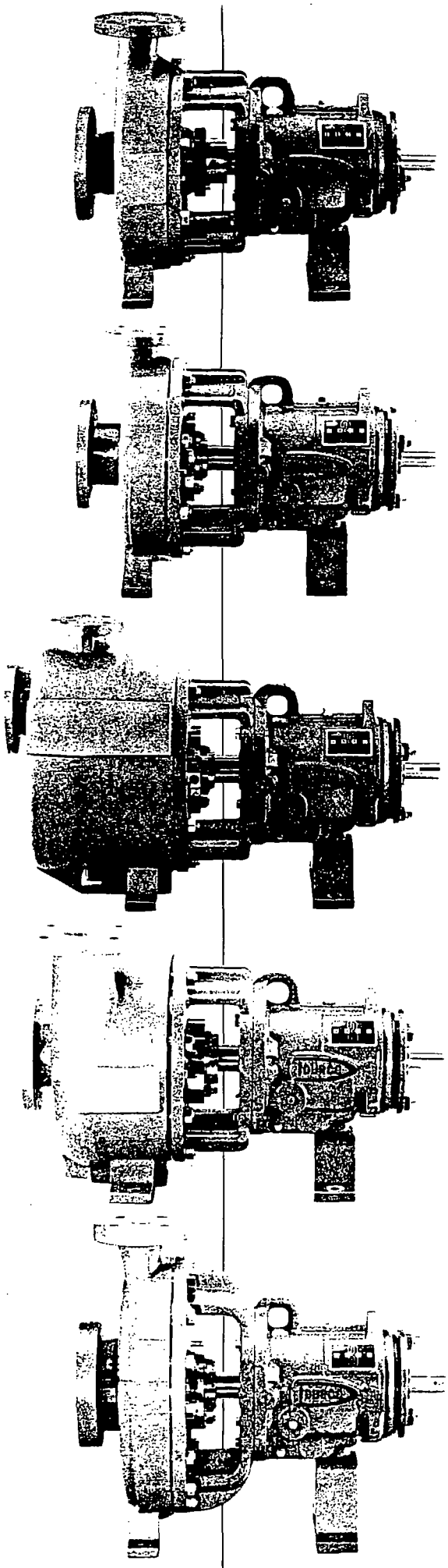

Bulletin P-10-502b (E)

TABLE OF CONTENTS

1.0 Introduction 1

2.0 Safety considerations 2

3.0 Overview
- 3.1 Warranty statement 4
- 3.2 Nameplate 4
- 3.3 Storage
  - Short term 4
  - Long term 5
- 3.4 Lifting pumps and assemblies 5

4.0 MARK III ANSI Standard Pump
- 4.1 General description of pump 7
- 4.2 Installation
  - Protection of openings and threads 8
  - Rigid baseplates – overview 8
  - Installation and Alignment
    - Durco's Factory Alignment Procedure 8
    - Recommended Procedure for Baseplate Installation and Final Field Alignment 9
      - New Grouted Baseplates 9
      - Existing Grouted Baseplates 10
      - Stilt Mounted Baseplates 10
  - Piping connection – Suction/discharge 10
  - Piping connection – Seal/packing support system 12
  - Piping connection – Bearing housing cooling system 13
  - Piping connection – Support leg cooling for centerline mounting option 13
  - Piping connection – Heating/cooling fluid for jacketed cover/casing 14
  - Piping connection – Oil mist lubrication system 14
  - Coupling 15
    - Coupling guard maintenance 15
    - C-flange motor adapter – Special considerations 15
- 4.3 Operation
  - Rotation check 16
  - Pre start-up checks 16
    - (See Maintenance Section for details)
    - Impeller setting 16
    - Shaft seal 16
    - Seal/packing support system 16
    - Bearing lubrication 16
    - Bearing housing cooling system 16
    - Support leg cooling for centerline mounting option 16
    - Heating/cooling fluid for jacketed cover/casing 16
- 4.4 Start-up considerations
  - Ensuring proper NPSHA 17
  - Minimum flow 17
  - Starting the pump and adjusting flow 17
  - Operation in sub-freezing conditions 18
  - Shutdown considerations 18
  - Troubleshooting 18
- 4.5 Maintenance
  - Preventive maintenance 22
  - Need for maintenance records 22
  - Need for cleanliness 22
  - Disassembly 22
  - Cleaning/inspection 25
  - Critical measurements and tolerances 25
  - Assembly 26
  - Power end assembly
    - Bearing installation 27
    - Lip seals 29
    - Labyrinth seals 29
    - Magnetic seals 29
    - Bearing carrier/power end assembly 29
  - Wet end assembly
    - Cartridge mechanical seals
      - Seal installation 30
      - Rear cover plate installation 30
      - Impeller installation and clearance setting 30
    - Component-type mechanical seal
      - Determination of seal location 30
      - Gland installation 30
      - Seal installation 30
      - Rear cover plate installation 31
      - Impeller installation and clearance setting 31
    - Packing with split gland
      - Rear cover plate installation 31
      - Impeller installation and clearance setting 31
      - Packing/gland installation 31
    - Packing with one-piece gland
      - Gland installation 31
      - Impeller installation and clearance setting 32
      - Packing installation 32
  - Bearing lubrication
    - Oil bath 32
    - Grease
      - Regreaseable bearings 33
      - Shielded bearings 33
      - Sealed bearings 33
    - Oil mist 33
  - Reinstallation 33
- 4.6 Spare parts 34
  - How to order spare parts 34

5.0 MARK III Sealmatic Pump
5.1 General description of pump 38
5.2 Overview
Repeller function.....39
Design difference.....39
Seal options
Packing - Option A 40
Checkmatic - Option B 40
Dry Running Seals - Option C 41
5.3 Operation
General information 41
Start-Up 41
5.4 Maintenance
Disassembly of Group 2 Pumps 42
Disassembly of Group 3 Pumps 42
Reassembly - Sealmatic
with Packing 42
Reassembly - Sealmatic with
Checkmatic Seal 42
Reassembly - Sealmatic with
Dry Running Seal 42
5.5 Miscellaneous information 43
Repeller selection instructions.....43
5.6 Spare parts 44

6.0 MARK III Unitized Self-Priming Pump
6.1 General description of pump 45
6.2 Pump installation and operation 46
6.3 Spare parts 48

7.0 MARK III Recessed Impeller Pump
7.1 General description of pump 49
7.2 Setting the impeller.....50
7.3 Spare parts 50

8.0 MARK III Lo-Flo Pump
8.1 General description of pump 51
8.2 Setting the impeller.....51
8.3 Spare parts 52

Appendix A. IOM for C-flange motors adapters
Appendix B. Assembly of stilt and spring mounted baseplates
Appendix C. Critical measurements and tolerances
Appendix D. Installation/clearance setting of reverse vane impeller
Appendix E. Installation/clearance setting of front vane open impeller
Appendix F. Removal/installation of seals with SealSentry™ FMI seal chamber
Appendix G. Bearing isolation maintenance instructions
Appendix H. Installation of repeller cover, repeller, cover, impeller for Sealmatic Pump
Appendix I. Allowable nozzle loads
Appendix J. Sources of additional information

Section 1.0 INTRODUCTION

This bulletin contains instructions and guidelines for the installation, operation, and maintenance of the Durco MARK III ANSI Standard Pump, the MARK III Sealmatic Pump, the MARK III Unitized Self-Priming Pump, the MARK III Recessed Impeller Pump and the MARK III Lo-Flo Pump.

These pumps all use the MARK IIIA standard power end, or the ANSI 3A™ upgraded power end. The "A" designation signifies that both of these power ends are the new improved design that was released in 1995. Information concerning the older MARK III and ANSI 3 power ends is also available in the IOM.

There are many factors affecting the successful installation, operation, and maintenance of a pump. From one pump to the next there is typically significant variation in these factors. This makes it impossible to create a bulletin that covers all situations. Therefore, the information contained herein is meant to serve only as a general guideline. If detailed questions or problems arise, contact your nearest Durco Regional Sales Office or Distributor/ Representative.

It is extremely important that this entire bulletin be read prior to installation or start-up of the pump. This is important for safety, for proper performance of the pump, and for maximum Mean Time Between Planned Maintenance (MTBPM).

THE COMPANY

Durco is recognized worldwide as the premier name in ANSI chemical process pumps. Durco's modern facilities use state-of-the-art equipment and sophisticated quality control techniques. Durco provides technical support and special services specific to the needs of chemical processors. Durco is proud of earning preferred supplier status with many of the world's leading chemical processing companies. Engineered and manufactured, sold and serviced to ISO 9001 quality certification, Durco MARK III chemical service process pumps are truly world class products. And with more than eighty years of experience in serving the needs of the worldwide chemical process industries, Durco has become the unchallenged leader in hydraulic design engineering, materials expertise and application know-how. Committed to continuous quality improvement, Durco controls the complete production cycle – from melting and casting, to cellular manufacturing to assembly, and testing.

The advanced design and precision manufacture of the rugged, heavy-duty MARK III chemical service pump significantly enhance bearing and seal life, thereby extending mean time between planned maintenance (MTBPM). Its exclusive features provide significant performance benefits for chemical pump users. Most notable among these are:

1. The exclusive reverse vane impeller offers important performance-enhancing, maintenance-reducing advantages.
2. The exclusive external micrometer shaft adjustment provides dead accurate setting of impeller clearance in seconds.
3. The ANSI 3A™ power end, SealSentry™ family of seal chambers, Ultralign™ pump/motor shaft alignment system and the BaseLine™ family of baseplates are building blocks for improved MTBPM.

Your Durco sales engineer or authorized stocking distributor will be happy to review all the advanced features that make the MARK III the leader in chemical pumping technology.

Section 2.0 SAFETY CONSIDERATIONS

The Durco MARK III process pump has been designed and manufactured for safe operation. In order to ensure safe operation, it is very important that this manual be read in its entirety prior to installing or operating the pump. Durco shall not be liable for physical injury, damage or delays caused by a failure to observe the instructions for installation, operation and maintenance contained in this manual.

Remember that every pump has the potential to be dangerous, because of the following factors:
- parts are rotating at high speeds
- high pressures may be present
- high temperatures may be present
- highly corrosive and/or toxic chemicals may be present

Paying constant attention to safety is always extremely important. However, there are often situations that require special attention. These situations are indicated throughout this book by the following symbols:

⚠ DANGER

DANGER – Immediate hazards which WILL result in severe personal injury or death.

⚠ WARNING

WARNING – Hazards or unsafe practices which COULD result in severe personal injury or death.

⚠ CAUTION

CAUTION – Hazards or unsafe practices which COULD result in minor personal injury or product or property damage.

Several important general precautions are listed below:

1. *DO NOT RUN EQUIPMENT DRY OR START THE PUMP WITHOUT THE PROPER PRIME (Casing Flooded).*

2. *DO NOT EXCEED THE MAXIMUM DESIGN PRESSURE (MDP) AT THE TEMPERATURE SHOWN ON PUMP NAMEPLATE.* See Figure 1 for general pressure versus temperature ratings of common alloys.

3. *ALWAYS LOCK OUT POWER TO THE DRIVER BEFORE PERFORMING PUMP MAINTENANCE.*

4. *NEVER OPERATE THE PUMP WITHOUT COUPLING GUARD AND ALL OTHER SAFETY DEVICES CORRECTLY INSTALLED.*

5. *DO NOT APPLY HEAT TO DISASSEMBLE THE PUMP OR TO REMOVE THE IMPELLER.* Entrapped liquid could cause an explosion.

6. *NEVER OPERATE THE PUMP FOR MORE THAN A SHORT INTERVAL WITH THE DISCHARGE VALVE CLOSED.* The length of the interval depends on several factors including the nature of the fluid pumped and its temperature. This interval must be determined by the customer's Engineering personnel.

7. *NEVER OPERATE THE PUMP WITH THE SUCTION VALVE CLOSED.*

8. *EXCESSIVE PUMP NOISE OR VIBRATION* may indicate a dangerous condition. The pump must be shut down immediately.

9. *DO NOT OPERATE THE PUMP FOR AN EXTENDED PERIOD BELOW THE RECOMMENDED MINIMUM FLOW* (Figure 20).

10. *THE PUMP SHAFT MUST TURN CLOCKWISE WHEN VIEWED FROM THE MOTOR END.* It is absolutely essential that the rotation of the motor be checked before installation of the coupling spacer and starting the pump. Incorrect rotation of the pump for even a short period of time can unscrew the impeller, which can cause severe damage.

NOTE: **ALWAYS COORDINATE REPAIR ACTIVITY WITH OPERATIONS PERSONNEL, AND FOLLOW ALL PLANT SAFETY REQUIREMENTS AND APPLICABLE SAFETY AND HEALTH LAWS/REGULATIONS.**

FIGURE 1
Pressure-Temperature Limits By Alloy

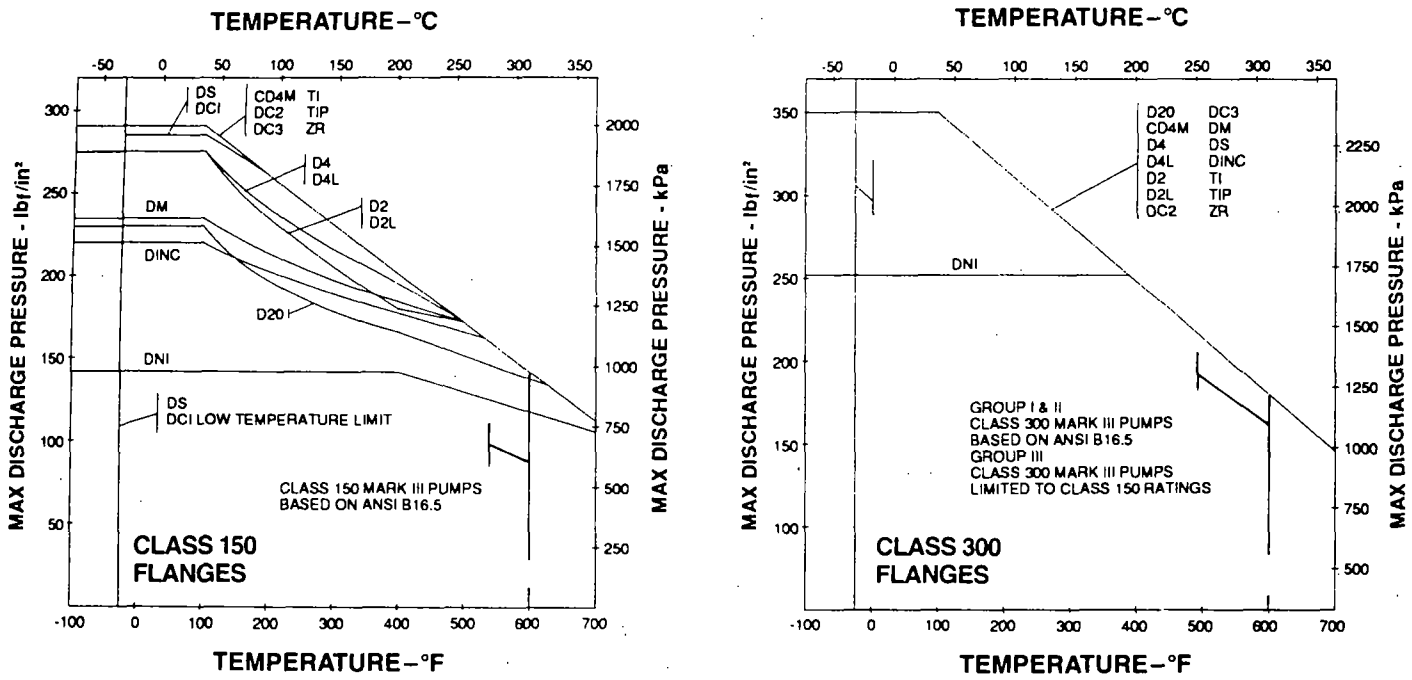

FIGURE 2
Alloy Cross-Reference Chart

Durco Designation	Durco Symbol	ACI Designation	Equivalent Wrought Designation	ASTM Specifications
Ductile Iron	DCI	None	None	A395
Carbon Steel	DS	None	Carbon Steel	A216 Gr. WCB
Durco CF-8M	D4	CF-8M	316	A744, Gr. CF-8M
Durcomet 100	CD4M	CD-4MCu	Ferralium®	A744, Gr. CD-4MCu
Durimet 20	D20	CN-7M	Alloy 20	A744, Gr. CN-7M
Durcomet 5	DV	None	None	None
Durco CY-40	DIN	CY-40	Inconel® 600	A744, Gr. CY-40
Durco M-35	DM	M-35-1	Monel® 400	A744, Gr. M-35-1
Nickel	DNI	CZ-100	Nickel 200	A744, Gr. CZ-100
Chlorimet 2	DC2	N-7M	Hastelloy® B	A494, Gr. N-7M
Chlorimet 3	DC3	CW-6M	Hastelloy® C	A494, Gr. CW-6M
Duriron®	D	None	None	A518
Durichlor 51®	D51	None	None	A518
Superchlor®	SD51	None	None	A518
Durco DC-8	DC8	None	None	None
Titanium	Ti	None	Titanium	B367, Gr. C-3
Titanium-Pd	Ti-Pd	None	Titanium-Pd	B367, Gr. C-8A
Zirconium	Zr	None	Zirconium	B752, Gr. 702C

® Duriron, Durichlor 51 and Superchlor are registered trademarks of The Duriron Company, Inc.
® Ferralium is a registered trademark of Langley Alloys
® Hastelloy is a registered trademark of Haynes International, Inc.
® Inconel and Monel are registered trademarks of International Nickel Co. Inc.

Section 3.0 OVERVIEW

3.1 WARRANTY STATEMENT

The warranty on your Durco pump is provided in a statement which was sent with the Order Acknowledgement. Please call your Durco Regional Sales Office or Distributor/Representative for a copy of this warranty statement.

3.2 NAMEPLATE

An example of the nameplate used on the MARK III pump is shown below. This nameplate, which is always mounted on the MARK III bearing housing, is shown in Figure 3.

FIGURE 3
How To Identify Durco MARK III Process Pumps

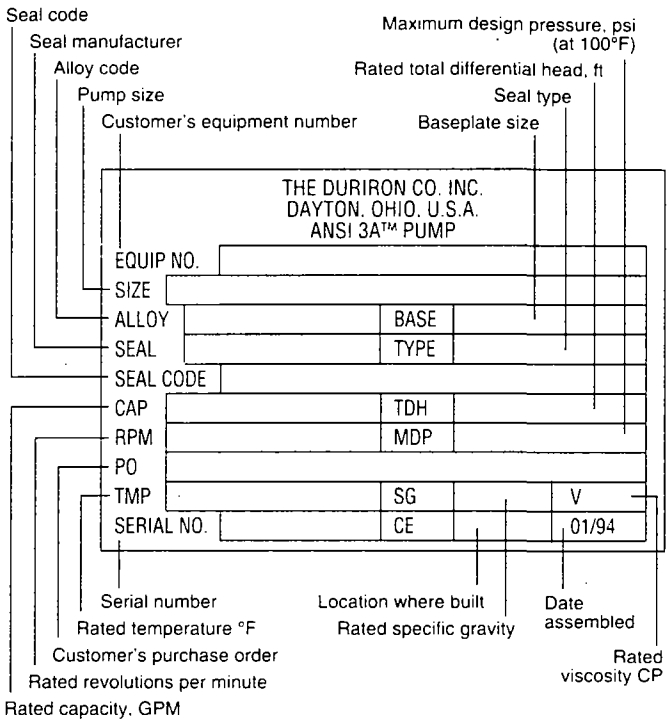

Durco's pump size code is used to indicate the size of the pump. For example, consider the following:

This is a Group 2 pump
MARK III
3 inch suction
2 inch discharge
10 inch max. impeller

2 K 3 X 2 – 10A / 82 RV

Design modification "A"
Impeller trim is 8 and 2/8
Reverse vane impeller

3.3 STORAGE

SHORT TERM STORAGE

Durco's normal packaging is designed to protect the pump during shipment and for dry, indoor storage of two months or less. The procedure followed for this short term storage is summarized below:

Standard Protection for Shipment :

a. Loose unmounted items, including, but not limited to, oilers, packing, coupling spacers, stilts, and mechanical seals are packaged in a water proof plastic bag and placed under the coupling guard. Larger items are cartoned and metal banded to the baseplate. For pumps not mounted on a baseplate, the bag and/or carton is placed inside the shipping carton. All parts bags and cartons are identified with the Durco order number, the customer purchase order number, and the pump item number (if applicable).
b. Inner surfaces of the bearing housing, shaft (area through bearing housing), and bearings are coated with Mobilrama #522 rust inhibitor, or equal. ***NOTE:*** **BEARING HOUSINGS ARE NOT FILLED WITH OIL PRIOR TO SHIPMENT.**
c. Regreasable bearings are packed with grease (Chevron SRI #2).
d. After a performance test, if required, the pump is tipped on the suction flange for drainage (some residual water may remain in the casing). Then, internal surfaces of ferrous casings, covers, flange faces, and the impeller surface are sprayed with Calgon Vestal Labs RP-743m, or equal. Exposed shafts are taped with Polywrap.
e. Flange faces are protected with plastic covers secured with plastic drive bolts. 3/16 in (7.8 mm) steel, or 1/4 in (6.3 mm) wood covers with rubber gaskets, steel bolts, and nuts are available at extra cost.
f. All assemblies are bolted to a wood skid which confines the assembly within the perimeter of the skid.
g. Assemblies with special paint are protected with a plastic wrap.
h. Group 1 and Group 2 bare pumps, when not mounted on baseplates, are packed in hard paper cartons mounted on wood skids.
i. Group 3 bare pumps, when not mounted on baseplates, are bolted to wood skids.
j. All pump assemblies utilizing polycrete baseplates are mounted on wood skids.
k. All assemblies having external piping (seal flush and cooling water plans), etc...are packaged and braced to withstand normal handling during shipment. In some cases components may be disassembled for shipment.

The pump must be stored in a covered, dry location.

LONG TERM STORAGE

Long term storage is defined as more than two months, but less than 12 months. The procedure Durco follows for long term storage of pumps is given below. These procedures are in addition to the short term procedure.

Solid wood skids are utilized. Holes are drilled in the skid to accommodate the anchor bolt holes in the baseplate, or the casing and bearing housing feet holes on assemblies less baseplate. Tackwrap sheeting is then placed on top of the skid and the pump assembly is placed on top of the Tackwrap. Metal bolts with washers and rubber bushings are inserted through the skid, the Tackwrap, and the assembly from the bottom of the skid and are then secured with hex nuts. When the nuts are "snugged" down to the top of the baseplate or casing and bearing housing feet, the rubber bushing is expanded, sealing the hole from the atmosphere. Desiccant bags are placed on the Tackwrap. The Tackwrap is drawn up around the assembly and hermetically (heat) sealed across the top. The assembly is completely sealed from the atmosphere and the desiccant will absorb any entrapped moisture. A solid wood box is then used to cover the assembly to provide protection from the elements and handling. This packaging will provide protection up to twelve months without damage to mechanical seals, bearings, lip seals, etc. due to humidity, salt laden air, dust, etc.

After unpacking, protection will be the responsibility of the user. Addition of oil to the bearing housing will remove the inhibitor. If units are to be idle for extended periods after addition of lubricants, inhibitor oils and greases should be used.

Every three months, the shaft should be rotated approximately 10 revolutions.

3.4 LIFTING PUMPS AND PUMP ASSEMBLIES

Lifting should only be done by trained personnel. Pumps and motors often have integral lifting eyes or eye bolts. These are intended for use in lifting the individual piece of equipment.

⚠ CAUTION

Do not use eye bolts or cast-in lifting lugs to lift pump, motor, and baseplate assemblies.

Before lifting the equipment refer to the pump data sheet for the complete assembly weight.

LIFTING

The following describes how to lift pump components, assembled pumps, or pump, motor and baseplate assemblies. Do not attempt to lift a pump mounted on a baseplate by itself. Only a pump-motor assembly may be lifted once installed on a baseplate.

Pump Components:

Casing (#100): Use a choker hitch pulled tight around the discharge nozzle.

Rear cover (#106): Insert an eye hook in the drilled and tapped hole at the top of the cover. Use either a sling or hook through the eye bolt.

Bearing housing (#119): Group I. Insert a sling between the upper and lower support ribs between the housing barrel and the casing attachment flange. Use a choker hitch when slinging. Caution, make sure there are no sharp edges on the bottom side of the ribs which could cut the sling.

Group 2 and 3. Insert either a sling or hook through the lifting lug located on the top of the housing.

Power end: Same as bearing housing.

Bare Pump: Sling around the pump discharge nozzle. and around the outboard end of the bearing housing with separate slings. Choker hitches must be used at both attachment points and pulled tight. Make sure the completion of the choker hitch on the discharge nozzle is toward the coupling end of the pump shaft as shown in Figure 4. The sling lengths should be adjusted to balance the load before attaching the lifting hook.

Pump, motor and baseplate assembly: If the baseplate has lifting holes cut in the sides at the end, (Type A Group 3, Type D, and Type E bases) insert lifting S hooks at the four corners and use slings or chains to connect to the lifting eye as shown in Figure 5. Do not use slings through the lifting holes.

For other baseplates sling around the pump discharge nozzle, and around the outboard end of the motor frame using choker hitches pulled tight (Figure 6). The sling should be positioned so the weight is not carried through the motor fan housing. Make sure the completion of the choker hitch on the discharge nozzle is toward the coupling end of the pump shaft as shown in Figure 6.

FIGURE 4

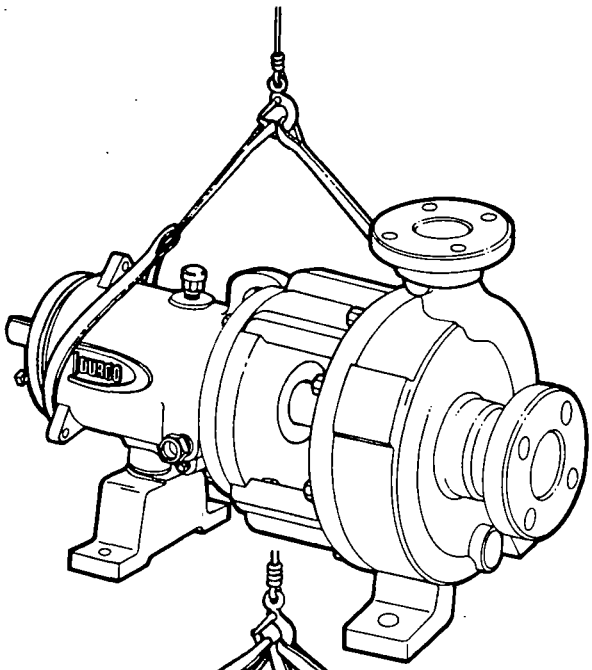

FIGURE 5

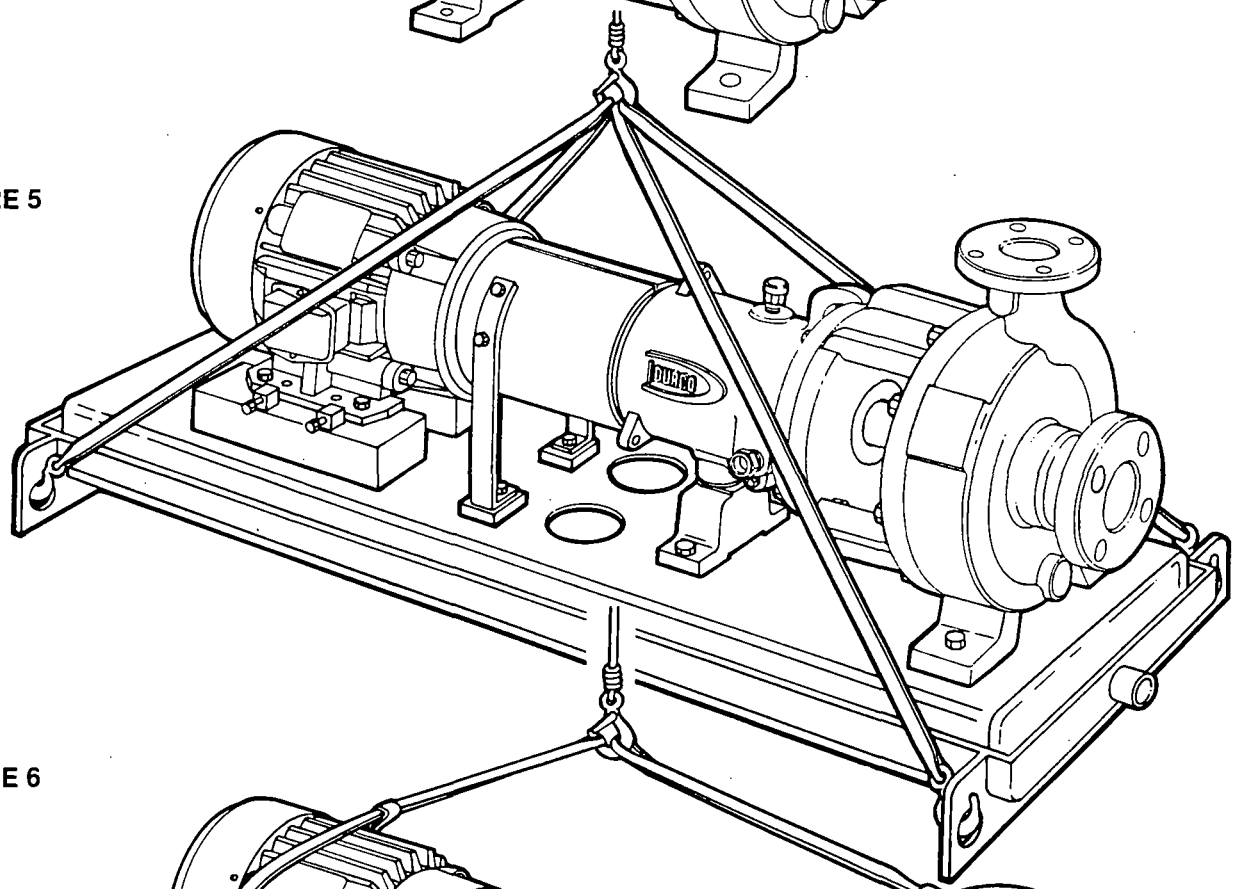

FIGURE 6

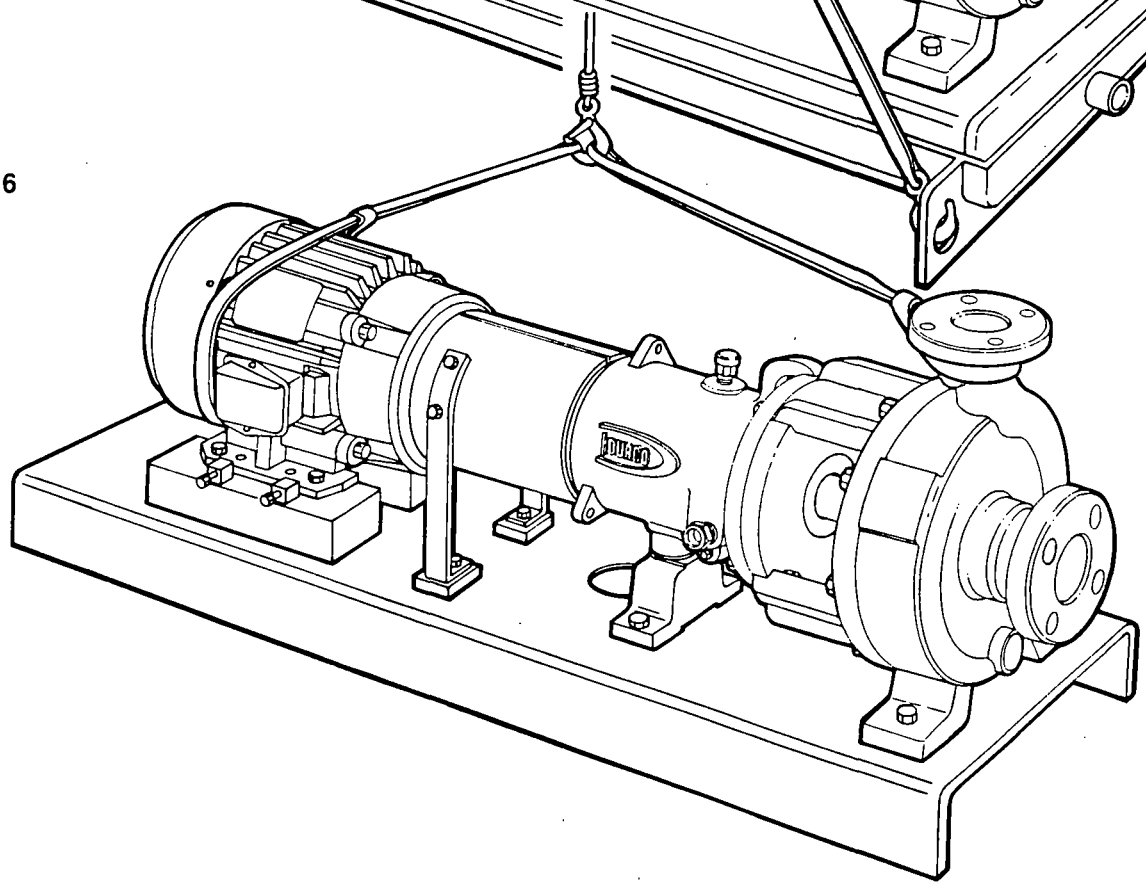

Section 4.0 MARK III ANSI STANDARD PUMP

Note: *Throughout this book all references to pump parts are followed by an item number in parentheses. These item numbers are listed and shown pictorially in the "Spare Parts" section.*

4.1 GENERAL DESCRIPTION OF PUMP

The Durco MARK III chemical process pump is a horizontal, end suction, single stage, centerline discharge, centrifugal pump. It is an "ANSI" standard pump, which means it conforms to the ASME B73.1M ANSI standard.

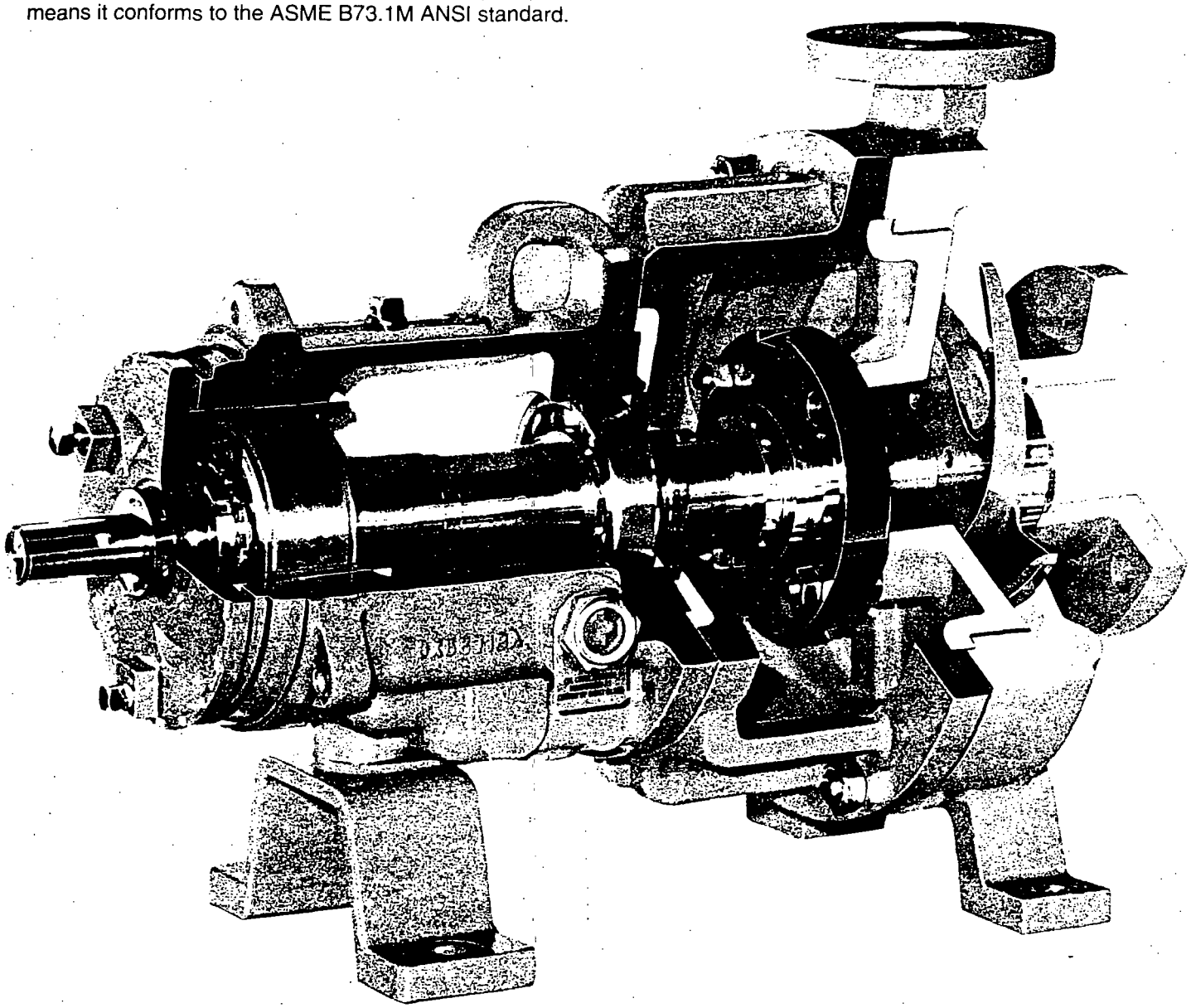

4.2 INSTALLATION

PROTECTION OF OPENINGS AND THREADS

When the pump is shipped all threads and all openings are covered. This protection/covering should not be removed until installation. If, for any reason, the pump is removed from service, this protection should be reinstalled.

RIGID BASEPLATES – OVERVIEW

The function of a baseplate is to provide a rigid foundation under a pump and its driver that maintains alignment between the two. Baseplates may be, generally, classified into two types:

- Foundation-mounted, grouted design (Figure 7)
- Stilt mounted, or free-standing (Figure 8)

FIGURE 7

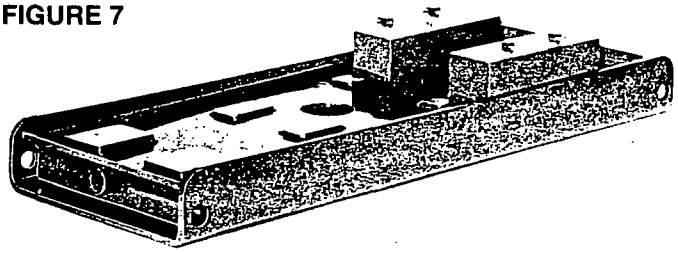

FIGURE 8

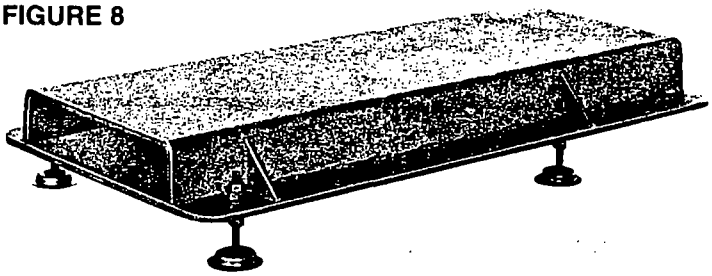

Baseplates intended for grouted installation are designed to use the grout as a stiffening member. Stilt mounted baseplates, on the other hand, are designed to provide their own rigidity. Therefore, the designs of the two baseplates are usually different.

Regardless of the type of baseplate used, it must provide certain functions that ensure a reliable installation. Three of these requirements are:

1. The baseplate must provide sufficient rigidity to assure the assembly can be transported and installed, given reasonable care in handling, without damage. It must also be rigid enough when properly installed to resist operating loads.
2. The baseplate must provide a reasonably flat mounting surface for the pump and driver. Uneven surfaces will result in a soft-foot condition that may make alignment difficult, or impossible. Durco's experience indicates that a baseplate that has a *top surface* flatness of ±1/16 in (1.6 mm) across the diagonal corners of the baseplate provides such a mounting surface. Therefore, this is the tolerance to which we supply our standard baseplate. Some users may desire an even flatter surface which can facilitate installation and alignment. Durco will supply flatter baseplates upon request at extra cost. For example, mounting surface flatness of 0.002 in/ft (0.17 mm/m) is offered on our Type E "Ten Point" baseplate shown in Figure 7.
3. The baseplate must be designed to allow the user to final field align the pump and driver to within their own particular standards and to compensate for any pump or driver movement that occurred during handling. Normal industry practice is to achieve final alignment by moving the motor to match the pump. Durco's practice is to confirm in our shop that the pump assembly can be accurately aligned. Before shipment we verify that there is enough horizontal movement capability at the motor to obtain a "perfect" final alignment when the installer puts the baseplate assembly into its original, top leveled, unstressed condition.

INSTALLATION AND ALIGNMENT

Durco's Factory Preliminary Alignment Procedure

The purpose of our factory alignment is to ensure that our customers will have full utilization of the clearance in the motor holes for final job-site alignment. To achieve this, the factory alignment procedure specifies that the pump be aligned in the horizontal plane to the motor, with the motor foot bolts centered in the motor holes. This procedure ensures that there is sufficient clearance in the motor holes for the customer to field align the motor to the pump, to zero tolerance. This philosophy requires that the customer be able to place the base in the same condition as the factory. Thus the factory alignment will be done with the base sitting in an unrestrained condition on a flat and level surface. This standard also emphasizes the need to ensure the shaft spacing is adequate to accept the specified coupling spacer.

The factory alignment procedure is summarized below:

1. The baseplate is placed on a flat and level work bench in a free and unstressed position.
2. The baseplate is leveled as necessary. Leveling is accomplished by placing shims under the rails (or, feet) of the base at the appropriate anchor bolt hole locations. Levelness is checked in both the longitudinal and lateral directions.
3. The motor and appropriate motor mounting hardware is placed on the baseplate and the motor is checked for any planar soft-foot condition. If any is present it is eliminated by shimming.

4. The motor feet holes are centered around the motor mounting fasteners. This is done by using a centering nut as shown in Figure 9.

FIGURE 9

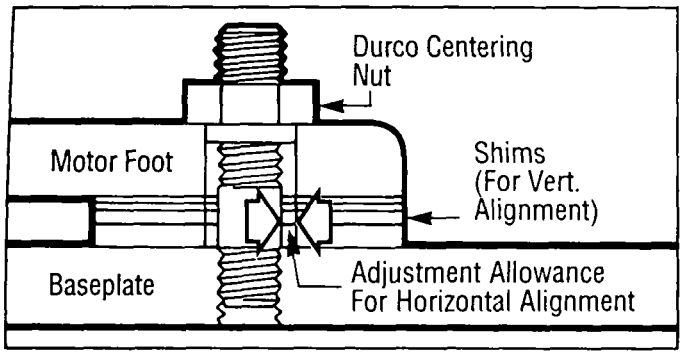

5. The motor is fastened in place by tightening the nuts on two diagonal motor mounting studs.
6. The pump is put onto the baseplate and leveled. The foot piece under the bearing housing is adjustable. It is used to level the pump, if necessary.
   MARK IIIA design
   If an adjustment is necessary, we add or delete shims (#109A) between the foot piece and the bearing housing.
   Old style MARK III design
   If an adjustment is necessary, the adjuster nut (#136B) is used to adjust the footpiece up or down.
7. The spacer coupling gap is verified.
8. The parallel and angular *vertical* alignment is made by shimming under the motor.
9. The motor feet holes are again centered around the motor mounting studs using the centering nut. At this point the centering nut is removed and replaced with a standard nut. This gives maximum potential mobility for the motor to be horizontally moved during final, field alignment. All four motor feet are tightened down.
10. The pump and motor shafts are then aligned *horizontally,* both parallel and angular, by *moving the pump* to the fixed motor. The pump feet are tightened down.
11. Both horizontal and vertical alignment are again final checked as is the coupling spacer gap.

Recommended Procedure for Baseplate Installation and Final Field Alignment

New Grouted Baseplates

1. The pump foundation should be located as close to the source of the fluid to be pumped as practical. There should be adequate space for workers to install, operate, and maintain the pump. The foundation should be sufficient to absorb any vibration and should provide a rigid support for the pump and motor. Refer to Figure 10. Note that foundation bolts are imbedded in the concrete inside a sleeve to allow some movement of the bolt.
2. Level the pump baseplate assembly. The proper surfaces to reference when leveling the pump are the pump suction and discharge flanges. Use a level on the discharge flange and shim under the baseplate. DO NOT stress the baseplate. Do not bolt the suction or discharge flanges of the pump to the piping until the baseplate foundation is completely installed. Check for levelness in both the longitudinal and lateral directions. Shims should be placed at all base anchor bolt locations, and in the middle of the base if the base is more than five feet long. Do not rely on the bottom of the baseplate to be flat.

FIGURE 10
Baseplate Foundation

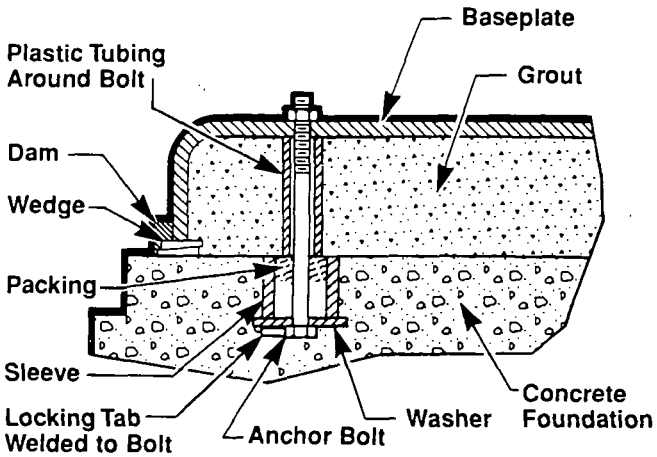

   Standard baseplate bottoms are not machined, and it is not likely that the field mounting surface is flat. Level flanges will replicate Duriron's practice during shop alignment and will therefore provide a common point of reference.
3. Tighten the anchor bolts. Make sure that the baseplate was fully shimmed near each anchor bolt before tightening. It is very easy to twist a baseplate by tightening an anchor bolt without fully shimming the base. If a baseplate is twisted in this manner it may be impossible to obtain final alignment.
4. Check initial alignment. As described above, pumps are given a preliminary alignment at the factory. This preliminary alignment is done in a way that ensures that, if the installer duplicates the factory conditions, there will be sufficient clearance between the motor hold down bolts and motor foot holes to move the motor into final alignment. If there has been no transit damage, and if the above steps where done properly, the pump and driver should

GROUTED BASEPLATE INSTALLATION PROCEDURES (Cont'd)

be within 0.015 in (0.38 mm) FIM parallel, and 0.0025 in/in (0.0025 mm/mm) FIM angular. If this is not the case first check to see if the driver mounting fasteners are centered in the driver feet holes. If not, there was likely movement in shipping. Preliminary alignment in the horizontal plane, within the above tolerances, must be achieved before the baseplate is grouted. Recenter the fasteners and perform a preliminary alignment to the above tolerances by shimming under the motor for vertical alignment, and by moving the *pump* for horizontal alignment.

5. Grout the baseplate. A non-shrinking grout should be used. Make sure that the grout fully fills the area under the baseplate. After the grout has cured, check for voids and repair them. If shims or wedges were placed under the baseplate, they should now be removed. If they were to be left in place, they could rust, swell, and cause distortion in the baseplate.
6. Run piping to the suction and discharge of the pump. There should be no piping loads transmitted to the pump after connection is made. Recheck the alignment to verify that there are no significant loads.
7. Perform final alignment. Check for soft-foot under the driver. An indicator placed on the coupling, reading in the vertical direction, should not indicate more than 0.002 in (0.05 mm) movement when any driver fastener is loosened. Align the driver first in the vertical direction by shimming underneath its feet. When satisfactory alignment is obtained the number of shims in the pack should be minimized. It is recommended that no more than five shims be used under any foot. Final horizontal alignment is made by moving the driver. Maximum pump reliability is obtained by having near perfect alignment. Durco recommends no more than 0.002 in (0.05 mm) parallel, and 0.0005 in/in (0.0005 mm/mm) angular misalignment.
8. Operate the pump for at least an hour, or until it reaches final operating temperature. Shut the pump down and recheck alignment while the pump is hot. Piping thermal expansion may change the alignment. Realign pump as necessary.

Existing Grouted Baseplates

When a pump is being installed on an existing grouted baseplate, the procedure is somewhat different from the previous section "New Grouted Baseplates."

1. Mount the pump on the existing baseplate.
2. Level the pump by putting a level on the discharge flange. If not level, adjust the footpiece as follows:
   MARK IIIA design
   Add or delete shims (#109A) between the footpiece and the bearing housing.
   Old style MARK III design
   Use the adjuster nut (#136B) to adjust the footpiece up or down.
3. Check initial alignment. (Step 4 above)
4. Run piping to the suction and discharge flanges of the pump. (Step 6 above)
5. Perform final alignment. (Step 7 above)
6. Recheck alignment after pump is hot. (Step 8 above)

Stilt Mounted Baseplates

Refer to Appendix B for instructions for assembling stilt or spring mounted baseplates. The low vibration levels of Durco pumps allows the use of these baseplates – provided they are of a rigid design. The baseplate is set on a flat surface with no tie down bolts or other means of anchoring it to the floor. The procedure for motor alignment on stilt or spring mounted baseplates is similar to grouted baseplates. The difference is primarily in the way the baseplate is levelled.

1. Level the baseplate by using the stilt adjusters. (Shims are not needed as with grouted baseplates.) After the base is level, it is locked in place by locking the stilt adjusters.
2. Next the initial pump alignment must be checked. The vertical height adjustment provided by the stilts allows the possibility of slightly twisting the baseplate. If there has been no transit damage or twisting of the baseplate during stilt height adjustment, the pump and driver should be within 0.015 in (0.38 mm) parallel, and 0.0025 in/in (0.0025 mm/mm) angular alignment. If this is not the case, check to see if the driver mounting fasteners are centered in the driver feet holes.
3. If the fasteners are not centered there was likely shipping damage. Recenter the fasteners and perform a preliminary alignment to the above tolerances by shimming under the motor for vertical alignment, and by moving the *pump* for horizontal alignment.
4. If the fasteners are centered, then the baseplate may be twisted. Slightly adjust (one turn of the adjusting nut) the stilts at the driver end of the baseplate and check for alignment to the above tolerances. Repeat as necessary while maintaining a level condition as measured from the pump discharge flange. Lock the stilt adjusters.

The remaining steps are as listed for new grouted baseplates (Steps 6, 7 and 8).

PIPING CONNECTION – SUCTION/DISCHARGE

All piping must be independently supported, accurately aligned and preferably connected to the pump by a short length of flexible piping. The pump should not have to

support the weight of the pipe or compensate for misalignment. It should be possible to install suction and discharge bolts through mating flanges without pulling or prying either of the flanges. All piping must be tight. Pumps may air-bind if air is allowed to leak into the piping.

⚠ WARNING

Piping Forces: Take care during installation and operation to minimize pipe forces and/or moments on the pump casing. Forces and moments must be kept within the limits given in Appendix I.

Many bellows type joints have an effective area larger than the pipe area. The force resulting from application of system pressure over the effective area when combined with other live and dead loads must not exceed the values given in Appendix I. If the combined forces and moments are greater than the values from Appendix I, a piping system as shown in Figure 11 must be used.

FIGURE 11
MARK III Pump Installation Using Expansion Joints

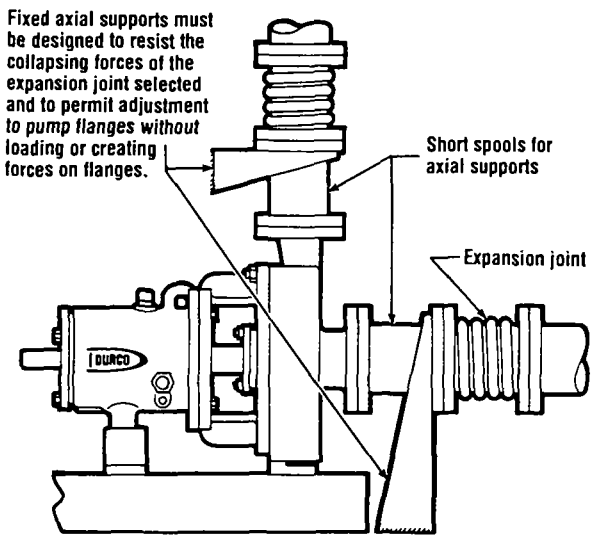

Suction Piping

To avoid NPSH and suction problems, suction pipe sizes must be at least as large as the pump suction connection. **Never** use pipe or fittings on the suction that are smaller in diameter than the pump suction size.

Figure 12 illustrates the ideal piping configuration with a minimum of 10 pipe diameters between the source and the pump suction. In most cases, horizontal reducers should be eccentric and mounted with the flat side up as shown in Figure 13 with a maximum of one pipe size reduction. Never mount eccentric reducers with the flat side down. Horizontally mounted concentric reducers should not be used if there is any possibility of entrained air in the process fluid. Vertically mounted concentric reducers are acceptable. In applications where the fluid is completely deaerated and free of any vapor or suspended solids, concentric reducers are preferable to eccentric reducers.

FIGURE 12
Good Piping Practice

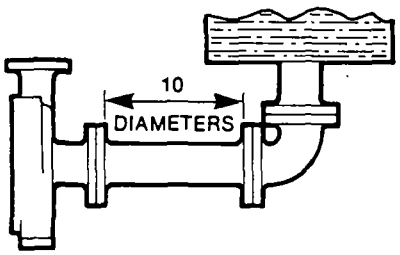

FIGURE 13
Good Piping Practice

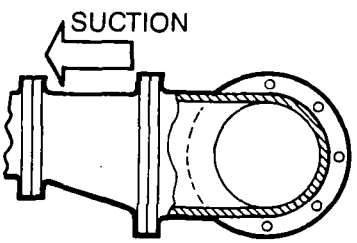

Avoid the use of throttling valves and strainers in the suction line. Start up strainers must be removed shortly after start up. When the pump is installed below the source of supply, a valve should be installed in the suction line to isolate the pump and to permit pump inspection and maintenance. However, never place a valve directly on the suction nozzle of the pump.

Refer to the Durco Pump Engineering Manual and the Centrifugal Pump IOM Section of the Hydraulic Institute Standards for additional recommendations on suction piping. (See Appendix J)

Suction pressure limits for MARK III pumps with reverse vane impellers are given in Figure 14. The curves show maximum allowable suction pressure at various specific gravities. Note that Class 300 flanges may be necessary. Note also that for front vane open impellers the suction pressure is limited only by the pressure/ temperature curves shown in Figure 1.

⚠WARNING

The pressure temperature ratings shown in Figure 1 must not be exceeded. Suction pressure is limited only by the pressure temperature ratings, for pump sizes 10 x 8-14, 8 x 6-16A, 10 x 8-16 and 10 x 8-16H up through 2.0 specific gravity. Consult factory for specific gravity greater than 2.0.

Discharge Piping

Install a valve in the discharge line. This valve is required for regulating flow and/or to isolate the pump for inspection and maintenance.

⚠WARNING

When fluid velocity in the pipe is high, for example, 10 f/s (3 m/s) or higher, a rapidly closing discharge valve can cause a damaging pressure surge. A dampening arrangement should be provided in the piping.

Pump and Shaft Alignment Check

After connecting piping, rotate the pump drive shaft clockwise (view from motor end) by hand several complete revolutions to be sure there is no binding and that all parts are free. Recheck shaft alignment. If piping caused unit to be out of alignment, correct piping to relieve strain on the pump.

FIGURE 14
Suction pressure limits

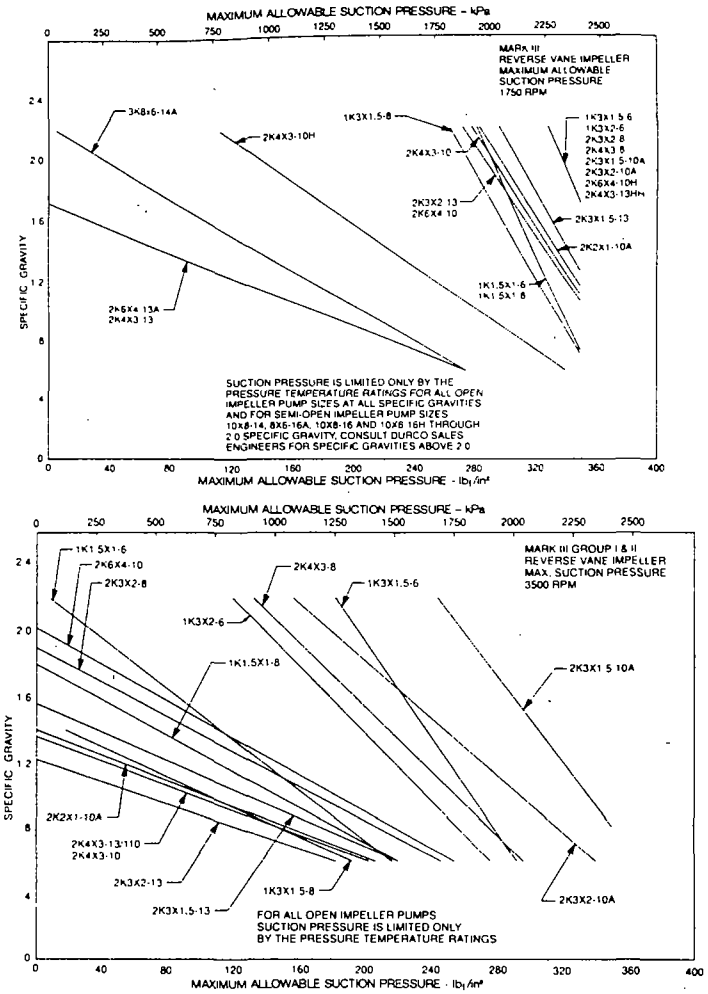

PIPING CONNECTION – SEAL/PACKING SUPPORT SYSTEM

⚠WARNING

If the pump has a seal support system, it is mandatory that this system be fully installed and operational before the pump is started.

If packing is used:

Packing Lubrication – Water, when compatible with the pumpage, should be introduced into Tap V (Figure 15) at pressure 10 to 15 lb_f/in^2 (69 to 103 kPa) above the stuffing box pressure. The gland should be adjusted to give a flow rate of 20 to 30 drops per minute for clean fluid. For abrasive applications, the regulated flow rate should be 1-2 gpm (0.06-0.13 l/s).

FIGURE 15

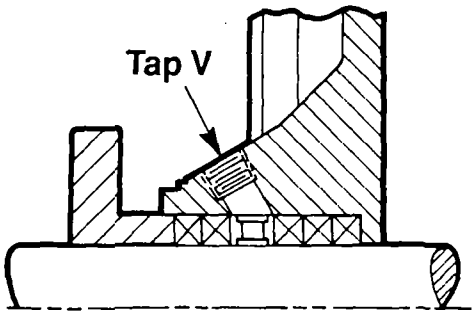

Grease lubrication, when compatible with the pumpage, may be used. Again, introduced into Tap V.

In non-abrasive applications the pumpage itself may be sufficient to lubricate the packing without need for external lines. Tap V should be plugged.

Abrasive Packing Arrangement – The installation procedures are the same as the standard packing with some exceptions. A special lip seal is installed first, followed by two seal cage assemblies, then two of the packing rings provided (Figure 16). A flush line from a clean external source should be connected via Tap V, in the top of the stuffing box.

FIGURE 16

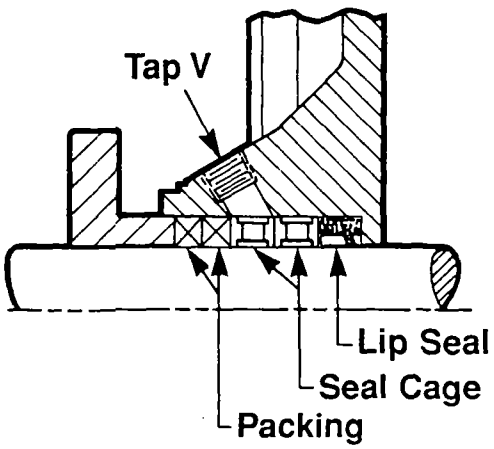

PIPING CONNECTION – BEARING HOUSING COOLING SYSTEM

Make connections as shown below. Liquid at less than 90°F (32°C) should be supplied at a regulated flow rate of at least 1 gpm (0.06 l/s).

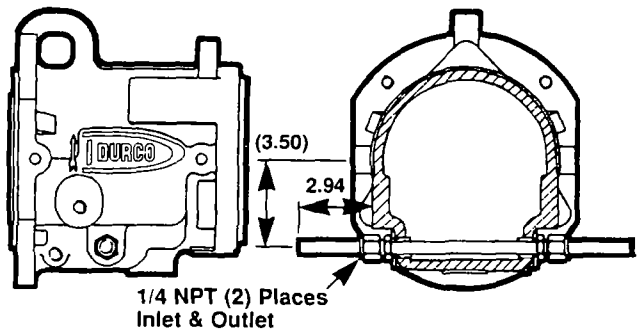

PIPING CONNECTION – SUPPORT LEG COOLING FOR CENTERLINE MOUNTING OPTION

If the casing is centerline mounted, and the process temperature is over 350°F (178°C), then the casing support legs may need to be cooled. Cool water (less than 90°F (32°C)) should be run through the legs at a flow rate of at least 1 gpm (0.06 l/s) as shown below.

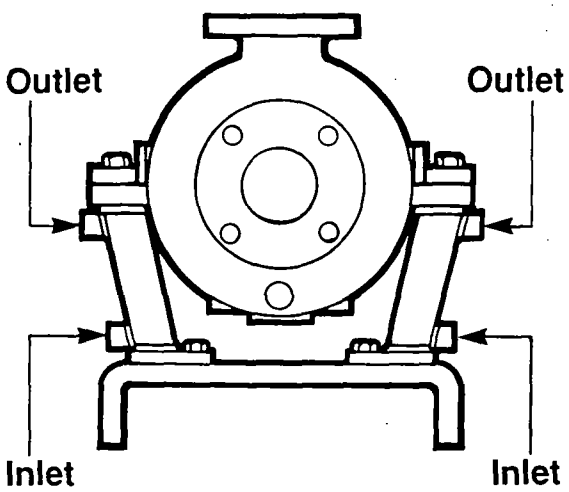

PIPING CONNECTION – HEATING/COOLING FLUID FOR JACKETED COVER/CASING

The piping connections for jacketed covers and casings are shown below. The flow rate of the cooling water (less than 90°F (32°C)) should be at least 2 gpm (0.13 l/s).

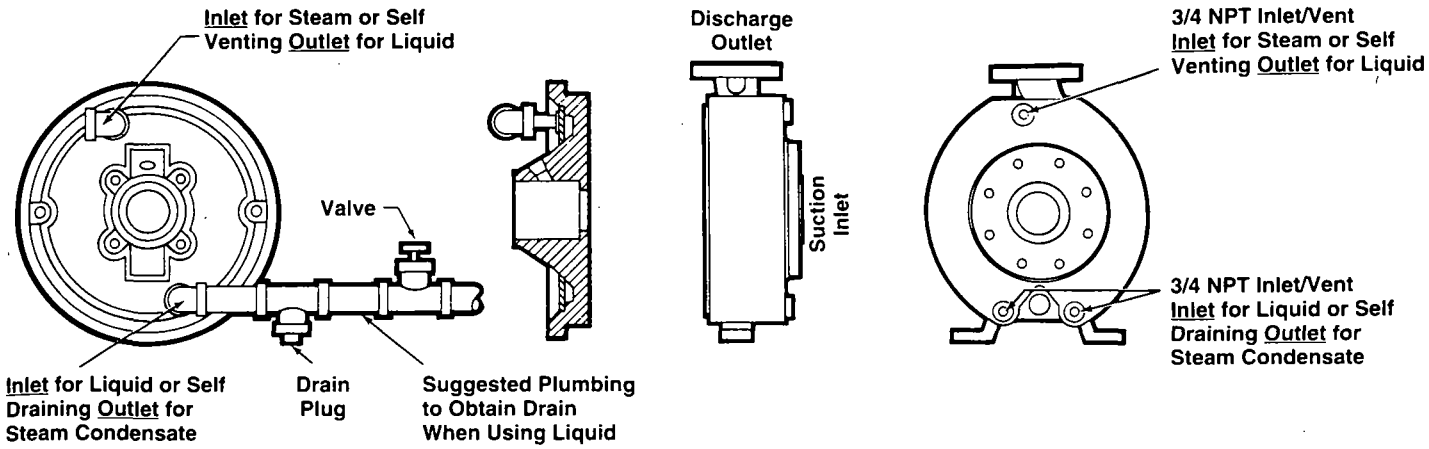

PIPING CONNECTION – OIL MIST LUBRICATION SYSTEM

The piping connections for an oil mist lubrication system are shown below.

OIL MIST READY HOUSING WET SUMP

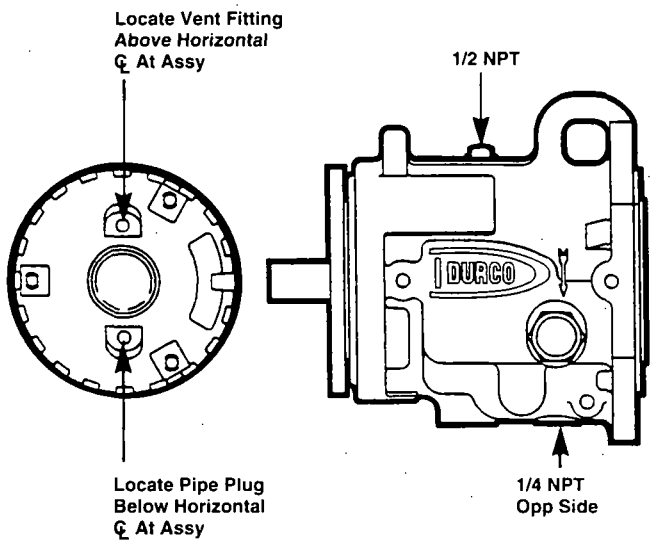

OIL MIST READY HOUSING DRY SUMP

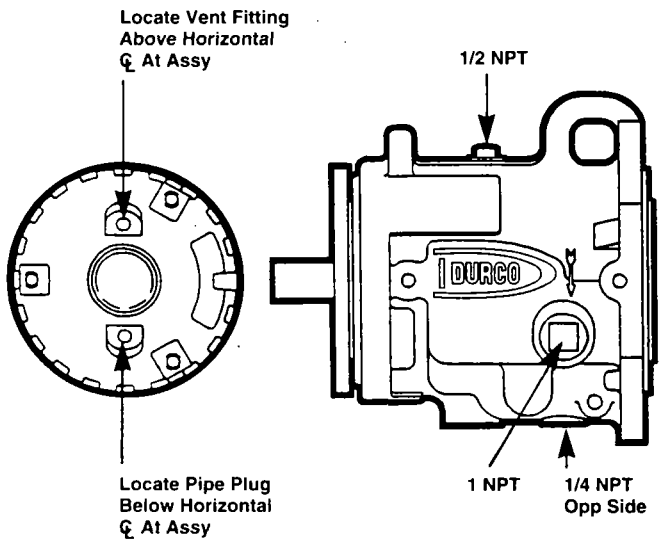

COUPLING

⚠CAUTION

A direction arrow is cast on the front of the Casing (See Figure 17) and on the Bearing Housing. Make sure the motor rotates in the same direction before coupling the motor to the Pump. *It is absolutely essential that the rotation of the motor be checked before connecting the shaft coupling. Incorrect rotation of the pump, for even a short time, can dislodge the impeller which may cause serious damage to the pump. All Durco pumps turn clockwise as viewed from the motor end or, conversely, counterclockwise when viewed from the suction end as shown in Figure 17.*

FIGURE 17

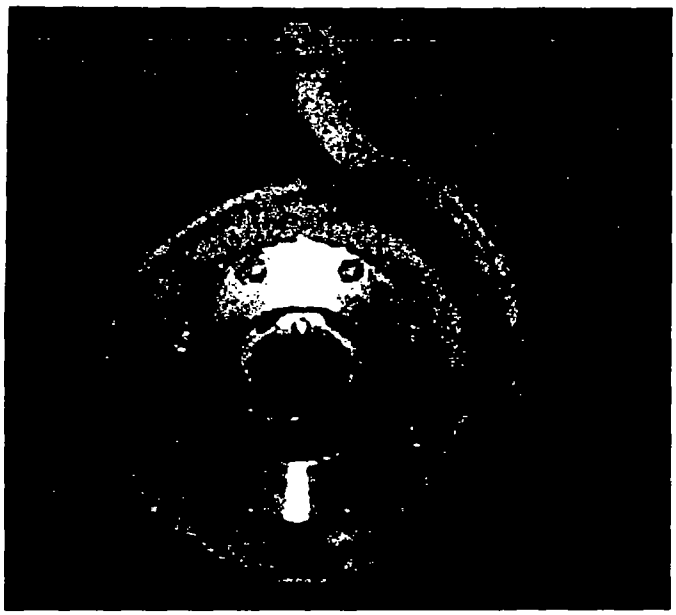

The coupling (Figure 18) should be installed as advised by the coupling manufacturer. Pumps are shipped without the spacer installed. If the spacer has been installed to facilitate alignment, then it must be removed prior to checking rotation.

FIGURE 18 **Typical Spacer Coupling**

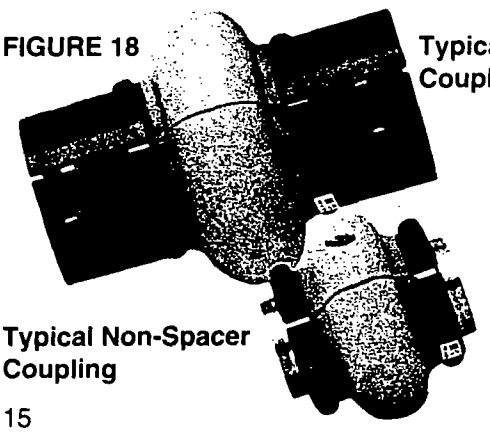

Typical Non-Spacer Coupling

Coupling Guard Maintenance

⚠WARNING

*Power must **never** be applied to the driver when the coupling guard is not installed.*

The Durco coupling guard is of the "clam shell" design and is shown in Figure 19. It is hinged at the top. It can be removed by loosening one of the foot bolts and sliding the support leg out from under the cap screw (note that the foot is slotted). The leg can then be rotated upward and half of the guard can be disengaged (unhinged) from the other. Note that only one side of the guard needs to be removed. To reassemble simply reverse the above procedure.

The Durco coupling guard shown in Figure 19 conforms to the U.S.A. standard ASME B15.1, "Safety Standard for Mechanical Power Transmission Apparatus." Durco manufacturing facilities worldwide conform to local coupling guard regulations.

FIGURE 19

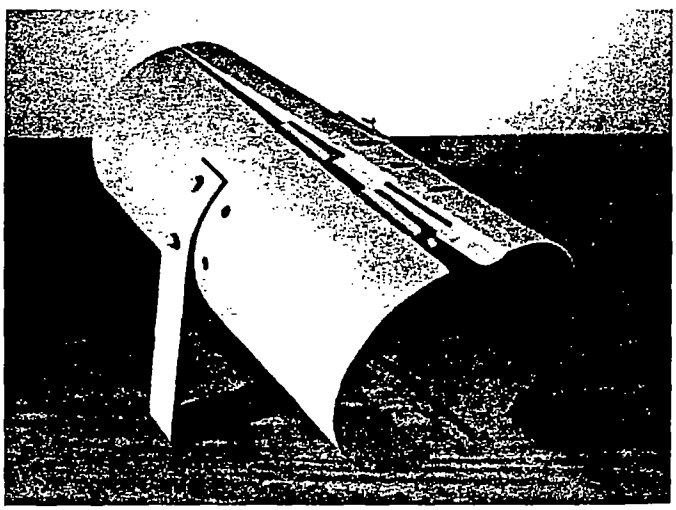

C-flange motor adapter – special considerations

If your pump is equipped with a C-flange motor adapter, refer to Appendix A for guidelines on installation, operation, and maintenance.

4.3 OPERATION

ROTATION CHECK

⚠CAUTION

It is absolutely essential that the rotation of the motor be checked before connecting the shaft coupling. Incorrect rotation of the pump, for even a short time, can dislodge and damage the impeller, casing, shaft and shaft seal. All Durco pumps turn clockwise as viewed from the motor end. A direction arrow is cast on the front of the casing as shown in Figure 17. Make sure the motor rotates in the same direction.

PRE START-UP CHECKS

Prior to starting the pump it is essential that the following checks are made. These checks are all described in detail in the Maintenance Section of this booklet.

- Pump and Motor properly secured to the baseplate
- All fasteners tightened to the correct torques
- Coupling guard in place and not rubbing
- Rotation check, see above, section 4.3
  THIS IS ABSOLUTELY ESSENTIAL.
- Impeller clearance setting
- Shaft seal properly installed
- Seal support system operational
- Bearing lubrication
- Bearing housing cooling system operational
- Support leg cooling for centerline mounting option operational
- Heating/cooling for jacketed casing/cover operational
- Pump instrumentation is operational
- Pump is primed
- Rotation of shaft by hand

As a final step in preparation for operation, it is important to rotate the shaft by hand to be certain that all rotating parts move freely, and that there are no foreign objects in the pump casing.

4.4 START-UP CONSIDERATIONS

ENSURING PROPER $NPSH_A$

Net Positive Suction Head – Available ($NPSH_A$) is the measure of the energy in a liquid above the vapor pressure. It is used to determine the likelihood that a fluid will vaporize in the pump. It is critical because a centrifugal pump is designed to pump a liquid, not a vapor. Vaporization in a pump will result in damage to the pump, deterioration of the Total Differential Head (TDH), and possibly a complete stopping of pumping.

Net Positive Suction Head – Required ($NPSH_R$) is the decrease of fluid energy between the inlet of the pump, and the point of lowest pressure in the pump. This decrease occurs because of friction losses and fluid accelerations in the inlet region of the pump, and particularly accelerations as the fluid enters the impeller vanes. The value for $NPSH_R$ for the specific pump you have purchased is given in the pump data sheet, and on the pump performance curve.

For a pump to operate properly the $NPSH_A$ must be greater than the $NPSH_R$. Good practice dictates that this margin should be at least 5 ft (1.5 m) or 20%, whichever is greater.

⚠ CAUTION

Ensuring that $NPSH_A$ is larger than $NPSH_R$ by the suggested margin will greatly enhance pump performance and reliability. It will also reduce the likelihood of cavitation, which can severely damage the pump.

MINIMUM FLOW

Minimum continuous stable flow is the lowest flow at which the pump can operate and still conform to the bearing life, shaft deflection and bearing housing vibration limits of ANSI/ASME B73.1M-1991. Pumps may be operated at lower flows, but it must be recognized that the pump may not conform to one or more of these limits. For example, vibration may exceed the limit set by the ASME standard. The size of the pump, the energy absorbed, and the liquid pumped are some of the considerations in determining the minimum flow.

Typically, limitations of 10% of the capacity at the best efficiency point (BEP) should be specified as the minimum flow. However, Durco has determined that several pumps must be limited to higher minimum flows to provide optimum service. The following are the recommended minimum flows for these specific pumps:

FIGURE 20

	60 Hz		50 Hz	
Pump Size	RPM	Minimum flow (% of BEP)	RPM	Minimum flow (% of BEP)
1K3X2-6	3500	25%	2900	21%
2K3X2-8	3500	25%	2900	21%
2K4X3-8	3500	25%	2900	21%
2K3X2-10	3500	33%	2900	28%
2K4X3-10	3500	33%	2900	28%
2K6X4-10	3500	50%	2900	42%
2K3X2-13	3500	50%	2900	42%
2K4X3-13	3500	50%	2900	42%
2K6X4-13	1750	50%	1450	42%
ALL GROUP 3 PUMPS*	1750	50%	1450	42%
ALL OTHER SIZES	ANY	10%	ANY	10%

*In some cases, the 3K6X4-16 can be used at lower than 50% of BEP, by making a modification. Contact Dayton Engineering if you wish to use this pump at a lower flow.

Note: The Lo-Flo pump is not covered by this table. See Section 8.0 for a discussion of the Lo-Flo pump.

All MARK III pumps also have a "Minimum Thermal Flow." This is defined as the minimum flow that will not cause an excessive temperature rise. Minimum Thermal Flow is application dependent.

⚠ WARNING

Do not operate the pump at below Minimum Thermal Flow, as this could cause an excessive temperature rise. Contact your Durco Sales Engineer for determination of Minimum Thermal flow.

STARTING THE PUMP AND ADJUSTING FLOW

1. Open the suction valve to full open position. It is very important to leave the suction valve open while the pump is operating. Any throttling or adjusting of flow must be done through the discharge valve. Partially closing the suction valve can create serious NPSH and pump performance problems.

⚠ DANGER

Never operate pump with both the suction and discharge valves closed. This could cause an explosion.

2. A standard centrifugal pump will not move liquid unless the pump is primed. A pump is said to be "primed" when the casing and the suction piping are completely filled with liquid. Open discharge valve a

slight amount. This will allow any entrapped air to escape and will normally allow the pump to prime, if the suction source is above the pump. (See Section 6.0 for special information regarding Durco's Unitized Self Priming pumps.) When a condition exists where the suction pressure may drop below the pump's capability, it is advisable to add a low pressure control device to shut the pump down when the pressure drops below a predetermined minimum.

3. All cooling, heating, and flush lines must be started and regulated.
4. Start the driver (typically, the electric motor).
5. Slowly open the discharge valve until the desired flow is reached, keeping in mind the minimum flow restrictions listed above.

⚠ DANGER

It is important that the discharge valve be opened within a short interval after starting the driver. Failure to do this could cause a dangerous build up of heat, and possibly an explosion.

6. *Reduced capacity*
   Avoid running a centrifugal pump at drastically reduced capacities or with discharge valve closed for extended periods of time. This can cause severe temperature rise and the liquid in the pump may reach its boiling point. If this occurs, the mechanical seal will be exposed to vapor, with no lubrication, and may score or seize to the stationary parts. Continued running under these conditions when the suction valve is also closed, can create an explosive condition due to the confined vapor at high pressure and temperature.

   Thermostats may be used to safeguard against over heating by shutting down the pump at a predetermined temperature.

   Safeguards should also be taken against possible operation with a closed discharge valve, such as installing a bypass back to the suction source. The size of the bypass line and the required bypass flow rate is a function of the input horsepower and the allowable temperature rise.

7. *Reduced Head*
   Note that when discharge head drops, the pump's flow rate usually increases rapidly. Check motor for temperature rise as this may cause overload. If overloading occurs, throttle the discharge.

8. *Surging Condition*
   A rapidly closing discharge valve can cause a damaging pressure surge. A dampening arrangement should be provided in the piping.

OPERATION IN SUB-FREEZING CONDITIONS

When using the pump in sub-freezing conditions where the pump is periodically idle, the pump should be properly drained or protected with thermal devices which will keep the liquid in the pump from freezing.

SHUTDOWN CONSIDERATIONS

When the pump is being shutdown, the procedure should be the reverse of the start-up procedure. First, slowly close the discharge valve, shutdown the driver, then close the suction valve. Remember, closing the suction valve while the pump is running is a safety hazard and could seriously damage the pump and other equipment.

TROUBLESHOOTING

The following is a guide to troubleshooting problems with Durco pumps. Common problems are analyzed and solutions are offered. Obviously, it is impossible to cover every possible scenario. If you are having a problem that is not covered by one of the examples, then refer to one of the books listed in the "Sources of Additional Information" section. You may also want to contact your local Durco Sales Engineer or Distributor/Representative for assistance.

PROBLEM	POSSIBLE CAUSE	RECOMMENDED REMEDY
Problem #1 Pump not reaching design flow rate	1.1 Insufficient NPSH. (Noise may not be present.)	Recalculate NPSH available. It must be greater than the NPSH required by pump at desired flow. If not, redesign suction piping, holding number of elbows and number of planes to a minimum to avoid adverse flow rotation as it approaches the impeller.
	1.2 System head greater than anticipated.	Reduce system head by increasing pipe size and/or reducing number of fittings. Increase impeller diameter. NOTE: Increasing impeller diameter may require use of a larger motor.

PROBLEM	POSSIBLE CAUSE	RECOMMENDED REMEDY
Cont: **Problem #1.0** Pump not reaching design flow rate.	1.3 Entrained air. Air leak from atmosphere on suction side.	1. Check suction line gaskets and threads for tightness. 2. If vortex formation is observed in suction tank, install vortex breaker. 3. Check for minimum submergence.
	1.4 Entrained gas from process.	Process generated gases may require larger pumps.
	1.5 Speed too low.	Check motor speed against design speed.
	1.6 Direction of rotation wrong.	After confirming wrong rotation, reverse any two of three leads on a three phase motor. The pump should be disassembled and inspected before it is restarted.
	1.7 Impeller too small.	Replace with proper diameter impeller. NOTE; Increasing impeller diameter may require use of a larger motor.
	1.8 Impeller clearance too large.	Reset impeller clearance.
	1.9 Plugged impeller, suction line or casing which may be due to a product or large solids.	1. Reduce length of fiber when possible. 2. Reduce solids in the process fluid when possible. 3. Consider larger pump.
	1.10 Wet end parts (casing cover, impeller) worn, corroded or missing.	Replace part or parts.
Problem #2.0 Pump not reaching design head (TDH).	2.1 Refer to possible causes under Problem #1.0.	Refer to remedies listed under Problem #1.0 and #3.0.
Problem #3.0 No discharge or flow with pump running.	3.1 Not properly primed.	Repeat priming operation, recheck instructions. If pump has run dry, disassemble and inspect the pump before operation.
	3.2 Direction of rotation wrong.	After confirming wrong rotation, reverse any two of three leads on a three phase motor. The pump should be disassembled and inspected before operation.
	3.3 Entrained air. Air leak from atmosphere on suction side.	Refer to recommended remedy under Problem #1.0, Item #1.3.
	3.4 Plugged impeller, suction line or casing which may be due to a fibrous product or large solids.	Refer to recommended remedy under Problem #1.0, Item #1.9.
	3.5 Damaged pump shaft, impeller.	Replace damaged parts.
Problem #4.0 Pump operates for short period, then loses prime.	4.1 Insufficient NPSH.	Refer to recommended remedy under Problem #1.0, Item #1.1.
	4.2 Entrained air. Air leak from atmosphere on suction side.	Refer to recommended remedy under Problem #1.0, Item #1.3.

PROBLEM	POSSIBLE CAUSE	RECOMMENDED REMEDY
Problem #5.0 Excessive noise from wet end.	5.1 Cavitation - insufficient NPSH available.	Refer to recommended remedy under Problem #1.0, Item #1.1.
	5.2 Abnormal fluid rotation due to complex suction piping.	Redesign suction piping, holder number of elbows and number of planes to a minimum to avoid adverse fluid rotation as it approaches the impeller.
	5.3 Impeller rubbing.	1. Check and reset impeller clearance. 2. Check outboard bearing assembly for axial end play.
Problem #6.0 Excessive noise from power end.	6.1 Bearing contamination appearing on the raceways as scoring, pitting, scratching, or rusting caused by adverse environment and entrance of abrasive contaminants from atmosphere.	1. Work with clean tools in clean surroundings. 2. Remove all outside dirt from housing before exposing bearings. 3. Handle with clean dry hands. 4. Treat a used bearing as carefully as a new one. 5. Use clean solvent and flushing oil. 6. Protect disassembled bearing from dirt and moisture. 7. Keep bearings wrapped in paper or clean cloth while not in use. 8. Clean inside of housing before replacing bearings. 9. Check oil seals and replace as required. 10. Check all plugs and tapped openings to make sure that they are tight.
	6.2 Brinelling of bearing identified by indentation on the ball races, usually caused by incorrectly applied forces in assembling the bearing or by shock loading such as hitting the bearing or drive shaft with a hammer.	When mounting the bearing on the drive shaft use a proper size ring and apply the pressure against the inner ring only. Be sure when mounting a bearing to apply the mounting pressure slowly and evenly.
	6.3 False brinelling of bearing identified again by either axial or circumferential indentations usually caused by vibration of the balls between the races in a stationary bearing.	1. Correct the source of vibration. 2. Where bearings are oil lubricated and employed in units that may be out of service for extended periods, the drive shaft should be turned over periodically to relubricate all bearing surfaces at intervals of one-to-three months.
	6.4 Thrust overload on bearing identified by flaking ball path on one side of the outer race or in the case of maximum capacity bearings, may appear as a spalling of the races in the vicinity of the loading slot. These thrust failures are caused by improper mounting of the bearing or excessive thrust loads.	1. Follow correct mounting procedures for bearings.
	6.5 Misalignment identified by fracture of ball retainer or a wide ball path on the inner race and a narrower cocked ball path on the outer race. Misalignment is caused by poor mounting practices or defective drive shaft. For example, bearing not square with the centerline or possibly a bent shaft due to improper handling.	Handle parts carefully and follow recommended mounting procedures. Check all parts for proper fit and alignment.

PROBLEM	POSSIBLE CAUSE	RECOMMENDED REMEDY
Cont.: **Problem #6.0** Excessive noise from power end.	6.6 Bearing damaged by electric arcing identified as electro-etching of both inner and outer ring as a pitting or cratering. Electrical arcing is caused by a static electrical charge eminating from belt drives, electrical leakage or short circuiting.	1. Where current shunting through the bearing cannot be corrected, a shunt in the form of a slip ring assembly should be incorporated. 2. Check all wiring, insulation and rotor windings to be sure that they are sound and all connections are properly made. 3. Where pumps are belt driven, consider the elimination of static charges by proper grounding or consider belt material that is less generative.
	6.7 Bearing damage due to improper lubrication, identified by one or more of the following: 1. Abnormal bearing temperature rise. 2. A stiff cracked grease appearance. 3. A brown or bluish discoloration of the bearing races.	1. Be sure the lubricant is clean. 2. Be sure proper amount of lubricant is used. The constant level oiler supplied with Durco pumps will maintain the proper oil level if it is installed and operating properly. In the case of greased lubricated bearings, be sure that there is space adjacent to the bearing into which it can rid itself of excessive lubricant, otherwise the bearing may overheat and fail prematurely. 3. Be sure the proper grade of lubricant is used.

4.5 MAINTENANCE

PREVENTIVE MAINTENANCE

The following sections of this manual give instructions on how to perform a complete maintenance overhaul. However, it is also important to periodically repeat the "Pre start-up checks" listed on page 16. These checks will help extend pump life as well as the length of time between major overhauls.

NEED FOR MAINTENANCE RECORDS

A procedure for keeping accurate maintenance records is a critical part of any program to improve pump reliability. There are many variables that can contribute to pump failures. Often long term and repetitive problems can only be solved by analyzing these variables through pump maintenance records.

NEED FOR CLEANLINESS

One of the major causes of pump failure is the presence of contaminants in the bearing housing. This contamination can be in the form of moisture, dust, dirt and other solid particles such as metal chips. Contamination can also be harmful to the mechanical seal (especially the seal faces) as well as other parts of the pumps. For example, dirt in the impeller threads could cause the impeller to not be seated properly against the shaft. This, in turn, could cause a series of other problems. For these reasons, it is very important that proper cleanliness be maintained. Some guidelines are listed below.

After draining the oil from the bearing housing, periodically send it out for analysis. If it is contaminated, determine the cause and correct. The work area should be clean and free from dust, dirt, oil, grease, etc. Hands and gloves should be clean. Only clean towels, rags, and tools should be used. To simplify maintenance, it is recommended that the "Durco Tool Kit", shown in Figure 21, to used. This tool kit includes a handy impeller wrench, which simplifies installation and removal of the impeller. It also contains "nose cones" which protect shaft threads and O-rings during maintenance.

FIGURE 21
Durco Tool Kit

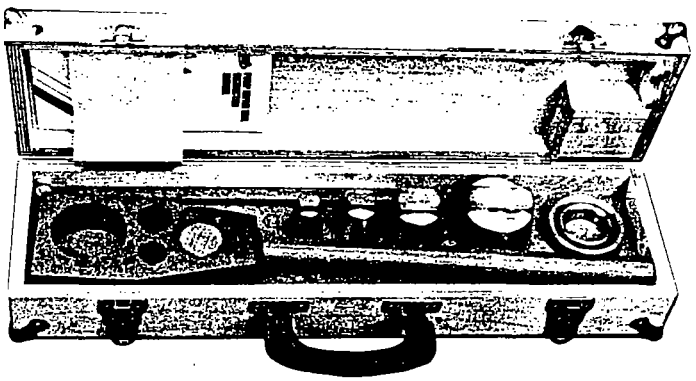

DISASSEMBLY

Refer to the parts list shown in Figure 52 for item number references used throughout this section.

1. Before performing any maintenance, disconnect the driver from its power supply and lock it off line.

⚠ DANGER

Lock out power to driver to prevent personal injury.

2. Close the discharge and suction valves, and drain all liquid from the pump.
3. Close all valves on auxiliary equipment and piping, then disconnect all auxiliary piping.
4. Decontaminate the pump as necessary.

⚠ DANGER

If Durco pumps contain dangerous chemicals, it is important to follow plant safety guidelines to avoid personal injury or death.

5. Remove the coupling guard. (See page 15 on Coupling Guards.)
6. Remove the spacer from the coupling.
7. Remove casing fasteners (#115A).
8. Remove the fasteners holding the bearing housing foot to the baseplate.
9. Move the power end, rear cover, and seal chamber assembly away from the casing. Discard the casing/cover gasket (#107).

⚠ CAUTION

The power end and rear cover assembly is heavy. It is important to follow plant safety guidelines when lifting it.

10. Transport the assembly to the maintenance shop.
11. Remove the coupling hub from the pump shaft (#105).
12. Using the shaft key (#130), mount the impeller wrench from the "Durco Tool Kit" (Figure 21) to the end of the shaft. With the wrench handle pointing to the left when viewed from the impeller end, grasp the impeller (#103) firmly with both hands (wear heavy gloves), by turning the impeller in the clockwise direction move the wrench handle to the 11:00 o'clock position and then spin the impeller quickly in a counterclockwise direction so that the wrench makes a sudden impact with a hard surface

on the bench. After several sharp raps, the impeller should be free. Unscrew the impeller and remove from the shaft. Discard the impeller gasket (#104).

⚠ DANGER

Do not apply heat to the impeller. If liquid is entrapped in the hub, an explosion could occur.

Refer to Appendix F for instructions on removing the seal, sleeve, and rear cover plate if pump is equipped with a SealSentry™ FMI seal chamber. This is the Durco seal chamber that does not have a separate gland. The gland is integral to the seal chamber.

13. Remove the seal or packing gland nuts (#111A).
14. Remove the two cap screws (#140) which attach the rear cover plate to the adapter. Carefully remove the rear cover plate (#106).

FIGURE 22

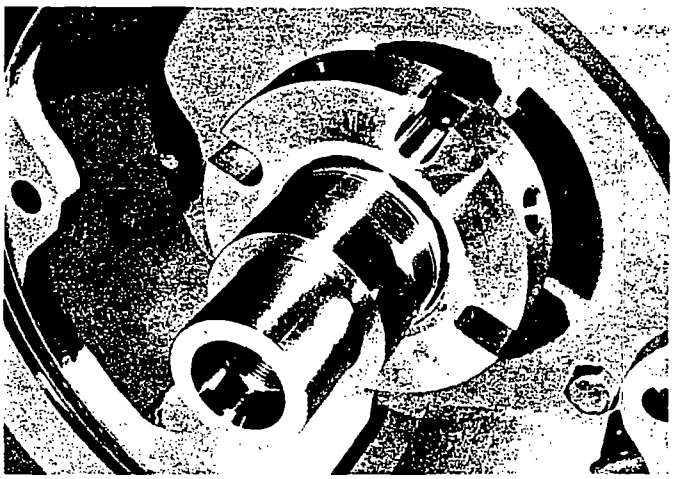

15. If a cartridge type mechanical seal (#153) is used (Figure 22), loosen the set screws which lock the unit to the shaft and remove the complete seal assembly. If you plan to reuse the seal, the spacing clips or tabs should be reinstalled prior to loosening the set screws. This will ensure that the proper seal compression is maintained.
16. If a component type inside mechanical seal (#153) is used, loosen the set screws on the rotating unit and remove it from the shaft, see Figure 23. Then pull the gland (#190) and stationary seat off the shaft. Remove the stationary seat from the gland. Discard all O-rings and gaskets.
17. If a component type outside mechanical seal is used, remove the gland and the stationary seat. Remove the stationary seat from the gland. Loosen the set screws in the rotating unit and remove it. Discard all O-rings and gaskets.

FIGURE 23

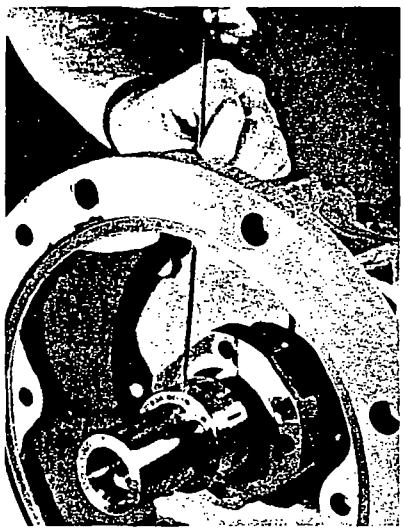

18. If packing (#113) is used, remove it and the seal cage (lantern ring)(#112). Remove the gland (#110).
19. If the pump has a hook type sleeve (#177) it can now be removed. Unit now appears as shown in Figure 24.

FIGURE 24

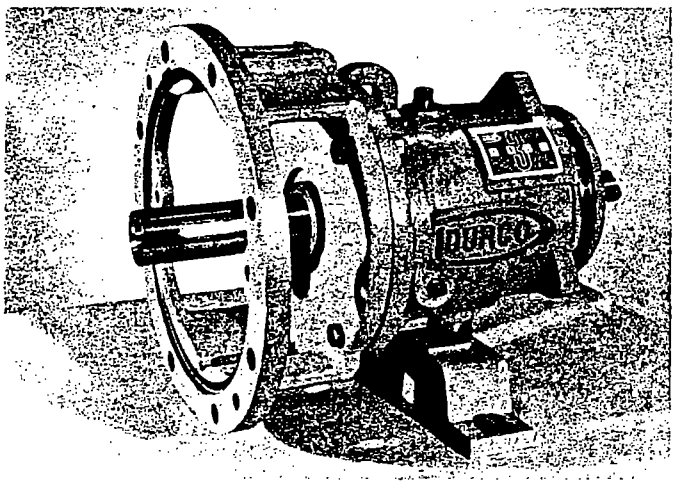

20. If the power end is oil lubricated, remove the drain plug (#134) and drain the oil from the bearing housing (#119).
21. If the pump has lip seals, a deflector (#114) will be present. Remove it.
22. Loosen the three set screws (#201A) on the bearing carrier (#201). The bearing carrier must be completely unscrewed from the bearing housing.
    Note: Do not pry against the shaft.
    MARK IIIA design
    The face of the bearing carrier has three square lugs that protrude from the surface. The bearing carrier is turned by using an open end wrench on one of the square lugs as shown in Figure 25.

FIGURE 25

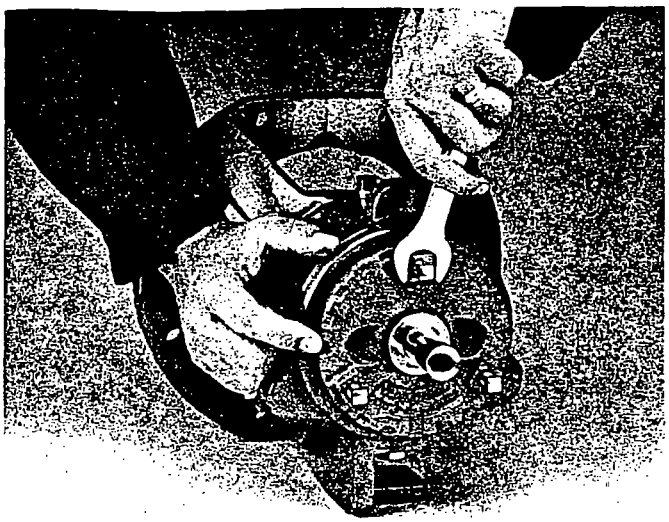

Old style MARK III design
On Group 1 and 2 pumps the bearing carrier is turned by using a strap wrench, with the strap located around the O.D. of the carrier face. On Group 3 pumps, the bearing carrier is turned by using a spanner wrench to engage the cogs on the O.D. of the bearing carrier.

23. Because the O-rings (#201B) will cause some resistance in removing the bearing carrier assembly from the housing, hold the bearing carrier flange firmly and with slight rotation, pull it out of the bearing housing. The bearing carrier assembly with the shaft and bearings should come free. This unit will appear as shown in Figure 25A. Further disassembly is not required unless the bearings are to be replaced.

FIGURE 25A

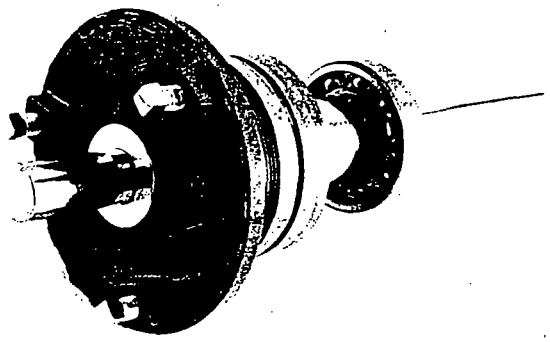

24. Remove the snap ring (#201C) (Figure 26) on Group 1 and 2 pumps, or the bearing retainer (#201D) on Group 3 pumps.

FIGURE 26

Note: Group 1 and 2 pumps equipped with duplex angular contact bearings use a bearing retainer (#201D) instead of the snap ring. Remove the carrier from the bearing.

25. The bearing locknut (#124) and lockwasher (#125) may now be removed from the shaft (#105). Discard the lockwasher.
26. An arbor or hydraulic press may be used to remove the bearings (#120 and #121) from the shaft. It is extremely important to apply even pressure to the inner bearing race only. Never apply pressure to the outer race as this exerts excess load on the balls and causes damage.

⚠CAUTION

Applying pressure to the outer race could permanently damage the bearings.

27. The MARK IIIA design has an optional oil slinger (#122) located between the bearings. If present, inspect it for damage or looseness. Remove if it needs to be replaced.
28. On Group 2 and 3 pumps, the bearing housing (#119) must be separated from the bearing housing adapter (#108).
    MARK IIIA design
    This is accomplished by removing the capscrews (#139) which thread into the bearing housing.
    Old style MARK III design
    This is accomplished by removing the hexnuts (#139A) and the capscrews (#139).
    The adapter O-ring (#131) should be discarded.
29. If lip seals (#118) and (#129) (Figure 27) are used, they should be removed from the bearing housing and adapter and discarded.

FIGURE 27

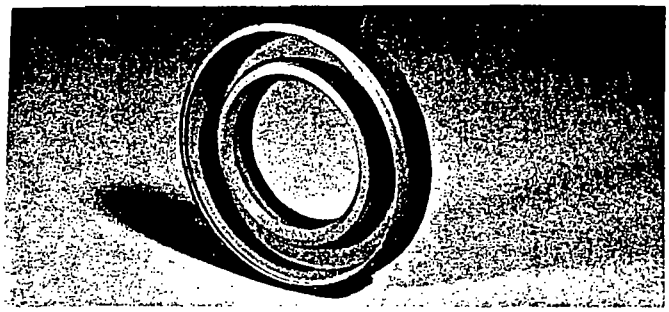

30. If bearing isolators are used, refer to Appendix G.
31. If magnetic seals are used, maintain the seals as specified by the manufacturer.
32. If present, the Trico oiler (#133) (Figure 28) should be removed from the bearing housing.

FIGURE 28

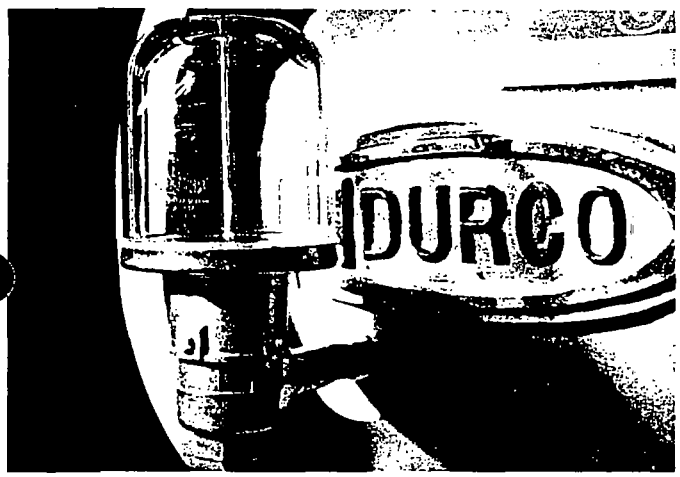

33. The sight gage (#200) (Figure 29) should be removed from the bearing housing. The MARK IIIA design will have the tag shown in Figure 30 attached to the sight gage. Remove this tag and save it to be re-installed later.

FIGURE 29

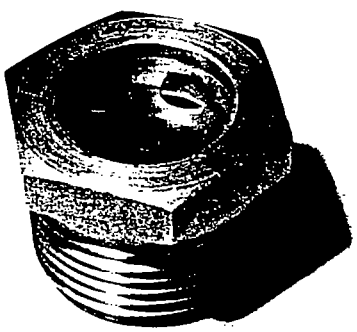

FIGURE 30

CLEANING/INSPECTION

All parts should now be thoroughly cleaned and inspected. New bearings, O-rings, gaskets, and lip seals should be used. Any parts that show wear or corrosion should be replaced with new genuine Durco parts.

⚠ WARNING

It is important that only non-flammable , non-contaminated cleaning fluids are used. These fluids must comply with plant safety and environmental guidelines.

CRITICAL MEASUREMENT AND TOLERANCES

To maximize reliability of pumps, it is important that certain parameters and dimensions are measured and maintained within specified tolerances. Please refer to Appendix C for a summary of these various physical parameters and the associated tolerances which are vital for maximizing pump reliability. It is very important that all parts be checked as specified in Appendix C. Any parts that do not conform to the specifications should be replaced with new Durco parts.

ASSEMBLY

Note: Refer to Figure 31 for all bolt torque information.

It is very important that all pipe threads be sealed properly. PTFE tape provides a very reliable seal over a wide range of fluids, but it has a serious shortcoming if not used properly. If, during application to the threads, the tape is wrapped over the end of the male thread, strings of the tape will be formed off when threaded into the female fitting. This string can then tear away and lodge in the piping system. If this occurs in the seal flush system, small orifices can become blocked effectively shutting off flow. For this reason we do not recommend the use of PTFE tape as a thread sealant.

Durco has investigated and tested alternate sealants and has identified two that provide an effective seal, have the same chemical resistance as the tape, and will not plug flush systems. These are La-co Slic-Tite and Bakerseal. Both products contain finely ground PTFE particles in an oil based carrier. They are supplied in a paste form which is brushed on the male pipe threads.

We recommend using one of these paste sealants.

FIGURE 31
Recommended Bolt Torques (US Customary Units)

Item	Description	Group 1 Non-lubricated	Group 2 Non-lubricated	Group 3 Non-lubricated
201E	Bearing retainer capscrews - standard bearings	N/A	N/A	5/16 in - 6 ft•lb$_f$
201E	Bearing retainer capscrews - duplex bearings	3/16 in - 2 ft•lb$_f$	3/16 in - 2 ft•lb$_f$	5/16 in - 6 ft•lb$_f$
139	Bearing housing/adapter capscrews and nuts	N/A	1/2 in - 27 ft•lb$_f$	5/8 in - 53 ft•lb$_f$
111	Mechanical seal gland studs/nuts, with gasket	3/8 in - 10 ft•lb$_f$	3/8 in - 10 ft•lb$_f$	1/2 in - 25 ft•lb$_f$
111	Mechanical seal gland studs/nuts, with O-ring	3/8 in - 40 ft•lb$_f$	3/8 in - 40 ft•lb$_f$	1/2 in - 97 ft•lb$_f$
115	Casing studs/nuts	1/2 in - 25 ft•lb$_f$	1/2 in - 25 ft•lb$_f$ 5/8 in - 45 ft•lb$_f$	3/4 in - 75 ft•lb$_f$
140	Capscrew cover/adapter (token bolts)	3/8 in - 11 ft•lb$_f$	3/8 in - 11 ft•lb$_f$	1/2 in - 27 ft•lb$_f$
201A	Bearing carrier set screws	3/8 in - 11 ft•lb$_f$	1/2 in - 27 ft•lb$_f$	1/2 in - 27 ft•lb$_f$
136	Capscrew foot	1/2 in - 27 ft•lb$_f$	3/4 in - 94 ft•lb$_f$	1 in - 228 ft•lb$_f$
195	Capscrews - repeller cover to cover	N/A	3/8 in - 10 ft•lb$_f$	1/2 in - 25 ft•lb$_f$

Note: For lubricated or PTFE-coated threads, use 75% of the values given.

Recommended Bolt Torques (Metric)

Item	Description	Group 1 Non-lubricated	Group 2 Non-lubricated	Group 3 Non-lubricated
201E	Bearing retainer capscrews - standard bearings	N/A	N/A	5/16 in - 8 N•m
201E	Bearing retainer capscrews - duplex bearings	3/16 in - 3 N•m	3/16 in - 3 N•m	5/16 in - 8 N•m
139	Bearing housing/adapter capscrews and nuts	N/A	1/2 in - 37 N•m	5/8 in - 72 N•m
111	Mechanical seal gland studs/nuts, with gasket	3/8 in - 13 N•m	3/8 in - 13 N•m	1/2 in - 34 N•m
111	Mechanical seal gland studs/nuts, with O-ring	3/8 in - 54 N•m	3/8 in - 54 N•m	1/2 in - 130 N•m
115	Casing studs/nuts	1/2 in - 34 N•m	1/2 in - 34 N•m 5/8 in - 61 N•m	3/4 in - 102 N•m
140	Capscrew cover/adapter (token bolts)	3/8 in - 15 N•m	3/8 in - 15 N•m	1/2 in - 37 N•m
201A	Bearing carrier set screws	3/8 in - 15 N•m	1/2 in - 37 N•m	1/2 in - 37 N•m
136	Capscrew foot	1/2 in - 37 N•m	3/4 in - 130 N•m	1 in - 300 N•m
195	Capscrews - repeller cover to cover	N/A	3/8 in - 13 N•m	1/2 in - 34 N•m

Note: For lubricated or PTFE-coated threads, use 75% of the values given.

POWER END ASSEMBLY

The MARK IIIA design has an optional oil slinger. If the slinger was removed during disassembly, install a new slinger (#122).

FIGURE 32

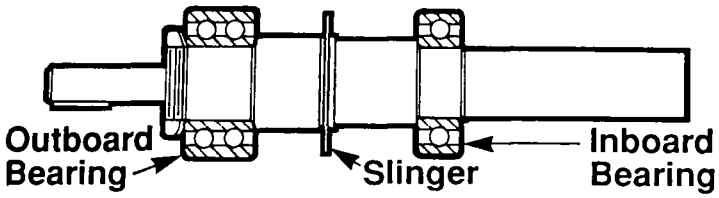

Bearing installation

Mounting of bearings on shafts must be done in a clean environment. Bearing and power end life can be drastically reduced if even very small foreign particles work their way into the bearings.

Bearings should be removed from their protective packaging only immediately before assembly to limit exposure to possible contamination. After removing the packaging they should only come in contact with clean hands, fixtures, tools and work surfaces.

The chart shown in Figure 33 gives the SKF part numbers for bearings in Durco MARK III pumps. Note that the term "inboard bearing" refers to the bearing nearest to the casing. "Outboard bearing" refers to the bearing nearest to the motor.

1. Install the inboard bearing (#120) on the shaft (#105).
   MARK IIIA design
   The inboard bearing must be positioned against the shoulder as shown in Figure 36.

   Old style MARK III design
   The correct position for the inboard bearing is given in Figure 34. It is important to note that on Group 1 and 2 pumps, the inboard bearing is not located against a shoulder. The position must be determined from the chart. On Group 3 shafts the inboard bearing is positioned against a shoulder.

   If the power end is equipped with single shield regreaseable bearings, the shields should be oriented as shown in Figure 32A.

FIGURE 32A

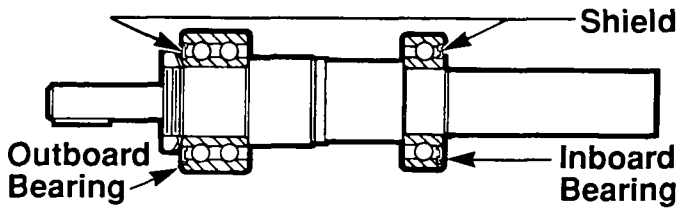

FIGURE 33
Durco MARK III Bearings

Group	Type of Bearings	Inboard Single Row, Deep Groove[5]	Outboard Double Row, Angular Contact, Deep Groove[5]	Optional Outboard Duplex Angular Contact[5]
1	Oil bath/mist – Open[1]	6207-C3	5306-A	7306-BECBY
	Regreasable – Single Shielded[2]	6207-ZC3	5306-AZ	NA[6]
	Greased for life – Double Shielded[3]	6207-2ZC3	5306-A2Z	NA[7]
	Sealed for life – Double Sealed[4]	6207-2RSIC3	5306-A2RS	NA[7]
2	Oil bath/mist – Open[1]	6310-C3	5310-AH	7310-BECBY
	Regreasable – Single Shielded[2]	6310-ZC3	5310-AZ	NA[6]
	Greased for life – Double Shielded[3]	6310-2ZC3	5310-A2Z	NA[7]
	Sealed for life – Double Sealed[4]	6310-2RSIC3	5310-A2RS	NA[7]
3	Oil bath/mist – Open[1]	6314-C3	5314-A	7314-BECBY
	Regreasable – Single Shielded[2]	6314-ZC3	5314-AZ	NA[6]
	Greased for life – Double Shielded[3]	6314-2ZC3	5314-A2Z	NA[7]
	Sealed for life – Double Sealed[4]	6314-2RSIC3	5314-A2RS	NA[7]

[1] These bearings are open on both sides. They are lubricated by oil bath or oil mist.

[2] These bearings are pre-greased by Durco. Replacement bearings will generally not be pre-greased, so grease must be applied by the user. They have a single shield, which is located on the side next to the grease buffer, or reservoir. The bearings draw grease from the reservoir as it is needed. The shield protects the bearing from getting too much grease, which would generate heat. The grease reservoir is initially filled with grease by Durco. Lubrication fittings are provided, to allow the customer to periodically replenish the grease, as recommended by the bearing and/or grease manufacturer.

[3] These bearings are shielded on both sides. They come pre-greased by the bearing manufacturer. The user does not need to regrease these bearings. The shields do not actually contact the bearing race, so no heat is generated.

[4] These bearings are sealed on both sides. They come pre-greased by the bearing manufacturer. The user does not need to regrease these bearings. The seals physically contact and rub against the bearing race, which generates heat. These bearings are not recommended at speeds above 1750 RPM.

[5] The codes shown are SKF codes. Inboard bearings have the C3, greater than "Normal" clearance, outboard bearings have the closer, "Normal" clearance. These clearances are recommended by SKF to maximize bearing life.

[6] Regreasable – Single Shielded bearings are not available in the duplex configuration; however, open oil bath-type bearings can be used for the regreasable configuration. These bearings must be pre-greased during assembly. Lubrication fittings are provided, to allow the user to periodically replenish the grease, as recommended by the bearing and/or grease manufacturer.

[7] Not available.

BEARING INSTALLATION
FOR POWER END ASSEMBLY (Cont'd)

Both bearings have a slight interference fit which requires that they be pressed on the shaft with an arbor or hydraulic press. A chart giving bearing fits is shown in Figure 35. Even force should be applied to the inner race only. Never press on the outer race, as the force will damage the balls and races. An alternate method of installing bearings is to heat the bearings to 200°F (93°C) in an oven or induction heater. Then place them quickly in position on the shaft.

⚠ CAUTION

Never heat the bearings above 230°F (110°C). To do so will likely cause the bearing fits to permanently change, leading to early failure.

FIGURE 34
Bearing Position – Old Style MARK III Design

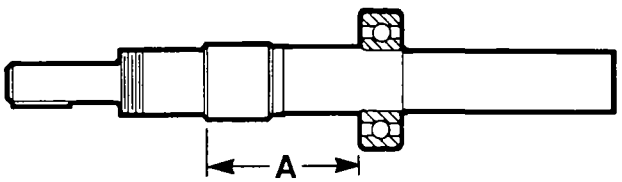

MARK III STANDARD SHAFT		MARK III DUPLEX BRG SHAFT	
GROUP	A	GROUP	A
1	$2^{11}/_{16}$ in (68 mm)	1	$2^{3}/_{8}$ in (61 mm)
2	$5^{15}/_{32}$ in (139 mm)	2	$5^{3}/_{32}$ in (129 mm)
3	*	3	*

*Inboard bearing located against shoulder

FIGURE 35
Bearing Fits (inches)*

		Group 1	Group 2	Group 3
OB brg/shaft	Bearing	1.1811/1.1807	1.9685/1.9680	2.7559/2.7553
	Shaft	1.1816/1.1812	1.9690/1.9686	2.7565/2.7560
	Fit	0.0009T/0.0001T	0.0010T/0.0001T	0.0012T/0.0001T
IB brg/shaft	Bearing	1.3780/1.3775	1.9685/1.9680	2.7559/2.7553
	Shaft	1.3785/1.3781	1.9690/1.9686	2.7565/2.7560
	Fit	0.0010T/0.0001T	0.0010T/0.0001T	0.0012T/0.0001T
OB brg/hsg	Bearing	2.8346/2.8341	4.3307/4.3301	5.9055/5.9047
	Housing	2.8346/2.8353	4.3310/4.3316	5.9056/5.9067
	Fit	0.0012L/0.0000L	0.0015L/0.0003L	0.0020L/0.0001L
IB brg/hsg	Bearing	2.8346/2.8341	4.3307/4.3301	5.9055/5.9047
	Housing	2.8346/2.8353	4.3310/4.3316	5.9058/5.9065
	Fit	0.0012L/0.0000L	0.0015L/0.0003L	0.0018L/0.0003L

*See Appendix C for metric system fits

2. Place the snap ring (#201C) or the bearing retainer (#201D) onto the outboard end of the shaft and slide down to the inboard bearing. Note the proper orientation of the bearing retainer or snap ring must be assured in this step. The flat side of the snap ring and the small side of the retainer must face away from the inboard bearing.

FIGURE 36

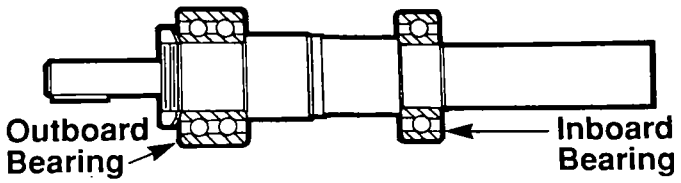

3. Using clean gloves, install the outboard bearing (#121) firmly against the shoulder as shown in Figure 36. If hot bearing mounting techniques are used, steps must be taken to ensure the outboard bearing is firmly positioned against the shaft shoulder. The outboard bearing, while still hot, is to be positioned against the shaft shoulder. After the bearing has cooled below 100°F (38°C) the bearing should be pressed against the shaft shoulder. An approximate press force needed to seat the bearing is listed in Figure 37. This value may be used if the press has load measuring capability.

⚠ CAUTION

It must be understood that fixtures and equipment used to press the bearing must be designed so no load is ever transmitted through the bearing balls. This would damage the bearing.

The locknut (#124) and lockwasher (#125) should be installed. The locknut should be torqued to the value shown in Figure 37. At this point the lockwasher tang must be bent into the locknut.

FIGURE 37

Pump	Press Force lb_f (N)	Locknut Torque ft·lb_f (N·m)
Group 1	1300 (5,780)	20 +5/-0 (27 +4/-0)
Group 2	2500 (11,100)	40 +5/-0 (54 +7/-0)
Group 3	4500 (20,000)	70 +5/-0 (95 +7/-0)

4. If the outboard bearing is cold pressed against the shaft shoulder, it should be secured with the lockwasher and locknut torqued with the "locknut torque" value listed in Figure 32. The lockwasher tang must then be bent into the locknut.
5. Duplex angular contact bearings must be mounted back-to-back with the wider thrust sides of the outer races in contact with each other as shown in Figure 33. Only bearings designed for universal matching, identified by the suffix "BECB", should be used. ***Note:*** A special shaft is required when using duplex angular contact bearings.

FIGURE 38

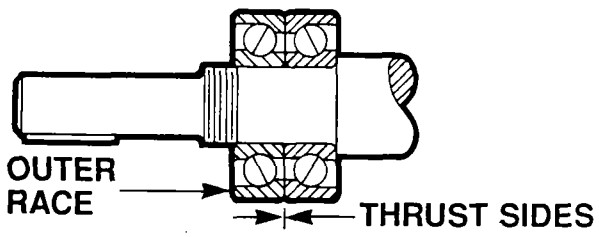

Lip seals

If lip seals were used (see Figure 28), install new lip seals in the bearing carrier (#201) and the housing (#119) (Group 1) or the adapter (#108) (Group 2 and 3). The lip seals (#118 and #129) are double lip style, the cavity between the lips should be 1/2 to 2/3 filled with grease.

Labyrinth seals

Refer to Appendix G.

Magnetic seals

Follow the installation instructions provided by the manufacturer.

Bearing carrier/power end assembly

6. Install new O-rings (#201B) onto the bearing carrier. Be sure to use the correct size O-rings. (The MARK III and MARK IIIA bearing carriers use different O-rings.) Slide the bearing carrier (#201) over the outboard bearing (#121).
7. On Group 1 and 2 pumps, if standard outboard bearings are used, slide the snap ring (#201C) in place with its flat side against the outboard bearing and snap it into its groove in the bearing carrier.

⚠ WARNING

Never compress the snap ring unless it is positioned around the shaft and between the bearings. In this configuration, it is contained therefore if it should slip off the compression tool it is unlikely to cause serious injury.

8. On Group 1 and 2 pumps, if duplex angular contact bearings are used, slide the bearing retainer (#201D) in place, install, and tighten the socket head capscrews (#201E). See Figure 31 for correct torque values.
9. On Group 3 pumps slide the bearing retainer (#201D) against the outboard bearing and install and tighten the socket head capscrews (#201E). See Figure 31 for correct torque values.
10. The shaft, bearings, and bearing carrier assembly (Figure 25) can now be installed into the bearing housing (#119). The bearing carrier (#201) should be lubricated with oil on the O-rings and threads before installing the assembly into the bearing housing. Thread the bearing carrier into the bearing housing by turning it clockwise to engage the threads. Thread the carrier onto the housing until the carrier flange is approximately 1/8 in (3 mm) from the housing. Install the set screws (#201A) loosely.
11. Install a sight gage (#200) into the bearing housing. For the MARK IIIA design, first install the oil level message tag, shown in Figure 31.
12. If one was present, install a Trico oiler (#133) into the bearing housing. If not used, install a plug into the hole. When using a Trico oiler it is very important that a vent/breather be installed in the tapped hole on top of the bearing housing.
13. Install a drain plug (#134) into the bearing housing. Be sure to install the optional magnetic drain plug (#134M), if appropriate.
14. On Group 2 and 3 pumps, assemble the bearing housing adapter (#108) to the bearing housing (#119). Be sure to install a new O-ring (#131).
    <u>MARK IIIA design</u>
    Thread the capscrews (#139) through the adapter and into the tapped holes in the bearing housing.
    <u>Old style MARK III design</u>
    Use the capscrews (#139) and hexnuts (#139A). Orient the bearing housing adapter with the two holes for capscrews (#139) on a horizontal line.
15. If the pump has lip seals, install the deflector (#114).
16. If the pump is equipped with a hook type sleeve (#177), slip it into place over the impeller end of the shaft (#105).

WET END ASSEMBLY

Cartridge mechanical seals

Seal installation

Slide the cartridge seal (#153) onto the shaft until it lightly touches the bearing housing (#119) or adapter (#108). See Figure 39.

FIGURE 39

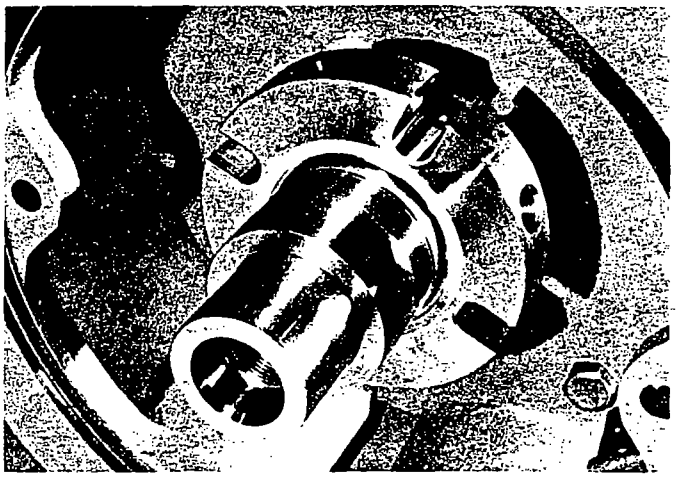

Rear cover plate installation

Install the rear cover plate (#106) to the bearing housing (Group 1) or the bearing housing adapter (Group 2 and 3) by using the capscrews (#140). Now install the cartridge seal gland to the rear cover plate (#106) using studs (#111) and nuts (#111A).

Impeller installation and clearance setting

Install the impeller (#103) as instructed in Appendix D, if reverse vane, or Appendix E, if a front vane open style impeller (See Figure 42).

Lock seal in place

Tighten set screws on the seal to lock the rotating unit to the shaft. Finally, remove centering clips from the seal.

Component type mechanical seal

Determination of seal location

In order to properly set a component seal it is necessary to first locate the shaft in its final axial position. This is accomplished in the following manner.

Install the rear cover plate (#106) to the bearing housing (Group 1) or the bearing housing adapter (Group 2 and 3) by using the capscrews (#140). Install the impeller (#103) as instructed in Appendix D, if reverse vane, or Appendix E, if a front vane open style impeller. Put blueing on the shaft in the area near the face of the seal chamber (rear cover #106). Scribe a mark on the shaft at the face of the seal chamber (Figure 40). Now the location of the seal can be determined by referring to the seal drawing supplied by the seal manufacturer.

Impeller/rear cover removal

Remove the impeller following instructions given in the "Disassembly" section on Page 22. Remove the rear cover following instructions given in the "Disassembly" section on Page 23.

FIGURE 40

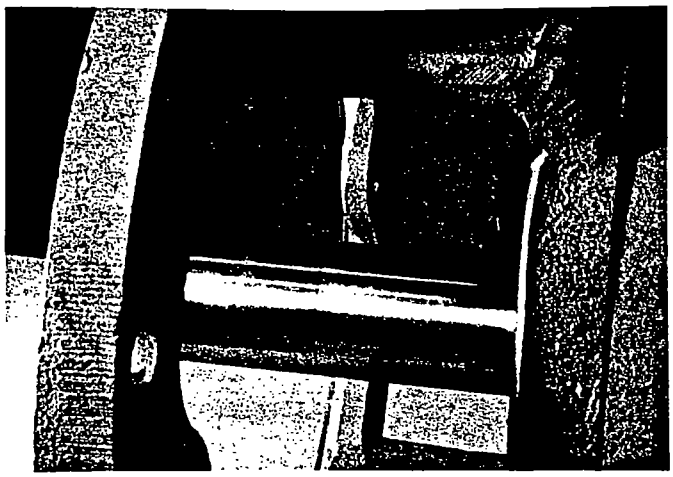

Gland installation

Install the gland (#190) and stationary seal components following the seal manufacturers instructions. Slide the gland and stationary seal components onto the shaft until it lightly touches the bearing housing or adapter. Install the gland gasket (#190G) into the gland. See Figure 41.

FIGURE 41

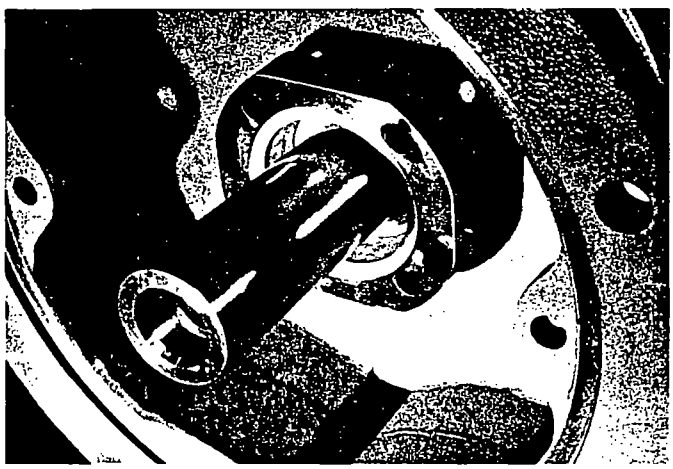

Seal installation

Install the rotating unit onto the shaft (or sleeve) following the seal manufacturers instructions (Figure 43).

FIGURE 42

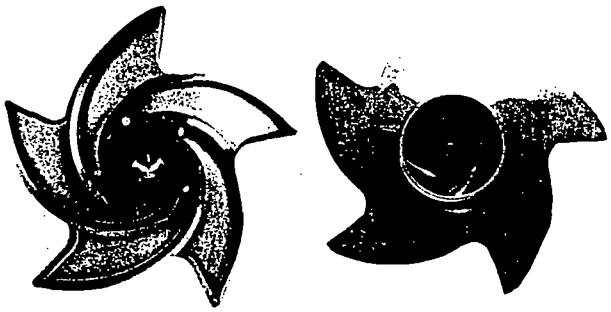

Front Vane Open Style Impeller

Reverse Vane Impeller

FIGURE 43

Rear cover plate installation
Install the rear cover plate (#106) to the bearing housing (Group 1) or the bearing housing adapter (Group 2 and 3) by using the capscrews (#140) (Figure 44). Now, install the gland (#190) to the rear cover plate (#106) using studs (#111) and nuts (#111A) (Figure 40).

FIGURE 44

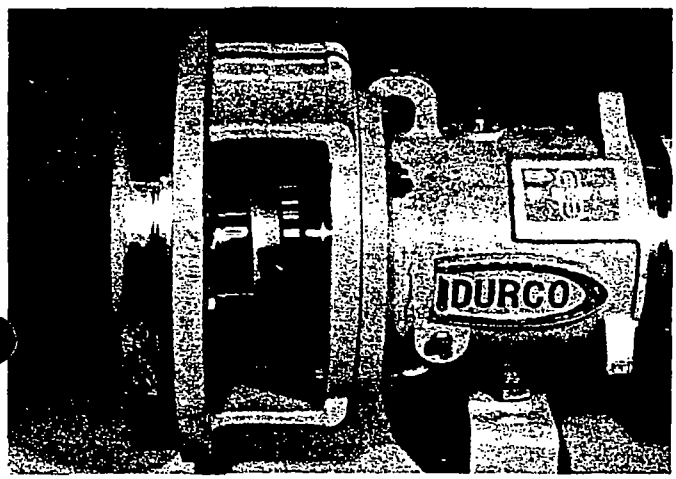

FIGURE 45

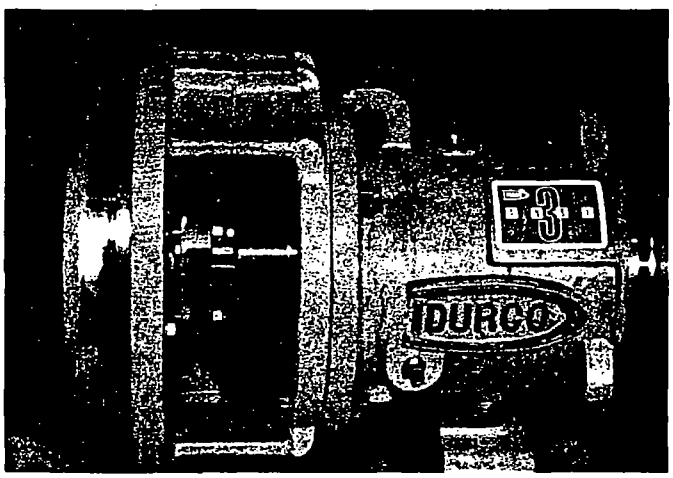

Impeller final installation
Install the impeller (#103) as instructed in Appendix D, if reverse vane, or Appendix E, if a front vane open style impeller. Remember that the impeller clearance is already set. It cannot be changed at this point without resetting the seal.

Packing with split gland

Rear cover plate installation
Install the rear cover plate (#106) to the bearing housing (Group 1) or the bearing housing adapter (Group 2 and 3) by using the capscrews (#140).

Impeller installation and clearance setting
Install the impeller (#103) as instructed in Appendix D, if reverse vane, or Appendix E, if a front vane open style impeller.

Packing/gland installation
Install the packing rings (#113) and seal cage halves (#112) into the stuffing box as shown in Figure 16. Always stagger the end gaps 90° to ensure a better seal. To speed installation of each ring, have an assistant turn the pump shaft in one direction. This movement of the shaft will tend to draw the rings into the stuffing box. A split gland (#110) is an assembly of two matched gland halves that are bolted together. Unbolt the gland halves and install the gland halves around the shaft. Bolt the halves together to form a gland assembly. Now, install the gland assembly (#110) using studs (#111) and nuts (#111A). Lightly snug up the gland. Final adjustments must be made after the pump has begun operation.

Packing with one piece gland

Gland installation
Slip gland over shaft and slide back to the bearing housing.

PACKING WITH ONE PIECE GLAND (Cont'd)

Rear cover plate installation
Install the rear cover plate (#106) to the bearing housing (Group 1) or the bearing housing adapter (Group 2 and 3) by using the capscrews (#140).

Impeller installation and clearance setting
Install the impeller (#103) as instructed in Appendix D, if reverse vane, or Appendix E, if a front vane open style impeller.

Packing installation
Install the packing rings (#113) and seal cage halves (#112) into the stuffing box as shown in Figure 16. Always stagger the end gaps 90° to ensure a better seal. To speed installation of each ring, have an assistant turn the pump shaft in one direction. This movement of the shaft will tend to draw the rings into the stuffing box. Now, attach the gland (#110) to the cover using studs (#111) and nuts (#111A). Lightly snug up the gland. Final adjustments must be made after the pump has begun operation.

BEARING LUBRICATION

Oil bath

The standard bearing housing bearings are oil bath lubricated and are not lubricated by Duriron. Before operating your pump, fill the bearing housing to the center of the oil sight glass with the proper type oil. (See Figure 46 for approximate amount of oil required – do not overfill.)

On the MARK IIIA design, an optional oil slinger is available. The oil slinger is not necessary; however, if used, it provides an advantage by allowing a larger tolerance in acceptable oil level. Without an oil slinger, the oil level in the bearing housing must be maintained at ±1/8 in (±3 mm) of the center of the sight glass. With the oil slinger, the oil level must be maintained at +1/8, -1/4 in (+3 mm, - 6 mm) of the center of the sight glass.

See Figure 47 for recommended lubricants. DO NOT USE DETERGENT OILS. The oil must be free of water, sediment, resin, soaps, acid and fillers of any kind. It should contain rust and oxidation inhibitors. The proper oil viscosity is determined by the bearing housing operating temperature as given in Figure 48.

To add oil to the housing, clean and then remove the vent plug (#135) at the top of the bearing housing, pour in oil until it is visually half way up in the sight glass (#200). Fill the constant level oiler bottle (Trico), if used, and return it to its position. The correct oil level is obtained with the constant level oiler in its lowest position, which results in the oil level being at the top of the oil inlet pipe nipple, or half way up in the sight glass window. Oil must be visible in the bottle at all times.

Note that on ANSI 3A™ power ends there is no Trico oiler. As stated above, proper oil level is the center of the "bull's eye" sight glass (#200) (Figure 29).

In many pumping applications lubricating oil becomes contaminated before it loses its lubricating qualities or breaks down. For this reason it is recommended that the first oil change take place after approximately 160 hours of operation, at which time, the used oil should be examined carefully for contaminants. During the initial operating period monitor the bearing housing operating temperature. Record the external bearing housing temperature. See Figure 49 for maximum acceptable temperatures. The normal oil change interval is based on temperature and is shown in Figure 50.

FIGURE 46
Amount of Oil Required

Pump Size	MK III Amount	MK IIIA Amount
Group 1	5 oz (148 ml)	8.5 oz (251 ml)
Group 2	19 oz (560 ml)	32 oz (946 ml)
Group 3	48 oz (1419 ml)	48 oz (1419 ml)

FIGURE 47
Recommended Lubricants

Mineral Oil	Quality mineral oil with rust and oxidation inhibitors. Mobil DTE Heavy/Medium ISO VG 68
Synthetic	Royal Purple or Conoco SYNCON 68. Some synthetic lubricants require Viton O-rings.
Grease	Chevron SRI #2 (or compatible)

FIGURE 48
Oil Viscosity Grades

Maximum Oil Temperature	ISO Viscosity Grade	Minimum Viscosity Index
Up to 160°F (71°C)	46	95
160-175°F (71°-80°C)	68	95
175-200°F (80°-94°C)	100	95

FIGURE 49
Maximum External Housing Temperatures

Lubrication	Temperature
Oil bath	180°F* (82°C)
Oil mist	180°F* (82°C)
Grease	200°F* (94°C)

* Synthetic oil and grease will allow higher temperatures.

FIGURE 50
Relubrication Intervals*

Lubricant	Under 160°F (71°C)	160-175°F (71-80°C)	175-200°F (80-94°C)
Grease	6 mo	3 mo	1.5 mo
Mineral Oil	6 mo	3 mo	1.5 mo
Synthetic Oil**	18 mo	18 mo	18 mo

* Assuming good maintenance and operation practices, and no contamination.
** May be increased to 36 months with ANSI 3A™ power end.

Grease

Single shielded regreasable bearings
When the grease lubrication option is specified, single shielded bearings, grease fittings and vent pipe plugs are installed inboard and outboard. The bearings are packed with Chevron SRI#2 grease prior to assembly. For relubrication, a grease with the same type base (non-soap polyuride) and oil (mineral) should be used. To regrease, remove the pipe plug from both the inboard and outboard bearing location. See Figure 51. Apply grease through the fittings until it comes out of the vent holes, then reinstall the pipe plugs.

Bearings configured as shown in Figure 32A will draw grease across the shield as needed.

FIGURE 51
Regreaseable Configuration

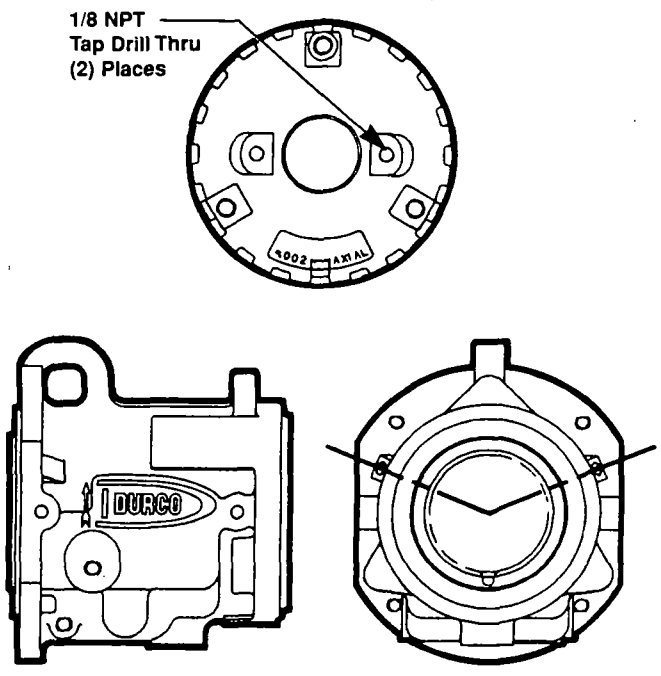

⚠CAUTION

Do not fill the housing with oil when greased bearings are used. The oil will leach the grease out of the bearings and the life of the bearings may be drastically reduced.

Double shielded or double sealed bearings
These bearings are packed with grease by the bearing manufacturer and should not be relubricated. Maintenance intervals for these bearings are greatly affected by their operating temperature and pump speed. However, the shielded bearing typically operates cooler, thus extending its life. Refer to Figure 50 for recommended maintenance intervals.

Oil mist

When optional oil mist lubricated bearings are specified, the bearing housing is furnished with a plugged 1/2 in NPT top inlet for connection to the user's oil mist supply system, a vent fitting in the bearing carrier, and a plugged 1/4 in NPT bottom drain. See Oil Mist Lubrication System on Page 14.

Do not allow oil level to remain above the center of the bearing housing sight glass window with purge mist (wet sump) systems.

The optional oil slinger must not be used with an oil mist system.

REINSTALLATION

The pump is now ready to be returned to service. It should be reinstalled as described in the installation section.

4.6 SPARE PARTS

RECOMMENDED SPARE PARTS – STANDARD MARK III PUMP

The decision on what spare parts to stock varies greatly depending on many factors such as the criticality of the application, the time required to buy and receive new spares, the erosive/corrosive nature of the application, and the cost of the spare part. Figures 52, 53, and 54 give the parts list for a typical MARK III pump. Please refer to the "Durco Pump Parts Catalog" for more information.

HOW TO ORDER SPARE PARTS

Spare parts can be ordered from your local Durco Sales Engineer, or from your Durco Distributor or Representative. You will need to give the pump size and type from the name plate on the bearing housing. See Figure 3. You will also need to provide the item number, description, and alloy for the part(s) you wish to order.

To make parts ordering easy, Durco has created a catalog titled "Durco Pump Parts Catalog." A copy of this book can be obtained from your local Durco Sales Engineer or Distributor/Representative.

FIGURE 52 - Group 1

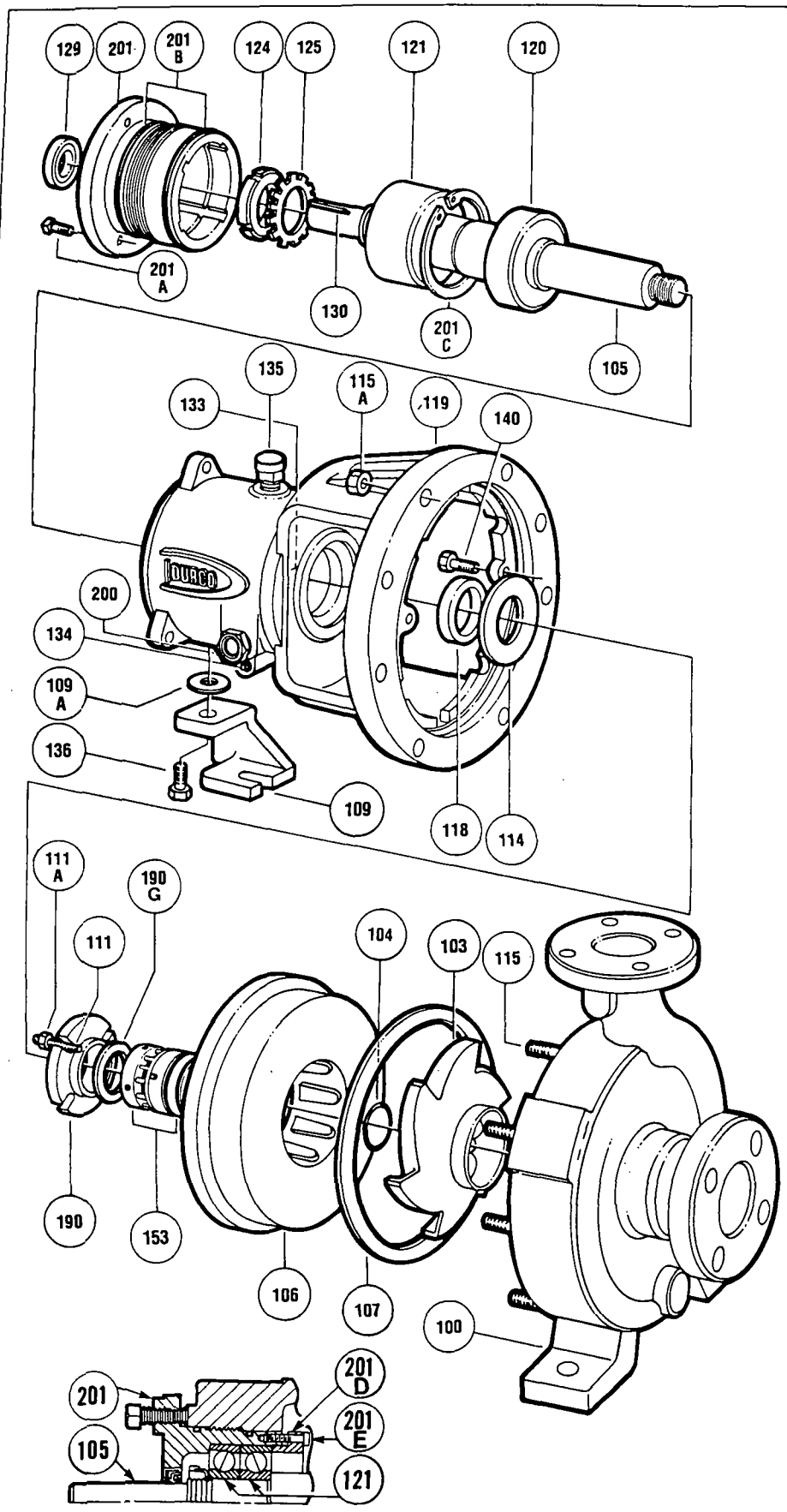

ITEM	DESCRIPTION	
100	CASING	
103	IMPELLER	
104	IMPELLER GASKET	
105	SHAFT	
106	REAR COVER PLATE	
107	REAR COVER GASKET	
108	BEARING HOUSING ADAPTER	N/A
109	BEARING HOUSING FOOT	
109A	SHIM	
110	GLAND - PACKING	OPT.
111	STUD - GLAND	
111A	HEXNUT - GLAND	
112	PACKING SEAL CAGE HALVES	OPT.
113	PACKING	OPT.
114	DEFLECTOR INBOARD	OPT.
115	STUD - CASING	
115A	HEXNUT - CASING	
118	OIL SEAL INBOARD	
119	BEARING HOUSING	
120	BEARING INBOARD	
121	BEARING OUTBOARD	
122	OIL SLINGER	OPT.
124	LOCKNUT - BEARING	
125	LOCKWASHER - BEARING	
129	OIL SEAL OUTBOARD	
130	KEY - SHAFT/COUPLING	
131	O-RING - ADAPTER	N/A
133	TRICO OILER (Not Shown)	
134	BEARING HOUSING DRAIN PLUG	
135	BEARING HOUSING VENT PLUG	
136	CAPSCREW - FOOT	
139	CAPSCREW - BEARING HOUSING	N/A
140	CAPSCREW - COVER/ADAPTER	
153	MECHANICAL SEAL	
177	HOOK SLEEVE	OPT.
190	GLAND - MECHANICAL SEAL	
190G	GLAND GASKET	
200	SIGHT GAGE - BEARING HOUSING	
201	BEARING CARRIER	
201A	SET SCREW - BEARING CARRIER	
201B	O-RING - BEARING CARRIER	
201C	BEARING CARRIER RETAINER	
201D	CLAMP RING BEARING HOUSING	OPT.
201E	SOC-CAPSCREW CLAMP	OPT.

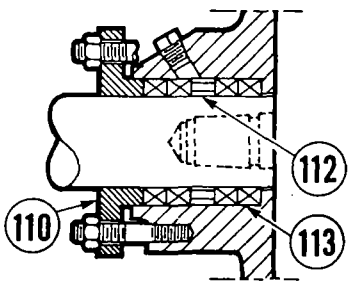

FIGURE 53 - Group 2

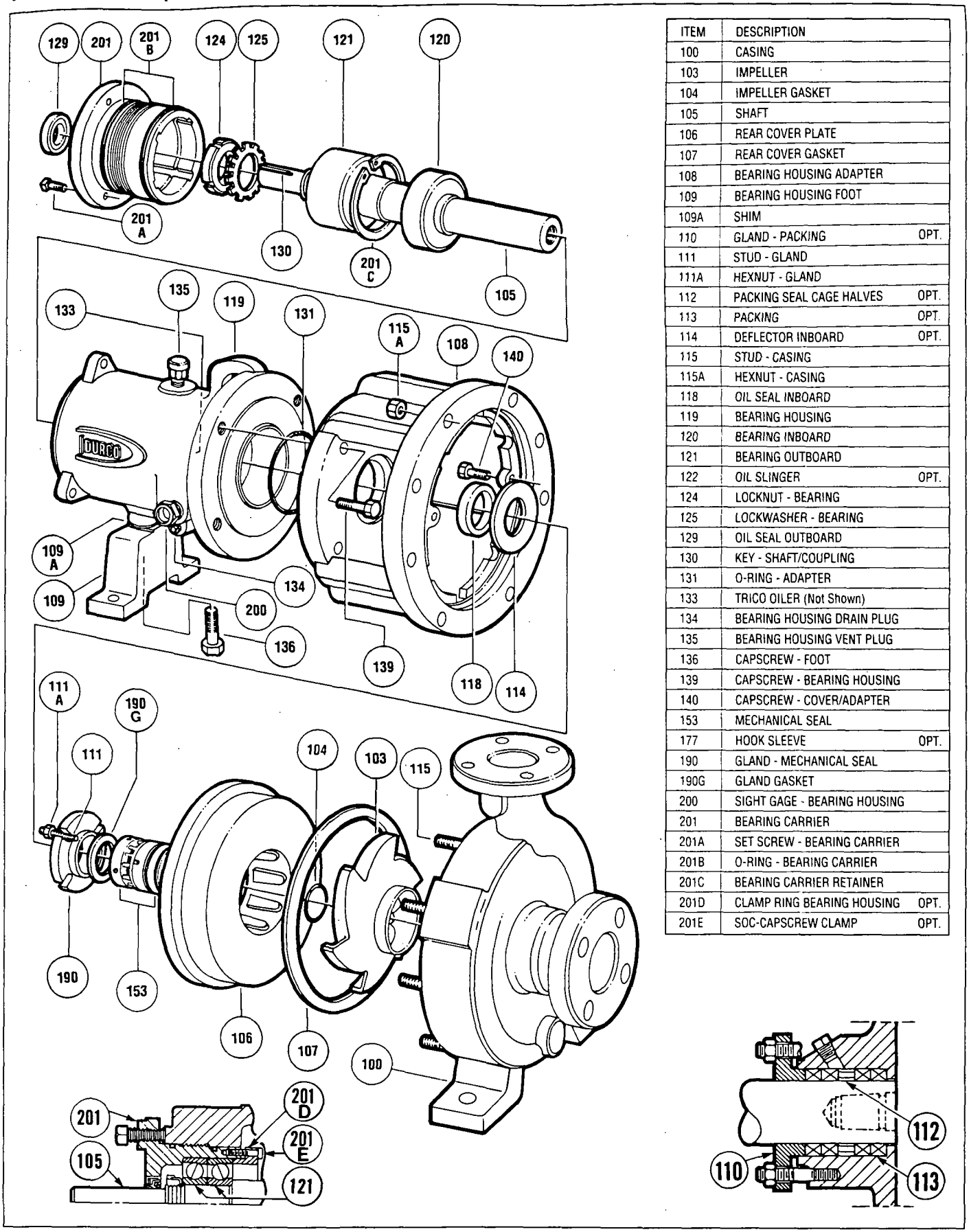

ITEM	DESCRIPTION	
100	CASING	
103	IMPELLER	
104	IMPELLER GASKET	
105	SHAFT	
106	REAR COVER PLATE	
107	REAR COVER GASKET	
108	BEARING HOUSING ADAPTER	
109	BEARING HOUSING FOOT	
109A	SHIM	
110	GLAND - PACKING	OPT.
111	STUD - GLAND	
111A	HEXNUT - GLAND	
112	PACKING SEAL CAGE HALVES	OPT.
113	PACKING	OPT.
114	DEFLECTOR INBOARD	OPT.
115	STUD - CASING	
115A	HEXNUT - CASING	
118	OIL SEAL INBOARD	
119	BEARING HOUSING	
120	BEARING INBOARD	
121	BEARING OUTBOARD	
122	OIL SLINGER	OPT.
124	LOCKNUT - BEARING	
125	LOCKWASHER - BEARING	
129	OIL SEAL OUTBOARD	
130	KEY - SHAFT/COUPLING	
131	O-RING - ADAPTER	
133	TRICO OILER (Not Shown)	
134	BEARING HOUSING DRAIN PLUG	
135	BEARING HOUSING VENT PLUG	
136	CAPSCREW - FOOT	
139	CAPSCREW - BEARING HOUSING	
140	CAPSCREW - COVER/ADAPTER	
153	MECHANICAL SEAL	
177	HOOK SLEEVE	OPT.
190	GLAND - MECHANICAL SEAL	
190G	GLAND GASKET	
200	SIGHT GAGE - BEARING HOUSING	
201	BEARING CARRIER	
201A	SET SCREW - BEARING CARRIER	
201B	O-RING - BEARING CARRIER	
201C	BEARING CARRIER RETAINER	
201D	CLAMP RING BEARING HOUSING	OPT.
201E	SOC-CAPSCREW CLAMP	OPT.

FIGURE 54 - Group 3

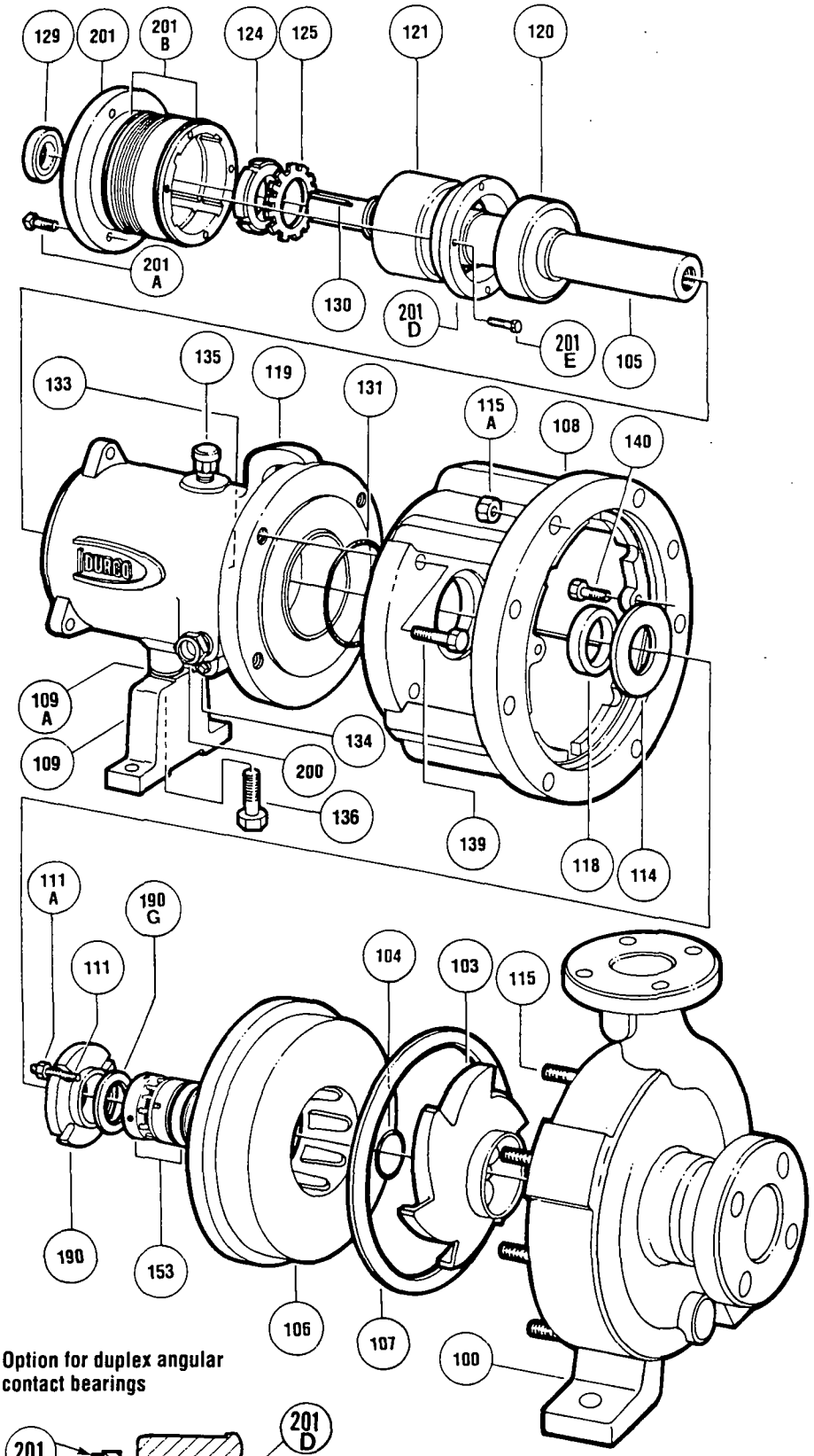

ITEM	DESCRIPTION	
100	CASING	
103	IMPELLER	
104	IMPELLER GASKET	
105	SHAFT	
106	REAR COVER PLATE	
107	REAR COVER GASKET	
108	BEARING HOUSING ADAPTER	
109	BEARING HOUSING FOOT	
109A	SHIM	
110	GLAND - PACKING	OPT.
111	STUD - GLAND	
111A	HEXNUT - GLAND	
112	PACKING SEAL CAGE HALVES	OPT.
113	PACKING	OPT.
114	DEFLECTOR INBOARD	OPT.
115	STUD - CASING	
115A	HEXNUT - CASING	
118	OIL SEAL INBOARD	
119	BEARING HOUSING	
120	BEARING INBOARD	
121	BEARING OUTBOARD	
122	OIL SLINGER	OPT.
124	LOCKNUT - BEARING	
125	LOCKWASHER - BEARING	
129	OIL SEAL OUTBOARD	
130	KEY - SHAFT/COUPLING	
131	O-RING - ADAPTER	
133	TRICO OILER (Not Shown)	
134	BEARING HOUSING DRAIN PLUG	
135	BEARING HOUSING VENT PLUG	
136	CAPSCREW - FOOT	
139	CAPSCREW - BEARING HOUSING	
140	CAPSCREW - COVER/ADAPTER	
153	MECHANICAL SEAL	
177	HOOK SLEEVE	OPT.
190	GLAND - MECHANICAL SEAL	
190G	GLAND GASKET	
200	SIGHT GAGE - BEARING HOUSING	
201	BEARING CARRIER	
201A	SET SCREW - BEARING CARRIER	
201B	O-RING - BEARING CARRIER	
201C	BEARING CARRIER RETAINER	
201D	CLAMP RING BEARING HOUSING	
201E	SOC-CAPSCREW CLAMP	

Option for duplex angular contact bearings

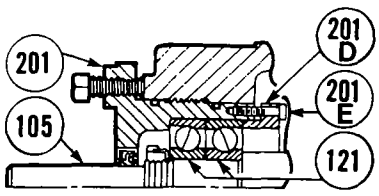

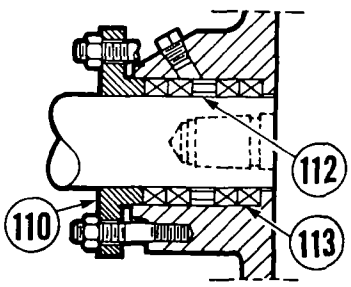

Section 5.0 MARK III SEALMATIC PUMP

5.1 GENERAL DESCRIPTION OF THE PUMP

The MARK III Sealmatic pump is an extension of the MARK III Standard ANSI pump with a special rear cover, repeller and repeller cover interchanged for the Standard pump rear cover. The repeller provides a dynamic seal and keeps the seal chamber area clear of liquid when the pump is operating. A static seal is required to prevent leakage when the pump is not operating. There are three optional static sealing devices offered. The optimal choice is determined by the application.

An important feature of the MARK III Sealmatic pump is that it utilizes the standard Durco MARK IIIA power end with the standard family of shafts. The repeller slips over the end of the standard shaft with a hook coming against the end of the shaft. The hook is squeezed and held in place by the impeller.

The Sealmatic can be supplied on any Group 2 or Group 3 MARK III pump.

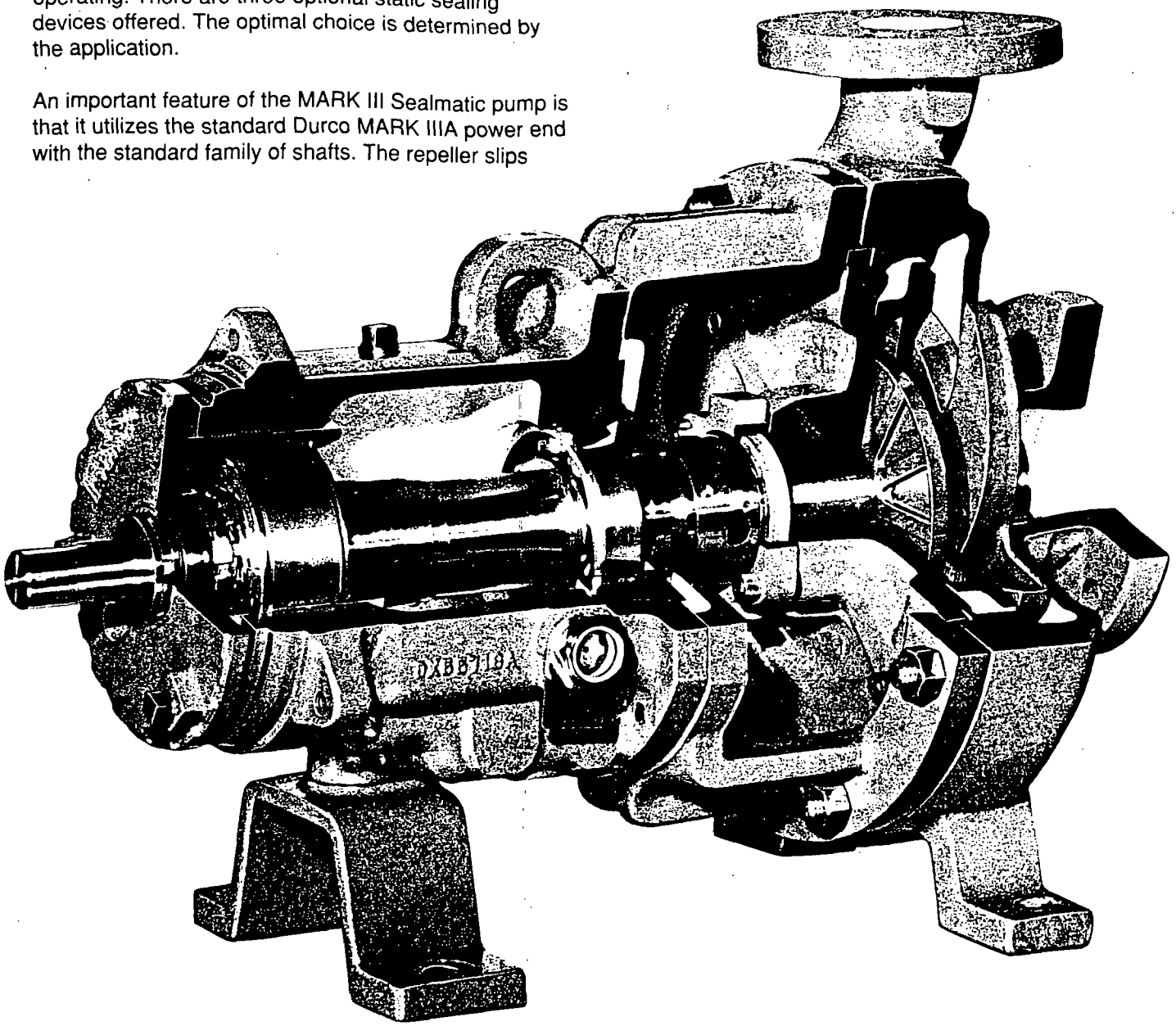

5.2 OVERVIEW

REPELLER FUNCTION

This pump differs from the conventional MARK III in that it has a repeller (#181). The repeller is a hydro-dynamic sealing device. When the pump is operating, it pumps the fluid out of the seal chamber.

DESIGN DIFFERENCE

The rear cover/repeller cover design is different for Group 2 and Group 3 pumps. Figure 56 shows the Group 2 design and Figure 57 shows the Group 3 design. ***Note:*** Only the reverse vane impeller can be used in the Sealmatic pump. The front vane open style impeller should not be used.

SEAL OPTIONS

When the pump is not operating, a static seal is required. Three designs are available. The choice of design depends on the application.

FIGURE 55

Item	Part Name
100	Casing
103	Impeller
104	Impeller Gasket
106	Rear Cover
107	Rear Cover Gasket
110	Gland
111	Stud
111A	Hex Nut
112	Seal Cage
113	Packing
115	Casing Studs
115A	Casing Studs Nuts
140	Capscrews - Adapter to Cover
180	Cover Repeller
181	Repeller
181A	Repeller O-ring
182	Gasket - Repeller Cover
183	Repeller O-ring
190	Gland
195	Capscrews - Repeller Cover to Cover
297	Seat
298	Lip Seal
299	Lip Seal O-ring
330	Mechanical Seal

FIGURE 56 – Group 2

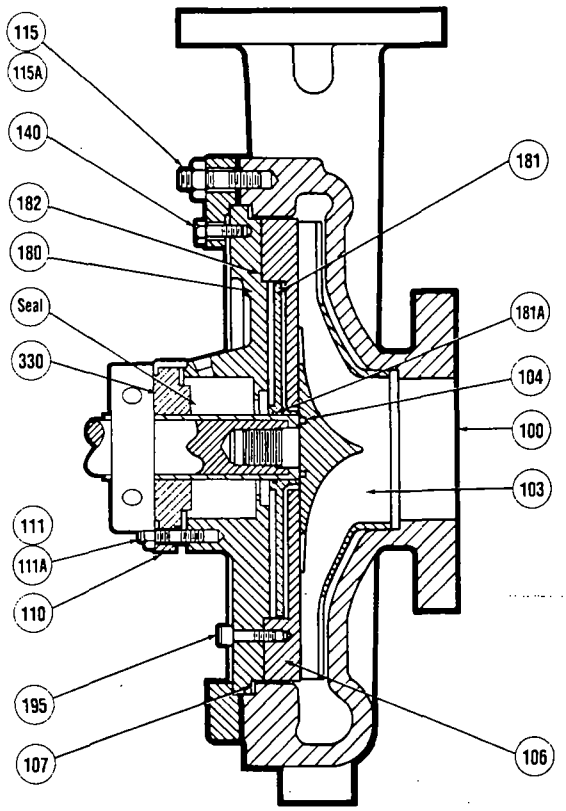

FIGURE 57 – Group 3

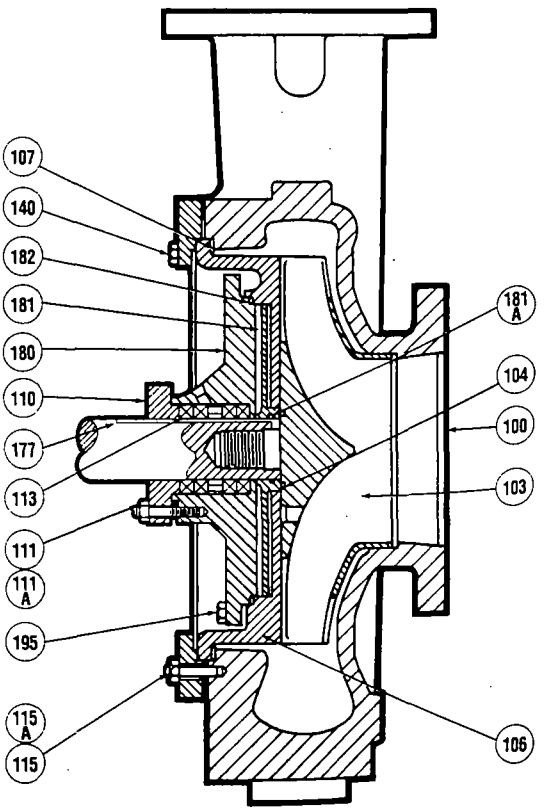

SEAL OPTIONS (Cont'd)

Packing – Option A

This option utilizes graphite packing to obtain a static seal. The standard packed unit as shown in Figure 57 and 58 is recommended for clear fluids and requires no lubrication or flushing. For applications where the pumpage contains solids that may crystalize or settle out when the pump is idle, the 1/4 in NPT flush port and packing arrangement as show in Figure 59 can be utilized to purge flush prior to start-up or shut-down.

FIGURE 58

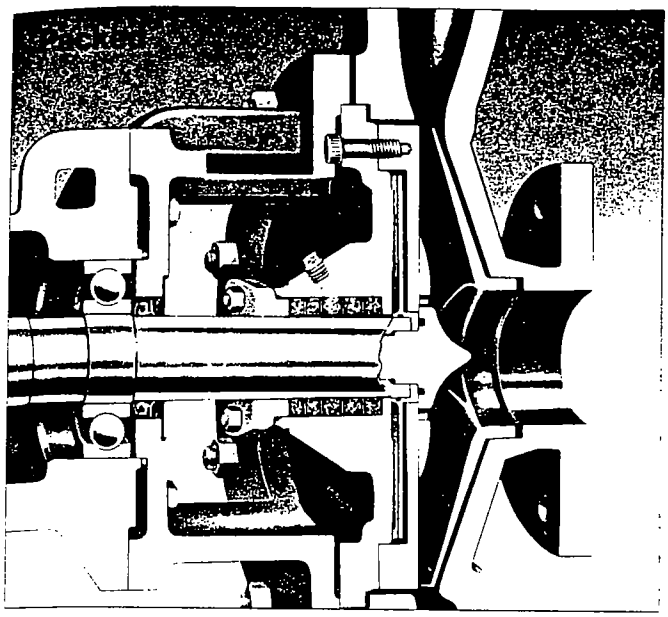

FIGURE 59

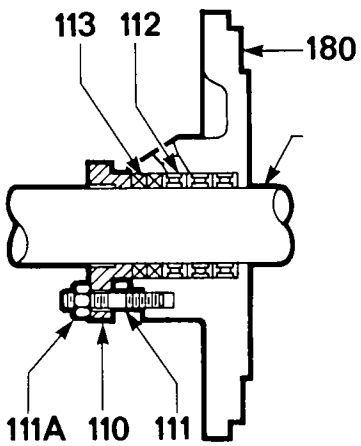

Checkmatic – Option B

This design utilizes the packed box cover and consists of a gland, ceramic seat and opposing rotating lips which contact the ceramic seat faces. The inboard lip seals at shut-down and the outboard lip seals against air intake during operation. Available on all Sealmatic pumps. See Figure 60 and 61.

FIGURE 60

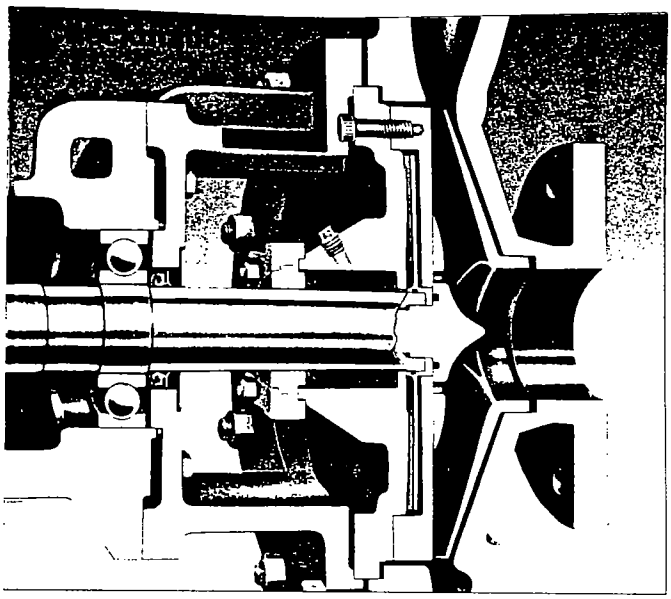

FIGURE 61

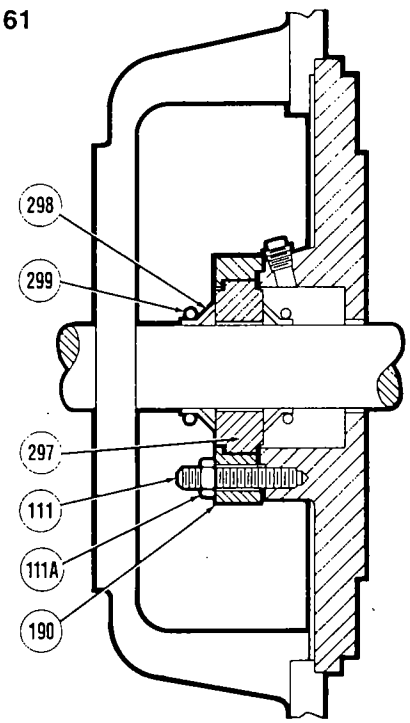

Dry Running Seals – Option C

Dry running gas seals utilize special seal face configurations that create a hydrodynamic film of air between the seal faces when the pump is operating. This film forms a seal, prevents face contact, and eliminates heat generation. When the pump is not running, springs keep the faces in contact, thereby providing a static seal. The dynamic seal is maintained by the repeller. See Figure 56 and 62.

FIGURE 62

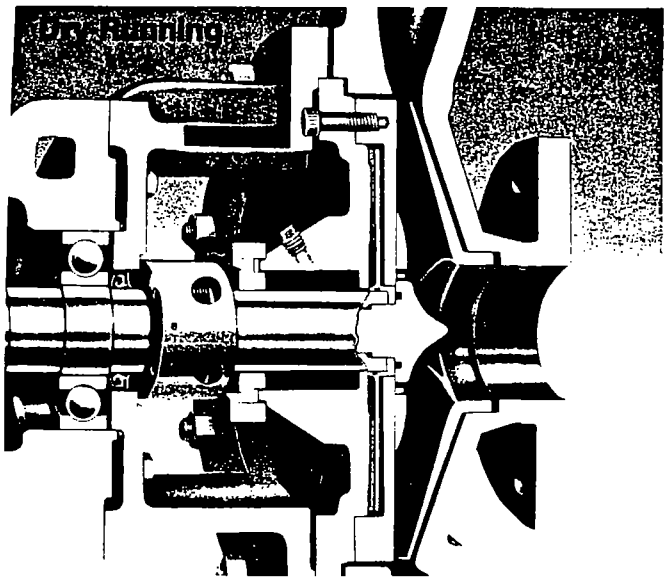

5.3 OPERATION

GENERAL INFORMATION

The Durco MARK III Sealmatic pump was designed and sized to specific operating requirements. Your Durco sales person has carefully selected the correct Sealmatic pump for your system. Under no circumstance should a Sealmatic pump be operated under any conditions other than those for which it was intended without the recommendation of a Durco sales representative.

START-UP

When starting a Sealmatic pump for the first time make certain that the suction valve is completely open, the discharge valve is throttled and that there is liquid in the pump. Determine that there will be a positive head at the suction when start-up is made. Check the technical data and nameplate to make certain that the repeller is capable of handling the suction head.

5.4 MAINTENANCE

DISASSEMBLY OF GROUP 2 PUMPS

1. Remove the impeller (#103).
2. Remove the gland nuts (#111A).
3. Remove the capscrews (#195) that hold the rear cover (106) to the repeller cover (#180). Remove the cover.
4. The repeller (#181) is now exposed and should be free to slip from the shaft. If not, take two flat tools such as heavy screwdrivers and insert between the repeller and repeller cover at two points 180° apart and exert firm pressure against the repeller. This should break it free from the shaft.
5. Remove the repeller cover (#180).
6. Remove shaft seal components and gland.

DISASSEMBLY OF GROUP 3 PUMPS

1. Remove the impeller (#103).
2. Remove the gland nuts (#111A).
3. Remove the capscrews (#195) that hold the rear cover (106) to the repeller cover (#180). Remove the cover.
4. The repeller (#181) is now exposed and should be free to slip from the shaft. If not, use the Durco impeller wrench and the techniques described on Page 22. This should break it free from the shaft.
5. Remove the repeller cover (#180).
6. Remove shaft seal components and gland.

REASSEMBLY – SEALMATIC WITH PACKING

1. Reinstall repeller cover, repeller, rear cover, and impeller as instructed in Appendix H.
2. Reinstall packing.
3. Attach gland (#110) to repeller cover (#180) using studs (#111) and nuts (#111A).

REASSEMBLY – SEALMATIC WITH CHECKMATIC SEAL

1. Remove any sharpness of edge at wet end of shaft with #400 emery cloth. Clean all exposed surfaces of the wet end of the shaft. Install a shaft guide tool from the Durco Tool Kit, Figure 21. Do not lubricate surfaces. Slide one lip seal onto the shaft with a lip facing away from the bearing housing. Position the O-ring (#299) over the tail of the lip seal. See Figure 61. Slide it all the way to the bearing housing.
2. Clean all surfaces of the gland, and install the ceramic into the gland.
3. Slide gland/ceramic seat assembly onto the shaft and move it back to the lip seal.
4. Slide a second lip seal onto the shaft, with the lip facing the bearing housing, all the way to the ceramic seat. Position the O-ring (#299) over the tail of the lip seal. See Figure 61.
5. Reinstall the repeller cover, repeller, rear cover, and impeller as instructed in Appendix H.
6. The Checkmatic gland must now be moved forward toward the impeller, pushing the forward lip ahead of it. It is important that the forward lip be firmly loaded against the seat when the gland is seated. Care must be taken to maintain even pressure on both sides of the gland, keeping the lip seal/ceramic seal faces perpendicular to the shaft. Tighten the gland nuts evenly. Finally, the rear lip must be slipped forward and tight against the seat. Care should be taken so as not to damage the seal face.

REASSEMBLY – SEALMATIC WITH DRY RUNNING SEAL

Note: The John Crane 28LD seal is used as an example.

1. Lubricate shaft and 28LD internal O-ring with non-abrasive liquid hand soap.
2. Slide 28LD all the way back to bearing housing.
3. Place repeller cover (#180) face down on work bench and install 28LD seat with gland gasket and attach gland.
4. Install repeller cover, repeller, rear cover, and impeller as instructed in Appendix H except this time do not adjust the shaft.
5. Slide rotary of 28LD seal forward until its disc and scribe line line up. Then tighten set screws. Pump power unit is ready for casing installation.

5.5 MISCELLANEOUS INFORMATION

There are two basic repeller configurations, one to accommodate only positive suction heads of fairly large magnitude and another dual head repeller that will accommodate suction heads that may be negative as well as positive; while the pump is in operation, however, the magnitude of its positive head capability is reduced. It should be understood that under no circumstances can the pump be started and primed unless the suction piping is flooded with liquid. This requirement would preclude the use of a SEALMATIC pump as a normally employed self-priming pump. Performance capabilities of the available repellers are given in the Durco bulletin "Sealmatic Repeller Selection Curves."

REPELLER SELECTION INSTRUCTIONS

To select a repeller, compare the range of suction pressures expected in each application to the repeller characteristic curves. The curves show the range of static suction heads for which the repeller has been tested and found to prevent leakage. These curves are published in the "Repeller Selection Curves" brochure.

Some liquids have physical properties which tend to reduce the stability of the air-liquid interface created by the repeller in the repeller chamber. This instability may lead to a misting of liquid which can result in a small stream of leakage or a constant dripping from the shaft area. Generally, selecting a repeller which will operate toward the high end of its suction head capability will assure a more stable air-liquid interface and thus avoid this problem.

Caution must be exercised in applying Sealmatic pumps for liquids having surface tensions below 50 dynes per cm at 3600 rpm and below 30 dynes per cm at 1800 rpm. Such liquids have a greater tendency to be atomized by the repeller vanes moving through the air-liquid interface. The resultant vapor may then condense on the non-wetted internal surfaces and drip from the shaft area. Consult your Durco Sales Engineer for assistance with applications involving low surface tensions.

In certain applications of Sealmatic pumps, air may be entrained in the liquid being pumped. Figure 63 shows the typical rate of air ingress for the 7 1/2 in (191 mm) diameter dual head repeller in a 10 in (254 mm) pump at 1800 rpm. Approximately the same rate of ingress should be expected with other repellers. Note that air ingress can be kept to an extremely low level by selecting a repeller to operate near its maximum suction head capability.

Horsepower consumed by the repeller is shown on the repeller performance characteristic curves. This horsepower is added to the horsepower taken from the standard pump performance curve to determine the total water horsepower requirement for the Sealmatic pump.

Some of the horsepower consumed by the repeller is imparted to the liquid in the repeller chamber as heat. The amount of heat imparted during 1800 rpm operation is negligible; however, it may be significant at 3600 rpm. The repeller hub is designed to promote circulation of liquid between the repeller chamber and the casing and prevent temperature build-up by dissipating the heat throughout the volume of liquid passing through the casing. Figure 63A shows anticipated temperature rise in the repeller chamber for various flow rates through the casing. Where temperature rise may be critical, contact your Durco Sales Engineer. ***Note:*** The Sealmatic must be flooded at time of start-up.

FIGURE 63
Air Ingress into Product at Standard Atmosphere vs. Static Suction Head

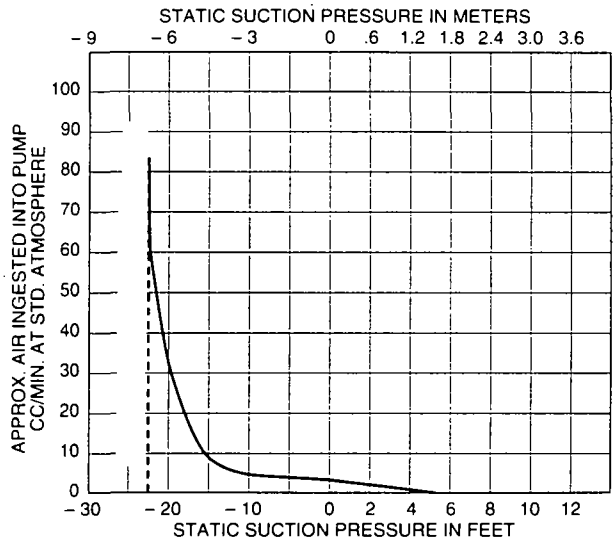

FIGURE 63A
Temperature Rise in Repeller Chamber vs. Static Suction Head

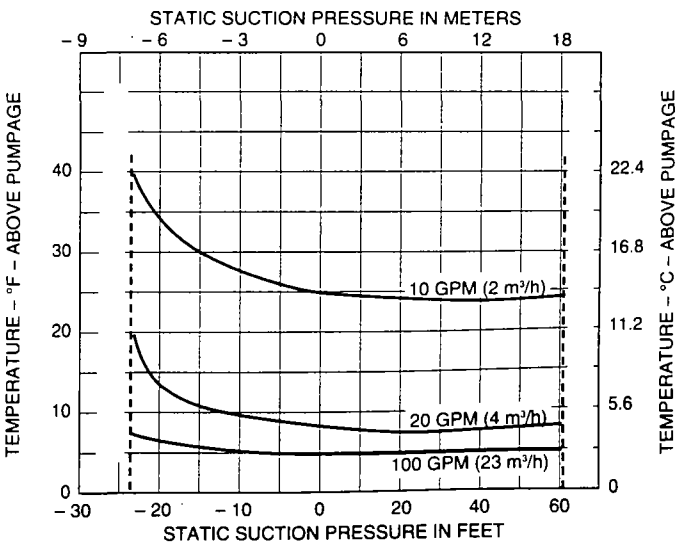

5.6 SEALMATIC SPARE PARTS

Note: Group 2 pump is shown. See Figure 54 to see a Group 3 power end. See Figures 55, 56, 57 for additional wet end drawings.

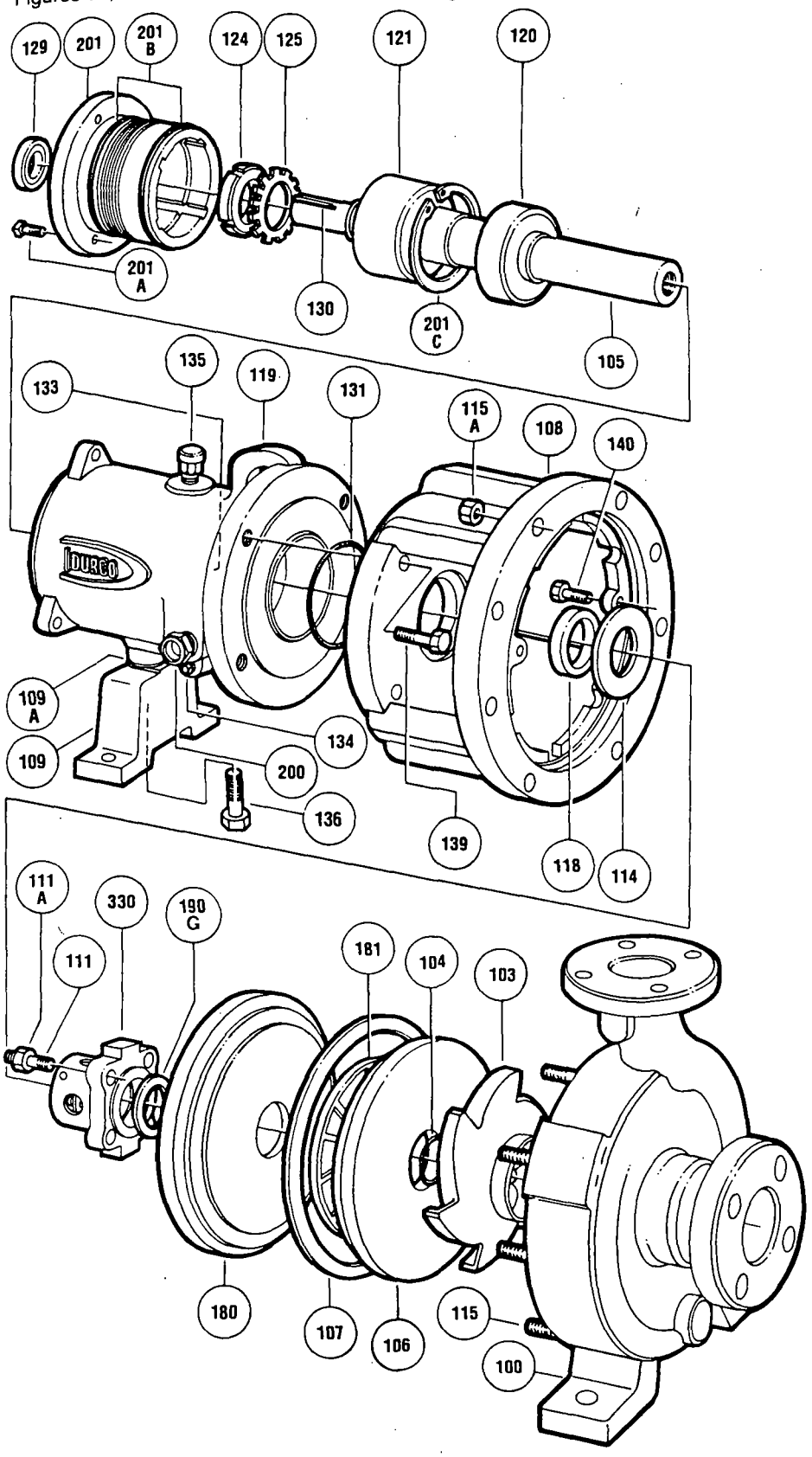

ITEM	DESCRIPTION	
100	CASING	
103	IMPELLER	
104	IMPELLER GASKET	
105	SHAFT	
106	REAR COVER PLATE	
107	REAR COVER GASKET	
108	BEARING HOUSING ADAPTER	
109	BEARING HOUSING FOOT	
109A	SHIM	
110	GLAND - PACKING	OPT.
111	STUD - GLAND	
111A	HEXNUT - GLAND	
112	PACKING SEAL CAGE HALVES	OPT.
113	PACKING	OPT.
114	DEFLECTOR INBOARD	OPT.
115	STUD - CASING	
115A	HEXNUT - CASING	
118	OIL SEAL INBOARD	
119	BEARING HOUSING	
120	BEARING INBOARD	
121	BEARING OUTBOARD	
122	OIL SLINGER	OPT.
124	LOCKNUT - BEARING	
125	LOCKWASHER - BEARING	
129	OIL SEAL OUTBOARD	
130	KEY - SHAFT/COUPLING	
131	O-RING - ADAPTER	
133	TRICO OILER (Not Shown)	
134	BEARING HOUSING DRAIN PLUG	
135	BEARING HOUSING VENT PLUG	
136	CAPSCREW - FOOT	
139	CAPSCREW - BEARING HOUSING	
140	CAPSCREW - COVER/ADAPTER	
153	MECHANICAL SEAL	
177	HOOK SLEEVE	OPT.
180	COVER - REPELLER	
181	REPELLER	
190	GLAND - MECHANICAL SEAL	
190G	GLAND GASKET	
200	SIGHT GAGE - BEARING HOUSING	
201	BEARING CARRIER	
201A	SET SCREW - BEARING CARRIER	
201B	O-RING - BEARING CARRIER	
201C	BEARING CARRIER RETAINER	
201D	CLAMP RING BEARING HOUSING*	
201E	SOC-CAPSCREW CLAMP*	
330	MECHANICAL SEAL	

*OPTIONAL GROUP 2

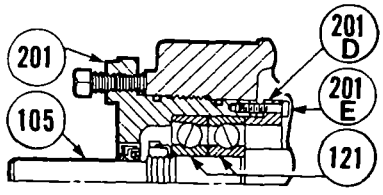

6.0 MARK III UNITIZED SELF-PRIMING PUMP

6.1 GENERAL DESCRIPTION OF THE PUMP

MARK III Unitized Self-Priming pumps combine the best design features of MARK III Standard pumps with efficient self-priming casings. These 'specific-purpose' wet end parts fit the basic building block philosophy in that they utilize the Standard pump components from the impeller on back to the bearing housing. The self-priming casings were designed to pump from liquid sources which do not flow naturally to the pump's suction, such as from sumps or from the tops of tank cars.

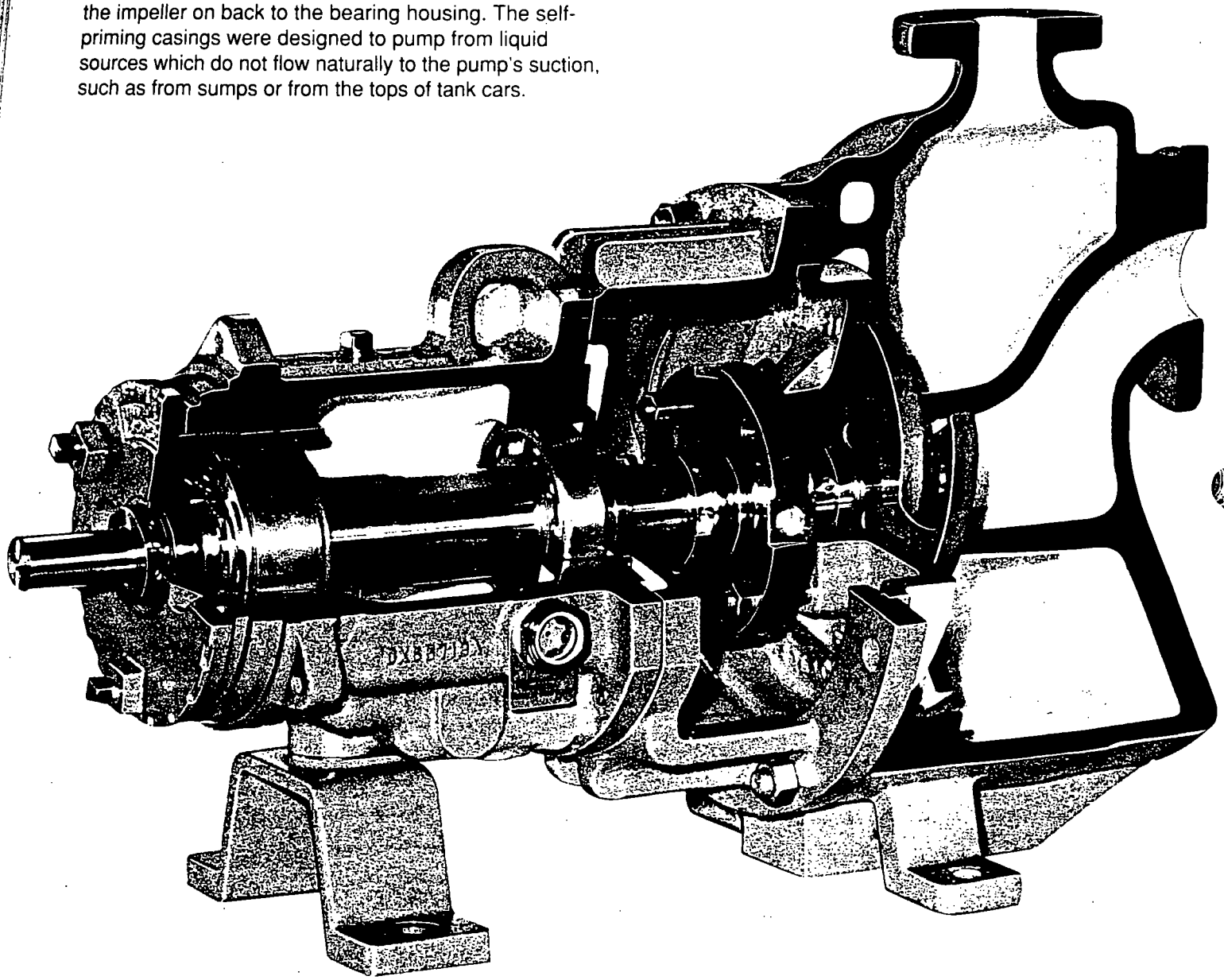

6.2 PUMP INSTALLATION AND OPERATION

Installation of the self-priming pump is perhaps more critical than any other of the Durco centrifugal pumps. The suction piping must be as short as possible and be as close to the diameter of the pump's suction nozzle as is practical.

The pump works by removing the air contained in the suction piping. Once removed, it operates exactly the same as a flooded suction Standard pump. The longer the suction pipe, the greater the volume of air that has to be removed. The larger the diameter of the pipe, the greater the volume of air. The suction piping and the seal chamber/stuffing box must be airtight, for any leak will destroy the partial vacuum which is created by the impeller. This vacuum is what allows the liquid to enter the pump.

Initial priming liquid must be added to the pump casing until the liquid level has reached the bottom of the suction nozzle (See Figure 64). Once the initial prime is in place, the pump will automatically replenish itself and additional priming liquids are not normally necessary. If the pump sits idle in the hot sun for extended periods, additional priming liquid might have to be added to make up for evaporation losses. Another important dimension to check is the minimum submergence of the suction pipe into the sump, "S" as shown in Figure 64. See Figure 68 for the acceptable minimum values for "S".

The priming cycle begins pump operation. When the pump is turned on, the spinning impeller quickly moves the priming liquid out of the suction nozzle creating a partial vacuum in the suction line. The sump liquid begins to rise in the suction line, or the liquid in the tank car begins its ascent up the dip tube (See Figure 67). The liquid passes from the impeller and back into the casing where any entrained air is vented out the discharge nozzle. There must be a way for this air to vent. Our typical recommendation is to provide a small diameter air bleed line from discharge pipe to sump if the air is not able to freely vent out the discharge pipe as shown in Figure 66. The liquid falls to the bottom of the priming chamber where it passes through a bypass slot connecting the priming chamber with the volute. The liquid then returns to the impeller where it is mixed with air from the suction pipe. This mix of liquid and air is pumped to the priming chamber again until all of the air is removed from the suction piping. This process may take anywhere from 15 seconds to several minutes depending upon the amount of air to be removed.

FIGURE 64

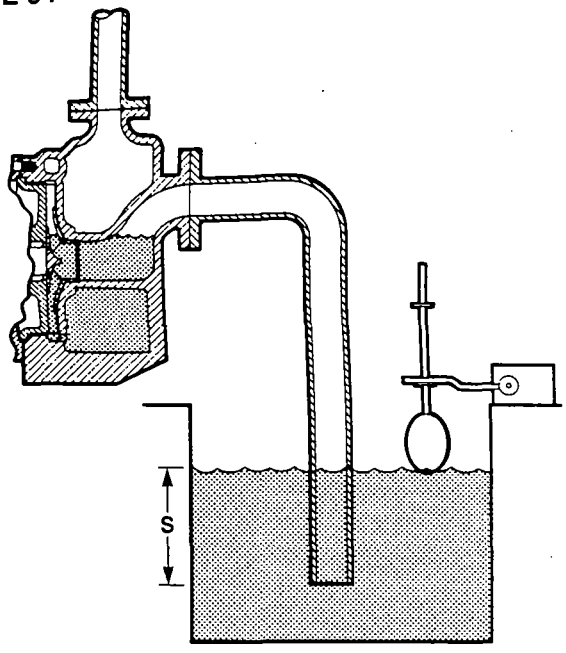

FIGURE 65

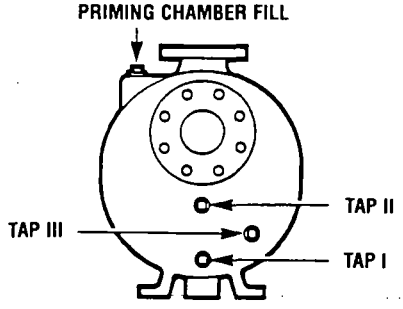

FIGURE 66

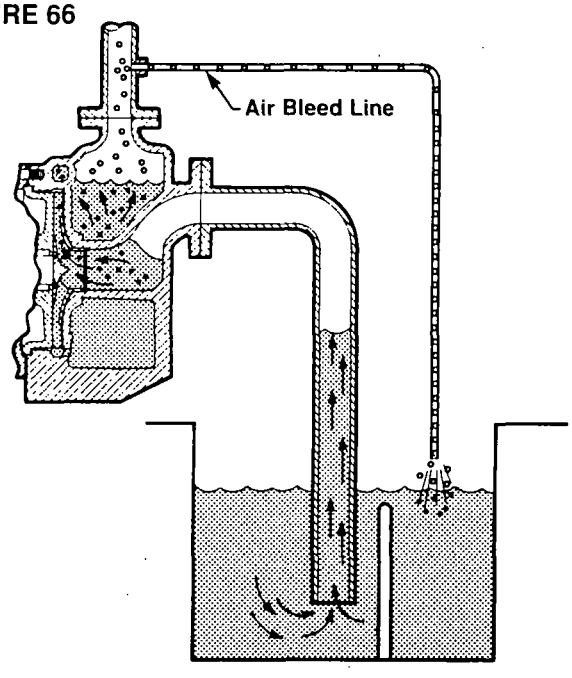

Normal operation commences as soon as the suction piping and the priming chamber are void of air (See Figure 67). Liquid from the impeller then passes through the discharge passage and into the priming chamber. At the same time, liquid from the impeller also passes through the bypass slot in the bottom of the casing and into the priming chamber. These two flows join and pass out of the priming chamber through the discharge nozzle located at the top of the chamber.

FIGURE 67

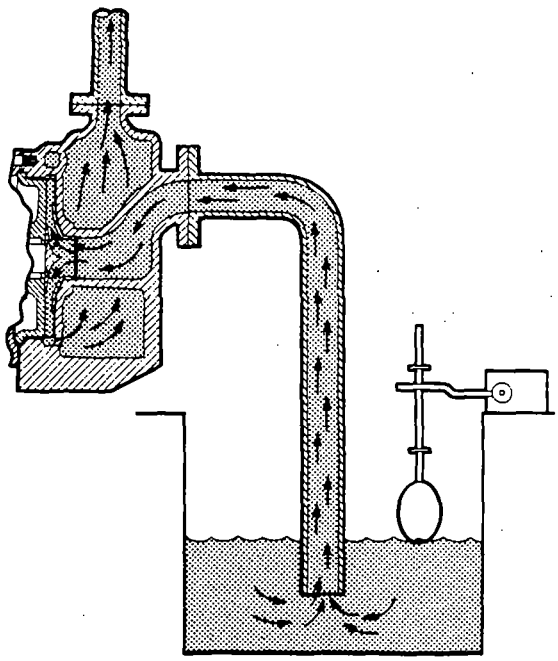

Shut down occurs when the pump is turned off either by a float switch in the sump or manually by the pump operator. The liquid in the discharge piping falls back into the priming chamber and washes back through the impeller and suction nozzle. The backwash creates a siphon effect in the casing and suction nozzle until the liquid falls below the nozzle level and the siphon is broken. The inertia of the liquid flowing backwards pulls the level of the priming chamber to a lower level than achieved with the initial fill. Though the level is lower, there is still sufficient liquid in the priming chamber to allow the pump to reprime itself during the next pumping cycle.

FIGURE 68

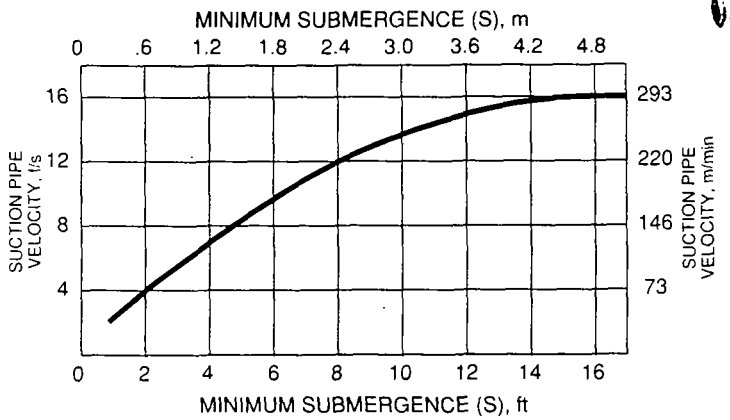

It is usually recommended that a bypass line be installed from the casing Tap III (See Figure 65) to the seal chamber or the gland. The purpose of this line is to keep the seal faces wet during the priming cycle.

When possible, it is recommended that the suction piping be sloped slightly downward to the casing suction flange. This will ensure that no priming fluid is lost down the suction line while the pump is priming.

6.3 SPARE PARTS

The parts diagram is the same as the MARK III standard pump with the exception of the special casing. The pump shown below is a Group 2. Refer to Figure 52 to see a Group 1 pump, or to see the duplex angular contact bearing option.

FIGURE 69

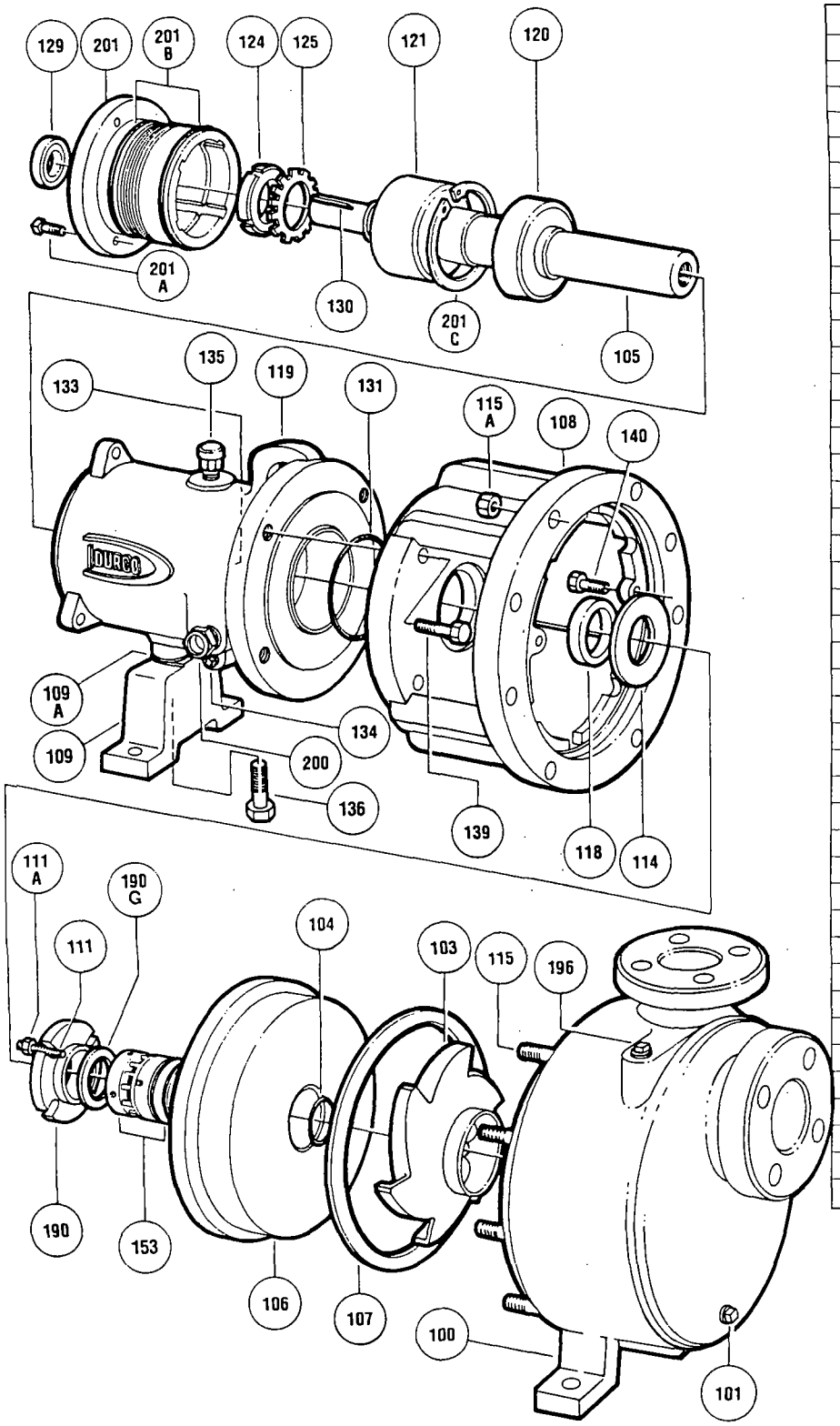

ITEM	DESCRIPTION	
100	CASING	
103	IMPELLER	
104	IMPELLER GASKET	
105	SHAFT	
106	REAR COVER PLATE	
107	REAR COVER GASKET	
108	BEARING HOUSING ADAPTER*	
109	BEARING HOUSING FOOT	
109A	SHIM	
110	GLAND - PACKING	OPT.
111	STUD - GLAND	
111A	HEXNUT - GLAND	
112	PACKING SEAL CAGE HALVES	OPT.
113	PACKING	OPT.
114	DEFLECTOR INBOARD	OPT.
115	STUD - CASING	
115A	HEXNUT - CASING	
118	OIL SEAL INBOARD	
119	BEARING HOUSING	
120	BEARING INBOARD	
121	BEARING OUTBOARD	
122	OIL SLINGER	OPT.
124	LOCKNUT - BEARING	
125	LOCKWASHER - BEARING	
129	OIL SEAL OUTBOARD	
130	KEY - SHAFT/COUPLING	
131	O-RING - ADAPTER*	
133	TRICO OILER (Not Shown)	
134	BEARING HOUSING DRAIN PLUG	
135	BEARING HOUSING VENT PLUG	
136	CAPSCREW - FOOT	
139	CAPSCREW - BEARING HOUSING*	
140	CAPSCREW - COVER/ADAPTER	
153	MECHANICAL SEAL	
177	HOOK SLEEVE	OPT.
190	GLAND - MECHANICAL SEAL	
190G	GLAND GASKET	
200	SIGHT GAGE - BEARING HOUSING	
201	BEARING CARRIER	
201A	SET SCREW - BEARING CARRIER	
201B	O-RING - BEARING CARRIER	
201C	BEARING CARRIER RETAINER	
201D	CLAMP RING BEARING HOUSING	OPT.
201E	SOC-CAPSCREW CLAMP	OPT.

*GROUP 2 ONLY

7.2 SETTING THE IMPELLER

The impeller is set off of the rear cover plate, just like the reverse vane impeller on the MARK III standard pump. Refer to Appendix D for instructions on setting the impeller.

7.3 SPARE PARTS

The parts diagram is the same as the MARK III standard pump with the exception of the casing and impeller. The pump shown below is a Group 2. Refer to Figure 52 to see a Group 1 pump, or to see the duplex angular contact bearing option.

FIGURE 70

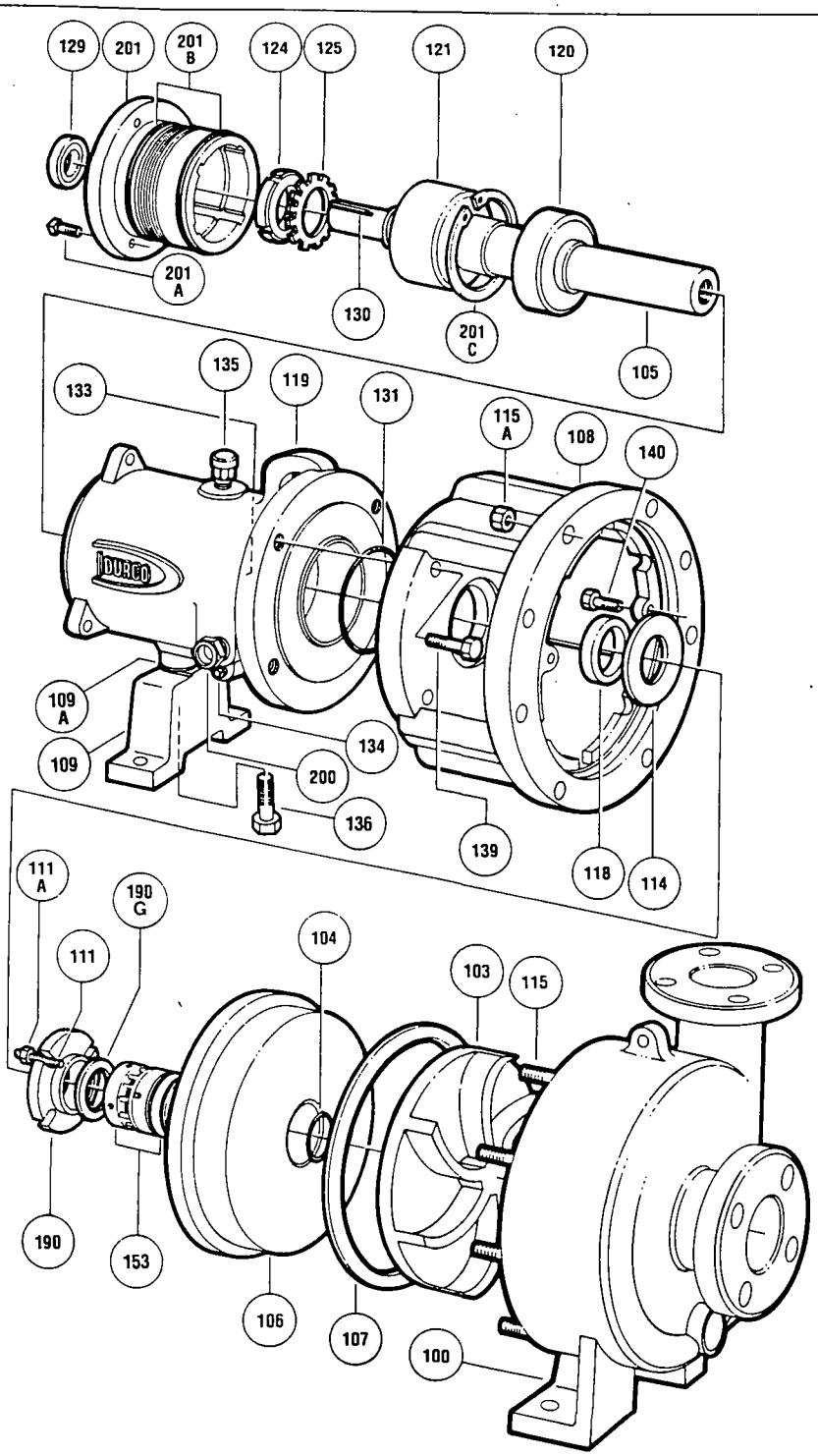

ITEM	DESCRIPTION	
100	CASING	
103	IMPELLER	
104	IMPELLER GASKET	
105	SHAFT	
106	REAR COVER PLATE	
107	REAR COVER GASKET	
108	BEARING HOUSING ADAPTER*	
109	BEARING HOUSING FOOT	
109A	SHIM	
110	GLAND - PACKING	OPT.
111	STUD - GLAND	
111A	HEXNUT - GLAND	
112	PACKING SEAL CAGE HALVES	OPT.
113	PACKING	OPT.
114	DEFLECTOR INBOARD	OPT.
115	STUD - CASING	
115A	HEXNUT - CASING	
118	OIL SEAL INBOARD	
119	BEARING HOUSING	
120	BEARING INBOARD	
121	BEARING OUTBOARD	
122	OIL SLINGER	OPT.
124	LOCKNUT - BEARING	
125	LOCKWASHER - BEARING	
129	OIL SEAL OUTBOARD	
130	KEY - SHAFT/COUPLING	
131	O-RING - ADAPTER*	
133	TRICO OILER (Not Shown)	
134	BEARING HOUSING DRAIN PLUG	
135	BEARING HOUSING VENT PLUG	
136	CAPSCREW - FOOT	
139	CAPSCREW - BEARING HOUSING*	
140	CAPSCREW - COVER/ADAPTER	
153	MECHANICAL SEAL	
177	HOOK SLEEVE	OPT.
190	GLAND - MECHANICAL SEAL	
190G	GLAND GASKET	
200	SIGHT GAGE - BEARING HOUSING	
201	BEARING CARRIER	
201A	SET SCREW - BEARING CARRIER	
201B	O-RING - BEARING CARRIER	
201C	BEARING CARRIER RETAINER	
201D	CLAMP RING BEARING HOUSING	OPT.
201E	SOC-CAPSCREW CLAMP	OPT.

*GROUP 2 ONLY

7.0 MARK III RECESSED IMPELLER PUMP

7.1 GENERAL DESCRIPTION OF THE PUMP

The Recessed Impeller is an open-vane design that has the shroud attached to the rear of the vanes. The impeller is located a distance of two inches or so from the suction face of the casing. When the impeller spins, it sets up a vortex within the casing. This swirling liquid is fed from the center via the suction nozzle and exits tangentially from the vortex through the discharge nozzle.

Very little of any solids that may be contained in the liquid actually touch the impeller. Rather, they are swept up in the swirling motion and conducted in direct fashion to the discharge nozzle. The discharge nozzle is placed at a tangent to the swirling flow so that the fluid flows smoothly out of the pump. Top, center-line discharge is not desirable as the extra bends in the discharge nozzle necessary to locate the flange in the center would disrupt the flow and increase the possibility of wearing out the casing.

Except for the impeller and casing, all other parts are identical to the standard MARK III pump.

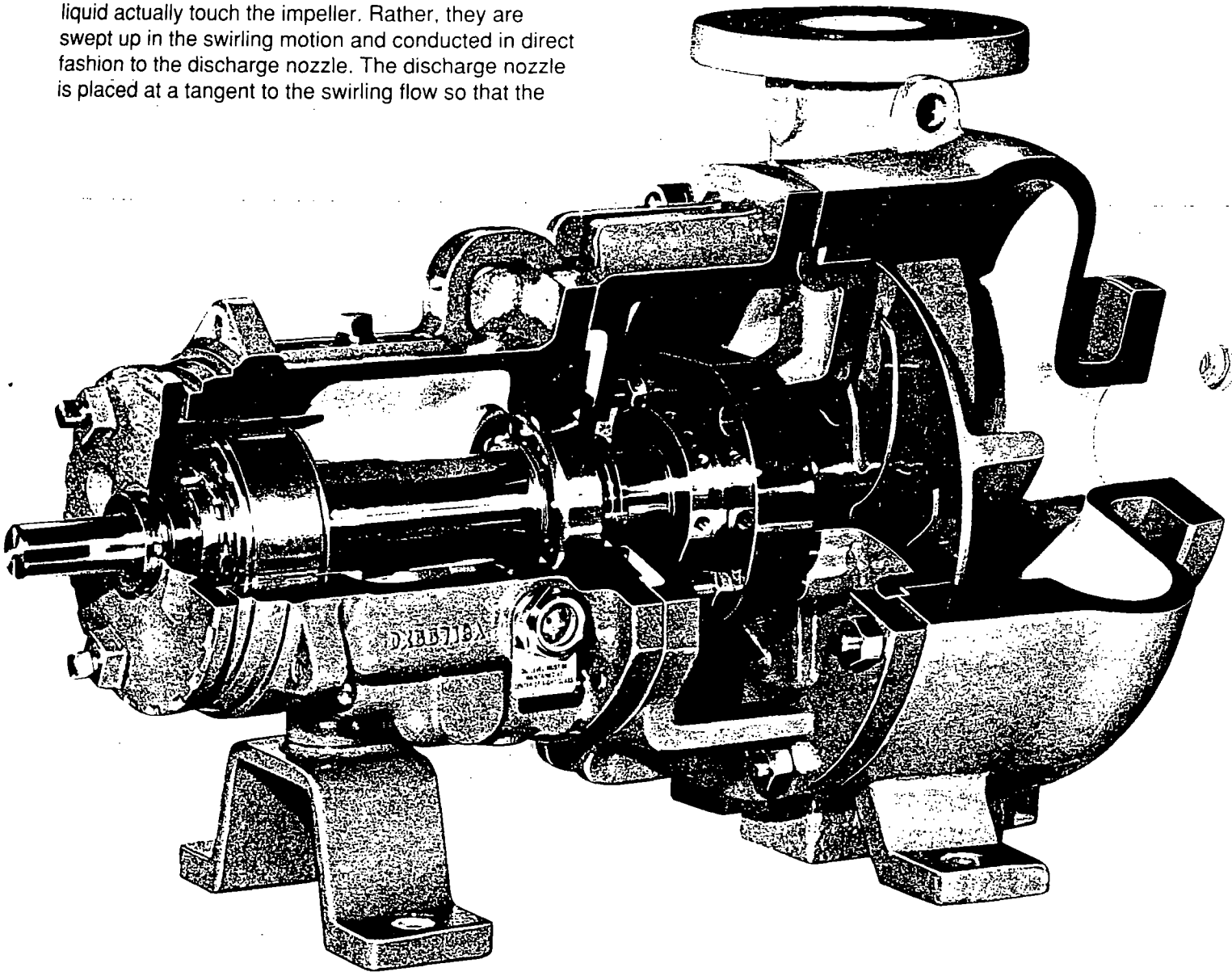

7.2 SETTING THE IMPELLER

The impeller is set off of the rear cover plate, just like the reverse vane impeller on the MARK III standard pump. Refer to Appendix D for instructions on setting the impeller.

7.3 SPARE PARTS

The parts diagram is the same as the MARK III standard pump with the exception of the casing and impeller. The pump shown below is a Group 2. Refer to Figure 52 to see a Group 1 pump, or to see the duplex angular contact bearing option.

FIGURE 70

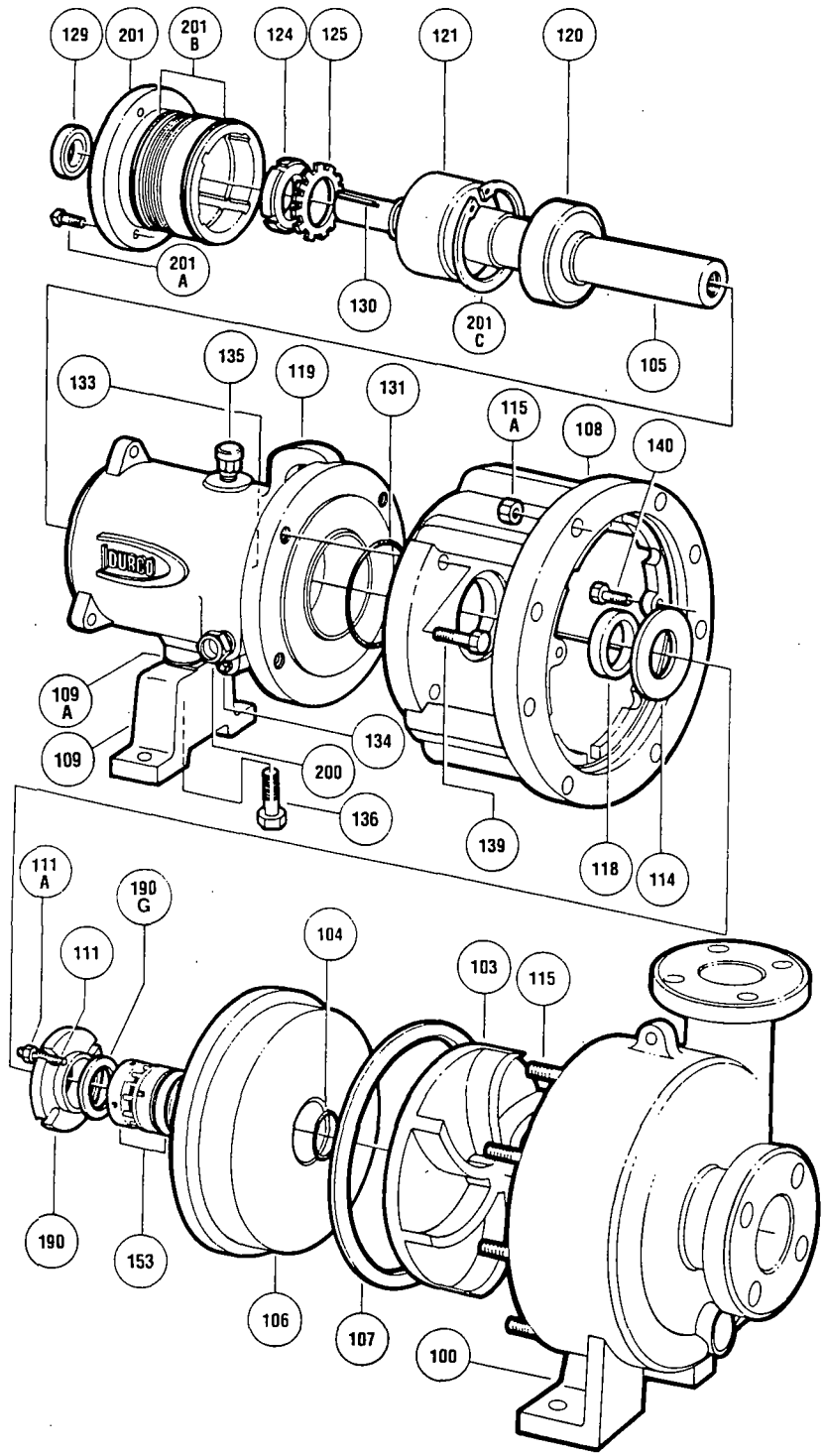

ITEM	DESCRIPTION	
100	CASING	
103	IMPELLER	
104	IMPELLER GASKET	
105	SHAFT	
106	REAR COVER PLATE	
107	REAR COVER GASKET	
108	BEARING HOUSING ADAPTER*	
109	BEARING HOUSING FOOT	
109A	SHIM	
110	GLAND - PACKING	OPT.
111	STUD - GLAND	
111A	HEXNUT - GLAND	
112	PACKING SEAL CAGE HALVES	OPT.
113	PACKING	OPT.
114	DEFLECTOR INBOARD	OPT.
115	STUD - CASING	
115A	HEXNUT - CASING	
118	OIL SEAL INBOARD	
119	BEARING HOUSING	
120	BEARING INBOARD	
121	BEARING OUTBOARD	
122	OIL SLINGER	OPT.
124	LOCKNUT - BEARING	
125	LOCKWASHER - BEARING	
129	OIL SEAL OUTBOARD	
130	KEY - SHAFT/COUPLING	
131	O-RING - ADAPTER*	
133	TRICO OILER (Not Shown)	
134	BEARING HOUSING DRAIN PLUG	
135	BEARING HOUSING VENT PLUG	
136	CAPSCREW - FOOT	
139	CAPSCREW - BEARING HOUSING*	
140	CAPSCREW - COVER/ADAPTER	
153	MECHANICAL SEAL	
177	HOOK SLEEVE	OPT.
190	GLAND - MECHANICAL SEAL	
190G	GLAND GASKET	
200	SIGHT GAGE - BEARING HOUSING	
201	BEARING CARRIER	
201A	SET SCREW - BEARING CARRIER	
201B	O-RING - BEARING CARRIER	
201C	BEARING CARRIER RETAINER	
201D	CLAMP RING BEARING HOUSING	OPT.
201E	SOC-CAPSCREW CLAMP	OPT.

*GROUP 2 ONLY

8.0 MARK III LO-FLO PUMP

8.1 GENERAL DESCRIPTION OF THE PUMP

The Durco MARK III Lo-Flo Pump has a special design casing and impeller which allows it to work very reliably at low flows. The pump has an impeller with radial vanes that twist around the hub, and a circular, concentric casing. This design ensures that, at low flows, no significant hydraulic radial forces are transmitted to the shaft. Minimum flow on this pump is "Minimum Thermal Flow". This is defined as the minimum flow that will not cause an excessive temperature rise.

⚠WARNING

Do not operate the Lo-Flo pump below Minimum Thermal Flow, as this could cause an excessive temperature rise. Contact your Durco Sales Engineer for determination of Minimum Thermal flow.

Only the impeller and casing are special, all other parts are standard MARK III parts. ***Note:*** The adapter on the 13 in pump is the standard adapter but with 16 holes drilled in it for attachment to the casing.

8.2 SETTING THE IMPELLER

The impeller for his pump is set off the casing, just like the standard front vane open style impeller. Refer to Appendix E for instructions on how to install, remove, and set this impeller.

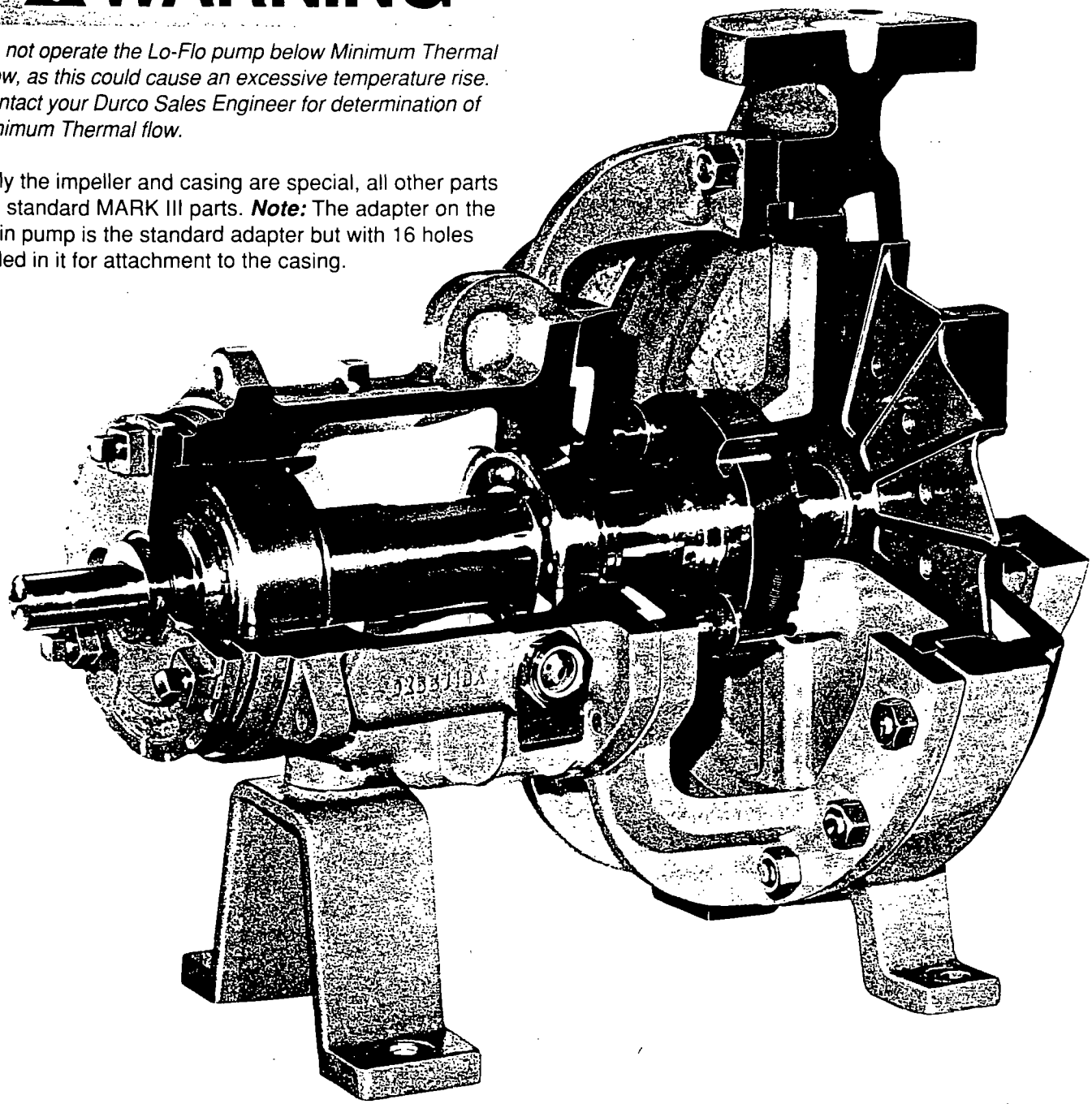

8.3 SPARE PARTS

The parts diagram is the same as the MARK III standard pump with the exception of the casing and impeller. The pump shown below is a Group 2. Refer to Figure 52 to see a Group 1 pump, or to see the duplex angular contact bearing option.

FIGURE 71

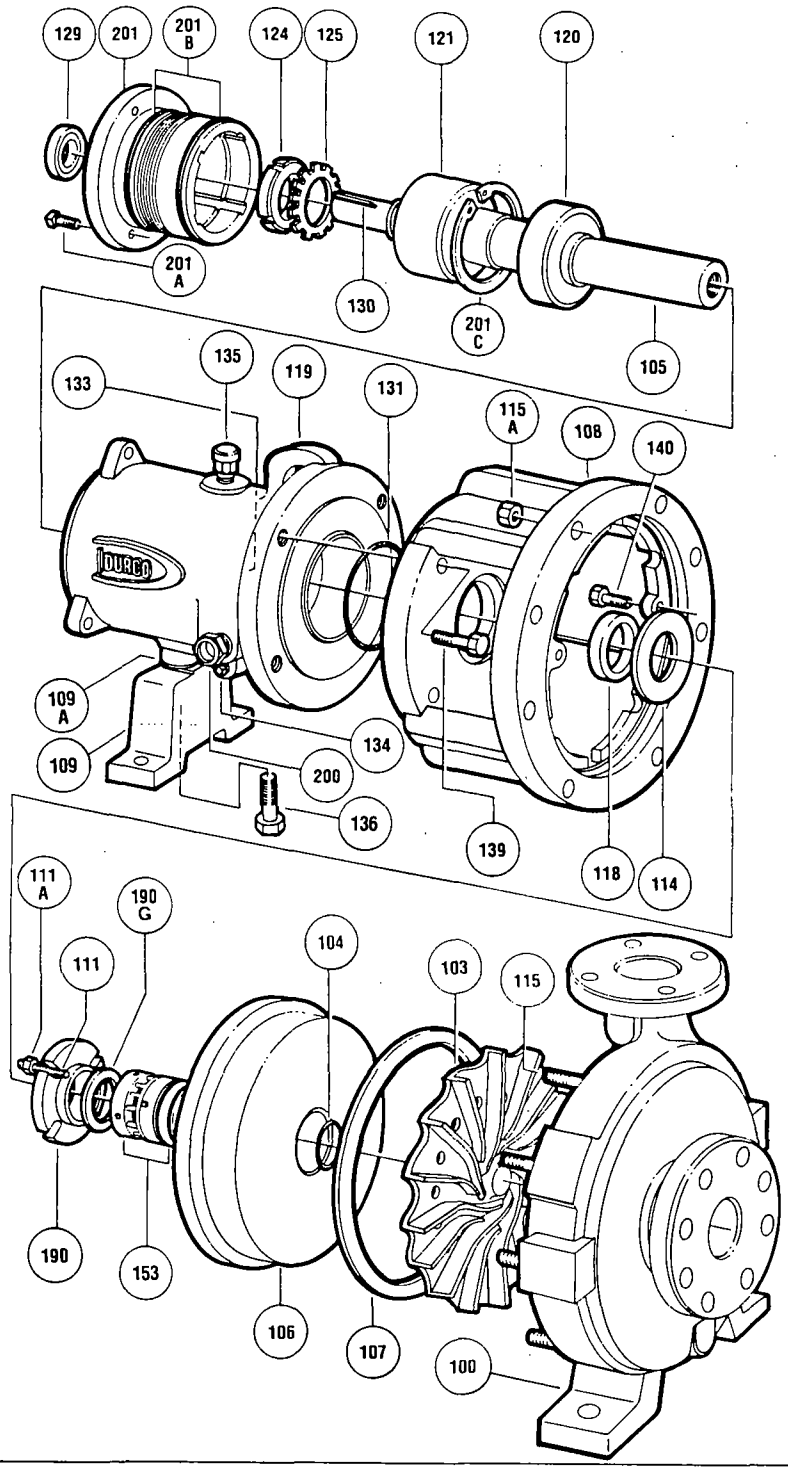

ITEM	DESCRIPTION	
100	CASING	
103	IMPELLER	
104	IMPELLER GASKET	
105	SHAFT	
106	REAR COVER PLATE	
107	REAR COVER GASKET	
108	BEARING HOUSING ADAPTER*	
109	BEARING HOUSING FOOT	
109A	SHIM	
110	GLAND - PACKING	OPT.
111	STUD - GLAND	
111A	HEXNUT - GLAND	
112	PACKING SEAL CAGE HALVES	OPT.
113	PACKING	OPT.
114	DEFLECTOR INBOARD	OPT.
115	STUD - CASING	
115A	HEXNUT - CASING	
118	OIL SEAL INBOARD	
119	BEARING HOUSING	
120	BEARING INBOARD	
121	BEARING OUTBOARD	
122	OIL SLINGER	OPT.
124	LOCKNUT - BEARING	
125	LOCKWASHER - BEARING	
129	OIL SEAL OUTBOARD	
130	KEY - SHAFT/COUPLING	
131	O-RING - ADAPTER*	
133	TRICO OILER (Not Shown)	
134	BEARING HOUSING DRAIN PLUG	
135	BEARING HOUSING VENT PLUG	
136	CAPSCREW - FOOT	
139	CAPSCREW - BEARING HOUSING*	
140	CAPSCREW - COVER/ADAPTER	
153	MECHANICAL SEAL	
177	HOOK SLEEVE	OPT.
190	GLAND - MECHANICAL SEAL	
190G	GLAND GASKET	
200	SIGHT GAGE - BEARING HOUSING	
201	BEARING CARRIER	
201A	SET SCREW - BEARING CARRIER	
201B	O-RING - BEARING CARRIER	
201C	BEARING CARRIER RETAINER	
201D	CLAMP RING BEARING HOUSING	OPT.
201E	SOC-CAPSCREW CLAMP	OPT.

* GROUP 2 ONLY

APPENDIX A

IOM FOR C-FLANGE MOTOR ADAPTERS

INTRODUCTION

1.1 C-flange motor adapters provide a means of obtaining pump to motor alignment. A C-flange type motor is mounted on the pump bearing housing with the use of an intermediate adapter. Alignment is achieved through the use of machined locating and piloting surfaces on the bearing housing and adapter. Care should be taken to ensure these surfaces are kept free from handling damage defects or dirt which will affect alignment. The drawings at the end of this bulletin show typical cross-sectional views of MARK III Group I and II pumps with the C-flange adapter option. Group III pumps are not available with this option.

1.2 Motors used may range from 182TC frames to 405TSC. Motors 324TSC to 405TSC (inclusive) must be short shaft (TSC) type. Motors from 182TC to 286TC (inclusive) may be either standard (TC) or short shaft (TSC) type. Motor frames smaller than 182TC can not be accommodated.

PUMP INSTALLATION

2.1 Refer to standard pump foundation discussion for installation of grouted and stilt mounted baseplates. It may be necessary to remove the pump from the baseplate to access the grout hole.

2.2 Refer to standard pump piping discussion for piping recommendations.

2.3 Temporary supports (installed for shipping only) should be removed from under the motor.

2.4 It is necessary to wire the electric motor with a flexible conduit of sufficient length to allow the motor/power end assembly to be moved back from the casing for maintenance.

⚠ CAUTION

It is absolutely essential that the motor rotation be checked before connecting the shaft coupling. Incorrect rotation of the pump for even a short time can unscrew and damage the impeller, casing and shaft. The pump must turn clockwise when viewed from the motor end.

The coupling sleeve has been purposely left out to aid in checking motor rotation without endangering the pump.

2.5 Alignment between the pump shaft and motor shaft is built-in by the precise machining of the parts that position these shafts. Parallel alignment of 0.007 in (0.18 mm) and angular alignment of 0.002 in/in (0.002 mm/mm) can be expected. If a more refined alignment is desired, it can be accomplished by use of our "C-Plus" optional alignment feature, described in Section 3. If desired, alignment may be checked with indicators as shown:

FIGURE A-1

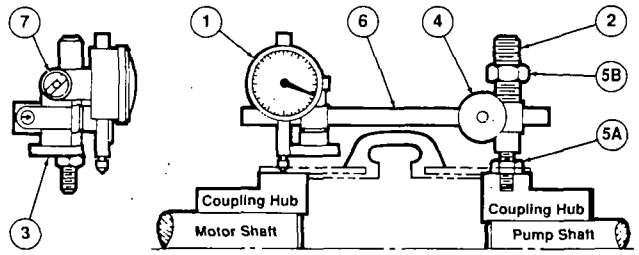

Item	Reqd.	Matl.	Description
1	1	–	Miniature Indicator, Lug Back Starrett *80-144J
2	1	SR	3/8 dia x 2-1/2 post with 1/4-20 x 5/8 thd. & 3/8-16x3/4 thd.
3	1	SR	1/4 x 1/4 Starrett *657S Sleeve
4	1	SR	3/8 x 1/4 Starrett *196L Sleeve
5A	1	SR	1/4-20 Hex nut
5B	1	SR	3/8-16 Hex nut
6	1	SR	1/4 dia x 5 rod
7	1	SR	Indicator attachment, Starrett *657Y

a. Install one half of the Rexnord Omega coupling sleeve.
b. Mount post (2) into an unused hole in the coupling hub and lock in place with hex nut (5).
c. Assemble the rest of the indicator as shown with the indicator in contact with the other coupling hub.
d. Zero the indicator.
e. Rotate the entire assembly 360 degrees. Note the indicator readings as you rotate the shaft. Both shafts will rotate together.
f. The shaft to shaft parallel misalignment should be within 0.007 in (0.18 mm) FIM.
g. It is necessary to be aware of the affects of "indicator sag" and to take them into account when making measurements.

2.6 The indicator kit should be removed. The coupling sleeve should be installed using the capscrews provided by Rexnord for that purpose. Observe and follow the torque instructions provided by Rexnord.

⚠ WARNING

Failure to secure capscrews properly could cause coupling component(s) to become dislodged during operation resulting in personal injury.

2.7 Install coupling guards (#402).

C-PLUS ALIGNMENT FEATURE

3.1 If the C-Plus alignment feature is desired the spacer ring must be installed before the motor is assembled. The drawing below shows the components of the C-Plus feature.

FIGURE A-2

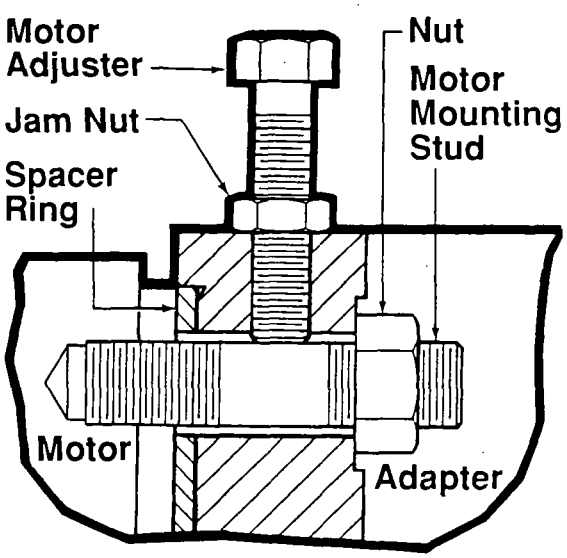

3.1.1 With the C-Plus alignment feature and the indicator kit in place, alignment is changed by moving the motor radially using the four adjustment screws. Adjusting screws are located to push on four of the motor mounting studs as shown in Figure A-2.

3.2 The motor mounting screws must be snug but not tight when attempting to adjust motor location. Depending on the size of motor it may be necessary to check the alignment with the motor fasteners tight. Corrections may be made until 0.002 in (0.05 mm) FIM (or the desired) alignment is achieved. The adjusters, adjuster jam nuts and the motor fasteners should all be tightened.

3.3 The indicator kit should be removed, the coupling and coupling guard installed as described in paragraphs 2.6 and 2.7.

RETROFIT OF EXISTING PUMPS

4.1 Any pump to be retrofitted with the C-flange motor adapter must have machined motor adapter piloting and locating surfaces on the bearing housing. The baseplate must be drilled for the motor adapter.

4.2 Referring to the cross section drawing, mount motor adapter (#400) with adjustable foot (#401) installed onto the bearing housing using three hex cap screws (#403). Loosely install motor adapter mounting fasteners (#405A) along with any necessary mounting blocks. Remove the bearing housing foot (#109) and related hardware.

4.2 Level the pump shaft by adjusting the foot height. Hold a bubble level axially on the pump shaft extension or on the top of the discharge flange, and rotate hex foot adjuster (#401) until the pump is level and parallel with the baseplate.

4.2.1 A soft foot is to be avoided at the casing and the motor adapter feet. Check for any gap with a feeler gage. If the feeler gage indicates a gap, slight adjustment of the hex foot adjusters and/or tapping down on the discharge flange with a soft mallet should correct this condition. Tighten the four pump to baseplate fasteners and tighten the adjuster locking set screws (#401A).

4.3 Proceed to step 2.4.

MARK III – 1K PROCESS PUMP "C" FACE ADAPTER CROSS SECTIONAL PARTS LIST

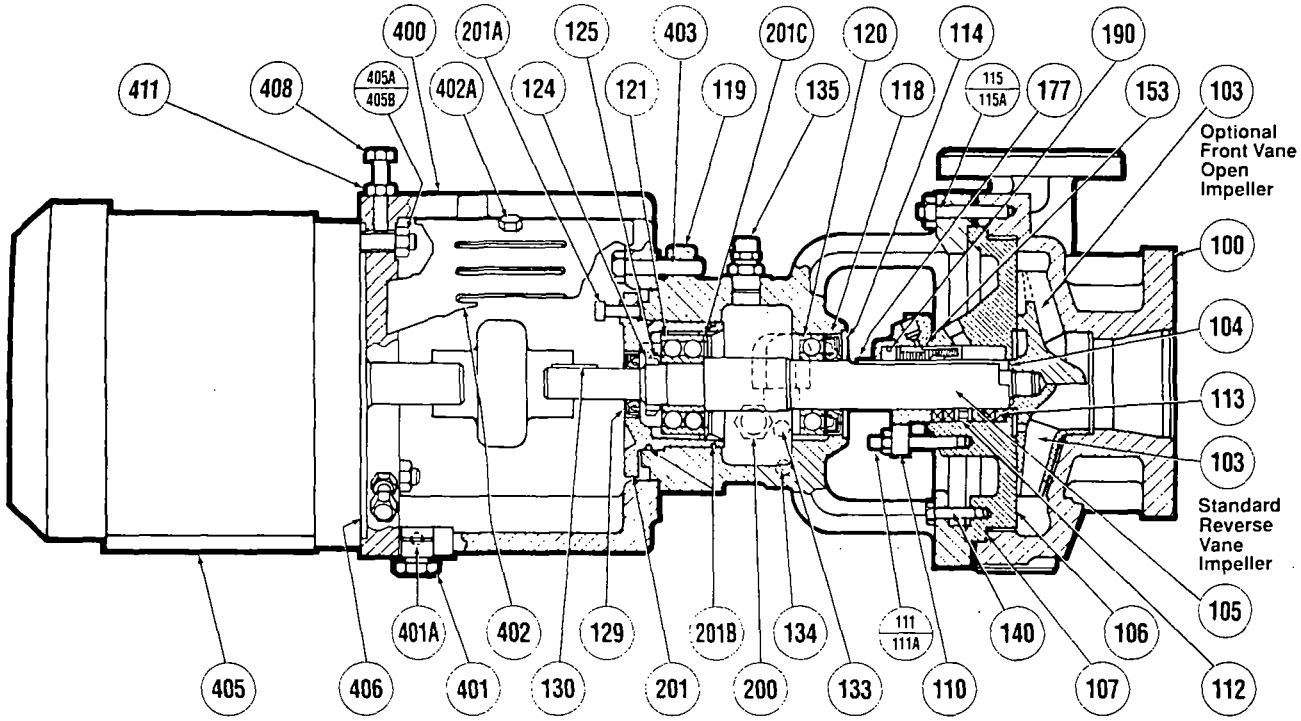

ITEM	DESCRIPTION
100	CASING
103	IMPELLER
104	GASKET, IMPELLER
105	SHAFT
106	COVER PLATE
107	GASKET, COVER
110	GLAND
111	STUD, GLAND
111A	HEXNUT, GLAND
112	SEAL CAGE HALVE
113	PACKING
114	DEFLECTOR I.L.B.
115	STUD, CASING
115A	HEXNUT, CASING
118	OIL SEAL I.B.
119	HOUSING, BEARING

ITEM	DESCRIPTION
120	BEARING I.B.
121	BEARING O.B.
124	LOCKNUT, BEARING
125	LOCKWASHER, BEARING
129	OIL SEAL O.B.
130	KEY SHAFT/CPLG
133	OILER, TRICO
134	PLUG, DRAIN
135	PLUG, VENT
140	CAPSCREW, CVR-HSG
153	SEAL, STUFF BOX
177	SLEEVE, HOOK
190	FLANGE, FOLLOWER
200	SIGHT GLASS
201	CARRIER, BEARING
201A	SET SCREW

ITEM	DESCRIPTION
201B	O-RING
201C	RING, SNAP
400	ADAPTER, C-FACE
401	FOOT, ADJUSTABLE
401A	SET SCREW
402	GUARD, COUPLING
402A	SCREW, HEX HEAD
403	SCREW, HEX HEAD
* 405	MOTOR
405A	STUD, MOTOR
405B	HEXNUT, MOTOR
406	RING SPACER
408	ADJUSTER SCREW
411	ADJUSTER JAM NUT

* USE C-FACE MOTOR WITH FEET

MARK III – 2K PROCESS PUMP "C" FACE ADAPTER (182TC to256TC Motors) CROSS SECTIONAL PARTS LIST

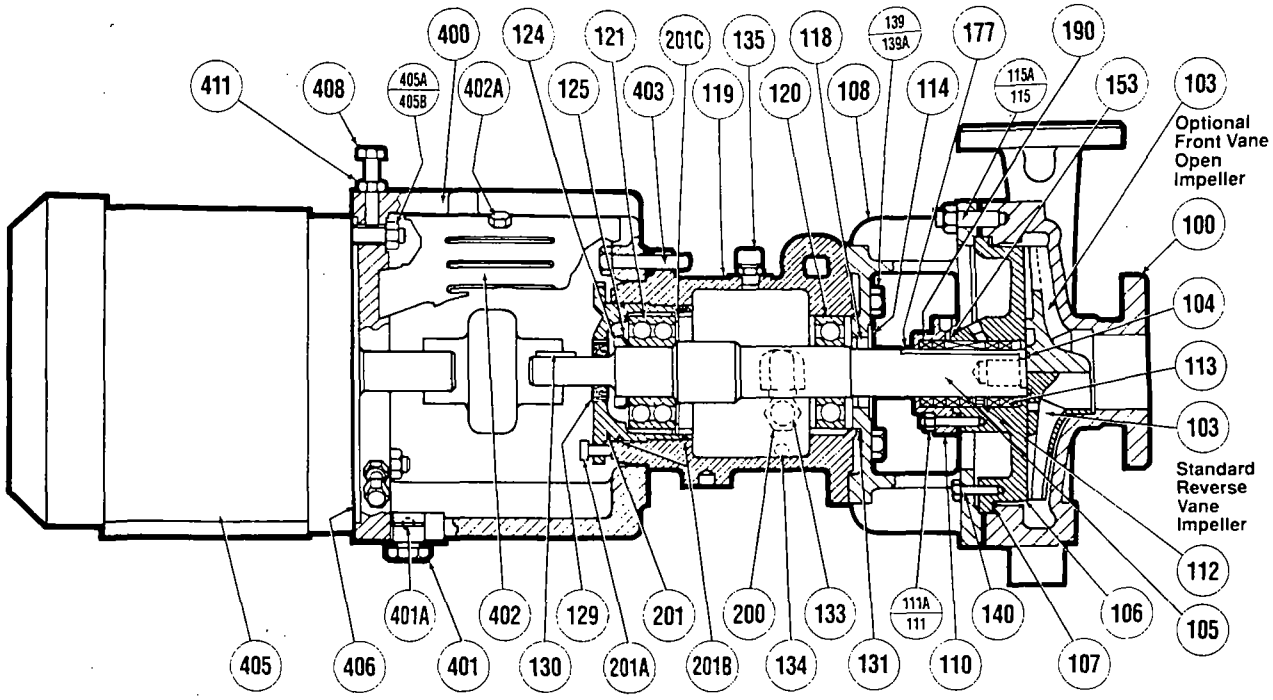

ITEM	DESCRIPTION
100	CASING
103	IMPELLER
104	GASKET. IMPELLER
105	SHAFT
106	COVER PLATE
107	GASKET. COVER
108	ADAPTER. BRG-HSG
110	GLAND
111	STUD. GLAND
111A	HEXNUT. GLAND
112	SEAL CAGE HALVE
113	PACKING
114	DEFLECTOR IL.B.
115	STUD. CASING
115A	HEXNUT. CASING
118	OIL SEAL I.B.
119	HOUSING. BEARING

ITEM	DESCRIPTION
120	BEARING I.B.
121	BEARING O.B.
124	LOCKNUT. BEARING
125	LOCKWASHER. BEARING
129	OIL SEAL O.B.
130	KEY SHAFT/CPLG
131	O-RING. ADAPTER
133	OILER. TRICO
134	PLUG. DRAIN
135	PLUG. VENT
139	CAPSCREW. ADAPTER
139A	HEXNUT. BRG HSG
140	CAPSCREW. CVR-ADTR
153	SEAL - MECHANICAL
177	SLEEVE
190	FLANGE. FOLLOWER
200	SIGHT GLASS

	ITEM	DESCRIPTION
	201	CARRIER. BEARING
	201A	SET SCREW
	201B	O-RING
	201C	RING. SNAP
	400	ADAPTER. C-FACE
	401	FOOT. ADJUSTABLE
	401A	SET SCREW
	402	GUARD. COUPLING
	402A	SCREW. HEX HEAD
	403	SCREW. HEX HEAD
*	405	MOTOR
	405A	STUD. MOTOR
	405B	HEXNUT. MOTOR
	406	RING SPACER
	408	ADJUSTER SCREW
	411	ADJUSTER JAM NUT

* USE C-FACE MOTOR WITH FEET

MARK III – 2K PROCESS PUMP "C" FACE ADAPTER (284TC & Larger Motors) CROSS SECTIONAL PARTS LIST

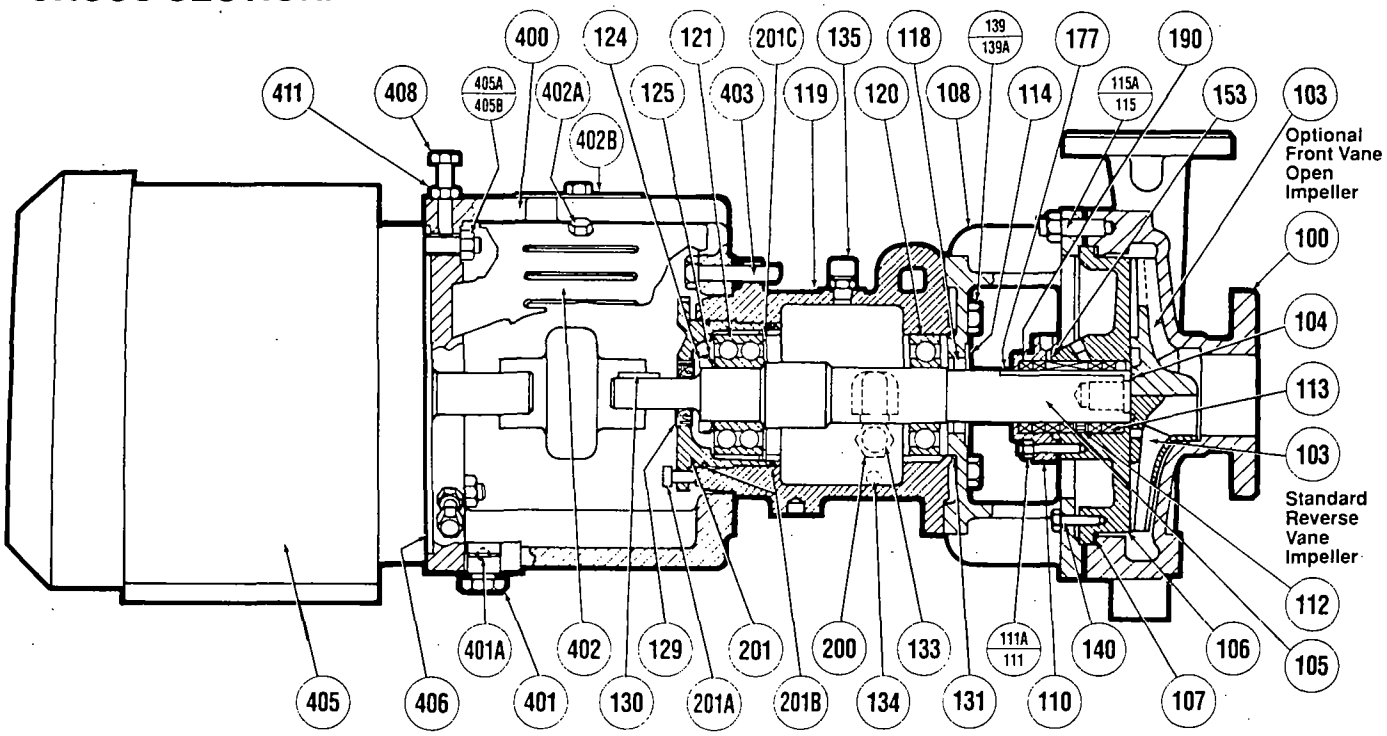

ITEM	DESCRIPTION
100	CASING
103	IMPELLER
104	GASKET. IMPELLER
105	SHAFT
106	COVER PLATE
107	GASKET. COVER
108	ADAPTER. BRG-HSG
110	GLAND
111	STUD. GLAND
111A	HEXNUT. GLAND
112	SEAL CAGE HALVE
113	PACKING
114	DEFLECTOR I.L.B.
115	STUD. CASING
115A	HEXNUT. CASING
118	OIL SEAL I.B.
119	HOUSING. BEARING

ITEM	DESCRIPTION
120	BEARING I.B.
121	BEARING O.B.
124	LOCKNUT. BEARING
125	LOCKWASHER. BEARING
129	OIL SEAL O.B.
130	KEY SHAFT/CPLG
131	O-RING. ADAPTER
133	OILER. TRICO
134	PLUG. DRAIN
135	PLUG. VENT
139	CAPSCREW. ADAPTER
139A	HEXNUT. BRG HSG
140	CAPSCREW. CVR-ADTR
153	SEAL - MECHANICAL
177	SLEEVE
190	FLANGE. FOLLOWER
200	SIGHT GLASS

ITEM	DESCRIPTION
201	CARRIER. BEARING
201A	SET SCREW
201B	O-RING
201C	RING. SNAP
400	ADAPTER. C-FACE
401	FOOT. ADJUSTABLE
401A	SET SCREW
402	GUARD. COUPLING
402A	SCREW. HEX HEAD
403	SCREW. HEX HEAD
* 405	MOTOR
405A	STUD. MOTOR
405B	HEXNUT. MOTOR
406	RING SPACER
408	ADJUSTER SCREW
411	ADJUSTER JAM NUT

* USE C-FACE MOTOR WITH FEET

APPENDIX B

ASSEMBLY OF STILT AND SPRING MOUNTED BASEPLATES

Durco offers stilt and spring mounted baseplates. (See Figure B-1 for stilt mounted option.) General instructions for assembling these baseplates are given below. For dimensional information, please refer to the appropriate Durco "Sales Print."

FIGURE B-1

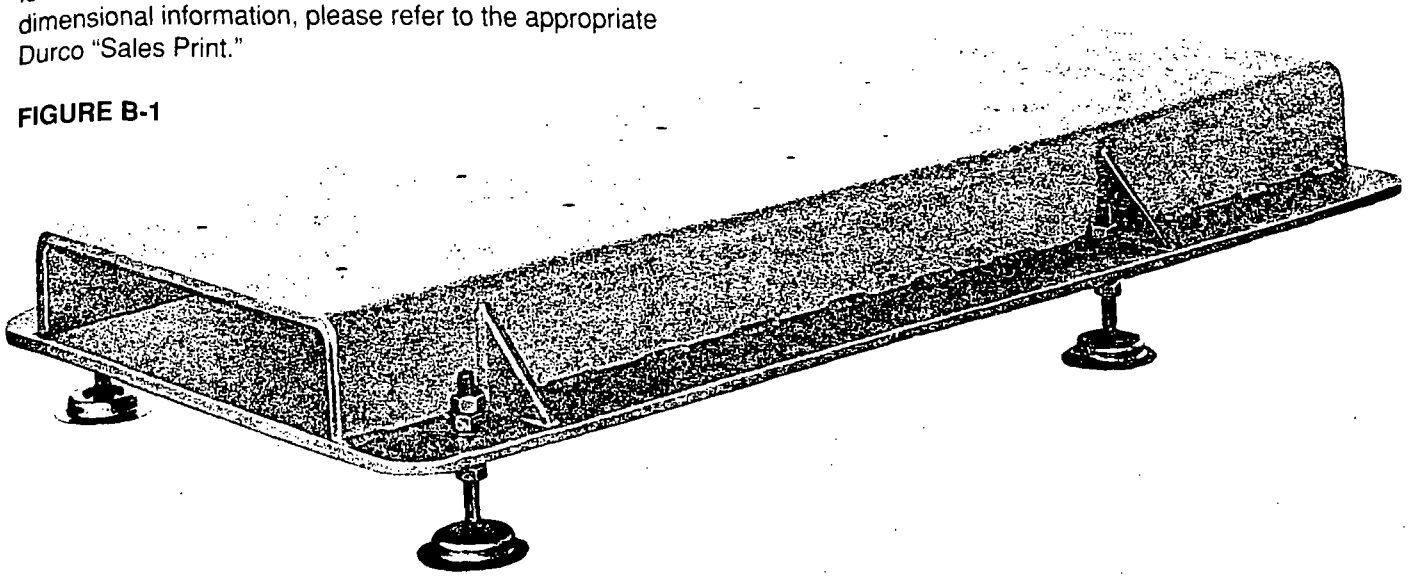

FIGURE B-2

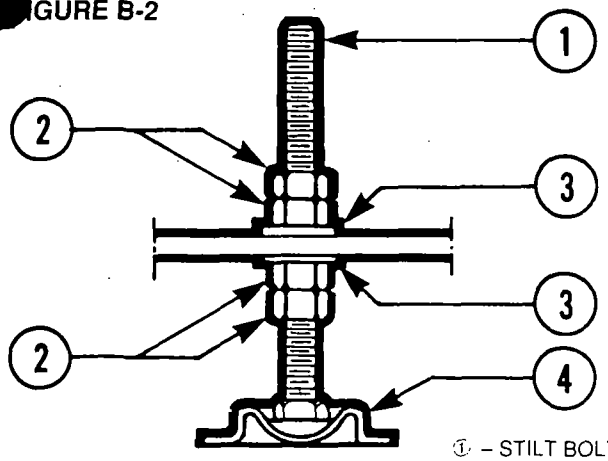

① – STILT BOLT
② – NUTS
③ – LOCK WASHER
④ – FLOOR CUP

STILT MOUNTED BASEPLATE ASSEMBLY INSTRUCTIONS

Refer to Figure B-2

1. Raise or block up baseplate/pump above the floor to allow for the assembly of the stilts.
2. Predetermine or measure the approximate desired height for the baseplate above the floor.
3. Set the bottom nuts (Item ②) above the stilt bolt head (Item ①) to the desired height.
4. Assemble lock washer (Item ③) down over the stilt bolt.
5. Assemble the stilt bolt up through hole in the bottom plate and hold in place.
6. Assemble the lock washer (Item ③) and nut (Item ②) on the stilt bolt. Tighten the nut down on the lock washer.
7. After all four stilts have been assembled, position the baseplate in place, over the floor cups (Item ④) under each stilt location, and lower the baseplate to the floor.
8. Level and make final height adjustments to the suction and discharge pipe by first loosening the top nuts and turning the bottom nuts to raise or lower the baseplate.
9. Tighten the top and bottom nuts at the lock washer (Item ③) first then tighten the other nuts.
10. It should be noted that the connecting pipe lines must be individually supported, and that the stilt mounted baseplate is not intended to support total static pipe load.

FIGURE B-3

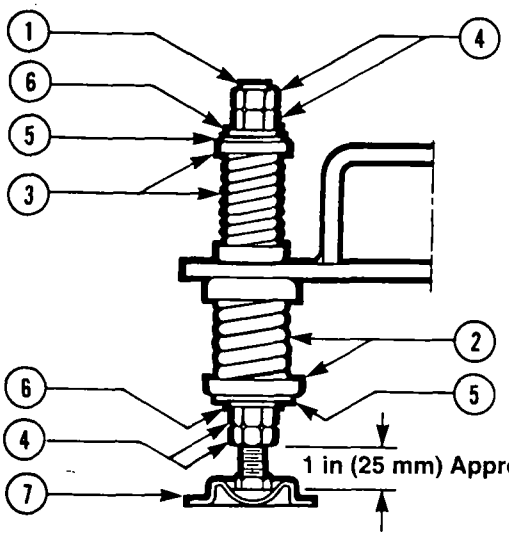

① – STILT BOLT
② – BOTTOM SPRING
(3¼ in (83 mm) OD X 4 in (102 mm) FL/CUPS)
③ – TOP SPRING
(2 in (51 mm) OD X 4 in (102 mm) FL/CUPS)
④ – NUTS
⑤ – FLAT WASHER
⑥ – LOCK WASHER
⑦ – FLOOR CUP

STILT/SPRING MOUNTED BASEPLATE ASSEMBLY INSTRUCTIONS

Refer to Figure B-3

1. Raise or block up baseplate/pump above the floor to allow for the assembly of the stilts.
2. Set the bottom nuts (Item ④) above the stilt bolt head (Item ①) this allows for 2 in (51 mm) upward movement for the final height adjustment of the suction/ discharge flange.
3. Assemble the lock washer (Item ⑥) flat washer (Item ⑤) and bottom spring/cup assembly (Item ②) down over the stilt bolt (Item ①).
4. Assemble the stilt bolt/bottom spring up through hole in the bottom plate and hold in place.
5. Assemble top spring/cup assembly (Item ③) down over stilt bolt.
6. Assemble flat washer (Item ⑤), lock washer (Item ⑥) and nuts (Item ④) on the stilt bolt.
7. Tighten down top nuts, compressing the top spring approximately 1 in (25 mm).
8. After all four stilts have been assembled, position the baseplate in place, over the floor cups (Item ⑦) under each stilt location, and lower the baseplate down to the floor.
9. Level and make final height adjustments to the suction and discharge pipe by first loosening the top nuts, and turning the bottom nuts to raise or lower the baseplate.
10. To make the stilt bolts more stable, tighten down on the top nuts, compressing the top spring approximately 1 in (25 mm), and lock the nuts in place.
11. It should be noted that the connecting pipe lines must be individually support, and that the spring mounted baseplate is not intended to support total static pipe loads.

APPENDIX C

CRITICAL MEASUREMENTS AND TOLERANCES FOR MAXIMIZING MTBPM

PARAMETERS THAT SHOULD BE CHECKED BY USERS

We recommend that the user check the following measurements and tolerances whenever pump maintenance is performed. Each of these measurements is described in more detail on the following pages.

Topic	ASME B73.1M Std. in (mm)	Suggested By Major Seal Vendors in (mm)	Suggested And/Or Provided By Durco in (mm)
Shaft			
Diameter tolerance, under bearings	N.S.		0.0002 (0.005)
Impeller			
Balance			See Note 1
Bearing Housing			
Diameter (ID) tolerance at bearings	N.S.		0.0005 (0.013)
Power End Assembly			
Shaft Runout	0.002 (0.05)	0.001 (0.03)	0.001 (0.03)
Shaft Sleeve Runout	0.002 (0.05)	0.002 (0.05)	0.002 (0.05)
Radial Deflection - Static	N.S.	0.003 (0.076)	0.002 (0.05)
Shaft Endplay	N.S.	0.002 (0.05)	0.001 (0.03)
Seal Chamber			
Face Squareness to Shaft	0.003 (0.08)	0.001 (0.03)	0.003 (0.08)
Register Concentricity	0.005 (0.13)	0.005 (0.13)	0.005 (0.13)
Complete Pump			
Shaft movement caused by pipe strain	N.S.	0.002 (0.05)	0.002 (0.05)
Alignment	N.S.		See Note 2
Vibration at bearing housing	0.25 in/s (6.3 mm/s)		See Note 3

N.S. = Not specified

Note 1: The maximum values of acceptable unbalance are: 1800 RPM: 0.021 oz•in/lb (1500 RPM: 40 g•mm/kg) of mass; 3600 RPM: 0.011 oz•in/lb (2900 RPM: 20 g•mm/kg) of mass. Durco performs a single plane spin balance on most impellers. The following impellers are exceptions: 10X8-14 and 10X8-16H. On these we perform a two plane dynamic balance, as required by the ASME B73.1M standard. All balancing, whether single or two plane, is performed to the ISO 1940 Grade 6.3 tolerance criteria.

Note 2: The ASME B73.1M standard does not specify a recommended level of alignment. Durco recommends that the pump and motor shafts be aligned to within 0.002 in (0.05 mm) parallel F.I.M. and 0.0005 in/in (0.0005 mm/mm) angular F.I.M. Closer alignment will extend MTBPM. For a detailed discussion of this subject see the Alignment section of this IOM.

Note 3: The ASME B73.1M standard for vibration at the bearing housing is 0.25 in/s (6.3 mm/second) peak velocity or 0.0025 (63 µm) peak-to-peak displacement. Durco recommends the following peak velocities, in in/s (mm/second): Group 1 = 0.1 (2.5), Group 2 = 0.15 (3.8), Group 3 = 0.25 (6.3).

ADDITIONAL PARAMETERS CHECKS BY DURCO

The parameters listed below are somewhat more difficult to measure and/or may require specialized equipment. for this reason, they are not typically checked by our customers, although they are monitored by Durco during the manufacturing and/or design process. These parameters are described at the end of this appendix.

Topic	ASME B73.1M Std.	Suggested By Major Seal Vendors	Suggested And/Or Provided By Durco
Shaft - Maximum roughness at seal chamber	32µin (0.80 µm)		16µin (0.40 µm)
Bearing Housing - Bore Concentricity			0.001 in (0.025 mm)
Complete Pump - Dynamic Shaft Deflection*	0.005 in (0.13 mm)	0.002 in (0.05 mm)	0.002 in (0.05 mm)

*The ASME standard recommends 0.005 in (0.13 mm) max deflection at the impeller, while Durco provides 0.002 in (0.05 mm) max deflection at the mechanical seal. The two recommendations are essentially equivalent.

OVERVIEW

When Durco introduced the ANSI 3 Power End, a new concept called "The Signature Program" was announced. The objective of this program is to provide our customers with a complete pumping system with at least three years MTBPM. Obtaining this objective requires a major commitment from Durco, the seal manufacturer and other suppliers, and the customer.

First of all, the reliability of a process pump largely depends upon the correct selection of equipment, including the pump, seal, and accessories. However, proper handling, installation, maintenance, and operation are equally important. To maximize reliability certain parameters must be measured and maintained within certain specified tolerances.

The primary purpose of this appendix is to provide a summary of these various physical parameters and the associated tolerances which we feel are vital to maximizing pump MTBPM. (A secondary benefit of controlling these parameters can be a reduction of seal emissions.) When appropriate, the appendix also shows pictorially how to take the various measurements.

SHAFT

Before installing the shaft into the power end it is important to check the following parameters.

Diameter tolerance, under bearings

In order to ensure that the bearings fit around the shaft properly, it is important that the shaft diameter is con-

sistently within the min/max values given below. A micrometer should be used to check the dimension of the OD of the shaft.

US Customary Units		Group 1	Group 2	Group 3
OB bearing/ shaft - in	Bearing	1.1811/1.1807	1.9685/1.9680	2.7559/2.7553
	Shaft	1.1816/1.1812	1.9690/1.9686	2.7565/2.7560
	Fit	0.0009T/0.0001T	0.0010T/0.0001T	0.0012T/0.0001T
IB bearing/ shaft in	Bearing	1.3780/1.3775	1.9685/1.9680	2.7559/2.7553
	Shaft	1.3785/1.3781	1.9690/1.9686	2.7565/2.7560
	Fit	0.0010T/0.0001T	0.0010T/0.0001T	0.0012T/0.0001T

Metric		Group 1	Group 2	Group 3
OB bearing/ shaft - mm	Bearing	30.000/29.990	50.000/49.987	70.000/69.985
	Shaft	30.013/30.003	50.013/50.003	70.015/70.002
	Fit	0.023T/0.003T	0.026T/0.003T	0.030T/0.002T
IB bearing/ shaft - mm	Bearing	35.000/34.989	50.000/49.987	70.000/69.985
	Shaft	35.014/35.004	50.013/50.003	70.015/70.002
	Fit	0.025T/0.004T	0.026T/0.003T	0.030T/0.002T

The ID of the bearings should also be checked and should conform to the min/max values given above.

Impeller Balancing

Shaft whip is deflection where the centerline of the impeller is moving around the true axis of the pump. It is not caused by hydraulic force but rather by an imbalance with the rotating element. Shaft whip is very hard on the mechanical seal because the faces must flex with each revolution in order to maintain contact. To minimize shaft whip it is imperative that the impeller is balanced. All impellers manufactured by Durco are balanced after they are trimmed. If for any reason, a customer trims an impeller, it must be re-balanced. The maximum values of acceptable unbalance are:
1800 RPM: 0.021 oz•in/lb (1500 RPM: 40 g•mm/kg) of mass
3600 RPM: 0.011 oz•in/lb (2900 RPM: 20 g•mm/kg) of mass

Durco performs a single plane spin balance on most impellers. The following impellers are exceptions: 10X8-14 and 10X8-16H. On these we perform a two plane dynamic balance, as required by the ASME B73.1M standard. All balancing, whether single or two plane, is performed to the ISO 1940 Grade 6.3 tolerance criteria.

BEARING HOUSING

Diameter (ID) tolerance at bearings

An inside caliper should be used to check the dimension of the ID of the housing and bearing carrier. The diameter must be within the following min/max values given in order to provide the proper bearing tightness.

US Customery Units		Group 1	Group 2	Group 3
OB bearing/ housing - in	Bearing	2.8346/2.8341	4.3307/4.3301	5.9055/5.9047
	Housing	2.8346/2.8353	4.3310/4.3316	5.9056/5.9067
	Fit	0.0012L/0.0000L	0.0015L/0.0003L	0.0020L/0.0001L
IB bearing/ housing - in	Bearing	2.8346/2.8341	4.3307/4.3301	5.9055/5.9047
	Housing	2.8346/2.8353	4.3310/4.3316	5.9058/5.9065
	Fit	0.0012L/0.0000L	0.0015L/0.0003L	0.0018L/0.0003L

Metric		Group 1	Group 2	Group 3
OB bearing/ housing - mm	Bearing	71.999/71.986	110.000/109.985	150.000/149.979
	Shaft	71.999/72.017	110.007/110.022	150.002/150.030
	Fit	0.031L/0.000L	0.037L/0.007L	0.051L/0.002L
IB bearing/ housing - mm	Bearing	71.999/71.986	110.000/109.985	150.000/149.979
	Shaft	71.999/72.017	110.007/110.022	150.007/150.025
	Fit	0.031L/0.000L	0.037L/0.007L	0.046L/0.007L

The OD of the bearings should also be checked and should conform to the min/max values given above.

POWER END ASSEMBLY

Shaft/Shaft Sleeve Runout

Shaft runout is the amount the shaft is "out of true" when rotated in the pump. It is measured by attaching a dial indicator to a stationary part of the pump so that its contact point indicates the radial movement of the shaft surface as the shaft is rotated slowly. If a shaft sleeve is used then shaft sleeve runout must be checked. It is analogous to shaft runout. Measurement of shaft runout/ shaft sleeve runout will disclose any out of roundness of the shaft, any eccentricity between the shaft and the sleeve, any permanent bend in the shaft, and/or any eccentricity in the way the shaft or bearings are mounted in the bearing housing.

Shaft runout can shorten the life of the bearings and the mechanical seal. The following diagram shows how to measure shaft/shaft sleeve runout. Note that both ends need to be checked. The runout should be 0.001 in (0.025 mm) FIM or less.

FIGURE C-1

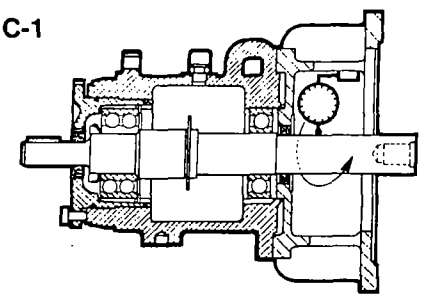

Radial Deflection – Static

Radial movement of the shaft can be caused by a loose fit between the shaft and the bearing and/or the bearing and the housing. This movement is measured by attempting to displace the shaft vertically by applying an upward force of approximately ten pounds to the impeller end of the shaft. While applying this force, the movement of an

indicator is observed as shown in the following diagram. The movement should be checked at a point as near as possible to the location of the seal faces. A movement of more than 0.002 in (0.05 mm) is not acceptable.

FIGURE C-2

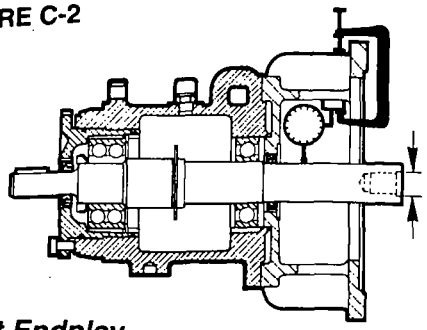

Shaft Endplay

The maximum amount of axial shaft movement, or endplay, on a Durco pump should be 0.001 in (0.03 mm) and is measured as shown below. Observe indicator movement while tapping the shaft from each end in turn with a soft mallet. Shaft endplay can cause several problems. It can cause fretting or wear at the point of contact between the shaft and the secondary sealing element. It can also cause seal overloading or underloading and possibly chipping of the seal faces. It can also cause the faces to separate if significant axial vibration occurs.

FIGURE C-3

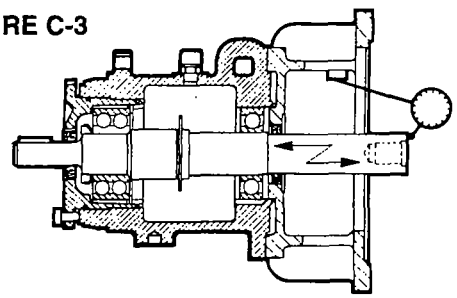

SEAL CHAMBER

Face Squareness to Shaft

Also referred to as "Seal Chamber Face Run-Out." This runout occurs when the seal chamber face is not perpendicular to the shaft axis. This will cause the gland to cock, which causes the stationary seat to be cocked, which causes the seal to wobble. This runout should be less than 0.003 in (0.08 mm) and should be measured as shown below:

FIGURE C-4

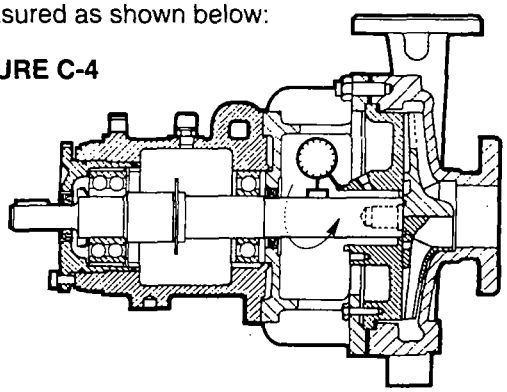

Register Concentricity

An eccentric seal chamber bore or gland register can interfere with the piloting and centering of the seal components and alter the hydraulic loading of the seal faces, resulting in reduction of seal life and performance. The seal chamber register concentricity should be less than 0.005 in (0.13 mm). The diagram below shows how to measure this concentricity.

FIGURE C-5

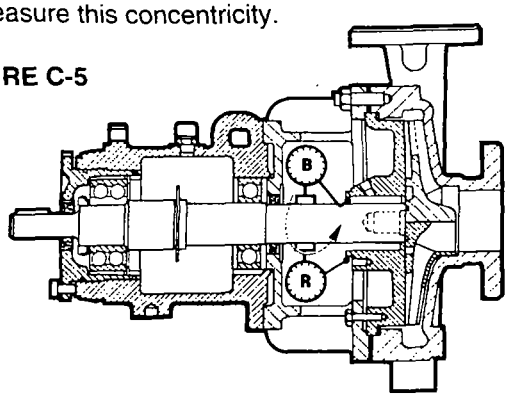

COMPLETE PUMP

Shaft Movement Caused by Pipe Strain

Pipe strain is any force put on the pump casing by the piping. Pipe strain should be measured as shown below. Install the indicators as shown before attaching the piping to the pump. The suction and discharge flanges should now be bolted to the piping separately while continuously observing the indicators. Indicator movement should not exceed 0.002 in (0.05 mm).

FIGURE C-6

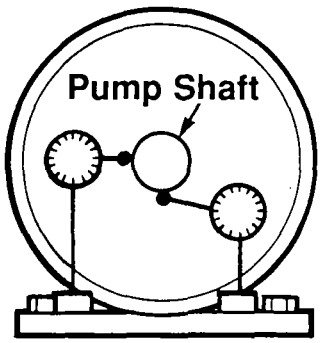

Alignment

Misalignment of the pump and motor shafts can cause the following problems:

- Failure of the mechanical seal
- Failure of the motor and/or pump bearings
- Failure of the coupling
- Excessive vibration/noise

The schematics below show the technique for a typical rim and face alignment using a dial indicator. It is important that this alignment be done after the flanges are loaded, and at typical operating temperatures. If proper alignment cannot be maintained a C-flange motor adapter and/or stilt/spring mounting should be considered.

FIGURE C-7

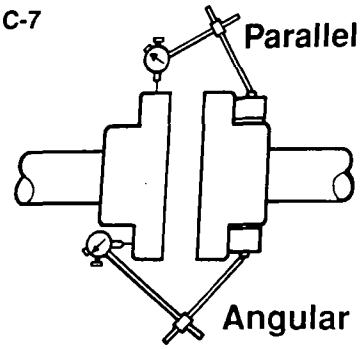

Many companies today are using laser alignment which is a more sophisticated and accurate technique. With this method a laser and sensor measure misalignment. This is fed to a computer with a graphic display which shows the required adjustment for each of the motor feet.

Vibration Analysis

Vibration Analysis is a type of condition monitoring where a pump's vibration "signature" is monitored on a regular, periodic basis. The primary goal of vibration analysis is extension on MTBPM. By using this tool we can often determine not only the existence of a problem before it becomes serious, but also the root cause and possible the solution.

Modern vibration analysis equipment not only detects if a vibration problem exists, but can also suggest the cause of the problem. On a centrifugal pump, these causes can include the following: unbalance, misalignment, defective bearings, resonance, hydraulic forces, cavitation, and recirculation. Once identified, the problem can be corrected, leading to increased MTBPM for the pump.

Durco does not make vibration analysis equipment, however we strongly urge our customers to work with an equipment supplier or consultant to establish an on-going vibration analysis program.

The ASME standard for vibration at the bearing housing is 0.25 inches/second (6.35 mm/sec) peak velocity or 0.0025 inches (0.064 mm) peak-to-peak displacement. We recommend the following peak velocities:

Group 1	0.1 in/s	(2.5 mm/s)
Group 2	0.15 in/s	(3.8 mm/s)
Group 3	0.25 in/s	(6.4 mm/s)

SPECIAL PARAMETERS CHECKED BY DURCO

Shaft – Maximum roughness at seal chamber

The ASME B73.1M standard requires that the surface finish of the shaft (or sleeve) through the stuffing box and at rubbing contact bearing housing seals shall not exceed a roughness of 32 µin (0.8 µm). Durco shafts do not exceed 16 µin (0.4 µm) at these areas. Durco audits smoothness by using a profilometer surface finish gauge.

Bearing Housing – Bore Concentricity

If the bore for holding the bearing is eccentric, the bearing will be shifted off center. This will contribute to shaft runout. Durco measures this concentricity by using computerized measuring equipment. The concentricity should not exceed 0.001 in (0.03 mm).

Complete Pump – Dynamic Shaft Deflection

In regards to pump operation, a very important factor for maximizing pump MTBPM is the avoidance of off-design pump operation. In order to maximize the life of the seal and bearings, a process pump should be run as close as possible to its Best Efficiency Point (BEP).

Dynamic shaft deflection is a deflection of the shaft caused by unbalanced hydraulic forces acting on the impeller. Dynamic shaft deflection will change as the pump is operated on various points along the curve. When the pump is operated at BEP, the shaft deflection is zero. This deflection is very difficult to measure. The ASME B73.1M standard states that dynamic shaft deflection at the impeller centerline shall not exceed 0.005 in (0.13 mm) at maximum load (shutoff) for pump sizes A70 and smaller and at design load for pump sizes A80 and larger. The chart on page 61 shows that Durco pumps are below this limit.

At a given point on the curve, the shaft deflection is constant and is constantly in the same direction. The centerline of the impeller, though bent from parallel, does not move. For this reason, in many cases, shaft deflection is not particularly hard on mechanical seals. It is, however, hard on bearings, since the force which causes shaft deflection can be a tremendous load on them. The amount of deflection depends on three factors: how the shaft is supported, the strength of the shaft and the amount of unbalanced hydraulic force experienced by the shaft/ impeller. If you feel you are having a shaft deflection problem, refer to the Durco Pump Engineering Manual for a detailed discussion on how to calculate deflection.

APPENDIX D

INSTALLATION/CLEARANCE SETTING FOR REVERSE VANE IMPELLER

Install the impeller (#103) by screwing it onto the shaft (use heavy gloves) until it firmly seats against the shaft shoulder.

⚠WARNING

The impeller could have sharp edges which could cause an injury. It is very important to wear heavy gloves.

Tighten the impeller with the impeller wrench from the Durco tool kit. To do this, grasp the impeller in both hands and, with the impeller wrench handle to the left (viewed from the impeller end of the shaft) (Figure D-1), spin the impeller forcefully in a clockwise direction to impact the impeller wrench handle on the work surface to the right (Figure D-2).

FIGURE D-1

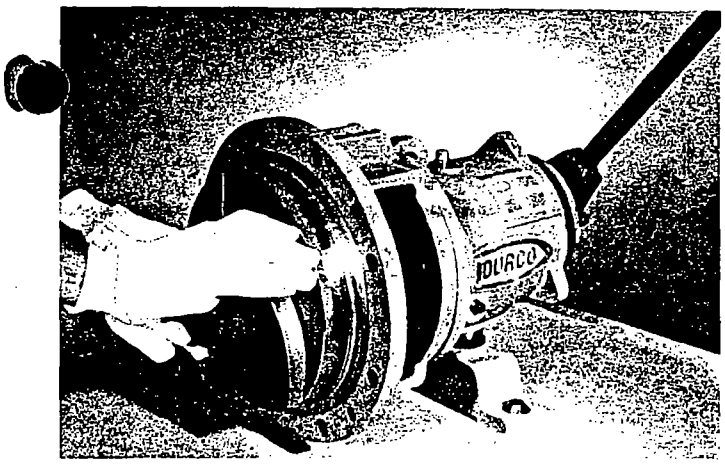

FIGURE D-2

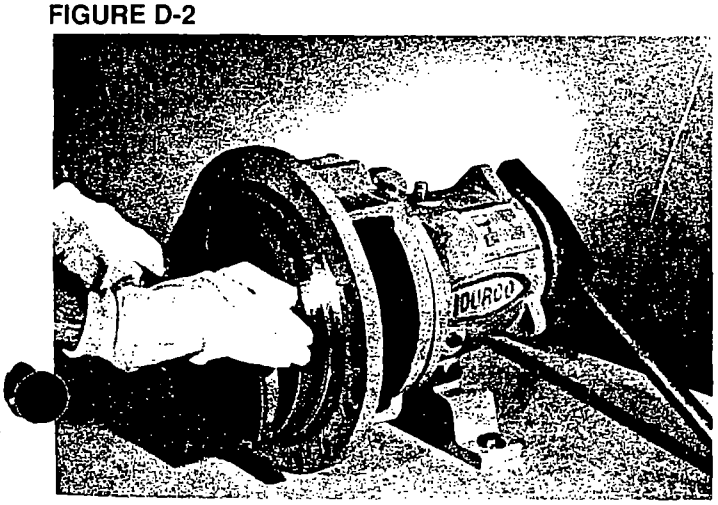

FIGURE D-3

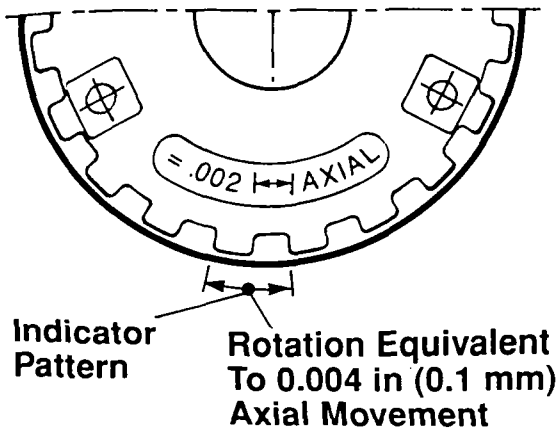

⚠CAUTION

Do not attempt to tighten the impeller on the shaft by hitting the impeller with a hammer or any other object or by inserting a pry bar between the impeller vanes. Serious damage to the impeller may result from such actions.

Now set the impeller clearance by loosening the set screws (#201A) and rotating the bearing carrier (#201) to obtain the proper clearance. Turn the bearing carrier counterclockwise until the impeller comes into light rubbing contact with the rear cover. Rotating the shaft at the same time will accurately determine this zero setting. Now, rotate the bearing carrier clockwise to get the proper clearance. Refer to Figure D-4 for the proper impeller clearance. Rotating the bearing carrier the width of one of the indicator patterns cast into the bearing carrier moves the impeller axially 0.004 in (0.1 mm). (See Figure D-3.)

Determine how far to rotate the bearing carrier by dividing the desired impeller clearance by 0.004 (one indicator pattern). Tightening the set screws (#201A) will cause the impeller to move 0.002 in (0.05 mm) closer to the rear cover because of the internal looseness in the bearing carrier threads. This must be considered when setting the impeller clearance. Rotate the bearing carrier clockwise the required amount to get the desired clearance to the cover. Lastly, tighten the set screws (#201A) to lock the bearing carrier in place.

FIGURE D-4
Impeller Clearance Settings

Temperature – °F (°C)	Clearance to cover – in (mm)
<200 (93)	0.018 ± 0.003 (0.46 ± 0.08)
250 (121)	0.021 (0.53)
300 (149)	0.024 (0.61)
350 (176)	0.027 (0.69)
400 (204)	0.030 (0.76)
450 (232)	0.033 (0.84)
>500 (260)	0.036 (0.91)

Notes
1. For 3 x 1.5-13 and 3x2-13 at 3500 RPM add 0.003 in (0.08 mm).
2. Rotation of bearing carrier from center of one lug to center of next results in axial shaft movement of 0.004 in (0.1 mm).
3. Reverse vane impeller set to cover, open impeller to casing.

FIGURE D-5

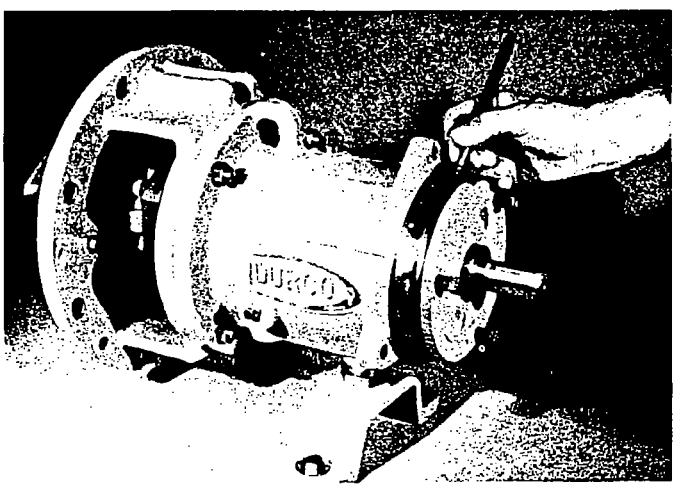

Example: For an impeller setting of 0.020 in (0.5 mm) off the rear cover plate, it is necessary to add 0.002 in (0.05 mm) for the movement caused by tightening the set screws; therefore, an adjustment of 0.022 in (0.56 mm) is needed. First, turn the bearing carrier counterclockwise until the impeller comes into light rubbing contact with the rear cover. Now rotate the bearing carrier clockwise 5-1/2 indicator patterns to get the 0.022 in (0.56 mm) clearance (0.004 x 5-1/2 = 0.022). We suggest that a felt tip pen be used to mark an initial reference point on the bearing housing and the bearing carrier as shown in Figure D-5. Then make a second mark on the bearing carrier 5-1/2 indicator patterns counterclockwise from the initial reference point. Now rotate the bearing carrier clockwise until the second mark on the bearing carrier lines up with the initial reference point mark on the bearing housing. The impeller is now set correctly.

APPENDIX E

INSTALLATION/CLEARANCE SETTING FOR FRONT VANE OPEN STYLE IMPELLER

Install the impeller (#103) by screwing it onto the shaft (use heavy gloves) until it firmly seats against the shaft shoulder.

⚠ WARNING

The impeller could have sharp edges which could cause an injury. It is very important to wear heavy gloves.

Tighten the impeller with the impeller wrench from the Durco tool kit. To do this, grasp the impeller in both hands and, with the impeller wrench handle to the left (viewed from the impeller end of the shaft) (Figure E-1), spin the impeller forcefully in a clockwise direction to impact the impeller wrench handle on the work surface to the right (Figure E-2).

FIGURE E-1

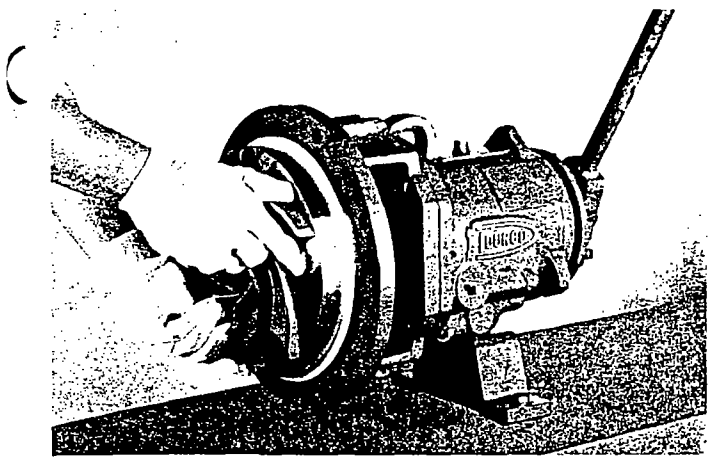

FIGURE E-2

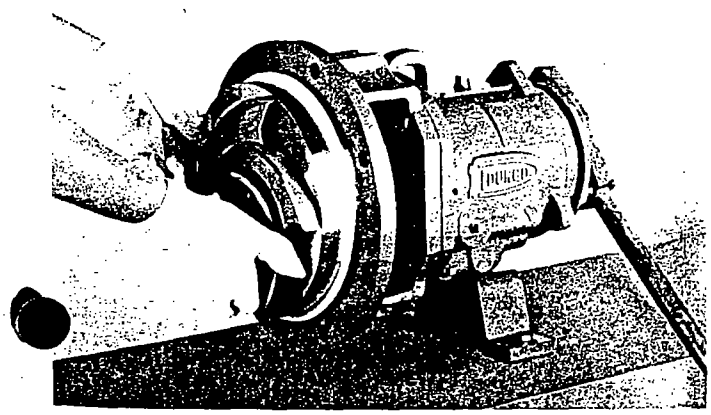

⚠ CAUTION

Do not attempt to tighten the impeller on the shaft by hitting the impeller with a hammer or any other object or by inserting a pry bar between the impeller vanes. Serious damage to the impeller may result from such actions.

Like all front vane open style impellers, the Durco open impeller clearance must be set off the casing. The casing must be present to accurately set the impeller clearance. (Realizing that this can be very difficult, Durco strongly promotes the use of reverse vane impellers, which do not require the presence of the casing to be properly set.)

Attach the power end/rear cover plate assembly to the casing. Now set the impeller clearance by loosening the set screws (#201A) and rotating the bearing carrier (#201) to obtain the proper clearance. Turn the bearing carrier clockwise until the impeller comes into light rubbing contact with the casing. Rotating the shaft at the same time will accurately determine this zero setting. Now, rotate the bearing carrier counterclockwise to get the proper clearance. Refer to Figure E-4 for the proper impeller clearance. Rotating the bearing carrier the width of one of the indicator patterns cast into the bearing carrier moves the impeller axially 0.004 in (0.1 mm). (See Figure E-3.)

FIGURE E-3

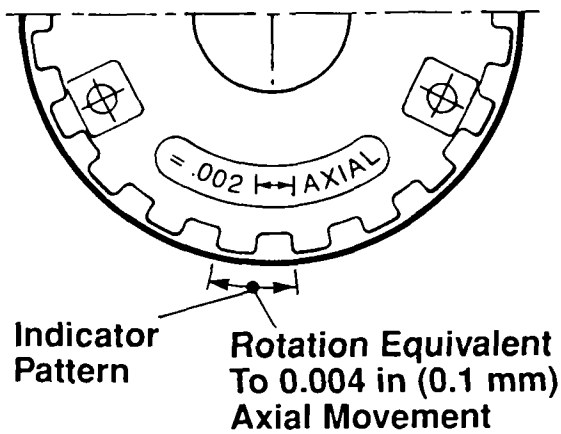

Determine how far to rotate the bearing carrier by dividing the desired impeller clearance by 0.004 (one indicator pattern). Tightening the set screws (#201A) will cause the impeller to move 0.002 in (0.05 mm) away from the casing because of the internal looseness in the bearing carrier threads. This must be considered when setting the impeller clearance. Rotate the bearing carrier

counterclockwise the required amount to get the desired clearance to the casing. Lastly, tighten the set screws (#201A) to lock the bearing carrier in place.

FIGURE E-4
***Impeller Clearance* Settings**

Temperature – °F (°C)	Clearance to casing – in (mm)
<200 (93)	0.018 ± 0.003 (0.46 ± 0.08)
250 (121)	0.021 (0.53)
300 (149)	0.024 (0.61)
350 (176)	0.027 (0.69)
400 (204)	0.030 (0.76)
450 (232)	0.033 (0.84)
>500 (260)	0.036 (0.91)

Notes
1. For 3 x 1.5-13 and 3x2-13 at 3500 RPM add 0.003 in (0.08 mm).
2. Rotation of bearing carrier from center of one lug to center of next results in axial shaft movement of 0.004 in (0.1 mm).
3. Reverse vane impeller set to cover, open impeller to casing.

FIGURE E-5

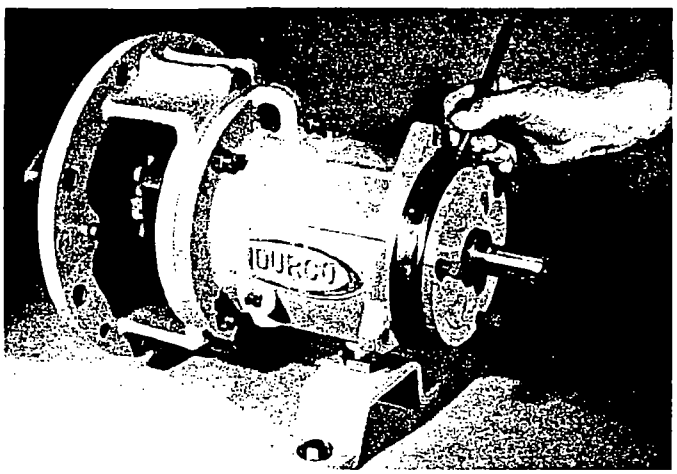

Example: For an impeller setting of 0.020 in (0.5 mm) off the casing, it is necessary to subtract 0.002 in (0.05 mm) for the movement caused by tightening the set screws; therefore, an adjustment of 0.018 in (0.46 mm) is needed. First, turn the bearing carrier clockwise until the impeller comes into light rubbing contact with the casing. Now rotate the bearing carrier counterclockwise 4-1/2 indicator patterns to get the 0.018 in (0.46 mm) clearance (0.004 x 4-1/2 = 0.018). We suggest that a felt tip pen be used to mark an initial reference point on the bearing housing and the bearing carrier as shown in Figure E-5. Then make a second mark on the bearing carrier 4-1/2 indicator patterns clockwise from the initial reference point. Now rotate the bearing carrier counterclockwise until the second mark on the bearing carrier lines up with the initial reference point mark on the bearing housing. At that point, the setting will be 0.018 in (0.46 mm). Tightening the set screws will cause a 0.002 in (0.05 mm) draw of the bearing carrier threads, which will give the final setting of 0.020 in (0.5 mm).

The above procedure is fairly straightforward when doing the final setting of the impeller. However, it can be quite laborious when doing the preliminary setting in order to establish the location of the mechanical seal. For this reason, some companies will take the following shortcut. Before the pump is taken out of service, they adjust the impeller until it touches the casing. The impeller is then backed off by 0.020 in (0.5 mm), or whatever is the desired clearance. Now, the impeller is adjusted all the way back to the rear cover, and this distance is recorded. The pump is now removed from the casing and taken to the shop for maintenance. When it is time to set the seal, the impeller is simply set off the rear cover by the same distance recorded earlier.

Note that if the casing, cover, impeller or shaft need to be replaced this short cut method will not work.

APPENDIX F

REMOVAL/INSTALLATION OF SEALS WITH SEALSENTRY™ FMI SEAL CHAMBER

REMOVAL

After removing the impeller, slide the hook sleeve off the shaft. Remove the rotating unit from the sleeve. Remove cover. Remove the stationary seat from the seal chamber counter bore.

INSTALLATION

1. Set the impeller as instructed in Appendix D or E.
2. Remove the impeller.
3. Install stationary seat into seal chamber counterbore.
4. Refer to Figure F-1. Measure distance TL from the seal face on the stationary seat to the end of the hook sleeve.
5. The seal working length, WL, is determined from the seal drawing provided by the seal manufacturer. Subtract the seal working length WL from TL.
6. The distance remaining, RL, is the distance from the end of the hook sleeve to the rotating unit. Install the rotating unit at this location.
7. Install the hook sleeve onto the shaft.
8. Install the impeller to the shaft, locking the hook sleeve into position.

FIGURE F-1

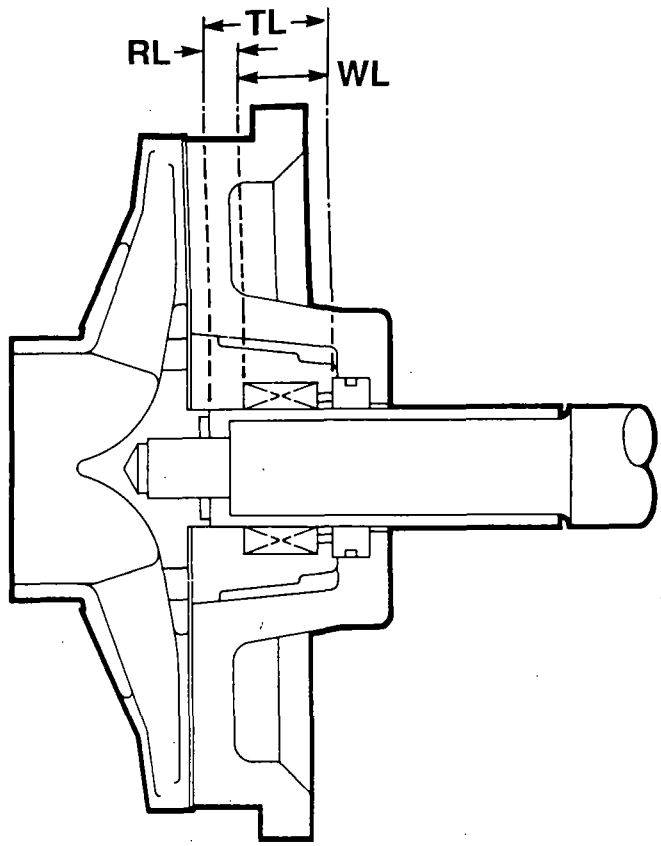

APPENDIX G

DURCO MARK III MAINTENANCE INSTRUCTIONS BEARING HOUSING OIL SEALS (LABYRINTH TYPE) INPRO/SEAL® VBX BEARING ISOLATORS

INTRODUCTION

The Inpro "VBX" Bearing Isolator is a labyrinth type seal which isolates the bearings from the environment (uncontaminated), and retains the oil in the bearing housing. The bearing isolator consists of a rotor and a stator. The rotor revolves with the shaft, driven by a close fitted drive ring that rotates with the shaft. the stator is a stationary component that fits into the housing bore with a press fit (nominal 0.002 in (0.05 mm) interference) and with an "O" ring gasket seal. The two pieces are assembled as a single unit, and are axially locked together by an "O" ring. There is no mechanical contact between the rotor and stator when the isolator is running.

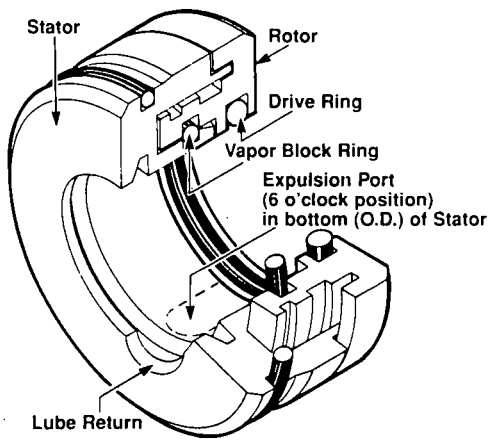

The VBX *is intended to be* a nonseparable design. The shaft may be removed from the housing without removing the VBX.

1. If the VBX is removed from the housing, for any reason, it must be replaced with a new VBX to ensure a perfect seal with the housing bore.
2. Repair or replacement of the seals is only necessary when excessive oil leakage is evident. However, if for any other reason, the bearing housing is to be disassembled or the pump shaft removed, it is recommended that the *rotor "O" rings* (which seal on the shaft) *be replaced.* Spare or replacement "O" rings may be obtained from "Inpro" distributors.

   The "Inpro" VBX bearing isolator is a one piece assembly. The rotor must not pull out of the stator. If the rotor can be removed, the complete seal assembly must be replaced.
3. If the bearing housing or bearing carrier with *bronze* VBX seals is washed or cleaned using a caustic type bath, the bronze material may discolor (turn black). If this happens, the complete seal assembly must be replaced. ***Note:*** This may occur if the housing is left in a caustic bath over a long period of time (more than 8 hours).
4. To remove the VBX bearing isolator:
   A. Remove the pump shaft as described in the pump disassembly instructions.
   B. From the inside of the bearing housing or bearing carrier, place a bar (made from a soft material such as wood or plastic) against the inside face of the seal. Push the seal out by tapping the bar with a soft mallet or an arbor press.
5. To *install a new VBX* bearing isolator, *in the impeller end of the bearing housing/adapter:*
   A. Position the impeller end (inboard) seal in the bore of the adapter or bearing housing with the **single expulsion port at the 6 o'clock position**, (carefully keep aligned with the bore).
   B. The seal stator O.D. press fits into the bore. Use an arbor press. Place a block or bar (large enough to protect the rotor flange) between the arbor press ram and seal face. Press the seal down into the bore stopping at the shoulder on the stator O.D.

   The elastomer "O" ring acts as a gasket to ensure damming up of small imperfections in the housing bore. The "O" ring is designed to be compressed to the point of overfilling its groove. The overfilled material is sheared off during assembly. Remove any sheared "O" ring material which may extrude from the bore.
6. To *install a new VBX* bearing isolator in the *drive end (outboard) side of the bearing carrier:*
   A. Position the outboard seal in the bore of the bearing carrier (no orientation of the multiple expulsion ports is necessary) and carefully keep aligned with the bore.
   B. The seal stator O.D. press fits into the bore. Use an arbor press. Place a block or bar (large enough to protect the rotor flange) between the arbor press ram and seal face. Press the seal down into the bore stopping at the shoulder on the stator O.D. Remove any sheared o-ring material which may extrude from the bore.
7. Assemble the bearing carrier/VBX bearing isolator on to the shaft:
   A. On GP1 and GP2 pumps, the outboard double row bearing is nested inside of the bearing carrier, and retained in place by a snap ring. This **snap ring has a tapered edge on one side. The snap ring must be installed with the flat face of the snap ring against the bearing** and the tapered edge

away from the bearing. On GP3 pumps, the bearing is held in place with a retaining ring fastened with cap screws.

B. Using sand paper, remove burrs and break any sharp edges off the keyway at end of the shaft.

C. It is important to prevent the corners of the keyway from cutting the "O" rings during assembly. This can be accomplished with the use of a half key or a thin flexible sleeve. Lightly lubricate the shaft with vaseline and slide the bearing carrier on to the shaft, pushing on the VBX rotor, until the bearing is seated. Assemble the bearing retainer snap ring.

D. Check the position of the rotor (make sure rotor and stator have not separated) and seat the rotor snugly into the stator by hand.

8. Assemble the shaft/bearings into the bearing housing:

A. **Screw a tapered cone into the impeller end of the shaft to act as a guide and to prevent from cutting the rotor "O" ring.**

B. Lightly lubricate the shaft with vaseline and assemble the shaft into the bearing housing, sliding the shaft through the rotor, keeping the rotor seated snugly into the stator by hand.

C. After the bearing carrier is screwed in place, rotate the shaft and check to make sure that both seal rotors are positioned snugly inside of the stators. If for some reason, the rotor becomes disengaged or is pushed completely out of the stator, the VBX bearing isolator must be replaced. It is not advisable to force the rotor back into the stator.

APPENDIX H

SEALMATIC PUMP: INSTALLATION OF REPELLER COVER, REPELLER, COVER, IMPELLER.

GROUP 2 PUMPS:

1. Install the repeller cover to the adapter using capscrews (#140).
2. Install a new repeller O-ring (#181A) into the repeller groove. Lubricate the O-ring with liquid soap.
3. Install the repeller. Hold the repeller firmly against the end of the shaft by temporarily installing a seal guide (nose guide), or the impeller. The seal guide is available in the "Durco Tool Kit" shown in Figure 21.
4. Loosen the set screw (#201A) in the bearing carrier.
5. The repeller may now be set to the repeller cover. Rotate the bearing carrier counterclockwise until you feel the repeller cover. Now rotate the bearing carrier clockwise to obtain a 0.015 to 0.020 in (0.38-0.51 mm) clearance. (Refer to Appendix D for information on how bearing carrier rotation affects axial shaft movement.) The repeller gap can be checked with a feeler gage.
6. Remove the temporarily installed seal guide. or impeller.
7. Install the repeller cover/cover gasket (#182).
8. Install the cover (#106). Attach to the repeller cover using capscrews (#195).
9. Snug the set screws (#201A) against the housing to lock the setting.
10. Install the impeller gasket (#104) into the impeller and install the impeller firmly to the shaft. (Refer to Appendix D for information on how to tighten impeller to shaft.) The correct repeller setting should correctly set the impeller. This can be checked with a feeler gage, check the closest impeller vane clearance. This gap should be 0.015 to 0.020 in (0.38-0.51 mm). If the impeller gap is outside of the correct setting, you may readjust to get the best gap at the repeller and impeller.

GROUP 3 PUMPS:

1. Install the repeller cover (#180) over the shaft and push it all the way back until it touches the bearing housing.
2. Install the repeller cover/cover gasket (#182).
3. Install a new repeller O-ring (#181A) to the repeller groove. Lubricate the O-ring with liquid soap.
4. Install the slip-on repeller (#181) onto the shaft.
5. Install the cover (#106) to the adapter. Attach to the adapter using capscrews (#140).
6. Attach the repeller cover to the cover using the capscrews (#195).
7. Loosen the set screws (#201A) in the bearing carrier.
8. The repeller may now be set to the repeller cover. Hold the repeller firmly against the end of the shaft by temporarily installing a seal guide. Rotate the bearing carrier counterclockwise until you feel the repeller contact the repeller cover. Now rotate the bearing carrier clockwise to obtain a 0.015 to 0.020 in (0.38-0.51 mm) clearance. (Refer to Appendix D for information on how bearing carrier rotation affects axial shaft movement.)
9. Finally, snug the set screws (#201A) against the housing to lock the setting.
10. Install the impeller gasket (#104) into the impeller and install the impeller firmly to the shaft, after removing the seal guide. (Refer to Appendix D for information on how to tighten impeller to shaft.) The correct repeller setting should correctly set the impeller. This can be checked with a feeler gage, check the closest impeller vane clearance. This gap should be 0.015 to 0.020 in (0.38-0.51 mm). If the impeller gap is outside of the correct setting, you may readjust to get the best gap at the repeller and impeller.

APPENDIX I

ALLOWABLE NOZZLE LOADS DURCO PUMPS (ASME B73.1M)

FIGURE I-1: Axis System

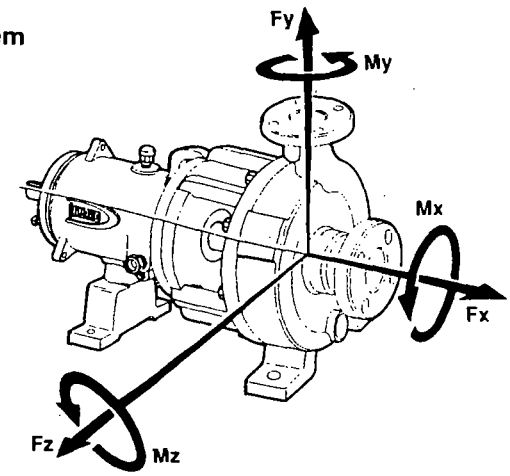

The allowable nozzle loads listed in Figure I-2 may be applied to any MARK III Standard Horizontal, Sealmatic, Lo-Flo, Recessed Impeller, or Unitized Self-Priming pumps in Ductile cast iron, all Durco 18-8 alloys, Chlorimet, Durimet 20, Carbon Steel, Monel, and Inconel. The allowable loads must be multipled by 0.70 for pumps made of nickel and titanium.

The loads listed in Figure I-2 are the combined values resolved to the center of the pump, except for the Fr + Mr/3 limits, which apply to the separate suction and discharge flanges. Some piping analysis programs calculate forces and moments on each flange, and do not translate them to a common point at the center of the pump. The formulas in Figure I-3 and Dimensions in Figure I-4 can be used to translate the forces and moments on each flange to the common center point.

FIGURE I-2: Allowable Forces and Moments (U.S. Customary Units)

Pump Nozzle Sizes	Combined Loading at Center of Pump						Flange Suction Frs+Mrs/3	Loading Discharge Frd+Mrd/3
	Forces (lb_f)			Moments (lb_f • ft)				
	Fx	Fy	Fz	Mx	My	Mz		
1.5 x 1	120	295	235	590	295	295	325	220
1.5 x 1.5	120	295	235	590	295	295	325	325
2 x 1	145	365	285	730	365	365	435	220
2 x 1.5	165	405	325	815	405	405	435	325
2 x 2	175	435	350	875	435	435	435	435
3 x 1.5	220	545	435	4090	545	545	650	325
3 x 2	235	590	470	1170	590	590	650	435
3 x 3	260	650	520	1300	650	650	650	650
4 x 3	325	815	650	1625	815	815	865	650
6 x 4	470	1170	940	2345	1170	1170	1300	865
8 x 6	610	1520	1215	3030	1520	1520	1730	1300
10 x 8	670	1670	1335	3350	1670	1670	1870	1730

FIGURE I-2: Allowable Forces and Moments (Metric Units)

Pump Nozzle Sizes	Combined Loading at Center of Pump						Flange Suction Frs+Mrs*1.09	Loading Discharge Frd+Mrd*1.09
	Forces (N)			Moments (N•m)				
	Fx	Fy	Fz	Mx	My	Mz		
1.5 x 1	534	1313	1046	802	401	401	1446	979
1.5 x 1.5	534	1313	1046	802	401	401	1446	1446
2 x 1	645	1624	1268	993	496	496	1936	979
2 x 1.5	734	1802	1446	1108	551	551	1936	1446
2 x 2	779	1936	1558	1190	592	592	1936	1936
3 x 1.5	979	2425	1936	1482	741	741	2893	1446
3 x 2	1046	2626	2092	1591	802	802	2893	1936
3 x 3	1157	2893	2314	1768	884	884	2893	2893
4 x 3	1446	3627	2893	2210	1108	1108	3849	2893
6 x 4	2093	5207	4183	3189	1591	1591	5785	3849
8 x 6	2715	6764	5407	4121	2067	2067	7699	5785
10 x 8	2982	7432	5941	4556	2271	2271	8322	7699

FIGURE I-3: Load Translation Formulae

Formula for all pumps except Recessed	Formula for Recessed Impeller
Fx = Fxs + Fxd	Same
Fy = Fys + Fyd	Same
Fz = Fzs + Fzd	Same
Mx = Mxs + Mxd + (Fzd*H) + (Fzs*M)	Mxs + Mxd + (Fzd*H) + (Fyd*M)
My = Mys + Myd + (-Fzs*L)	Mys + Myd + (-Fzs*L) + (-Fxd*M)
Mz = Mzs + Mzd + (Fys*L) - (Fxd*H) - (Fxs*M)	Mzs + Mzd + (Fys*L) - (Fxd*dH)
$Frs = \sqrt{(Fxs^2 + Fys^2 + Fzs^2)}$	Same
$Mrs = \sqrt{(Mxs^2 + Mys^2 + Mzs^2)}$	Same
$Frd = \sqrt{(Fxd^2 + Fyd^2 + Fzd^2)}$	Same
$Mrd = \sqrt{(Mxd^2 + Myd^2 + Mzd^2)}$	Same
Suction Loading (US Customary) = Frs + Mrs/3	Same
Discharge Loading (US Customary) = Frd + Mrd/3	Same
Suction Loading (Metric) = Frs + Mrs*1.09	Same
Discharge Loading (Metric) = Frd + Mrd*1.09	Same

Where:

Forces are expressed lb_f or N and moments are expressed in lb_f•ft or N•m.

Forces and Moments are positive in the directions shown on Figure I-1.

Fx = Calculated total force in the x direction at the center of the pump.

Fxs = Force in the x direction applied to the suction nozzle.

Fxd = Force in the x direction applied to the discharge nozzle.

Mx = Calculated total moment about the x-axis at the center of the pump.

Mxs = Moment about the x-axis applied to the suction nozzle.

Frs = Resultant force applied to the suction.

Mrs = Resultant moment applied to the suction.

H = Vertical distance from the centerline of the pump to the top of the discharge flange.

L = Horizontal distance from the centerline of the discharge to the front of the suction flange.

M = Vertical distance from the centerline of the pump to the centerline of the suction on Unitized Self-priming pumps or the horizontal distance from the centerline of the pump to the centerline of the discharge on Recessed Impeller pumps.

These dimensions are listed in Figure I-4 and are shown in Figure I-5.

FIGURE I-4: Dimensional Data

	U.S. Customary (inches)			Metric (meters)		
Pump Size	H	L	M	H	L	M
1K1.5 x 1-6	6.5	4	0	0.165	0.102	0
1K3 x 1.5-6	6.5	4	0	0.165	0.102	0
1K3 x 2-6	6.5	4	0	0.165	0.102	0
1K1.5 x 1LF-4	6.5	4	0	0.165	0.102	0
1K1.5 x 1LF-8	6.5	4	0	0.165	0.102	0
11K1.5 x 1-8	6.5	4	0	0.165	0.102	0
1K3 x 1.5-8	7.5	4	0	0.191	0.102	0
2K3 x 2-8	9.5	4	0	0.241	0.102	0
2J4 x 3-8	11	4	0	0.279	0.102	0
2K2 x 1-10A	8.5	4	0	0.216	0.102	0
2J2 x 1LF-10	8.5	4	0	0.216	0.102	0
2K3 x 1.5-10A	8.5	4	0	0.216	0.102	0
2K3 x 2-10A	9.5	4	0	0.241	0.102	0
2K4 x 3-10	11	4	0	0.279	0.102	0
2K4 x 3-10H	12.5	4	0	0.318	0.102	0
2K6 x 4-10	13.5	4	0	0.343	0.102	0
2K6 x 4-10H	13.5	4	0	0.343	0.102	0
2K3 x 1.5-13	10.5	4	0	0.267	0.102	0
2K3 x 1.5LF-13	10.5	4	0	0.267	0.102	0
2K3 x 2-13	11.5	4	0	0.292	0.102	0
2K4 x 3-13	12.5	4	0	0.318	0.102	0
2K4 x 3-13HH	12.5	4	0	0.318	0.102	0
2K6 x 4-13A	13.5	4	0	0.343	0.102	0
3K8 x 6-14A	16	6	0	0.406	0.152	0
3K10 x 8-14	18	6	0	0.457	0.152	0
3K6 x 4-16	16	6	0	0.406	0.152	0
3K8 x 6-16A	18	6	0	0.457	0.152	0
3K10 x 8-16	19	6	0	0.483	0.152	0
3K10 x 8-16H	19	6	0	0.483	0.152	0
3K10 x 8-17	20	6	0	0.508	0.152	0
1J1x5 x 1US-6	7.25	4	2.5	0.184	0.102	0.064
1K1.5 x 1.5US-8	7.875	5	4	0.200	0.127	0.102
2K2 x 1.5US-10	10	5.25	4	0.254	0.133	0.102
2K3 x 2US-10	10.5	5.25	4	0.267	0.133	0.102
2K4 x 3US-10H	12.5	5.75	5	0.318	0.146	0.127
2K3 x 2US-13	12	5.25	4	0.305	0.133	0.102
2K4 x 3US-13	13.5	5.75	5	0.343	0.146	0.127
2K6 x 4US-13A	15	6	5	0.381	0.152	0.127
1J2 x 2R-6	6.5	3.25	2.75	0.165	0.083	0.070
2K2 x 2R-10	8.5	3.5	5.25	0.216	0.089	0.133
2K3 x 3R-10	9	4.25	5.125	0.229	0.108	0.130
2K4 x 3R-13	10.5	4.125	6.625	0.267	0.105	0.168
2K6 x 4R-13	11.5	4.75	6.625	0.292	0.121	0.168

Sealmatic versions have the same dimensions and allowable loads as the above standard pumps.

FIGURE I-5

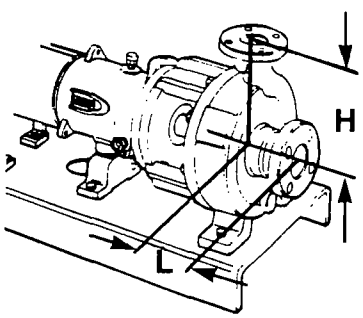

Standard, Lo-Flo, Sealmatic

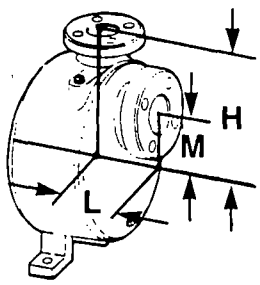

Unitized Self-Priming

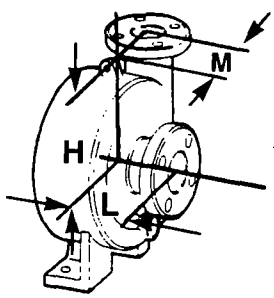

Recessed Impeller

APPENDIX J

ADDITIONAL SOURCES OF INFORMATION

The following are excellent sources for additional information on Durco MARK III pumps, and centrifugal pumps in general.

Pump Engineering Manual, R.E. Syska, J.R. Birk, The Duriron Company Inc., Dayton, Ohio, 1980.

Specification for Horizontal End Suction Centrifugal Pumps for Chemical Process, ASME B73.1M The American Society of Mechanical Engineers, New York, NY, 1991.

American National Standard for Centrifugal Pumps for Nomenclature, Definitions, Application and Operation, Hydraulic Institute, 9 Sylvan Way, Parsippany, New Jersey 07054-3802.

Durco Pump Parts Catalog

Durco MARK III Sales Bulletin

Durco MARK III Technical Bulletin

RESP73H Application of ASME B73.1M-1991, Specification for Horizontal End Suction Centrifugal Pumps for Chemical Process. Process Industries Practices, Construction Industry Institute, The University of Texas at Austin, 3208 Red River Street, Suite 300, Austin, Texas 78705.

Pump Handbook, 2nd edition, Igor J. Karassik et al, McGraw-Hill, Inc., New York, NY, 1986.

Centrifugal Pump Sourcebook, John W. Dufour and William E. Nelson, McGraw-Hill, Inc., New York, NY, 1993.

Pumping Manual, 9th edition, T.C. Dickenson, Elsevier Advanced Technology, Kidlington, United Kingdom, 1995.

THIS PAGE INTENTIONALLY LEFT BLANK

MARK III ANSI Process
Heavy-duty chemical service pump conforms to ASME B73.1M ANSI Standard design criteria and dimensions as well as to the design and requirements of ISO 5199.

Guardian®
Magnetic Drive ANSI
Features leading edge sealless pump technology to meet ANSI Class 150 and 300 lb operating criteria to 550°F (288°C) meets HI5.1-5.6 1992 standards.

NonMetallic ANSI
Proprietary solid FRP with optional patented lining processes offers excellent strength, corrosion resistance and economy.

AHLSTAR®
High volume pumping capacity to 30,000 gpm (6,818 m^3/h) for a wide range of process, plant utility and cooling applications.

CHEMSTAR® ISO
Exceeds the design and construction requirements of ISO 5199 for centrifugal pumps Class II, and the dimensional requirements of ISO 2858, BS5257, DIN 24256 and NFE 44121

Also available in magnetic drive design.

CHEMSTAR ISO and MARK III ANSI pumps provide similar advanced features and customer benefits for much of the total process industries.

THE WORLDWIDE
PUMP COMPANY

NonMetallic ANSI

CHEMSTAR ISO

ANSI/ISO Magnetic Drive

DURCO®

THE AMERICAS
The Duriron Company, Inc.
Rotating Equipment Group
Dayton, Ohio 45401
Telephone: 01-937-226-4000
Telefax: 01-937-226-4525

EUROPE
S.A. Durco Europe N.V.
6 rue de Geneve
B-1140 Brussels
Belgium
Telephone: 32-2-702-9600
Telefax: 32-2-702-9649

ASIA PACIFIC
Durco Valtek
(Asia Pacific) Pte. Ltd.
12 Tuas Avenue 20
Singapore 638824
Republic of Singapore
Telephone: 65-862-3332
Telefax: 65-862-2800

©The Duriron Company, Inc.
November 1996
Printed in U.S.A.

Installation, Operation And Care Of Reliance® Standard Integral Horsepower Induction Motors

- 180 – 449 Frames

A-C MOTORS

We're keyed to your need.

Instruction Manual B-3620-21

June, 1993

RELIANCE ELECTRIC

Table of Contents

RECEIVING AND HANDLING 1
- ACCEPTANCE 1
- EXTENDED STORAGE – A-C MOTORS, D-C MOTORS, GENERATORS AND SHIPBOARD MOTORS 1
- STORAGE CONDITIONS – SHORT TERM 1
- STORAGE PREPARATION 1
- FOR STORAGE OF EXTENDED PERIODS OF TIME (GREATER THAN 18 MONTHS) 2
- UNPACKING 2

INSTALLATION 3
- INSPECTION 3
- LOCATION 4
- LIFTING MEANS 4
- MOUNTING 4
- MOUNTING OF 6 & 8 HOLE MOTOR FRAMES 4
- DRIVE 4
- ROTATING PARTS 5
- SOME SATISFACTORY METHODS OF GUARDING 5
- GROUNDING 5
- STARTING 6
- DRAIN PLUGS 6
- ROTATION 6
- TEST FOR GENERAL CONDITION 6
- INITIAL LUBRICATION 6

OPERATION 7

MAINTENANCE AND REPAIR 8
- DISASSEMBLY 8
- REMOVING BRACKETS AND ROTOR 8
- REMOVING AND REPLACING BALL BEARINGS 8
- REASSEMBLY 8

LUBRICATION OF BEARINGS 9
- GREASE LUBRICATED BEARINGS 9
- RECOMMENDED LUBRICANT 9
- BALL BEARING MOTORS 9
- ROLLER BEARING MOTORS 9
- LUBRICATION PROCEDURE 9
- LUBRICATION INSTRUCTIONS 9
- SERVICE CONDITIONS 10
- LUBRICATION FREQUENCY 10
- LUBRICATION VOLUME 10

Table of Contents (continued)

REPLACEMENT BEARINGS **10**

PARTS IDENTIFICATION DRAWING **11**

TOTAL SERVICE PROGRAMS **12**
RENEWAL PARTS 12
ADDITIONAL LITERATURE 12

Reliance® is a trademark of Reliance Electric Company or its subsidiaries.

©Reliance Electric Company, 1993.

DANGER

ONLY QUALIFIED ELECTRICAL PERSONNEL FAMILIAR WITH THE CONSTRUCTION AND OPERATION OF THIS EQUIPMENT AND THE HAZARDS INVOLVED SHOULD INSTALL, ADJUST, OPERATE, AND/OR SERVICE THIS EQUIPMENT. READ AND UNDERSTAND THIS MANUAL IN ITS ENTIRETY BEFORE PROCEEDING. FAILURE TO OBSERVE THIS PRECAUTION COULD RESULT IN SEVERE BODILY INJURY OR LOSS OF LIFE.

The products described in this manual are manufactured by Reliance Electric Industrial Company.

RECEIVING AND HANDLING

ACCEPTANCE

Thoroughly inspect the equipment before accepting shipment from the transportation company. If any of the goods called for in the bill of lading or express receipt are damaged or the quantity is short, do not accept them until the freight or express agent makes an appropriate notation on your freight bill or express receipt. If any concealed loss or damage is discovered later, notify your freight or express agent at once and request him to make an inspection. We will be very happy to assist you in collecting claims for loss or damage in shipment; however, this willingness on our part does not remove the transportation company's responsibility in reimbursing you for collection of claims or replacement of material. Claims for loss or damage in shipment must not be deducted from the Reliance Electric invoice,nor should payment of the Reliance Electric invoice be withheld awaiting adjustment of such claims, as the carrier guarantees safe delivery.

If considerable damage has been incurred and the situation is urgent, contact the nearest Reliance Electric Sales Office for assistance. Please keep a written record of all communications.

EXTENDED STORAGE – A-C MOTORS, D-C MOTORS, GENERATORS AND SHIPBOARD MOTORS

If considerable damage has been incurred and the situation is urgent, contact the nearest Reliance Electric Sales Office for assistance. Please keep a written record of all communications.

STORAGE CONDITIONS – SHORT TERM

The following storage requirements must be followed:

1. Motors are to be kept in their original containers or provided with equivalent protection and stored in a warehouse free from extremes in temperature, humidity, and corrosive atmosphere.
2. If unusual vibrations exist at the storage location, the motor should be protected with isolation pads.
3. All breathers and drains are to be operable while in storage and/or the moisture drain plugs removed. The motors must be stored so the drain is at the lowest point.

STORAGE PREPARATION

Improper storage of electric machines will result in seriously reduced reliability of that equipment. For example, an electric motor that does not experience regular usage while being exposed to normally humid atmospheric conditions is likely to cause the bearings to rust or rust particles from surrounding surfaces to contaminate the bearings. The electrical insulation may absorb an excessive amount of moisture leading to the motor winding failing to ground. The following preparations should be followed:

1. Minimize condensation in and around the motor by use of desiccants or other humidity control methods.
2. Motor space heaters when specified are to be energized where there is a possibility that the storage ambient conditions will reach the dew point. Space heaters are an option.
3. Coat all external machined surfaces with a material to prevent corrosion. An acceptable product for this purpose is Exxon Rust Ban #392.
4. Measure and record the electrical resistance of the winding insulation with a megger or an insulation resistance meter. Minimum accepted Megohm level is the insulation kV rating +1 Megohm. If levels fall below the above, contact the nearest Reliance sales office. The recorded data will be required when removing from storage.

5. Some motors have a shipping brace attached to the shaft to prevent damage during transportation. The shipping brace, if provided, must be removed and stored for future use. The brace must be reinstalled to hold the shaft firmly in place against the bearing before the motor is moved.

6. Upon placing the motor into extended storage (greater than 3 months), the motors with regreasable bearings must be greased per Table 1 followed by the motor shaft being rotated a minimum of 15 times after greasing. Non-regreasable motors with "Do Not Lubricate" nameplate should also be rotated 15 times to redistribute grease within the bearing.

7. Remove the grease drain plug, if supplied, (opposite the grease fitting) on the bottom of each end bracket prior to lubricating the motor. Replace the plug after greasing.

Table 1. Lubrication Volume (Storage)

Frame Size	Vol. in Cubic In.
182 thru 215	0.5
254 thru 286	1.0
324 thru 365	1.5
404 thru 449	2.5

8. Regreasable bearings are to be greased per Table 1 at the time of being placed into extended storage. Motor shafts are to be rotated 15 revolutions manually every 3 months and additional grease added every nine months per Table 1 to each bearing. Bearings are to be greased at the time of removal from storage.

   Non-regreasable motors should have their shaft rotated 15 revolutions every 3 months.

9. All breather drains should be fully operable while in storage. The motors must be stored so the drain is at the lowest point. All breathers and automatic "T" drains must be operable to allow breathing at points other than through the bearing fits.

10. The space heaters when specified are to be connected and operable while in storage.

11. Windings are to be meggered at the time equipment is put in storage. Reference Para. 4 on page 1. At the time of removal from storage, the insulation resistance reading must not have dropped more than 50% from the initial reading. Any drop below this point necessitates electrical or mechanical drying. Refer to "Motor Drying Procedure."

12. Where motors are not stored in the original containers, but are removed and mounted on other pieces of machinery, the mounting must be such that the drains and breathers and space heaters are fully operable. In this respect, the drains must be kept at the lowes point in the motor so that all condensation can automatically drain out.

FOR STORAGE OF EXTENDED PERIODS OF TIME (GREATER THAN 18 MONTHS)

All requirements of general preparation and short term storage apply with the following additional requirements.

1. Motor is to be crated in a box similar to EXPORT BOXING but that the "shell" (sides & top of box) will be LAG-BOLTED to the wooden base (not nailed as export boxes are). This design will allow for the opening and reclosing the box many times without destroying the "shell".

2. The motor will be sealed in an airtight vapor barrier bag with desiccant inside. This airtight bag will give added protection during shipment of motor to the permanent storage area.

3. After the first "Inspection" for megger reading, turning the shaft, etc., the vapor bag should be re-sealed by taping it closed with masking or similar tape. Also add new desiccant inside bag before closing. The shell should then be placed over the motor and the lag bolts replaced.

4. If a "zipper-closing" type bag is used instead of the "heat-sealed" type bag, then rezipper the bag closed instead of taping it.

5. Be sure to add new desiccant inside bag after each periodic inspection.

6. Minimize the accumulation of condensed water in and around the machine.

UNPACKING

After unpacking and inspection to see that all parts are in good condition, turn the shaft by hand to be sure there are no obstructions to free rotation. Equipment which has been in storage for some time should be tested and relubricated (regreasable type) prior to being put into service. Refer to "Test General Condition" and "Lubrication" for procedure to be performed after extended storage.

Equipment with roller bearings is shipped with a shaft block at the opposite pulley end. In removing the shaft block, be sure to replace the bolts which are used to hold the shaft block in place during shipment.

DANGER

ONLY QUALIFIED ELECTRICAL PERSONNEL FAMILIAR WITH THE CONSTRUCTION AND OPERATION OF THIS EQUIPMENT AND THE HAZARDS INVOLVED SHOULD INSTALL, ADJUST, OPERATE, AND/OR SERVICE THIS EQUIPMENT. READ AND UNDERSTAND THIS MANUAL IN ITS ENTIRETY BEFORE PROCEEDING. FAILURE TO OBSERVE THIS PRECAUTION COULD RESULT IN SEVERE BODILY INJURY OR LOSS OF LIFE.

INSTALLATION

INSPECTION

After the motor is unpacked, examine the nameplate data to see that it agrees with the power circuit to which it is to be connected. The motor will operate with frequency not more than 5% and voltage not more than 10% above or below the nameplate data, or combined variation of voltage and frequency of not more than 10% above or below nameplate data. Efficiency, power factor and current may vary from nameplate data. Performance within these voltage and frequency variations will not necessarily be in accordance with the standards established for operation at rated voltage and frequency.

General Effect of Voltage and Frequency Variation on Standard Efficient Induction Motor Characteristics

Variation	Starting and maximum running torque	Synchronous speed	slip %	Full-Load Speed	Efficiency			Power Factor			Full-load current	Starting current	Temp rise, full load	Maximum overload capacity	Magnetic noise – no-load in particular
					Full-load	3/4 load	1/2 load	Full load	3/4 load	1/2 load					
Voltage Variation:															
120% Voltage	increase 44%	no change	decrease 30%	increase 1.5%	6-0% decrease (1-75 HP) 0-3% increase (100-300 HP)	decrease 1/2-2 points	decrease 7-20 points	decrease 5-15 points	decrease 10-30 points	decrease 15-40 points	increase 12%	increase 20%	increase 5-6°C. (1-75 HP) Decrease 3-4°C (100-300 HP)	increase 44%	Noticeable increase
110% voltage	increase 21%	no change	decrease 17%	increase 1%	slight decrease	practically no change	decrease 1-2 points	decrease 5-10 points	decrease 5 points	decrease 5-6 points	increase 2-4%	increase 10-12%	increase 3-4°C.	increase 21%	increase slightly
Function of Voltage	(voltage)^2	constant	$\frac{1}{(\text{voltage})^2}$	(synchronous speed slip)								voltage		(voltage)^2	
90% Voltage	decrease 19%	no change	increase 23%	decrease 1-1/2%	decrease 2 points	practically no change	increase 1-2 points	increase 5 points	increase 2-3 points	increase 4-5 points	increase 10-11%	decrease 10-12%	increase 6-7°C	decrease 19%	decrease slightly
Frequency variation:															
105% frequency	decrease 10%	increase 5%	practically no change	increase 5%	slight increase	slight increase	slight increase	slight increase	slight increase	slight increase	decrease slightly	decrease 5-6%	decrease slightly	decrease slightly	decrease slightly
Function of frequency	$\frac{1}{(\text{frequency})^2}$	frequency		(synchronous speed slip)								$\frac{1}{\text{frequency}}$			
95% frequency	increase 11%	decrease 5%	practically no change	decrease 5%	slight decrease	slight decrease	slight decrease	slight decrease	slight decrease	slight decrease	increase slightly	increase 5-6%	increase slightly	increase slightly	increase slightly
1 % phase unbalance	slight decrease	slight decrease		slight decrease	2% decrease			5-6% decrease			1-1/2% increase	slight decrease	2% increase		
2% phase unbalance	slight decrease	slight decrease		slight decrease	8% decrease			7% decrease			3% increase	slight decrease	8% increase		

NOTE: This table shows general effects, which will vary somewhat for specific ratings.

LOCATION

The motor should be installed in a location compatible with the motor enclosure and specific ambient.

To allow adequate air flow, the following clearances must be maintained between the motor and any obstruction:

TEFC-Enclosures	–
Fan Cover Air Intake	– 180–210T Framel 1" 250–449T Frame 4"
Exhaust	– Envelope equal to the "P" dimension on the motor dimension sheet
Protected Enclosures	–
Bracket Intake	– Same as TEFC
Frame Exhaust	– Exhaust out the sides-envelope a minimum of the "P" dimension plus 2". Exhaust out the end-same as intake.

LIFTING MEANS

WARNING

WHEN A LIFTING MEANS IS PROVIDED FOR HANDLING THE MOTOR OR GENERATOR, IT SHOULD NOT BE USED TO LIFT THE MOTOR OR GENERATOR PLUS ADDITIONAL EQUIPMENT SUCH AS GEARS, PUMPS, COMPRESSORS, OR OTHER DRIVEN EQUIPMENT. FAILURE TO FOLLOW THESE PRECAUTIONS COULD RESULT IN BODILY INJURY.

In the case of assemblies on a common base, any lifting means provided on the motor or generator should not be used to lift the assembly and base but, rather, the assembly should be lifted by a sling around the base or by other lifting means provided on the base. In all cases care should be taken to assure lifting in the direction intended in the design of the lifting means. Likewise, precautions should be taken to prevent hazardous overloads due to deceleration, acceleration or shock forces.

MOUNTING

Mount the motor on a foundation sufficiently rigid to prevent excessive vibration. Roller bearing and ball-bearing motors may be mounted with the shaft at any angle. Roller bearing motors are not suitable for coupled duty applications. After carefully aligning the motor with the driven unit, bolt securely in place.

When motors, which are normally mounted with the shaft in a horizontal position, are mounted vertically, it may be necessary to provide additional guards to prevent foreign objects from falling into the motor openings and striking rotating parts. Such guards may be obtained at the time of purchase or from a local service repair center.

Explosion proof motors are shipped from the factory with the conduit box mounted. If the conduit box is removed or rotated, a minimum of five (5) full threads of engagement on the motor pipe nipple must be maintained for explosion proof integrity of the conduit box.

Some motors have standardized frames containing 6 or 8 mounting holes. 6 hole frames are not suitable for field reversal of mounting from F-1 to F-2, etc. The following diagram indicates the proper mounting holes to use.

MOUNTING OF 6 & 8 HOLE MOTOR FRAMES

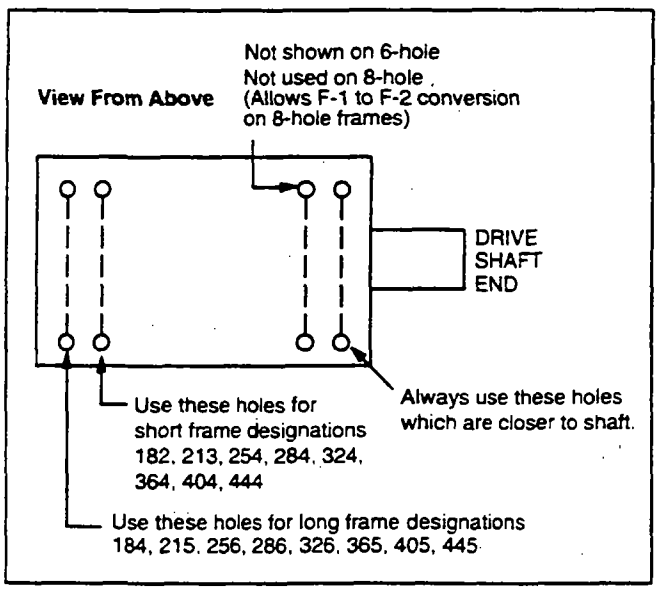

DRIVE

The pulley, sprocket, or gear used in the drive should be located on the shaft as close to the shaft shoulder as possible. Heat to install. Driving a unit on the shaft will damage the bearings.

Belt Drive: Align the pulleys so that the belt will run true; tighten the belt just enough to prevent slippage, any tighter will cause premature bearing failure. If possible, the lower side of the belt should be the driving side.

Chain Drive: Mount the sprocket on the shaft as close to the bracket as possible. Align the sprockets so that the chain will run true. Avoid excessive chain tension.

Gear Drive and Direct Connection: Accurate alignment is essential. Secure the motor and driven unit rigidly to the base.

ROTATING PARTS

WARNING

ROTATING PARTS, SUCH AS COUPLINGS, PULLEYS, EXTERNAL FANS, AND UNUSED SHAFT EXTENSIONS, SHOULD BE PERMANENTLY GUARDED AGAINST ACCIDENTAL CONTACT WITH HANDS OR CLOTHING. THIS IS PARTICULARLY IMPORTANT WHERE THE PARTS HAVE SURFACE IRREGULARITIES SUCH AS KEYS, KEYWAYS OR SET SCREWS. FAILURE TO OBSERVE THIS PRECAUTION COULD RESULT IN BODILY INJURY.

SOME SATISFACTORY METHODS OF GUARDING ARE:

1. Covering the machine and associated rotating parts with structural or decorative parts of the driven equipment.
2. Providing covers for the rotating parts. Covers should be sufficiently rigid to maintain adequate guarding in normal service.

DANGER

THE USER IS RESPONSIBLE FOR CONFORMING WITH THE NATIONAL ELECTRICAL CODE AND ALL OTHER APPLICABLE LOCAL CODES. WIRING PRACTICES, GROUNDING DISCONNECTS AND OVERCURRENT PROTECTION ARE OF PARTICULAR IMPORTANCE. FAILURE TO OBSERVE THESE PRECAUTIONS COULD RESULT IN SEVERE BODILY INJURY OR LOSS OF LIFE.

DANGER

SUBSEQUENT STEPS REQUIRE ROTATING PARTS AND/OR ELECTRICAL CIRCUITS TO BE EXPOSED. STAY CLEAR IF UNIT MUST BE RUNNING OR DISCONNECT AND LOCKOUT OR TAG POWER SOURCE IF CONTACT MUST BE MADE.

Connect the motor to the power supply according to the diagram on the motor nameplate. For most 230/460 volt motors, nine leads are brought out from the stator windings so that the motor may be connected for either 230 or 460 volts.

GROUNDING

See the *National Electrical Code*, Article 430 for information on grounding of motors, Article 445 for grounding of generators, and Article 250 for general information on grounding. In making the ground connection, the installer should make certain that there is a solid and permanent metallic connection between the ground point, the motor or generator terminal housing, and the motor or generator frame.

Motors with resilient cushion rings usually must be provided with a bonding conductor across the resilient member. Some motors are supplied with the bonding conductor on the concealed side of the cushion ring to protect the bond from damage. Motors with bonded cushion rings should usually be grounded at the time of installation in accordance with the above recommendations for making ground connections. When motors with bonded cushion rings are used in multimotor installations employing group fusing or group protection, the bonding of the cushion ring should be checked to determine that it is adequate for the rating of the branch circuit overcurrent protective device being used.

There are applications where grounding the exterior parts of a motor or generator may result in greater hazard by increasing the possibility of a person in the area simultaneously contacting ground and some other nearby live electrical parts of other ungrounded electrical equipment. In portable equipment it is difficult to be sure that a positive ground connection is maintained as the equipment is moved, and providing a grounding conductor may lead to a false sense of security.

DANGER

WHEN CAREFUL CONSIDERATION OF THE HAZARDS INVOLVED IN A PARTICULAR APPLICATION INDICATE THE MACHINE FRAMES SHOULD NOT BE GROUNDED OR WHEN UNUSUAL OPERATING CONDITIONS DICTATE THAT A GROUNDED FRAME CANNOT BE USED, THE INSTALLER SHOULD MAKE SURE THE MACHINE IS PERMANENTLY AND EFFECTIVELY INSULATED FROM GROUND. IN THOSE INSTALLATIONS WHERE THE MACHINE FRAME IS INSULATED FROM GROUND, IT IS RECOMMENDED THAT APPROPRIATE WARNING LABELS OR SIGNS BE PLACED ON OR IN THE AREA OF THE EQUIPMENT BY THE INSTALLER. FAILURE TO OBSERVE THESE PRECAUTIONS COULD RESULT IN SEVERE BODILY INJURY OR LOSS OF LIFE.

STARTING

WARNING

BEFORE STARTING MOTOR, REMOVE ALL UNUSED SHAFT KEYS AND LOOSE ROTATING PARTS TO PREVENT THEM FROM FLYING OFF. FAILURE TO OBSERVE THIS PRECAUTION COULD RESULT IN BODILY INJURY.

CAUTION

Check direction of motor rotation before coupling motor to load. Failure to observe this precaution could result in damage to or destruction of the equipment.

Before starting the motor, check the following items:

1. The rotor should turn freely when disconnected from the load.
2. Driven machine should be unloaded when first starting the motor.

The motor should run smoothly with little noise. If the motor should fail to start and produces a decided hum, it may be that the load is too great for the motor or that it has been connected improperly. Shutdown immediately and investigate for trouble.

DRAIN PLUGS

If motor is totally enclosed fan-cooled or non-ventilated it is recommended that condensation drain plugs be removed. These are located in the lower portion of the end-shields. Totally enclosed fan-cooled "XT" motors are equipped with automatic drains which should be left in place as received.

ROTATION

To reverse the direction of rotation, disconnect from power source and interchange any two of the three line leads for the three-phase motors.

TEST FOR GENERAL CONDITION

If the motor has been in storage for an extensive period or has been subjected to adverse moisture conditions, it is best to check the insulation resistance of the stator winding with a megohmeter.

If the resistance is lower than one megohm the windings should be dried in one of the two following ways:

1. Bake in oven at temperatures not exceeding 90°C. until insulation resistance becomes constant.
2. With rotor locked, apply low voltage and gradually increase current through windings until temperature measured with thermometer reaches 194°F. Do not exceed this temperature.

INITIAL LUBRICATION

Reliance motors are shipped from the factory with the bearings properly packed with grease and ready to operate. Where the unit has been subjected to extended storage (6 months or more) the bearings should be relubricated (regreasable type) prior to starting. When motors are equipped for oil mist lubrication refer to Instruction Manual B-3654.

OPERATION

WARNING

SURFACE TEMPERATURES OF MOTOR ENCLOSURE MAY REACH TEMPERATURES WHICH CAN CAUSE DISCOMFORT OR INJURY TO PERSONNEL ACCIDENTALLY COMING INTO CONTACT WITH HOT SURFACES. WHEN INSTALLING, PROTECTION SHOULD BE PROVIDED BY USER TO PROTECT AGAINST ACCIDENTAL CONTACT WITH HOT SURFACE. FAILURE TO OBSERVE THIS PRECAUTION COULD RESULT IN BODILY INJURY.

WARNING

ROTATING PARTS, SUCH AS COUPLINGS, PULLEYS, INTERNAL-EXTERNAL FANS AND UNUSED SHAFT EXTENSIONS SHOULD BE PERMANENTLY GUARDED AGAINST ACCIDENTAL CONTACT WITH HANDS OR CLOTHING. FAILURE TO OBSERVE THIS PRECAUTION COULD RESULT IN BODILY INJURY.

Due to the inherent characteristics of insulating materials, abnormally high temperatures shorten the operating life of electrical apparatus. The total temperature, not the temperature rise, should be the measure of safe operation. The class of insulation determines the maximum safe operating temperature. Aging of insulation occurs at an accelerated rate at abnormally high temperatures. A general rule for gauging the effect of excessive heat is that for each 10°C. rise in temperature above the maximum limit for the insulation, the life of the insulation is halved.

Unbalanced voltage or single-phase operation of polyphase machines may cause excessive heating and ultimate failure. It requires only a slight unbalance of voltage applied to a polyphase motor to cause large unbalance currents and resultant overheating.

Periodic checks of phase voltage, frequency and power consumption of a motor while in operation are recommended; such checks assure the correctness of frequency and voltage applied to the motor and yield an indication of the load offered by the apparatus which the motor drives.

Comparisons of this data with previous no-load and full-load power demands will give an indication of the performance of the complete machine. Any serious deviations should be investigated and corrected.

Stator troubles can usually be traced to one of the following causes:

Worn bearings	Operating single-phase
Moisture	Poor insulation
Overloading	Oil and dirt

Dust and dirt are usually contributing factors. Some forms of dust are highly conductive and contribute materially to insulation breakdown. The effect of dust on the motor temperature through restriction of ventilation is a principal reason for keeping the windings clean.

Squirrel-cage rotors are rugged and, in general, give little trouble. The first symptom of a defective rotor is lack of torque. This may cause a slowing down in speed accompanied by a growling noise or perhaps failure to start the load.

This is caused by an open or high resistance joint in the rotor bar circuit. Such a condition can generally be detected by looking for evidence of localized heating.

MAINTENANCE AND REPAIR

WARNING

TO INSURE THAT THE DRIVEN EQUIPMENT IS NOT UNEXPECTEDLY STARTED, TURN OFF AND LOCKOUT OR TAG POWER SOURCE BEFORE PROCEEDING. FAILURE TO OBSERVE THESE PRECAUTIONS COULD RESULT IN BODILY INJURY

The fundamental principle of electrical maintenance is KEEP THE APPARATUS CLEAN AND DRY. This requires periodic inspection of the motor, the frequency depending upon the type of motor and the service.

The following should be checked at regular intervals:

WARNING

DO NOT USE GASOLINE OR OTHER FLAMMABLE SOLVENTS WHEN CLEANING THE MOTOR. FAILURE TO OBSERVE THIS PRECAUTION COULD RESULT IN BODILY INJURY.

1. Windings should be dry and free of dust, grease, oil, and dirt. Windings may be cleaned by suction cleaners or by wiping. Nozzles on suction type cleaners should be non-metallic. Gummy deposits of dirt and grease may be removed by using a commercially available low volatile solvent.
2. Terminal connections, assembly screws, bolts and nuts should be tight. They may loosen if motor is not securely bolted and tend to vibrate.
3. Insulation resistance of motors in service should be checked periodically at approximately the same temperature and humidity conditions to determine possible deterioration of the insulation. When such measurements at regular intervals indicate a wide variation, the cause should be determined. Motor should be reconditioned if the motor has been subjected to excessive moisture by re-winding or re-insulating if necessary. Enclosed motors require very little attention. Be sure that external air chamber of fan-cooled motors does not become clogged with foreign material which will restrict passage of air.

DISASSEMBLY

If it becomes necessary to disassemble the motor, care should be taken not to damage the stator windings as the insulation may be injured by improper or rough handling.

Precautions to keep bearings clean should be exercised. Before removing either end shield:

1. Disconnect motor from power source. Tag the leads to insure proper reconnection.
2. Remove motor from mounting base.
3. Mark end brackets relative to position on frame so they can be easily replaced.

REMOVING BRACKETS AND ROTOR

4. Remove bearing cartridge nuts or screws. (If used)
5. Remove front end bracket bolts.
6. Pull bracket.
7. Remove back end bracket in same manner.
8. Remove rotor.

REMOVING AND REPLACING BALL BEARINGS

BEARINGS SHOULD NOT BE REMOVED UNLESS THEY ARE TO BE REPLACED. WHEN REMOVAL IS NECESSARY, USE A BEARING PULLER. A BEARING PULLER MAY BE RIGGED BY USING A METAL PLATE, WITH HOLES DRILLED TO MATCH THE TAPPED HOLES IN THE INNER CAP. USE CARE TO KEEP THE PRESSURE EQUAL TO PREVENT BREAKING THE CAP.

TO INSTALL A BEARING, HEAT THE BEARING IN AN OVEN AT 250°F. THIS WILL EXPAND THE INNER RACE, ALLOWING IT TO SLIP OVER THE BEARING SEAT. ALL BEARINGS MUST BE REPLACED WITH THE IDENTICAL PART USED BY RELIANCE. IN MANY CASES SPECIAL BEARINGS ARE USED WHICH CANNOT BE IDENTIFIED BY MARKINGS ON BEARING. IN ALL CASES, WHEN REPLACING BEARINGS, USE MARKINGS ON BEARINGS AND MOTOR IDENTIFICATION NUMBER TO OBTAIN CORRECT REPLACEMENT BEARING.

THE MAJORITY OF BEARINGS USED NOW HAVE A C3 INTERNAL FIT.

REASSEMBLY

Follow reverse procedure as outlined for Disassembly. Having marked the brackets in the original position, replace as marked.

LUBRICATION OF BEARINGS

Motors covered by this Instruction Manual are equipped with several types of bearings. This description covers regreasable anti-friction bearings only. Non-regreasable ball bearings require no periodic maintenance. See I/M B-3654 for oil mist lubricated anti-friction bearing procedures.

GREASE LUBRICATED BEARINGS

This motor has been properly lubricated at the time of manufacture and it is not necessary to lubricate at time of installation unless the motor has been in storage for a period of six months or more.

Lubrication of anti-friction bearings should be done as a part of a planned maintenance schedule. The Recommended Lubrication Interval should be used as a guide to establish this schedule.

Cleanliness is important in lubrication. Any grease used to lubricate anti-friction bearings should be fresh and free from contamination. Similarly, care should be taken to properly clean the grease inlet area of the motor to prevent grease contamination.

RECOMMENDED LUBRICANT

For motors operating in ambient temperatures shown below, use the following lubricant or its equal:

BALL BEARING MOTORS

OPERATING TEMP. –25°C (–15°F) to 50°C (120°F)

CHEVRON OIL	SRI NO. 2
EXXON	UNIREX N2
SHELL OIL CO.	DOLIUM R
TEXACO, INC.	PREMIUM RB

MINIMUM STARTING TEMPERATURE –60°C (–76°F)

SHELL OIL CO.	AEROSHELL 7

ROLLER BEARING MOTORS

OPERATING TEMP.–25°C (–1 5°F) to 50°C (120°F)

CHEVRON OIL	BLACK PEARL EP NO. 2
TEXACO, INC.	PREMIUM RB

LUBRICATION PROCEDURE

Reliance anti-friction bearings may be lubricated with the motor running or stationary. Stationary with the motor warm is preferred.

1. Locate the grease inlet, clean the area and replace the pipe plug with a grease fitting, if the motor is not equipped with grease fittings.
2. If motor is equipped with grease drain plug, remove plug and loosen any hardened grease that may block drain.
3. Add the Recommended Volume of the Recommended Lubricant using a hand operated grease gun.
4. Run the motor for two hours.
5. Replace the pipe plug in grease drain.
6. Grease may not relieve from drain. Use only volume shown in Table 3.

LUBRICATION INSTRUCTIONS

1. Select Service Condition from Table 1.
2. Select Lubrication Frequency from Table 2.
3. Select Lubrication Volume from Table 3.
4. Lubricate the motor at the required frequency with the required lubricant volume in accordance with LUBRICATION PROCEDURE.

NOTE: Mixing lubricants is not recommended due to possible incompatibility. If it is desired to change lubricant, follow instructions for lubrication and repeat lubrication a second time after 100 hours of service. Care must be taken to look for signs of lubricant incompatibility, such as extreme soupiness visible from the grease relief drain area, or from the shaft opening.

SERVICE CONDITIONS

Table 1

Standard Conditions	Eight hours per day, normal or light loading, clean @ 40°C (100°F) maximum ambient.
Severe Conditions	Twenty-four hour per day operation or shock loading, vibration, or in dirt or dust @ 40–50°C (100–120°F) ambient
Extreme Conditions	Heavy shock or vibration, or dust.

LUBRICATION FREQUENCY

Table2

BALL BEARINGS				
Speed	Frame	Standard Conditions	Severe Conditions	Extreme Conditions
1800 RPM and Slower	182 Thru 215	3 Years	1 Year	6 Months
	254 Thru 365	2 Years	6 to 12 Months	3 Months
	404 Thru 449	1 Year	6 Months	1 to 3 Months
3600 RPM	ALL	6 Months	3 Months	1 Month
ROLLER BEARINGS				
For Roller Bearings divide the time periods above by 2.				

LUBRICATION VOLUME

Table3

Frame Size	Volume in Cubic Inches	
	1800 RPM And Slower	3600 RPM
182 Thru 215	0.5	0.5
254 Thru 286	1.0	1.0
324 Thru 365	1.5	1.5
404 Thru 449	2.5	1.5

REPLACEMENT BEARINGS

Your maintenance program will not be complete without including spare bearings. It must be remembered that the bearing is a wearable component and therefore must eventually be replaced. To insure that you are able to maintain original operation, **we recommend the purchase of spares directly from Reliance Electric.**

All bearings used in Reliance motors are subject to exact specifications and tests necessary to satisfy performance requirements. In this manner, it is possible to duplicate your present bearing. Markings on the bearing do not indicate complete specifications.

PARTS IDENTIFICATION DRAWING

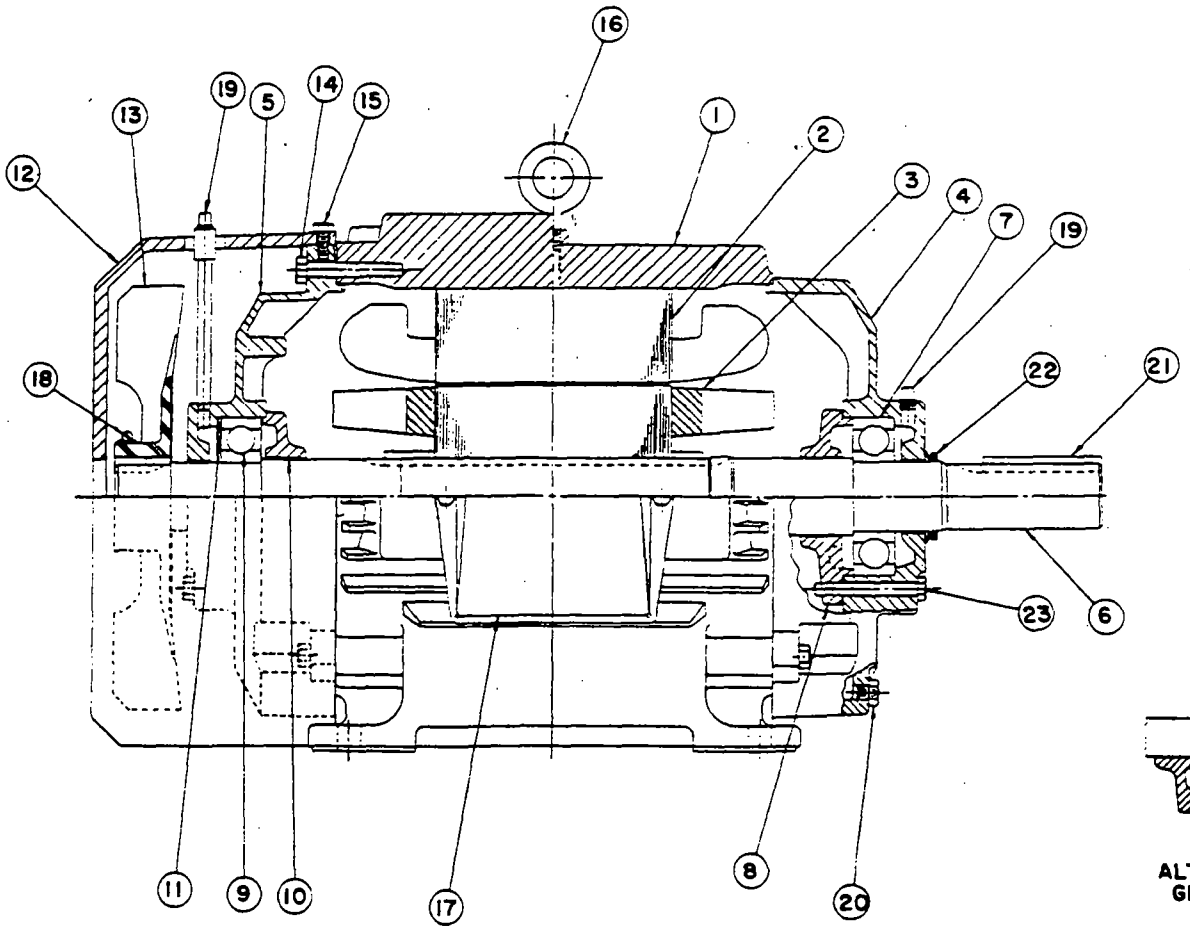

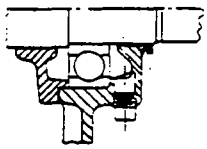

ALTERNATE VIEW
GREASE DRAIN

FIND NO.	PART DESCRIPTION
1	FRAME
2	STATOR
3	ROTOR
4	BACKEND BRACKET
5	FRONTEND BRACKET
6	SHAFT
7	BACKEND BALL BEARING
8	BACKEND INNER CAP
9	FRONTEND BALL BEARING
10	FRONTEND INNER CAP
11	WAVE WASHER, FRONTEND
12	FAN COVER
13	OUTER FAN

FIND NO.	PART DESCRIPTION
14	FRONT END BRACKET BOLTS
15	FAN COVER BOLTS
16	EYEBOLT
17	CONDUIT BOX
18	FAN CLAMP
19	GREASE ENTRY
20	CONDENSATION DRAIN
21	KEY
22	SLINGER
23	BACKEND CAP BOLTS

NOTE: Bearings shown are regreasable type.

TOTAL SERVICE PROGRAMS

Reliance Electric can provide a wide range of maintenance programs to help you reduce downtime, improve productivity and increase profits. Capabilities include:

- Motor Start-Up Service
- Motor Electrical and Mechanical Preventive Maintenance
- Vibration Analysis
- Mobile Van Repair Service
- Balancing and Alignment Service
- Maintenance Schools
- 24-Hour Technical Support
- Modernization Service

For more information contact your local Reliance Electric Sales Office or write:

Reliance Electric
Industrial Services
24701 Euclid Avenue
Cleveland, Ohio 44117

RENEWAL PARTS

An adequate stock of factory-made renewal parts is an integral part of a sound maintenance program to protect against costly downtime.

Parts can be obtained from your nearest Reliance Electric parts distributor, or directly from the Reliance Electric factory. When ordering parts for which a part number is not available, give complete description of part and purchase order number, serial number, model number, etc., of the equipment on which the part is used.

A detailed parts list, which gives Reliance Electric recommendations for spare parts that should be stocked for your equipment, can be ordered from:

1. Nearest Reliance Electric Sales Office
2. Nearest Reliance Electric Keyparts Distributor
3. Reliance Electric Renewal Parts, Cleveland, Ohio

Be sure to include complete nameplate data-purchase order number, serial number, rating, etc. – for your equipment when ordering the spare parts list.

For the telephone number of your local Keyparts Stocking distributor call 1-800-321-2795 or in Ohio call 216-266-7222.

ADDITIONAL LITERATURE

Additional literature covering the maintenance of A-C motors can be obtained from the Reliance Electric Services Division. Requests should be submitted through your nearest Reliance Electric Sales Office.

Reliance® is a trademark of Reliance Electric Company or its subsidiaries.

©Copyright Reliance Electric Company, 1993.

Service Centers

ALABAMA
Birmingham Service Center
3100 Pinson Valley Parkway
Birmingham, Alabama 35217
205-841-8377

ARIZONA
Phoenix Service Center
3550 S.16th Street
Phoenix, Arizona 85040
602-243-1791

CALIFORNIA
Anaheim Service Center
1025 North Sabina Street
Anaheim, California 92801
714-772-4773

San Jose Service Center
341 North Montgomery Street
San Jose, California 95110
408-287-4060

COLORADO
Tree Electric Service Center
1020 South Lipan Street
Denver, Colorado 80223
303-935-4615

ILLINOIS
Chicago Service Center
17001 South Vincennes Avenue
Thornton (Chicago), Illinois 60476
312-877-5310

LOUISIANA
Monroe Service Center
2304 Ruffin Drive
Monroe, Louisiana 71203
318-322-1474

Shreveport Service Center
1245 North Hearne
Shreveport, Louisiana 71107
318-222-9431

MEXICO SERVICE CENTER
Avenida Primero de Mayo 230
Naucalpan de Juarez
Estado de Mexico C.P. 53630
(52)(5) 576-6984

OHIO
Cleveland Service Center
4950 East 49th Street
Cleveland, Ohio 44125
216-266-7274

Cincinnati Service Center
350 Dayton Street
Hamilton, Ohio 45011
513-863-8816

OREGON
Portland Service Center
2315 N.W. 21st Place
Portland, Oregon 97210
503-226-4951

PENNSYLVANIA
Philadelphia Service Center
3240 South 78th Street
Philadelphia, Pennsylvania 19153
215-365-1500

Pittsburgh Service Center
320 Museum Road
Washington, Pennsylvania 15301
412-225-2900

SOUTH CAROLINA
Rock Hill Service Center
1332 Firetower Road
Rock Hill, South Carolina 29730
803-324-3700

TEXAS
Houston Service Center
1500 E. Main Street
LaPorte, Texas 77571
713-471-4611

WYOMING
Gillette Service Center
811 Edwards Road
Gillette, Wyoming 82716
307-682-0035

Rock Springs Service Center
839 Elk
Rock Springs, Wyoming 82901
307-362-6697

For a complete listing of all Reliance Authorized Service Centers, call 1-800-321-2795 or in Ohio call 1-216-266-2688.

Reliance Electric / 24701 Euclid Avenue / Cleveland, Ohio 44117 / (216) 266-7000

RELIANCE ELECTRIC

SECTION 2

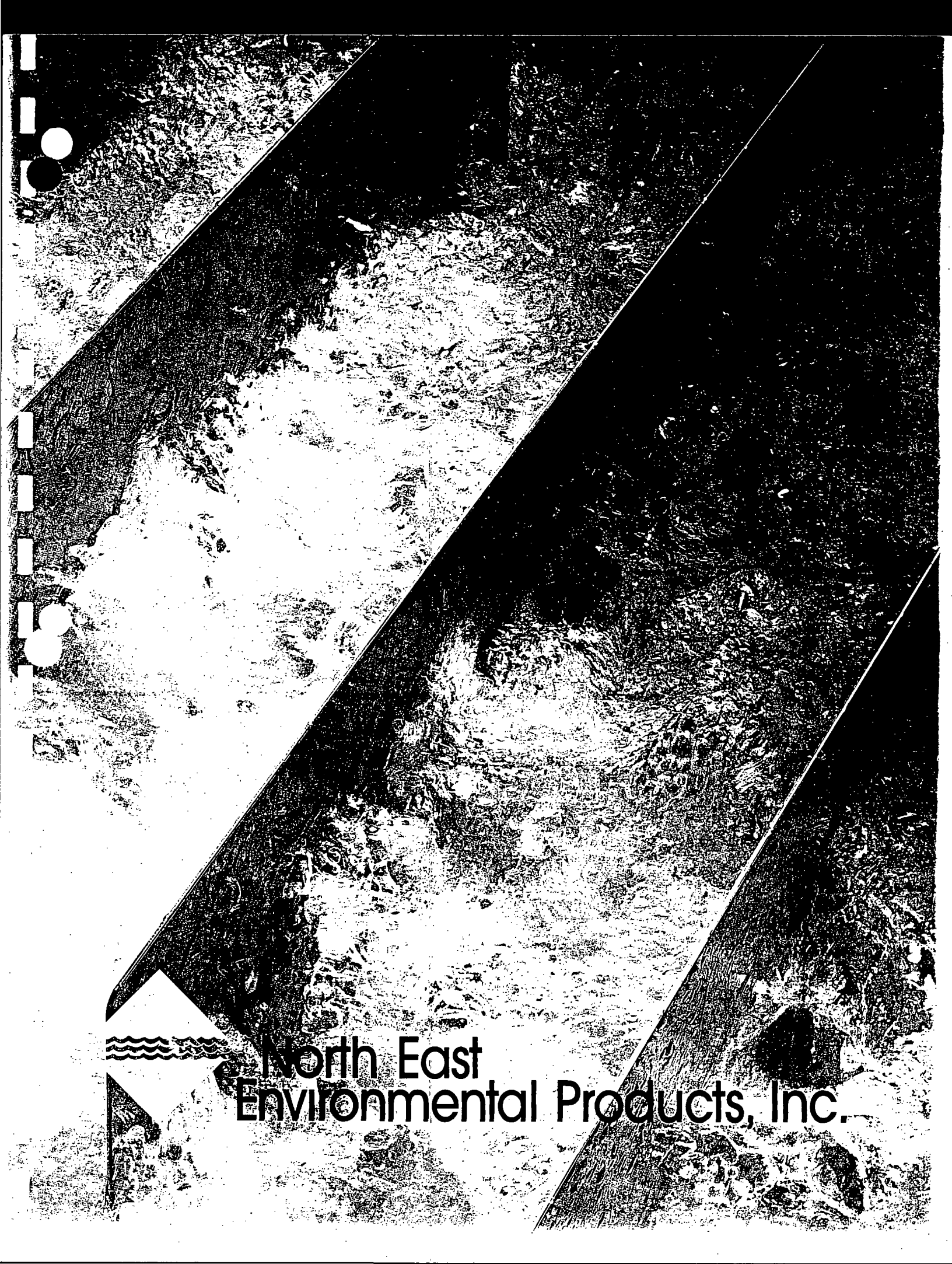
North East
Environmental Products, Inc.

INSTALLATION, OPERATION AND MAINTENANCE MANUAL

ShallowTray Aeration System

North East Environmental Products Inc.

Serial # 3651-06-4934

TABLE OF CONTENTS

Components List ..... **Section 1**

ShallowTray Low Profile Air Stripping System ..... **Section 2**

The ShallowTray Process **2-1**

The ShallowTray Basic System **2-3**

ShallowTray Components **2-8**

Operating Instructions ..... **Section 3**

Special Cautions **3-1**

Equipment Set-up **3-3**

Initial Start-Up **3-8**

Routine Operation **3-11**

Cleaning Procedures ..... **Section 4**

Troubleshooting ..... **Section 5**

Drawings ..... **Section 6**

Component Information ..... **Section 7**

Special Cautions!

Prior to start-up:

- ***Connect the Interlock Switches.***

  Connect the High Water Level Interlock, the Low Air Pressure/Vacuum Interlock, and the High Air Pressure/Vacuum Interlock (if required).

  It is important that a qualified, licensed electrician perform these installations.

- ***Fill the Sump Tank and Aeration Tray Inlet Chambers.***

  Fill the sump tank to a depth of at least 5 inches (12.7cm), and fill the seal pots on each tray. Use clean water only.

  Please see Equipment Set-up in the Operating Instructions section of this manual.

North East Environmental Products, Inc.
17 Technology Drive
West Lebanon, NH 03784
603-298-7061 Fax: 603-298-7063

ShallowTray is protected under U.S. Patent No. 5,045,215 and 5,240,595. Other international patents pending.

ShallowTray is a registered trademark of North East Environmental Products, Inc.
All other brands and products are trademarks of their respective holders.
© 1993, 1996 North East Environmental Products, Inc.

Section 1: Components List

ShallowTray Serial #: 3651-06-4939 Customer: HERITAGE ENVIRONMENTAL Ship date: 4/23/97

Engineered By: RC Order Date: 2/12/97 66012785

Design Review: Engineering RC 2-17-97 Sales DAS 2/17/97

Treatment Equipment:

Vaporizate Serial #: _____ Neozone Serial #: _____ EconoPump Serial #: _____

Special Components / Requirements / Information / Comments

SUBMITTAL APPROVAL REQUIRED - SUBMITT 5 COPIES BY 2/20/97
INSTRUMENT IDENTIFICATION TAGS & EQUIPMENT IDTAGS (6 TOTAL)
ONE DAY STARTUP
STAINLESS DISCHARGE STACK Ø 10" 12' LONG
DROP BLOWER INTO FRAME

II. Design Criteria

Design Water Flow Rate: 120 gpm

Maximum Water Flow Rate: 160 gpm, which is considered a ___ Low Water Flow Design, or ✓ a High Water Flow Design, and is based on the blower model selection.

Weir Height: 4" Inlet, 2" Outlet

Equipment Power Requirements: 3 Ø, 460 volts, 60 Hz

INSTALL ALL EQUIPMENT PER APPLICABLE NATIONAL AND LOCAL CODES.
CUSTOMER TO PROTECT EXPLOSION-PROOF MOTORS FROM RAIN.

III. Basic System Components

CAUTION: MAXIMUM PRESSURE OR VACUUM ACROSS STAINLESS STEEL SYSTEM = 32" WC

✓ Sump Tank, Cover — ✓ 304L stainless steel ___ 316L stainless steel

5 Aeration Trays (quantity) — ✓ 304L stainless steel ___ 316L stainless steel

✓ Latches — 304L stainless steel

✓ Main Blower (with inlet screen and damper) — AMERICAN Fan Model # BC3-06-22A

Minimum Required Blower Performance: 900 cfm @ 26 "wc — Blower P/N 100-00444

10 hp, 3 Ø, 460 volts, 3450 rpm — Coupling P/N 150-00150

60 Hz, ✓ TEFC or ___ EXP — Riser P/N _____

6 "Blower Inlet Size, 6 "Blower Outlet Size

✓ Blower on Inlet (Pressure system)

___ Blower on Outlet (Vacuum system)

___ Blowers on In & Out (Combo system)

Main Blower Sized For:
26 "wc required for ShallowTray Air Stripper
0 "wc additional available for airstream equipment

✓ Demister Pad — Koch style 4310, 4" thick, 304 ss

___ Spray Nozzle — Hollow cone, 90° pattern, sized for 15 psi, brass

✓ Sight Tube — Brass, Nalgene tubing

✓ Aeration Tray Gaskets — High density nitrile sponge rubber

✓ Inlet Piping Connection — Schedule 80 PVC, Brass

✓ Blower and Vent Line Connections — Flexible rubber couplings

✓ GRAVITY INLET TUBE

✓ Frame	3 in. and 4 in. welded steel, C-Channel
✓ Air Pressure Gauge (0 - 40 "wc)	Dwyer Magnehelic 2000 series
✓ Gravity Discharge Riser	PVC 80 Piping, with vacuum relief valve
___Additional Blower (with inlet screen and damper)	_____ Fan Model #_____
Required Performance	_____cfm @ _____" wc Blower P/N_____
	____hp, ____Ø, _____volts, _____rpm, _____ Hz, ____TEFC or ____EXP
	____"Blower Inlet Size, ____"Blower Outlet Size
___Feed Pump	_____ Pump Model #_____
Required Performance	_____ gpm @ _____' TDH Feed Pump P/N_____
	____hp, ____Ø, _____volts, _____rpm, _____ Hz, ____TEFC or ____EXP
	Port Sizes: _____ inch inlet, _____ inch outlet. Impellor Size _____ inches
___Discharge Pump	_____ Pump Model #_____
Required Performance	_____ gpm @ _____' TDH Discharge Pump P/N_____
	____hp, ____Ø, _____volts, _____rpm, _____ Hz, ____TEFC or ____EXP
	Port Sizes: _____ inch inlet, _____ inch outlet. Impellor Size _____ inches
___ Main Disconnect Switch	Integral with electrical enclosure, rotary style
___Control Panel	Motor starters, system alarm interlock circuit, operator switches, alarm light, NEMA _____ Enclosure, _____ Amps, _____Ø, _____Volts, _____Hz, _____ wire and ground
___Control Panel w/ Pump Level Control	Motor starters, system alarm interlock circuit, pump level control circuit, operator switches, alarm light, NEMA _____ Enclosure, _____ Amps, _____Ø, _____Volts, _____Hz, _____ wire and ground
___PurgePanel ™	NEMA 7 Main Disconnect switch, NEMA 4 enclosure, air pressure gauge, Low air pressure switch, Blower (100 cfm @ 2" w.c.)
___Autodialer	*Sensaphone 4100*
___Control Circuit Transformer	_____:120vac
__Intrinsically-Safe Relay	_____ Pepperl+Fuchs, WE77/Ex2-UL repeater relay Dual Channel, SPDT relay output _____Warrick 27A1E0 latching relay Single Channel, SPDT relay output
___Intermittent Operation	Blower time-delay circuit added to panel design. Blower shuts off 5 minutes after inlet water flow stops.
___Auto Operation	# of wells _____
___Well Probes	Warrick, series 3Y, 60' cord
___Blower Start/Stop Switch	Local blower switch mounted near blower
___Power Lapse Indicator	Black-out / Brown-out indicating light, switch and circuit added to panel design
___Individual Alarm Light	Light and relay circuit added to panel design
___Strobe Alarm Light	___Red, ___ Blue. Federal Signal, NEMA 4, UL listed
___Alarm Horn	Federal Signal
✓ Low Air ✓ Press. ___Vacuum Switch	Dwyer 1950-1, preset at 1.6" wc (range=0.3"wc to1.6" wc), Explosion-proof
___High Air ___Press. ___Vacuum Switch	Dwyer 1950, _____"wc to _____"wc, Explosion-proof
___Low Water Level Alarm Float Switch	Mechanical, SJ Electro, (qty)____N.O., (qty)____N.C.
✓ High Water Level Alarm Float Switch	Mechanical, SJ Electro, (qty)____N.O., (qty)1____N.C.
2 Discharge Pump Float Switch	Mechanical, SJ Electro. (qty)2 N.O., (qty)____N.C. (SHIP SEPARATE)
___Water Flow Meter	Halliburton, MCII digital readout
___Air Flow Meter	Dwyer 2000-0 meter, single-point insertion pitot tube, mounting kit
___Water Press. Gauge,___inlet, ___outlet	Dial gauge, liquid-filled
___Water Temp. Gauge,___inlet, ___outlet	Dial gauge
___Line Sampling Port, ___inlet, ___outlet	Schedule 80 PVC
__Air Blower Silencer	Clevaflex, CSA series
✓ Washer Wand	Nozzle, Elbow, 1/4" steel pipe
___Viewport Set - (1) 4"Ø, (1) 8"Ø	Lexan viewports with rubber coupling

Section 2: ShallowTray System

The ShallowTray Process

Air is vented to the atmosphere or to vapor phase treatment of choice.

Water travels around the full length of the baffled tray, becoming progressively cleaner.

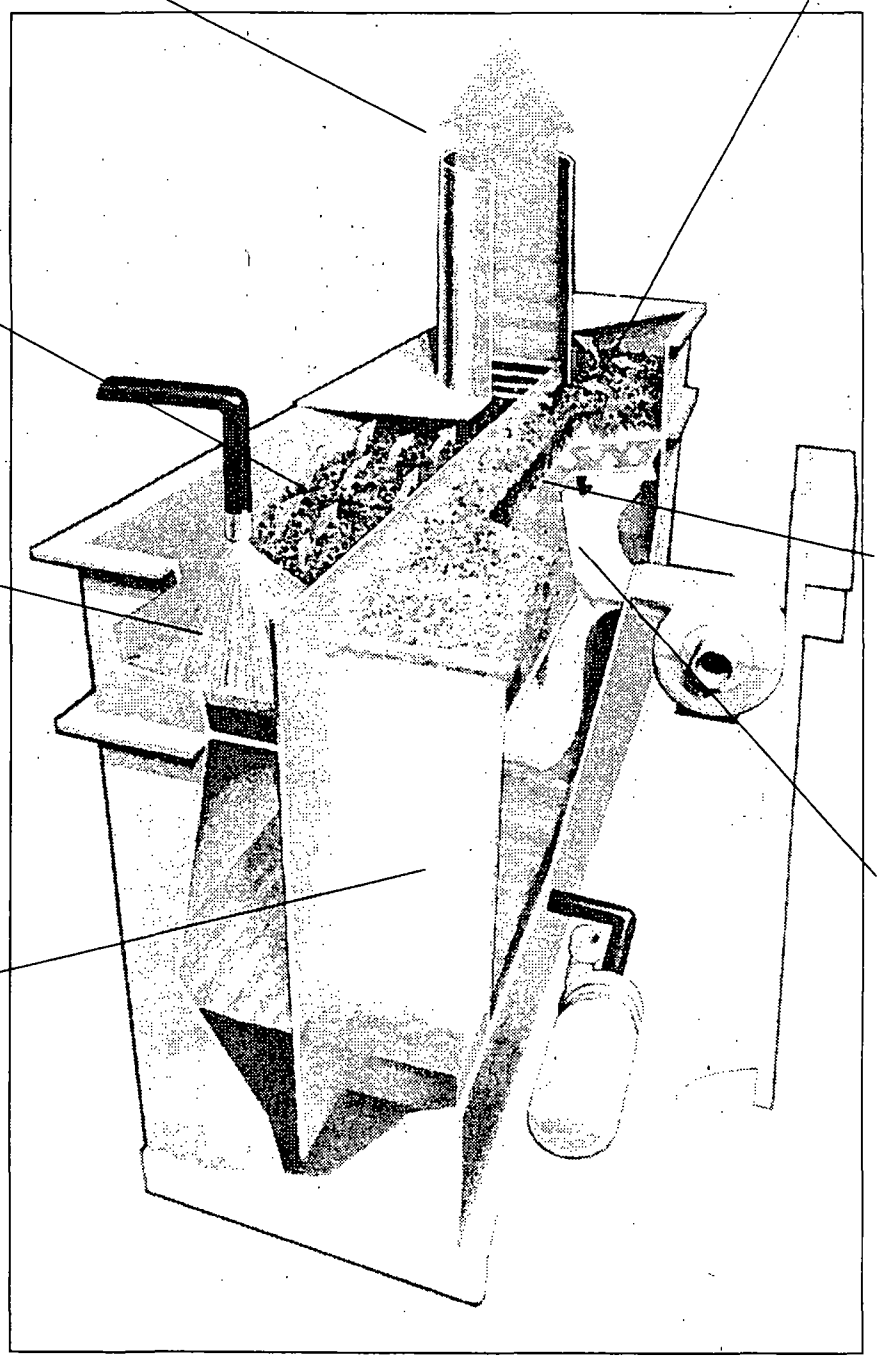

Turbulent frothing maximizes volatilization and scours the aeration tray.

Contaminated water inlet.

Treated water falls into holding tank.

3/16" (4.8mm) holes resist fouling.

Fan blows fresh air up through hundreds of holes into the water.

THE SHALLOWTRAY PROCESS

The Treatment Process

The purpose of air stripping is to treat contaminated groundwater for the removal of certain dissolved volatile organic compounds (VOC). The ShallowTray low profile air stripper is a compact, low-maintenance solution to groundwater treatment.

The active components of a ShallowTray low profile air stripper are patent-protected tray type aeration trays. (The ShallowTray process is protected under U.S. Patent #5,045,215 and 5,240,595; other international patents pending.) Fresh air is blown up through hundreds of $^{3}/_{16}$" (4.8mm) diameter holes in the aeration tray. The air forms a froth of bubbles approximately six inches deep on the aeration tray, generating a large mass transfer surface area where the contaminant's are volatilized. The necessary contact or residence time to reach required volatilization is achieved through model size, addition of trays, and flow rate selection.

Typically constructed of type 304L corrosion resistant stainless steel, or polyethylene, the tray unit utilizes counter current air and water flow through an array of baffled aeration trays. Sizing and design of a ShallowTray low profile air stripper are determined by a variety of factors that include water flow rate, contaminant concentration, temperature, required removal efficiency, and the physical chemical properties of the contaminant's that govern their solubility in water.

The ShallowTray Basic System

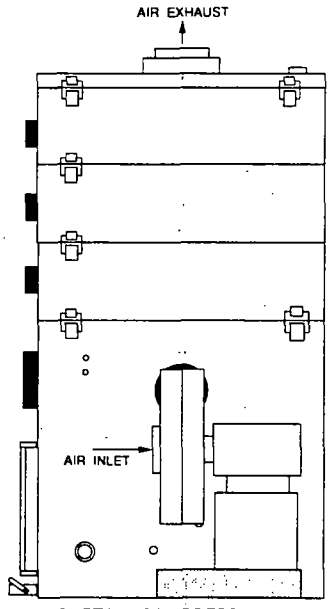

1. 2331 STAINLESS PRESSURE SYSTEM (FORCED DRAFT)

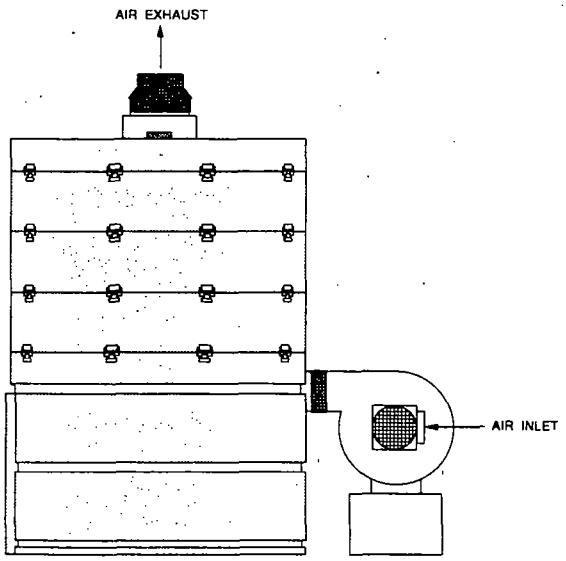

2. 2331 LLDPE PRESSURE SYSTEM (FORCED DRAFT)

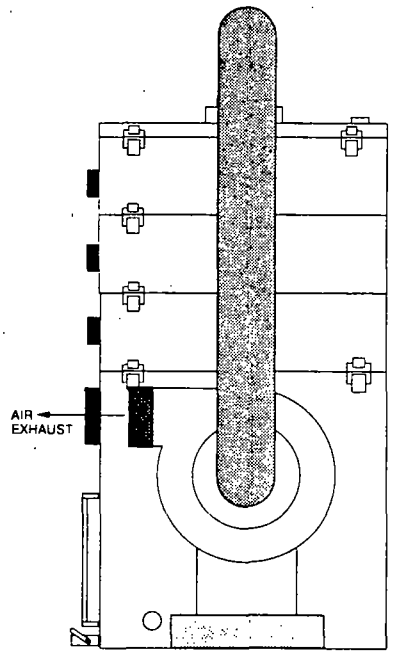

3. 2331 STAINLESS VACUUM SYSTEM (INDUCED DRAFT)

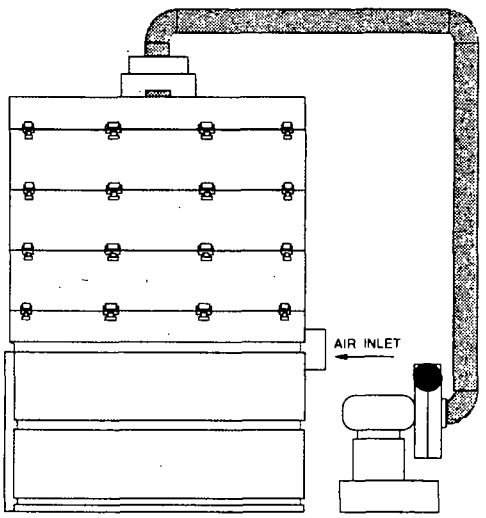

4. 2331 LLDPE VACUUM SYSTEM (INDUCED DRAFT)

BASIC SYSTEM

ShallowTray systems are fabricated from rugged 304L stainless steel, 316L stainless steel, or molded polyethylene, and are typically supplied with all the components listed in this section. Read through each component description for a better understanding of its function.

Pressure Versus Vacuum Set-up

There are two versions of the basic system referred to in this manual. They are defined as follows:

1. Pressure System – The blower is installed so that the stripper tank and aeration trays are pressurized. This arrangement can be used when the maximum total system pressure (air stripper plus other downstream air equipment) does not exceed 22 inches (55.8cm) Water Column (W.C.) pressure or vacuum for plastic stripper, and 32 inches (81.6cm) W.C. for stainless steel stripper.

2. Vacuum System – The blower is installed so that the stripper cover and aeration trays are under a vacuum. Removal efficiency is the same as for a pressure system. This is the proper arrangement when total system pressure would exceed the values listed above. In this setup, the blower induces the required vacuum on the stripper, and also provides the required additional pressure for downstream air equipment.

High Water Flow Versus Low Water Flow Systems

There are two water flow range options for the basic system. They are referred to in this manual as **Low Flow** and **High Flow** systems. The high flow system requires a blower that produces an additional 4 inches (10.2cm) W.C. pressure/vacuum compared to the low flow system blower. The low and high water flow ranges for each ShallowTray series are listed in the table below:

ShallowTray Series	Low Water Flow Range	High Water Flow Range
1300P	0.5 - 15 gpm	N/A
1300	0.5 - 15 gpm	16 - 30 gpm
2300P	1 - 30 gpm	31 - 50 gpm
2300	1 - 30 gpm	31 - 45 gpm
2600	2 - 60 gpm	61 - 115 gpm
3600	3 - 90 gpm	91 - 160 gpm
31200	4 - 150 gpm	151 - 425 gpm
41200	6 - 200 gpm	201 - 550 gpm

Basic System Components

Component manufacturer information sheets ("cutsheets") are included in the Components Information Section (Section 7) at the back of this manual.

Blower

The blowers on the ShallowTray low profile air stripper units are typically type B spark resistant with a cast aluminum wheel, direct drive @ 3450 rpm with motor options of Totally Enclosed Fan Cooled (TEFC) or Explosion Proof (EXP). Each blower is selected by our engineering staff to exceed the minimum cubic feet per minute (CFM) air flow requirements at the nominal working pressure (inches of W.C.) of each system. It is critical that the blower damper be opened wide enough to provide the unit with the designated minimum fresh air flow.

It is also critical that water does not enter the blower housing while the blower is in operation; this will damage your blower and void the warranty. The high water level alarm switch prevents this from happening. Make sure it is installed properly.

The motor horse power is selected to provide a reasonable operating range. However, there is potential for the blower motor to overload if it is not working against a pressure drop. Therefore, the blower must be protected with a thermal overload switch. Also, the blower damper should be set so that the blower produces at least the minimum air flow requirement (see table below), and does not exceed the nameplate amperage limit of the motor.

Damper

There is a damper plate on the intake side of the blower, and is used to make air flow rate (CFM) adjustments to your system. Open the damper to increase air flow rate, and close the damper to decrease air flow rate. Note that air pressure may vary as the air flow rate is changed.

To get the most accurate air flow measurement, we recommend installing an air flow meter in the air piping.

If this is not possible, then an estimated air flow can be obtained by measuring the stripper pressure or vacuum. For initial start-up, simply adjust the damper until the air pressure is at least the minimum required for your system. (Refer to the pressure gauge description for minimum pressure readings).

The table below gives the minimum, recommended, and maximum required air flow rates for each ShallowTray series.

ShallowTray Model	Requirements Air Flow Minimum	Recommended	Maximum
1300 & 1300P	150 cfm (254.9m³/hr)	195	225
2300 & 2300P	300 cfm (509.8m³/hr)	390	450
2600	600 cfm (1019.6m³/hr)	780	900
3600	900 cfm (1529.4m³/hr)	1170	1800
31200	1800 cfm (3058.8m³/hr)	2340	3600
41200	2400 cfm (4078.4m³/hr)	3120	4800

Beware when making damper adjustments after initial start-up. Fouling may occur in the system which may reduce the air flow rate, and may increase the air pressure reading

Demister

A wire mesh demisting pad is installed beneath the air exhaust port, located on the top cover of the unit. The purpose of the demisting pad is to remove water droplets that would have blown through the vent line. It is possible, though unlikely, that the demisting pad may become plugged or fouled. If this occurs the demisting pad is easily removed for cleaning. Disconnect the vent line, take off the top cover, and remove the retaining plates on the bottom side of the cover. The demisting pad can be cleaned with a pressure washer, or replaced with a new one.

Gasket

A black nitrile or neoprene (2300P) sponge gasket is used to form an airtight/watertight seal around the sump tank and aeration trays. If there are any problems with the gaskets, please contact North East Environmental Products. A replacement gasket can be glued to the sealing flange using an industrial neoprene contact adhesive. We recommend using Rubatex adhesive # R-27780. Please contact North East Environmental Products prior to making any gasket repairs or adjustments.

Sight Tube

The sight tube provides a means of easily viewing the water level in the sump tank. Make sure the valve to the sight tube is open during stripper operation.

Spray Nozzle

A spray nozzle is installed in all units except those with a gravity feed option. The nozzle directs the contaminated water to the first inlet chamber and begins the volatilization process. The nozzle is rated for 15 psi at the system's maximum water flow rate.

It is recommended that a strainer be installed somewhere in the inlet process water line, especially during initial start-up, to prevent sediment from plugging the nozzle.

If the nozzle becomes plugged, it is easily removed by first removing the top cover and then unscrewing the nozzle from the inlet piping. Clean it with a wire brush or a pipe cleaner. If the nozzle causes too much back pressure or becomes plugged too often, it can be removed without any serious effects to the system's performance. Units that have a gravity feed system should not use a spray nozzle – it causes too much back pressure. In these cases, the inlet piping should extend below the water level of the inlet chamber to provide a water seal for the inlet pipe.

Note: System performance is tested at NEEP lab without a nozzle, and warranty is valid whether a nozzle is installed or not.

ShallowTray System Options

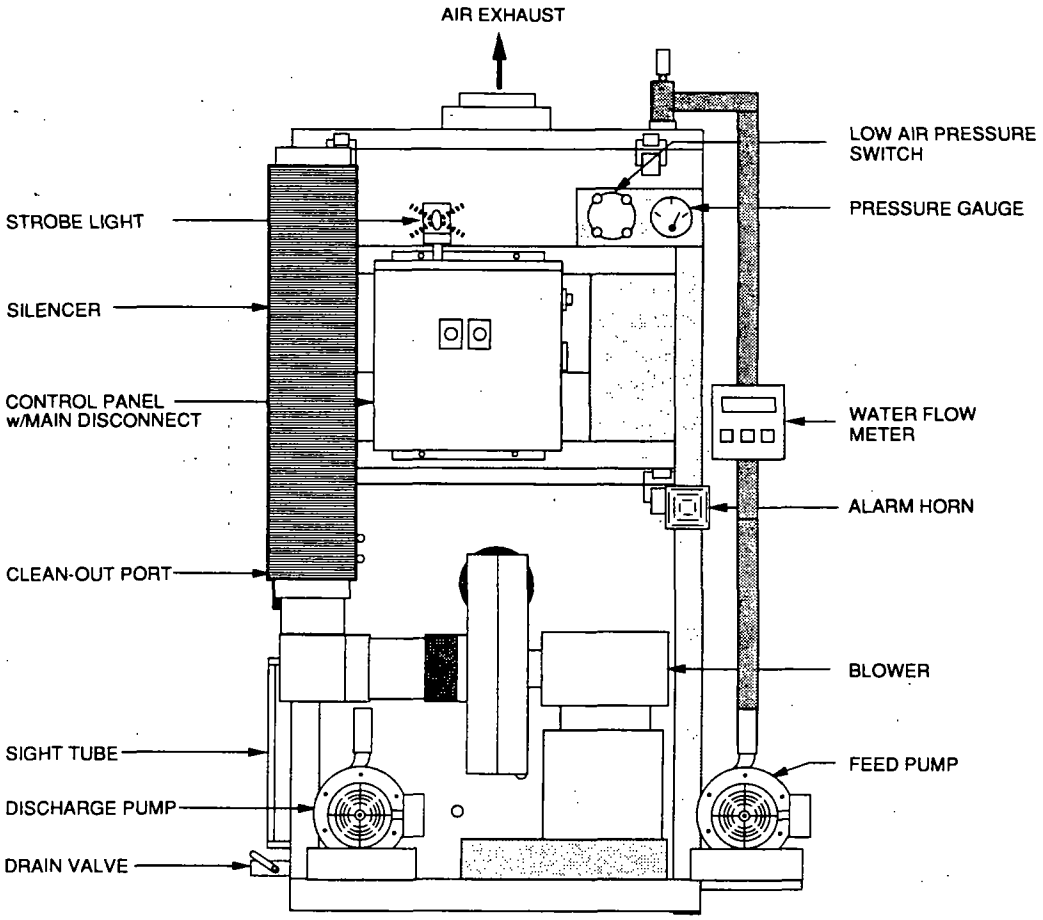

2331 STAINLESS PRESSURE SYSTEM WITH OPTIONS

*NOT ALL OPTION SHOWN

SHALLOWTRAY OPTIONS

ShallowTray System Options

ShallowTray low profile air strippers are custom built to meet site and project specifications. Please refer to the components list insert (Section 1) to see which options were selected for your system. Component manufactured information cutsheets are included in Section 7 of this manual.

Air Blower Silencer

The air blower silencer reduces the dynamic noise level of the blower. The size of the silencer and the type of connection used to mount are dictated by the size of the blower, and whether the silencer is mounted horizontally or vertically. Silencers should be supported to avoid over-stressing the connections, and should be secured if exposed to high wind loads.

Air Flow Meter

The air flow meter measures the amount of air flowing through the system. It consists of a pitot tube mounted in the air line, and a differential pressure gauge. The measured velocity pressure is then converted to an air flow rate. The pitot tube must be located at least 8½ pipe diameters of straight pipe from the cover exhaust nozzle or elbow, and at least 1½ diameters of straight pipe from the end of the pipe or any elbow. The best pitot tube location is before the stripper because the air is less humid and the hose is less likely to fill with condensate.

The air flow meter typically gives readings in inches of water column (W.C.), which is then converted to feet per minute (FPM) using the provided chart. You then multiply the feet per minute by the interior cross sectional area (square feet) of the vent line. This gives cubic feet per minute (CFM). As stated in the damper section, the air flow meter in conjunction with the pressure gauge provides the most accurate damper adjustments, especially after initial start-up.

The table below lists the minimum, recommended, and maximum flows for each stripper model, and the minimum exhaust pipe diameters. Note that the airflow must be at least the minimum for proper stripping efficiency.

Stripper Model	Minimum	Required Air Flow Recommended	Max.	Recommended Exhaust Pipe Diameter
1300	150 cfm (254.9m³/hr)	195 cfm (331.3m³/hr)	300 cfm (509.8m³/hr)	6 in.(15.2cm)
2300	300 cfm (509.8m³/hr)	390 cfm (662.5m³/hr)	600 cfm (1019.6m³/hr)	6 in.(15.2cm)
2600	600 cfm (1019.6m³/hr)	780 cfm (1325m³/hr)	1200 cfm (2039.2m³/hr)	8 in.(20.4cm)
3600	900 cfm (1529.4m³/hr)	1170 cfm (1988.8m³/hr)	1800 cfm (3058.8m³/hr)	10 in.(25.4cm)
31200	1800 cfm (3058.8m³/hr)	2340 cfm (3974.9m³/hr)	3600 cfm (6117.6m³/hr)	6 in.(15.2cm)
41200	2400 cfm (4078.4m³/hr)	3210 cfm (5452.8m³/hr)	4800 cfm (8156.8m³/hr)	8 in.(20.4cm)

Note: Low airflow is the most common reason for poor removal efficiencies. Thus, an airflow meter is highly recommended to ensure adequate air flow.

Air Pressure Gauge

The air pressure gauge reads the pressure differential in inches of water column (W.C.) between the point of highest pressure in the air stripper and the atmosphere. The gauge is connected to the system via an air hose that attaches to a pressure port on the system. Instructions to properly connect the gauge for the two types of systems are as follows:

Pressure System – Using tubing, connect the "High" pressure port on the gauge to the 1/8" (3.2mm) shutoff valve/hose barb located on the air stripper sump tank. The matching "Low" pressure port is to be open to the atmosphere. Highest pressure is in the sump tank.

Vacuum System – Using tubing, connect the "Low" pressure port on the gauge to the hose barb located on the exhaust vent line of the air stripper. The matching "High" pressure port is to be open to the atmosphere. Highest vacuum is in the cover air exhaust pipe.

Note: There are two sets of pressure ports on the gauge. One set should be used to measure the differential pressure, and the other set must be plugged.

At initial start-up, the pressure gauge can be used to make proper blower damper adjustments. Adjustments should be made according to the following nominal air pressure/vacuum table:

	Nominal Air Pressure/Vacuum	
Number of trays	**Low Water Flow System**	**High Water Flow System**
1 tray system	4 - 6 inches W.C. (10.2 - 15.2cm)	7 - 10 inches W.C. (17.8 - 25.4cm)
2 tray system	7 - 10 inches W.C. (17.8 - 25.4cm)	11 - 14 inches W.C. (27.9 - 35.6cm)
3 tray system	11 - 14 inches W.C. (27.9 - 35.6cm)	16 - 18 inches W.C. (40.8 - 45.8cm)
4 tray system	16 - 18 inches W.C. (40.8 - 45.8cm)	20 - 22 inches W.C. (50.8 - 55.8cm)
5 tray system	20 - 22 inches W.C. (50.8 - 55.8cm)	24 - 26 inches W.C. (60.8 - 66cm)

Note: The nominal pressures or vacuums shown are for the air stripper only, and do not include additional air stream equipment pressure requirements. Fouling may occur in the system, which may increase the nominal air pressure reading, and may decrease the air flow rate.

Control Panel

The control panel serves two basic functions required for the safe operation of the system. The first is to provide the required electrical safety components for each motor (blowers and pumps) per NEC standards. These components consist of fuses, motor starters, and overload relays.

The second function is to provide the required process control and alarm components. The alarm circuit monitors the low air pressure switch and the high water level alarm switch. If either of these alarms occur, then the alarm contacts will shut off the incoming water source (feed or well pumps) if the appropriate connections have been made. Other alarm options are also available.

SHALLOWTRAY OPTIONS

Control Panel Intrinsically Safe Components

ShallowTray low profile air stripper systems that operate in or near potentially explosive concentrations of vapors may require intrinsically safe (IS) signals to all electrical components housed in non-explosion proof enclosures. The IS signal is not capable of creating a spark or a temperature rise great enough to ignite any concentration of any NEC classified explosive vapor. Typical components that need IS signals are the float switches and well probes. Determination of when IS signals are required is generally the responsibility of the groundwater remediation engineer who is placing the order for a system.

Digital Water Flow Indicator

The digital water flow indicator, typically installed in the water feed piping to the stripper, reads the rate of flow (gpm) and the totalized flow (gallons). The flow meter is selected to exceed the maximum flow of your system while providing a wide working range. The digital face plate is battery operated and intrinsically safe (Halliburton brand). The only moving meter component is the turbine rotor, which spins around a shaft axially to the flow of water.

It is possible to plug the turbine rotor with particles and sediment. An ⅛" (3.2mm) screen filter should be installed somewhere in the incoming process water line prior to the meter. If the meter becomes plugged it can be disassembled and cleaned. Please disassemble per the manufacturer's instructions, if necessary.

Feed and Discharge Pumps

The pumps on each system have been selected by our engineering staff to meet the appropriate flow and pressure requirements. The pumps are typically cast iron and bronze, with either EXP or TEFC motors. The pumps are not self-priming. Prior to initial start-up, the pumps must be primed by filling the pump impeller housing with clean water. Throttle valves are installed on the discharge lines. If the pump is running wide open and it is not pumping against the required head, the pump may cavitate. This is the nature of centrifugal pumps; they must be throttled back if they are not pumping against the required head. Also, the valve should be throttled back until the motor draws less than the nameplate current rating.

If the pump is wired by someone other than North East Environmental Products, please **double check the rotation**. A pump rotating in the wrong direction could cause the pump impeller to spin off, causing serious damage to the pump.

Systems using pumps should have the flow rates tuned so that the discharge flow rate is faster than the inlet flow rate. This will prevent possible blower flooding.

High Water Level Float Alarm Switch

The high water level float alarm switch is one of the alarm interlocks that must be properly connected, by a licensed electrician, prior to the system's initial start-up. Please see *Special Cautions* at the beginning of Operating Instructions section for more information. The purpose of the high water level float alarm switch is to prevent water from flooding the system. It does this by shutting off the incoming contaminated water once clean water has reached a designated level in the sump tank. The high water level float switch will send an alarm signal when it rises approximately 3 1/2 inches (8.8cm) above the coupling it is installed in.

Line Sampling Ports

The line sampling ports provide a quick and easy way to take water samples of both incoming contaminated water and outgoing clean water. The sampling ports are the typically 1/2" (1.2cm) ball valves located on both the inlet and outlet piping.

When taking a water sample, open the valve and let the water flow for at least 1 minute prior to bottling the sample. This purges the sample port of any stagnant water.

When purging the sample ports be sure to capture the water and properly dispose of it. When starting the unit for the first time double check that the valves on the sample ports are closed.

Low Air Pressure/Vacuum Alarm Switch

The low air pressure/vacuum alarm switch monitors the blower for continuous water treatment. This switch is one of the alarm interlocks that must be properly connected by a licensed electrician prior to the system's initial start-up. Please see *Special Cautions* at the beginning of Operating Instructions section for more information.

Should the blower fail, the low air pressure switch should be wired to shut off all incoming water. Using tubing, connect the switch to the hose barb on the tank (pressure system) or in the cover exhaust pipe (vacuum system).

Pressure system – The air hose is connected from the sump tank 1/8" (3.2mm) hose barb (without valve) to the "high" pressure port on the switch using the provided hose barb. The "low" pressure port must be open to the atmosphere. The switch measures the differential pressure between the sump tank and the atmosphere.

Vacuum system – The air hose is connected from the exhaust piping 1/8" (3.2mm) hose barb to the "low" pressure port on the switch using the provided hose barb. The "high" pressure port must be open to the atmosphere.The switch measures the differential pressure between the top tray and the atmosphere.

Periodically inspect the air hose for water build-up which will affect the switch's operation. The tubing must remain open at all times.

Test the switch at initial start-up by removing the air hose from the hose barb on the sump tank or exhaust pipe once the system is in full operation. This should set the system into an alarm condition and shut off the incoming contaminated water.

High Air Pressure/Vacuum Alarm Switch

The high air pressure/vacuum alarm switch prevents the system from exceeding its highest rated pressure/vacuum value. If the blower has the ability to produce pressure/vacuum higher than 32 inches (81.6cm) W.C. for stainless units or 22 inches (55.8cm) W.C. for plastic units then it should have a high pressure/vacuum alarm switch. Be sure to check that the setpoint for alarm shutdown is at the proper setting for the system.

Main Disconnect Switch

The main disconnect switch removes power from the ShallowTray low profile air stripper. A disconnect is required by the National Electric Code (NEC) and must be installed. North East Environmental Product's panels typically contain a disconnect integral with the control panel to remove power but may also use disconnects external to the control panel depending on the situation. Make sure a qualified licensed electrician installs the power line, into the disconnect switch. Be sure to ground the switch back to the main service.

Water Temperature Gauge

Water temperature gauges can be installed on both the inlet and outlet piping. Water is an important variable for predicting the system's removal efficiency.

Water Pressure Gauge

Water pressure gauges can be installed on both the inlet and outlet water piping. Excessively high readings could signal that something in the piping system is plugged. Large pressure fluctuations could be a sign that the water flow rate is varying.

Section 3: Operating Instructions

Special Cautions!

The following operations must be carried out prior to initial system start-up.

Step 1

Connect the Interlock Switches.

1. To avoid damaging the blower and flooding the equipment with contaminated feed water, install the high water level and low air pressure/vacuum interlock switches.

It is important that a qualified, licensed electrician perform these installations.

High water level interlock

If the water level in the sump tank rises beyond the maximum level, it could flood the blower. This will destroy the blower and void the warranty. The high water level interlock switch will shut off the feed water pump in an emergency situation.

Low Air Pressure/ Vacuum Interlock

If the blower fails, untreated water would flow directly into the discharge line. The low air pressure/vacuum interlock switch will shut off the feed water pump and prevent this from occurring.

High Air Pressure/ Vacuum Interlock

If a system has a blower capable of producing more than 32 inches (81.6cm) W.C. for stainless units or 22 inches (55.8cm) W.C. polyethylene units then it requires a high pressure/vacuum switch. If a unit fouls or pressure increases due to off-gas treatment, it may exceed the maximum pressure rating of the system and cause damage to the gaskets, sump, or trays.

Note: These recommended interlock options might not have been provided by North East Environmental Products.

Step 2

Fill the Sump Tank and each tray's Inlet Chamber.

On initial start-up, the sump tank must be filled with **clean water** to a height of about 5 inches (12.7cm). Make sure the valve to the sight tube is open. The sump tank can be filled via the clean-out ports on the end of the stainless units, or through the inlet water port located on the cover. The inlet chamber on each tray (referred to as seal pots) can be filled manually by pouring **clean water** through the 1 inch (2.54cm) inlet chamber filling ports or the 4 inches (10.2cm) clean out ports located on the ends of the stainless units, or by disassembling the plastic units and filling the seal pots as you reassemble. The seal pots on both the plastic and stainless systems can also be filled at initial start-up by connecting a **clean water** line to the inlet water port and running the system for ten minutes with the damper 1/4 open. For complete instructions on this method, please follow initial Start-up procedures later in this section.

Do Not Run Free-Product Through the ShallowTray Air Stripper.

Free product will contaminate the unit by coating the sidewalls with a film of free-product. ShallowTray units are designed to remove dissolved VOCs only.

Always provide fresh, clean air for the system air intake. Air that is contaminated with VOC's will significantly reduce the Shallow Tray's performance.

Equipment Set-up

Drawings

Drawings referred to in the following sections are located in Section 6.

Please follow codes.

The plumbing and electrical installations must be performed by qualified personnel, and must be done in accordance with local, state and national codes.

Protect critical items from the environment.

In areas that could be below freezing, the stripper should be installed in a heated building. Plastic units, control panels, and motors should be protected from direct sun. Explosion proof motors should be protected from rain due to the absence of motor gaskets.

Install adequate supports.

Since **none** of the external piping associated with the ShallowTray unit is designed to support process water lines or air piping, adequate supports must be installed.

Assemble Unit.

All ShallowTray units are assembled and hydraulically tested at the factory. However, to safeguard the units from shipping damage, some components are removed prior to shipping and will require re-assembling. Follow all relevent steps in this section to properly set-up your ShallowTray unit.

Check for loose fittings.

Shipping your system to the site may have caused piping joints or assembly hardware to loosen. Please re-tighten as necessary.

Step 1

Bolt your unit together.

For shipping purposes, the ShallowTray unit may come in two sections; the blower frame assembly and the sump and tray assembly. Bolt the base frames together using the bolts and spacers provided. (This step is done at the factory for the 1300 and 2300 series.)

Step 2

Connect Blower.

For positive pressure systems simply install the rubber coupling provided from the blower outlet to the air inlet nozzle on the sump tank. (See Section 6 coupling layout drawing for air inlet nozzle location.) For vacuum systems, install a vent line from the stripper air exhaust located on the top cover to the blower intake. North East Environmental Products may not provide this piping. Make sure the

pipe diameter is large enough to maintain the required air flow without adding a pressure drop, and be sure the pipe has a suitable vacuum rating to prevent collapse.

Caution: Blower must draw clean air. Do not vent storage tanks that contain substances that will contaminate the air, in the same room the blower draws air from. Do not duct intake air from an area that has contaminated air. Contaminated air will contaminate the water.

Step 3

Assemble trays and level the ShallowTray unit.

Some of the larger units may have the top tray and cover shipped separately. Install trays shipped separately by lining up the arrows and numbers on the trays and cover. To prevent damaging the gasket, do not drag the trays or cover across the gasket during assembly. Fasten all latches properly. The tray being installed must have the downcomer line up with the sealpot on the tray below it. Check all the trays to make sure they are installed correctly, and not backwards. If the system is not set up properly the water could bypass a tray allowing water to miss a large portion of the treatment path. Refer to the "base subassembly" exploded view drawing in Section 6.

Level the ShallowTray unit. This is a critical step in the proper assembly of the equipment. If not level, the water depth on the trays will be uneven, causing the water to seep through the aeration holes untreated.

Step 4

For a gravity discharge unit

Install the outlet pipe.

For a gravity discharge unit (no discharge pump): Refer to the Section 6 outlet piping drawings to assemble the plumbing components, which are typically shipped in a separate carton. Positive pressure systems require a riser pipe to compensate for the pressure generated by the blower. It is important that the riser pipe height is adjusted to create a 5 inch (12.7cm) water depth in the sump tank during normal operating conditions. The provided vacuum relief valve must be installed to prevent the sump from siphoning below the 5 inch depth.

It is essential that the riser pipe be mounted in the vertical direction, and that it be properly supported.

Note: Some systems have an internal trap. Please refer to the plumbing drawing.

The purpose of having the 5 inch (12.7cm) water depth in the sump tank is twofold. First, it is to keep the downcomer (from the bottom tray) and the water discharge port (which elbows down internally) submerged. Both are set to a height of 2 inches (5.1cm) from the bottom of the sump. Keeping them submerged forms a water seal which prevents air from escaping up the downcomer pipe or discharge trap.

Second, the 5 inch (12.7cm) depth is low enough to allow our high water level switch to reset. The switch, located in its typical position, has an approximate reset deadband of six inches, meaning the water level must drop down 6 inches (15.2cm) below the alarm trip point before it resets. Consult with North East Environmental Products for additional options or questions about float switch location or normal operating water depth.

Use proper pipe sealant and PVC cement when needed. We recommend running the system and adjusting the riser pipe before permanently gluing it together.

Caution: The vertical height of the trap should create a 5 inch (12.7cm) water depth in the sump tank during normal operating conditions. Depths lower than 5 inches (12.7cm) may allow air to escape through the water discharge line or up through the downcomer. This will result in untreated water falling into the sump tank.

Step 5

For a unit with a discharge pump

Install the outlet pipe.

For a pumped discharge unit: Refer to the Section 6 outlet piping drawing to assemble the water line from the sump tank to the pump suction, using components supplied in a separate carton.

Install outlet piping to the pump's discharge port. A ball valve is provided and should be used to adjust flow and prevent the pump from cavitating. Use proper pipe sealant and PVC cement when needed. To reduce pressure losses, it is recommended that the connected pipe size remain at least as large as the fitting provided.

Prime the pump. Pour clean water in the pump's inlet port until it has filled the entire pump chamber. A check valve is supplied to keep the pump primed. Remove the top air bleed plug on the pump housing to let air bleed out, then replace plug tightly.

Step 6

Install the inlet piping manifold.

Install the inlet piping manifold (typically shipped in a separate carton). Follow the Section 6 inlet piping diagram for proper installation. The spray nozzles are installed on the inside of the cover, or may have been shipped separately. The nozzles are typically selected to produce a 15 psi pressure drop at the highest anticipated water flow rate.

During start-up, a strainer should be installed in the water inlet line to prevent the spray nozzle and process water line components from plugging with sand and sediment. If necessary, the strainer can be permanently installed.

Use proper pipe sealant and PVC cement when needed.

Caution: For all systems other than 31200 and 41200, there are two inlet port locations on the cover; one is plugged, the other is used. The 31200 and 41200 series, have three and four ports respectively, and all are used. *You must use the port located above the sealpot of the top tray.* Otherwise contaminated water will bypass the treatment path of the first tray and fall directly into the downcomer to the next tray. This will result in poor removal efficiency.

Step 7

Install the sump drain valve and the sight tube.

Install the sump drain valve and the sight tube. Refer to the Section 6 coupling layout drawing for port locations. Be sure to open the valve to the sight tube during start-up and operation. The valve should be closed only to replace a damaged sight tube.

Step 8

Connect the water lines.

If the seal pots have not yet been filled with *clean water*, connect a *clean water* line to the inlet port or piping manifold and fill the seal pots according to the steps outlined in the initial start-up section.

If the seal pots are filled with clean water, connect the process water line to the inlet piping manifold.

Connect the discharge water line.

Firmly support the process water lines to prevent stress on the piping and ports. **The system is not designed to support the weight of the process water lines.**

Use proper pipe sealant and PVC cement when needed.

Step 9

Connect the air hoses.

Connect the air hoses from the ShallowTray to the optional low air pressure/ vacuum switch, optional high air pressure/vacuum switch, and the optional pressure/vacuum gauge. Read the component descriptions on each for detailed connection information, and also refer to the Section 6 drawings. For the air pressure gauge, be sure to install the hose to the 1/8" (3.2mm) shutoff valve. Open the valve only when a reading is required. This will reduce the chance of harmful condensation build-up in the gauge. The air pressure switch hose should always be open for continuous sensing. The switch is designed to drain any excess condensation.

Step 10

Connect an air vent line.

Connect an air vent line on the top of the unit.

Caution: Do not use a vent line with a smaller diameter than the air exhaust port. A smaller diameter may cause a pressure drop larger than the blower was designed for, resulting in low air flow and poor removal efficiency.

Connect the air vent line to the exhaust port using the flexible rubber coupling provided. Support the vent line independently of the air stripper so that it can be easily disconnected when the cover is removed for maintenance purposes.

Step 11

Wire the electrical components.

Have a qualified, licensed electrician wire the electrical components in compliance with local, state, and national codes.

Make sure the safety interlocks, described in the Special Cautions section, are connected properly!

(If North East Environmental Products is supplying your control panel, see Section 6 wiring diagrams.)

Step 12

Install optional items.

Air flow meter

Mount the pitot tube on the vent line per Dwyer bulletin # H-11 (located in the separate shipping box) or per the Section 6 air flow meter assembly drawings using the mounting hardware provided. Connect pitot tube to the 0-0.5 or 0-1.0 inches water column air pressure gauge using the air hoses provided. (See pitot tube mounting diagram in Section 6.) There are two air hoses required, one connects to the high pressure ports on the gauge and on the pitot tube, and measures static pressure plus velocity pressure. The other connects to the low pressure ports on the gauge and on the pitot tube, and measures the static pressure only. The optimum pitot tube location is before the stripper, because the air is less humid and the hose will be less prone to filling with condensate.

Air blower silencer

Pressure systems – Install the silencer on the inlet side of the blower.

If the silencer is to be in the vertical position, install the piping and elbow as shown on the Section 6 silencer diagram.

If the silencer is in the horizontal position, attach it directly to the blower inlet using a rubber coupling.

Vacuum systems – Install the silencer on the blower discharge port. The silencers maximum pressure/vacuum rating is 20 inches (50.8cm) W.C. Be sure not to exceed the limit.

Water flow meter

Install the water flow meter into the inlet piping per the Section 6 water inlet piping diagrams.

The flow meter owner's manual was sent with the unit. Be sure to refer to it when installing the meter.

Please install an 1/8" (3.2mm) strainer in the incoming process water line prior to the water flow meter. This will prevent rotor jamming.

Note: There may be other optional equipment that requires installation or assembly. Please refer to the Section 6 specification sheet and drawings for more information.

Initial Start Up

Upon completion of the equipment set-up and mechanical/electrical installation, proceed with the following steps:

Step 1

Check all connections, and close drain and sample valves.

Double check that all electrical, water and vent connections are properly made. Close drain and sample valves.

Note: Be sure that the sight tube valve is open.

Step 2

With other switches 'OFF', turn 'ON' the main power disconnect switch.

Turn all panel control switches to the 'OFF' position, then turn 'ON' the main power disconnect switch.

Note: Turn all panel control switches to the 'OFF' position before applying power. Systems with intermittent operation will show an alarm condition (low air pressure) five seconds after power is applied because the blower is not operating. Once the blower is supplying proper pressure, the alarm low air pressure condition will reset. Some systems may require pushing an 'Alarm Reset' button.

Step 3

Check the blower rotation.

Check the blower rotation by momentarily switching 'ON' (bumping) the blower switch and observing whether the blades turn in the direction of the arrow on the blower casing. You can also observe the motor's cooling fan blades for proper rotation.

Note: If system panel has the intermittent operation feature, the blower motor must be bumped in the 'HAND' position. Refer to the Routine Operation Section for a description of "intermittent operation".

Step 4

Attach clean water line to the inlet.

If you did not fill the seal pots on each tray manually, please fill them now by attaching a (clean) water line to the water inlet piping manifold or port, and then follow Step 5.

If you have filled the seal pots manually, please skip Step 5 and go to Step 6.

Step 5

Fill the seal pots (inlet chamber) with clean water.

***Special Caution*: Make sure to use *clean water* when filling the seal pots. If contaminated water is used it will go through the system untreated.**

To fill the seal pots (inlet chambers), set the blower damper to ¼ open, and start the blower and the clean water flow to the unit. Let the blower and clean water run for about five to ten minutes, then shut them off. Setting the damper at ¼ open reduces the air flow enough to allow the water to flow through the downcomers and into the seal pots.

Note: If your system has the intermittent operation feature, you must start the blower in the 'HAND' position for this procedure.

If you have trouble filling the seal pots by this method you can fill them manually, either by using the one inch sealpot filling ports (if provided), or by spraying a stream of clean water through the clean-out ports (not provided on plastic systems). The stream of water must be directed into the sealpot on the far side of the unit, until the sealpot is full.

For plastic systems and older model stainless systems, you must remove the trays and fill the sealpots manually.

Step 6

Connect contaminated feed water line.

Connect contaminated feed line. Install all piping to allow for future removal or repair. Make sure it is supported independently of the ShallowTray. Start system with the blower damper ½ open.

Note: For systems with intermittent operation, you must turn 'OFF' the power at the main disconnect, turn all control switches to the auto position, and then reapply main power. All motors will start automatically based on control functions.

Note: Each control panel is uniquely designed for each site. Become familiar with the panel logic and proper operation before attempting to start the system. The panel might have been provided by a panel manufacturer other than North East Environmental Products.

Step 7

Check the air pressure readings and set damper.

Run the unit for 5 minutes, and then adjust the blower damper setting to produce the required air pressure/vacuum reading on the pressure gauge. Since the blowers provided by NEEP are selected and tested to exceed the minimum flow requirements of the system, you can use the following table to set the damper during initial start-up.

	Nominal Air Pressure/Vacuum	
Number of trays	**Low Water Flow System**	**High Water Flow System**
1 tray system	4 - 6 inches W.C. (10.2 - 15.2cm)	7 - 10 inches W.C. (17.8 - 25.4cm)
2 tray system	7 - 10 inches W.C. (17.8 - 25.4cm)	11 - 14 inches W.C. (27.9 - 35.6cm)
3 tray system	11 - 14 inches W.C. (27.9 - 35.6cm)	16 - 18 inches W.C. (40.8 - 45.8cm)
4 tray system	16 - 18 inches W.C. (40.8 - 45.8cm)	20 - 22 inches W.C. (50.8 - 55.8cm)
5 tray system	20 - 22 inches W.C. (50.18 - 55.8cm)	24 - 26 inches W.C. (60.8 - 66cm)

Note: Double check pressure reading after system has been running for about ½ hour. Adjust damper again if needed. Also check the airflow meter for proper airflow rate.

Pressure readings may vary somewhat depending on your venting system. See the components list in Section 1 for the minimum air flow requirements for your system.

The system is ready for operation.

The system is now ready for normal operation. It is not necessary to perform initial start-up procedures each time the system is shut down.

However, note that anytime water is completely removed from the seal pots or sump tank, the initial start-up procedure must be done again. For example; after the system has been taken apart for cleaning, or after an extended shutdown where the water may have evaporated from the tank or seal pots.

Routine Operation

Air Flow

The table below lists the minimum, recommended, and maximum airflow for each stripper model and the minimum exhaust pipe diameters.

Note: The airflow must be at least the minimum shown for proper stripping efficiency.

Stripper Model	Minimum	Required Air Flow Recommended	Maximum	Minimum Air Pipe Diameter
1300	150 cfm	195 cfm	300 cfm	6 in. (15.2cm)
2300	300 cfm	390 cfm	600 cfm	6 in. (15.2cm)
2600	600 cfm	780 cfm	1200 cfm	8 in. (20.4cm)
3600	900 cfm	1170 cfm	1800 cfm	10 in. (25.4cm)
31200	1800 cfm	2340 cfm	3600 cfm	16 in. (40.8cm)
41200	2400 cfm	3210 cfm	4800 cfm	18 in. (45.8cm)

Adjust water flow rate by setting the water throttle valves.

Now that the system has been primed per the initial start-up procedures, it is ready for fine tuning. Adjust throttle valves on inlet and outlet piping to obtain the desired water flow rates. Refer to the Section 6 specification sheet for your system's design and maximum water flow rates. To prevent a high water level alarm, it is critical that the discharge pump flow rate exceeds the influent water flow rate.

Pumps provided by NEEP have throttle valves on the discharge side of the pump. Once the desired water flow rate is achieved, check the amp draw of the motor.
It must not exceed the pump nameplate amp draw. If the pump is cavitating, it is not pumping against the required head, and should be throttled back.

Alarm switches

High water level switch – The switch is typically installed in the middle of three half inch switch ports located on the front of the unit (refer to the Section 6 coupling layout drawings). If more sump capacity is required, the high level float switch can be moved to the top port location.

Caution: If the float is moved to the higher port and the discharge line plugs or the discharge pump fails, the water level could rise above the air inlet port, allowing water to drain into the blower housing or onto the floor. The blower may become damaged if it is running while water is in the blower housing. Be sure to check that the 1/8" (3.2mm) hole in the bottom of the blower housing is open to allow for drainage of water that may get into the housing by accident.

Section 4: Cleaning Procedures

Intermittent Operation

If continuous blower operation is a concern, ShallowTray low profile air stripper systems can be designed to run intermittently. When the feed water is flowing into the system, the blower will be in operation and the outlet pump (if provided) will maintain proper sump tank levels. When the feed water is shut down, the blower will run for an additional five minutes to treat the water already in the trays, then it will also shut down. When the feed water is restored, the blower will automatically start up to treat the new batch of water.

If there is an alarm condition that lasts longer than five minutes the blower will shut down and the alarm circuit or light will remain on. Once the blower shuts off, the system will sense a low air pressure condition. To reset the alarm circut or light once the blower has shut off, you must disconnect power at the main disconnect. Some systems may also have a "reset" push button on the control panel door.

System Shut Down

Shut feed water off.

Shut off the water feed to the system.

Wait 5 minutes, then shut off the blower.

Wait 5 minutes to allow the water in the aeration trays to be completely treated, then shut off the blower. Treated water in the trays will drain into the sump tank, so it is important to keep the outlet pump in "auto" to remove this extra water.

Shut main power off.

Shut off the power at the main disconnect switch if the shutdown is more than temporary.

Caution: If proper shut down procedures are not followed contaminated water will drain into the sump tank. This will contaminate the water that has been collected in the tank. Therefore, always allow the blower to run an additional 5 minutes after the feed water is shut-off.

MAINTENANCE

Equipment Maintenance Instructions

Cleaning Instructions

Minerals dissolved in high concentrations tend to precipitate out of groundwater during aeration processes. These minerals form insoluble deposits commonly referred to as 'fouling.' Although the ShallowTray low profile air stripper system is designed to be fouling resistant, proper steps must be taken when treating water with high mineral concentrations. Deposits from iron-rich feed water can be reduced by pre-treating it with **sequestering agents.** For more information, please call Brad Horn or Greg Warnke, Remede Products, Inc., 802-365-7200. The recommended cleaning procedure is pressure washing. Please follow the detailed instructions in this section.

Equipment Required

Pressure Washer

2 gpm minimum flow at 900 psi max. Equipment rental companies can usually supply such a unit on a daily rental basis.

Washer Wand

Washer wand with spray nozzle, (obtainable from North East Environmental Products as an option) and an adapter to connect the wand to the pressure washer hose end. All washer wand connections are ¼" (6.4mm) NPT.

Clean Water Supply

Clean water supply with a capacity of at least 2 gpm at 20 psi. Connect to the pressure washer using an ordinary garden hose.

Cleaning the Unit

Step 1

Turn off equipment.

Turn off the feed water to the stripper.

Step 2

Provide for waste disposal.

Make provisions for disposing of the sludge and waste generated during cleaning. A wet/dry vacuum may be required, or possibly the outlet pump (if provided) can pump out to a storage tank. Be aware that large pieces of debris might possibly clog the outlet pump or check valve.

Step 3

Remove cleanout port covers.

Remove all cleanout port covers.

Step 4

Turn on water and pressure washer.

Turn on the water supply to the pressure washer. Then, turn on the pressure washer itself. Wear protective goggles or face shield while spraying.

Step 5

Insert wand and start pressure washer water flow.

Insert the wand all the way into the 8" (20.4cm) cleanout port on the sump tank. Have the spray nozzle pointed up toward the bottom of the lowest tray. Holding the wand tightly, pull the trigger to start the pressurized water flow. Expect the wand to kick back as flow starts.

Step 6

Move wand side to side.

Move the wand side to side at a rate of about 1 inch (2.54cm) per second. Be sure to cover the entire tray bottom area. Recommended cleaning times for one side of one tray are given below:

Model 1300	2 min
Model 2300	4 min
Model 2600	8 min
Model 3600	12 min
Model 31200	24 min
Model 41200	32 min

Step 7

Inspect cleaned area.

Periodically stop the cleaning operation and inspect the cleaned area by shining a light into the unit. The area is clean when there are no deposits in or around the aeration holes.

Caution: Check the water level in the sump tank periodically, and drain it when necessary.

Step 8

Clean top side of tray.

When the bottom surface appears clean, move the wand to the same top side of the same tray by inserting it in the next highest cleanout port. Continue spraying with the nozzle pointed down onto the top surface of the tray. Remove all visible deposits from the tray baffles and the walls of the unit.

Step 9

Repeat for all trays.

Repeat the procedure for the bottom of the next higher tray, etc., working up to the top tray.

Step 10

Rinse.

After the cleaning operation is finished, rinse the trays, baffles, and walls with the pressure sprayer. Work down from the top tray to the sump tank. Make sure the surfaces are clean and the holes are not blocked by loosened debris.

Step 11

Remove the top cover, flip it over, and wash the bottom side. Inspect spray nozzle and the wire mesh demister pad for fouling.

Clean the spray nozzle.

If the spray nozzle shows evidence of deposits, it should be removed and cleaned with a wire brush. Some systems have more than one spray nozzle.

Check the demister pad.

Clean the demister pad.

Use the pressure sprayer to remove debris, deposits and gummy residues on the demister pad.

Replace the demister pad.

Demister pads that are excessively plugged should be replaced. The old pad is removed by loosening the retainer plates on the corners of the pad. Reinstall the new pad in the same orientation as the old one.

Section 5: Troubleshooting

Caution: A competent electrician should perform any work inside the electrical control panel. Do not perform troubleshooting if you are not familiar with the procedures or the equipment.

Problem — Blower Won't Start Or Run

No power to blower

Check that all switches are in "ON" or "AUTO" position.

Position main disconnect switch to "ON" position. Turn control switches to "ON" or "AUTO."

Blown Fuse

Check to see if fuses are ok. Check fuses in main disconnect switch and in control panel.

If blown, replace with fuse of the same size and rating to avoid the risk of fire or electrical shock.

Overload relay trips

Locate reset button on blower overload relay.

Push reset button in. Reasons for tripping: incorrect line voltage, motor wired incorrectly, inadequate ventilation, worn bearings.

Tubing to air pressure switch plugged with water or debris.

Remove tubing from air pressure switch and blow into it towards tank.

Clean or replace tubing if plugged or kinked.

Blower does not rotate freely.

TURN OFF ALL power to the system. Try to spin wheel by hand. Wheel should rotate freely.

Call North East Environmental Products.

Problem — Outlet Pump Won't Shut Off

Suction or discharge piping for pump is clogged.

Check water flow from discharge pipe. Piping should be clean inside. Look for narrowing caused by scale or iron accumulation.

Remove piping. Inspect, clean, or replace as necessary.

Float switch in tank is stuck in down position.

Remove 8 inch (20.4cm) inspection cap and check that all floats are floating on the water.

Clean all deposits from float. Replace float if necessary.

Normal Operation – Water level in sump is OK.

Pump will stop when water level reaches pre-determined height in tank.

Allow water level to decrease until pump turns off.

Let water level reach predetermined lower level, which will cause outlet pump to turn off. Water level may be just below the bottom of clear sight tube before pump shuts off – this is normal.

Problem — Outlet Pump Won't Run Or Pump Water

No power to pump

Check that all switches are in "ON" or "AUTO" position.

Position main disconnect switch to "ON" position. Turn control switches to "ON" or "AUTO."

Blown fuse.

Check to see if fuses are ok. Check fuses in main disconnect switch and in control panel.

If blown, replace with fuse of the same size and rating to avoid the risk of fire or electrical shock.

Overload relay trips.

Locate reset button on pump overload relay.

Push reset button in. Reasons for tripping: incorrect line voltage, motor wired incorrectly, inadequate ventilation, worn bearings.

Normal operation – Water level in sump is OK.

Pump will start when water level reaches predetermined height in tank.

Allow water level to increase until pump turns on. Be sure pump switch is in "Auto" position.

Let water level reach predetermined upper level, which will cause outlet pump to turn on.

Level switch in tank is wired incorrectly in control panel.

Check wiring circuit against diagram. See that all connections are tight and no short circuits exist because of worn insulation, crossed wires, etc.

Rewire any incorrect circuits. Tighten connections, replace defective wires.

Pump does not rotate freely.

TURN OFF ALL POWER TO THE SYSTEM. Try to turn impeller by hand.

If impeller won't turn, remove housing and locate source of binding. It could be due to impeller, seal, or bearing damage, or excessive fouling.

Impeller or check valve is fouled.

TURN OFF POWER.

Remove pump outer housing and inspect impeller for blocked openings. Be sure to have a new housing gasket kit before removing housing. Remove check valve from line and inspect for stuck or fouled valve. Clean or replace impeller or check valve as necessary.

Problem **Low Air Pressure/Vacuum In Stripper Tank**

Blower damper closed.

Visually check position of damper on inlet of blower.

Open damper to get proper reading on pressure gauge. Firmly tighten damper set screw.

Motor rotation backwards.

Watch rotation of blower wheel at slow speed. It must match direction of the rotation arrow on the blower housing.

Reconnect for proper rotation as per motor diagram.

Gravity discharge trap installed incorrectly.

Trap should be positioned vertically, as an "upside down U."

Install discharge trap per outlet plumbing drawings located in Section 6.

Inlet chamber (sealpot) in each tray is not full of water.

Remove "4 inch" (10.2cm) rubber caps or slide tray aside and look at water level in chambers.

Remove 4 inch (10.2cm) rubber caps on end of trays. Fill up inlet chambers with a hose. Or, follow the sealpot fill procedure as described in the Initial Start Up section.

Rubber clean out caps not in place.

All cleanout ports must have a rubber cap installed.

Tighten clamp on all rubber caps.

Tubing to pressure gauge plugged with water or debris.

Remove tubing from pressure gauge and blow into it towards tank.

Clean or replace tubing if plugged or kinked.

Unit has gravity feed, and inlet pipe on inside of ShallowTray cover is not submerged in inlet chamber water.

Remove cover and measure length of piping hanging from inside of cover. Length is to be about 10½ inches (26.6cm) from cover surface.

Adjust length of inlet pipe on inside of cover until total length is about 10½ inches (26.6cm). DO NOT INSTALL NOZZLE ON A GRAVITY FEED UNIT.

Debris blocking blower intake.

Look at blower intake screen.

Remove debris from screen.

Normal operation for automatic unit.

When inlet pump starts, the blower will start and air pressure will increase to required operational level.

No action necessary.

Problem **High Pressure/Vacuum In Stripper**

Air exhaust piping is restricted.

Check vent piping for bird nests or other obstructions. Check that vent pipe diameter does not decrease.

Intake or exhaust air pipe diameter must be at least as big as the cover vent neck or blower intake neck diameters.

Air holes in bottom of trays are plugged.

Remove inspection and cleanout caps and visually inspect aeration holes.

For iron fouling, clean out the unit with a 1000 psi pressure washer. For scaling, scrape or bang the scale from all surfaces, then use a pressure washer to open the 3/16 inch (4.8mm) diameter holes. Consider using a sequestering agent to reduce scaling.

Demister pad is plugged.

Remove cover from ShallowTray and inspect the bottom of the demister pad in the cover.

Remove demister pad from cover and clean. If too fouled, replace with a new demister.

Problem — Water Won't Flow Into Unit

Inlet/well pump functioning properly.

Allow water level to rise in well pump, which will turn on the inlet pump and start water flow to system.

No action necessary.

Stripper Sump Tank air pressure is low. System is in alarm condition.

Read sump tank air pressure from pressure gauge. System should be in alarm condition if pressure is below about 2 inches (5.1cm) W.C.

Check that blower is operating properly, and has correct rotation. Check that all rubber caps are in place on end of trays.

Spray nozzle or inlet piping is plugged.

Remove cover and inspect nozzle and piping for debris and buildup.

Clean or replace clogged parts.

Problem — Iron Fouling Is A Problem

Iron precipitates out of water when treated with an air stripper, causing iron build up in unit.

Remove cleanout caps and inspect inside of tray for buildup/fouling.

- Clean out unit with 900 psi pressure washer on a routine basis.
- Pretreat incoming water to reduce fouling problems in stripper.
- Meter a sequestering agent into the inlet water.

Problem — Voc Removal Is Less Than Expected

There are many possible reasons for poor stripper efficiency. Please review the following list of questions to determine what the problem might be.

1. Have the trays been taken apart? Are they put back together as from our factory, i.e., nozzle over sealpot, downcomers from each tray underwater in the sealpot of the tray below?
2. What is the sump tank air pressure reading? Is it steady, slowly changing over time, or rapidly fluctuating?
3. What is the air flow rate through the stripper? How is it measured? Where is the sensor mounted?
4. What is the air intake and exhaust piping design (size of ducts, number of elbows, length of pipe run, GAC, heaters, other restrictions)?
5. Are sample ports installed on each tray to verify per-tray removal efficiency?
6. Is sump tank contaminated? Where are effluent samples taken from?
7. Are sample ports purged for 30 seconds-1minute before taking sample?
8. Are samples being taken, stored, and tested per approved methods?
9. Are seal pots on each tray full of water?
10. Does the sump tank have at least 4 inches (10.2cm) of water at all times?
11. Is the water suction elbow in the tank pointing down and always underwater?
12. What is the inlet water temperature?
13. What else is in the water besides the contaminants in question?
14. Are there occasional slugs of free product, or much higher than normal contaminant concentrations that could sneak into the stripper?

15. Is inlet water supplied as a continuous stream (as from an electric pump), or is the flow pulsed (as from a pneumatic pump)?
16. Are there surfactants, detergents, greases, fats, etc. in the water that are causing foaming in the stripper?
17. Is there equipment near the blower intake that could be contaminating the air?
18. Has the air entering the blower been tested for absence of VOCs?
19. How far away from each other are the air intake and air exhaust points? Is the air intake downwind or upwind from the exhaust? Is it possible for contaminated air to be sucked back into the stripper air intake?
20. Is the blower spinning in the correct direction (top of blower wheel spinning towards tank)? Watch wheel when it is almost stopped.
21. Is there air coming out of the discharge piping?
22. Is outlet piping siphoning all water out of the sump tank, until it sucks air from tank?
23. What is the outlet plumbing design (gravity discharge, pumped discharge, uphill, downhill, other equipment in-line, size of piping, etc.)?
24. What do the bubbles look like in each tray? Install temporary windows to see.
25. Are the undersides of the trays free of drips and drizzles?
26. Are tray holes at all closed or plugged? Is there any scaling or fouling on the trays?
27. Is the system level?
28. When shutting system down, is inlet water shut off, blower allowed to operate for an additional 5 minutes, then blower shut off?

Section 6: Drawings

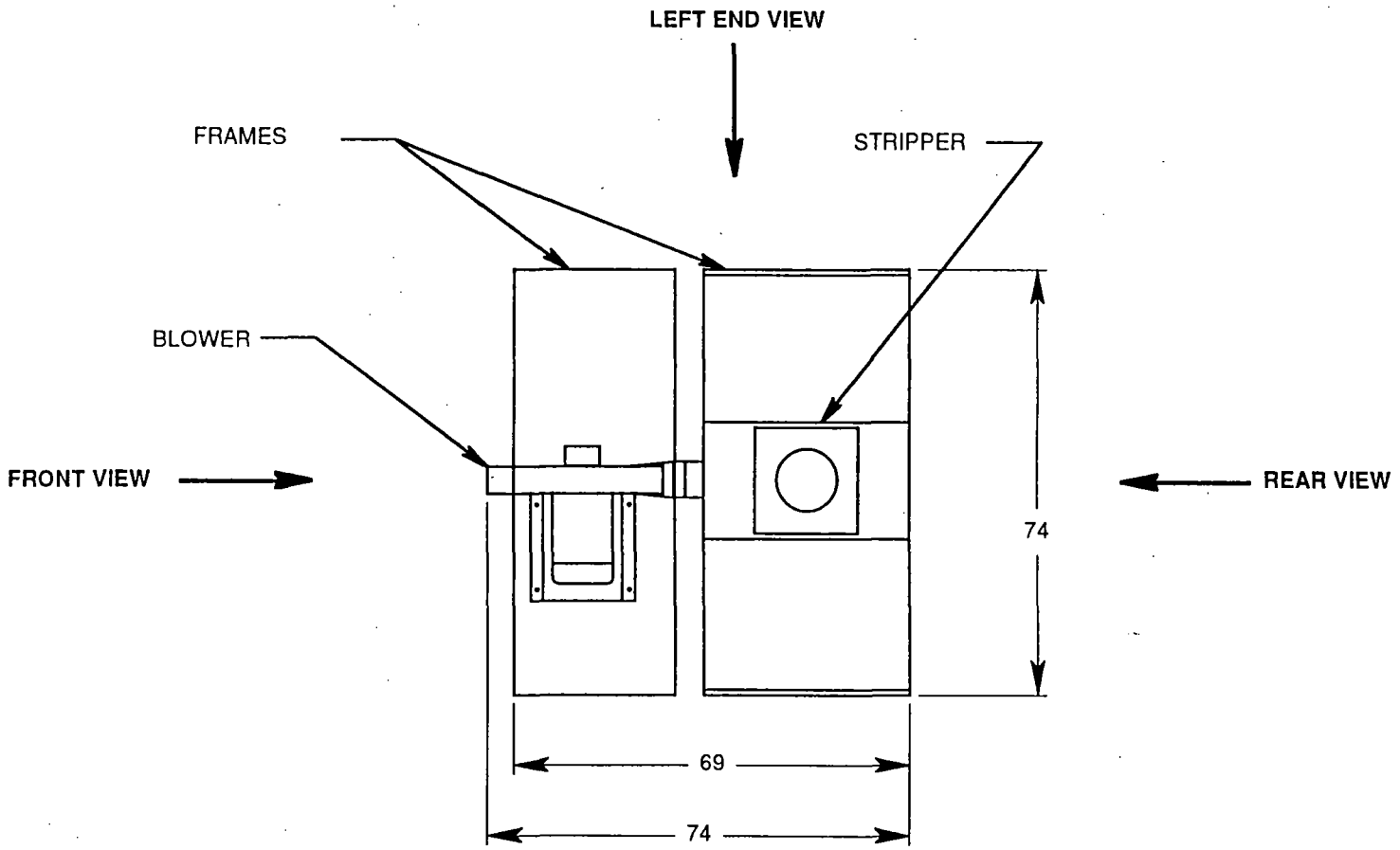

OVERALL HEIGHT 96.5"
INCLUDING FRAME

FRAME IS 7" HIGH

DIMENSIONS ARE APPROXIMATE

NORTH EAST ENVIRONMENTAL PRODUCTS, INC.
17 TECHNOLOGY DRIVE
WEST LEBANON, NEW HAMPSHIRE 03784

TITLE

SYSTEM LAYOUT - PLAN VIEW

SIZE	DWG NO.	SHEET	REV
A	4939 LAYOUT	1 OF 1	Ø

SCALE		DRAWN	DATE
NONE	DO NOT SCALE DRAWING	RC	2/17/97

3651 BASE SUBASSEMBLY

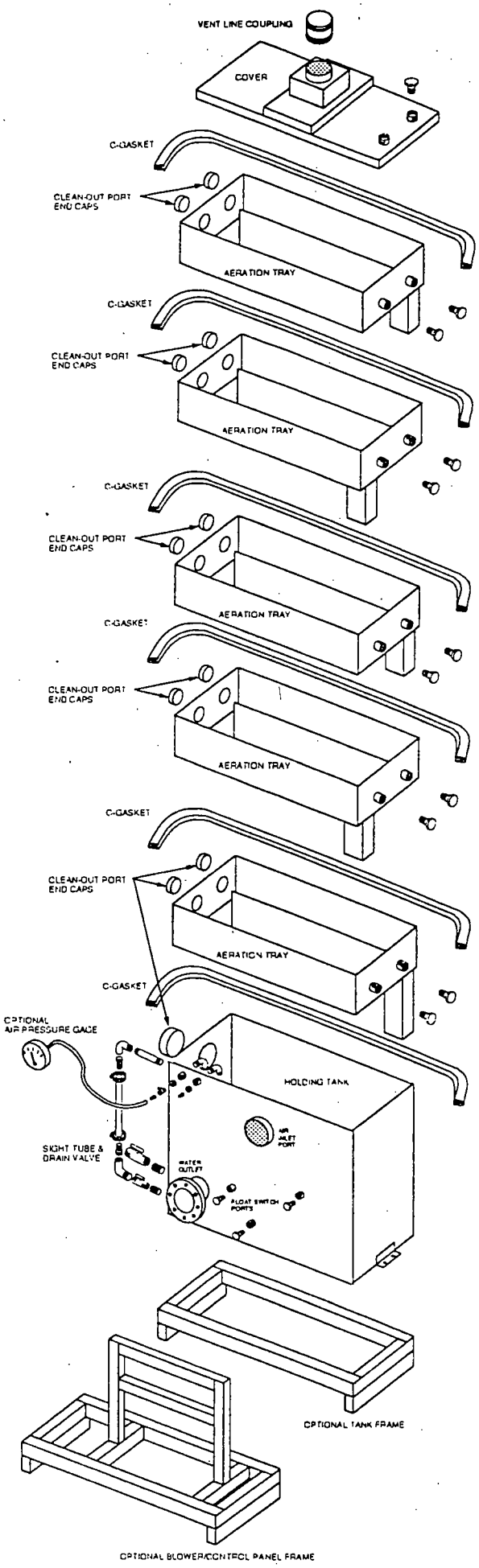

1	200-160-00120	Cover Assembly,3600-9"
5	200-160-00110	Tray, Aeration Assy.3600-9"
1	200-160-00100	Tank Assembly, 3600-9"
1	200-140-00010	Sight tube Assy, small
1	200-140-00142	Drain Valve Sub. 1"
1	500-160-01500	Downcomer, 32", 3600-9"
4	500-160-01490	Downcomer,11"L,3600,304SST
5	500-160-01510	Sealpot,3600,304SST
5	500-160-01470	Weir,2.0"H,3600,304SST
5	500-160-01480	Weir,4.0"H,3600,304SST
10	500-150-00295	Gasket,Sealpot/DC,3600-9"
1	500-160-00070	Demister SQ,18x18x4,(3600)
1	500-150-00170	Coupling Rubber 10x10
10	500-150-00220	Cap,Rubber,4(4.0)
1	500-150-00200	Cap Rubber 8"
10	500-140-02020	Plug,1.0",Thread,PVC 40
1	500-140-02060	Plug,3.0",Thread,PVC 40
2	500-140-02880	Hose Barb .125Mx.188M
2	500-140-02520	Elbow Street 90, .5Fx.5M
2	500-140-02205	Bushing .5Mx.125F,TxT,Brass
1	500-140-02735	Valve,Shut-Off,1/8Mx1/8F,Brass
108'	500-150-00230	Gasket,J,Flange,SST Tray,Vacuu

SELECT OPTIONAL FRAME COMPONENTS AS REQUIRED:

☐ 1 - (500-170-00071) TANK FRAME, 3600

☐ 1 - (500-170-00061), BLOWER FRAME, 3600

☐ 1 - (500-170-00045), PANEL MOUNT, 3600

NORTH EAST ENVIRONMENTAL PRODUCTS, INC
17 TECHNOLOGY DRIVE
WEST LEBANON, NH 03784
(603) 298-7061

TOLERANCES UNLESS OTHERWISE SPECIFIED ± 1 in.	DRAWING NAME: 3651 BASE SUBASSEMBLY
	DRAWING #: 200-160-00526
DRAWN: KM DATE: 8/26/94	CUSTOMER:
REV. B DATE: 10/28/96	SCALE: / SIZE: A / SHEET: 1 OF 1

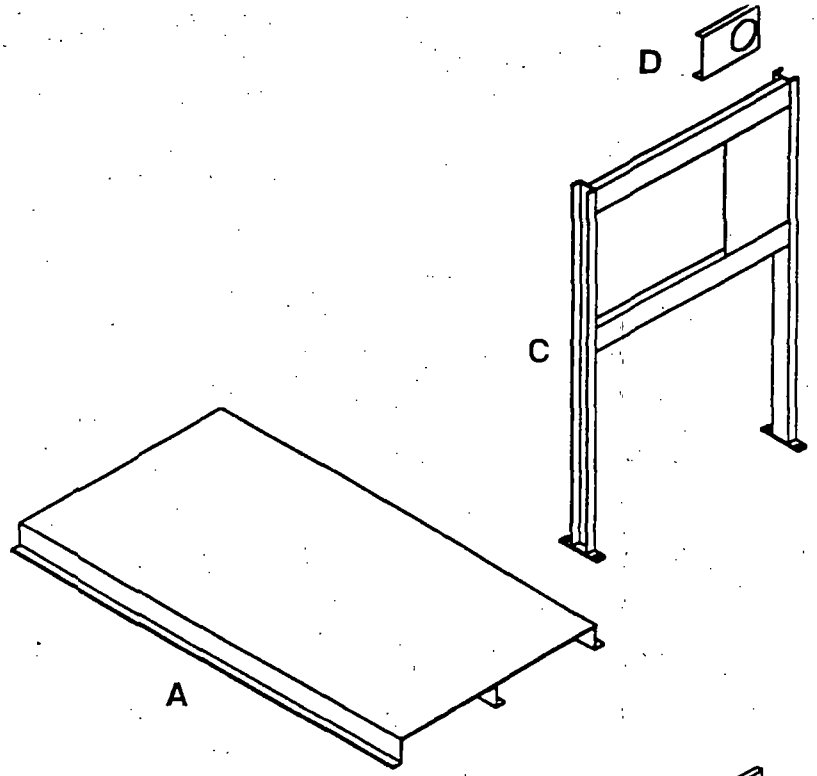

FRAMES FOR PLASTIC SYSTEMS

200-170-00041 Frame Assembly, 1300P Steel
A 1 500-170-00332 Frame,Steel,1300P
C 1 500-170-00045 Frame, control panel
D 1 500-170-00047 Instrument bracket

200-170-00042 Frame assembly, 2300P steel
A 1 500-170-00330 Frame,Steel,2300P
C 1 500-170-00045 Frame, control panel
D 1 500-170-00047 Instrument bracket

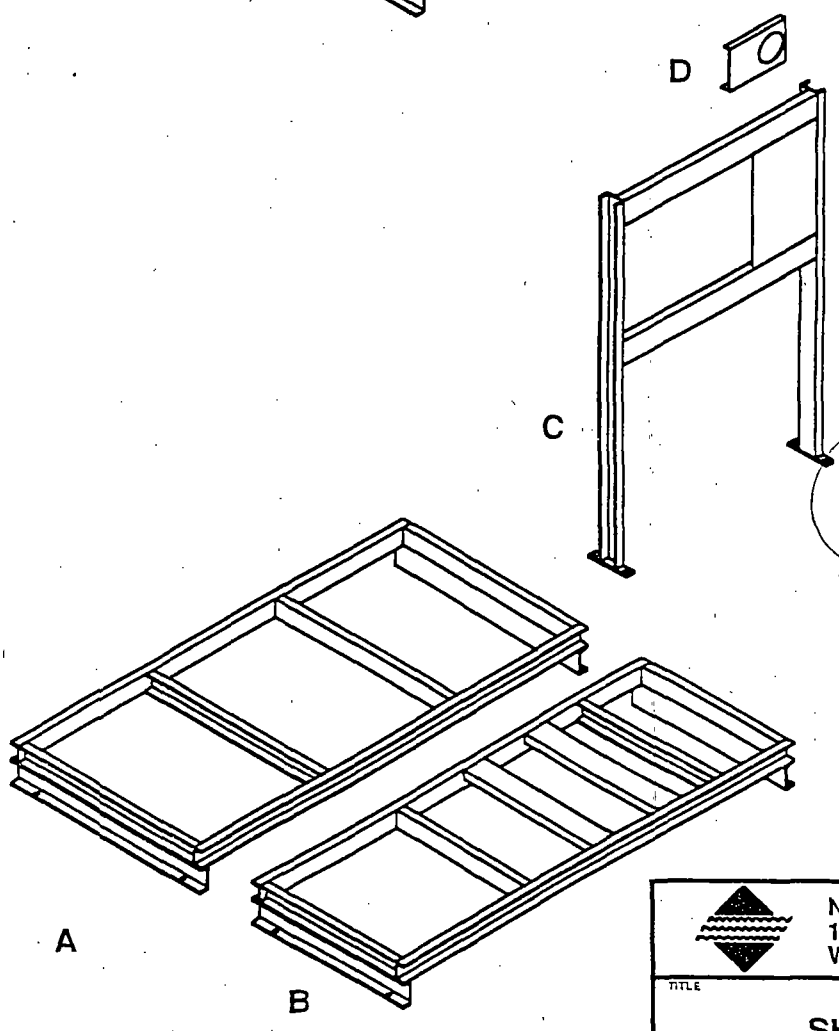

FRAMES FOR STAINLESS SYSTEMS

200-170-00030 Frame assembly, 1300
A 1 500-170-00021 Frame Tank, Steel, 1300
B 1 500-170-00031 Frame, Blower, Steel, 1300/2300
C 1 500-170-00045 Frame, control panel
D 1 500-170-00047 Instrument bracket

200-170-00031 Frame assembly, 2300
A 1 500-170-00041 Frame, Holding Tank, Steel, 2300
B 1 500-170-00031 Frame, Blower, Steel, 1300/2300
C 1 500-170-00045 Frame, control panel
D 1 500-170-00047 Instrument bracket

200-170-00032 Frame assembly, 2600
A 1 500-170-00051 Frame, Holding Tank,Steel 2600
B 1 500-170-00061 Frame, Blower, Steel 2600/3600
C 1 500-170-00045 Frame, control panel
D 1 500-170-00047 Instrument bracket

200-170-00033 Frame assembly, 3600
A 1 500-170-00071 Frame, Tank, Steel, 3600
B 1 500-170-00061 Frame, Blower, Steel 2600/3600
C 1 500-170-00045 Frame, control panel
D 1 500-170-00047 Instrument bracket

200-170-00034 Frame assembly 31200
A 1 500-170-00080 Frame, Tank, Steel, 31200
B 1 500-170-00091 Frame, Blower, Steel, 31200
C 1 500-170-00045 Frame, control panel
D 1 500-170-00047 Instrument bracket

200-170-00035 Frame assembly, 41200
A 1 500-170-00100 Frame,Tank,Steel 41200
B 1 500-170-00096 Frame, Blower, Steel, 41200
C 1 500-170-00045 Frame, control panel
D 1 500-170-00047 Instrument bracket

NORTH EAST ENVIRONMENTAL PRODUCTS, INC.
17 TECHNOLOGY DRIVE
WEST LEBANON, NEW HAMPSHIRE 03784

TITLE

SHALLOW TRAY FRAME OPTION

SIZE	DWG NO.	SHEET	REV
A	900-170-00020	1 OF 1	Ø

SCALE		DRAWN	DATE
NONE	DO NOT SCALE DRAWING	RC	11/4/96

3600 COUPLING LAYOUT

	PORT DESCRIPTION	SIZE
A	WATER INLET PORTS	3.0" FEMALE NPT FULL COUPLING
C	AIR INLET PORT	8.0" SLIP FIT RING FOR RUBBER COUPLING
D	SUMP DRAIN PORT TRAY SAMPLE PORT	1.0" FEMALE NPT HALF COUPLING
E	FLOAT SWITCH PORTS FOR GRAVITY DISCHARGE	0.5" FEMALE NPT FULL COUPLING
F	SIGHT TUBE PORTS	0.5" FEMALE NPT FULL COUPLING
G	AIR EXHAUST PORT	10.0" SLIP FIT RING FOR RUBBER COUPLING
H	SUMP TANK VIEW PORT	8.0" SLIP FIT RING FOR RUBBER CAP
J	AERATION TRAY VIEW PORT	4.0" SLIP FIT RING FOR RUBBER CAP
K	PRESSURE PORTS	0.5" FEMALE NPT FULL COUPLING
L	WATER OUTLET PORT	6.0" Backup Flange 6.0" Flange Stub End
P	FLOAT SWITCH PORTS FOR OUTLET PUMP	0.5" FEMALE NPT FULL COUPLING

TOP

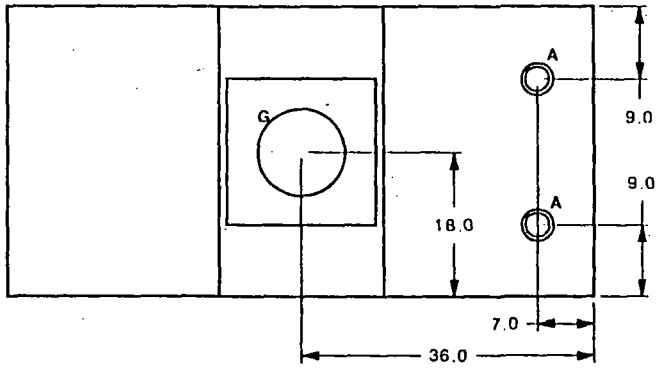

DIMENSION CHART (INCHES)

	X	Y	Z
3611	44.25	43.25	52.5
3621	53.5	52.5	61.75
3631	62.75	61.75	71.0
3641	72.0	71.0	80.25
3651	81.25	80.25	89.5

NOTE:
INCLUDES ADDITIONAL HEIGHT OF GASKET BETWEEN TRAYS AND COVER.

LEFT

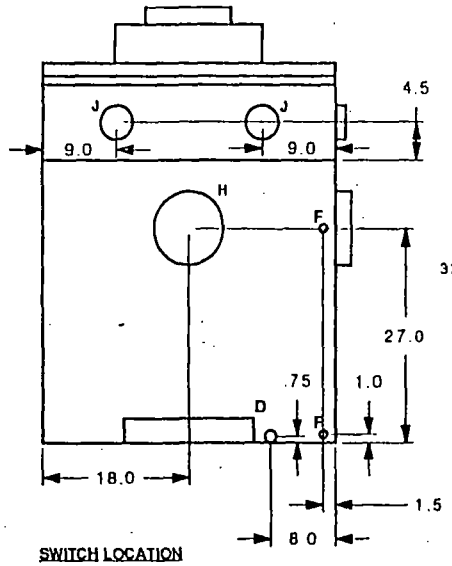

FRONT

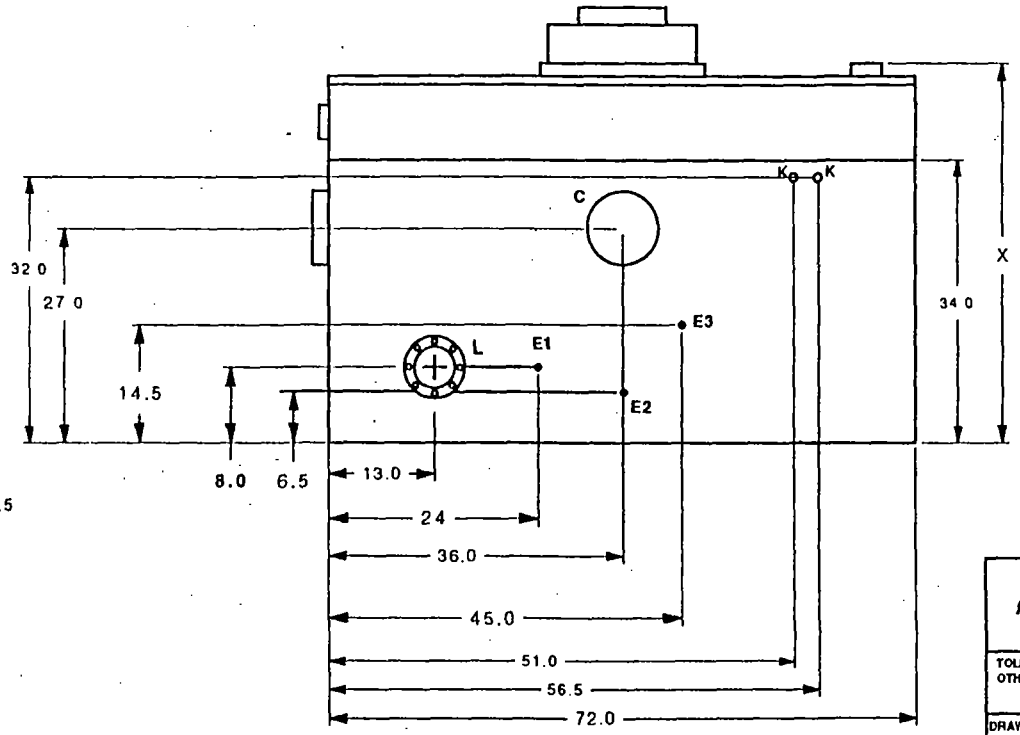

RIGHT

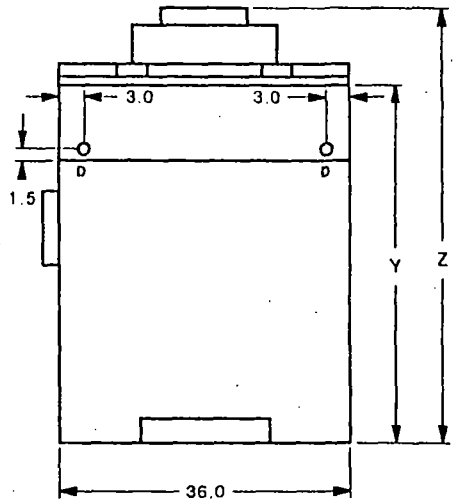

SWITCH LOCATION

E1	E2	E3	
			FLOAT SWITCH, NORMALLY OPEN
		X	FLOAT SWITCH, NORMALLY CLOSED
X	X		0.5" NPT PLUG

X INDICATES ITEM INSTALLED ON PORT

NORTH EAST ENVIRONMENTAL PRODUCTS, INC.
17 TECHNOLOGY DRIVE
WEST LEBANON, NH 03784
(603)-298-7061

TOLERANCES UNLESS OTHERWISE SPECIFIED ±.060 in	DRAWING NAME: COUPLING LAYOUT, 3600-9"
DRAWN BY: SC	DRAWING #: 900-160-00073
DATE: 7/10/96	SHEET: 1 OF: 1 / SIZE: A
REV: C	DRAWING SCALE: 1:20

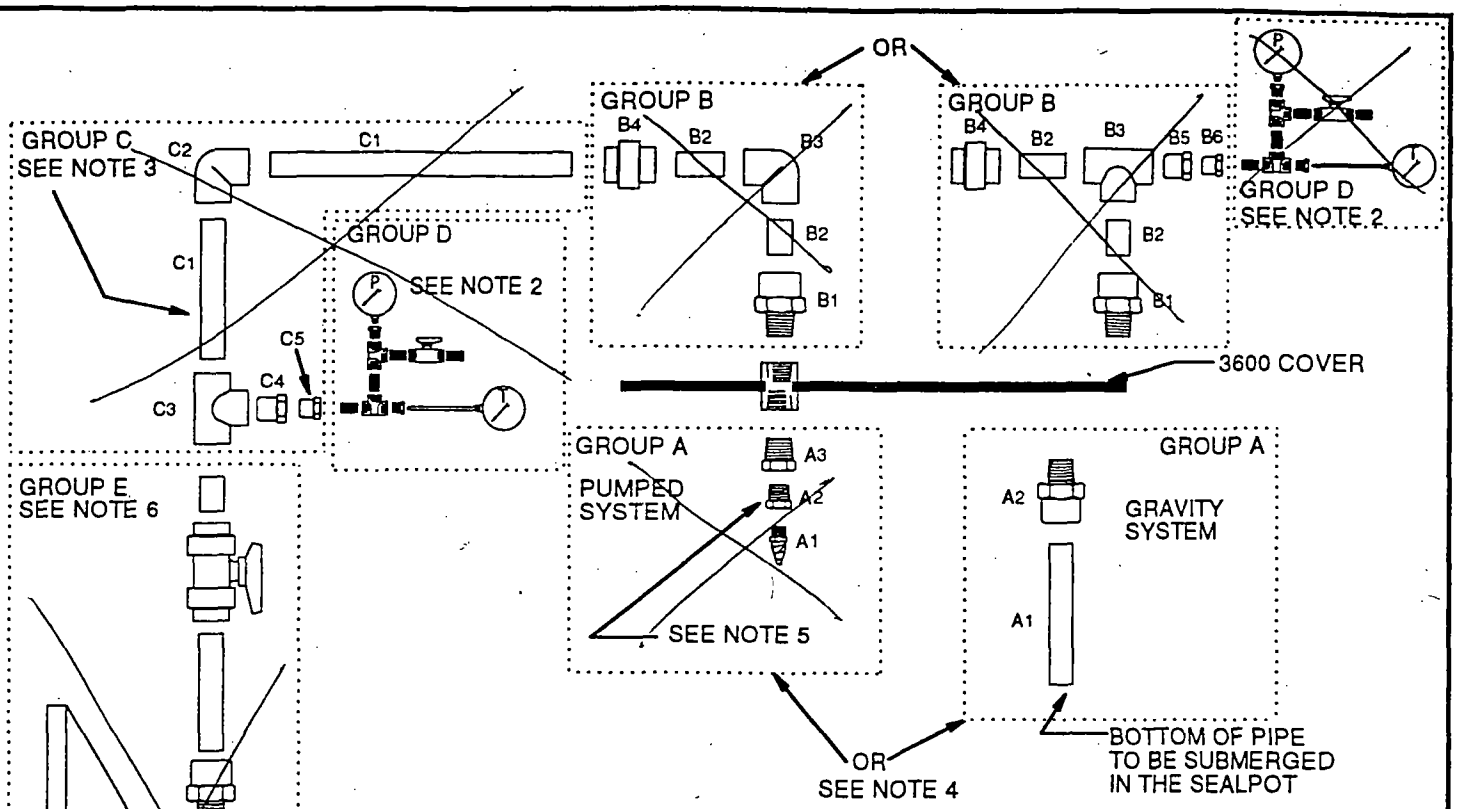

PUMP PORTS	
INLET	
OUTLET	

NOTES

1. DRAWING SHOWS MAXIMUM CONFIGURATION. ACTUAL PLUMBING SYSTEM MAY NOT CONTAIN ALL PARTS. SEE GROUP SELECTIONS ON SHEET 2 FOR ACTUAL SYSTEM.
2. SEE DRAWING 900-140-00009 FOR GROUP D DETAILS. GROUP D IS MOUNTED TO GROUP C WHEN GROUP C IS SELECTED, OTHERWISE GROUP D IS MOUNTED TO GROUP B.
3. PIPE LENGTH VARIES WITH NUMBER OF TRAYS.
   - 1 TRAY PIPE LENGTH ___ INCHES
   - 2 TRAY PIPE LENGTH ___ INCHES
   - 3 TRAY PIPE LENGTH ___ INCHES
   - 4 TRAY PIPE LENGTH ___ INCHES
   - 5 TRAY PIPE LENGTH ___ INCHES
4. GRAVITY SYSTEMS HAVE STRAIGHT TUBE INSTALLED. PUMPED SYSTEMS HAVE NOZZLE OPTION INSTALLED.
5. BUSHING NOT USED WITH LARGE NOZLE.
6. PIPE LENGHT BEFORE AND AFTER FLOWMETER MUST BE FIVE DIAMETERS IN LENGTH. SEE DRAWING NUMBER 900-140-00019 FOR GROUP E SELECTION DETAILS.

DESIGN FLOW RATE
120 GPM

NORTH EAST ENVIRONMENTAL PRODUCTS, INC.
17 TECHNOLOGY DRIVE
WEST LEBANON, NEW HAMPSHIRE 03784

TITLE: **3600 INLET PLUMBING SYSTEM PVC 80**

SIZE	DWG NO	SHEET	REV
A	900-140-00018	1 OF 2	Ø

SCALE		DRAWN	DATE
NONE	DO NOT SCALE DRAWING	RC	8-31-94

PLUMBING SYSTEM SELECTION

SELECT ONE FROM EACH APPLICABLE GROUP

GROUP A

☐ **200-140-01260 NOZZLE (3 TO 14GPM)**
A1 1 500-140-00170 Nozzle,14.5gpm@15psi,.5,Brass
A2 1 500-140-00500 Bushing,2.0Mx.5F,TxT,PVC80
A3 1 500-140-00629 Bushing,3.0Mx2.0F,TxT,PVC 80

☐ **200-140-01261 NOZZLE (14 TO 50 GPM)**
A1 1 500-140-00220 Nozzle,78.5gpm@15psi,1.5,Brass
A2 1 500-140-00570 Bushing,2.0Mx1.5F,TxT,PVC80
A3 1 500-140-00629 Bushing,3.0Mx2.0F,TxT,PVC 80

☐ **200-140-01262 NOZZLE (50 TO 135GPM)**
A1 1 500-140-00232 Nozzle,169gpm@15psi,2.0,Brass,
A3 1 500-140-00629 Bushing,3.0Mx2.0F,TxT,PVC 80

☑ **200-140-01263 GRAVITY (3" PIPE)**
A1 10" 500-140-01700 Pipe,3.0",PVC 80
A2 1 500-140-01130 Adapter,3.0Mx3.0F,TxS, PVC 80

GROUP B

☐ **200-140-01264 ENTRY ELBOW**
B1 1 500-140-01130 Adapter,3.0Mx3.0F,TxS, PVC 80
B2 12" 500-140-01700 Pipe,3.0",PVC 80
B3 1 500-140-00890 Elbow,90,3.0Fx3.0F,SxS,PVC 80
B4 1 500-140-01270 Union,3.0,SxS,PVC80

☐ **200-140-01265 ENTRY MANIFOLD**
B1 1 500-140-01130 Adapter,3.0Mx3.0F,TxS, PVC 80
B2 12" 500-140-01700 Pipe,3.0",PVC 80
B3 1 500-140-01020 Tee,3.0",S,PVC80
B4 1 500-140-01270 Union,3.0,SxS,PVC80
B5 1 500-140-00610 Bushing,3.0Mx1.0F,SxS,PVC80
B6 1 500-140-00300 Bushing,1.0Mx.5F,SxT,PVC80

GROUP C

☐ **200-140-01266 TRAY EXTENDER (1 TRAY)**
C1 30" 500-140-01700 Pipe,3.0",PVC 80
C2 1 500-140-00890 Elbow,90,3.0Fx3.0F,SxS,PVC 80
C3 1 500-140-01020 Tee,3.0",S,PVC80
C4 1 500-140-00610 Bushing,3.0Mx1.0F,SxS,PVC80
C5 1 500-140-00300 Bushing,1.0Mx.5F,SxT,PVC80

☐ **200-140-01267 TRAY EXTENDER (2 TRAY)**
C1 40" 500-140-01700 Pipe,3.0",PVC 80
C2 1 500-140-00890 Elbow,90,3.0Fx3.0F,SxS,PVC 80
C3 1 500-140-01020 Tee,3.0",S,PVC80
C4 1 500-140-00610 Bushing,3.0Mx1.0F,SxS,PVC80
C5 1 500-140-00300 Bushing,1.0Mx.5F,SxT,PVC80

☐ **200-140-01268 TRAY EXTENDER (3 TRAY)**
C1 50" 500-140-01700 Pipe,3.0",PVC 80
C2 1 500-140-00890 Elbow,90,3.0Fx3.0F,SxS,PVC 80
C3 1 500-140-01020 Tee,3.0",S,PVC80
C4 1 500-140-00610 Bushing,3.0Mx1.0F,SxS,PVC80
C5 1 500-140-00300 Bushing,1.0Mx.5F,SxT,PVC80

☐ **200-140-01269 TRAY EXTENDER (4 TRAY)**
C1 60" 500-140-01700 Pipe,3.0",PVC 80
C2 1 500-140-00890 Elbow,90,3.0Fx3.0F,SxS,PVC 80
C3 1 500-140-01020 Tee,3.0",S,PVC80
C4 1 500-140-00610 Bushing,3.0Mx1.0F,SxS,PVC80
C5 1 500-140-00300 Bushing,1.0Mx.5F,SxT,PVC80

☐ **200-140-01270 TRAY EXTENDER (5 TRAY)**
C1 70" 500-140-01700 Pipe,3.0",PVC 80
C2 1 500-140-00890 Elbow,90,3.0Fx3.0F,SxS,PVC 80
C3 1 500-140-01020 Tee,3.0",S,PVC80
C4 1 500-140-00610 Bushing,3.0Mx1.0F,SxS,PVC80
C5 1 500-140-00300 Bushing,1.0Mx.5F,SxT,PVC80

GROUP F

☐ **200-140-01275 PUMP (2" OUTLET PORT)**
F1 12" 500-140-01700 Pipe,3.0",PVC 80
F2 1 500-140-01130 Adapter,3.0Mx3.0F,TxS, PVC 80
F3 1 500-140-02468 Coupling,Reducer,3.0Fx2.0F,TxT
F4 1 500-140-03210 Nipple,2.0xClose,TxT,Brass

☐ **200-140-01276 PUMP (1.5" OUTLET PORT)**
F1 12" 500-140-01700 Pipe,3.0",PVC 80
F2 1 500-140-01130 Adapter,3.0Mx3.0F,TxS, PVC 80
F3 1 500-140-02467 Coupling,reducer,3.0Fx1.5F,TxT
F4 1 500-140-03170 Nipple,1.5xClose,TxT,Brass

GROUP D

☐ SEE DRAWING N° 900-140-00009
FOR GROUP D SELECTION

GROUP E

☐ SEE DRAWING N° 900-140-00019
FOR GROUP E SELECTION

NORTH EAST ENVIRONMENTAL PRODUCTS, INC.
17 TECHNOLOGY DRIVE
WEST LEBANON, NEW HAMPSHIRE 03784

TITLE: 3600 INLET PLUMBING SYSTEM PVC 80

SIZE	DWG NO.	SHEET	REV
A	900-140-00018	2 OF 2	Ø

SCALE		DRAWN	DATE
NONE	DO NOT SCALE DRAWING	RC	8-31-94

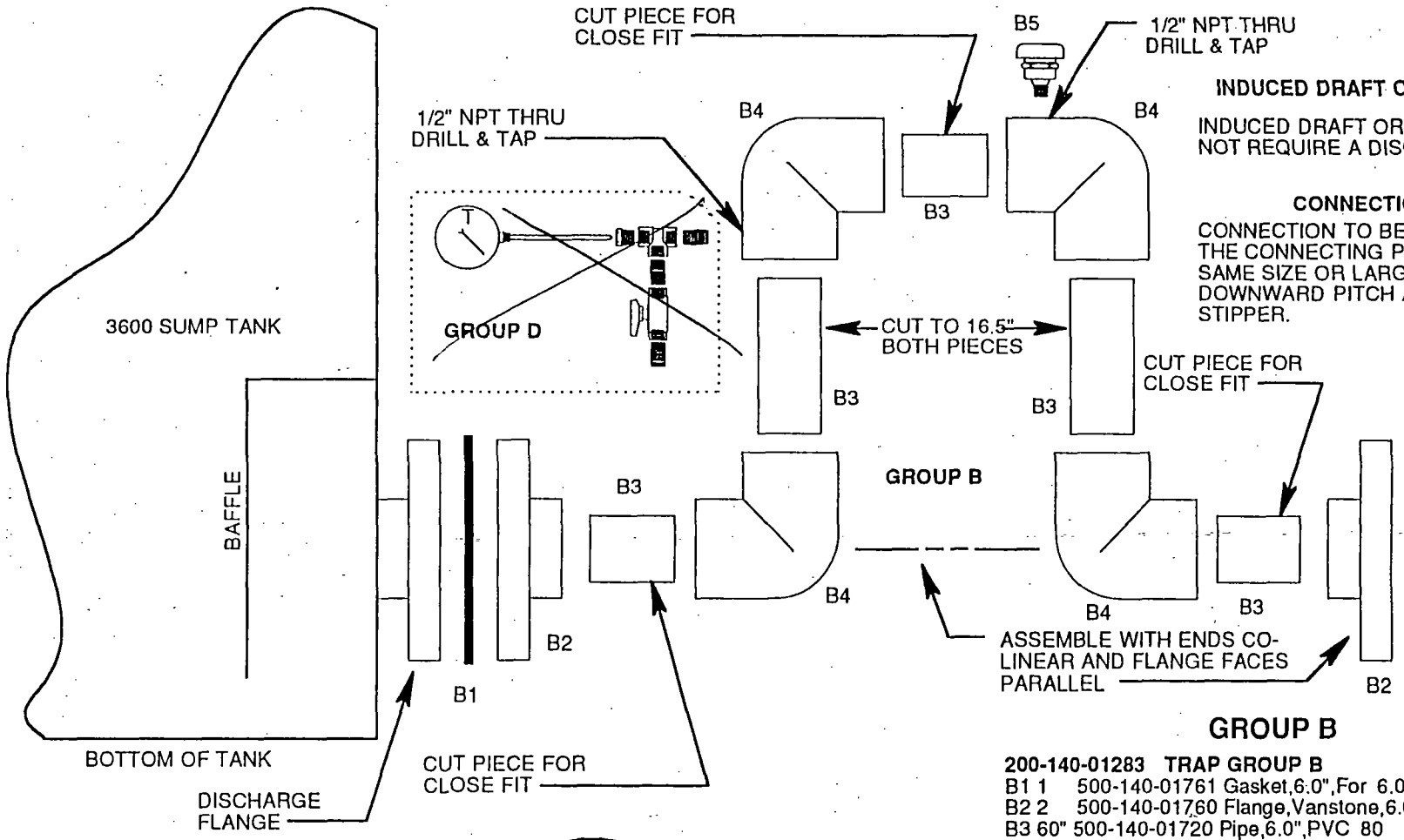

INDUCED DRAFT OR PUMPED SYSTEMS

INDUCED DRAFT OR PUMPED SYSTEMS DO NOT REQUIRE A DISCHARGE TRAP.

CONNECTION NOTE

CONNECTION TO BE MADE WITH A FLANGE. THE CONNECTING PIPE MUST BE OF THE SAME SIZE OR LARGER AND MUST HAVE A DOWNWARD PITCH AWAY FROM THE STIPPER.

GROUP B

200-140-01283 TRAP GROUP B

B1	1	500-140-01761 Gasket,6.0",For 6.0" Vanstone
B2	2	500-140-01760 Flange,Vanstone,6.0",Socket,PV
B3	60"	500-140-01720 Pipe,6.0",PVC 80
B4	4	500-140-00920 Elbow,90,6.0Fx6.0F,SxS,PVC80
B5	1	500-140-00060 Valve,Vacuum Relief 1/2"

GROUP D

SEE DRAWING 900-140-00009 FOR GROUP D DETAILS

TRAP HEIGHT ADJUSTMENT

THE SUMP OPERATING LEVEL IS ADJUSTED BY CHANGING THE HEIGHT OF THE DISCHARGE TRAP. THE TRAP IS TILTED AND HEIGHT MEASURED FROM BOTTOM OF SUMP TANK TO BOTTOM OF UPPER MOST HORIZONTAL PIPE. THE DIMENSION INDICATES THE INITIAL FACTORY ADJUSTMENT. THE GOAL IS TO KEEP 4 TO 6" OF WATER IN THE SUMP DURING NORMAL OPERATION. AIR SHOULD NEVER BLOW OUT OF TRAP.

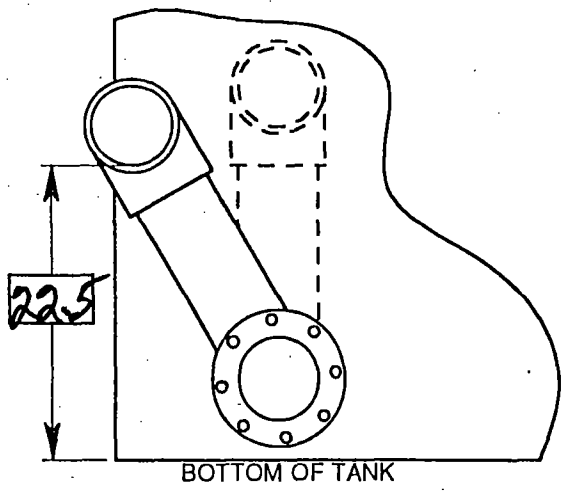

NORTH EAST ENVIRONMENTAL PRODUCTS, INC.
17 TECHNOLOGY DRIVE
WEST LEBANON, NEW HAMPSHIRE 03784

TITLE: 3600 OUTLET PLUMBING (GRAVITY) DISCHARGE TRAP

SIZE	DWG NO.	SHEET	REV
A	900-140-00035	1 OF 1	A

SCALE		DRAWN	DATE
NONE	DO NOT SCALE DRAWING	RC	6/28/96

AIR PRESSURE GAGE

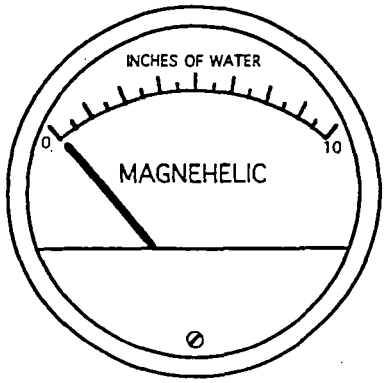

NOTES

1 PRESSURE LINE SHUT-OFF VALVE SHOULD BE CLOSED UNTIL A READING IS NEEDED. THIS WILL PREVENT CONDENSATION FROM BUILDING UP AND FLOODING THE GAGE.

☐ PRESSURE SYSTEM
CONNECT HOSEBARB AND TUBING TO HIGH PRESSURE PORT ON GAGE. LEAVE LOW PRESSURE PORT OPEN TO ATMOSPHERE. CONNECT AT AIR STRIPPER SUMP TANK.

☐ VACUUM SYSTEM
CONNECT HOSEBARB AND TUBING TO LOW PRESSURE PORT ON GAGE. LEAVE HIGH PRESSURE PORT OPEN TO ATMOSPHERE. CONNECT AT AIR STRIPPER STACK.

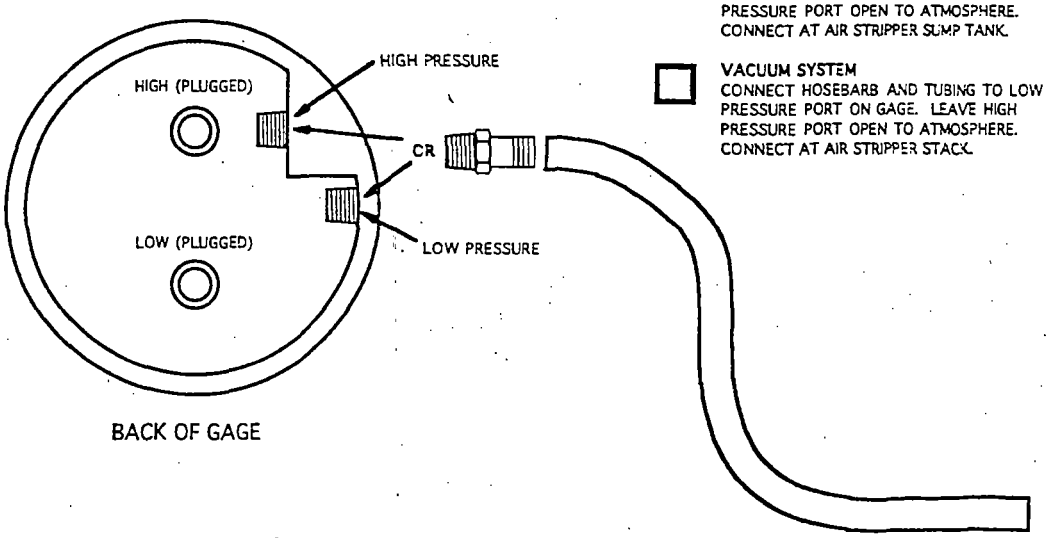

BACK OF GAGE

☐ 200-130-00209 Air pressure gauge SUB 0-5"wc
•1 500-130-00035 Gauge,Air Pressure,0-5"WC
•4' 500-200-00145 Tubing Air3/16IDx5/16OD

☐ 200-130-00210 Air pressure gauge SUB 0-10"wc
•1 500-130-00040 Gauge Air Pressure, 0-10"WC
•4' 500-200-00145 Tubing Air3/16IDx5/16OD

☐ 200-130-00211 Air pressure gauge SUB 0-15"wc
•1 500-130-00050 Gauge Air Pressure0-15"WC
•4' 500-200-00145 Tubing Air3/16IDx5/16OD

☐ 200-130-00212 Air pressure gauge SUB 0-20"wc
•1 500-130-00060 Gauge Air Pressure0-20"WC
•4' 500-200-00145 Tubing Air3/16IDx5/16OD

☐ 200-130-00213 Air pressure gauge SUB 0-30"wc
•1 500-130-00065 Gauge Air Pressure 0-30"
•4' 500-200-00145 Tubing Air3/16IDx5/16OD

☑ 200-130-00214 Air pressure gauge SUB 0-40"wc
•1 500-130-00066 Gauge, Air Pressure,0-40"WC
•4' 500-200-00145 Tubing Air3/16IDx5/16OD

☐ 200-130-00215 Air pressure gauge SUB 0-60"wc
•1 500-130-00068 Gauge,Air Pressure,0-60"wc
•4' 500-200-00145 Hose,3/16id x 5/16od,Tygon,cle

NORTH EAST ENVIRONMENTAL PRODUCTS, INC.
17 TECHNOLOGY DRIVE
WEST LEBANON, NEW HAMPSHIRE 03784

AIR PRESSURE GAGE

A	900-130-00012	1 of 1	Ø
NONE	DO NOT SCALE DRAWING	RC	10-31-94

LOW AIR PRESSURE/VACUUM SWITCH

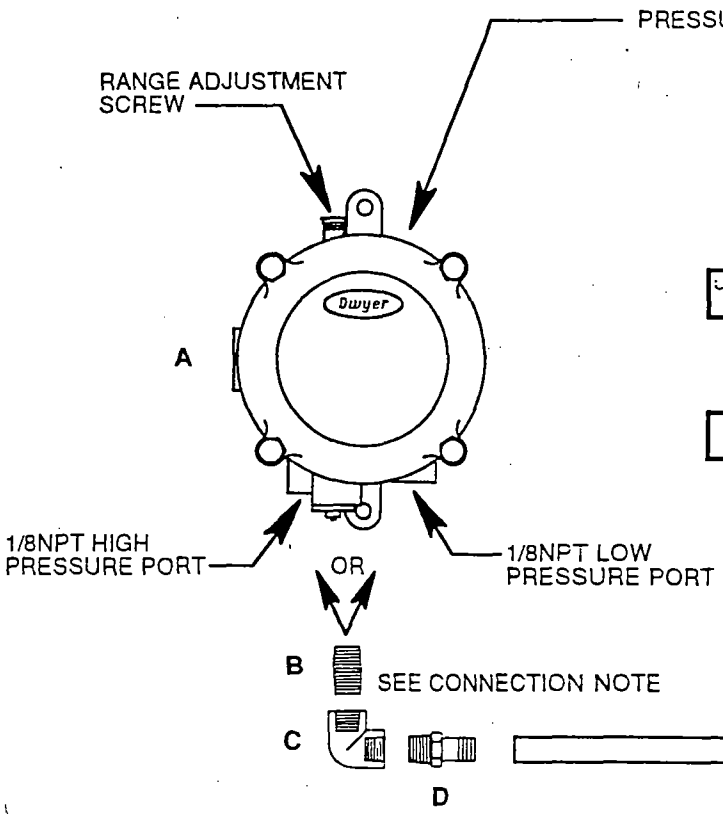

CONNECTION NOTE

☑ **LOW AIR PRESSURE SYSTEM**
CONNECT FITTINGS TO HIGH PESSURE PORT OF PRESSURE DIFFERENTIAL SWITCH, LEAVE LOW PRESSURE PORT OPEN. STRIPPER CONNECTION ON SUMP TANK

☐ **LOW VACUUM SYSTEM**
CONNECT FITTINGS TO LOW PESSURE PORT OF PRESSURE DIFFERENTIAL SWITCH, LEAVE HIGH PRESSURE PORT OPEN. STRIPPER CONNECTION ON STACK

TO AIR STRIPPER
SEE CONNECTION NOTE

200-130-00201 LOW press/vac switch .4-1.6"wc

A 500-130-00070 Switch Air Pressure, .4-1.6" WC
B 500-140-02960 Nipple,.125xClose,TxT,Brass
C 500-140-02490 Elbow,90,.125Fx.125F,TxT,Brass
E 500-200-00145 Hose,3/16id x 5/16od,Tygon,cle

NORTH EAST ENVIRONMENTAL PRODUCTS, INC.
17 TECHNOLOGY DRIVE
WEST LEBANON, NEW HAMPSHIRE 03784

TITLE: LOW AIR PRESSURE/VACUUM SWITCH

SIZE	DWG NO.	SHEET	REV
A	900-130-00011	1 OF 1	Ø

SCALE		DRAWN	DATE
NONE	DO NOT SCALE DRAWING	RC/MS	9-22-94

FLOAT SWITCH

MECHANICAL

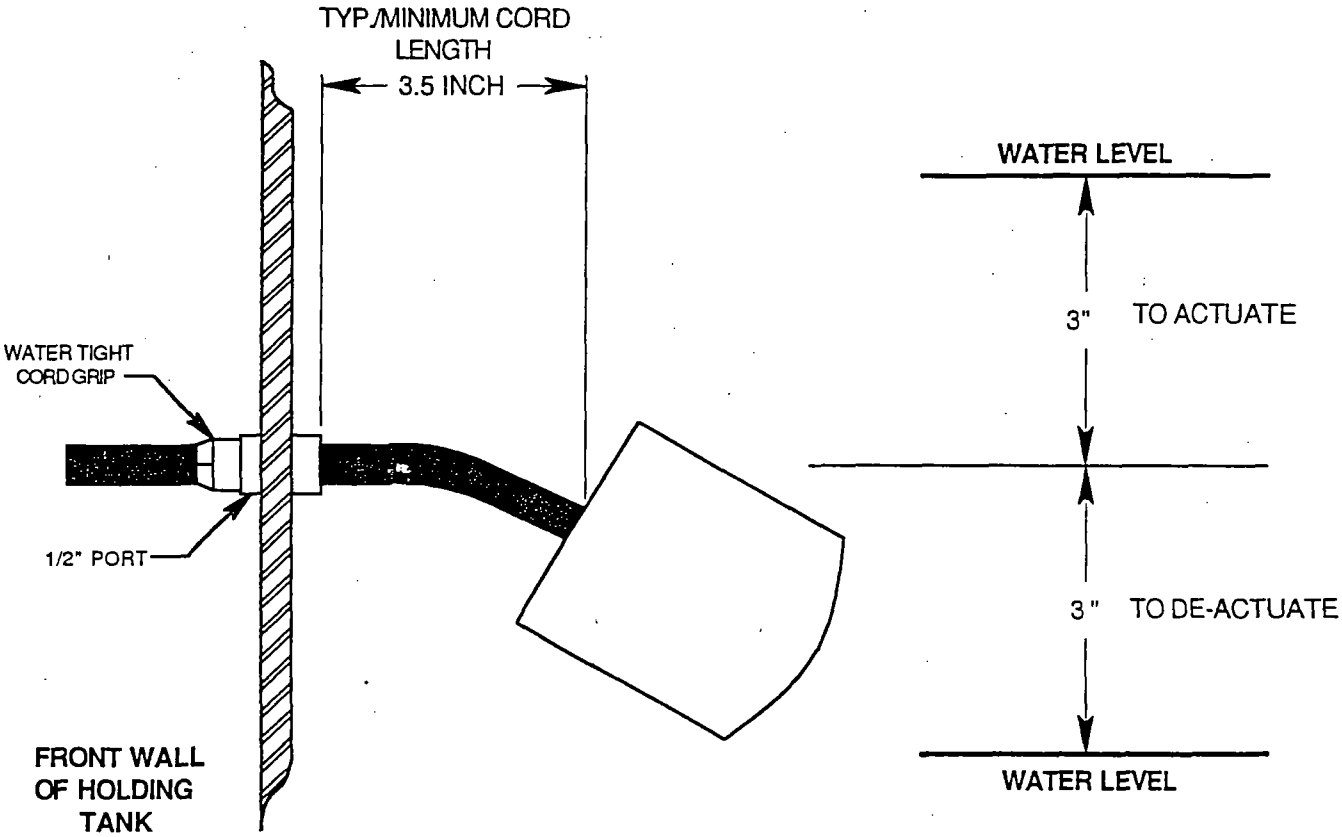

2	**200-120-00310 FLOAT SWITCH, N.O., 10' CORD** 1 500-120-02521 Switch,float,N.O.,mech,10ft cord 1 500-120-02490 Cord,Watertight,1/2",Bulkhead
1	**200-120-00311 FLOAT SWITCH, N.C., 10' CORD** 1 500-120-02522 Switch,float,N.C.,mech,10ft cord 1 500-120-02490 Cord,Watertight,1/2",Bulkhead

NOTE:
WATER TIGHT CORD GRIP TO BE MOUNTED INSIDE THE TANK FOR EXP UNITS.

	EXP MOUNT CORD GRIP INSIDE TANK
✓	TEFC MOUNT CORD GRIP OUTSIDE TANK

SEE COUPLING LAYOUT FOR SWITCH LOCATION.

NORTH EAST ENVIRONMENTAL PRODUCTS, INC.
17 TECHNOLOGY DRIVE
WEST LEBANON, NH 03784
(603)-298-7061

TOLERANCES UNLESS OTHERWISE SPECIFIED ±.050 In.	DRAWING NAME: FLOAT SWITCH (MECHANICAL)		
DRAWN BY: MS	DRAWING #: 900-120-00029		
DATE: 8/31/94	SHEET: 1 OF: 1	SIZE: A	
RC - 3/14/95	DRAWING SCALE: 20 TO 1		

PARTS LIST

A	500-140-00110	Nozzle,MEG,1/4",25,05
B	500-140-00075	Elbow,90,.25Fx.25F,90,TxT,galv
C	500-140-00085	Wand Washer Extension,36"
D	500-140-00115	Coupling,.25fx.25f,,txt,galv
E	500-140-00086	Wand Washer Extension,72"
F	200-140-00035	Wheel assembly
G	500-140-04320	Nipple ø1/4" x 3" long, black steel
H	500-140-04330	Tee 1/4" black steel

SELECT ONE

200-140-00033
12FEET 2 PIECE
[31200 & 41200]
TRAY BIDET OPTION

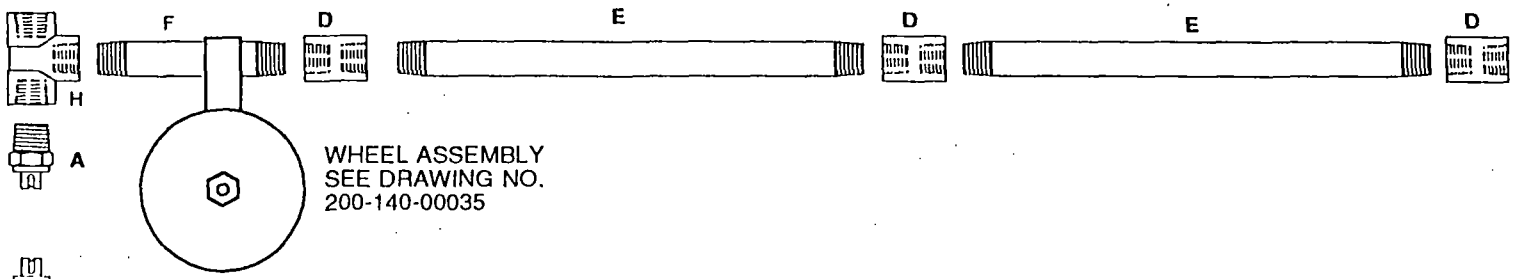

WHEEL ASSEMBLY
SEE DRAWING NO.
200-140-00035

200-140-00031
12 FEET 2 PIECE
[31200 & 41200]

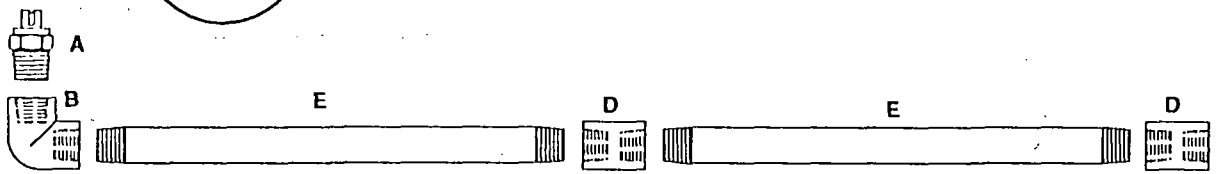

200-140-00032
6 FEET ONE PIECE
[2600 & 3600]

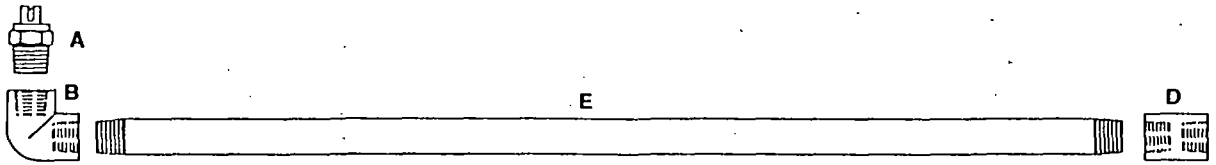

200-140-00034
6 FEET 2 PIECE
[2600 & 3600]

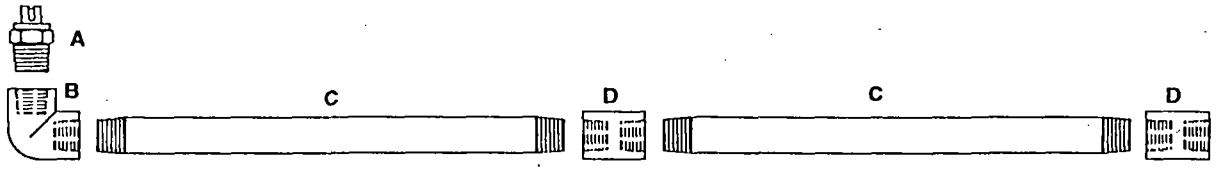

200-140-00030
3 FEET ONE PIECE
[1300 & 2300]

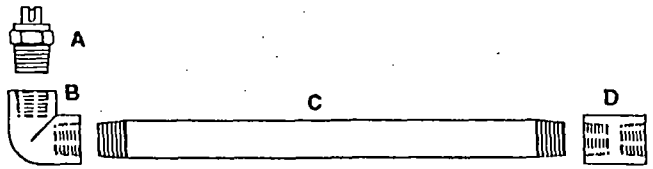

NORTH EAST ENVIRONMENTAL PRODUCTS, INC.
17 TECHNOLOGY DRIVE
WEST LEBANON, NEW HAMPSHIRE 03784

TITLE: WASHER WAND ASSEMBLY

SIZE	DWG NO.	SHEET	REV
A	900-140-00110	1 OF 1	A

SCALE		DRAWN	DATE
NONE	DO NOT SCALE DRAWING	RC	1-8-96

CHOOSE ONE SIGHT TUBE:

(NOTE THAT BRASS SIGHT TUBES ARE ALREADY PART OF THE BASE SUBASSEMBLY, AND THE STAINLESS SIGHT TUBE SUBS ARE AN OPTION).

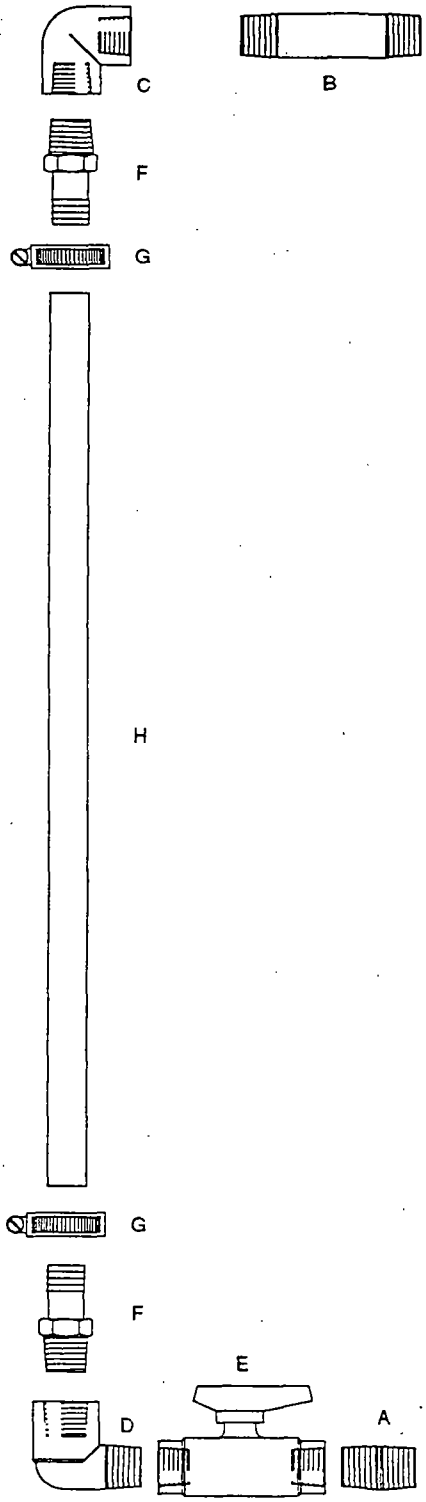

BRASS
(STANDARD)

☑ **200-140-00010**
SIGHT TUBE, BRASS, FOR 1300/2300/2600/3600

1	A	500-140-02980, NIPPLE, .5XCLOSE, TXT, BRASS
1	B	500-140-03030, NIPPLE, .5X3.5L, TXT, BRASS
1	C	500-140-02510, ELBOW, 90°, .5FX.5F, TXT, BRASS
1	D	500-140-02520, ELBOW, STREET, 90°, .5FX.5M, TXT, BRASS
1	E	500-140-02740, VALVE, BALL, .5FX.5F, TXT, BRASS
2	F	500-140-02890, HOSE BARB, .5MX.5M, TXB, BRASS
2	G	500-140-00030, HOSE CLAMP, .41-.88, SS
21"	H	500-200-00150, TUBE, CLEAR, .5 ID, TYGON

☐ **200-140-00020**
SIGHT TUBE, BRASS, FOR 31200/41200

1	A	500-140-02980, NIPPLE, .5XCLOSE, TXT, BRASS
1	B	500-140-03030, NIPPLE, .5X3.5L, TXT, BRASS
1	C	500-140-02510, ELBOW, 90°, .5FX.5F, TXT, BRASS
1	D	500-140-02520, ELBOW, STREET, 90°, .5FX.5M, TXT, BRASS
1	E	500-140-02740, VALVE, BALL, .5FX.5F, TXT, BRASS
2	F	500-140-02890, HOSE BARB, .5MX.5M, TXB, BRASS
2	G	500-140-00030, HOSE CLAMP, .41-.88, SS
29"	H	500-200-00150, TUBE, CLEAR, .5 ID, TYGON

STAINLESS STEEL
(OPTIONAL)

☐ **200-140-00011**
SIGHT TUBE, 316 ST. STEEL, FOR 1300/2300/2600/3600

1	A	500-140-04010, NIPPLE, .5XCLOSE, TXT, 316SS
1	B	500-140-04012, NIPPLE, .5X3.5L, TXT, 316SS
1	C	500-140-03995, ELBOW, 90°, .5FX.5F, TXT, 316SS
1	D	500-140-03996, ELBOW, STREET, 90°, .5FX.5M, TXT, 316SS
1	E	500-140-04030, VALVE, BALL, .5FX.5F, TXT, 316SS
2	F	500-140-04000, HOSE BARB, .5MX.5M, TXB, 316SS
2	G	500-140-00030, HOSE CLAMP, .41-.88, SS
21"	H	500-200-00151, TUBE, CLEAR, .5 ID, TEFLON

☐ **200-140-00021**
SIGHT TUBE, 316 ST. STEEL, FOR 31200/41200

1	A	500-140-04010, NIPPLE, .5XCLOSE, TXT, 316SS
1	B	500-140-04012, NIPPLE, .5X3.5L, TXT, 316SS
1	C	500-140-03995, ELBOW, 90°, .5FX.5F, TXT, 316SS
1	D	500-140-03996, ELBOW, STREET, 90°, .5FX.5M, TXT, 316SS
1	E	500-140-04030, VALVE, BALL, .5FX.5F, TXT, 316SS
2	F	500-140-04000, HOSE BARB, .5MX.5M, TXB, 316SS
2	G	500-140-00030, HOSE CLAMP, .41-.88, SS
29"	H	500-200-00150, TUBE, CLEAR, .5 ID, TYGON

NORTH EAST ENVIRONMENTAL PRODUCTS, INC.
17 TECHNOLOGY DRIVE
WEST LEBANON, NEW HAMPSHIRE 03784

SIGHT TUBE SUBASSEMBY			
SIZE A	900-140-00044	SHEET 1 of 1	REV B
SCALE NONE	DO NOT SCALE DRAWING	DRAWN RC	DATE 9/16/96

CHOOSE ONE DRAIN VALVE.

(NOTE THAT BRASS DRAIN VALVES ARE ALREADY PART OF THE BASE SUBASSEMBLY, AND THE STAINLESS DRAIN VALVE SUBS ARE AN OPTION).

BRASS
(STANDARD)

☑ **200-140-00142**
DRAIN VALVE, BRASS, 1", FOR 13/23/26/36

1	A	500-140-03060, NIPPLE, 1.0XCLOSE, TXT, BRASS
1	B	500-140-02780, VALVE, BALL,1.0FX1.0F, TXT, BRASS

☐ **200-140-00141**
DRAIN VALVE, BRASS, 2", FOR 312/412

1	A	500-140-03250, NIPPLE, 2.0XCLOSE, TXT, BRASS
1	B	500-140-02760, VALVE, BALL,2.0FX2.0F, TXT, BRASS

316 STAINLESS STEEL
(OPTIONAL)

☐ **200-140-00145**
DRAIN VALVE, 316 ST. STEEL, 1/2", FOR 1300P

1	A	500-140-04010, NIPPLE, .5XCLOSE, TXT, 316SS
1	B	500-140-04030, VALVE, BALL, .5FX.5F, TXT, 316SS

☐ **200-140-00148**
DRAIN VALVE, 316 ST. STEEL, 3/4", FOR 2300P

1	A	500-140-04011, NIPPLE, .75XCLOSE, TXT, 316SS
1	B	500-140-04031, VALVE, BALL, .75FX.75F, TXT, 316SS

☐ **200-140-00140**
DRAIN VALVE, 316 ST. STEEL, 1", FOR 13/23/26/36

1	A	500-140-04014, NIPPLE, 1.0XCLOSE, TXT, 316SS
1	B	500-140-04032, VALVE, BALL,1.0FX1.0F, TXT, 316SS

☐ **200-140-00147**
DRAIN VALVE, 316 ST. STEEL, 2", FOR 312/412

1	A	500-140-04022, NIPPLE, 2.0XCLOSE, TXT, 316SS
1	B	500-140-04035, VALVE, BALL,2.0FX2.0F, TXT, 316SS

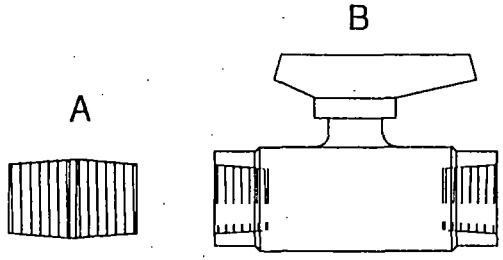

NORTH EAST ENVIRONMENTAL PRODUCTS, INC.
17 TECHNOLOGY DRIVE
WEST LEBANON, NEW HAMPSHIRE 03784

TITLE: DRAIN VALVE SUBASSEMBY

SIZE	DRAWING NO.	SHEET	REV
A	900-140-00045	1 of 1	A

SCALE		DRAWN	DATE
NONE	DO NOT SCALE DRAWING	RC	9/16/96

AERATION PROCESS, COUNTER-CURRENT AIR AND WATER FLOW

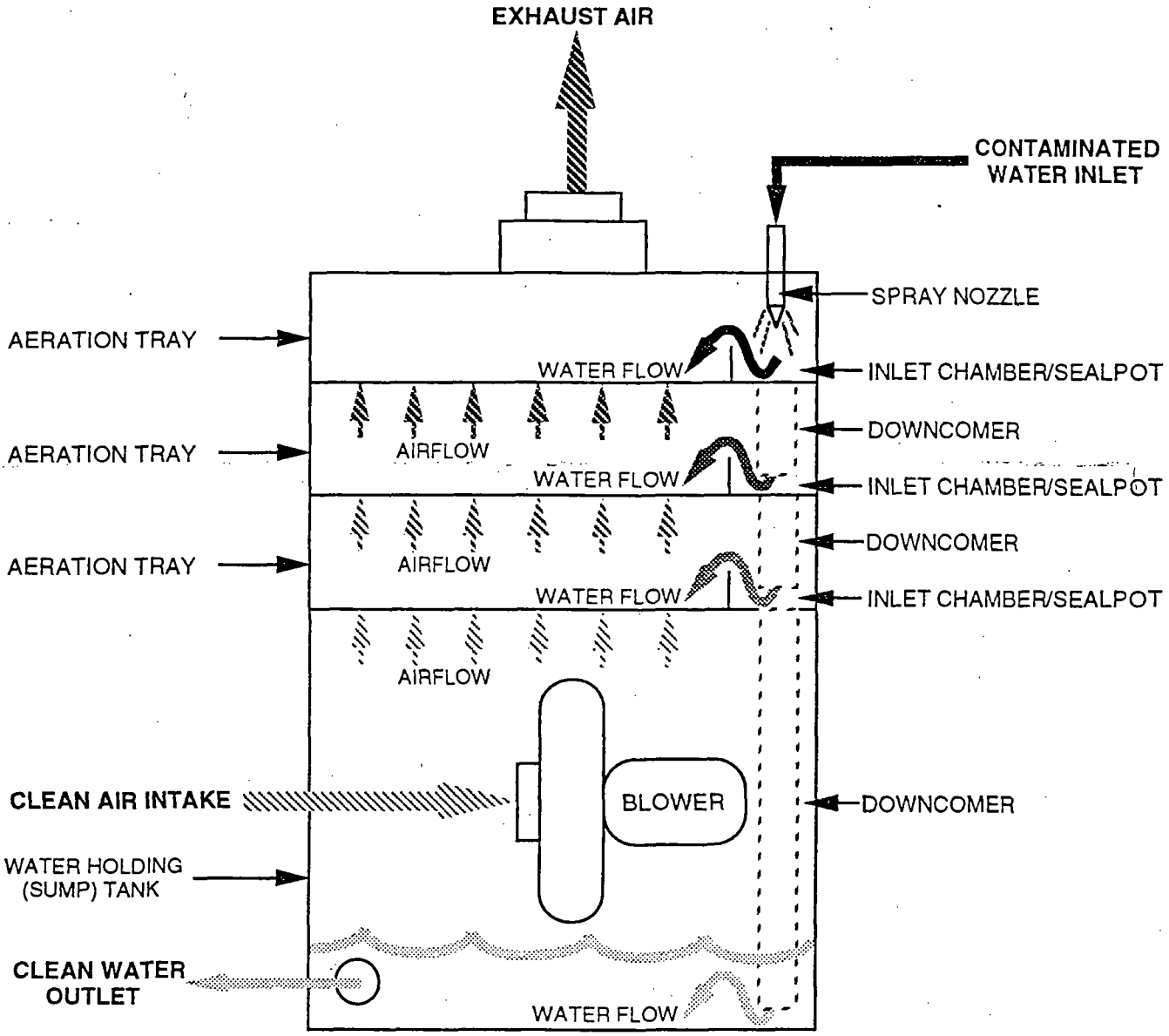

FOR REFERENCE ONLY !

DO NOT ASSEMBLE PER THIS DRAWING. SEE DRAWINGS THAT ARE SPECIFIC TO THIS UNIT.

NORTH EAST ENVIRONMENTAL PRODUCTS, INC.
17 TECHNOLOGY DRIVE
WEST LEBANON, NH 03784
(603) 298-7061

TOLERANCES UNLESS OTHERWISE SPECIFIED ±1 in.	DRAWING NAME: AERATION PROCESS		
	DRAWING #: 900-200-00003		
DRAWN: MS DATE: 1/11/93	CUSTOMER:		
REV: A 3/9/94	SCALE:	SIZE: A	SHEET : OF:

TYPICAL VENT LINE INSTALLATION

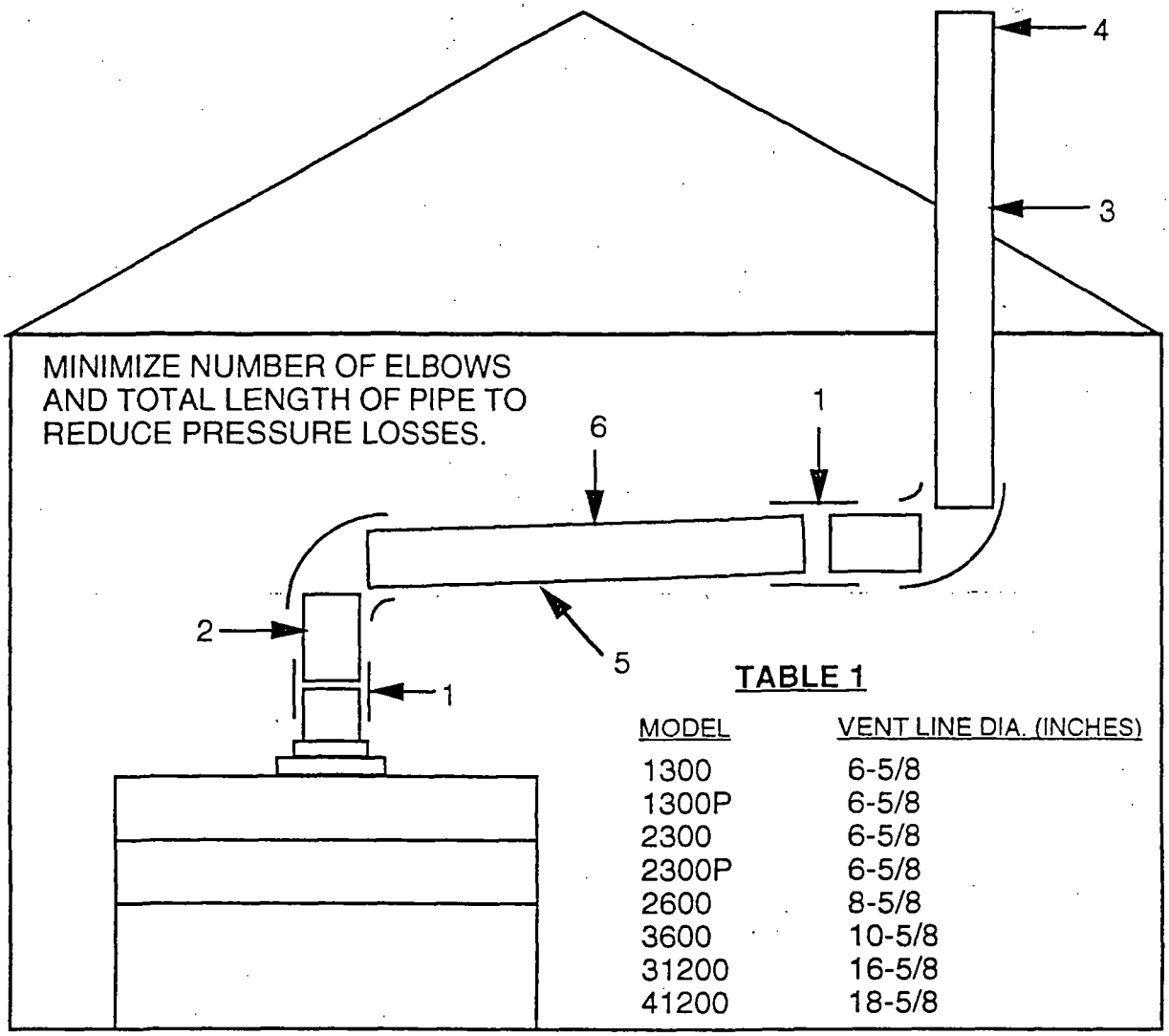

TABLE 1

MODEL	VENT LINE DIA. (INCHES)
1300	6-5/8
1300P	6-5/8
2300	6-5/8
2300P	6-5/8
2600	8-5/8
3600	10-5/8
31200	16-5/8
41200	18-5/8

NOTES:

1. RUBBER COUPLING WITH STAINLESS STEEL RING CLAMPS.
2. VENT LINE PIPE DIAMETER MUST BE EQUAL TO OR GREATER THAN THE AIR EXHAUST VENT DIAMETER ON THE AIR STRIPPER COVER.
3. FIRMLY SUPPORT PIPE AT ROOF PENETRATION.
4. FOR INTERMITTENT OPERATION, INSTALL WIRE MESH OF 1/4" (OR LARGER). FOR DRINKING WATER SUPPLY, INSTALL ELBOW WITH WIRE MESH.
5. ALLOW CLEARANCE FOR REMOVING SECTION OF VENT LINE FOR EASY ACCESS TO AERATION TRAYS.
6. PITCH VENT LINE TOWARD SHALLOW TRAY UNIT.
7. USE PIPING THAT HAS ADEQUATE STRENGTH (PRESSURE OR VACUUM) SPECIFICATIONS, AND THAT IS OF SUITABLE MATERIAL.

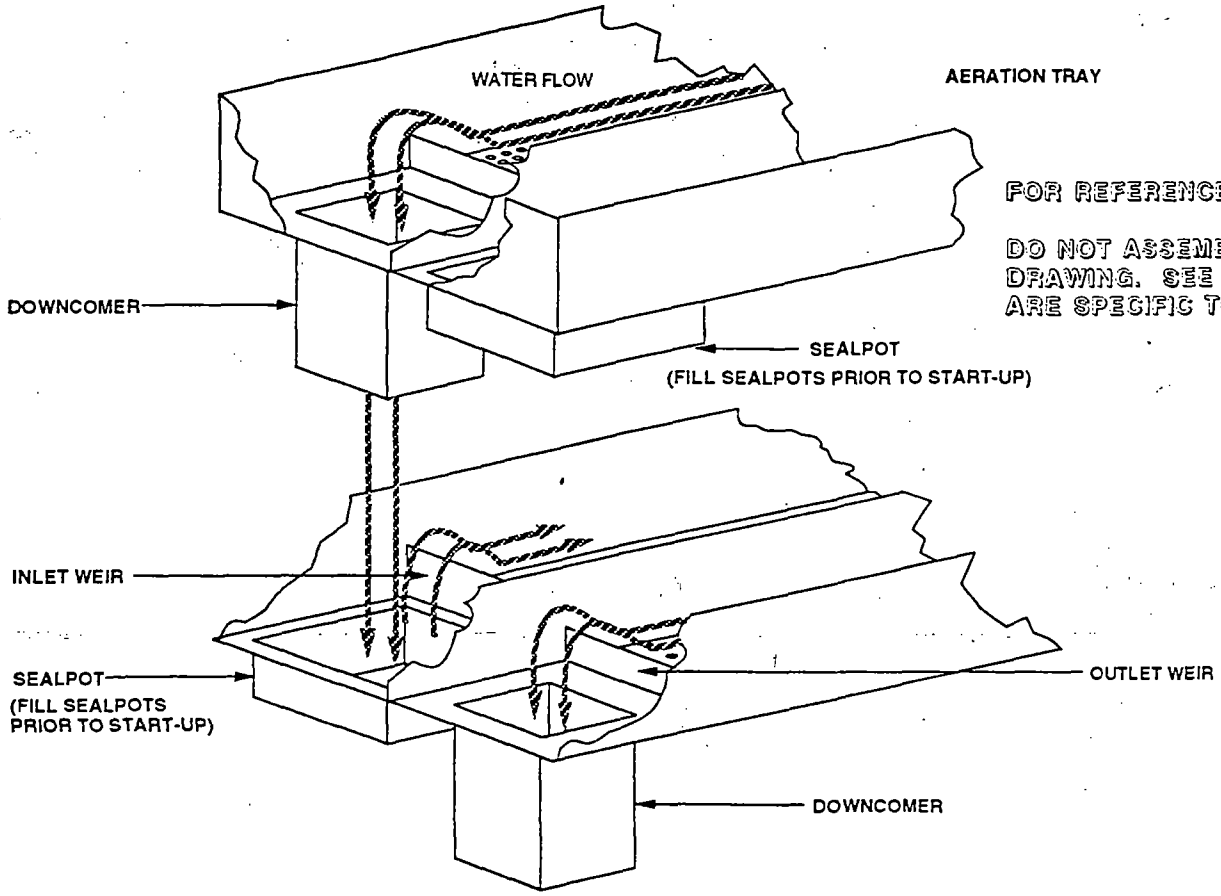

FOR REFERENCE ONLY !

DO NOT ASSEMBLE PER THIS DRAWING. SEE DRAWINGS THAT ARE SPECIFIC TO THIS UNIT.

CAUTION!

SEALPOT MUST BE FILLED WITH WATER TO CREATE WATER SEAL.

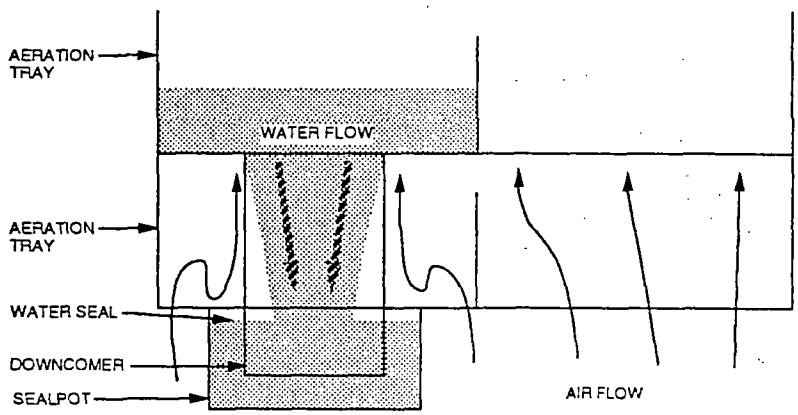

FILLED SEALPOT

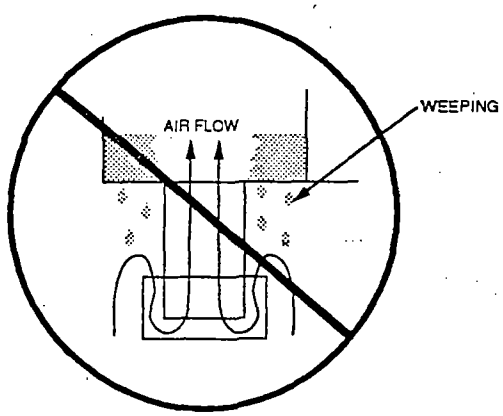

UNFILLED SEALPOT

1. EACH AERATION TRAY CONTAINS A SEALPOT. ALL SEALPOTS MUST BE FILLED WITH WATER TO FORM A WATER SEAL AROUND THE DOWNCOMERS.
2. IF SEALPOTS ARE NOT FILLED, AIR WILL TRAVEL UP THE DOWNCOMER AND PREVENT WATER FROM FLOWING DOWN THEM. THIS WILL CAUSE THE WATER TO WEEP THROUGH THE 3/16" AERATION HOLES ON THE BOTTOM OF EACH TRAY, RESULTING IN POOR REMOVAL EFFICIENCY.
3. THE SUMP TANK WATER LEVEL ACTS AS A WATER SEAL FOR THE BOTTOM TRAY DOWNCOMER. MAINTAIN AT LEAST 3" OF WATER IN THE SUMP TANK AT ALL TIMES.

EALPOTS CAN BE FILLED MANUALLY, OR BY FOLLOWING THE PROCEDURES LISTED IN THE PERATION AND MAINTENANCE MANUAL.

NORTH EAST ENVIRONMENTAL PRODUCTS, INC.
17 TECHNOLOGY DRIVE
WEST LEBANON, NH 03784
(603) 298-7061

TOLERANCES UNLESS OTHERWISE SPECIFIED ± 1 in.	DRAWING NAME: SEALPOTS		
	DRAWING #: 900-160-00061		
DRAWN: MS DATE: 11/19/92	CUSTOMER:		
REV: A 3/9/94	SCALE:	SIZE: A	SHEET: OF:

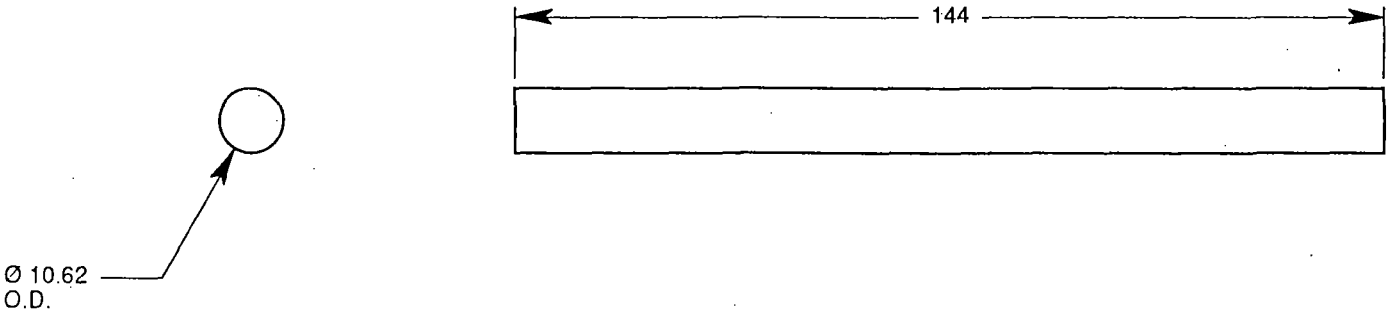

P/N 500-200-00850

NOTES

1 ALL DIMENSIONS ARE IN INCHES
2 DEBURR ALL EDGES
3 MATERIAL 304L SST 14G SHEETMETAL

NORTH EAST ENVIRONMENTAL PRODUCTS, INC.
17 TECHNOLOGY DRIVE
WEST LEBANON, NEW HAMPSHIRE 03784

TITLE

SST EXHAUST DUCT

SIZE	DWG NO.	SHEET	REV
A	4939 DUCT	1 OF 1	Ø

SCALE		DRAWN	DATE
NONE	DO NOT SCALE DRAWING	RC	2/17/97

AS-100 AIR STRIPPER	P/N 500-200-00860
B-100 BLOWER	P/N 500-200-00861
BM-100 BLOWER MOTOR	P/N 500-200-00862
PI-112 AIR PRESSURE GAUGE	P/N 500-200-00863
FSL-113 LOW AIR PRESSURE ALARM SWITCH	P/N 500-200-00864
LSH-111 HIGH WATER LEVEL ALARM SWITCH	P/N 500-200-00865

MATERIAL: SST SHEETMETAL, 304L

LETTERING: 1/4" HIGH, EMBOSSED OR STAMPED

DEBURR ALL SHARP EDGES

NORTH EAST ENVIRONMENTAL PRODUCTS, INC.
17 TECHNOLOGY DRIVE
WEST LEBANON, NEW HAMPSHIRE 03784

TITLE: EQUIPMENT & INSTRUMENT TAGS

SIZE	DWG NO.	SHEET	REV
A	4939 TAGS	1 OF 1	Ø

SCALE		DRAWN	DATE
1:1	DO NOT SCALE DRAWING	RC	2-17-97

North East
Environmental Products, Inc.
17 Technology Drive West Lebanon NH 03784
(603) 298-7061 Fax (603) 298-7063

SHALLOWTRAY LOW CONTAMINANT REMOVAL QUESTIONS

1. Have the trays been taken apart? Are they put back together as from our factory, i.e., nozzle over sealpot, downcomers from each tray underwater in the sealpot of the tray below?
2. What is the sump tank air pressure reading? Is it steady, slowly changing over time, or rapidly fluctuating?
3. What is the air flow rate through the stripper? How is it measured? Where is the sensor mounted?
4. What is the air intake and exhaust piping design (size of ducts, number of elbows, length of pipe run, GAC, heaters, other restrictions)?
5. Are sample ports installed on each tray to verify per-tray removal efficiency?
6. Is sump tank contaminated? Where are effluent samples effluent taken from?
7. Are sample ports purged for 30 seconds-1 minute before taking sample?
8. Are samples being taken, stored, and tested per approved methods?
9. Are seal pots on each tray full of water?
10. Does the sump tank have at least 4 inches of water at all times?
11. Is the water suction elbow in the tank pointing down and always underwater?
12. What is the inlet water temperature?
13. What else is in the water besides the contaminants in question?
14. Are there occasional slugs of free product, or much higher than normal contaminant concentrations that could sneak into the stripper?
15. Is inlet water supplied as a continuous stream (as from an electric pump), or is the flow pulsed (as from a pneumatic pump)?
16. Are there surfactants, detergents, greases, fats, etc. in the water that are causing foaming in the stripper?
17. Is there equipment near the blower intake that could be contaminating the air?
18. Has the air entering the blower been tested for abscence of VOCs?
19. How far away from each other are the air intake and air exhaust points? Is the air intake downwind or upwind from the exhaust? Is it possible for contaminated air to be sucked back into the stripper air intake?
20. Is the blower spinning in the correct direction (top of blower wheel spinning towards tank)? Watch wheel when it is almost stopped.
21. Is there air coming out of the discharge piping?
22. Is outlet piping siphoning all water out of the sump tank, until it sucks air from tank?
23. What is the outlet plumbing design (gravity discharge, pumped discharge, uphill, downhill, other equipment in-line, size of piping, etc.)?
24. What do the bubbles look like in each tray? Install temporary windows to see.
25. Are the undersides of the trays free of drips and drizzles?
26. Are tray holes at all closed up or plugged? Is there any scaling or fouling on the trays?
27. Is the system level?
28. When shutting system down, is inlet water shut off, blower allowed to operate for an additional 5 minutes, then blower shut off?

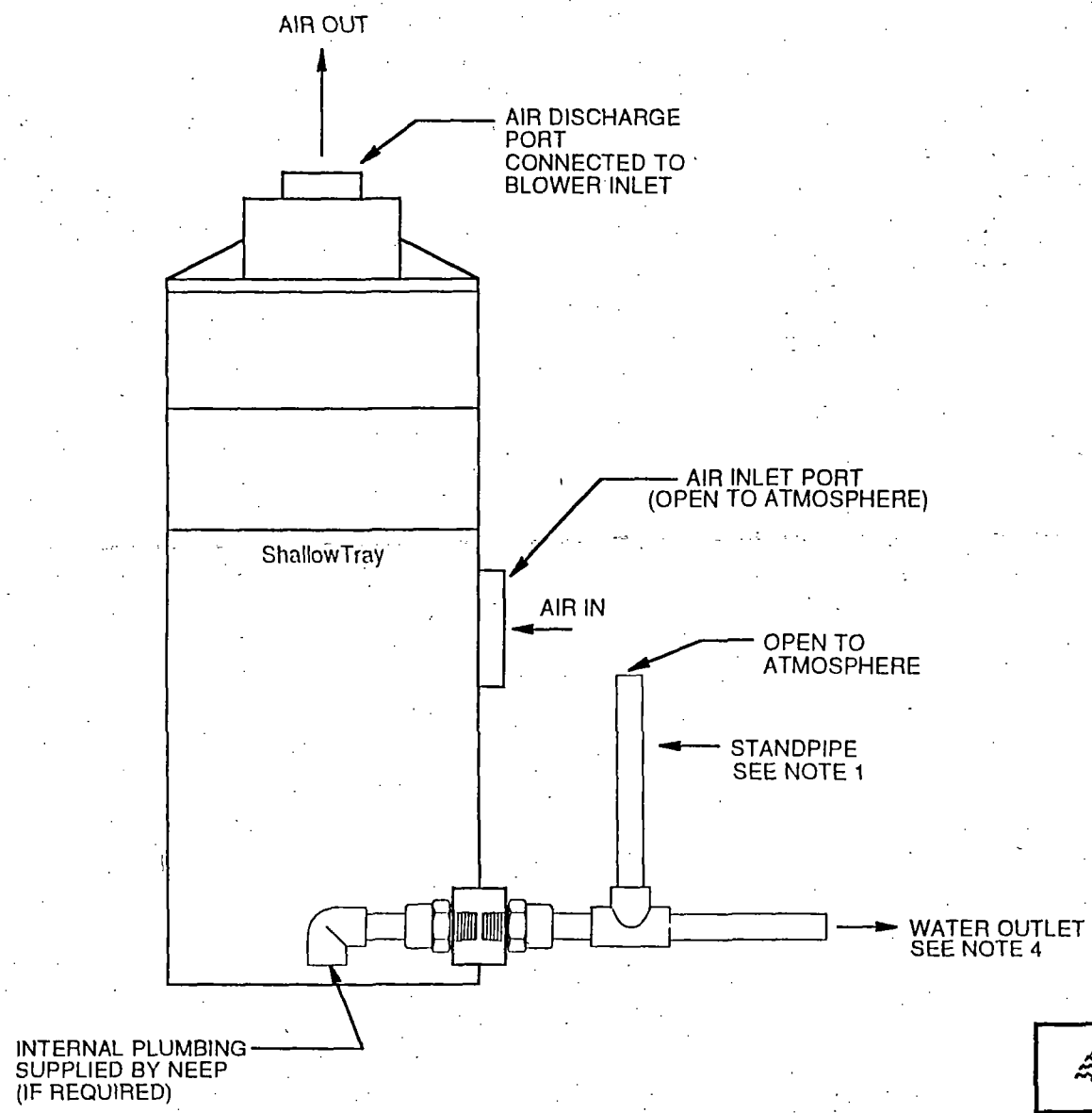

NOTES

1. HEIGHT TO TOP OF STANDPIPE SHOULD BE 1" HIGHER THAN LOWEST POINT ON AIR INLET PORT.
2. DO NOT USE THIS SETUP IF PUMPING OUT OF ShallowTray.
3. DISHARGE PIPING SHALL BE GREATER THAN OR SAME SIZE AS WATER DISCHARGE PORT.
4. PIPING RUN MUST PITCH AWAY FROM STRIPPER.

DRAWING FOR REFERENCE ONLY
DO NOT ASSEMBLY PER THIS DRAWING.
SEE DRAWINGS THAT ARE SPECIFIC TO THIS UNIT.

NORTH EAST ENVIRONMENTAL PRODUCTS, INC.
17 TECHNOLOGY DRIVE
WEST LEBANON, NEW HAMPSHIRE 03784

TITLE

RECOMMENDED GRAVITY DISCHARGE SETUP FOR INDUCED DRAFT SYSTEMS

SIZE	DWG NO	SHEET	REV
A	900-140-00003	1 OF 1	Ø

SCALE		DRAWN	DATE
NONE	DO NOT SCALE DRAWING	RC	7-7-95

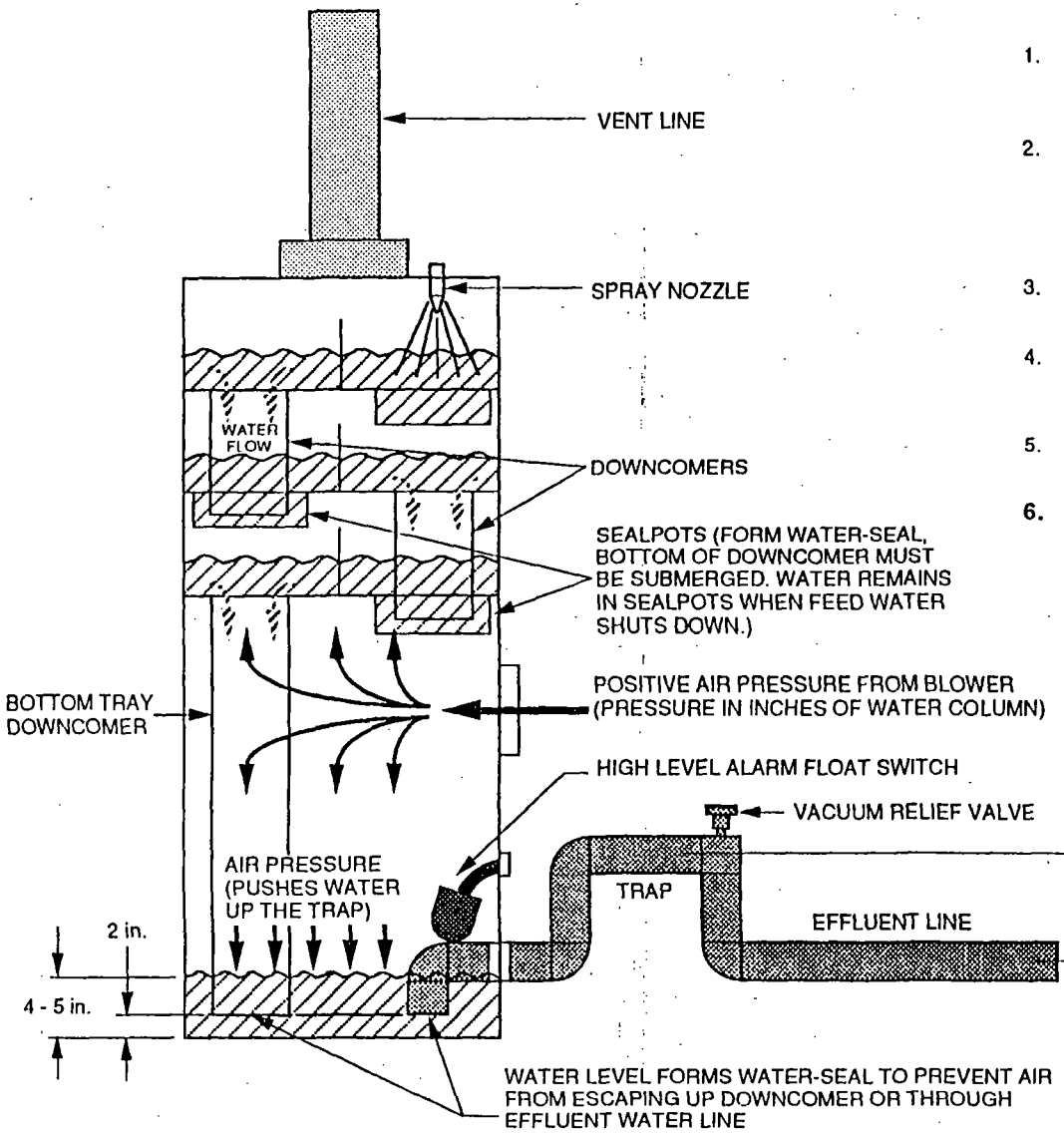

SIDE VIEW

DO NOT USE THIS TRAP WHEN PUMPING OUT OF ShallowTray OR WITH INDUCED DRAFT SYSTEMS

GRAVITY DISCHARGE TRAP SET-UP (SEE NOTE 6)

1. VERTICAL TRAP HEIGHT SHOULD BE SET SO THAT THE SYSTEM MAINTAINS A SUMP TANK WATER LEVEL OF 4-5 INCHES (FROM THE BOTTOM OF THE SUMP TANK) DURING NORMAL OPERATION.
2. THE 4-5 INCH WATER LEVEL ALLOWS THE HIGH LEVEL ALARM SWITCH TO RESET AND ALSO FORMS A WATER SEAL AROUND THE BOTTOM TRAY DOWNCOMER AND THE EFFLUENT WATER LINE. THIS PREVENTS AIR FROM ESCAPING THROUGH THE EFFLUENT WATER LINE AND BOTTOM TRAY DOWNCOMER.
3. THE VACUUM RELIEF VALVE PREVENTS THE WATER FROM SIPHONING OUT THE EFFLUENT WATER LINE.
4. IF THE SUMP TANK WATER IS DEEPER THAN 4-5 INCHES WHEN THE STRIPPER IS IN OPERATION, THEN EITHER THE LINE SIZE IS TOO SMALL OR THERE IS SOME TYPE OF RESTRICTION IN THE LINE.
5. IF THE EFFLUENT LINE BECOMES FOULED, IT WILL REDUCE THE DIAMETER OF THE LINE AND CAUSE THE WATER LEVEL TO RISE.
6. **A TRAP IS NOT NEEDED IF THERE IS A DISCHARGE PUMP.**

FOR REFERENCE ONLY !

DO NOT ASSEMBLE PER THIS DRAWING. SEE DRAWINGS THAT ARE SPECIFIC TO THIS UNIT.

SET HEIGHT OF INVERTED U-TRAP TO MAINTAIN 4-5 in. WATER LEVEL IN SUMP TANK DURING STRIPPER OPERATION

NORTH EAST ENVIRONMENTAL PRODUCTS, INC.
17 TECHNOLOGY DRIVE
WEST LEBANON, NH 03784
(603) 298-7061

TOLERANCES UNLESS OTHERWISE SPECIFIED ± 1 In.	DRAWING NAME: GRAVITY DISCHARGE TRAP HEIGHT		
	DRAWING #: 900-140-00001		
DRAWN: MS	CUSTOMER:		
DATE: 11/8/93	SCALE:	SIZE: A	SHEET : OF :

Section 7: Component Information

Intrinsically Safe Switch Isolator

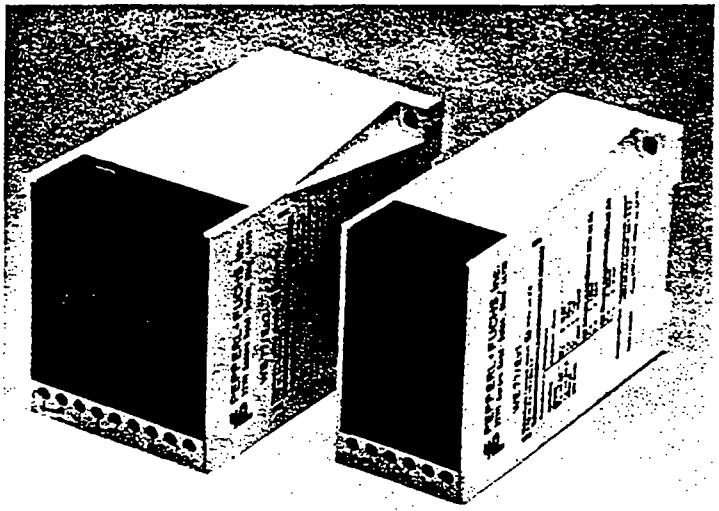

2 Models

WE77/Ex1-UL

Single Channel, SPDT Relay Output
Housing Style A

WE77/Ex2-UL

Dual Channel, SPDT Relay Output
Housing Style B

Description

This device is a transformer isolated intrinsic safety barrier with a built-in amplifier that isolates and transfers discrete signals from a potentially explosive area to a safe area. The following discrete inputs may be used:

- Dry Contact Closures
- P+F NAMUR Output Proximity Sensors
- Open Collector (Potential Free) Transistors

" may also be used to act as an amplifier/interface ɹr discrete signals in non-explosive applications.

Operation

The output changes state when the input signal changes state depending upon the mode of operation selected (see functional diagram).

Approval

UL LISTED

General Specifications

HOUSING STYLES	A & B (See Dimension Page)
OPERATING TEMP. RANGE	-13°F to +140°F
MAXIMUM WIRE SIZE	(2) #16 AWG
HOUSING MATERIAL	NORYL SE O
'VEIGHT	
WE77/Ex1-UL	13.5 oz.
WE77/Ex2-UL	14.5 oz.
APPROVED FOR	Class I, II, III; Division 1 and 2; Groups A-G Hazardous Locations

Technical Data

SUPPLY VOLTAGE	120VAC,-15%+10%/45-60Hz*
The supply is isolated from the input and output	
POWER CONSUMPTION	approximately 3.5VA
INPUT	Intrinsically Safe follows FM Approval Standard No. 3610 and all European Standards
The input is isolated from the output and supply	
OPEN CIRCUIT VOLTAGE	approximately 8VDC
SHORT CIRCUIT CURRENT	approximately 8mA
SWITCHING POINT (S)	1.2mA≤S≤2.1mA (1.7mA typical)
RELAY OUTPUT	SPDT
The output is isolated from the supply and input	
AC RATING	Max. Voltage ≤240VAC Max. Current ≤4A Max. Power ≤500VA/cos ϕ ≥.75
DC RATING	110V/0.2A 60V/0.5A 24V/1.0A
MAX. SWITCHING FREQUENCY	10Hz
RESPONSE TIME	Energize approximately 20mS De-energize approximately 10mS

Other voltages available upon request.

Operation

Mode Condition

Standard pre-set A-mode: Output energizes with input resistance low.

R-mode option: Output energizes with input resistance high.

RS-mode option: R-mode with lead breakage monitoring of the input.

Lead Breakage Monitor

Additional circuitry monitors the input current.

Output de-energizes if current falls below 150μA.

Changing the Mode of Operation

	Single Channel	Dual Channel
Mode of Operation	**Jumper at Terminals**	**Jumper at Terminals**
A-mode	3 and 4	2 and 3, 7 and 8
R-mode	4 and 5	3 and 4, 6 and 7
RS-mode	no jumper	no jumper

Functional Diagram

A, R and RS mode
(comparison between NAMUR inductive,
NAMUR capacitive sensor and contact closure).

INPUT			Mode of Operation	Output	LED
NAMUR Inductive Sensor	NAMUR Capacitive Sensor	Contact Closure			
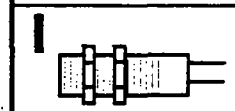		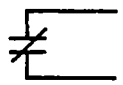	A	*ON*	*ON*
		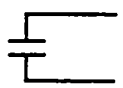		OFF	OFF
		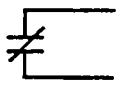	R	OFF	OFF
	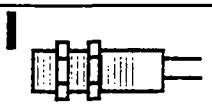	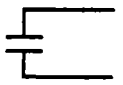		*ON*	*ON*
	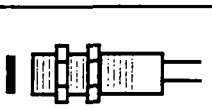	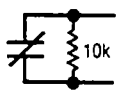	RS regular operation	OFF	OFF
		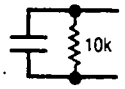		*ON*	*ON*
		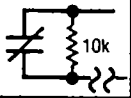	RS lead breakage	OFF	OFF
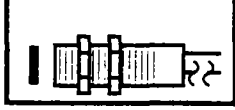		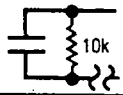		OFF	OFF

When lead breakage monitoring of a contact closure is desired, the resistor shown **must** be connected at the contact closure for proper results.

WARRICK CONTROLS

Installation

INSTALLATION OF WARRICK SERIES 27 — INTRINSICALLY SAFE SENSING CIRCUIT

This bulletin should be used by experienced personnel as a guide to the installation of the Series 27. Selection or installation of equipment should always be accomplished by competent technical assistance. We encourage you to contact Warrick or its local representative if further information is required.

IMPORTANT: BEFORE PROCEEDING TO INSTALL AND WIRE THE CONTROL, READ AND THOROUGHLY UNDERSTAND THESE INSTRUCTIONS.

When installed according to these instructions, this device provides an intrinsically safe output for interface into Class I and II, Division I, Groups A, B, C, D, E, F, and G Hazardous locations. Electrical equipment connected to associated apparatus should not exceed maximum voltage marked on product.

LOCATION: The control must be situated in a non-hazardous area where an explosive atmosphere will not exist at any time unless it is mounted in a suitable U.L. approved explosion-proof enclosure with suitable U.L. approved explosion-proof seals.

WIRING:

1. Intrinsically safe wiring must be kept separate from non-intrinsically safe wiring.
2. Intrinsically safe and non-intrinsically safe wiring may occupy the same enclosure or raceway if they are at least 2 inches (50mm) apart and separately tied down. Inside panels, field wiring terminals for intrinsically safe circuits must be separated by at least 2 inches (50mm) from non-intrinsically safe terminals.
3. Wire the control device(s) to the Series 27 relay as shown in the specific application wiring diagram on reverse side. A separate rigid metallic conduit should be used to enclose the conductors of the intrinsically safe control circuit.
4. An approved seal should be used at the point where the intrinsically safe control circuit wiring enters the hazardous area.

For intrinsically safe output wiring use #14 or #16 AWG type MTW or THHN wire. By using these wire types in conjunction with the following distance recommendations, you will not exceed the maximum capacitance for field wiring.

Use the following chart as a guide for maximum wire runs for differential level service (3 wire) field wiring.

Model	Max. Sensitivity (K OHMS)	Distance (Ft.)
27XXDO	3	4,000
27XXEO	10	900
27XXGO	100	75

GROUNDING: Both mounting tabs of the Series 27 provide an electrical connection for earth grounding between the control's internal solid state circuitry and the enclosure chassis. To insure proper grounding, use only metal screws and lock washers when mounting this control.

One of the two ground terminals provided on the intrinsically safe output terminal strip must be connected as reference to the same conductive media presented to terminals "H" and "L" (see applicable wiring diagram on reverse side).

Terminal G1 on the supply line/load side terminal strip is a redundant system ground terminal and should be connected to the earth ground buss of the control's AC supply line feeder.

NOTE:

1. Intrinsically safe terminals can be connected to any non-energy generating or storing switch device such as a pushbutton, limit or float type switch or any Warrick electrode and fitting assembly.
2. To prevent electrical shock from supply line/load side powered connections, the Series 27 should be mounted in a tool accessible enclosure of proper NEMA rated integrity.
3. For additional guidance on "Hazardous Location Installations" and "Intrinsically Safe Devices", consult ANSI/ISA standard RP 12-6 or NEC articles 500 through 516.

MODEL NUMBER DESIGNATION:

SERIES 27 X X X X

- **Enclosure:** 0 - open (no enclosure); 1 - NEMA 1 Enclosure
- **Sensitivity** (ohms): D-3,000; E-10,000; G-100,000
- **Primary AC Supply:** 1 - 120 VAC; 2 - 240 VAC (50/60 Hz)
- **Mode of Operation:** A - Direct; B -Inverse
- **Control Series**

SPECIFICATIONS

CONTACT DESIGN: SPDT (1 form C), one normally open (N.O.) and one normally closed (N.C.)
CONTACT RATING: 8 Amps - 250 VAC, 8 Amps - 30 VDC. Resistive.
CONTACT LIFE: Electrical @ rated load = 100,000 cycles minimum. Mechanical = 10,000,000 cycles.
ELECTRONICS MODULE: Solid state components epoxy encapsulated in a black nylon shell.
SENSITIVITY RANGE: 0-100,000 Ohms maximum specific resistance.
TEMPERATURE RANGE: (minus) -40 deg F. to (plus) + 150 deg F.
PRIMARY AC SUPPLY LINE: A) Voltage — (120, and 240 VAC) (plus) + 10%, (minus) — 10%. B) Frequency — 50/60 Hertz. C) Power — (Relay energized) 1.7 VA.
SECONDARY CIRCUIT: Nominal 11 Volts, AC, RMS, Current: 2.3 Milliampere, RMS.
TERMINALS: Size 6 pan head screws with captivated wire clamping plate.

WARRICK CONTROLS

INSTALLATION OF WARRICK SERIES 27 — INTRINSICALLY SAFE SENSING CIRCUIT

SINGLE LEVEL SERVICE — CONDUCTANCE ACTUATED:

Connect incoming AC (120, 240 VAC) supply to AC terminals:
Incoming earth ground to terminal G1.
Install metallic jumper between terminals H-L.
Connect terminal L to the electrode.
Terminal G must be grounded to the tank if metallic. When the tank is non-metallic, terminal G must be connected to an additional electrode of length equal to the longest electrode.
NOTE: Jumper must be installed as shown to insure proper operation. Wire contacts (C-NO) normally open and (C-NC) *normally closed into load circuit as required.*

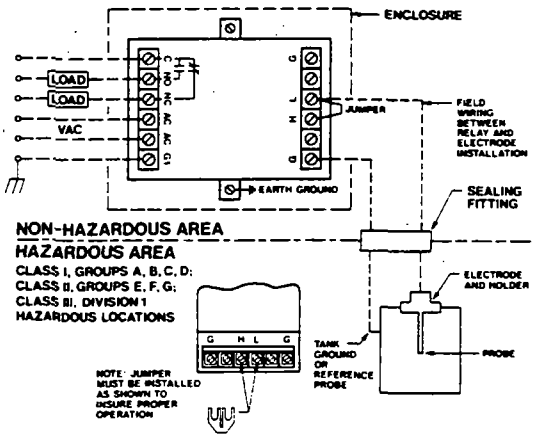

DIFFERENTIAL LEVEL SERVICE — CONDUCTANCE ACTUATED:

Connect incoming AC (120, 240 VAC) supply to AC terminals:
Incoming earth ground to terminal G1.
Connect terminal H to high electrode and terminal L to low electrode.
Terminal G must be grounded to the tank if metallic. When the tank is non-metallic, terminal G must be connected on an additional electrode of length equal to the longest electrode.
Wire contacts (C-NO) normally open and (C-NC) normally *closed into load circuit as required.*

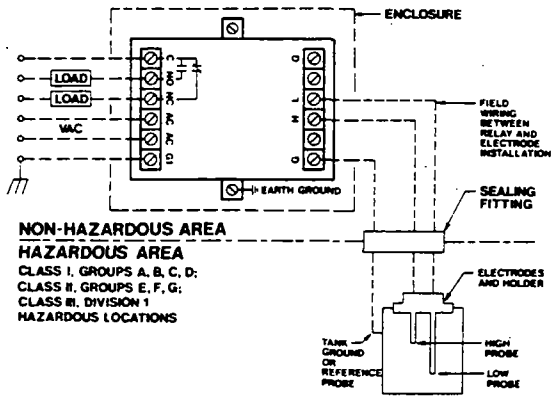

SINGLE INPUT (NON-LATCHING) - PILOT CONTACT ACTUATED:

Connect incoming AC (120, 240 VAC) supply to AC terminals:
Incoming earth ground to terminal G1.
Install metallic jumper between terminals H-L.
Wire contacts (C-NO) normally open and (C-NC) normally closed into load circuits as required.
Connect the pilot contact to terminals G-L.
NOTE: Jumper must be installed as shown to insure proper operation.

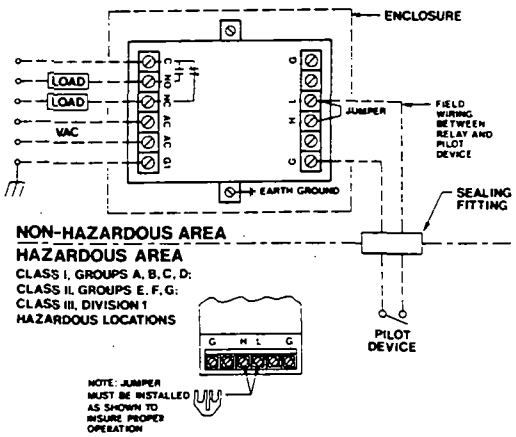

DUAL INPUT (LATCHING) - PILOT CONTACT ACTUATED:

Connect incoming AC (120, 240 VAC) supply to AC terminals:
Incoming earth ground to terminal G1.
Wire contacts (C-NO) normally open and (C-NC) normally closed into load circuits as required.
Connect the latch pilot contact to terminals G-H and the unlatch pilot contact to terminals G-L.

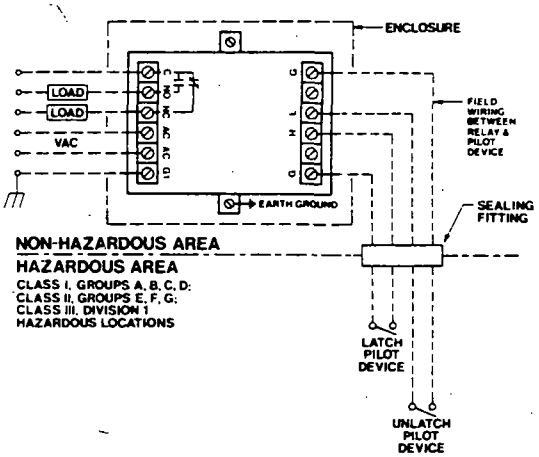

HR

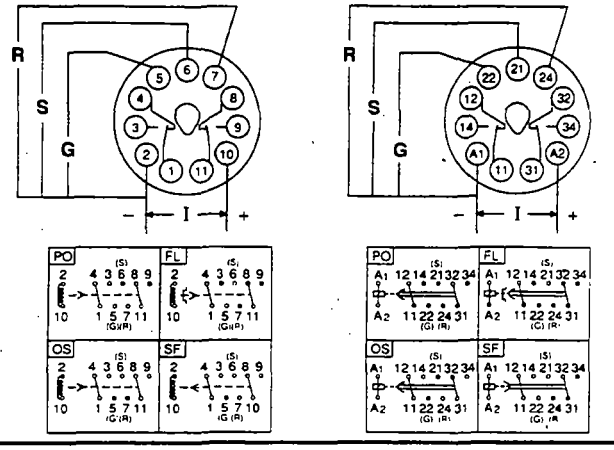

- CONTACT INPUTS (R, S, G)
  FOR OPTIMUM RELIABILITY USE EXTERNAL SWITCHES THAT ARE DESIGNED FOR LOW LEVEL SWITCHING. (700-HC54 – –)
- ENTRÉES CONTACTS (R, S, G)
  POUR UNE FIABILITE MAXIMUM, UTILISEZ DES COMMUTATEURS EXTERNES PRÉVUS POUR UN BAS NIVEAU DE COMMUTATION. (700-HC54 – –)
- KONTAKT-EINGÄNGE (R, S, G)
  FÜR OPTIMALE ZUVERLÄSSIGKEIT WIRD DIE BENUTZUNG VON EXTERNEN SCHALTERN, DIE FÜR SCHWACHSTROMSCHALTUNGEN KONSTRUIERT WURDEN, EMPFOHLEN. (700-HC54 – –)
- ENTRADAS DE CONTACTO (R, S, G)
  PARA UNA OPTIMA CONFIABILIDAD USE CONMUTADORES EXTERNOS QUE ESTEN DISEÑADOS PARA UN BAJO NIVEL DE CONMUTACION. (700-HC54 – –)
- ENTRADAS DE CONTATO (R, S, G)
  PARA PERFEITA CONFIABILIDADE USE TOMADAS EXTERNAS QUE SÃO CONCEBIDAS PARA BAIXAS ALTERAÇÕES (700-HC54 – –)

HRM

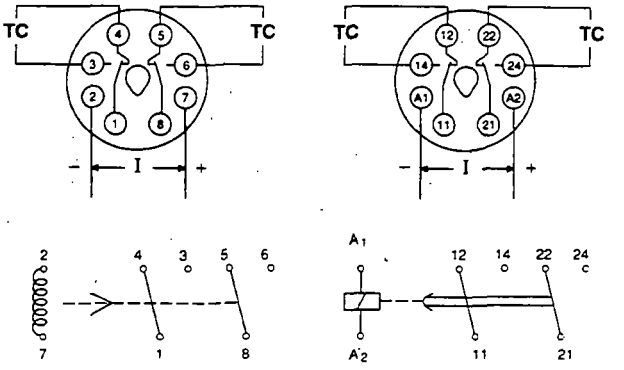

- SOLID STATE SIGNAL INPUTS (R, S, G)
  TRANSISTOR OPEN COLLECTOR: ①
  PROXIMITY SWITCH, PHOTOELECTRIC SWITCH, ETC.: ②
- ENTRÉES DE SIGNAUX À SEMI-CONDUCTEURS (R, S, G)
  COLLECTEUR OUVERT DU TRANSISTOR: ①
  COMMUTATEUR DE PROXIMITÉ, COMMUTATEUR PHOTOÉLECTRIQUE ETC.: ②
- FESTKÖRPER-SIGNAL-EINGÄNGE (R, S, G)
  OFFENER TRANSISTORKOLLEKTOR: ①
  NÄHERUNGSSCHALTER, PHOTOELEKTRISCHER SCHALTER, ETC.: ②
- ENTRADAS DE SEÑAL TRANSISTORIZADAS (R, S, G)
  COLECTOR ABIERTO DEL TRANSISTOR: ①
  CONMUTADOR DE PROXIMIDAD, CONMUTADOR FOTOELECTRICO, ETC.: ②
- ENTRADAS DE SINAL TRANSISTORIZADOS (R, S, G)
  COLETA ABERTO DE TRANSISTOR: ①
  TOMADA DE PROXIMIDADE, TOMADA FOTOELÉTRICA, ETC.: ②

HRC

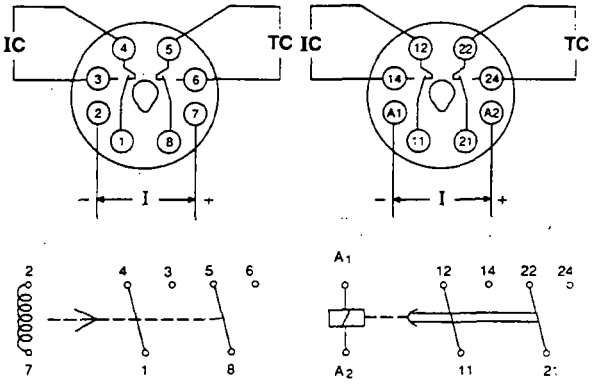

① V_{CEO} = 20 V min $V_{CE(S)}$ = 1 Vmax,
I_C = 50mA min, I_{CBO} = 0.5uA max.

②

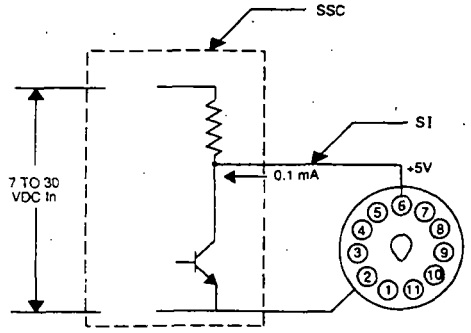

WIRING DIAGRAM KEY / CODE SCHÉMAS ÉLECTRIQUES / SCHALTPLANSCHLÜSSEL / CODIGO DE LOS DIAGRAMAS DEL CABLEADO / CÓDIGO DIAGRAMA DE CABOS

R = RESET SIGNAL / SIGNAL DE RÉARMEMENT / RÜCKSETZSIGNAL / SEÑAL DE REPOSICION / SINAL DE REARMAMENTO

S = START SIGNAL / SIGNAL DE DEMARRAGE / STARTSIGNAL / SEÑAL DE ARRANQUE / SINAL DE INÍCIO

I = GATE SIGNAL (PAUSE) / SIGNAL GATE (PAUSE) / GATE SIGNAL (PAUSE) / SEÑAL DE COMPUERTA (PAUSA) / SINAL DE COMPORTA (PAUSA)

I = INPUT / ENTRÉE / EINGANG / ENTRADA / ENTRADA

IC = INSTANTANEOUS CONTACTS / CONTACTS INSTANTANÉS / SOFORT ANSPRECHENDE KONTAKTE / CONTACTOS INSTANTANEOS / CONTACTOS INSTANTÂNEOS

TC = TIMED CONTACTS / CONTACTS TEMPORISÉS / ZEITGESTEUERTE KONTAKTE / CONTACTOS TEMPORIZADOS / CONTATOS TEMPORIZADOS

SSC = SOLID STATE CIRCUIT (PROXIMITY SWITCH, PHOTOELECTRIC SWITCH, ETC.) / CIRCUIT TRANSISTORISE (COMMUTATEUR PHOTOÉLECTRIQUE, ETC.) / FESTKÖRPERSCHALTKREIS (NÄHERUNGSSCHALTER, PHOTOELEKTRISCHER SCHALTER, ETC.) / CIRCUITO TRANSISTORIZADO (CONMUTADOR DE PROXIMIDAD, CONMUTADOR FOTOELECTRICO, ETC.) / CIRCUITO TRANSISTORIZADO (TOMADA DE PROXIMIDADE, TOMADA FOTOELÉTRICA, ETC.)

SI = START INPUT (TIMER STARTS AT LOW LEVEL OF THIS SIGNAL) / ENTRÉE DÉMARRAGE (LE TEMPORISATEUR DEMARRE A BAS NIVEAU DE CE SIGNAL) / STARTEINGANG (ZEITRELAIS BEGINNT BEI KLEINSIGNAL) / ENTRADA DE ARRANQUE (EL TEMPORIZADOR ARRANCA A UN BAJO NIVEL DE ESTA SEÑAL) / ENTRADA DE INIZIO (O TEMPORIZADOR INICIA À BAIXO NÍVEL NO SINAL)

TIMING CHARTS | **TABLEAUX DE TEMPORISATION** | **ZEITREGELUNGS-BEREICH-TABELLEN** | **GRAFICAS DE TEMPORIZACION** | **GRAFICOS DE TEMPORIZAÇÃO**

TYPE HR:

PO

(SIGNAL) ON DELAY:
SIGNAL DE DÉBUT DE TEMPORISATION:
(SIGNAL) EINSCHALTVERZÖGERUNG:
RETARDO AL CONECTARSE (SEÑAL):
(SINAL) COM RETARDAMENTO:

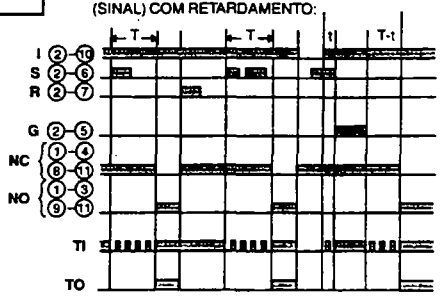

T>t

FL

FLICKER (REPEAT CYCLE):
CLIGNOTEMENT (RÉPETER CYCLE):
FLACKER (WIEDERHOLZYKLUS):
CENTELLEO (REPETIR EL CICLO):
PISCA-PISCA (REPETIR CICLO):

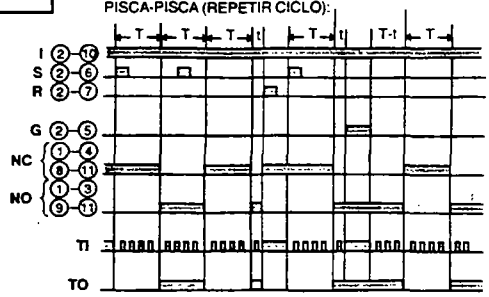

OS

ONE SHOT:
UN COUP:
EINZELSCHRITT:
ETAPA UNICA:
ETAPA UNICA:

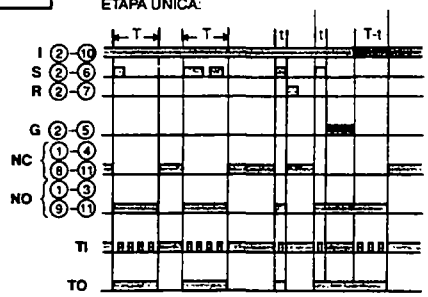

T>t

SF

(SIGNAL) OFF DELAY:
SIGNAL D'ARRÊT DE TEMPORISATION:
(SIGNAL) AUSSCHALTVERZÖGERUNG:
RETARDO AL DESCONECTARSE (SEÑAL):
(SINAL) SEM RETARDAMENTO:

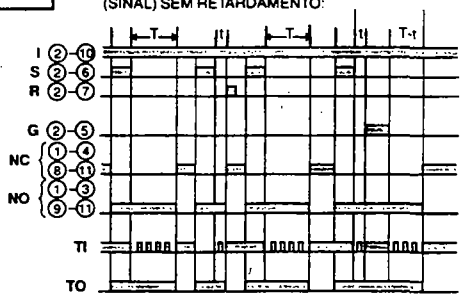

TYPE HRM:

ON DELAY
DÉBUT TEMPORISATION
EINSCHALTVERZÖGERUNG
DE RETARDO AL CONECTARSE
COM RETARDAMENTO

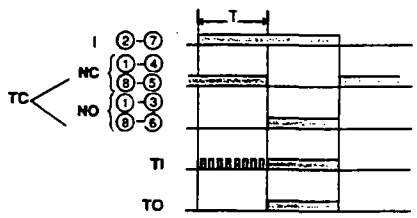

TYPE HRC:

ON DELAY
DÉBUT TEMPORISATION
EINSCHALTVERZÖGERUNG
DE RETARDO AL CONECTARSE
COM RETARDAMENTO

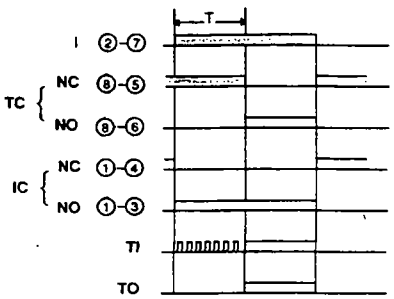

TIMING CHART KEY / CODE TABLEAU DE TEMPORISATION / SCHLÜSSEL FÜR ZEITREGELUNGSTABELLE / CODIGO DEL GRAFICO DE TEMPORIZACION / CÓDIGO DA GRÁFICO DE TEMPORIZAÇÃO

I =
INPUT
ENTRÉE
EINGANG
ENTRADA
ENTRADA

S =
START SIGNAL
SIGNAL DE DÉMARRAGE
STARTSIGNAL
SEÑAL DE ARRANQUE
SINAL DE INÍCIO

R =
RESET SIGNAL
SIGNAL DE RÉARMEMENT
RÜCKSETZSIGNAL
SEÑAL DE REPOSICION
SINAL DE REARMAMENTO

G =
GATE SIGNAL (PAUSE)
SIGNAL GATE (PAUSE)
GATE SIGNAL (PAUSE)
SEÑAL DE COMPUERTA (PAUSA)
SINAL DE COMPORTA (PAUSA)

NC =
OUTPUT (NC)
SORTIE (NF)
AUSGANG (RUHEKONTAKT)
SALIDA (NC)
SAÍDA (NC)

NO =
OUTPUT (NO)
SORTIE (NO)
AUSGANG (ARBEITSKONTAKT)
SALIDA (NA)
SAÍDA (NO)

TI =
POWER / TIMING INDICATOR
INDICATEUR DE PUISSANCE/TEMPORISATION
STROM / ZEITREGELUNGS-ANZEIGE
INDICADOR DE TEMPORIZACION/ENERGIA
INDICADOR DE ENERGIA/TEMPORIZAÇÃO

TO =
TIMED OUT INDICATOR
INDICATEUR DE DÉPASSEMENT
ZEITABLAUF-ANZEIGE
INDICADOR DE TERMINACION DEL PERIODO DE TEMPORIZACION
INDICADOR DO TÉRMINO DA TEMPORIZAÇÃO

TC =
TIMED CONTACTS
CONTACTS TEMPORISÉS
ZEITGESTEUERTE KONTAKTE
CONTACTOS TEMPORIZADOS
CONTATOS TEMPORIZADOS

IC =
INSTANTANEOUS CONTACTS
CONTACTS INSTANTANÉS
SOFORT ANSPRECHENDE KONTAKTE
CONTACTOS INSTANTANEOS
CONTACTOS INSTANTÂNEOS

40063-057-01 (B)
Printed in Japan

ALLEN-BRADLEY
A ROCKWELL INTERNATIONAL COMPANY

Installation Instructions

sprecher+schuh

Overload Relays - Series CT3

Installation Precautions

- Be sure overload relay is properly rated for the load. (See chart at right.)
- Use wire sizes in accordance with code and rating label.
- Check that terminations are properly torqued in accordance with label.
- Insure that overload relay has not been opened or tampered with in any way.
- Be sure that overload is protected by properly sized backup fuse in accordance with label.
- Use the function selector "TEST" position for checking circuitry and operation.
- Before energizing motor be sure overload relay is adjusted properly in accordance with instructions below.

Overload Relay Wiring Diagram

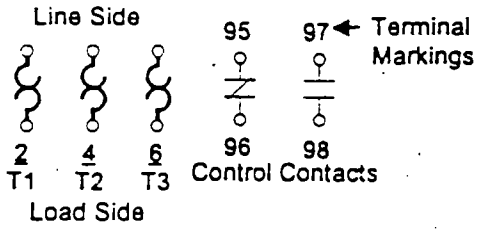

Setting Overload Relay

For motors with a service factor equal to or greater than 1.15, set dial at motor nameplate full load current. For motors with a service factor below 1.15 or a temperature rise greater than 40° C, the current setting should be adjusted lower. For example, set overload to .9 times full load current for 1.0 service factor (or 50° C rise) motors.

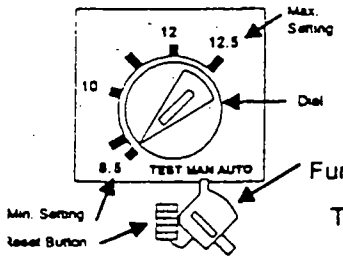

- Caution -
Do not use "AUTO" position if automatic restarting of equipment could be hazardous to personnel

Function Selector Settings:

TEST - Pressing reset button simulates tripping of overload relay.

MAN - After trip, overload relay must be manually reset by pressing reset button after cool down period.

AUTO - After trip, overload relay will automatically reset after cool down

Overload Relay Ratings

Catalog Number	Setting Range (Amperes)
CT3-0.16	0.10-0.16
CT3-0.24	0.15-0.24
CT3-0.38	0.24-0.38
CT3-0.62	0.38-0.62
CT3-1.0	0 62-1.0
CT3-1.6	1.0-1.6
CT3-2.5	1.6-2.5
CT3-4.0	2.5-4.0
CT3-6.0	3.8-6.0
CT3-9.5	6.0-9.5
CT3-12.5	8.5-12.5
CT3-17.5	12.0-17.5
CT3-23	16.0-23.0
CT3-32	23.0-32.0
CT3-42-32	25.0-32.0
CT3-42-42	32.0-42.0
CT3-52	40.0-52.0
CT3-63	52.0-63.0
CT3-72.5	58.0-72.5

The information contained herein does not include all details or variations in equipment, nor does it provide for every possible contingency to be met in connection with installation, operation, or maintenance. Should further information be desired, or should particular problems or questions arise which are not covered sufficiently for the purchasers purpose, the matter should be referred to the nearest Sprecher + Schuh office shown at right.

Sprecher + Schuh Regional Offices:

- Port Chester, NY Tel: (914) 937-0400
- Brookfield, WI Tel: (414) 785-9960
- Houston, TX Tel: (713) 847-2000
- Temecula, CA Tel: (714) 699-5091

INSTALLATION

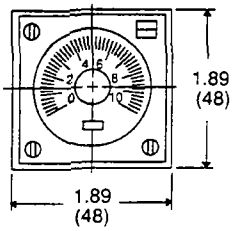

INSTALLATION

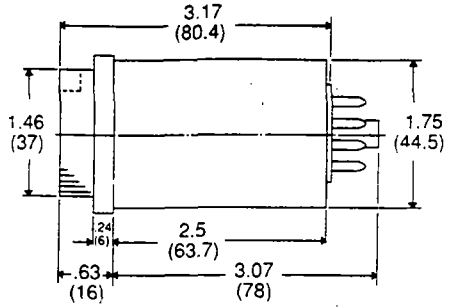

MONTAGE

INSTALACION

PANEL CUTOUT
DÉCOUPE DU PANNEAU
SCHALTTAFEL-AUSSCHNITT
CORTE DEL PANEL
CORTE DE PAINEL

FLUSH MOUNT WITH ADAPTER
MONTAGE ENCASTRÉ AVEC ADAPTATEUR
VERSENKTER EINBAU MITTELS ADAPTER
MONTAJE AL RAS CON ADAPTADOR
MONTAGIM NIVELADA COM ADAPTADOR

INSTALAÇÃO

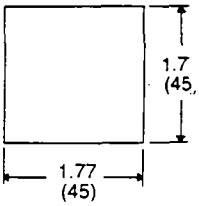

WARNING:
CAUTION:

- To prevent electrical shock, disconnect from power source before installing or servicing.
- Do not remove timer from housing. This will invalidate product warranty.
- Remove power before changing timing range, unit or mode selection.
- The 700-HR timer utilizes a transformerless power supply. Do not touch the input terminals when power is applied.
- External input devices used to control the timer should be equipped with an isolation transformer and an ungrounded output.
- When 2 or more timers are controlled by the same input contact or transistor, connect the #2 terminals of the timers together.
- Recommendations for external input signal lines:
  - Use shielded wire.
  - Keep wire as short as possible.
  - Separate input signal wires from power supply for the timer and from other voltage or power lines.

AVERTISSEMENT:
ATTENTION:

- Préalablement à l'installation et aux opérations de service, couper l'alimentation secteur pour empêcher tous chocs électriques.
- Ne pas retirer le temporisateur de son compartiment sous peine d'annuler la garantie.
- Couper le courant avant de changer la gamme de temporisation, la sélection de l'unité ou le mode.
- Le temporisateur 700-HR utilise une alimentation électrique sans transformateur. Ne pas toucher les bornes d'entrée pendant la mise sous tension.
- Les appareils d'entrées externes utilisés pour contrôler le temporisateur doivent être équipés d'un transformateur d'isolation et d'une sortie non mise à la masse.
- Lorsque 2 temporisateurs ou plus sont contrôlés par le même contact ou transistor d'entrée, connecter les bornes #2 des temporisateurs ensemble.
- Recommandations au sujet des lignes de signaux d'entrée externes:
  - Utiliser un câble blindé.
  - Le câble doit être le plus court possible.
  - Séparer les câbles des signaux d'entrée de l'alimentation électrique pour le temporisateur mais aussi des autres tensions ou lignes électriques.

WARNUNG:
VORSICHT:

- Vor Installation oder Servicearbeiten Stromversorgung zur Vermeidung von elektrischem Schlag unterbrechen.
- Das Zeitrelais nicht aus dem Gehäuse entfernen. Die Garantie für das Produkt wird dadurch ungültig gemacht.
- Vor Veränderungen im Zeitregelungsbereich, Auswahl einer Einheit oder Betriebsart, die Stromzufuhr unterbrechen.
- Das 700-HR Zeitrelais nutzt transformatorlose Stromversorgung. Die Eingangsklemmen nicht berühren, wenn Strom zugeführt wird.
- Die externen Eingangsgeräte, die zur Kontrolle des Zeitrelais benutzt werden, sollten mit einem Trenntrafo und einem nichtgeerdeten Ausgang ausgestattet sein.
- Wenn zwei oder mehrere Zeitrelais durch dieselben Eingangskontakte oder den Transistor kontrolliert werden, Klemmen Nr. 2 der Zeitrelais verbinden.
- Empfehlungen für die externen Eingangssignal-Leitungen:
  - Abgeschirmten Draht benutzen.
  - Den Draht so kurz wie möglich halten.
  - Eingangssignal-Leitungen vom Netzanschluss für das Zeitrelais und von anderen Spannungs- oder Stromleitungen getrennt halten.

ADVERTENCIA:
PRECAUCION:

- Desconecte la corriente eléctrica antes de la instalación o servicio para evitar descargas eléctricas.
- No saque el temporizador de su recinto. Esto invalidará la garantia del producto.
- Desconecte la energia antes de cambiar el rango de temporización, la selección de modalidad o de la unidad.
- El temporizador 700-HR usa un suministro eléctrico sin transformador. No toque los bornes de entrada cuando la energia esté conectada.
- Los dispositivos de entrada externos usados para controlar el temporizador deben estar equipados con un transformador aislador y una salida sin conexión a tierra.
- Cuando 2 o más temporizadores estén controlados por el mismo transistor o contacto de salida, conecte los bornes #2 de los temporizadores juntos.
- Recomendaciones para lineas externas de señal de entrada:
  - Use cable blindado.
  - Mantega el cable tan corto como sea posible.
  - Separe los cables de señal de entrada de los del suministro eléctrico para el temporizador y los de otros voltajes o lineas eléctricas.

ADVERTÊNCIA:
ATENÇÃO:

- Para evitar choques, desligar a corrente elétrica antes de iniciar a instalação.
- Não remova temporizador da embalagem. Isto invalidará a garantia do produto.
- Desligar energia antes de alterar a temporização, a seleção de modalidade e da unidade.
- O temporizador 700-HR utiliza um transformador para a energia. Não toque os terminais da entrada quando energia é ativada.
- Os dispositivos de entrada externa devem ser equipados com transformador isolante e saída sem conexão terra.
- Quando 2 ou mais temporizadores são controlados pelo mesmo contato de entrada ou transistor, conectar, juntos, os terminais #2 dos temporizadores.
- Recomendação para linhas externas de sinal de entrada:
  - Use fio encapado.
  - Mantenha o fio tão curto o quanto for possivel.
  - Separe os fios de sinal de entrada dos elétricos do temporizador e dos outros elétricos ou de voltagem diferentes.

Differential Tripping – It sets us apart

Unique to IEC-style overload relays is their ability to provide *accelerated* tripping under single phase conditions. This concept is made possible by an ingenious double slide bar assembly called a "differential tripping" mechanism.

In Figure A, Slide Bar I is spring loaded to the right while Slide Bar II is spring loaded to the left. Hinge points connect the two slide bars to the tripping lever. Under a three phase symmetrical load (<FLA) the bimetal elements bend simultaneously. This causes the two slide bars to act as a single unit, positioning the tripping lever just short of tripping the normally closed contact. A three phase symmetrical overload (>FLA), however, would bend the bimetals even more, causing the tripping lever to trip the device.

The purpose of the two slide bars becomes quite evident during a single phase condition. In Figure B, if one of the phases is lost (L3 in this example), the cold bimetal element holds Slide Bar II in the same position while the additional current passing through the two remaining bimetal elements shifts Slide Bar I. This action produces a cantilever effect, accelerating the movement of the tripping lever toward the trip contacts. Any unbalanced loading of one or more of the three bimetal elements will cause this differential shift between the slide bars; thus the name "Differential Tripping."

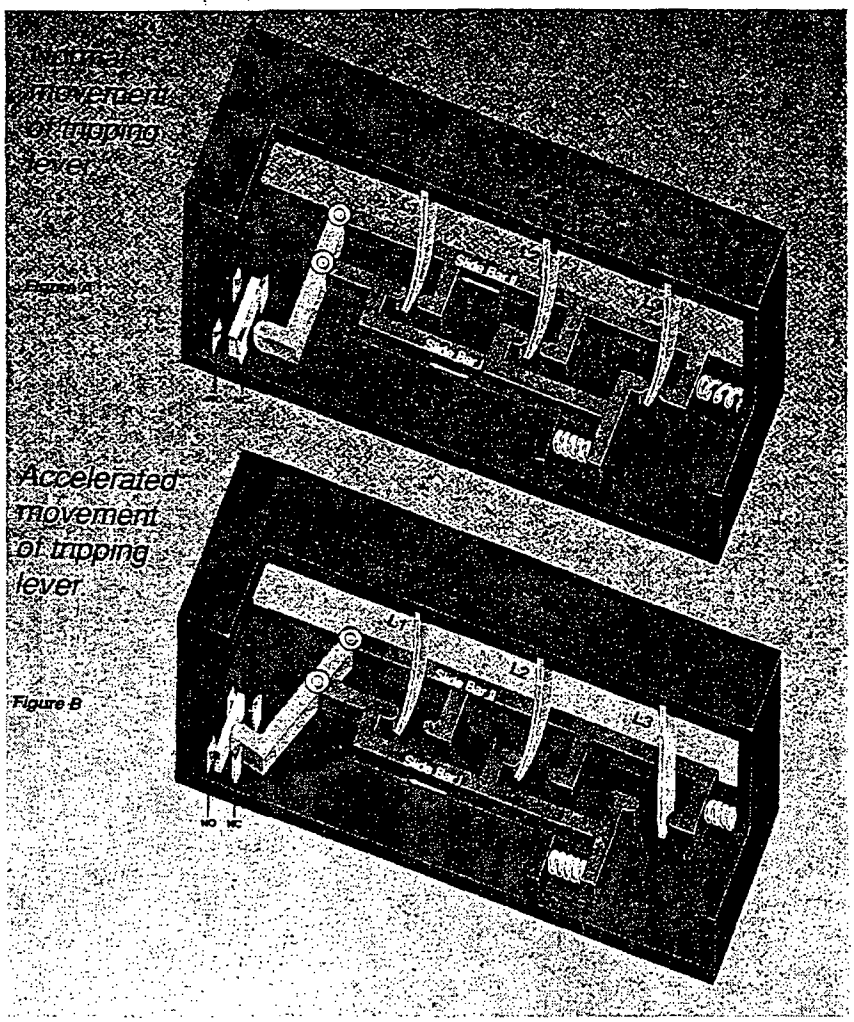

Accurate, reliable and consistant thermal overload protection

Thermal overload relays must have a high degree of tripping accuracy and consistency to protect motors. To achieve this, CT3 overload relays utilize permanently installed bimetal elements rather than interchangeable "heaters". This enables us to precisely calibrate every CT3 at the factory *as one unit*, eliminating inaccurate tripping characteristics often caused when combining parts in the field. Factory sealed calibration of every CT3 device assures a faithful reproduction of the published time/current tripping curve. This guarantees reliable and exact motor protection... every time.

Thermal response curve

The solid curve shows the mean trip times of a CT3-12 device at 20°C ambient temperature starting from a cold state. The dashed line shows mean trip times for an operationally warm device. Different models may have slightly different time/current characteristics.

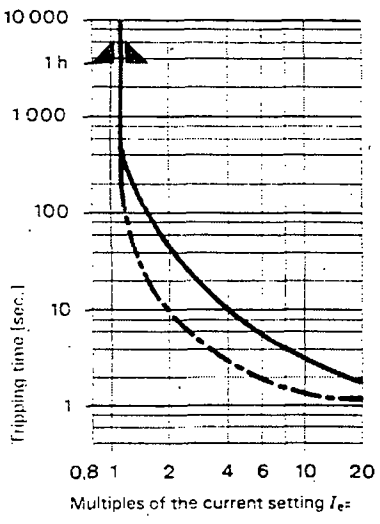

CA3 Selection Guide ①

Contactor	Continuous Amp Rating		Maximum Horsepower						Equivalent NEMA Ratings
			Single Phase		Three Phase				
	Open	Encl.	115V	230V	200V	230V	460V	575V	
CA3-9	25	24	1/3 1/3	1 1	2 1 1/2	2 1 1/2	5 2	7 1/2 2	NEMA Size 00
CA3-12	25	24	1/2	2	3	3	7 1/2	10	② Size 00+
CA3-16	25	24	1 1	3 2	5 3	5 3	10 5	15 5	NEMA Size 0
CA3-23A	40	36	1 1/2	3	5	5	10	15	② Size 0+
CA3-23	40	36	2 2	3 3	7 1/2 7 1/2	7 1/2 7 1/2	15 10	20 10	NEMA Size 1
CA3-30	40	36	2	5	10	10	20	25	② Size 1 1/2
CA3-37	50	45	3	5	10	10	25	30	② Size 1 3/4
CA3-43	50	45	3 3	7 1/2 7 1/2	10 10	15 15	30 25	40 25	NEMA Size 2
CA3-60	80	72	5	10	15	20	40	50	② Size 2 1/2
CA3-72	80	72	5	10	20	20	50	60	② Size 2 3/4

① Sprecher + Schuh ratings are in **Black Type.** NEMA equivalent ratings are in **White Type.**
② Sprecher + Schuh intermediate ratings.

Dimensions mm (inches)

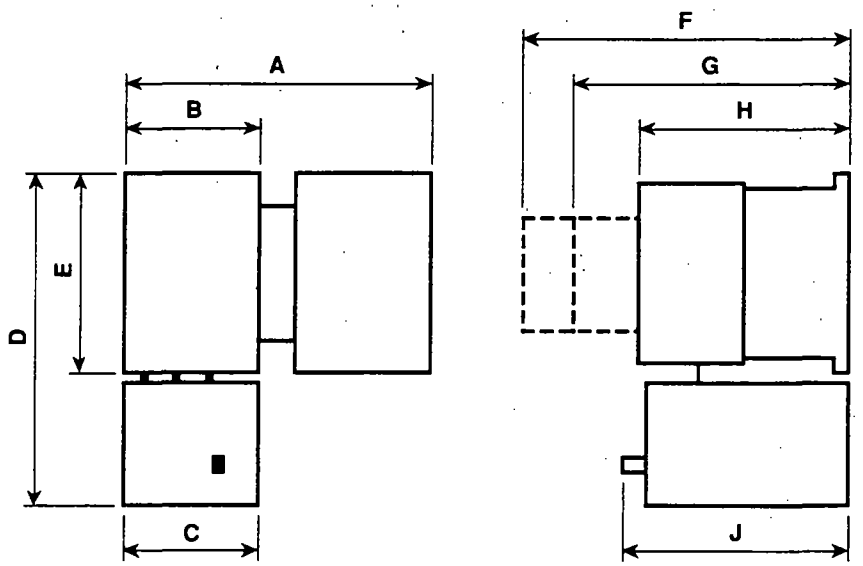

Code	Description	Contactor Series		
		CA3-9, 12 & 16	CA3-23A, 23 & 30	CA3-37, 43, 60 & 72
A	Width - 2 contactors w/ mech interlock	104.5 (4.11)	124.5 (4.90)	159 (6.26)
B	Width - contactor only	44.5 (1.75)	54.5 (2.15)	74 (2.91)
C	Width - CT3 O/L relay only	① 49 (1.93)	49 (1.93)	69.5 (2.74)
D	Heigth - contactor & CT3 O/L relay	119 (4.68)	128 (5.04)	188 (7.40)
E	Heigth - contactor only	70 (2.75)	75 (2.95)	114 (4.49)
F	Depth - contactor w/ latch or timer	② 129.5 (5.10)	134 (5.27)	152 (5.98)
G	Depth - contactor w/aux contact block	② 108 (4.25)	114 (4.49)	131 (5.16)
H	Depth - contactor only	② 79 (3.11)	84 (3.31)	104 (4.07)
J	Depth - CT3 O/L relay only	③ 92 (3.62)	92 (3.62)	110 (4.33)

① For CT3K O/L relay the dimensions are 43 (1.69).
② For device with DC coil add 24 (0.94).
③ For CT3K O/L relay the dimensions are 85 (3.35).

Specifications

Standards
UL, CSA, SEV, DEMKO, SEMKO, NEMKO, RINA, Bureau Veritas, CEBEC, Lloyds Reg of Shipping, Seti, Germanischer Lloyd, USSR Reg

Rated Insulation Voltage
UL, NEMA, CSA 600V
IEC, AS, BS, SEV, VDE 660V

Test Voltage ..... 3000 volts (1 minute)

Maximum Coil Voltage ..... 110% of rated voltage

Pull-in Voltage
CA3-9 thru CA3-16 ..... 80% of rated voltage
CA3-23A thru CA3-30 ..... 85% of rated voltage
CA3-37 thru CA3-72 ..... 80% of rated voltage

Drop-out Voltage
AC coil
CA3-9 thru CA3-30 ..... 35-65% of rated voltage
CA3-37 thru CA3-72 ..... 35-55% of rated voltage
DC coil ..... 10-25% of rated voltage

Coil Burden
AC inrush VA (W)
CA3-9 thru 16 ..... 59 (46)
CA3-23A thru 30 ..... 90 (65)
CA3-37 thru 72 ..... 190 (103)
AC sealed VA (W)
CA3-9 thru 16 ..... 7.2 (2.2)
CA3-23A thru 30 ..... 8.6 (2.5)
CA3-37 thru 72 ..... 17 (4.9)
DC inrush VA
CA3-9 thru 16 ..... 7.4
CA3-23A thru 30 150
CA3-37 thru 72 350
DC sealed VA
CA3-9 thru 16 ..... 7.4
CA3-23A thru 30 ..... 3.8
CA3-37 thru 72 ..... 5.5

Switching Delay
Closing
CA3-9 thru CA3-16 ..... 10-20ms AC/20-60ms DC
CA3-23A thru CA3-30 ..... 10-20ms
CA3-37 thru CA3-72 ..... 12-22ms
Opening
CA3-9 thru CA3-72 ..... 8-18ms

Ambient Temperature
100% rated current ..... -25°C to +60°C
85% rated current ..... -25°C to +70°C

Auxiliary Contacts
Standard
CA3-9 thru 16 ..... 1 NO (NC available)
CA3-23A thru 30 ..... 1 NO (NC available)
CA3-37 thru 72 ..... 1 NO & 1 NC
Additional maximum (any combination of NO or NC)
CA3-9 thru 16 ..... 4 (for a total of 5)
CA3-23A thru 30 ..... 5 (for a total of 6)
CA3-37 thru 72 ..... 5 (for a total of 7)

sprecher+schuh

Sprecher + Schuh, Inc.
Corporate Headquarters
15503 W. Hardy St.
Houston, TX 77060
(713) 931-7000

PS 1019 – 3/91

Exceptional motor protection is assured with CT3 overload relays

Sprecher + Schuh has always paid particular attention to the subject of motor protection. This concern is reflected in our CT3 line of thermal overload relays which include many standard features not available with traditional overload protection devices. Only two CT3 frame sizes cover the entire CA3 contactor range.

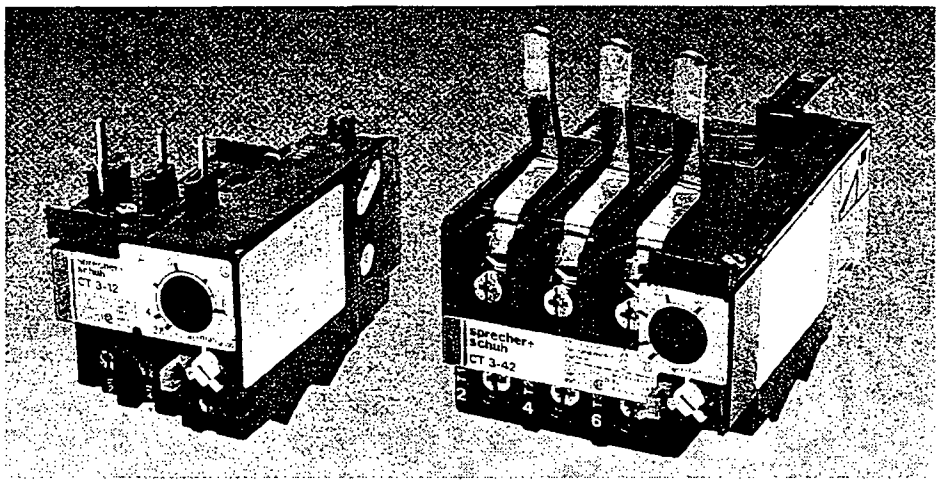

Superior "Class 10" characteristics

Today's T-Frame motors have less copper and iron than the old U-Frame motors that were popular when traditional "Class 20" overload relays were designed. For this reason, faster "Class 10" overloads like the CT3, have been recognized by many motor manufacturers as the ideal type to assure optimum motor protection.

Protection from single phase conditions

A unique feature not found in traditional thermal overload relays provides accelerated tripping under single phase conditions. This is accomplished with a special "differential tripping" mechanism built into every CT3 device (see diagram).

Ambient temperature compensation

Automatic ambient temperature compensation is another important feature standard with the CT3 series. The overload continually adjusts to surrounding temperatures between –25°C and +70°C so that trip times remain constant. This is especially important in cold climates where the trip times of uncompensated overloads can increase far beyond the safe limit for the motor.

Convenient dial adjustment of motor FLA

Rather than changing "heaters" to set the overload to the motor's FLA, CT3 relays have a dial adjustment on the faceplate. This convenience offers a wide range of FLA settings and allows you to accurately set or reset the overload in seconds.

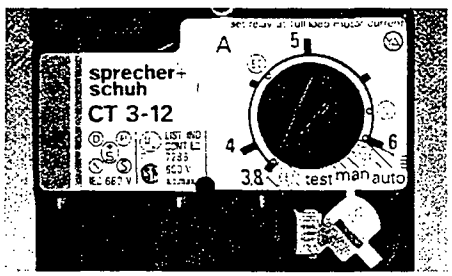

Other standard features

CT3 overloads feature a fail-safe "trip free" design which prevents the device from being held closed during an overload. In addition, a selectable reset button permits any one of three reset options to be chosen: test, manual or automatic modes.

A separate NO signal contact is also provided which is isolated from the NC trip contact. This permits the use of a trip signal voltage different than that of the control voltage.

The CT3K Excellence and economy

The economic CT3K thermal overload relay also provides excellent "Class 10" protection that is accurate and consistent. Although CT3K's possess no differential tripping mechanism, they nevertheless trip under single phase conditions at a maximum of 1.25 x set current. This is achieved by a direct current calibration procedure performed on *every* device before it leaves the factory.

The CT3K also features permanently installed bimetal elements and a dial adjustment to accurately set the motor's FLA.

An auxiliary NO contact block is offered as an available option which snaps onto the top of any CT3K. This isolated auxiliary contact can be used as an alarm contact, for example.

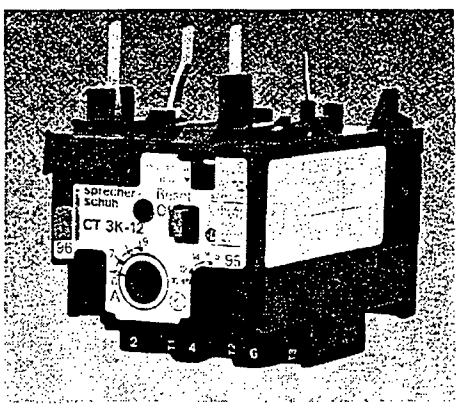

Modular accessories provide more performance in less space

A comprehensive selection of modular accessories allows limitless contactor and starter configurations. All accessory modules have a standard coupling system that quickly snaps to the top or side of any CA3 contactor, requiring little or no additional panel space.

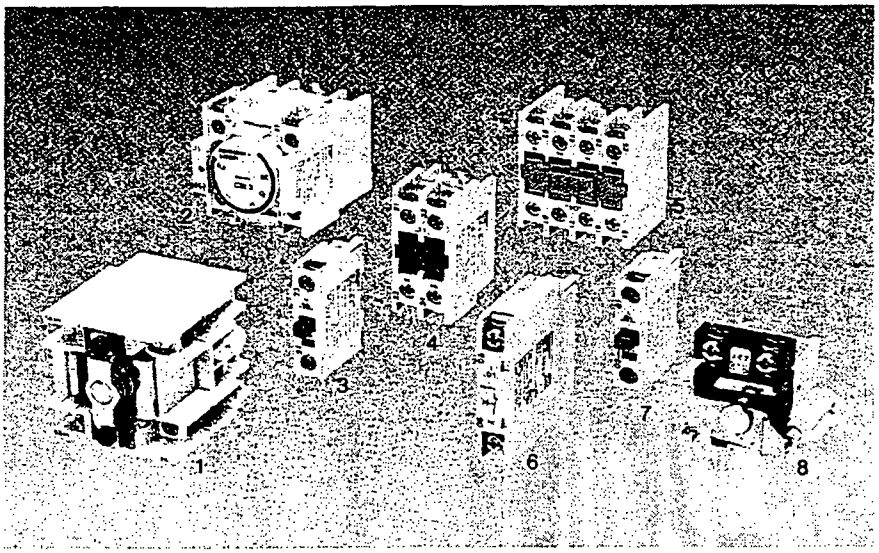

1 Mechanical latch – Holds the contactor closed so voltage can be removed from the coil.

2 Timing element – Provides on-delay or off-delay of the contactor (3 to 180 seconds).

3 Auxiliary contact block (1 pole).

4 Auxiliary contact block (2 pole).

5 Auxiliary contact block (4 pole).

6 Auxiliary contact block (1 pole - 40ms delay).

7 Auxiliary contact block (1 pole - late break).

8 Reset module – For remote reset of CT3 overload relay.

Other accessories include:
Mechanical interlocks
RC links and neutral links
Reset extension rods
Various terminals and bridges
Terminal protection covers
Labeling and marking options

Enclosed starters for any application

The entire CA3 contactor/starter line is available in all configurations, including combination and reduced voltage starters, pump panels and others.

A *pre-assembled* compact starter is also available for motors up to 20HP (@ 460V). This cost effective space-saving unit comes in a high impact watertight enclosure with built-in START/STOP push-buttons for speedy installation.

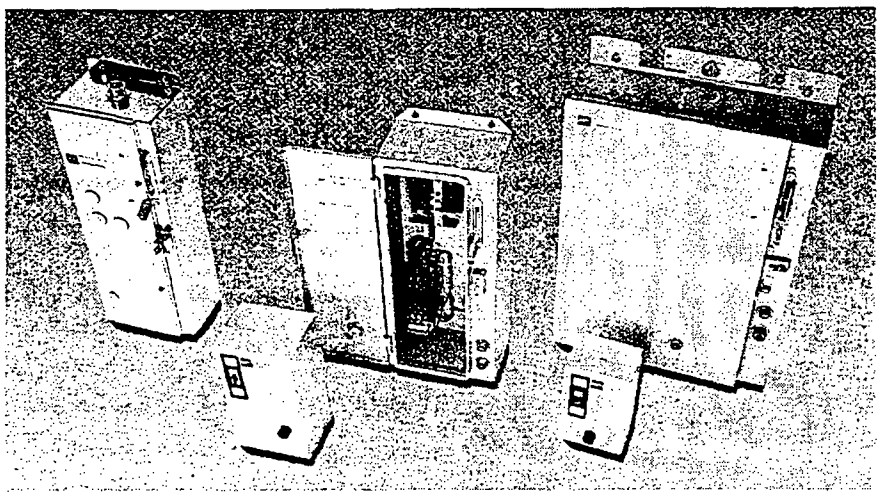

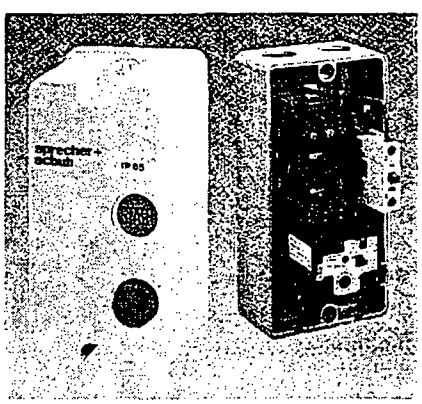

Safety in mind

The setting of timing elements or resetting of overload relays inside enclosures is often performed on live installations and is the most frequent cause of electrical accidents. For this reason, all CA3 contactors and accessories, as well as CT3 overload relays, offer finger and back of hand protection in accordance with the strictest international standards.

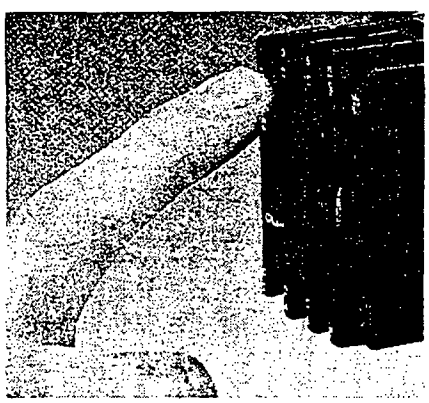

sprecher+
schuh

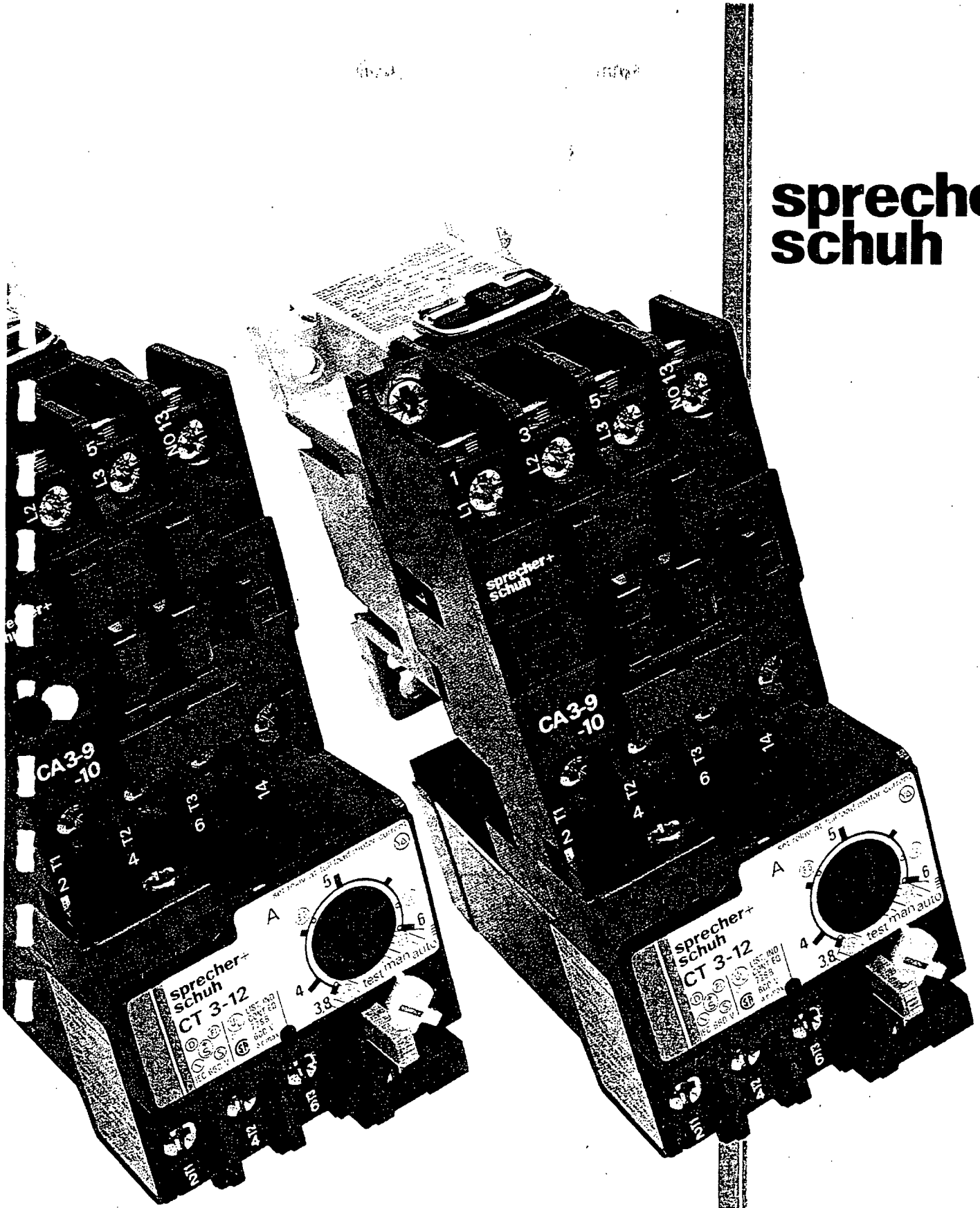

CA3 Contactor/Starter Series

Proven contactors and
motor protection for
applications up to 50HP

The powerful contactor system with decisive advantages

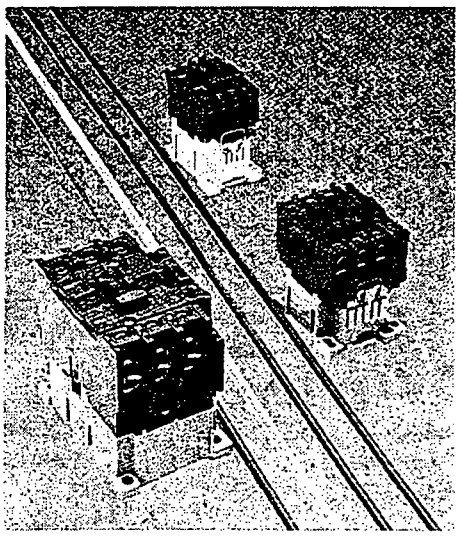

The CA3 series is Sprecher + Schuh's most popular line of contactors and starters. This versatile series was developed to meet the demand for smaller size devices without reducing reliability or performance. On average, every CA3 device is over 40% smaller than traditional contactors in this size class.

A perfect match

A wide selection of ten contactors is available in only three different frame sizes covering the range from 5 to 50 HP (@460V). This broad selection provides a contactor size for virtually every horsepower increment, allowing you to precisely match your motor with the appropriate CA3 starter.

Rugged performance

Where traditional contactors rely on physical size, Sprecher + Schuh's CA3 series achieves rugged performance through a number of special design features. "Bounce free" contacts and high contact pressure allow the devices to handle high inrush currents with no effect on performance.

Due to their enclosed design, CA3 components are not affected by unfavorable climatic conditions. They also operate reliably under vibration and shock conditions such as those found in vehicles and ships.

Maximum convenience

The CA3 line is completely modular for fast and trouble free installation and maintenance. Most contactors are DIN-rail mountable so they can be installed, moved or replaced quickly. All terminals are "captive" and are shipped in the raised position, saving you an operation. The universal terminal screws can be tightened with conventional, slot or posidrive screwdrivers and a limit stop prevents the conductor from being pushed into the contact chamber when wiring.

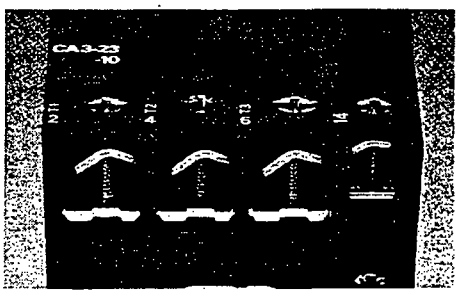

Easy coil changes

Simple and rapid coil changes are possible without tools on the CA3-9 through CA3-30, while only two screws must be loosened on the largest frame size. Reset solenoids and latch coils are also easily changed with no loose or small components to fumble with.

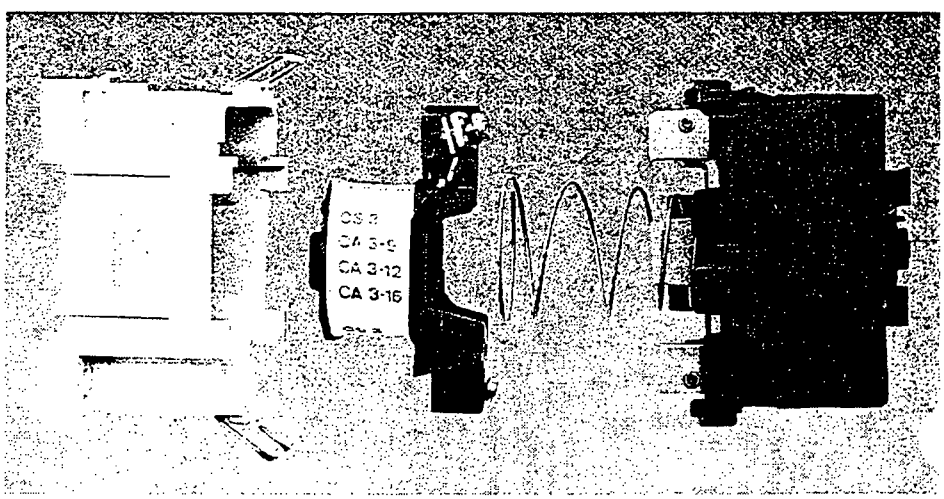

CLEVAFLEX

HIGH VELOCITY ATTENUATOR

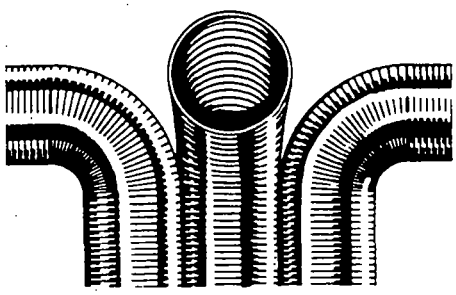

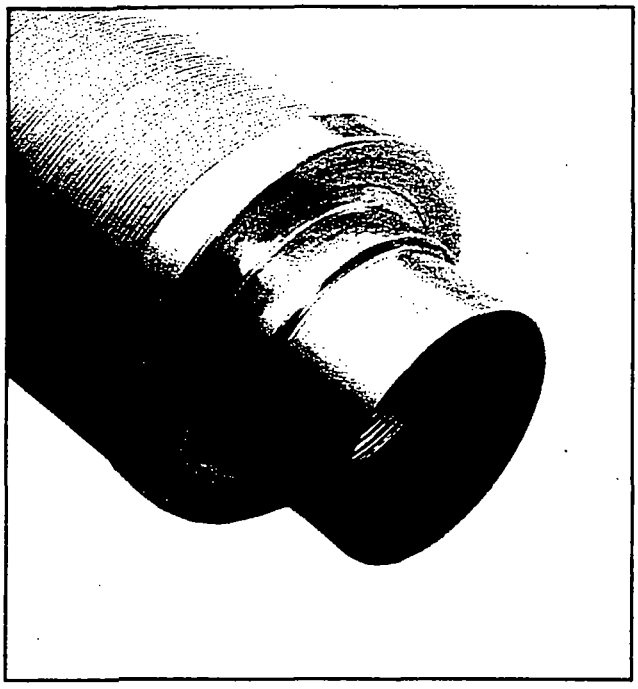

CONSTRUCTION:

Inner Liner consists of Clevaflex Type S single-ply aluminum perforated flexible duct.

This Inner Core is covered by 1" thick fiberglass of one pound density.

Outer Liner consists of Clevaflex Type 12 two-ply bonded aluminum with inlet and outlet collars.

UNDERWRITERS LABORATORY LISTED

PHYSICAL DATA

Nominal Diameter—Inches	4	5	6	7	8	10	12	14
Inside Diameter—Inches	← NOMINAL—EXACT →							
Outside Diameter—Inches	6	7	8	9	10	12	14	16
Standard Length	← FIVE FEET—CUSTOM DESIGN AVAILABLE →							
Operating Temperature Range	← 0°—350° →							
Working Pressure—Inches of Water	← 20" POSITIVE OR NEGATIVE →							

SPECIFICATIONS

High velocity attenuator, where indicated, shall be a double wall product with a perforated inner liner of single-ply aluminum with a minimum of seven mechanically formed corrugations per joint, covered by a one inch thick by one pound density, fiberglass blanket. The outer liner shall be a bonded two-ply laminate, closely corrugated for strength and air-tightness, capable of 20" of positive or negative pressure. Spun aluminum inlet and outlet collars shall be factory sealed to the inner and outer liners. This unit shall be tested by a recognized, independent acoustical laboratory in accordance with Air Diffusion Council standards for acoustics FD 72-R,. High Velocity Acoustical Attenuator shall be manufactured by Clevaflex, Inc., Cleveland, Ohio 44135.

Clevaflex, Inc.

4081 West 150th Street
Cleveland, Ohio 44135
Telephone (216) 941-6505
Fax (216) 941-8742

CLEVAFLEX
HIGH VELOCITY ATTENUATOR

8" ø CLEVAFLEX DUCT RADIATED NOISE REDUCTION IN dB

OCTAVE BAND NO.	(2)	(3)	(4)	(5)	(6)	(7)	(8)
CENTER FREQ. Hz	125	250	500	1000	2000	4000	8000
NOISE REDUCTION @ 0 FLOW	19	24	38	36	36	29	24
NOISE REDUCTION @ 2500 fpm	17	23	36	35	35	29	24

Note: Radiated noise reduction does not vary substantially with diameter. All values shown are available for diameters 4"-14".

SOUND ATTENUATION WITH AND WITHOUT AIR FLOW

STRAIGHT ATTENUATOR INSERTION LOSS (I.L.) IN DB

OCTAVE BAND NO.	(2)	(3)	(4)	(5)	(6)	(7)	(8)
CENTER FREQUENCY (Hz)	125	250	500	1000	2000	4000	8000
I.L @ 0 FLOW							
4" Attenuator	12	15	30	40	42	28	18
6" Attenuator	9	10	21	30	35	18	12
8" Attenuator	6	7	19	26	25	13	11
14" Attenuator	4	6	18	22	20	10	9
I.L @ 2500FPM							
4" Attenuator	11	14	29	38	42	27	18
6" Attenuator	8	9	20	28	32	17	12
8" Attenuator	4	6	17	25	24	13	11
14" Attenuator	3	5	15	21	19	10	9

ELBOW ATTENUATOR LOSS (I.L.) IN dB

OCTAVE BAND NO.	(2)	(3)	(4)	(5)	(6)	(7)	(8)
CENTER FREQUENCY (Hz)	125	250	500	1000	2000	4000	8000
I.L @ 0 FLOW							
4" Attenuator	5	13	29	41	35	38	6
6" Attenuator	2	4	17	32	34	15	7
8" Attenuator	5	4	16	28	31	11	6
14" Attenuator	5	4	15	26	29	9	7
I.L @ 2500 FPM							
4" Attenuator	4	13	29	36	33	19	6
6" Attenuator	2	4	17	33	33	14	7
8" Attenuator	5	3	16	28	30	12	6
14" Attenuator	5	4	15	26	29	10	7

As tested by Kodaras Acoustical Laboratories, Division Electrical Testing Laboratories, Inc. Aug. 31-Sept. 2, 1979

Note: Insertion Loss values should not be directly compared with similar data for single wall flexible duct. Single wall data includes the effect of noise transmitted through the wall into the surrounding space.

While the herein published data is the result of performance under accurate laboratory conditions, Clevaflex cannot be responsible for exact reproduction of performance characteristics in the field due to the many outside variables associated with any installation.

Test Procedures: A smooth, straight empty metal duct equal in diameter and length (5 feet) of Clevaflex High Velocity Attenuator is installed in a duct system. Test signals are generated at one end of the duct and then measured in a reverberation room at the other end. The empty metal duct is removed and replaced with a Clevaflex High Velocity Attenuator and the test repeated. These procedures are followed for different air flows as well as for both straight and "elbowed" (90°) flex.

Standard Line
Wide Range of Flows, Angles and Materials
Full and Hollow Cone

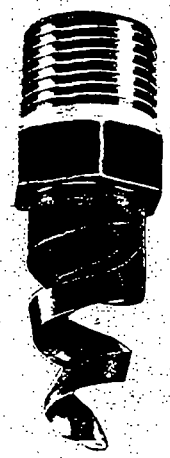

Full Cone 60° NN

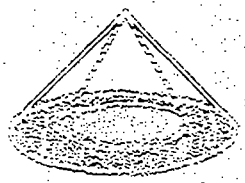

Full Cone 90° FCN

Full Cone 90° FFCN

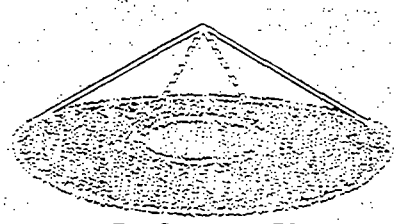

Full Cone 120° FC

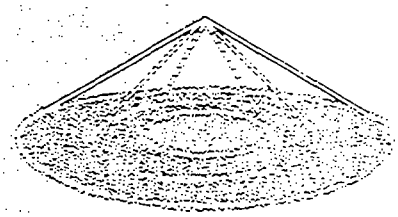

Full Cone 120° FFC

DESIGN

Unique Bete spiral nozzles
solve many difficult spray problems
HIGH ENERGY EFFICIENCY
One piece - no internal parts
Clog-free performance
High discharge velocity

SPRAY CHARACTERISTICS

Wide range of flow rates and spray angles
Fine atomization
Spray patterns - full and hollow cone
Spray angles - 50° to 120°
Flow rates - .7 to 3350 gpm
Higher flow rates available

FULL CONE

60° Full Cone available in metals only.

Spray Angle	Male Pipe Size	Nozzle Number	Orifice Dia.	Free Passage Dia.	Overall Length	Hex. or Round Dia.	Weight Plastic Oz.	Weight Metal Oz.	GALLONS PER MINUTE @ PSI 10	20	30	40	50	60	80	100	200*	400*
60°	1/4	TF6NN	3/32	3/32	1 7/8	3/4		1	.7	1.0	1.2	1.4	1.6	1.7	2.0	2.2	3.1	4.4
		TF8NN	1/8	1/8	1 7/8	3/4		1	1.3	1.9	2.3	2.6	2.9	3.2	3.8	4.1	6.0	8.2
		TF10NN	5/32	1/8	1 7/8	3/4		1	2.0	2.9	3.5	4.0	4.5	5.0	5.9	6.5	9.2	13.0
	3/8	TF6NN	3/32	3/32	1 7/8	3/4		1	.7	1.0	1.2	1.4	1.6	1.7	2.0	2.2	3.1	4.4
		TF8NN	1/8	1/8	1 7/8	3/4		1	1.3	1.9	2.3	2.6	2.9	3.2	3.8	4.1	6.0	8.2
		TF10NN	5/32	1/8	1 7/8	3/4		1	2.0	2.9	3.5	4.0	4.5	5.0	5.9	6.5	9.2	13.0
		TF12NN	3/16	1/8	1 7/8	3/4		1 1/2	3.0	4.2	5.2	6.0	6.7	7.4	8.5	9.5	13.4	19
		TF14NN	7/32	1/8	1 7/8	3/4		1 1/2	4.0	5.7	7.0	8.1	9.0	10.0	11.4	12.5	18	25
		TF16NN	1/4	1/8	1 7/8	3/4		1 1/2	5.3	7.5	9.2	10.6	11.8	13.0	15.0	16.7	24	33
		TF20NN	5/16	1/8	1 7/8	3/4		1 1/2	8.2	11.7	14.3	16.5	18.4	20.0	23.3	26.1	36	52
	1/2	TF24NN	3/8	3/16	2 1/2	7/8		2 3/4	12.0	17.0	20.8	24.1	26.8	29.4	34	38	54	76
		TF28NN	7/16	3/16	2 1/2	7/8		2 3/4	16.4	23	28	33	37	40	46	52	74	104
	3/4	TF32NN	1/2	3/16	2 3/4 †	1 1/8		4 1/2	21	30	37	42	47	52	60	67	94	134
	1	TF40NN	5/8	1/4	3 5/8 ‡	1 3/8		7 1/2	34	48	57	67	74	81	94	105	148	210
		TF48NN	3/4	1/4	3 5/8 ‡	1 3/8		7 1/2	47	67	83	95	107	117	135	151	214	302
	1 1/2	TF56NN	7/8	5/16	4 3/8	2		21	64	93	112	129	145	159	184	205	290	410
		TF64NN	1	5/16	4 3/8	2		21	84	120	147	169	190	208	240	268	380	536
		TF72NN	1 1/8	5/16	4 3/8	2		21	96	137	165	192	213	235	270	302	426	604
90°	1/8	TF6FCN	3/32	3/32	1 11/16	3/4	1/2	1	.7	1.0	1.2	1.4	1.6	1.7	2.0	2.2	3.1	4.4
		TF8FCN	1/8	1/8	1 11/16	3/4	1/2	1	1.3	1.9	2.3	2.6	2.9	3.2	3.8	4.1	6.0	8.2
	1/4	TF6FCN	3/32	3/32	1 7/8	3/4	1/2	1	.7	1.0	1.2	1.4	1.6	1.7	2.0	2.2	3.1	4.4
		TF8FCN	1/8	1/8	1 7/8	3/4	1/2	1	1.3	1.9	2.3	2.6	2.9	3.2	3.8	4.1	6.0	8.2
		TF10FCN	5/32	1/8	1 7/8	3/4	1/2	1	2.0	2.9	3.5	4.0	4.5	5.0	5.9	6.5	9.2	13.0
	3/8	TF12FCN	3/16	1/8	1 7/8	3/4	3/4	1 1/2	3.0	4.2	5.2	6.0	6.7	7.4	8.5	9.5	13.4	19
		TF14FCN	7/32	1/8	1 7/8	3/4	3/4	1 1/2	4.0	5.7	7.0	8.1	9.0	10.0	11.4	12.5	18	25
		TF16FCN	1/4	1/8	1 7/8	3/4	3/4	1 1/2	5.3	7.5	9.2	10.6	11.8	13.0	15.0	16.7	24	33
		TF20FCN	5/16	1/8	1 7/8	3/4	3/4	1 1/2	8.2	11.7	14.3	16.5	18.4	20.0	23.3	26.1	36	52
	1/2	TF24FCN	3/8	3/16	2 1/2	7/8	1	2 3/4	12.0	17.0	20.8	24.1	26.8	29.4	34	38	54	76
		TF28FCN	7/16	3/16	2 1/2	7/8	1	2 3/4	16.4	23	28	33	37	40	46	52	74	104
	3/4	TF32FCN	1/2	3/16	2 3/4 †	1 1/8	1 1/2	4 1/2	21	30	37	42	47	52	60	67	94	134
	1	TF40FCN	5/8	1/4	3 5/8 ‡	1 3/8	2 1/2	7 1/2	34	48	57	67	74	81	94	105	148	210
		TF48FCN	3/4	1/4	3 5/8 ‡	1 3/8	2 1/2	7 1/2	47	67	83	95	107	117	135	151	214	302
	1 1/2	TF56FCN	7/8	5/16	4 3/8	2	5 1/2	21	64	93	112	129	145	159	184	205	290	410
		TF64FCN	1	5/16	4 3/8	2	5 1/2	21	84	120	147	169	190	208	240	268	380	536
		TF72FCN	1 1/8	5/16	4 3/8	2	5 1/2	21	96	137	165	192	213	235	270	302	426	604
	2	TF88FCN	1 3/8	7/16	5 7/8	2 1/2	6 1/2	26	140	198	240	280	310	340	395	438	620	876
		TF96FFCN	1 1/2	7/16	6 7/8	2 1/2	7 1/2	32	178	250	310	355	395	430	505	560	790	1120
	3	TF112FFCN	1 3/4	9/16	8	3 1/2	26	104	256	362	448	516	580	636	736	810	1160	1720
		TF128FFCN	2	9/16	8	3 1/2	26	104	336	480	588	676	760	832	960	1072	1520	2140
	4	TF160FFCN	2 1/2	5/8	9	4 1/2	40	160	525	750	920	1058	1188	1300	1500	1675	2370	3350

*High pressure operation recommended for metal nozzles only.

†Plastic length: 3 5/8" ‡Plastic length: 4 3/8"

For adapters and bushings, refer to Accessories page

TO ORDER: Specify Spray Angle, Pipe Size, Nozzle Number and Material

Magnehelic® Gage EXPLODED VIEW Series 2000

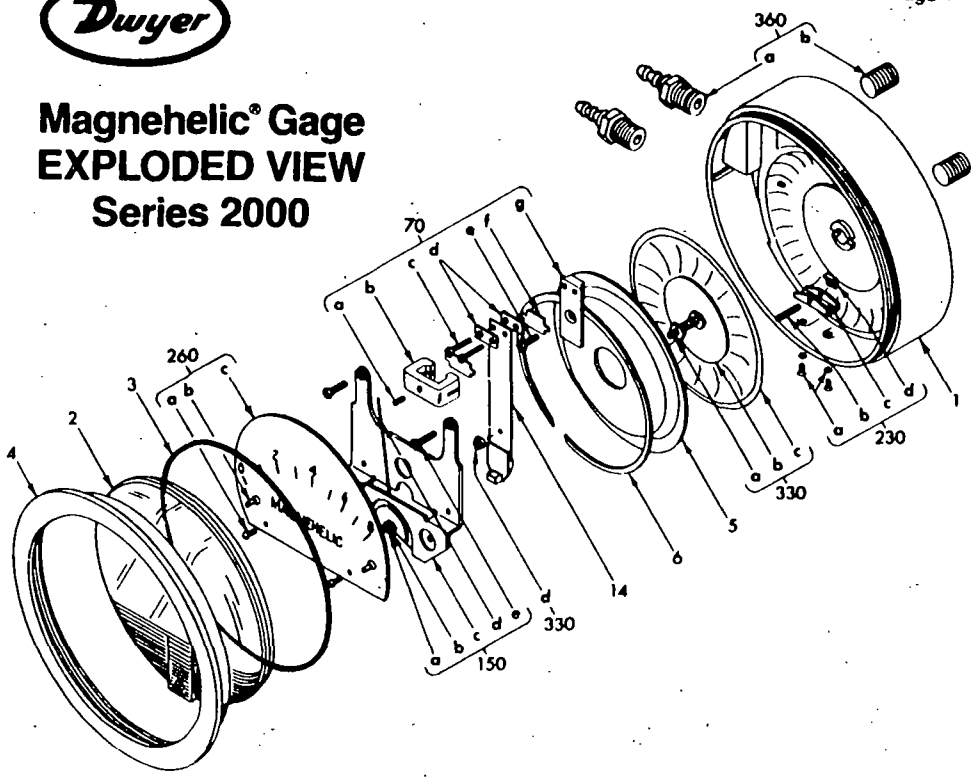

1. Case
2. Cover with zero adjust assy.
3. "O" ring seal
4. Bezel
5. Diaphragm sealing plate
6. Retaining ring
70. Range Spring assembly
    a. Clamp set screw
    b. Clamp
    c. Mounting screws (2 req'd)
    d. Clamping shoe (2 req'd)
    e. Clamp plate screw
    f. Spacer (2 req'd)
    g. Clamp plate
14. Range Spring with magnet
150. Wishbone Assembly – consists of:
    a. Front jewel
    b. Locking nut
    c. Wishbone
    d. Pointer
    e. Mounting screws (2 req'd)
    f. Helix assembly (not shown)
    g. Pivots (2 req'd) (not shown)
    h. Rear jewel (not shown)
230. Zero adjust assembly – consists of:
    a. Foot screws with washers (2 req'd)
    b. Adjust screw
    c. Foot
    d. Finger
260. Scale Assembly – consists of:
    a. Mounting screws (2 req'd)
    b. Bumper pointer stop (2 req'd)
    c. Scale
330. Diaphragm Assembly – consists of: (Arbor press needed to install)
    a. Linkage assy., complete
    b. Front plate
    c. Diaphragm
    d. Rear plate (not shown)
    e. Plate washer (not shown)
360. Mounting Hardware Kit
    a. Adapter – pipe plug ⅛" NPT to rubber tubing – (2 req'd)
    b. Pipe plug ⅛" NPT – (2 req'd)
    c. Mounting lug (3 req'd)
    d. Long screw (3 req'd)
    e. Short screw (3 req'd)

Ordering Instructions:

When corresponding with the factory regarding Magnehelic® gage problems, refer to the call-out numbers in this view. Be sure to include model number, pressure range, and any special options. Field repair is not recommended; contact the factory for repair service information.

OPERATING INSTRUCTIONS and PARTS LIST

Magnehelic® Differential Pressure Gage

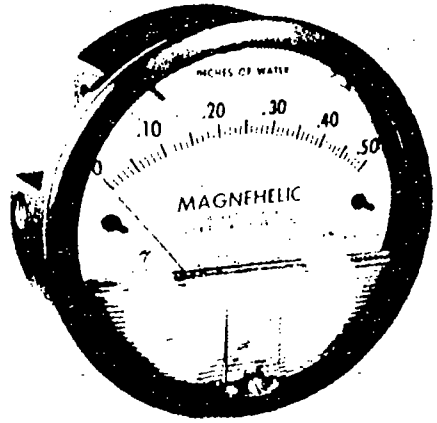

SPECIFICATIONS

Dimensions: 4-3/4" dia. X 2-3/16" deep.

Weight: 1 lb. 2 oz.

Finish: Baked dark gray enamel.

Connections: 1/8 N.P.T. high and low pressure taps, duplicated, one pair side and one pair back.

Accuracy: Plus or minus 2% of full scale, at 70°F. (Model 2000-0, 3%; 2000-00, 4%).

Pressure Rating: 15 PSI.

Ambient Temperature Range: 20° to 140°F.

Standard gage accessories include two 1/8" N.P.T. plugs for duplicate pressure taps, two 1/8" pipe thread to rubber tubing adapters, and three flush mounting adapters with screws.

Caution: For use with air or compatible gases only.

For repeated over-ranging or high cycle rates, contact factory.

Hydrogen Gas Precautionary Note: The rectangular rare earth magnet used in the standard gage may not be suitable for use with hydrogen gas since a toxic and explosive gas may form. For hydrogen service, consult the factory for an alternate gage construction.

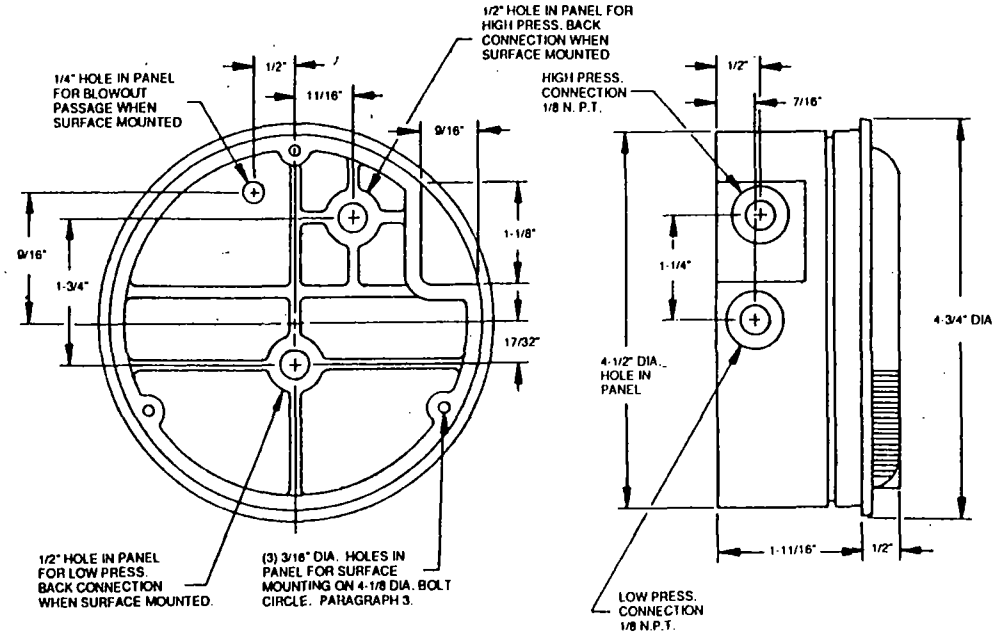

DWYER INSTRUMENTS, INC. | Telephone 219/879-8000
Fax 219/872-9057

Overpressure Protection: Standard Magnehelic gages are rated for a maximum pressure of 15 psig and should not be used where that limit can be exceeded. Newer models employ a rubber plug on the rear which will unseat and vent the gage at approximately 25 psig. When surface mounting units with this feature, provide a vent hole, as indicated on the dimension drawing, or allow a minimum 1/8" clearance when flush mounting.

1. Select a location free from excessive vibration and where the ambient temperature will not exceed 140°F. Also, avoid direct sunlight which accelerates discoloration of the clear plastic cover. Sensing lines may be run any necessary distance. Long tubing lengths will not affect accuracy but will increase response time slightly. Do not restrict lines. If pulsating pressures or vibration cause excessive pointer oscillation, consult the factory for ways to provide additional damping.

2. All standard Magnehelic gages are calibrated with the diaphragm vertical and should be used in that position for maximum accuracy. If gages are to be used in other than vertical position, this should be specified on the order. Many higher range gages will perform within tolerance in other positions with only rezeroing. Low range Model 2000-00 and metric equivalents must be used in the vertical position only.

3. Surface Mounting

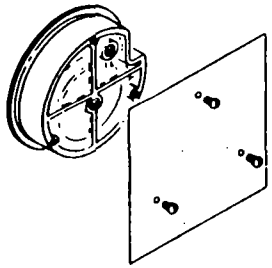

Locate mounting holes, 120° apart on a 4-1/8" dia. circle. Use No. 6-32 machine screws of appropriate length.

4. Flush Mounting

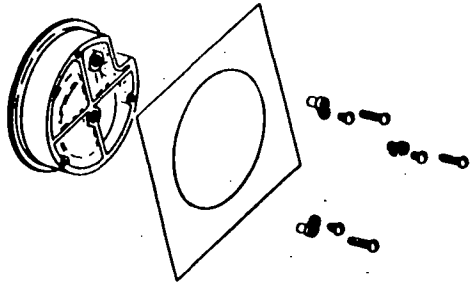

Provide a 4½" dia. opening in panel. Insert gage and secure in place with No. 6-32 machine screws of appropriate length, with adaptors, Part No. 360c, firmly secured in place. To mount gage on 1¼"-2" pipe, order optional A-610 pipe mounting kit.

5. To zero the gage after installation

Set the indicating pointer exactly on the zero mark, using the external zero adjust screw on the cover at the bottom. Note that the zero check or adjustment can only be made with the high and low pressure taps both open to atmosphere.

Operation

Positive Pressure: Connect tubing from source of pressure to either of the two high pressure ports. Plug the port not used. Vent one or both low pressure ports to atmosphere.

Negative Pressure: Connect tubing from source of vacuum or negative pressure to either of the two low pressure ports. Plug the port not used. Vent one or both high pressure ports to atmosphere.

Differential Pressure: Connect tubing from the greater of two pressure sources to either high pressure port and the lower to either low pressure port. Plug both unused ports.

When one side of gage is vented in a dirty, dusty atmosphere, we suggest an A-331 Filter Vent Plug be installed in the open port to keep inside of gage clean.

a. For portable use or temporary installation, use 1/8" pipe thread to rubber tubing adapter and connect to source of pressure with rubber or Tygon tubing.

b. For permanent installation, 1/4" O.D., or larger, copper or aluminum tubing is recommended. See accessory bulletin S-101 for fittings.

MAINTENANCE

Maintenance: No lubrication or periodic servicing is required. Keep case exterior and cover clean. Occasionally disconnect pressure lines to vent both sides of gage to atmosphere and re-zero. Optional vent valves, (bulletin S-101), should be used in permanent installations.

Calibration Check: Select a second gage or manometer of known accuracy and in an appropriate range. Using short lengths of rubber or vinyl tubing, connect the high pressure side of the Magnehelic gage and the test gage to two legs of a tee. Very slowly apply pressure through the third leg. Allow a few seconds for pressure to equalize, fluid to drain, etc., and compare readings. If accuracy unacceptable, gage may be returned to factory for recalibration. To calibrate in the field, use the following procedure.

Calibration:

1. With gage case, P/N 1, held firmly, loosen bezel, P/N 4 by turning counterclockwise. To avoid damage, a canvas strap wrench or similar tool should be used.
2. Lift out plastic cover and "O" ring.
3. Remove scale screws and scale assembly. Be careful not to damage pointer.
4. The calibration is changed by moving the clamp, P/N. 70-b. Loosen the clamp screw(s) and move slightly toward the helix if gage is reading high, and away if reading low. Tighten clamp screw and install scale assembly.
5. Place cover and 0-ring in position. Make sure the hex shaft on inside of cover is properly engaged in zero adjust screw, P/N 230-b.
6. Secure cover in place by screwing bezel down snug. Note that the area under the cover is pressurized in operation and therefore gage will leak if not properly tightened.
7. Zero gage and compare to test instrument. Make further adjustments as necessary.

Caution: If bezel binds when installing, lubricate threads sparingly with light oil or molybdenum disulphide compound.

Warning: Attempted field repair may void your warranty. Recalibration or repair by the user is not recommended. For best results, return gage to the factory. Ship prepaid to:

Dwyer Instruments, Inc.
Attn. Repair Department
55 Ward Street
Wakarusa, IN 46573

Trouble Shooting Tips:

• *Gage won't indicate or is sluggish.*

1. Duplicate pressure port not plugged.
2. Diaphragm ruptured due to overpressure.
3. Fittings or sensing lines blocked, pinched, or leaking.
4. Cover loose or "O" ring damaged, missing.
5. Pressure sensors, (static tips, Pitot tube, etc.) improperly located.
6. Ambient temperature too low. For operation below 20°F, order gage with low temperature, (LT) option.

• *Pointer stuck-gage can't be zeroed.*

1. Scale touching pointer.
2. Spring/magnet assembly shifted and touching helix.
3. Metallic particles clinging to magnet and interfering with helix movement.
4. Cover zero adjust shaft broken or not properly engaged in P/N 230-b adjusting screw.

We generally recommend that gages needing repair be returned to the factory. Parts used in various sub-assemblies vary from one range of gage to another, and use of incorrect components may cause improper operation or failure. Gages repaired at the factory are carefully calibrated and tested to assure "like-new" operation. After receipt and inspection, we will be happy to quote repair costs before proceeding.

Consult factory for assistance on unusual applications or conditions.

Use with air or compatible gases only.

DWYER INSTRUMENTS, INC.
P.O. BOX 373 • MICHIGAN CITY, INDIANA 46360, U.S.A.
Telephone 219/879-8000
Fax 219/872-9057
Telex 25916

SERIES 1950

INTEGRAL EXPLOSION-PROOF PRESSURE SWITCHES

Specifications - Installation and Operating Instructions

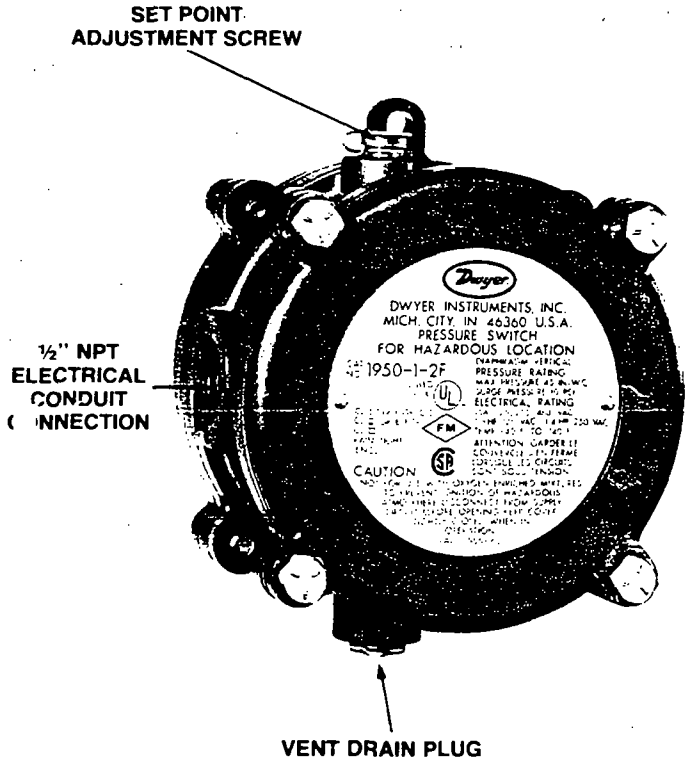

UL and CSA Listed, FM Approved For
CL. I GR. C,D – CL. II GR. E,F,G – CL. III

Model 1950 Switches: Operating ranges and dead bands.

To order specify Model Number	Operating Range Inches, W.C.	Approximate Dead Band	
		At Min. Set Point	At Max. Set Point
1950-04	0.03 to 0.35	0.02	0.09
1950-00	0.07 to 0.15	0.04	0.05
1950-0	0.15 to 0.5	0.10	0.15
1950-1	0.4 to 1.6	0.15	0.20
1950-5	1.4 to 5.5	0.3	0.4
1950-10	3.0 to 11.0	0.4	0.5
1950-20	4.0 to 20.0	0.4	0.6
Model Number	**Operating Range PSI**	**Approximate Dead Band**	
		Min. Set Point	**Max. Set Point**
1950P-2	.5 to 2.0	0.3 PSI	0.3 PSI
1950P-8	1.5 to 8.0	1.0 PSI	1.0 PSI
1950P-15	3.0 to 15.0	0.9 PSI	0.9 PSI
1950P-25	4.0 to 25.0	0.7 PSI	0.7 PSI
1950P-50	15.0 to 50	1.0 PSI	1.5 PSI

The New Model 1950 Explosion-Proof Switch combines the best features of the popular Dwyer Series 1900 Pressure Switch with a compact explosion-proof housing.

The unit is U.L. and CSA listed, FM approved for use in Class I, Groups C & D, Class II, Groups E, F, & G and Class III atmospheres. It is also totally rain-tight for outdoor installations. Twelve models allow set-points from .03 to 20 inches W.C. and from .5 to 50 PSI.

Easy access to the SPDT switch for electrical hook-up is provided by removing the top plate of the three-part aluminum housing. Adjustment to the set point of the switch can be made without disassembly of the housing. The unit is very compact, about half the weight and bulk of equivalent conventional explosion-proof switches.

CAUTION: Use of the Model 1950 switch with explosive media connected to the **low** pressure port (including differential pressure applications in such media) is not recommended. Switch contact arcing can cause an explosion inside the switch housing which, while contained, may render the switch inoperative. If switch is being used to sense a single positive pressure relative to atmosphere, run a line from the low pressure port to a non-hazardous area free of combustible gases.

PHYSICAL DATA

Temperature limits: –40°F to 140°F. 0°F to 140°F for 1950P-8, 15, 25, and 50.
Rated Pressure: 1950 — 45 IN. W.C., 1950P — 35 PSI, 1950P-50 only — 70 PSI.
Maximum surge pressure: 1950 — 10 PSI, 1950P — 50 PSI, 1950P-50 only — 90 PSI.
Pressure Connections: 1/8" NPT.
Electrical Rating: 15 amps, 125, 250,480 volts, 60 Hz. A.C. Resistive 1/8 H.P. @ 125 volts, 1/4 H.P. @ 250 volts, 60 Hz. A.C.
Wiring connections: 3 screw type; common, norm. open and norm. closed.
Conduit connections: 1/2" NPT.
Set point adjustment: *Screw type on top of housing. Field adjustable.*
Housing: Anodized cast aluminum.
Diaphragm: Molded fluorosilicone rubber. 04 model, silicone on nylon.
Calibration Spring: Stainless Steel.
Installation: Mount with diaphragm in vertical position.
Weight: 3 1/4 lbs. 04 model, 4 lbs., 7 oz.

Response Time: Because of restrictive effect of flame arrestors, switch response time may be as much as 10-15 seconds where applied pressures are near set point.

NOTE: The last number-letter combination in the 1950 model number identifies the switch electrical rating (number) and diaphragm material (letter). The 2F combination is standard as described in the physical data above. In the case of special models, a number 1 rating is the same as 2; a number 3 or 4 rating is 10A 125, 250, 480 VAC - 1/8 HP 125 VAC, 1/4 HP 250 VAC; and a number 5 or 6 rating is 1A 125 VAC. A letter B indicates a Buna-N diaphragm, N; Neoprene, S; Silicone, and V; Viton.

©Copyright 1989, DWYER INSTRUMENTS, INC.

FR 26-440332-00

DWYER INSTRUMENTS, INC.
P. O. BOX 373 • MICHIGAN CITY, INDIANA 46360, U.S.A.
Telephone 219/879-8000
Fax 219/872-9057 Telex 25916

SERIES 1950
INTEGRAL EXPLOSION-PROOF PRESSURE SWITCHES
Installation and Operating Instructions

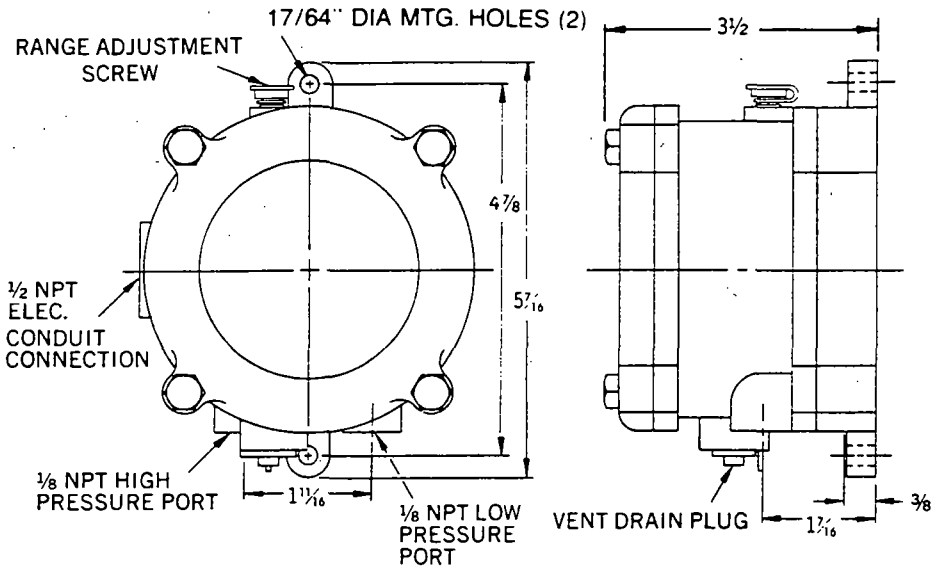

NOTE: For dimensions of Model 1950-04, request drawing 28-700175-00.

1950 SWITCH OUTLINE DIMENSIONS

INSTALLATION

1. Select a location that is free from excessive vibration, corrosive atmosphere and where the ambient temperature is between -40° and +140°F. Switch may be installed outdoors or in areas where the hazard of explosion exists. (See pg. 1 for specific types of hazardous service).
2. Mount standard switches with the diaphragm in a vertical plane and with switch lettering and Dwyer nameplate in an upright position. Some switches are position sensitive and may not reset properly unless they are mounted with the diaphragm vertical. (Special units can be furnished for other than vertical mounting arrangements if required.)
3. Connect switch to source of pressure, vacuum or differential pressure. Metal tubing with ¼" O.D. is recommended, but any tubing which will not restrict the air flow can be used. Connect to the two ¼" NPT female pressure ports as noted below:
   A. Differential pressures - connect pipes or tubes from source of greater pressure to high pressure port marked HIGH PRESS. and from source of lower pressure to low pressure port marked LOW PRESS.
   B. Pressure only (above atmospheric) - connect tube from source of pressure to high pressure port. The low pressure port is left open to atmosphere.
   C. Vacuum only (below atmospheric pressure) - connect tube from source of vacuum to low pressure port. The high pressure port is left open to atmosphere.
4. To make electrical connections, remove the three hex head screws from the cover and, after loosening the fourth captive screw, swing the cover aside. Electrical connections to the standard single pole, double throw snap switch are provided by means of screw terminals marked "common", "norm open", and "norm closed". The normally open contacts close and the normally closed contacts open when pressure increases beyond the set point. Switch loads for standard models should not exceed the maximum specified current rating of 15 amps resistive. Remember that switch capabilities decrease with an increase in ambient temperature, load inductance, or cycling rate. Whenever an application involves one or more of these factors, the user may find it desirable to limit the switched current to 10 amps or less in the interest of prolonging switch life.

ADJUSTMENT

To change the set point:

A. Remove the plastic cap and turn the slotted Adjustment Screw at the top of the housing clockwise to raise the set point pressure and counter-clockwise to lower the set point. After calibration, replace the plastic cap.

B. The recommended procedure for calibrating or checking calibration is to use a "T" assembly with three rubber tubing leads, all as short as possible and the entire assembly offering minimum flow restriction. Run one lead to the pressure switch, another to a manometer of known accuracy and appropriate range, and apply pressure through the third tube. Make final approach to the set point very slowly. Note that manometer and pressure switch will have different response times due to different internal volumes, lengths of tubing, fluid drainage, etc. Be certain the switch is checked in the position it will assume in use, i.e. with diaphragm in a vertical plane and switch lettering and Dwyer nameplate in an upright position.

C. For highly critical applications it is a good idea to check the set point adjustment and reset it as necessary once or twice in the first few months of operation. This will compensate for any change in initial tension which may occur in the spring and diaphragm. For most applications this change will not be significant and no resetting will be required.

MAINTENANCE

The moving parts of these switches need no maintenance or lubrication. The only adjustment is that of the set point. Care should be taken to keep the switch reasonably clean. Periodically the vent drain plug should be rotated one turn clockwise then returned to its original position. This will dislodge deposits which could accumulate in applications where there is excessive condensation within the switch.

Litho in U.S.A.

DWYER INSTRUMENTS, INC.
P.O. Box 373, Michigan City, Indiana 46360, U.S.A.
Phone: 219/879-8000 Telex: 25916 Fax: 219/872-9057

SUPER SINGLE® Pump Switch

A dependable mercury float switch designed to provide automatic pump control.

Model SSD or SSU

ADVANTAGE

- Patented tumbler assembly gives positive pump on and off.
- Easy installation, no control panel needed.
- Special stranding insures flexible cable.
- ENTIRE unit UL Listed for water and sewage and CSA Certified.
- **TWO-YEAR LIMITED WARRANTY.**
- U.S. PATENT NO. 4,302,641

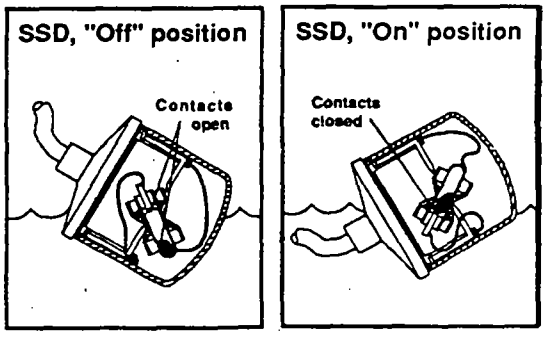

APPLICATIONS

The Super Single® pump switch will directly control pumps up to 1HP (120V) or 2HP (230V). This pump switch utilizes a heavy-duty, mercury-to-mercury tilt switch (two pools of mercury make and break electrical contact) positioned in a tumbler. This patented on-off tumbler is not sensitive to rotation.

The Super Single® pump switch provides automatic pump operation when controlling lift pumps, sump pumps, solenoids, relays, and alarms in water and sewage systems.

SPECIFICATIONS

CORD: Flexible 14 gauge, 2 conductor SJOW-A (UL), SJOW (CSA) water-resistant, special stranding, Neoprene.

FLOAT: 3.38 inch (8.57cm) diameter x 4.25 inch (10.80cm) long, thick-wall, high impact resistant, non-corrosive PVC plastic for use in liquids up to 140°F (60°C).

ELECTRICAL:

Voltage 60Hz, Single Phase	Maximum Pump Running Current	Maximum Pump Starting Current	Recommended Pump HP
120 VAC	15 amps	55	1 HP or less
230 VAC	15 amps	35	2 HP or less

NOTE: This pump switch should be used only with pumps equipped with integral thermal overload protection. One Super Single control may be wired to operate relay control panels for larger pump applications.

MODEL DEFINITION:

15	SS	D or U	1 or 2	WP or WOP
Cord Length (FT) Available 10, 15, 20, 30	SUPER SINGLE	Pump Down or Pump Up	120 Volt or 230 Volt	With or Without Piggy-Back Plug

NOTE: Model WOP (for direct wiring) may be used in either 120V or 230V applications when within amp ratings.

SUPER SINGLE® Installation Instructions

Figure A

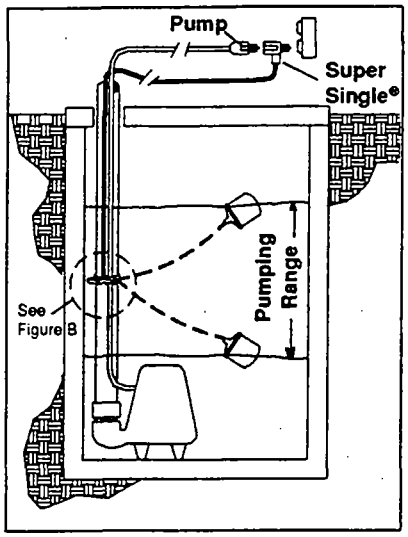

Figure B

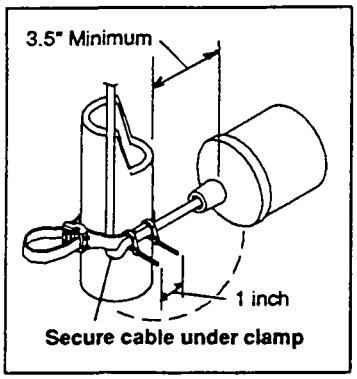

Figure C

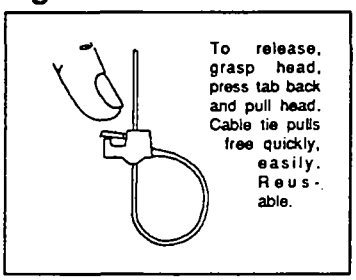

PUMPING RANGE GUIDE*

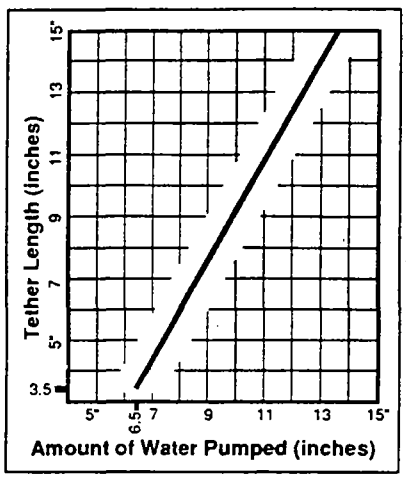

*The graph above is based on testing in non-turbulent conditions. USE ONLY AS A GUIDE. The black line represents average values; the gray area represents variance.

Figure D

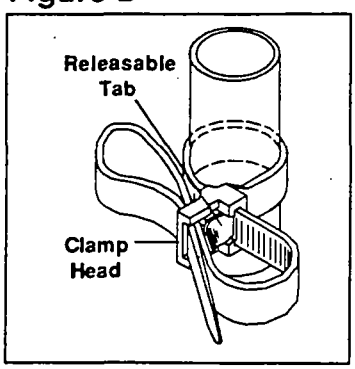

Figure E

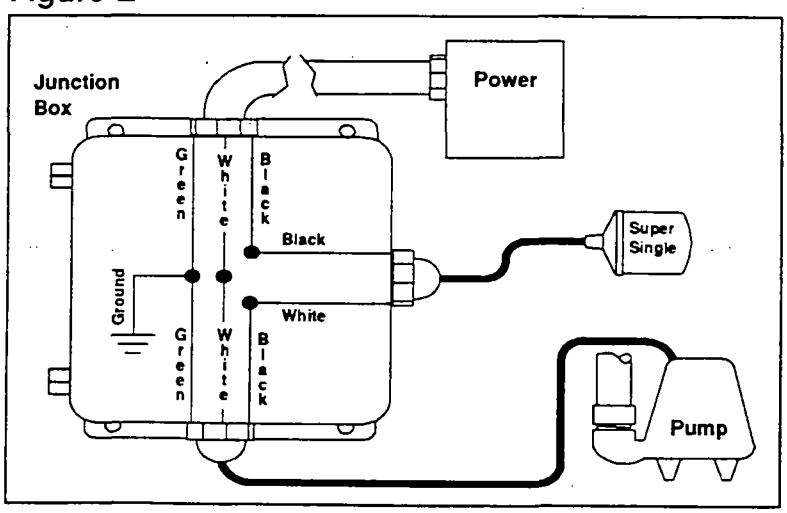

WARNING: Turn off power source before installing or adjusting this device. Failure to turn off power could result in serious or fatal electrical shock.

1. Read these instructions carefully.
2. Check your local codes before installing. We recommend this product be installed in accordance with national and local electrical codes.
3. Do not connect this product while you are standing on a wet or damp surface.
4. Do not remove cord label from switch unit.
5. Retain these instructions with warranty card when installation is complete.

MODELS: SSD & SSU

MOUNTING FLOAT

1. Decide the pumping range for your installation See Figure A and Pumping Range Guide. Pumping range is determined by the cable length from the mounting strap to the float. See Figure B.
2. Tighten the pipe clamp around the discharge pipe keeping the float cable between the clamp and pipe to help prevent slippage. The distance from the discharge pipe to the float must be a minimum of 3.5 inches. Space the small clamps approximately one inch apart. See Figure B. All clamps are releasable which permits readjustment. See Figure C. Lock the releasable tab of the pipe clamp by running the remaining strap between the releasable tab and head, pulling tightly. Tuck the strap back through the head for a neat appearance. See Figure D.

PIGGY-BACK PLUG INSTALLATION

1. Insert 120V piggy-back plug into 120V outlet or 230V piggy-back plug into 230V outlet. To avoid electrical hazards, electrical outlet must not be located in pump chamber.
2. Plug pump into piggy-back plug.

DIRECT WIRE INSTALLATION

NOTE: Piggy-back plug may be removed for direct wire option. See Figure E.

Check your installation. Allow pump to cycle once to insure proper pump range.

WARNING

In a 230V pump installation, one side of the line going to the pump is always "hot". This condition exists regardless of whether the float switch is on or off.

WP INSTALLATIONS - Remove piggy-back plug from receptacle BEFORE installing or servicing pump and/or switch.

WOP INSTALLATIONS - To avoid hazards when installing or servicing, install a double pole disconnect near pump installation.

S.J. ELECTRO SYSTEMS, INC.

Built with Pride - Employee Owned

PO Box 1619 County Rd 6 Detroit Lakes, MN 56502

Telephone: 218-847-1317 FAX: 218-847-4617

© S.J. ELECTRO SYSTEMS, INC.

Catalog Pg. 1001664B

Installation Instr. 1001540C

Printed in USA

Quality design and construction features

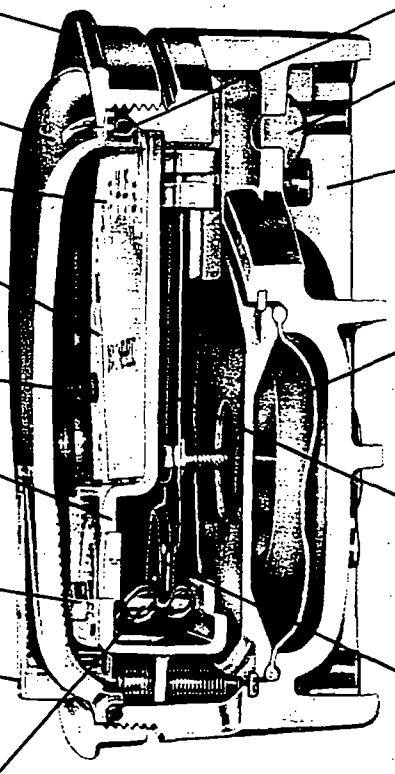

Bezel provides flange for flush mounting in panel.

Clear plastic face is highly resistant to breakage. Provides undistorted viewing of pointer and scale.

Precision litho-printed scale is accurate and easy to read.

Red tipped pointer of heat treated aluminum tubing is easy to see. It is rigidly mounted on helix shaft.

Pointer stops of molded rubber prevent pointer over-travel without damage.

"Wishbone" assembly provides mounting for helix, helix bearings and pointer shaft.

Sapphire bearings are shock-resistant mounted; provide virtually friction-free motion for helix. Motion damped with high viscosity silicone fluid.

Zero adjustment screw is conveniently located in plastic cover, accessible without removing cover. "O" ring seal provides pressure tightness.

"O" ring seal for cover assures pressure integrity of case.

Blowout plug of silicone rubber protects against overpressure on 15 PSIG rated models. Opens at approximately 25 PSIG.

Die cast aluminum case is precision made. Iridite-dipped to withstand 168 hour salt spra test. Exterior finished in baked dark gray hammerloid. One case size used for all standard pressure ranges, and for both surface and flush mounting.

Silicone rubber diaphragm with integrally molded "O" ring is supported by front and rear plates. It is locked and sealed in positio with a sealing plate and retaining ring. Diaphragm motion is restricted to prevent damage due to overpressures.

Calibrated range spring is a flat leaf of Swedish spring steel in temperature compensated design. Small amplitude of motion assures consistency and long life. It reacts t pressure on diaphragm. Live length adjustable for calibration.

Alnico magnet mounted at one end of range spring rotates helix without mechanical linkages.

Helix is precision milled from an alloy of high magnetic permeability, deburred and annealed in a hydrogen atmosphere for best magnetic qualities. Mounted in jeweled bearings, it turns freely to align with magnetic field of magnet to transmit pressure indication to pointer.

SERIES 2000 MAGNEHELIC® – MODELS AND RANGES

The models below will fulfill most requirements. Page 5 also shows examples of special models built for OEM customers. For special scales furnished in ounces per square inch, inches of mercury, metric units, etc., contact the factory.

Model Number	Range, Inches of Water	Minor Div.
2000-00†	0- .25	.005
2000-0†	0- .50	.01
2001	0-1.0	.02
2002	0-2.0	.05
2003	0-3.0	.10
2004	0-4.0	.10
2005	0-5.0	.10
2006	0-6.0	.20
2008	0-8.0	.20
2010	0-10	.20
2015	0-15	.50
2020	0-20	.50
2025	0-25	.50
2030	0-30	1.0
2040	0-40	1.0
2050	0-50	1.0
2060	0-60	2.0
2080	0-80	2.0
2100	0-100	2.0
2150	0-150	5.0

Model Number	Range, Zero Center Inches of Water	Minor Div.
2300-0†	.25-0-.25	.01
2301	.5-0-.5	.02
2302	1-0-1	.05
2304	2-0-2	.10
2310	5-0-5	.20
2320	10-0-10	.50
2330	15-0-15	1.0

Model Number	Range, PSI	Minor Div.
2201	0-1	.02
2202	0-2	.05
2203	0-3	.10
2204	0-4	.10
2205	0-5	.10
2210*	0-10	.20
2215*	0-15	.50
2220*	0-20	.50
2230**	0-30	1.0

*MP option standard
**HP option standard

Dual Scale Air Velocity Units

Model Number	Range, Inches of Water	Range, Air Velocity F.P.M.
2000-00AV†	0- .25	300- 2000
2000-0AV†	0- .50	500- 2800
2001AV	0-1.0	500- 4000
2002AV	0-2.0	1000- 5600
2010AV	0-10	2000-12500

For use with pitot tube.

Model Number	Range, MM of Water	Minor Div.
2000-6MM†	0-6	.20
2000-10MM†	0-10	.20
2000-25MM	0-25	.50
2000-50MM	0-50	1.0
2000-80MM	0-80	2.0
2000-100MM	0-100	2.0
Zero Center Range		
2300-20MM†	10-0-10	.50

Model Number	Range, CM of Water	Minor Div.
2000-15CM	0-15	.50
2000-20CM	0-20	.50
2000-25CM	0-25	.50
2000-50CM	0-50	1.0
2000-80CM	0-80	2.0
2000-100CM	0-100	2.0
2000-150CM	0-150	5.0
2000-200CM	0-200	5.0
2000-250CM	0-250	5.0
2000-300CM	0-300	10.0
Zero Center Ranges		
2300-4CM	2-0-2	.10
2300-10CM	5-0-5	.20
2300-30CM	15-0-15	1.0

†These ranges calibrated for vertical scale position.

Model Number	Range, Pascals	Minor Div.
2000-60 Pa†	0-60	2.0
2000-125 Pa†	0-125	5.0
2000-250 Pa	0-250	5.0
2000-500 Pa	0-500	10.0
2000-750 Pa	0-750	25.0
Zero Center Ranges		
2300-250 Pa	125-0-125	5.0
2300-500 Pa	250-0-250	10.0

Model Number	Range, Kilopascals	Minor Div.
2000-1 kPa	0-1	.02
2000-1.5 kPa	0-1.5	.05
2000-2 kPa	0-2	.05
2000-3 kPa	0-3	.10
2000-4 kPa	0-4	.10
2000-5 kPa	0-5	.10
2000-8 kPa	0-8	.20
2000-10 kPa	0-10	.20
2000-15 kPa	0-15	.50
2000-20 kPa	0-20	.50
2000-25 kPa	0-25	.50
2000-30 kPa	0-30	1.0
Zero Center Ranges		
2300-1 kPa	-.5-0-.5	.02
2300-3 kPa	-1.5-0-1.5	.10

Suggested Specifications

A differential pressure gage for measuring (state purpose) shall be installed. Gage shall be the diaphragm-actuated dial type 4⅜" O.D., with white dial, black figures and graduations and pointer zero adjustment. Gage shall be Dwyer Instruments, Inc., Magnehelic®, Catalog No. _____ reading to _____" water column, in _____" divisions.

Special Purpose Ranges

Scale No. 2401	Scale No. 2402
Square Root	Blank Scale
Specify Range	Specify Range

Model 2000-00N, Range – .05 to +.20" W.C. For room pressure monitoring.

Dwyer SERIES 2000 Magnehelic® Differential Pressure Gages

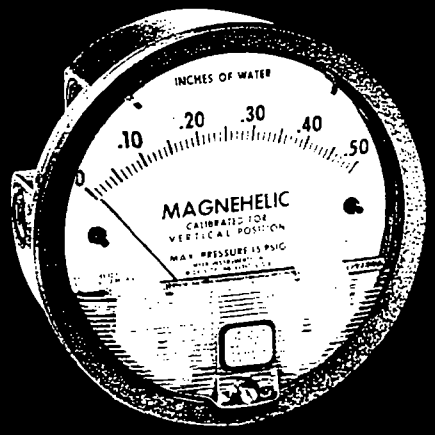

Standard Magnehelic® Pressure Gage has a large, easy-to-read 4" dial.

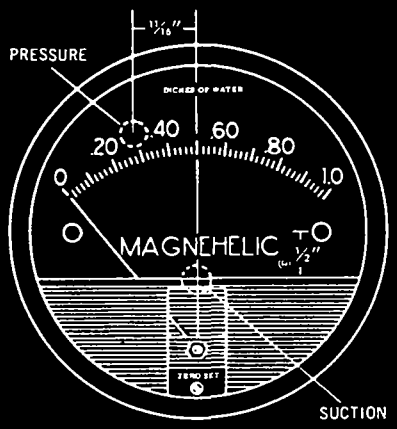

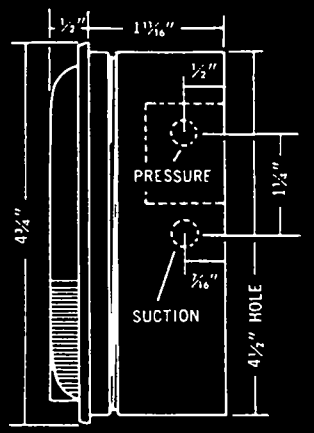

Dimensions, Standard Series 2000 Magnehelic® Pressure Gages. (Slightly different on medium and high pressure models)

Select the Dwyer Magnehelic® gage for high accuracy – guaranteed within 2% of full scale – and for the wide choice of 81 ranges available to suit your needs precisely. Using Dwyer's simple, frictionless Magnehelic® movement, it quickly indicates low air or non-corrosive gas pressures – either positive, negative (vacuum) or differential. The design resists shock, vibration and over-pressures. No manometer fluid to evaporate, freeze or cause toxic or leveling problems. It's inexpensive, too.

Widely used to measure fan and blower pressures, filter resistance, air velocity, furnace draft, pressure drop across orifice plates, liquid levels with bubbler systems and pressures in fluid amplifier or fluidic systems. It also checks gas-air ratio controls and automatic valves, and monitors blood and respiratory pressures in medical care equipment.

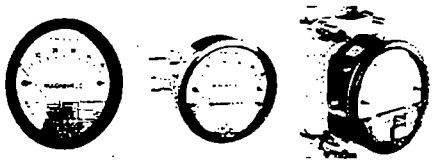

Flush...Surface...or Pipe Mounted

Mounting. A single case size is used for most ranges of Magnehelic gages. They can be flush or surface mounted with standard hardware supplied. With the optional A-610 Pipe Mounting Kit they may be conveniently installed on horizontal or vertical 1¼"-2" pipe. Although calibrated for vertical position, many ranges above 1 inch may be used at any angle by simply re-zeroing. However, for maximum accuracy, they must be calibrated in the same position in which they are used. These characteristics make Magnehelic gages ideal for both stationary and portable applications. A 4½" hole is required for flush panel mounting. Complete mounting and connection fittings plus instructions are furnished with each instrument.

Vent valves

In applications where pressure is continuous and the Magnehelic gage is connected by metal or plastic tubing which cannot be easily removed, we suggest using Dwyer A-310A vent valves to connect gage. Pressure can then be removed to check or re-zero the gage.

HIGH AND MEDIUM PRESSURE MODELS

Installation is similar to standard gages except that a 4¾" hole is needed for flush mounting. The medium pressure construction is rated for internal pressures up to 35 psig and the high pressure up to 80 psig. Available in all ranges. Because of larger case, will not fit in portable case. Weight 1 lb., 10 oz. (Installation of the A-321 safety relief valve on standard Magnehelic gages often provides adequate protection against infrequent overpressure; see Bulletin S-101).

PHYSICAL DATA

Ambient temperature range: 20° to 140° F.*

Rated total pressure: –20" Hg. to 15 psig.†

Overpressure: Relief plug designed to open at 25 psig.

Connections: ⅛" NPT female high and low pressure tap duplicated – one pair side and one pair back.

Housing: Die cast aluminum. Case and aluminum parts Iridite-dipped to withstand 168 hour salt spray test. Exterior finish is baked dark gray hammerloid.

Accuracy: Plus or minus 2% of full scale (3% on –0 and 4% on –00 ranges), throughout range at 70°F.

Standard accessories: Two ⅛" NPT plugs for duplicate pressure taps, two ⅛" pipe thread to rubber tubing adapters, and three flush mounting adapters with screws. (Mounting ring and snap ring retainer substituted for 3 adapters in MP & HP gage accessories.)

Weight: 1 lb. 2 oz.

*Low temperature models available as special option.
†For applications with high cycle rate within gage total pressure rating, next higher rating is recommended. See Medium and High pressure options at lower left.

OPTIONS AND ACCESSORIES

Transparent overlays
Furnished in red and green to highlight and emphasize critical pressures.

Adjustable signal flag
Integral with plastic gage cover; has external reset screw. Available for all ranges (not high pressure). Can be ordered with gage or separately.

Portable units
Combine carrying case with any Magnehelic gage of standard range (not high pressure). Includes 9 ft. of ⅜" I.D. rubber tubing, stand-hang bracket, and terminal tube with holder.

Air filter gage accessory package
Adapts any standard Magnehelic for use as an air filter gage. Includes aluminum surface-mounting bracket with screws, two 5 ft. lengths of ¼" aluminum tubing, two static pressure tips and two molded plastic vent valves, integral compression fittings on both tips and valves.

NOTE:

The following is a collection of the ShallowTray's components manufacturer's cut-sheets.
Not all of the following may pertain to your unit, depending on the options you have selected.
Refer to the Components list, found in section 1, for the options that are on your unit.

AMERICAN FAN COMPANY ®

2933 SYMMES ROAD, FAIRFIELD, OHIO 45014
PHONE: (513) 874-2400 FAX: (513) 870-5577

AMERICAN FAN CO. INSTALLATION, OPERATION, AND MAINTENANCE MANUAL SM 844

This general manual has been prepared to assist you in installing and maintaining your American Fan equipment. By following the general instructions presented, you will prolong the life of the equipment, while preventing unexpected downtime.

The scope of this manual covers our standard product line and is not intended to cover specially engineered equipment.

INDEX

	Page No.
Section I	
Receiving	2
Extended Storage	2
Handling	2
Installation	2
Section II	
Before Start-Up	3
Start-Up	3
Start-Up Of High Temperature Construction Fans & Blowers	3
Section III	
General Maintenance	4
Fan Bearing Maintenance	4
Motor Maintenance	5
V-Belt Drive Maintenance	5
Section IV	
Problem Troubleshooting	6
Ordering Spare Parts	6
Section V	
Warranty	7

amca MEMBER

DESIGNERS / MANUFACTURERS OF HIGH EFFICIENCY
INDUSTRIAL FANS / BLOWERS / DUST COLLECTORS

SECTION I

RECEIVING

All shipments are F.O.B. factory, Fairfield, Ohio. It is, therefore, in the interest of the buyer to carefully inspect all shipments before they are accepted from the freight carrier. Upon delivery, be sure that all items listed on the bill of lading and packing list (inserted in the plastic envelope attached to the shipment) have been received. Partial shipments are sometimes made.

Units are usually completely assembled except when specifications call for unit less motor. They are then skidded, boxed or crated to fully comply with rail or trucking requirements for shipment.

Accessories are sometimes shipped separately due to handling and space requirements.

Even though all equipment is carefully inspected and prepared for shipment at the factory, rough handling enroute may cause damage to fan and/or drive parts.

Any shortage, breakage or damage noticed at time of delivery should be indicated to the carrier's representative. Damage noticed after delivery should be reported to the carrier at once. Request their inspection of the shipment and fill out a concealed damage inspection report.

EXTENDED STORAGE

Units shipped to customer which will be held in storage for a period of up to two years should have special provisions so operation-readiness can be maintained. Motors should be equipped with internal space heaters kept on continuously. Units should be crated and covered with polyethylene film. In addition, impellers should be hand-rotated once a month. For best results, keep units sheltered in a cool, dry location.

HANDLING

Small units should be handled carefully and lifted only by the base, never by the shaft, coupling, motor or housing. Larger units should also be lifted by the base or by lifting eyes, if provided. Precaution should be taken to avoid dropping or jarring equipment as this can cause damage to the shaft or wheel which is not visibly noticeable, but can cause vibration problems.

INSTALLATION

Fans and motors should be mounted on structurally sound foundations. Concrete is the best, however, other types designed properly are acceptable. Equipment should be leveled on the foundation and be shimmed or grouted in place. This will prevent putting the fan structure into a bind by bolting down on an uneven surface.

As a general rule, if vibration isolators are used, the fan should first be bolted to a structural steel base and the isolation take place between the structural steel base and the foundation. This prevents the fan base from "floating" due to uneven weight distribution and/or drive forces when mounted directly to vibration isolators.

SECTION II

BEFORE START-UP

1. Fasteners - all foundation bolts, wheel hub set screws, wheel locking bolts and bearing locking collars must be tight.
2. Bearings - check bearing alignment and make certain they are properly lubricated.
3. Fan Wheel - turn over rotating assembly by hand to see that it runs free and does not bind or strike fan housing. If wheel strikes housing, the wheel may have to be moved on the shaft or the bearing pillow blocks moved and reshimmed.
4. Motor - check electrical wiring to motor. The current characteristics of the supply line must agree with the motor nameplate rating. Motor should be wired and fused in accordance with the National Electric Code and local codes.
5. V-belt drive must be in alignment with belts at proper tension.
6. Duct Connections (if required) from fan to duct work must not be distorted. Ducts should never be supported by the fan. Expansion joints between duct connections should be used where expansion is likely to occur or where fan is mounted on vibration isolators. All duct joints should be sealed to prevent air leaks. All debris should be removed from ductwork and fan.

START UP

1. "Jog" the motor to check for proper wheel rotation. The motor should be started in accordance with the manufacturer's recommendations. Arrows on fan indicate the proper direction of rotation and air flow.
2. Fan may now be brought up to speed. Watch for anything unusual such as vibration, overheating of bearings and motors, etc. Check fan speed on V-belt driven units and adjust motor sheave (on adjustable drives) to give desired RPM.
3. Check motor amperage against nameplate amperage to make sure motor is not overloading.

START-UP OF HIGH TEMPERATURE CONSTRUCTION FANS AND BLOWERS

In addition to normal start-up procedure described above, certain measures must be taken against thermal expansion deformation.

1. Fan or blower should be brought to speed between 50°F and 120°F. It may be necessary to throttle back air entering fan or blower and slowly bleeding in heated air to accomplish this. (Note: if motor horsepower is sized for high temperature operating condition and not cold start-up, throttling inlet air will be mandatory to prevent motor overloading. It is recommended motor amperage be monitored during this procedure.)
2. The maximum rate of temperature rise allowable is 15°F per minute.
3. The reverse situation of fan or blower shut-off also applies. That is, the temperature must be lowered slowly before turning fan or blower off to prevent damage.

SECTION III

GENERAL MAINTENANCE

1. A definite time schedule for inspecting all rotating parts and accessories should be established. The frequency of inspection depends on the severity of operation and the locality. Inspections might be weekly at first in order to set up the schedule.
2. Alignment - shaft must not be cocked in the bearings. Misalignment can cause overheating, wear to dust seals, bearing failure and unbalance.
3. Hardware - check tightness of all bolts and set screws.
4. Lubrication - check fan and motor bearings and add lubricant if necessary. Be careful not to overgrease as this can damage bearing seals.
5. Air flow - make sure there are no obstructions to air flow in outlet or inlet ductwork.
6. Bearings on high speed fans tend to run hot. Therefore, do not replace a bearing because it feels hot to the touch. Place a pyrometer or contact thermometer against the pillow block and check the temperature.

   Ball pillow blocks can have total running temperatures of 165°F (74°C) before the cause of overheating be investigated.
7. Wheel - inspect wheel blades for accumulation of dust and dirt. Clean thoroughly with stream of water jet, compressed air or a wire brush. This will help prevent an unbalanced condition. If blades are aluminum, be careful not to damage them. Cover the bearings so water won't enter the pillow block. The wheel should be centered to prevent the blades from striking the housing. Make sure wheel is rotating in proper direction. Never run the fan at a higher speed than it was designed for unless you check with American Fan first.

FAN BEARING MAINTENANCE

For most applications, a lithium base grease conforming to a NLGI grade 2 consistency should be used. This type of grease inhibits rust, is water resistant, and has a temperature range of -30°F to 200°F with intermittent highs of 250°F.

Because oil lubricated bearings are usually used on high-speed or high-temperature applications, refer to American Fan for the type of oil you should use in your particular application.

When greasing bearings it is important not to overgrease. This is especially true if the bearings are equipped with extended grease lines and the bearings are not visible. In this case, more bearing failures occur due to overgreasing than undergreasing. It is best to give the bearing just one "shot" of grease periodically, when the bearings are not visible. When the bearings are visible, pump in grease until a small bead of grease forms around the bearing seals. It is very important that fan bearing greasing take place while the fan is operating. Caution should be taken while working on and near rotating equipment to avoid personal injury.

When oiling oil-lubricated bearings, oil should be poured into cup at top of bearing until it reaches the overflow point at the lower oil cup.

MOTOR MAINTENANCE

Lubricate motor bearings to the manufacturer's recommendations. Lubrication recommendations are printed on tags attached to the motor. Should these tags be missing, the following will apply:

A. Fractional Horsepower Sleeve Bearing Motors:
Under normal operation at ordinary temperatures and clean surroundings, these motors will operate for three years without relubrication. Then lubricate annually with electric motor oil or SAE 10 oil. Under continuous operation at higher temperatures (but not to exceed 104°F ambient) relubricate annually.

B. Fractional Horsepower Ball Bearing Motors:
Under normal conditions, ball bearing motors will operate for five years without relubrication. Under continuous operation at higher temperatures (but not to exceed 104°F ambient) relubricate after one year. To relubricate where motors are not equipped with pressure fittings, disassemble motor and clean the bearings thoroughly. Repack each bearing one-third full with ball bearing grease.

C. Integral Horsepower Ball Bearing Motors:
Motors having pipe plugs or grease fittings should be relubricated while warm and at stand-still. Replace one pipe plug on each end shield with grease fitting. Remove other plug for grease relief. On low pressure, grease, run and lubricate until new grease appears at grease relief. Allow motor to run for ten minutes to expel excess grease. Replace pipe plugs. Motors not having pipe plugs or grease fittings can be relubricated by removing end shields, cleaning grease cavity and refilling three-fourths of circumference of cavity.

Recommended relubrication intervals-general guide only.

H.P. Range	Standard Duty 8 Hr./Day	Severe Duty 24 Hr./Day Dirty-Dusty	Extreme Duty Very Dirty High Ambients
1½-7½	5 Yrs.	3 Yrs.	9 Mos.
10-40	3 Yrs.	1 Yrs.	4 Mos.
50-150	1 Yrs.	9 Mos.	4 Mos.

These ball bearing greases or their equivalents are satisfactory for ambients from -15°F. For Motors:

Mobilplex EP#1—Socony Mobil Oil Company
Alvania Grease #2—Shell Oil Company
Andox B Grease—Esso Standard Oil Company
Prestige #42 Grease—Sun Oil Company

V-BELT DRIVE MAINTENANCE

If belts squeal at start-up, they are too loose and should be tightened. Periodically, check belt and sheave wear, alignment, and tension. When belts show wear, replace all belts at once with a new matched set of belts. New belts will not work properly in conjunction with used belts due to difference in length. Belts and sheaves should be clean and free from grease. After installing new belts, check tension midway between sheaves. Belts should deflect about 1/64" per inch of span length with approx. 20 lb. force. Allow unit to run for 4-6 hours, then it will be necessary to re-tighten belts again because new belts tend to stretch initially.

SECTION IV

PROBLEM TROUBLESHOOTING

In the event that trouble is experienced in the field, listed below are the most common fan difficulties. These points should be checked in order to prevent needless delay and expense of factory service.

1. CAPACITY OR PRESSURE RATING
   - A. Total resistance of system higher than anticipated.
   - B. Speed too low.
   - C. Dampers or variable inlet vanes not properly adjusted.
   - D. Poor fan inlet or outlet conditions.
   - E. Air leaks in system.
   - F. Damaged wheel.
   - G. Incorrect direction of rotation.
   - H. Wheel mounted backwards on shaft.

2. VIBRATION & NOISE
   - A. Misalignment of bearings, couplings, wheel, or V-belt drive.
   - B. Unstable foundation, fan bolted to uneven foundation, not shimmed or grouted.
   - C. Foreign material in fan causing unbalance.
   - D. Worn bearings.
   - E. Damaged wheel or motor.
   - F. Broken or loose bolts and set screws.
   - G. Bent shaft.
   - H. Worn coupling.
   - I. Fan wheel or driver unbalanced.
   - J. 120 cycle magnetic hum due to electrical input. Check for high or unbalanced voltage.
   - K. Fan delivering more than rated capacity.
   - L. Loose dampers or variable inlet vanes.
   - M. Speed too high or fan rotation in wrong direction.
   - N. Vibration transmitted to fan from some other source.

3. OVERHEATED BEARINGS
   - A. Too much grease.
   - B. Poor alignment.
   - C. Damaged wheel or driver.
   - D. Bent shaft.
   - E. Abnormal end thrust.
   - F. Dirt in bearings.
   - G. Excessive belt tension.

ORDERING SPARE PARTS

Contact the local American Fan representative or the factory and supply the following information:

1. Fan serial number stamped on nameplate.
2. Fan code and model stamped on nameplate.
3. Fan arrangement.
4. Description of part required.
5. Part number if part is a casting.
6. Special paints or coatings.

WHEEL—Be sure to indicate direction of rotation as viewed from drive side, type of wheel and the operating speed.

SHAFT—Length and diameter.

MOTORS—The name of the motor manufacturer and the motor model number from the motor nameplate must be supplied to the factory for repairs or replacement.

BEARINGS—The following information should be indicated when ordering various types of bearings:

ANTI-FRICTION BEARINGS
1. State whether ball or roller.
2. Manufacturer
3. Size and number
4. Fixed or floating

RECOMMENDED SPARES:
1. V-belts on V-belt driven fans
2. Fan bearings
3. Wheel (s)
4. Motor (if blower is critical to your operation.)

SECTION V

AMERICAN FAN COMPANY WARRANTY

1) "The Seller hereby warrants the equipment to be free from defects in materials and workmanship under normal use and service, the obligations hereunder being limited to making good at Seller's plant F.O.B. any part or parts thereof manufactured by Seller which shall within twelve (12) months from the date of shipment to the original purchaser be returned to Seller with transportation charges prepaid and which on examination by Seller shall disclose to Seller's satisfaction defects. This warranty shall be the only warranty by Seller covering this equipment or the parts thereof and shall be in lieu of all other warranties either expressed or implied. Buyer waives all claims for defects in material and workmanship unless said claim be made in writing and received by Seller within ten (10) days after the discovery thereof. This warranty shall cover only the cost of correcting defects in the equipment or parts thereof and Seller shall not be responsible for damages either proximate or consequential arising out of use, operation or possesion of said equipment or the parts thereof by Buyer or any other parties. The Seller shall not be responsible for work done, equipment or parts furnished or repairs made by others, for any loss or expense arising from such work, equipment parts or other repairs unless the same is done or furnished with the prior written consent and approval of the Seller. Seller shall under no circumstances be liable for the cost of raw materials used or lost in testing or experimental operations of any equipment sold or other such testing or experimentation to be done under the supervision of a representative of the Seller or of any employee or other representative of the Buyer."

2) Warranties on purchased material are limited to terms of warranty furnished by our suppliers.

3) We do not guarantee against abrasion, corrosion or erosion.

Form 3628

Centrifugal Pump, Type R5 1", R5 1-1/4", & R6 1-1/4"
Installation, Operation and Maintenance Instructions

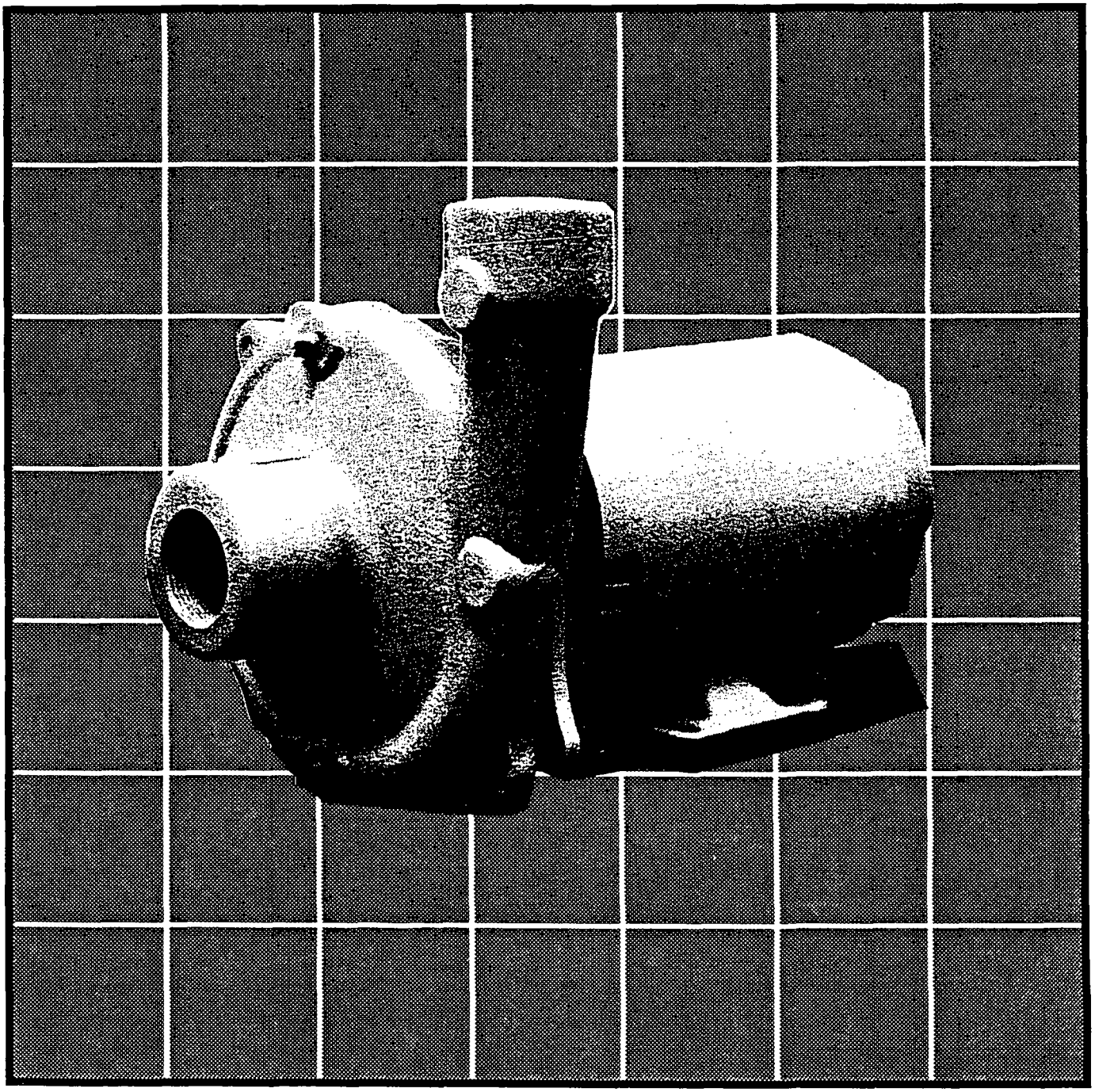

DUNHAM-BUSH®
DUNHAM DIVISION

NOMENCLATURE

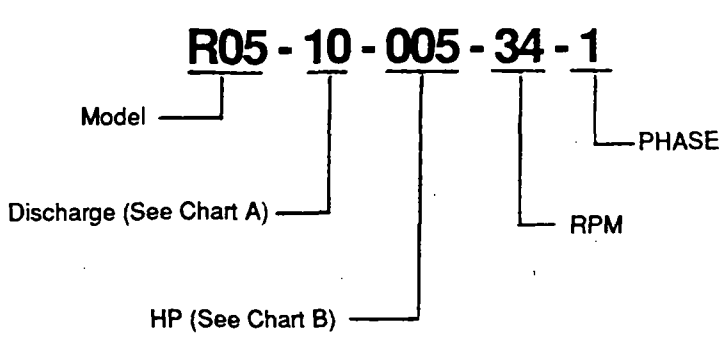

CHART A
10 = 1"
12 = 1-1/4"
15 = 1-1/2"
20 = 2"

CHART B
003 = 1/3 HP
005 = 1/2 HP
007 = 3/4 HP
010 = 1 HP
015 = 1-1/2 HP
020 = 2 HP
030 = 3 HP

ORDERING PROCEDURE

1) Complete part number and description is required when ordering.

2) When a part number is not known or shown in the parts catalog, the complete model and serial number of the unit on which the part is to be used must be given.

3) Send all orders to: Dunham-Bush, Inc., Dunham Division Parts Department,

   P.O. Box 498, 811 E. Main Street, Marshalltown, IA 50158, FAX: (515) 753-0496 or TELE: (515) 752-4291

4) Prices can be found in the latest revision of Form 17448 and are for one item or kit as applicable.

5) Minimum billing is $50.00.

6) All prices are subject to federal, state, local or other taxes which may be applicable.

7) When order requires special handling (emergency order) contact factory for rate and delivery.

8) Dunham-Bush reserves the right to substitute parts if they are interchangeable with those ordered. The invoice will reflect the cost of the actual part shipped.

9) Refer to the latest revision of Form 1278 (located on back of price sheet) for terms of sale.

INTRODUCTION

The Dunham-Bush Type R5 and R6 are radially split, single stage, motor mounted centrifugal pumps. These pumps are supplied with an end face mechanical shaft seal installed, which is especially selected for reliability and life on the particular pump application. All pumps are supplied as complete units including motor.

SECTION 1 - PUMP INSTALLATION

A) LOCATION

1. For satisfactory operation of any centrifugal pump it is necessary that adequate "Net Positive Suction Head" (NPSH) be available at the pump suction connection (NPSH is the total head in feet absolute, less the vapor pressure of the liquid in feet absolute, available to the pump). For this reason the pump should be located as close to the liquid source as possible.

2. Adequate head room should be provided for the us of installing equipment.

3. Adequate space should be allowed for inspection during pump operation.

B) FOUNDATION

1. The foundation must be solid and substantial enough to absorb mechanical vibration. In general concrete foundations are the most satisfactory and when used, bolts should be supplied which are imbedded for pump footing. Bolts should be long enough to insure proper tightening (minimum of six (6) threads

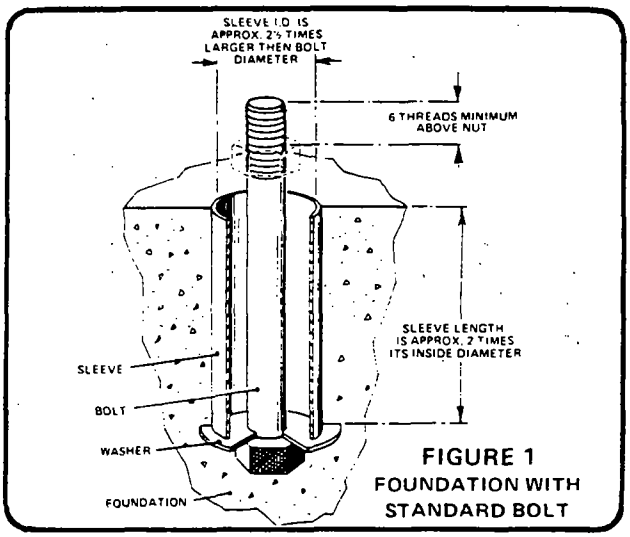

FIGURE 1
FOUNDATION WITH STANDARD BOLT

should protrude beyond nut), and it is recommended that each bolt (standard or "J" type) be fitted with a pipe sleeve that is approximately 2-1/2 times the bolt diameter of the sleeve. When using a standard bolt (figure 1) a washer should be used to support the head of the bolt in the sleeve. After the concrete foundation has been poured, the pipe sleeve remains in place allowing for alignment with the holes in the motor feet.

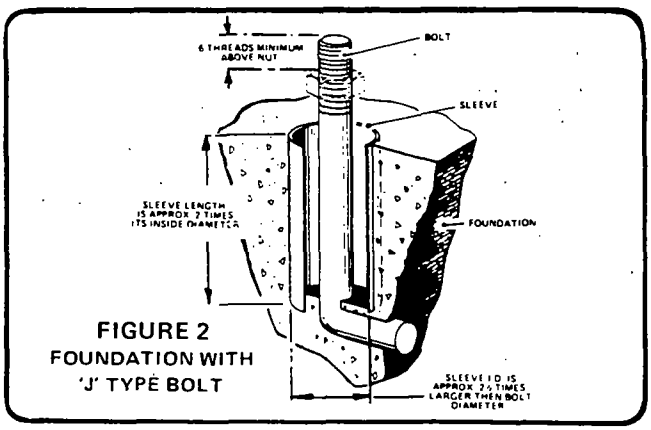

FIGURE 2
FOUNDATION WITH 'J' TYPE BOLT

2. When "J" type bolts (figure 2) are used the same procedure is used except that no washer is needed.

3. If the foundation has been laid, holes may be drilled and expansion bolts used to anchor the pump to the foundation.

C) MOUNTING PUMP - Foot Mounted

1. Uncrate the pump leaving all instructions attached and install at its' place of operation.

2. Locate the leveling plates and shims at each foundation bolt.

3. Level the motor perpendicular to shaft, shimming as necessary.

4. Level the motor parallel to shaft and tighten the nuts on the foundation bolts evenly.

C) MOUNTING PUMP - Pipe Mounted

1. Horizontal Lines - Normally the pump is mounted with the motor perpendicular to the ground with the motor end up. The piping must be adequate to support both the piping and pump.

2. Vertical Lines - The motor will be parallel to the floor and may require additional support other than that offered by the piping.

D) PIPING

1. Both suction and discharge piping should be as short and as direct as possible. There should be as few fittings and bends as possible. Bends, where used should be of the long radius variety.

2. Piping should be supported near the pump to prevent strains from being transmitted to the pump, and piping at the pump suction and discharge should be as large or larger than the openings in the pump.

3. Gate valves and pressure gauges should be installed in both the suction and discharge line to facilitate pump maintenance and performance checks.

E) SUCTION PIPING

1. Suction piping must be free of vapor trapping pockets.

2. In horizontal piping leading to the pump only eccentric-reducers should be used (see figures 3 & 4).

3. The suction pipe must be free from the expansion of hot lines.

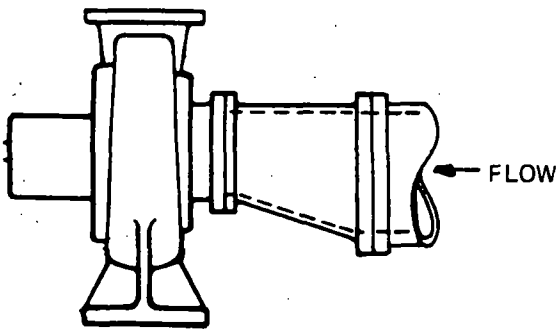

FIGURE 3
CORRECT SUCTION PIPING FOR ECCENTRIC REDUCER

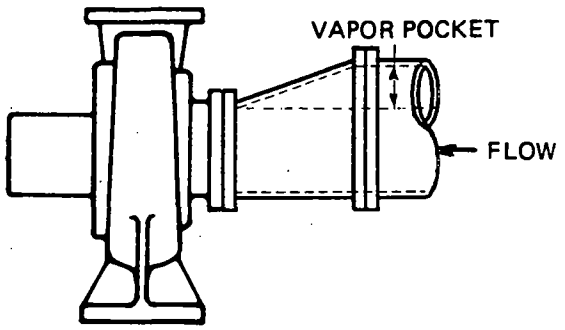

FIGURE 4
INCORRECT SUCTION PIPING FOR ECCENTRIC REDUCER

4. It is recommended that a strainer be installed near the pump suction inlet to catch scale or other foreign material. A pressure gauge installed on each side of the strainer can be used for measuring the pressure drop across the strainer.

5. If a strainer or foot valve is to be used on the inlet end of the suction line, the free area through the strainer or valve should be approximately 2-1/2 to 4 times the area of the suction pipe.

F) DISCHARGE PIPING

1. On some installations, a check valve and balancing cock in addition to a gate valve may be required in the discharge piping. The check valve would be used to prevent liquid from running back through the pump in case of failure of the motor. The balancing cock is used to control the pumps' operating capacity by providing a changeable control in the piping system. The gate valve would be used in priming, starting and shutting down the pump.

2. When valves are required in the discharge line, they should be located as near as possible to the pump.

3. In some applications when the pump may be operated with zero flow, provisions should be made for recirculating a portion of the liquid from the discharge to the suction of the pump to reduce the possibility of overheating.

G) PIPING FOR SPARE PUMPS

1. Spare pumps in high temperature service should be piped so that hot liquid from the discharge of the operating pump circulates continuously through a bypass to the spare pump and back to the suction of the operating pump. This can greatly reduce thermal shock when the spare pump is started.

H) INSTALLING PUMP

1. Make up the piping to the suction and discharge connections of the pump. All piping must be properly supported by hangers and not by the pump.

2. Wire the pump motor for the voltage required as specified on the wiring diagram located on the motor nameplate, or in cover of the motor terminal box. All wiring must be in accordance with local regulations. If the motor is damaged due to improper wiring, the guarantee is void.

SECTION 2 - PUMP OPERATION

A) Starting Pump

1. Open the suction and discharge valves to the pump. <u>These pumps have a mechanical seal and must NOT be run dry.</u> Open the cock at the top of the pump case to vent out any air.

<u>NOTE:</u> a. If the pump is above the level of the liquid to be pumped, close the discharge valve. If the pump is below the level of the liquid, open the discharge valve 1-1/2 to 2 turns.

b. Prime the pump. All air and vapor must be removed. The pump case and suction pipe must be filled with liquid before the pump is started.

2. Rotate the pump shaft by hand (if possible) to be sure the pump is not binding. On some models the end of the motor shaft has a screwdriver slot. It may be used to turn the shaft. A check for sticking of the shaft should also be made after a prolonged pump shutdown. Close discharge valve, then open slightly.

3. Start the pump and check for correct rotation according to the arrow on the case. If it is running in the wrong direction on three phase current, change any two leads to the motor. You must disconnect the power before changing the wiring.

4. Lack of capacity and head may indicate the passageways of the pump impeller have become clogged with foreign matter or that the motor speed is low. If speed of the motor is low, the wiring connections at the motor should be checked for miswiring or looseness. If the pump is wired for 460 volt current, but is actually operating on 230 volt current, the motor will never come up to proper speed and may burn out. If low voltage occurs, notify local power company. Slugging of air is another cause of low capacity and head on a closed system. Be sure the system is properly vented of all air - see further notes under Trouble Shooting - Section IV.

<u>WARNING - DO NOT ATTEMPT TO OPERATE PUMP WITH SUCTION VALVE CLOSED!</u>

5. As soon as the pump is up to full speed, slowly open the discharge valve until it is completely open. Do not let the pump run with the discharge valve closed.

6. Check the pressure gauges on each side of the strainer in the suction line. A pressure drop across the strainer indicates it is becoming clogged with dirt or scale. In this case, the pump should be shut down and the strainer screen cleaned or replaced. A clogged strainer can cause damage to the pump.

7. The pump should be shut down if motor bearings overheat, if there is undue vibration or noise, or if it fails to develop its rated discharge pressure at operating speed.

B) OPERATING AT REDUCED CAPACITY

1. If the pump is connected to a constant speed driver or motor, the capacity of the pump can be reduced by throttling the discharge. When throttling the discharge, a by-pass connection may be used to by-pass sufficient liquid back to the suction inlet to prevent overheating.

C) OPERATING ROUTINE

1. Check the bearing temperatures periodically. If there is overheating, check the motor to insure adequate lubrication. Normal inspection consists of periodic checks of motor lubrication.

2. Lubricating the pump motor should be done in accordance with manufacturer's recommendations.

3. Check all seals for leakage.

4. Check the suction and discharge pressure gauges. If the differential pressure drops critically, shut down the pump at once.

D) STOPPING

1. The pump should be shut down rapidly to keep liquid in the pump and to prevent the parts from seizing. After stopping the driver, close the discharge valve and then the inlet valve, in that order. Sometimes it is necessary to close the discharge valve immediately after stopping the driver to prevent reverse rotation. If the pumps are to remain idle under freezing conditions, precautions, such as draining the case, should be taken to avoid damage.

SECTION 3 - MAINTENANCE INSTRUCTIONS

A) R5 & R6 PUMP DISASSEMBLY AND ASSEMBLY
(Refer to Figures 5 & 6)

1. Disconnect the power to pump.

2. Close the valves in suction and discharge lines or drain the system.

3. Remove the 4 hex head screws (7), holding the adapter (2), to the case (1). Disassemble the adapter (2), from the case (1), by sliding the motor back.

4. Remove the case O-Ring (5) and clean the O-Ring surfaces on the case (1), and adapter (2).

5. Remove the plug covering the shaft end in motor.

6. Hold motor shaft from turning by using a large blade screwdriver in slot of motor shaft end and remove the impeller by turning it counter clockwise. Three phase pumps require heat on shaft to loosen.

7. Remove the adapter (2), and mechanical seal (4), from the shaft by first removing 4 hex cap screws (6), and then pulling the adapter (2), from the motor (9).

8. Remove stationary mechanical seal cup and mating ring from the adapter (2).

9. Clean the motor shaft and seal bore on adapter with solvent and inspect for scrapes, nicks and scratches. Lightly polish the shaft to remove blemishes.

continued next page

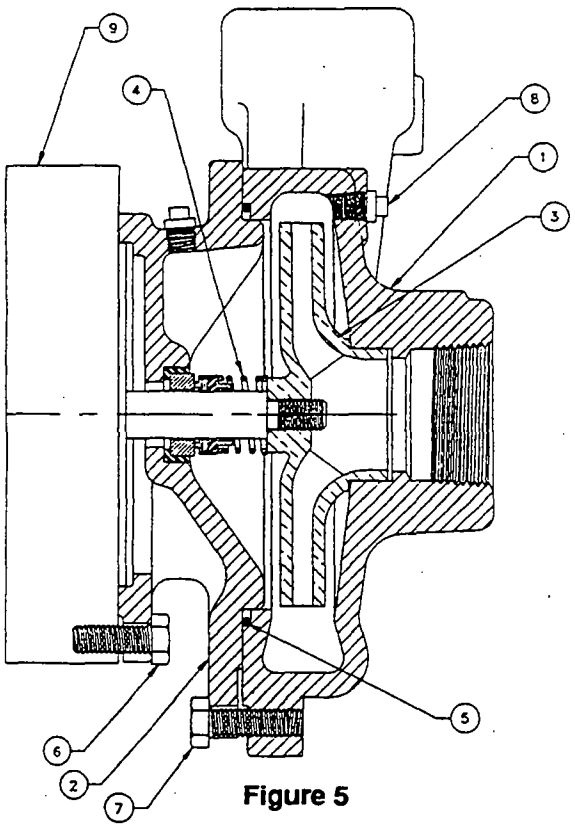

Figure 5

10. Lightly lubricate the O.D. of the stationary member of the new seal. With the seal seat towards the impeller, press the seal firmly into the adapter recess. Make sure that the seat is level and square. **NOTE: EXTREME CAUTION MUST BE EXERCISED NOT TO SCRATCH, GOUGE OR OTHERWISE MAR THE SEALING SURFACE OF THE MECHANICAL SEAL OR LEAKAGE WILL LIKELY RESULT. DO NOT LUBRICATE EPT SEALS WITH OIL OR VASOLINE.**

Figure 5

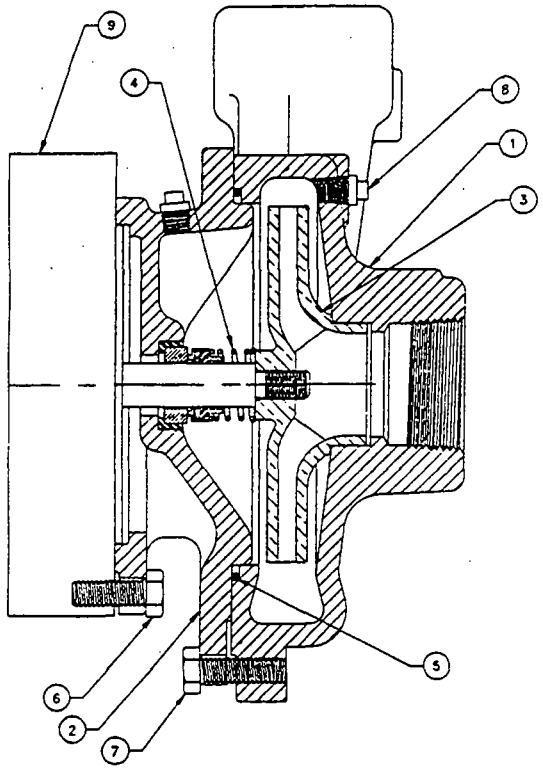

11. Mount the adapter (2), on the motor (9), by using four hex head cap screws (6).

12. To assemble mechanical seal rotating element (4), onto the shaft; Lightly lubricate the I.D. of new bellows and slide it over shaft with the carbon seal face towards the stationary seal face until seal faces meet.

Place spring (6), on the rotating member retainer so it seats properly against the shoulder.

Place spring holder (8), against the spring. Be sure the rolled edge faces toward the spring.

13. Screw the impeller (3), onto the shaft while holding shaft stationary with screwdriver placed in motor shaft slot. Make sure impeller is snugged up tight. Use a screwdriver to pry the spring holder (8), away from the impeller to be sure that the retainer isn't caught between the shaft shoulder and impeller.

14. Place the O-Ring (5), in the case and assemble pump and motor to case (1), using 4 hex head cap screws (7).

Figure 6

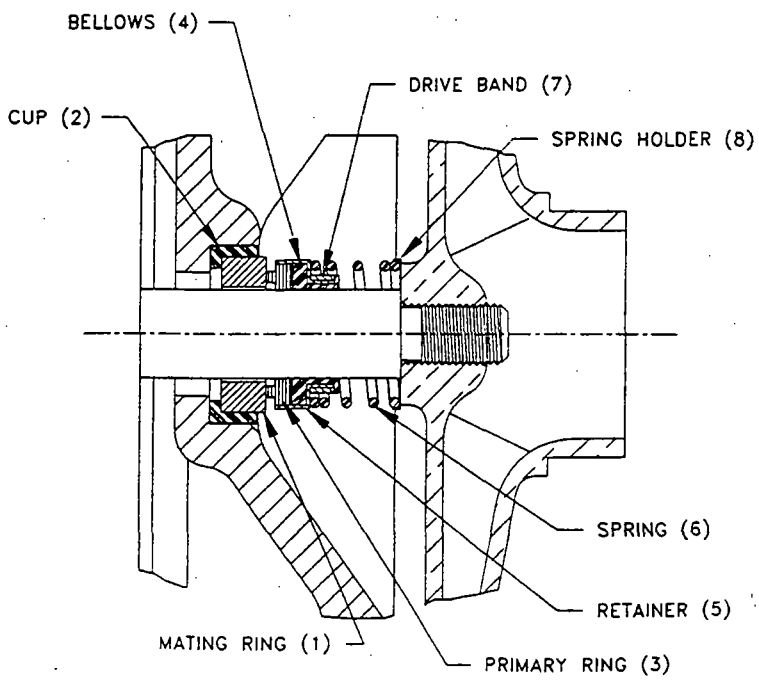

15. Remount motor to base.

16. Open valve to pump and refill the system and check for leaks.

17. Reconnect power to pump.

PARTS

ITEM	PART #	DESCRIPTION
1	C2-4407	CASE R5-1" CAST IRON
1	C2-4403	CASE R5-1-1/4" CAST IRON
1	C2-4395	CASE R6-1-1/4" CAST IRON
1	C2-4477	CASE R5-1 BRONZE
1	C2-4478	CASE R5-1-1/4" BRONZE
1	C2-4476	CASE R6-1-1/4" BRONZE
2	C2-4375	ADAPTER R5 CAST IRON
2	C2-4396	ADAPTER R6 CAST IRON
2	C2-4475	ADAPTER R5 BRONZE
2	C2-4474	ADAPTER R5 BRONZE
2	B2-5272	IMPELLER R5 1" BRONZE
3	B2-5264	IMPELLER R5 1-1/4" BRONZE
3	B2-5239	IMPELLER R6 1-1/4" BRONZE
3	B2-5283	IMPELLER R5 1" CAST IRON
3	B2-5281	IMPELLER R5 1-1/4" CAST IRON

(parts continued next page)

ITEM	PART #	DESCRIPTION
3	B2-5282	IMPELLER R6 1-1/4" CAST IRON
3	472	SEAL BUNA-N
3	2944	SEAL EPT
4	2143	SEAL VITON
4	4837	O-RING R5 BUNA-N
5	4901	O-RING R5 EPT
5	4902	O-RING R5 VITON
5	4831	O-RING R6 BUNA-N
5	4893	O-RING R6 EPT
5	4894	O-RING R6 VITON
6	753CO2A2	CAP SCREW
7	753CO2A3	CAP SCREW
8	4837	PIPE PLUG
8	459	1/3 HP ODP SINGLE PHASE MOTOR
8	460	1/2 HP ODP SINGLE PHASE MOTOR
8	461	3/4 HP ODP SINGLE PHASE MOTOR
8	462	1 HP ODP SINGLE PHASE MOTOR
9	463	1-1/2 HP ODP SINGLE PHS. MOTOR
9	464	2 HP ODP SINGLE PHASE MOTOR

ITEM	PART #	DESCRIPTION
9	2770	1/3 HP ODP THREE PHASE MOTOR
9	2771	1/2 HP ODP THREE PHASE MOTOR
9	2772	3/4 HP ODP THREE PHASE MOTOR
9	2773	1 HP ODP THREE PHASE MOTOR
9	2774	1-1/2" HP ODP THREE PHS. MOTOR
9	2775	2 HP ODP THREE PHASE MOTOR
9	4551	3 HP ODP THREE PHASE MOTOR
9	459E	1/3 HP TEFC SINGLE PHS. MOTOR
9	460E	1/2 HP TEFC SINGLE PHS. MOTOR
9	461E	3/4 HP TEFC SINGLE PHS. MOTOR
9	462E	1 HP TEFC SINGLE PHS. MOTOR
9	463E	1-1/2 HP TEFC SINGLE MOTOR
9	464E	2 HP TEFC SINGLE PHS. MOTOR
9	2770E	1/3 HP TEFC THREE PHS. MOTOR
9	2771E	1/2 HP TEFC THREE PHS. MOTOR
9	2772E	3/4 HP TEFC THREE PHS. MOTOR
9	2773E	1 HP TEFC THREE PHASE MOTOR
9	2774E	1-1/2 HP TEFC 3-PHASE MOTOR
9	2775E	2 HP TEFC 3-PHASE MOTOR
9	4551E	3 HP TEFC 3-PHASE MOTOR

SECTION IV - TROUBLE SHOOTING

Operating troubles and their probable causes are as follows:

A) INSUFFICIENT OR NO DISCHARGE PRESSURE

1. Wrong direction of rotation.
2. Pump not primed.
3. Air or vapor in suction line.
4. Suction pipe not submerged enough.
5. Available NPSH not sufficient.
6. Pump not up to rated speed.
7. Too much system head.

B) INSUFFICIENT PRESSURE

1. Wrong direction of rotation.
2. Air or vapor in suction line.
3. Air leaks in suction line.
4. Suction line not submerged enough.
5. Available NPSH not sufficient.
6. Pump not up to rated speed.
7. Mechanical defects; Impeller damaged, or Internal leakage (clearances).

C) CAVITATION OR NOISE

1. Air or gas in liquid.
2. Suction line not filled with liquid.
3. Suction line not submerged enough.
4. Available NPSH not sufficient.

D) PUMP LOSES SUCTION AFTER STARTING

1. Air leaks in suction line.
2. Air or vapor in suction line.
3. Suction line not submerged enough.
4. Available NPSH not sufficient.

E) EXCESSIVE POWER CONSUMPTION

1. Speed too high.

2. Insufficient back pressure.

3. Mechanical Defects; shaft bent, rotating element dragging, piping improperly supported.

F) VIBRATION

1. Air or vapor in suction line.

2. Worn or loose motor bearings.

3. Rotating element out of balance.

4. Shaft bent.

5. Foundation not rigid.

6. Vibration in the driver.

7. Wrong location of control valve.

8. Piping improperly supported

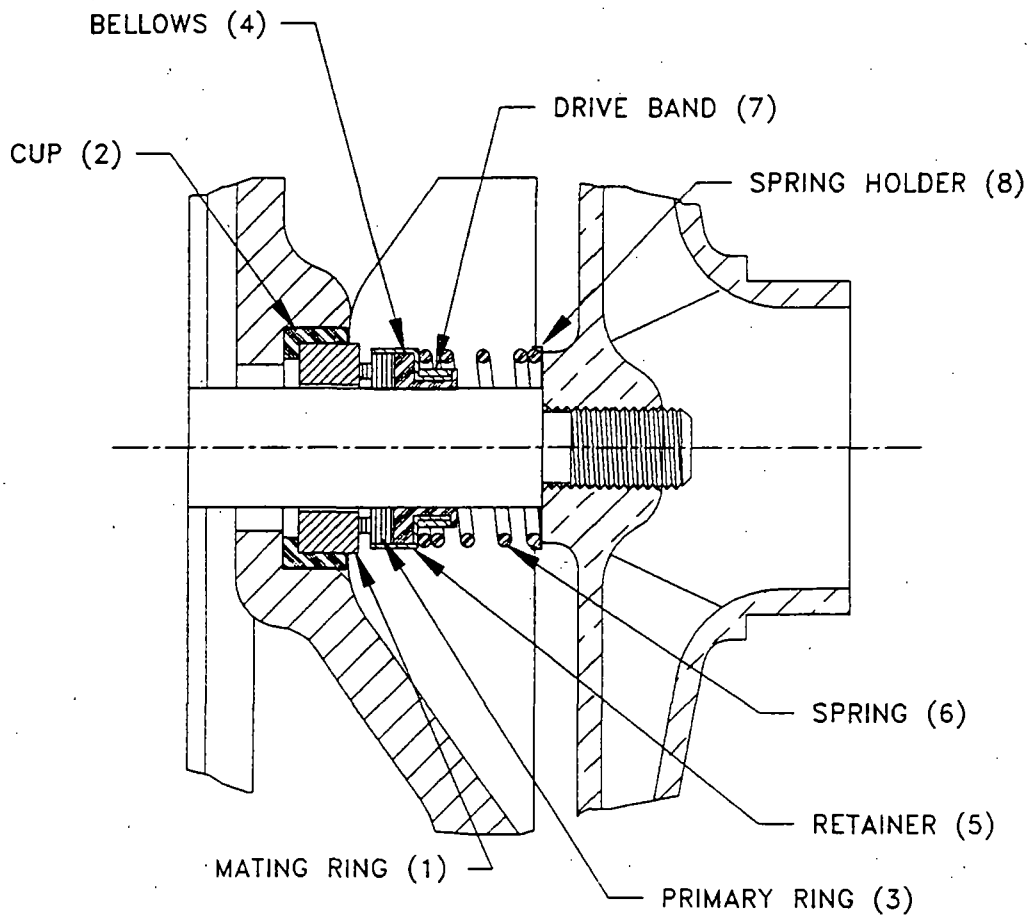

Connection Diagram

WE77/Ex2-UL

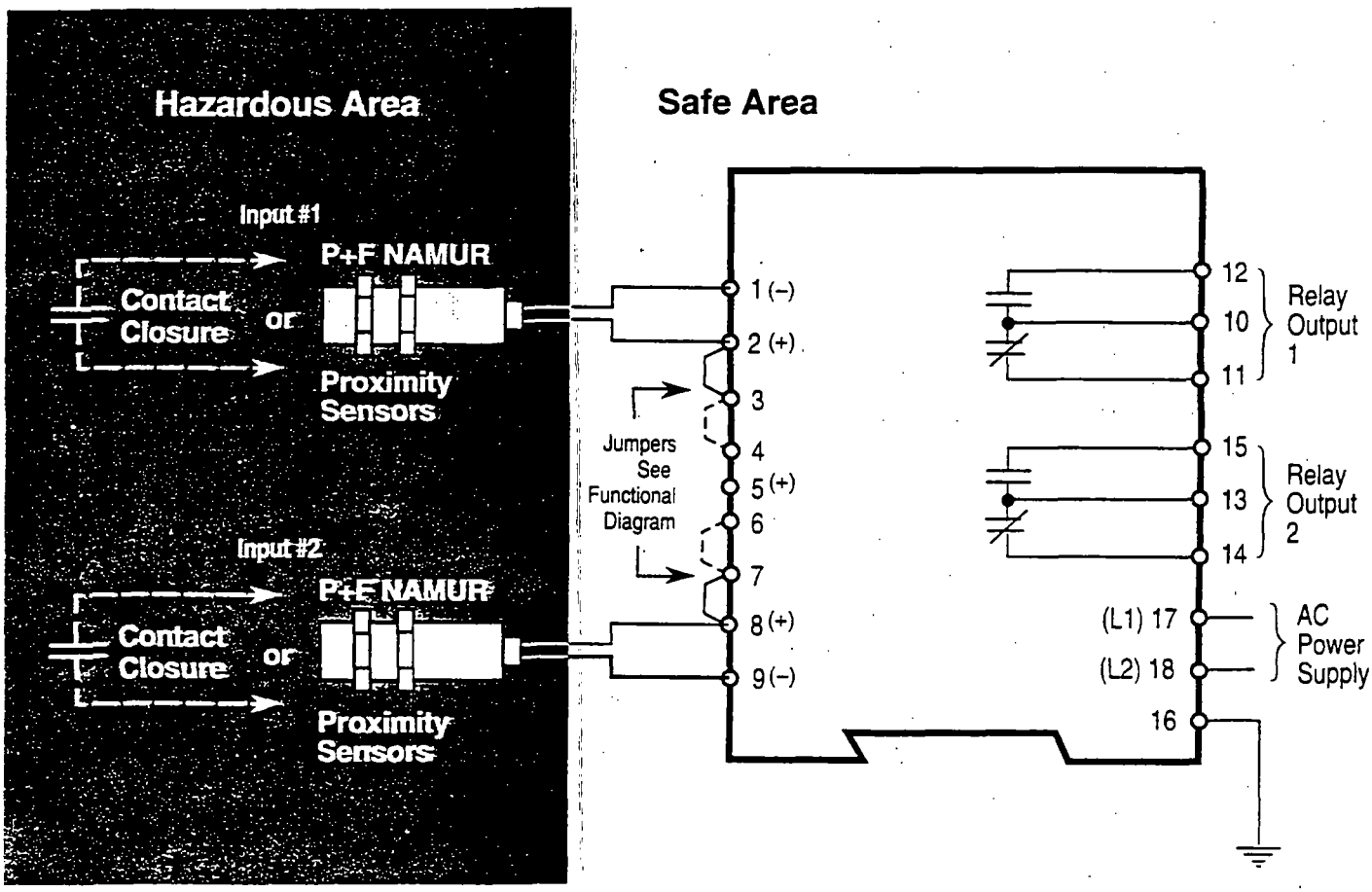

Operating Controls and Indicators: Front View

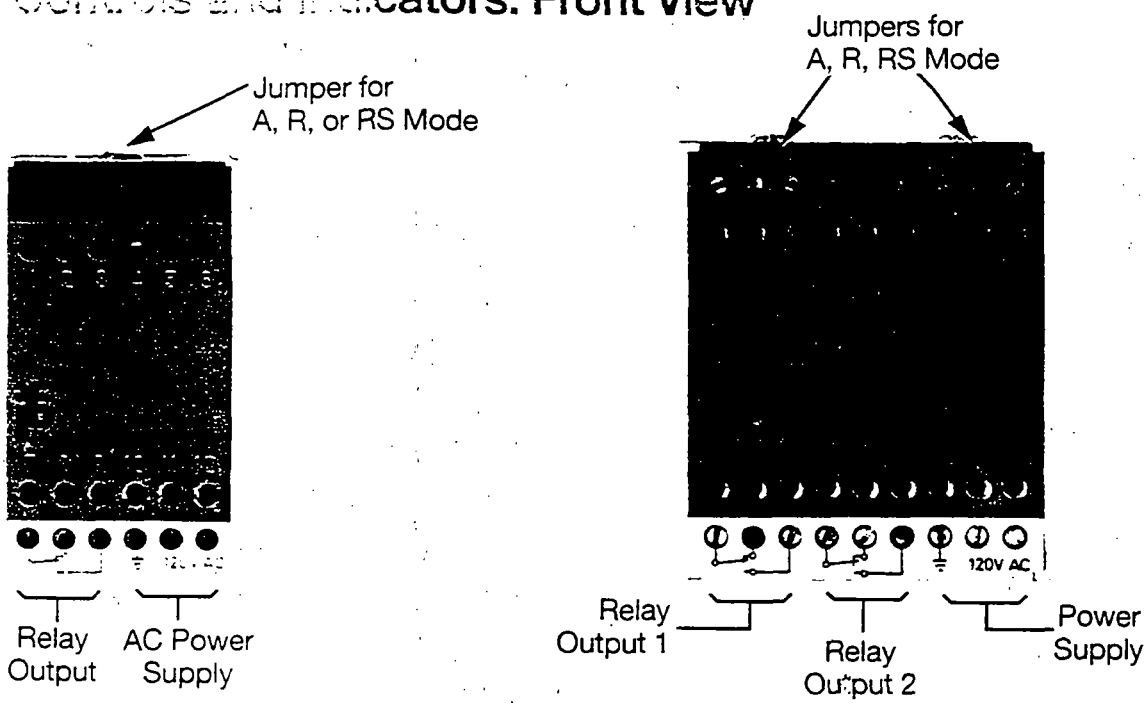

HAZARDOUS LOCATION

CLASS I, DIVISION 1, GROUPS A, B, C, D AND
CLASS II, DIVISION 1, GROUPS E, F & G
CLASS III

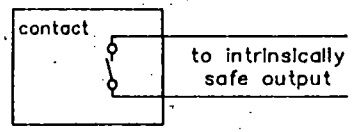

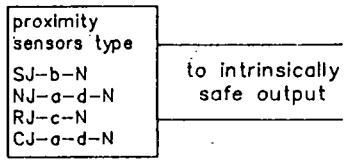

a- sensing range (mm)
b- slot width (mm)
c- ring diameter (mm)
d- mechanical form

Maximum capacitance of each sensor 0.4 microfarads, maximum inductance of each sensor 1.0 millihenry.

* The total series inductance and the shunt capacitance for the field device and cable must be restricted to the following max. values (per terminal pair)

Control Relay	Groups	Max. Inductance,* (millihenries) in series w/Terminals				Max. Capacitance,* (microfarads) across Terminals			
		1&2	8&9	1&5	5&9	1&2	8&9	1&5	5&9
WE77/EX1-UL	A and B	175	–	–	–	4.15	–	–	–
	C	525	–	–	–	18.45	–	–	–
	D	1400	–	–	–	35.1	–	–	–
WE77/EX2-UL	A and B	96	96	96	96	4.15	4.15	4.15	4.15
	C	288	288	288	288	18.45	18.45	18.45	18.45
	D	768	768	768	768	35.1	35.1	35.1	35.1

NON HAZARDOUS LOCATION

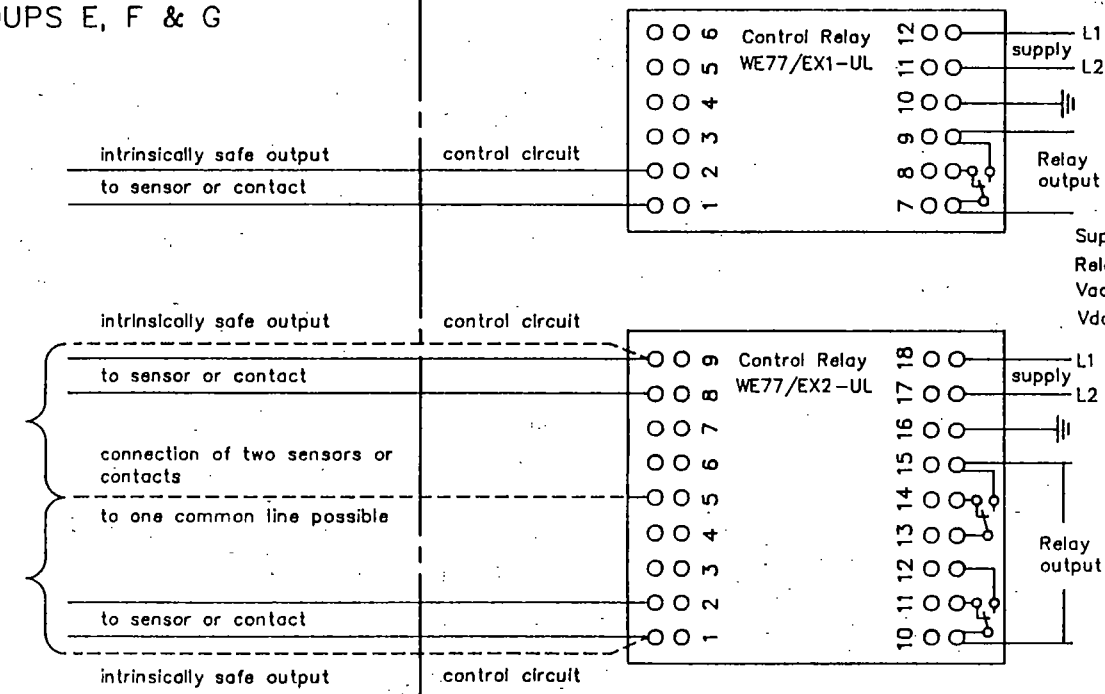

Supply 110 VAC as unit label
Relay output (each changeover contact)
Vac≤ 240V, ≤ 4A, ≤ 500VA, cosφ≥ .75
Vdc 110V, .2A
60V, .5A
24V, 1A

ILL.2
SEC.1
VOL.1
E 106378

No changes without prior UL approval

NOTE: Proximity sensors are not a part of the UL listed system

In.	Date	Cons.	Resp.	Sale	Appr.		
a							Added -UL to all model numbers
/	Change from						Change into
						Scale –	Title INSTALLATION DWG. FOR CONTROL RELAYS WE77/EX1-UL, WE77/EX2-UL
						Vendor	
						Dimens –	Draw. No. ID-15a / Part list no.
a	4-18-89	m.gl.	Cd		DS		Pepperl+Fuchs® Inc. / Repl. for
0	2-1-89						Twinsburg, OH 44087-2202 / Sh. 1 of 1

PEPPERL+FUCHS, INC.
THIS DRAWING CONTAINS PROPRIETARY DATA. NO DISCLOSURE, REPRODUCTION, OR USE OF ANY PART MAY BE MADE EXCEPT BY WRITTEN PERMISSION.

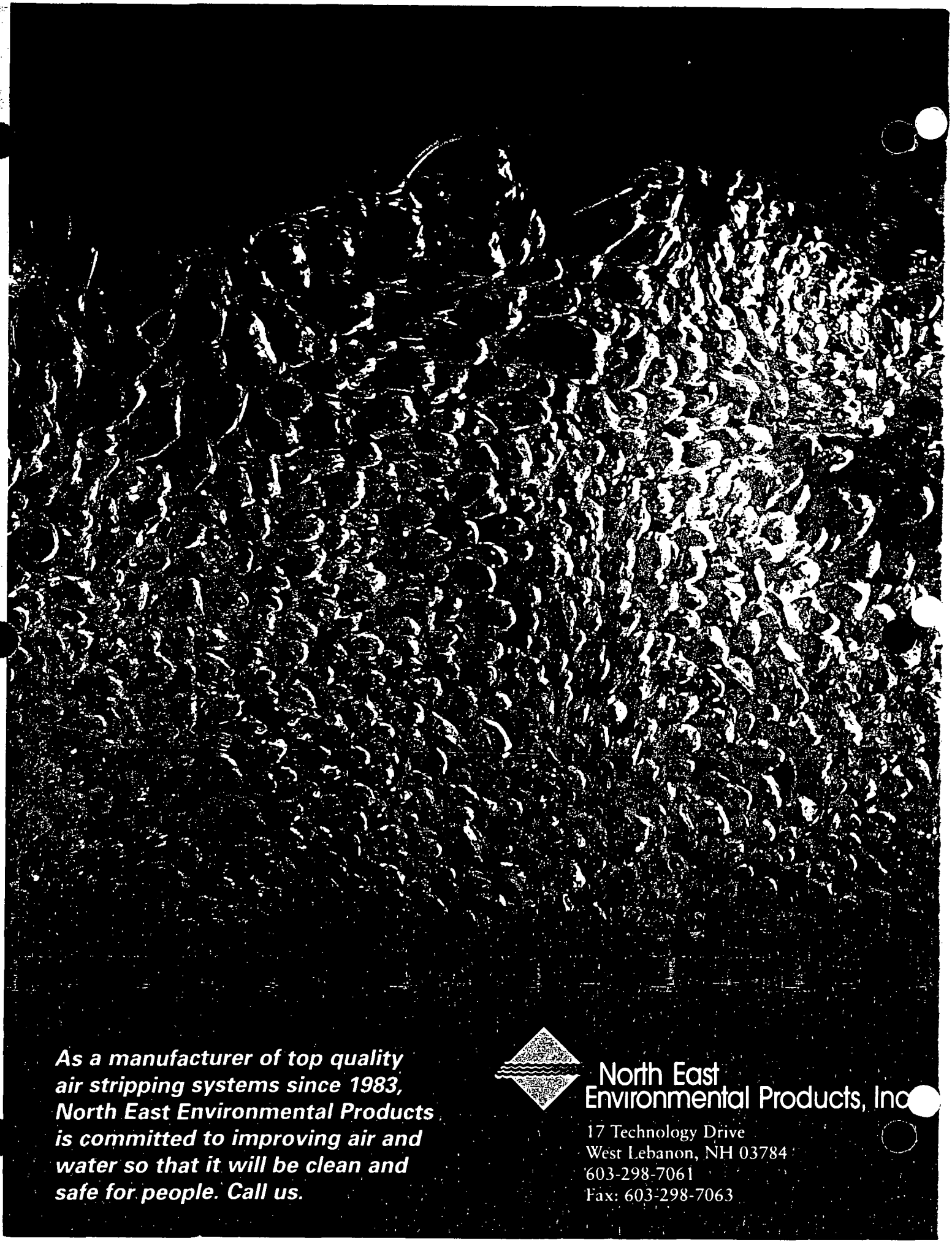

As a manufacturer of top quality air stripping systems since 1983, North East Environmental Products is committed to improving air and water so that it will be clean and safe for people. Call us.

North East
Environmental Products, Inc

17 Technology Drive
West Lebanon, NH 03784
603-298-7061
Fax: 603-298-7063

ShallowTray Serial #: 3651-06-4939 Customer: HERITAGE ENVIRONMENTAL Ship date: 4/23/97

Engineered By: RC Order Date: 2/12/97 66012785

Design Review: Engineering RC 2-17-97 Sales DAS 2/17/97

Acc Treatment Equipment

VaporMate Serial #: _____ Neozone Serial #: _____ EconoPump Serial #: _____

I. Special Components / Requirements / Information / Comments

SUBMITTAL APPROVAL REQUIRED - SUBMIT 5 COPIES BY 2/20/97
ENVIRONMENT IDENTIFICATION TAGS & EQUIPMENT ID TAGS 16 TOTAL
ONE DAY STARTUP
STAINLESS DISCHARGE STACK Ø 10" 12' LONG
DROP BLOWER INTO FRAME

II. Design Criteria

Design Water Flow Rate: 120 gpm

Maximum Water Flow Rate: 160 gpm, which is considered a ___ Low Water Flow Design, or ✓ a High Water Flow Design, and is based on the blower model selection.

Weir Height: 4" Inlet, 2" Outlet

Equipment Power Requirements: 3 Ø, 460 volts, 60 Hz

INSTALL ALL EQUIPMENT PER APPLICABLE NATIONAL AND LOCAL CODES.
CUSTOMER TO PROTECT EXPLOSION-PROOF MOTORS FROM RAIN.

III. Basic System Components

CAUTION: MAXIMUM PRESSURE OR VACUUM ACROSS STAINLESS STEEL SYSTEM = 32" WC

✓ Sump Tank, Cover — ✓ 304L stainless steel ___ 316L stainless steel

5 Aeration Trays (quantity) — ✓ 304L stainless steel ___ 316L stainless steel

✓ Latches — 304L stainless steel

✓ Main Blower (with inlet screen and damper) — American Fan Model # BC3-06-22A

Minimum Required Blower Performance: 900 cfm @ 26 "wc — Blower P/N 100-00449

10 hp, 3Ø, 460 volts, 3450 rpm — Coupling P/N 150-00150

60 Hz, ✓ TEFC or ___ EXP — Riser P/N _____

6 "Blower Inlet Size, 6 "Blower Outlet Size

✓ Blower on Inlet (Pressure system)
___ Blower on Outlet (Vacuum system)
___ Blowers on In & Out (Combo system)

Main Blower Sized For:
26 "wc required for ShallowTray Air Stripper
0 "wc additional available for airstream equipment

✓ Demister Pad — Koch style 4310, 4" thick, 304 ss

___ Spray Nozzle — Hollow cone, 90° pattern, sized for 15 psi, brass

✓ Sight Tube — Brass, Nalgene tubing

✓ Aeration Tray Gaskets — High density nitrile sponge rubber

✓ Inlet Piping Connection — Schedule 80 PVC, Brass

✓ Blower and Vent Line Connections — Flexible rubber couplings

✓ GRAVITY INLET TUBE

✓ Frame	3 in. and 4 in. welded steel, C-Channel
___ Air Pressure Gauge (0 - 40 "wc)	Dwyer Magnehelic 2000 series
✓ Gravity Discharge Riser	PVC 80 Piping, with vacuum relief valve
___ Additional Blower (with inlet screen and damper)	_____ Fan Model #_____
Required Performance	_____cfm @ _____" wc Blower P/N_____
	____hp, ___Ø, _____volts, _____rpm, _____ Hz, ___TEFC or ___EXP
	___"Blower Inlet Size, ____"Blower Outlet Size
___ Feed Pump	_____ Pump Model #_____
Required Performance	_____ gpm @ _____' TDH Feed Pump P/N_____
	____hp, ___Ø, _____volts, _____rpm, _____ Hz, ___TEFC or ___EXP
	Port Sizes: _____ inch inlet, _____ inch outlet. Impellor Size _____ inches
___ Discharge Pump	_____ Pump Model #_____
Required Performance	_____ gpm @ _____' TDH Discharge Pump P/N_____
	____hp, ___Ø, _____volts, _____rpm, _____ Hz, ___TEFC or ___EXP
	Port Sizes: _____ inch inlet, _____ inch outlet. Impellor Size _____ inches
___ Main Disconnect Switch	Integral with electrical enclosure, rotary style
___ Control Panel	Motor starters, system alarm interlock circuit, operator switches, alarm light, NEMA ____ Enclosure, _____ Amps, ____Ø, _____Volts, _____Hz, _____ wire and ground
___ Control Panel w/ Pump Level Control	Motor starters, system alarm interlock circuit, pump level control circuit, operator switches, alarm light, NEMA ____ Enclosure, _____ Amps, ____Ø, _____Volts, _____Hz, _____ wire and ground
___ PurgePanel ™	NEMA 7 Main Disconnect switch, NEMA 4 enclosure. air pressure gauge. Low air pressure switch, Blower (100 cfm @ 2" w.c.)
___ Autodialer	Sensaphone 4100
___ Control Circuit Transformer	_____:120vac
___ Intrinsically-Safe Relay	_____ Pepperl+Fuchs, WE77/Ex2-UL repeater relay Dual Channel, SPDT relay output _____ Warrick 27A1E0 latching relay Single Channel, SPDT relay output
___ Intermittent Operation	Blower time-delay circuit added to panel design. Blower shuts off 5 minutes after inlet water flow stops.
___ Auto Operation	# of wells _____
___ Well Probes	Warrick, series 3Y, 80' cord
___ Blower Start/Stop Switch	Local blower switch mounted near blower
___ Power Lapse Indicator	Black-out / Brown-out indicating light, switch and circuit added to panel design
___ Individual Alarm Light	Light and relay circuit added to panel design
___ Strobe Alarm Light	___Red, ___ Blue, Federal Signal, NEMA 4, UL listed
___ Alarm Horn	Federal Signal
✓ Low Air ✓ Press. ___ Vacuum Switch	Dwyer 1950-1, preset at 1.6" wc (range=0.3"wc to1.5" wc), Explosion-proof
___ High Air ___ Press. ___ Vacuum Switch	Dwyer 1950, _____"wc to _____"wc, Explosion-proof
___ Low Water Level Alarm Float Switch	Mechanical, SJ Electro, (qty)____N.O., (qty)____N.C.
✓ High Water Level Alarm Float Switch	Mechanical, SJ Electro, (qty)____N.O., (qty)__1__N.C.
2 Discharge Pump Float Switch	Mechanical, SJ Electro. (qty)__2__N.O., (qty)____N.C. (SHIP SEPARATE)
___ Water Flow Meter	Halliburton, MCII digital readout
___ Air Flow Meter	Dwyer 2000-0 meter, single-point insertion pitot tube, mounting kit
___ Water Press. Gauge, ___inlet, ___outlet	Dial gauge, liquid-filled
___ Water Temp. Gauge, ___inlet, ___outlet	Dial gauge
___ Line Sampling Port, ___inlet, ___outlet	Schedule 80 PVC
___ Air Blower Silencer	Clevaflex, CSA series
✓ Washer Wand	Nozzle, Elbow, 1/4" steel pipe
___ Viewport Set - (1) 4"Ø, (1) 8"Ø	Lexan viewports with rubber coupling

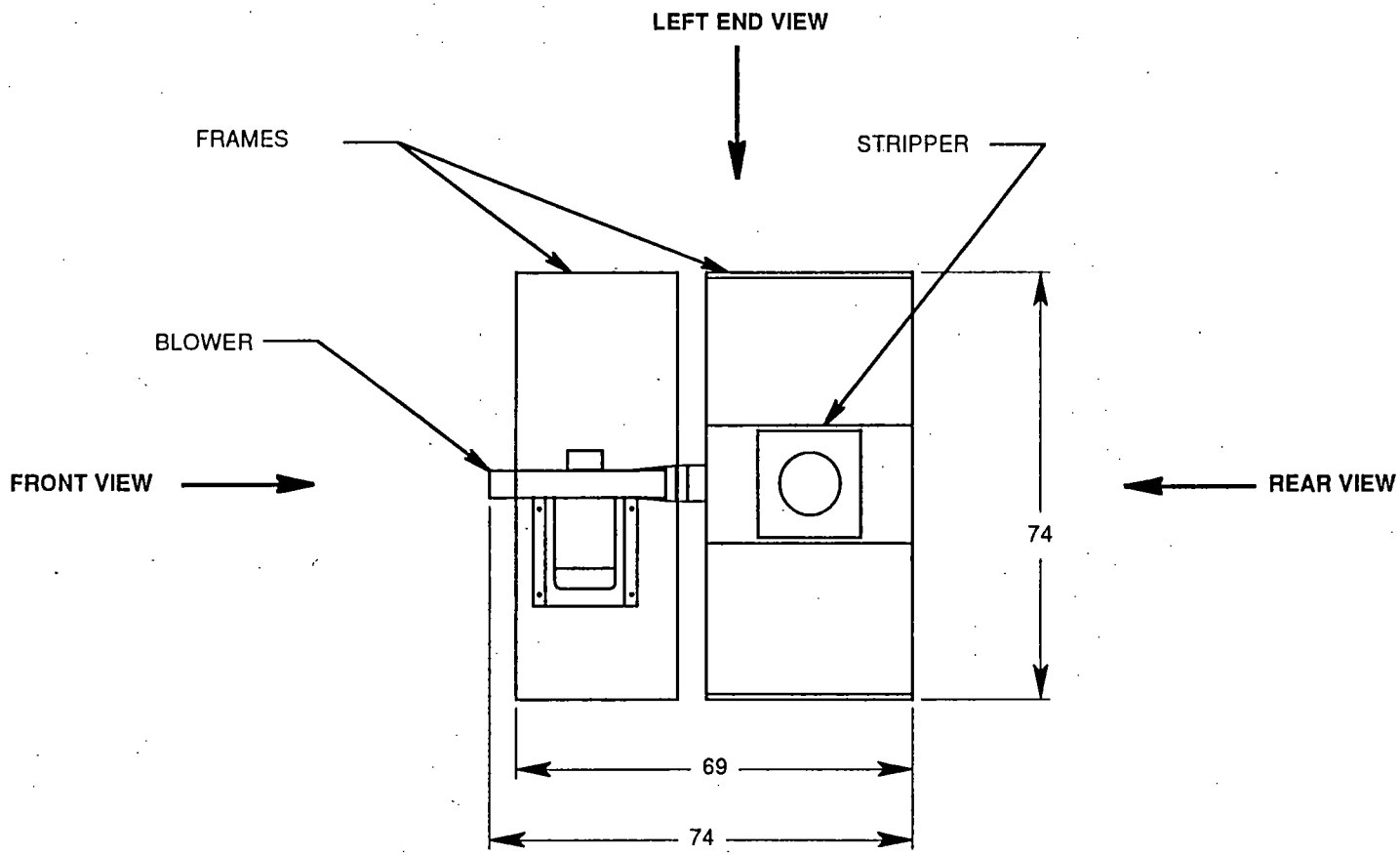

OVERALL HEIGHT 96.5"
INCLUDING FRAME

FRAME IS 7" HIGH

DIMENSIONS ARE APPROXIMATE

NORTH EAST ENVIRONMENTAL PRODUCTS, INC.
17 TECHNOLOGY DRIVE
WEST LEBANON, NEW HAMPSHIRE 03784

TITLE

SYSTEM LAYOUT - PLAN VIEW

SIZE	DWG NO.	SHEET	REV
A	4939 LAYOUT	1 OF 1	Ø

SCALE		DRAWN	DATE
NONE	DO NOT SCALE DRAWING	RC	2/17/97

3651 BASE SUBASSEMBLY

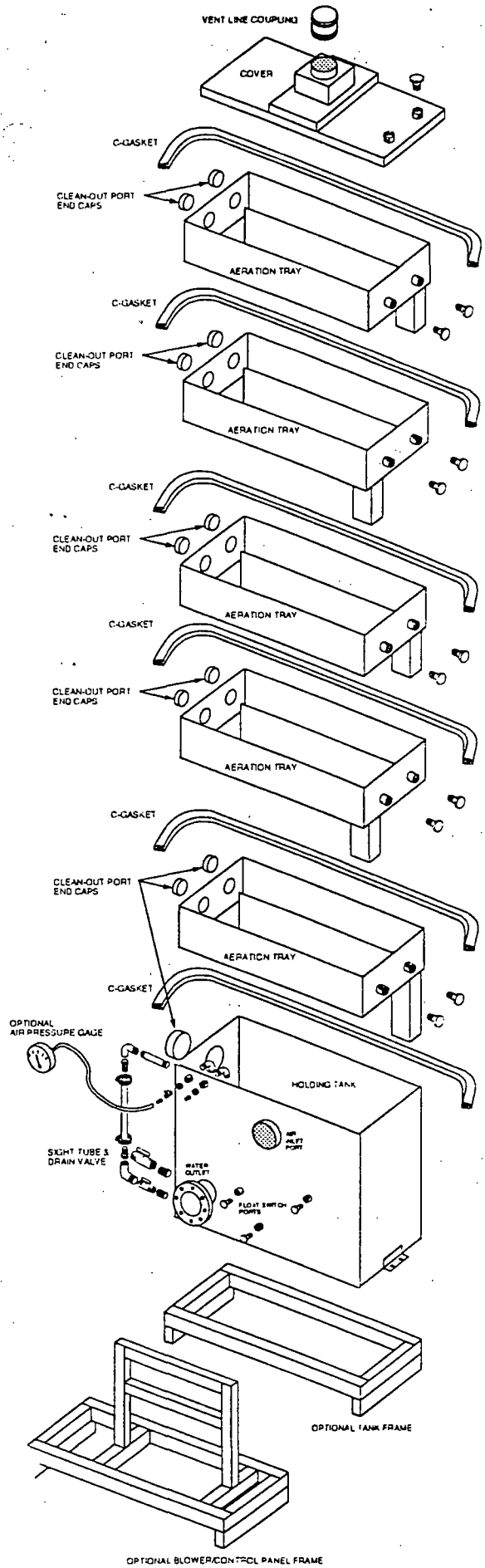

1	200-160-00120	Cover Assembly,3600-9"
5	200-160-00110	Tray, Aeration Assy.3600-9"
1	200-160-00100	Tank Assembly, 3600-9"
1	200-140-00010	Sight tube Assy, small
1	200-140-00142	Drain Valve Sub. 1"
1	500-160-01500	Downcomer, 32", 3600-9"
4	500-160-01490	Downcomer,11"L,3600,304SST
5	500-160-01510	Sealpot,3600,304SST
5	500-160-01470	Weir,2.0"H,3600,304SST
5	500-160-01480	Weir,4.0"H,3600,304SST
10	500-150-00295	Gasket,Sealpot/DC,3600-9"
1	500-160-00070	Demister SQ,18x18x4,(3600)
1	500-150-00170	Coupling Rubber 10x10
10	500-150-00220	Cap,Rubber,4(4.0)
1	500-150-00200	Cap Rubber 8"
10	500-140-02020	Plug,1.0",Thread,PVC 40
1	500-140-02060	Plug,3.0",Thread,PVC 40
2	500-140-02880	Hose Barb .125Mx.188M
2	500-140-02520	Elbow Street 90, .5Fx.5M
2	500-140-02205	Bushing .5Mx.125F,TxT,Brass
1	500-140-02735	Valve,Shut-Off,1/8Mx1/8F,Brass
108'	500-150-00230	Gasket,J,Flange,SST Tray,Vacuu

SELECT OPTIONAL FRAME COMPONENTS AS REQUIRED:

☐ 1 - (500-170-00071) TANK FRAME, 3600

☐ 1 - (500-170-00061), BLOWER FRAME, 3600

☐ 1 - (500-170-00045), PANEL MOUNT, 3600

NORTH EAST ENVIRONMENTAL PRODUCTS, INC.
17 TECHNOLOGY DRIVE
WEST LEBANON, NH 03784
(603) 298-7061

TOLERANCES UNLESS OTHERWISE SPECIFIED ± 1 ML	DRAWING NAME: 3651 BASE SUBASSEMBLY
	DRAWING #: 200-160-00526
DRAWN: KJH DATE: 8/25/94	CUSTOMER:
REV: B DATE: 10/28/94	SCALE:

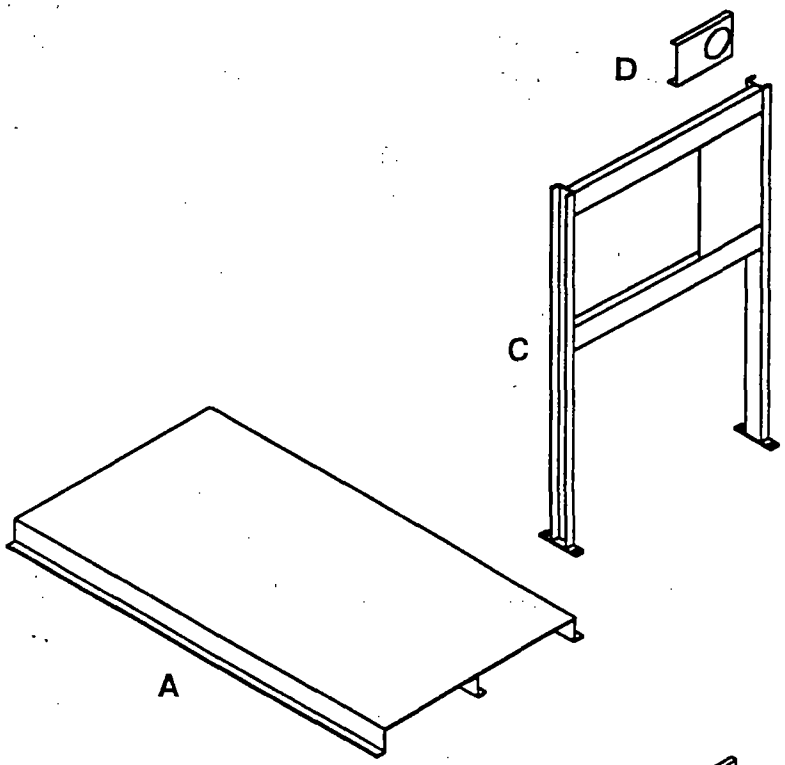

FRAMES FOR PLASTIC SYSTEMS

200-170-00041 Frame Assembly, 1300P Steel
A 1 500-170-00332 Frame,Steel,1300P
C 1 500-170-00045 Frame, control panel
D 1 500-170-00047 Instrument bracket

200-170-00042 Frame assembly, 2300P steel
A 1 500-170-00330 Frame,Steel,2300P
C 1 500-170-00045 Frame, control panel
D 1 500-170-00047 Instrument bracket

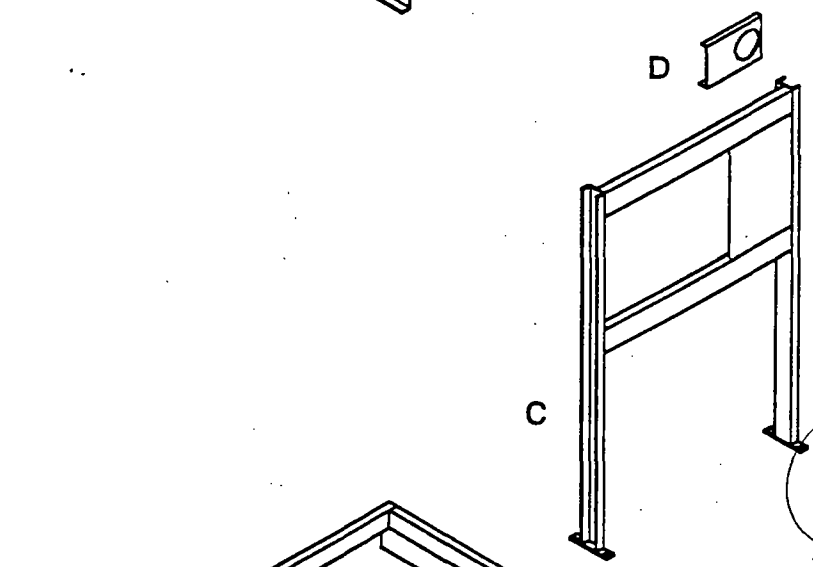

FRAMES FOR STAINLESS SYSTEMS

200-170-00030 Frame assembly, 1300
A 1 500-170-00021 Frame Tank, Steel, 1300
B 1 500-170-00031 Frame, Blower, Steel, 1300/2300
C 1 500-170-00045 Frame, control panel
D 1 500-170-00047 Instrument bracket

200-170-00031 Frame assembly, 2300
A 1 500-170-00041 Frame, Holding Tank, Steel, 2300
B 1 500-170-00031 Frame, Blower, Steel, 1300/2300
C 1 500-170-00045 Frame, control panel
D 1 500-170-00047 Instrument bracket

200-170-00032 Frame assembly, 2600
A 1 500-170-00051 Frame, Holding Tank,Steel 2600
B 1 500-170-00061 Frame, Blower, Steel 2600/3600
C 1 500-170-00045 Frame, control panel
D 1 500-170-00047 Instrument bracket

200-170-00033 Frame assembly, 3600
A 1 500-170-00071 Frame, Tank, Steel, 3600
B 1 500-170-00061 Frame, Blower, Steel 2600/3600
C 1 500-170-00045 Frame, control panel
D 1 500-170-00047 Instrument bracket

200-170-00034 Frame assembly 31200
A 1 500-170-00080 Frame, Tank, Steel, 31200
B 1 500-170-00091 Frame, Blower, Steel, 31200
C 1 500-170-00045 Frame, control panel
D 1 500-170-00047 Instrument bracket

200-170-00035 Frame assembly, 41200
A 1 500-170-00100 Frame,Tank,Steel 41200
B 1 500-170-00096 Frame, Blower, Steel, 41200
C 1 500-170-00045 Frame, control panel
D 1 500-170-00047 Instrument bracket

NORTH EAST ENVIRONMENTAL PRODUCTS, INC.
17 TECHNOLOGY DRIVE
WEST LEBANON, NEW HAMPSHIRE 03784

TITLE

SHALLOW TRAY FRAME OPTION

SIZE	DWG NO.	SHEET	REV
A	900-170-00020	1 OF 1	Ø

SCALE		DRAWN	DATE
NONE	DO NOT SCALE DRAWING	RC	11/4/96

3600 COUPLING LAYOUT

	PORT DESCRIPTION	SIZE
A	WATER INLET PORTS	3.0" FEMALE NPT FULL COUPLING
C	AIR INLET PORT	8.0" SLIP FIT RING FOR RUBBER COUPLING
D	SUMP DRAIN PORT TRAY SAMPLE PORT	1.0" FEMALE NPT HALF COUPLING
E	FLOAT SWITCH PORTS FOR GRAVITY DISCHARGE	0.5" FEMALE NPT FULL COUPLING
F	SIGHT TUBE PORTS	0.5" FEMALE NPT FULL COUPLING
G	AIR EXHAUST PORT	10.0" SLIP FIT RING FOR RUBBER COUPLING
H	SUMP TANK VIEW PORT	8.0" SLIP FIT RING FOR RUBBER CAP
J	AERATION TRAY VIEW PORT	4.0" SLIP FIT RING FOR RUBBER CAP
K	PRESSURE PORTS	0.5" FEMALE NPT FULL COUPLING
L	WATER OUTLET PORT	6.0" Backup Flange 6.0" Flange Stub End
P	FLOAT SWITCH PORTS FOR OUTLET PUMP	0.5" FEMALE NPT FULL COUPLING

TOP

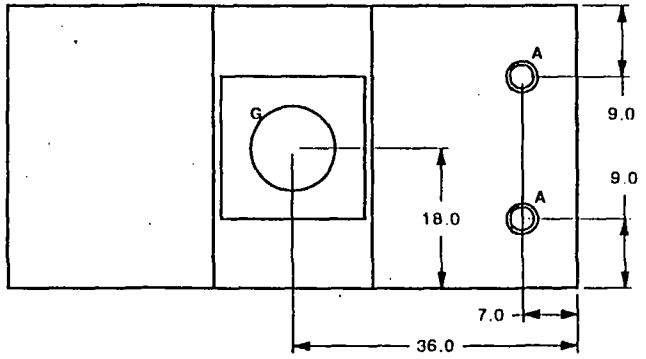

DIMENSION CHART (INCHES)

	X	Y	Z
3611	44.25	43.25	52.5
3621	53.5	52.5	61.75
3631	62.75	61.75	71.0
3641	72.0	71.0	80.25
3651	81.25	80.25	89.5

NOTE:
INCLUDES ADDITIONAL HEIGHT OF GASKET BETWEEN TRAYS AND COVER.

LEFT

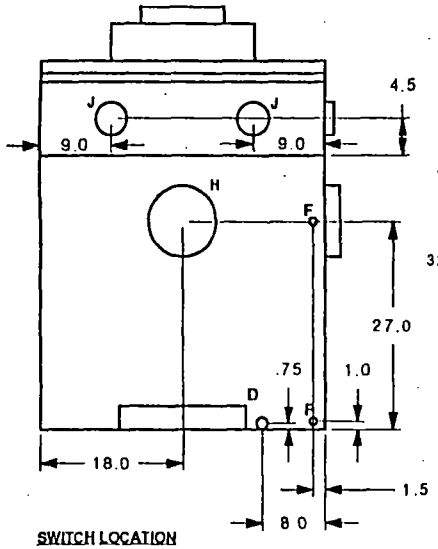

FRONT

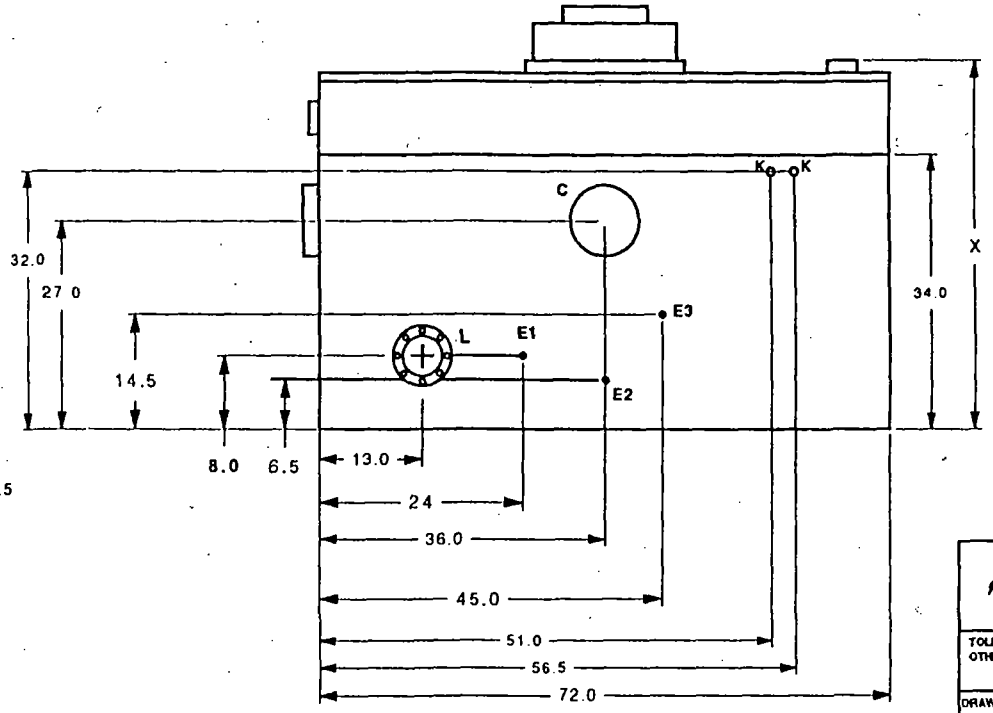

RIGHT

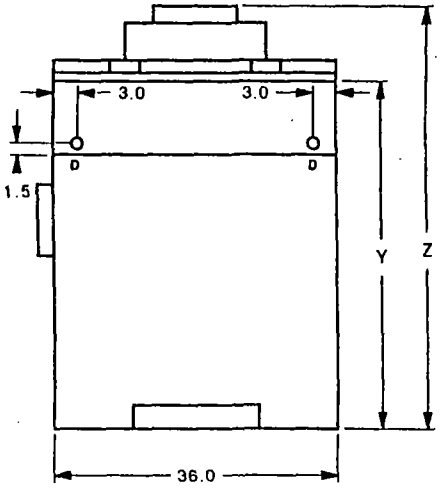

SWITCH LOCATION

E1	E2	E3	
			FLOAT SWITCH, NORMALLY OPEN
		X	FLOAT SWITCH, NORMALLY CLOSED
X	X		0.5" NPT PLUG

X INDICATES ITEM INSTALLED ON PORT

NORTH EAST ENVIRONMENTAL PRODUCTS, INC.
17 TECHNOLOGY DRIVE
WEST LEBANON, NH 03784
(603)-298-7061

TOLERANCES UNLESS OTHERWISE SPECIFIED ±.060 in.	DRAWING NAME: COUPLING LAYOUT, 3600-9"
DRAWN BY: SC	DRAWING #: 900-160-00073
DATE: 7/10/96	SHEET: 1 OF: 1 / SIZE: A
REV: C	DRAWING SCALE: 1:20

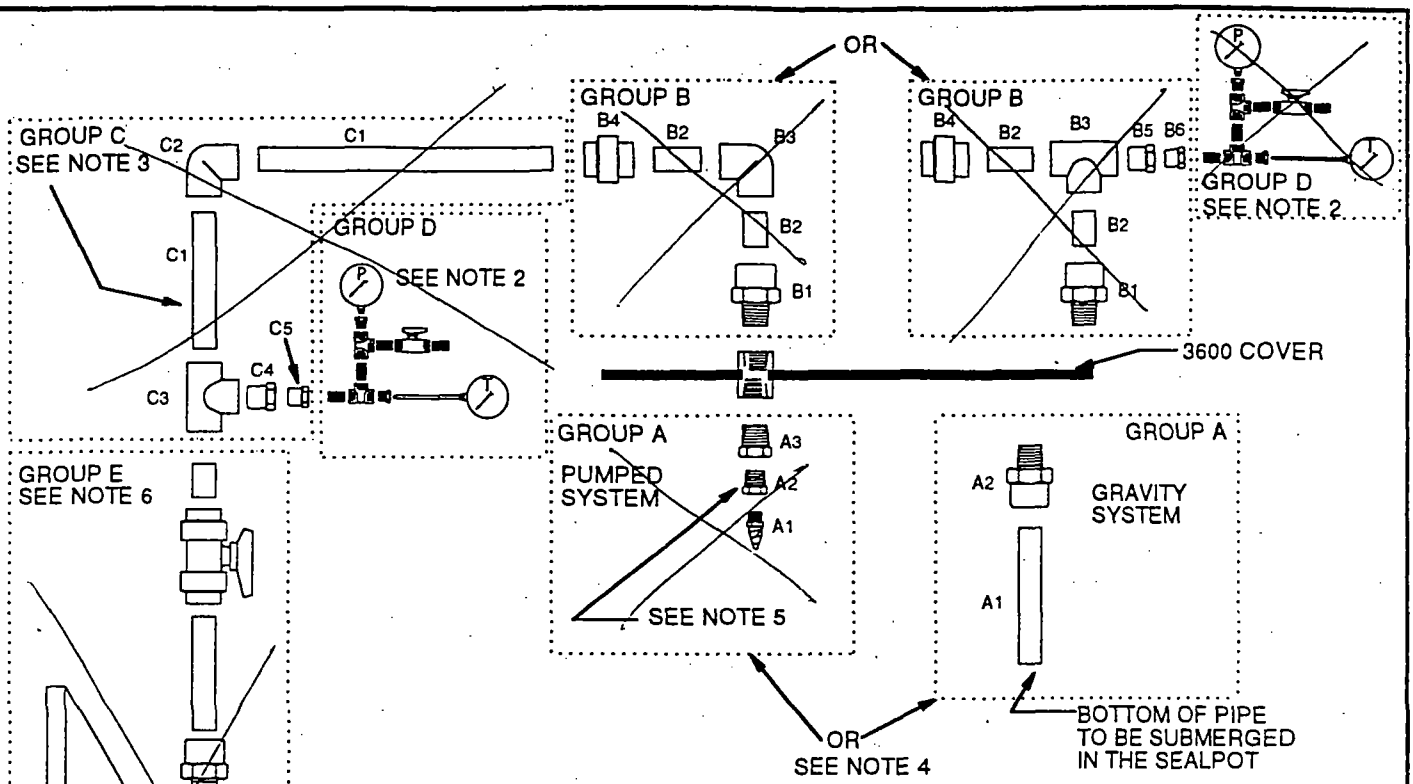

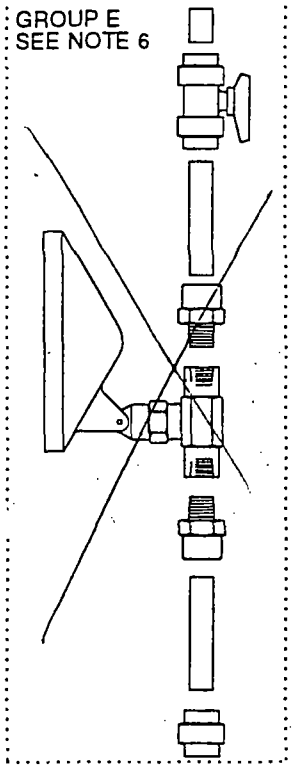

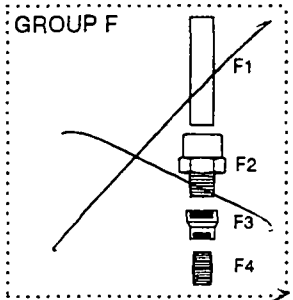

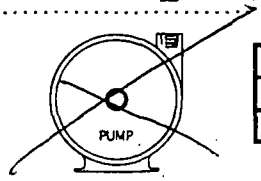

PUMP PORTS	
INLET	
OUTLET	

NOTES

1. DRAWING SHOWS MAXIMUM CONFIGURATION. ACTUAL PLUMBING SYSTEM MAY NOT CONTAIN ALL PARTS. SEE GROUP SELECTIONS ON SHEET 2 FOR ACTUAL SYSTEM.
2. SEE DRAWING 900-140-00009 FOR GROUP D DETAILS. GROUP D IS MOUNTED TO GROUP C WHEN GROUP C IS SELECTED, OTHERWISE GROUP D IS MOUNTED TO GROUP B.
3. PIPE LENGTH VARIES WITH NUMBER OF TRAYS.
   - 1 TRAY PIPE LENGTH ___ INCHES
   - 2 TRAY PIPE LENGTH ___ INCHES
   - 3 TRAY PIPE LENGTH ___ INCHES
   - 4 TRAY PIPE LENGTH ___ INCHES
   - 5 TRAY PIPE LENGTH ___ INCHES
4. GRAVITY SYSTEMS HAVE STRAIGHT TUBE INSTALLED. PUMPED SYSTEMS HAVE NOZZLE OPTION INSTALLED.
5. BUSHING NOT USED WITH LARGE NOZLE.
6. PIPE LENGHT BEFORE AND AFTER FLOWMETER MUST BE FIVE DIAMETERS IN LENGTH. SEE DRAWING NUMBER 900-140-00019 FOR GROUP E SELECTION DETAILS.

DESIGN FLOW RATE
120 GPM

NORTH EAST ENVIRONMENTAL PRODUCTS, INC.
17 TECHNOLOGY DRIVE
WEST LEBANON, NEW HAMPSHIRE 03784

TITLE: **3600 INLET PLUMBING SYSTEM PVC 80**

SIZE	DWG NO.	SHEET	REV
A	900-140-00018	1 OF 2	Ø

SCALE		DRAWN	DATE
NONE	DO NOT SCALE DRAWING	RC	8-31-94

PLUMBING SYSTEM SELECTION

SELECT ONE FROM EACH APPLICABLE GROUP

GROUP A

☐ **200-140-01260 NOZZLE (3 TO 14GPM)**
A1 1 500-140-00170 Nozzle,14.5gpm@15psi,.5,Brass
A2 1 500-140-00500 Bushing,2.0Mx.5F,TxT,PVC80
A3 1 500-140-00629 Bushing,3.0Mx2.0F,TxT,PVC 80

☐ **200-140-01261 NOZZLE (14 TO 50 GPM)**
A1 1 500-140-00220 Nozzle,78.5gpm@15psi,1.5,Brass
A2 1 500-140-00570 Bushing,2.0Mx1.5F,TxT,PVC80
A3 1 500-140-00629 Bushing,3.0Mx2.0F,TxT,PVC 80

☐ **200-140-01262 NOZZLE (50 TO 135GPM)**
A1 1 500-140-00232 Nozzle,169gpm@15psi,2.0,Brass,
A3 1 500-140-00629 Bushing,3.0Mx2.0F,TxT,PVC 80

☑ **200-140-01263 GRAVITY (3" PIPE)**
A1 10" 500-140-01700 Pipe,3.0",PVC 80
A2 1 500-140-01130 Adapter,3.0Mx3.0F,TxS, PVC 80

GROUP B

☐ **200-140-01264 ENTRY ELBOW**
B1 1 500-140-01130 Adapter,3.0Mx3.0F,TxS, PVC 80
B2 12" 500-140-01700 Pipe,3.0",PVC 80
B3 1 500-140-00890 Elbow,90,3.0Fx3.0F,SxS,PVC 80
B4 1 500-140-01270 Union,3.0,SxS,PVC80

☐ **200-140-01265 ENTRY MANIFOLD**
B1 1 500-140-01130 Adapter,3.0Mx3.0F,TxS, PVC 80
B2 12" 500-140-01700 Pipe,3.0",PVC 80
B3 1 500-140-01020 Tee,3.0",S,PVC80
B4 1 500-140-01270 Union,3.0,SxS,PVC80
B5 1 500-140-00610 Bushing,3.0Mx1.0F,SxS,PVC80
B6 1 500-140-00300 Bushing,1.0Mx.5F,SxT,PVC80

GROUP F

☐ **200-140-01275 PUMP (2" OUTLET PORT)**
F1 12" 500-140-01700 Pipe,3.0",PVC 80
F2 1 500-140-01130 Adapter,3.0Mx3.0F,TxS, PVC 80
F3 1 500-140-02468 Coupling,Reducer,3.0Fx2.0F,TxT
F4 1 500-140-03210 Nipple,2.0xClose,TxT,Brass

☐ **200-140-01276 PUMP (1.5" OUTLET PORT)**
F1 12" 500-140-01700 Pipe,3.0",PVC 80
F2 1 500-140-01130 Adapter,3.0Mx3.0F,TxS, PVC 80
F3 1 500-140-02467 Coupling,reducer,3.0Fx1.5F,TxT
F4 1 500-140-03170 Nipple,1.5xClose,TxT,Brass

GROUP D

☐ SEE DRAWING N° 900-140-00009
FOR GROUP D SELECTION

GROUP E

☐ SEE DRAWING N° 900-140-00019
FOR GROUP E SELECTION

GROUP C

☐ **200-140-01266 TRAY EXTENDER (1 TRAY)**
C1 30" 500-140-01700 Pipe,3.0",PVC 80
C2 1 500-140-00890 Elbow,90,3.0Fx3.0F,SxS,PVC 80
C3 1 500-140-01020 Tee,3.0",S,PVC80
C4 1 500-140-00610 Bushing,3.0Mx1.0F,SxS,PVC80
C5 1 500-140-00300 Bushing,1.0Mx.5F,SxT,PVC80

☐ **200-140-01267 TRAY EXTENDER (2 TRAY)**
C1 40" 500-140-01700 Pipe,3.0",PVC 80
C2 1 500-140-00890 Elbow,90,3.0Fx3.0F,SxS,PVC 80
C3 1 500-140-01020 Tee,3.0",S,PVC80
C4 1 500-140-00610 Bushing,3.0Mx1.0F,SxS,PVC80
C5 1 500-140-00300 Bushing,1.0Mx.5F,SxT,PVC80

☐ **200-140-01268 TRAY EXTENDER (3 TRAY)**
C1 50" 500-140-01700 Pipe,3.0",PVC 80
C2 1 500-140-00890 Elbow,90,3.0Fx3.0F,SxS,PVC 80
C3 1 500-140-01020 Tee,3.0",S,PVC80
C4 1 500-140-00610 Bushing,3.0Mx1.0F,SxS,PVC80
C5 1 500-140-00300 Bushing,1.0Mx.5F,SxT,PVC80

☐ **200-140-01269 TRAY EXTENDER (4 TRAY)**
C1 60" 500-140-01700 Pipe,3.0",PVC 80
C2 1 500-140-00890 Elbow,90,3.0Fx3.0F,SxS,PVC 80
C3 1 500-140-01020 Tee,3.0",S,PVC80
C4 1 500-140-00610 Bushing,3.0Mx1.0F,SxS,PVC80
C5 1 500-140-00300 Bushing,1.0Mx.5F,SxT,PVC80

☐ **200-140-01270 TRAY EXTENDER (5 TRAY)**
C1 70" 500-140-01700 Pipe,3.0",PVC 80
C2 1 500-140-00890 Elbow,90,3.0Fx3.0F,SxS,PVC 80
C3 1 500-140-01020 Tee,3.0",S,PVC80
C4 1 500-140-00610 Bushing,3.0Mx1.0F,SxS,PVC80
C5 1 500-140-00300 Bushing,1.0Mx.5F,SxT,PVC80

NORTH EAST ENVIRONMENTAL PRODUCTS, INC.
17 TECHNOLOGY DRIVE
WEST LEBANON, NEW HAMPSHIRE 03784

TITLE: **3600 INLET PLUMBING SYSTEM PVC 80**

SIZE	DWG NO.	SHEET	REV
A	900-140-00018	2 OF 2	Ø

SCALE		DRAWN	DATE
NONE	DO NOT SCALE DRAWING	RC	8-31-94

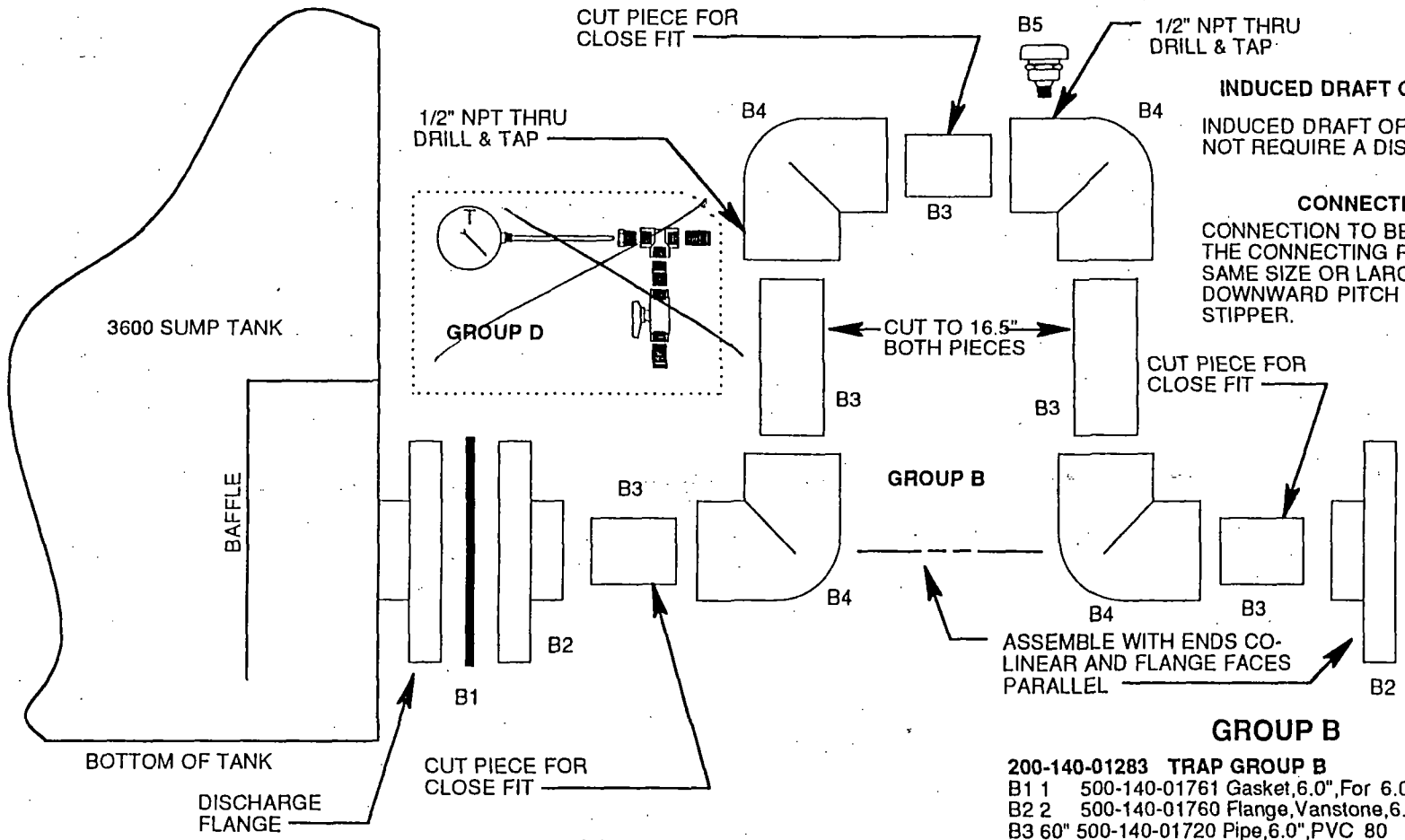

INDUCED DRAFT OR PUMPED SYSTEMS

INDUCED DRAFT OR PUMPED SYSTEMS DO NOT REQUIRE A DISCHARGE TRAP.

CONNECTION NOTE

CONNECTION TO BE MADE WITH A FLANGE. THE CONNECTING PIPE MUST BE OF THE SAME SIZE OR LARGER AND MUST HAVE A DOWNWARD PITCH AWAY FROM THE STIPPER.

GROUP B

200-140-01283 TRAP GROUP B

B1	1	500-140-01761 Gasket,6.0",For 6.0" Vanstone
B2	2	500-140-01760 Flange,Vanstone,6.0",Socket,PV
B3	60"	500-140-01720 Pipe,6.0",PVC 80
B4	4	500-140-00920 Elbow,90,6.0Fx6.0F,SxS,PVC80
B5	1	500-140-00060 Valve,Vacuum Relief 1/2"

GROUP D

SEE DRAWING 900-140-00009 FOR GROUP D DETAILS

TRAP HEIGHT ADJUSTMENT

THE SUMP OPERATING LEVEL IS ADJUSTED BY CHANGING THE HEIGHT OF THE DISCHARGE TRAP. THE TRAP IS TILTED AND HEIGHT MEASURED FROM BOTTOM OF SUMP TANK TO BOTTOM OF UPPER MOST HORIZONTAL PIPE. THE DIMENSION INDICATES THE INITIAL FACTORY ADJUSTMENT. THE GOAL IS TO KEEP 4 TO 6" OF WATER IN THE SUMP DURING NORMAL OPERATION. AIR SHOULD NEVER BLOW OUT OF TRAP.

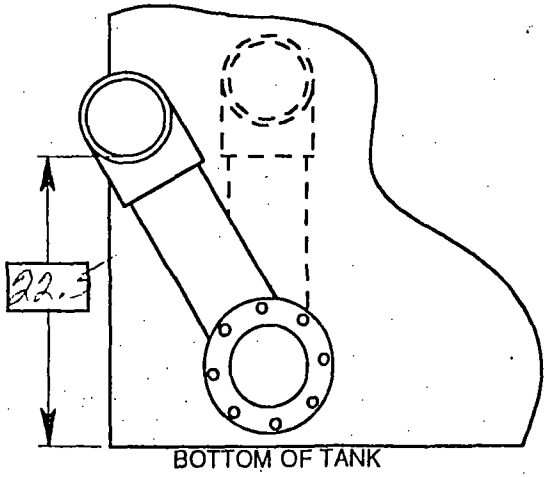

NORTH EAST ENVIRONMENTAL PRODUCTS, INC.
17 TECHNOLOGY DRIVE
WEST LEBANON, NEW HAMPSHIRE 03784

TITLE: 3600 OUTLET PLUMBING (GRAVITY) DISCHARGE TRAP

SIZE	DWG NO.	SHEET	REV
A	900-140-00035	1 OF 1	A

SCALE		DRAWN	DATE
NONE	DO NOT SCALE DRAWING	RC	6/28/96

AIR PRESSURE GAGE

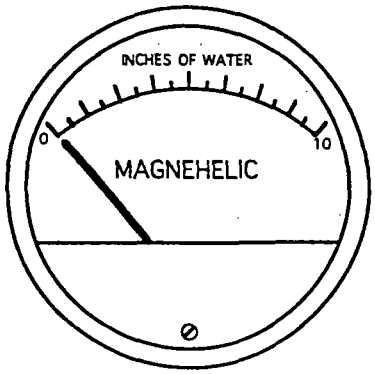

NOTES

1 PRESSURE LINE SHUT-OFF VALVE SHOULD BE CLOSED UNTIL A READING IS NEEDED. THIS WILL PREVENT CONDENSATION FROM BUILDING UP AND FLOODING THE GAGE.

☑ **PRESSURE SYSTEM**
CONNECT HOSEBARB AND TUBING TO HIGH PRESSURE PORT ON GAGE. LEAVE LOW PRESSURE PORT OPEN TO ATMOSPHERE. CONNECT AT AIR STRIPPER SUMP TANK.

☐ **VACUUM SYSTEM**
CONNECT HOSEBARB AND TUBING TO LOW PRESSURE PORT ON GAGE. LEAVE HIGH PRESSURE PORT OPEN TO ATMOSPHERE. CONNECT AT AIR STRIPPER STACK.

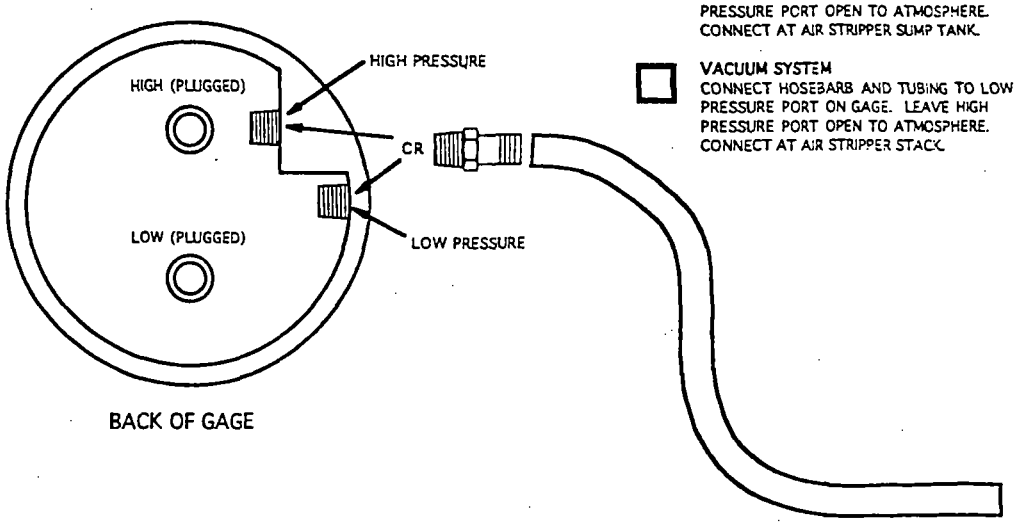

BACK OF GAGE

☐ **200-130-00209 Air pressure gauge SUB 0-5"wc**
•1 500-130-00035 Gauge,Air Pressure,0-5"WC
•4' 500-200-00145 Tubing Air3/16IDx5/16OD

☐ **200-130-00210 Air pressure gauge SUB 0-10"wc**
•1 500-130-00040 Gauge Air Pressure, 0-10"WC
•4' 500-200-00145 Tubing Air3/16IDx5/16OD

☐ **200-130-00211 Air pressure gauge SUB 0-15"wc**
•1 500-130-00050 Gauge Air Pressure0-15"WC
•4' 500-200-00145 Tubing Air3/16IDx5/16OD

☐ **200-130-00212 Air pressure gauge SUB 0-20"wc**
•1 500-130-00060 Gauge Air Pressure0-20"WC
•4' 500-200-00145 Tubing Air3/16IDx5/16OD

☐ **200-130-00213 Air pressure gauge SUB 0-30"wc**
•1 500-130-00065 Gauge Air Pressure 0-30"
•4' 500-200-00145 Tubing Air3/16IDx5/16OD

☑ **200-130-00214 Air pressure gauge SUB 0-40"wc**
•1 500-130-00066 Gauge, Air Pressure,0-40"WC
•4' 500-200-00145 Tubing Air3/16IDx5/16OD

☐ **200-130-00215 Air pressure gauge SUB 0-60"wc**
•1 500-130-00068 Gauge,Air Pressure,0-60"wc
•4' 500-200-00145 Hose,3/16id x 5/16od,Tygon,cle

NORTH EAST ENVIRONMENTAL PRODUCTS, INC.
17 TECHNOLOGY DRIVE
WEST LEBANON, NEW HAMPSHIRE 03784

AIR PRESSURE GAGE

SIZE	DWG NO	SHEET	REV
A	900-130-00012	1 of 1	Ø
SCALE: NONE	DO NOT SCALE DRAWING	DRAWN: RC	DATE: 10-31-94

LOW AIR PRESSURE/VACUUM SWITCH

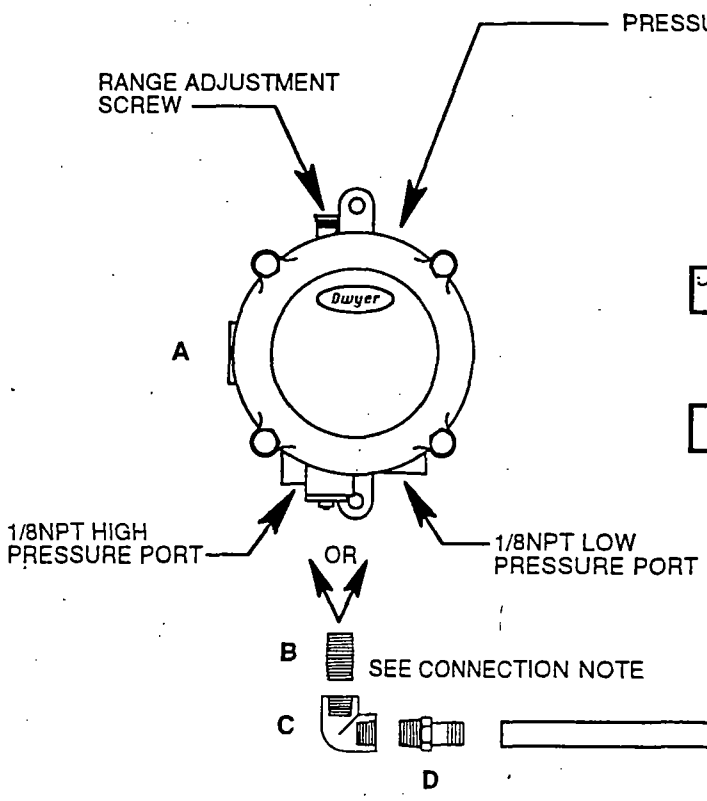

CONNECTION NOTE

☐ **LOW AIR PRESSURE SYSTEM**
CONNECT FITTINGS TO HIGH PESSURE PORT OF PRESSURE DIFFERENTIAL SWITCH, LEAVE LOW PRESSURE PORT OPEN.
STRIPPER CONNECTION ON SUMP TANK

☐ **LOW VACUUM SYSTEM**
CONNECT FITTINGS TO LOW PESSURE PORT OF PRESSURE DIFFERENTIAL SWITCH, LEAVE HIGH PRESSURE PORT OPEN.
STRIPPER CONNECTION ON STACK

200-130-00201 LOW press/vac switch .4-1.6"wc

A 500-130-00070 Switch Air Pressure, .4-1.6" WC
B 500-140-02960 Nipple,.125xClose,TxT,Brass
C 500-140-02490 Elbow,90,.125Fx.125F,TxT,Brass
E 500-200-00145 Hose,3/16id x 5/16od,Tygon,cle

TO AIR STRIPPER
SEE CONNECTION NOTE

NORTH EAST ENVIRONMENTAL PRODUCTS, INC.
17 TECHNOLOGY DRIVE
WEST LEBANON, NEW HAMPSHIRE 03784

TITLE: LOW AIR PRESSURE/VACUUM SWITCH

SIZE	DWG NO.	SHEET	REV
A	900-130-00011	1 OF 1	Ø

SCALE		DRAWN	DATE
NONE	DO NOT SCALE DRAWING	RC/MS	9-22-94

FLOAT SWITCH

MECHANICAL

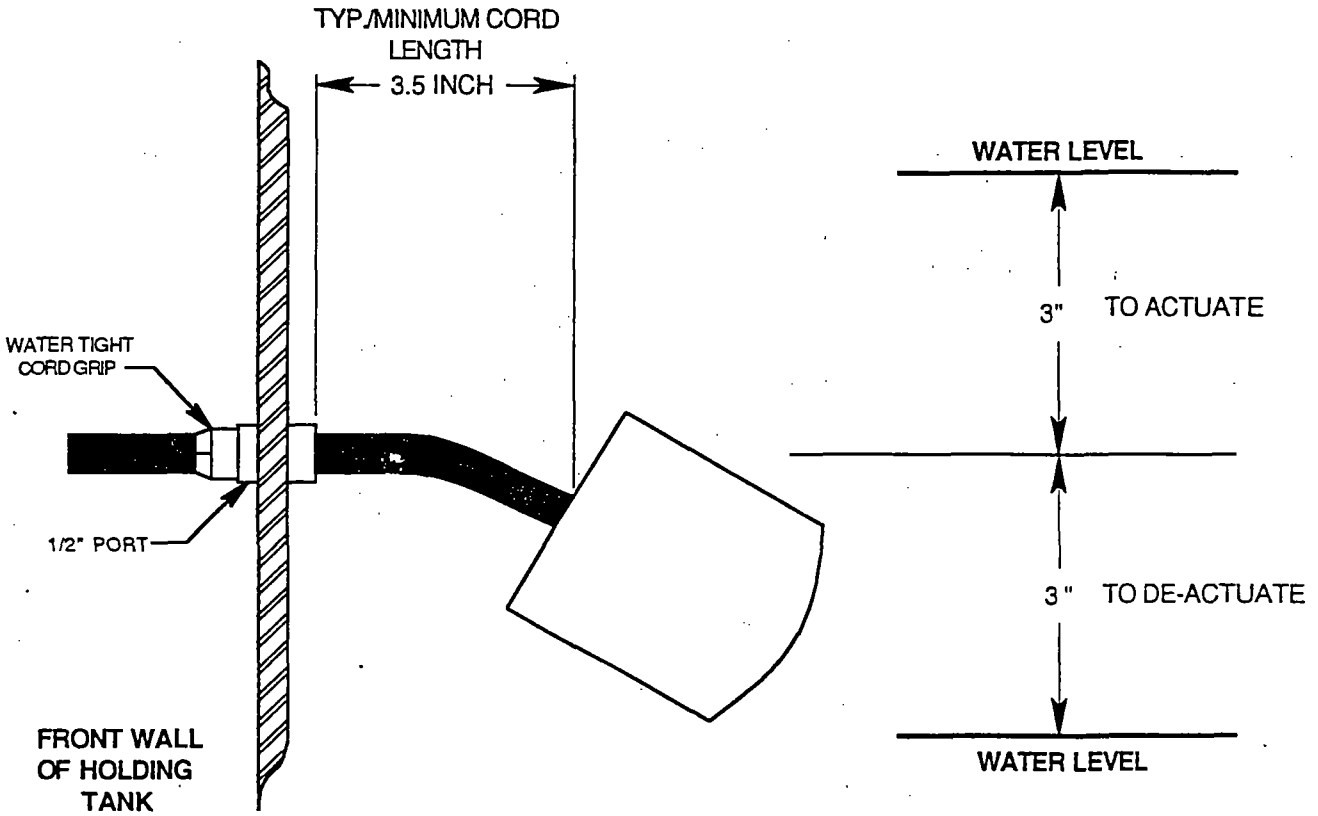

2	**200-120-00310 FLOAT SWITCH, N.O., 10' CORD** 1 500-120-02521 Switch,float,N.O.,mech,10ft cord 1 500-120-02490 Cord,Watertight,1/2",Bulkhead
1	**200-120-00311 FLOAT SWITCH, N.C., 10' CORD** 1 500-120-02522 Switch,float,N.C.,mech,10ft cord 1 500-120-02490 Cord,Watertight,1/2",Bulkhead

NOTE:
WATER TIGHT CORD GRIP TO BE MOUNTED INSIDE THE TANK FOR EXP UNITS.

	EXP MOUNT CORD GRIP INSIDE TANK
✓	TEFC MOUNT CORD GRIP OUTSIDE TANK

SEE COUPLING LAYOUT FOR SWITCH LOCATION.

NORTH EAST ENVIRONMENTAL PRODUCTS, INC.
17 TECHNOLOGY DRIVE
WEST LEBANON, NH 03784
(603)-298-7061

TOLERANCES UNLESS OTHERWISE SPECIFIED ±.060 In.	DRAWING NAME: FLOAT SWITCH (MECHANICAL)		
DRAWN BY: MS	DRAWING #: 900-120-00029		
DATE: 8/31/94	SHEET: 1 OF: 1	SIZE: A	
RC - 3/14/95	DRAWING SCALE: 20 TO 1		

PARTS LIST

A	500-140-00110 Nozzle,MEG,1/4",25,05
B	500-140-00075 Elbow,90,.25Fx.25F,90,TxT,galv
C	500-140-00085 Wand Washer Extension,36"
D	500-140-00115 Coupling,.25fx.25f,,txt,galv
E	500-140-00086 Wand Washer Extension,72"
F	200-140-00035 Wheel assembly
G	500-140-04320 Nipple ø1/4" x 3" long, black steel
H	500-140-04330 Tee 1/4" black steel

SELECT ONE

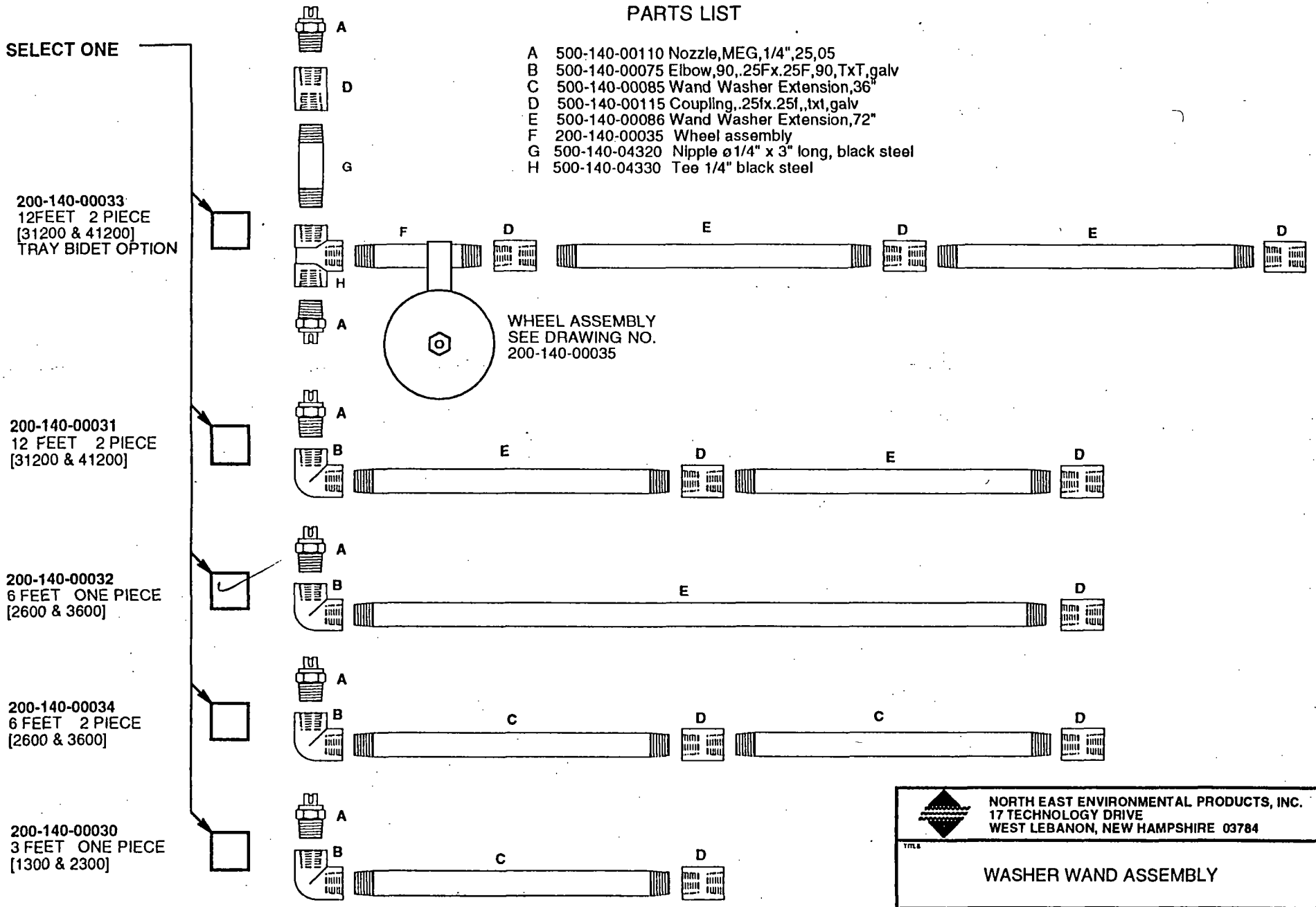

NORTH EAST ENVIRONMENTAL PRODUCTS, INC.
17 TECHNOLOGY DRIVE
WEST LEBANON, NEW HAMPSHIRE 03784

TITLE: WASHER WAND ASSEMBLY

SIZE	DWG NO.	SHEET	REV
A	900-140-00110	1 OF 1	A

SCALE		DRAWN	DATE
NONE	DO NOT SCALE DRAWING	RC	1-8-96

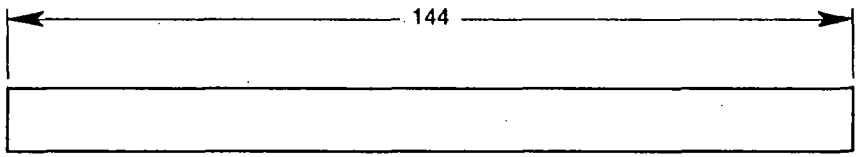

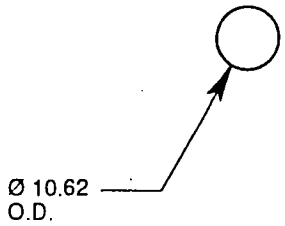

P/N 500-200-00850

NOTES

1 ALL DIMENSIONS ARE IN INCHES
2 DEBURR ALL EDGES
3 MATERIAL 304L SST 14G SHEETMETAL

NORTH EAST ENVIRONMENTAL PRODUCTS, INC.
17 TECHNOLOGY DRIVE
WEST LEBANON, NEW HAMPSHIRE 03784

TITLE

SST EXHAUST DUCT

SIZE	DWG NO.	SHEET	REV
A	4939 DUCT	1 OF 1	Ø

SCALE		DRAWN	DATE
NONE	DO NOT SCALE DRAWING	RC	2/17/97

AS-100 AIR STRIPPER	P/N 500-200-00860
B-100 BLOWER	P/N 500-200-00861
BM-100 BLOWER MOTOR	P/N 500-200-00862
PI-112 AIR PRESSURE GAUGE	P/N 500-200-00863
FSL-113 LOW AIR PRESSURE ALARM SWITCH	P/N 500-200-00864
LSH-111 HIGH WATER LEVEL ALARM SWITCH	P/N 500-200-00865

MATERIAL: SST SHEETMETAL, 304L

LETTERING: 1/4" HIGH, EMBOSSED OR STAMPED

DEBURR ALL SHARP EDGES

NORTH EAST ENVIRONMENTAL PRODUCTS, INC.
17 TECHNOLOGY DRIVE
WEST LEBANON, NEW HAMPSHIRE 03784

TITLE: **EQUIPMENT & INSTRUMENT TAGS**

SIZE	DWG NO.		SHEET	REV
A	4939 TAGS		1 OF 1	Ø
SCALE 1:1	DO NOT SCALE DRAWING	DRAWN RC	DATE 2-17-97	

CHOOSE ONE SIGHT TUBE.
(NOTE THAT BRASS SIGHT TUBES ARE ALREADY PART OF THE BASE SUBASSEMBLY, AND THE STAINLESS SIGHT TUBE SUBS ARE AN OPTION).

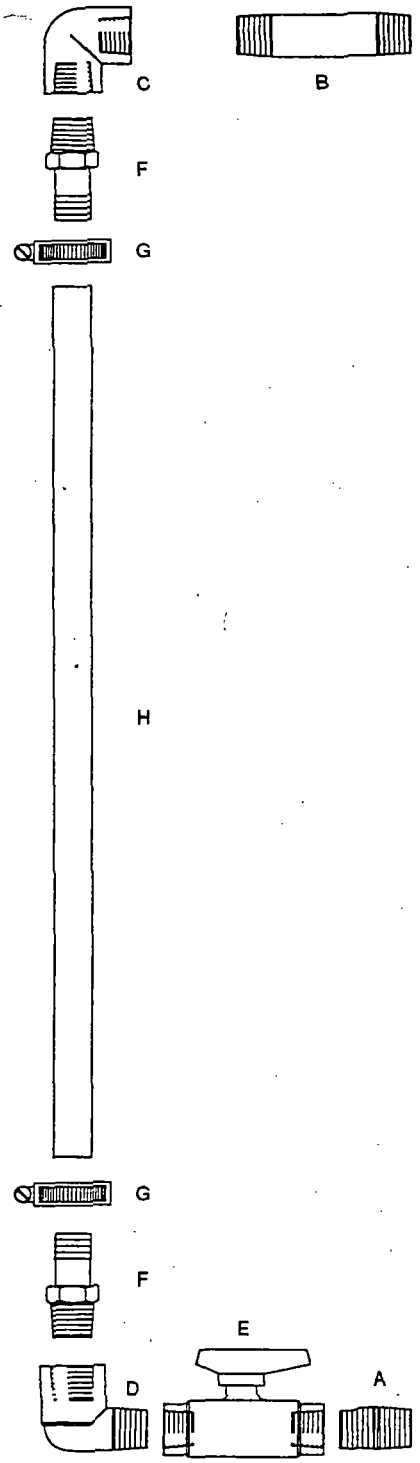

BRASS
(STANDARD)

☑ **200-140-00010**
SIGHT TUBE, BRASS, FOR 1300/2300/2600/3600

1	A	500-140-02980, NIPPLE, .5XCLOSE, TXT, BRASS
1	B	500-140-03030, NIPPLE, .5X3.5L, TXT, BRASS
1	C	500-140-02510, ELBOW, 90°, .5FX.5F, TXT, BRASS
1	D	500-140-02520, ELBOW, STREET, 90°, .5FX.5M, TXT, BRASS
1	E	500-140-02740, VALVE, BALL, .5FX.5F, TXT, BRASS
2	F	500-140-02890, HOSE BARB, .5MX.5M, TXB, BRASS
2	G	500-140-00030, HOSE CLAMP, .41-.88, SS
21"	H	500-200-00150, TUBE, CLEAR, .5 ID, TYGON

☐ **200-140-00020**
SIGHT TUBE, BRASS, FOR 31200/41200

1	A	500-140-02980, NIPPLE, .5XCLOSE, TXT, BRASS
1	B	500-140-03030, NIPPLE, .5X3.5L, TXT, BRASS
1	C	500-140-02510, ELBOW, 90°, .5FX.5F, TXT, BRASS
1	D	500-140-02520, ELBOW, STREET, 90°, .5FX.5M, TXT, BRASS
1	E	500-140-02740, VALVE, BALL, .5FX.5F, TXT, BRASS
2	F	500-140-02890, HOSE BARB, .5MX.5M, TXB, BRASS
2	G	500-140-00030, HOSE CLAMP, .41-.88, SS
29"	H	500-200-00150, TUBE, CLEAR, .5 ID, TYGON

STAINLESS STEEL
(OPTIONAL)

☐ **200-140-00011**
SIGHT TUBE, 316 ST. STEEL, FOR 1300/2300/2600/3600

1	A	500-140-04010, NIPPLE, .5XCLOSE, TXT, 316SS
1	B	500-140-04012, NIPPLE, .5X3.5L, TXT, 316SS
1	C	500-140-03995, ELBOW, 90°, .5FX.5F, TXT, 316SS
1	D	500-140-03996, ELBOW, STREET, 90°, .5FX.5M, TXT, 316SS
1	E	500-140-04030, VALVE, BALL, .5FX.5F, TXT, 316SS
2	F	500-140-04000, HOSE BARB, .5MX.5M, TXB, 316SS
2	G	500-140-00030, HOSE CLAMP, .41-.88, SS
21"	H	500-200-00151, TUBE, CLEAR, .5 ID, TEFLON

☐ **200-140-00021**
SIGHT TUBE, 316 ST. STEEL, FOR 31200/41200

1	A	500-140-04010, NIPPLE, .5XCLOSE, TXT, 316SS
1	B	500-140-04012, NIPPLE, .5X3.5L, TXT, 316SS
1	C	500-140-03995, ELBOW, 90°, .5FX.5F, TXT, 316SS
1	D	500-140-03996, ELBOW, STREET, 90°, .5FX.5M, TXT, 316SS
1	E	500-140-04030, VALVE, BALL, .5FX.5F, TXT, 316SS
2	F	500-140-04000, HOSE BARB, .5MX.5M, TXB, 316SS
2	G	500-140-00030, HOSE CLAMP, .41-.88, SS
29"	H	500-200-00150, TUBE, CLEAR, .5 ID, TYGON

NORTH EAST ENVIRONMENTAL PRODUCTS, INC.
17 TECHNOLOGY DRIVE
WEST LEBANON, NEW HAMPSHIRE 03784

TITLE: SIGHT TUBE SUBASSEMBY			
SIZE: A	DWG NO: 900-140-00044	SCALE: 1 = 1	REV: B
SCALE: NONE	DO NOT SCALE DRAWING	DRAWN: RC	DATE: 9/16/96

CHOOSE ONE ' .IN VALVE.
(NOTE THAT BRASS DRAIN VALVES ARE ALREADY PART OF THE BASE SUBASSEMBLY, AND THE STAINLESS DRAIN VALVE SUBS ARE AN OPTION).

BRASS
(STANDARD)

☑ **200-140-00142**
DRAIN VALVE, BRASS, 1", FOR 13/23/26/36

1	A	500-140-03060, NIPPLE, 1.0XCLOSE, TXT, BRASS
1	B	500-140-02780, VALVE, BALL,1.0FX1.0F, TXT, BRASS

☐ **200-140-00141**
DRAIN VALVE, BRASS, 2", FOR 312/412

1	A	500-140-03250, NIPPLE, 2.0XCLOSE, TXT, BRASS
1	B	500-140-02760, VALVE, BALL,2.0FX2.0F, TXT, BRASS

316 STAINLESS STEEL
(OPTIONAL)

☐ **200-140-00145**
DRAIN VALVE, 316 ST. STEEL, 1/2", FOR 1300P

1	A	500-140-04010, NIPPLE, .5XCLOSE, TXT, 316SS
1	B	500-140-04030, VALVE, BALL, .5FX.5F, TXT, 316SS

☐ **200-140-00148**
DRAIN VALVE, 316 ST. STEEL, 3/4", FOR 2300P

1	A	500-140-04011, NIPPLE, .75XCLOSE, TXT, 316SS
1	B	500-140-04031, VALVE, BALL, .75FX.75F, TXT, 316SS

☐ **200-140-00140**
DRAIN VALVE, 316 ST. STEEL, 1", FOR 13/23/26/36

1	A	500-140-04014, NIPPLE, 1.0XCLOSE, TXT, 316SS
1	B	500-140-04032, VALVE, BALL,1.0FX1.0F, TXT, 316SS

☐ **200-140-00147**
DRAIN VALVE, 316 ST. STEEL, 2", FOR 312/412

1	A	500-140-04022, NIPPLE, 2.0XCLOSE, TXT, 316SS
1	B	500-140-04035, VALVE, BALL,2.0FX2.0F, TXT, 316SS

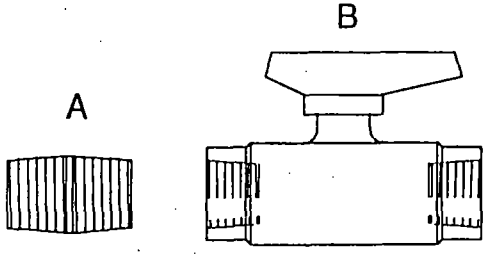

NORTH EAST ENVIRONMENTAL PRODUCTS, INC.
17 TECHNOLOGY DRIVE
WEST LEBANON, NEW HAMPSHIRE 03784

DRAIN VALVE SUBASSEMBY

SIZE	DWG NO.	SHEET	REV
A	900-140-00045	1 of 1	A

AERATION PROCESS, COUNTER-CURRENT AIR AND WATER FLOW

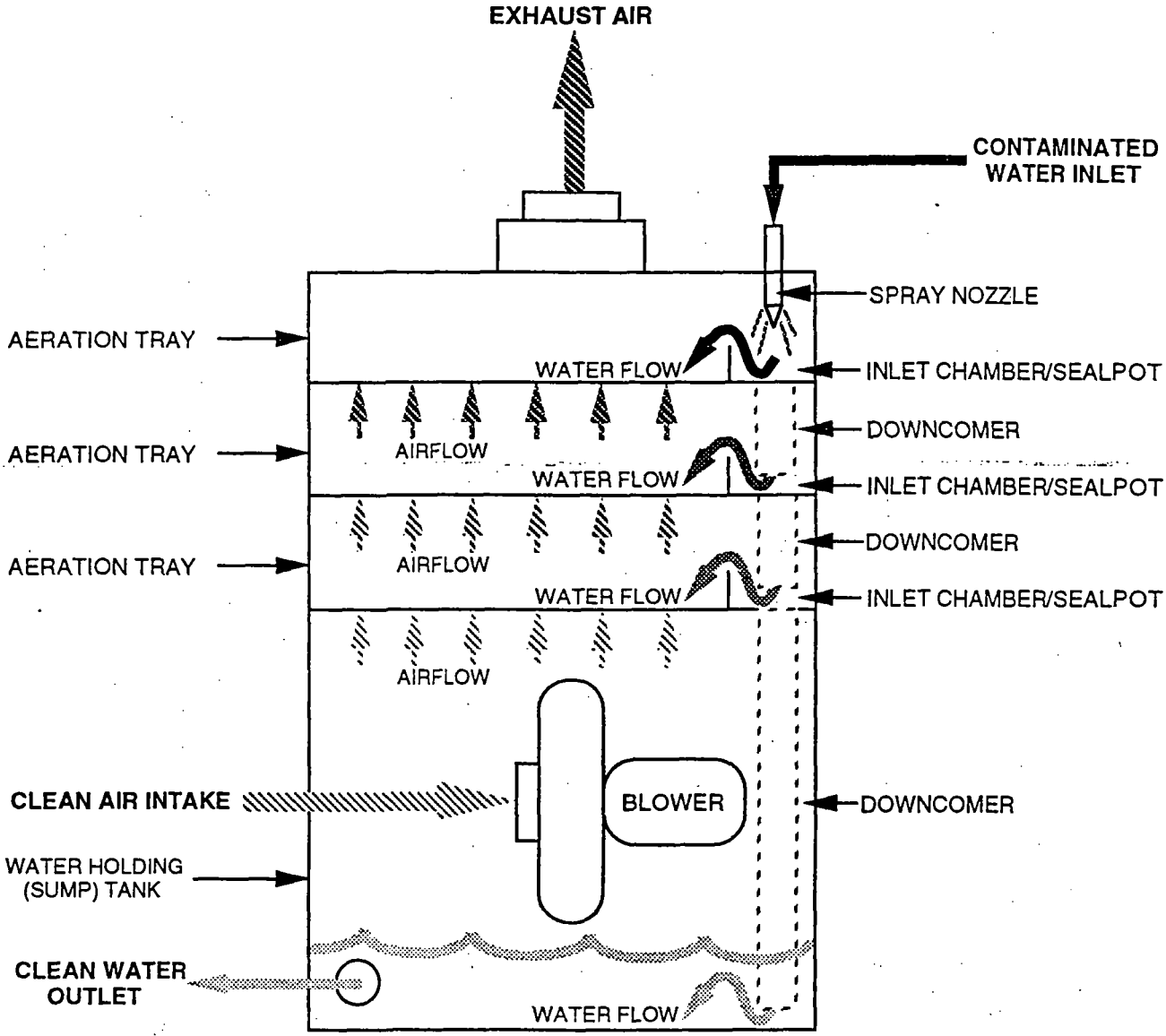

FOR REFERENCE ONLY !

DO NOT ASSEMBLE PER THIS DRAWING. SEE DRAWINGS THAT ARE SPECIFIC TO THIS UNIT.

NORTH EAST ENVIRONMENTAL PRODUCTS, INC.
17 TECHNOLOGY DRIVE
WEST LEBANON, NH 03784
(603) 298-7061

TOLERANCES UNLESS OTHERWISE SPECIFIED ±1 in.	DRAWING NAME: AERATION PROCESS		
	DRAWING #: 900-200-00003		
DRAWN: MS DATE: 1/11/93	CUSTOMER:		
REV: A 3/9/94	SCALE:	SIZE: A	SHEET : OF:

TYPICAL VENT LINE INSTALLATION

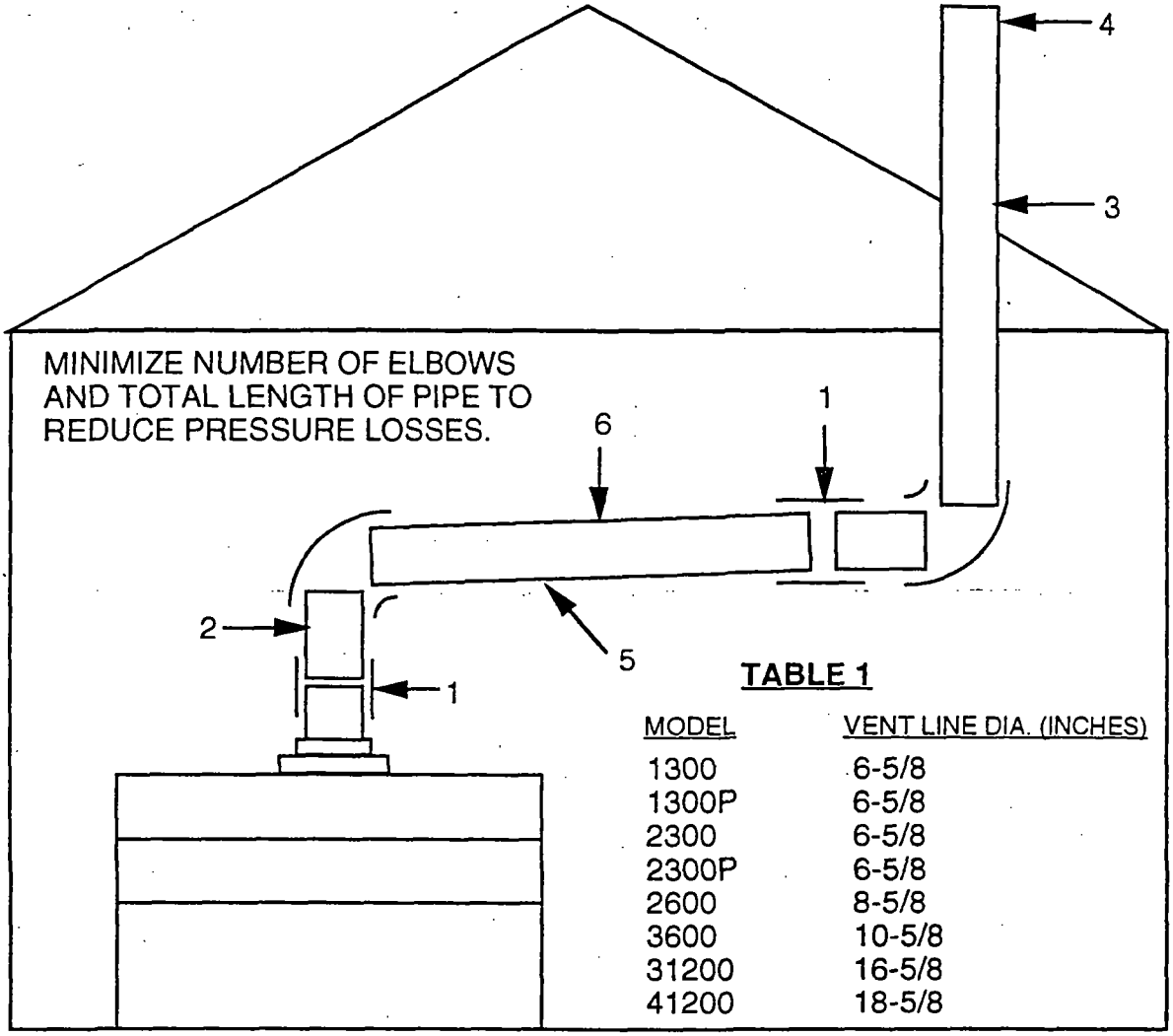

TABLE 1

MODEL	VENT LINE DIA. (INCHES)
1300	6-5/8
1300P	6-5/8
2300	6-5/8
2300P	6-5/8
2600	8-5/8
3600	10-5/8
31200	16-5/8
41200	18-5/8

NOTES:

1. RUBBER COUPLING WITH STAINLESS STEEL RING CLAMPS.
2. VENT LINE PIPE DIAMETER MUST BE EQUAL TO OR GREATER THAN THE AIR EXHAUST VENT DIAMETER ON THE AIR STRIPPER COVER.
3. FIRMLY SUPPORT PIPE AT ROOF PENETRATION.
4. FOR INTERMITTENT OPERATION, INSTALL WIRE MESH OF 1/4" (OR LARGER). FOR DRINKING WATER SUPPLY, INSTALL ELBOW WITH WIRE MESH.
5. ALLOW CLEARANCE FOR REMOVING SECTION OF VENT LINE FOR EASY ACCESS TO AERATION TRAYS.
6. PITCH VENT LINE TOWARD SHALLOW TRAY UNIT.
7. USE PIPING THAT HAS ADEQUATE STRENGTH (PRESSURE OR VACUUM) SPECIFICATIONS, AND THAT IS OF SUITABLE MATERIAL.

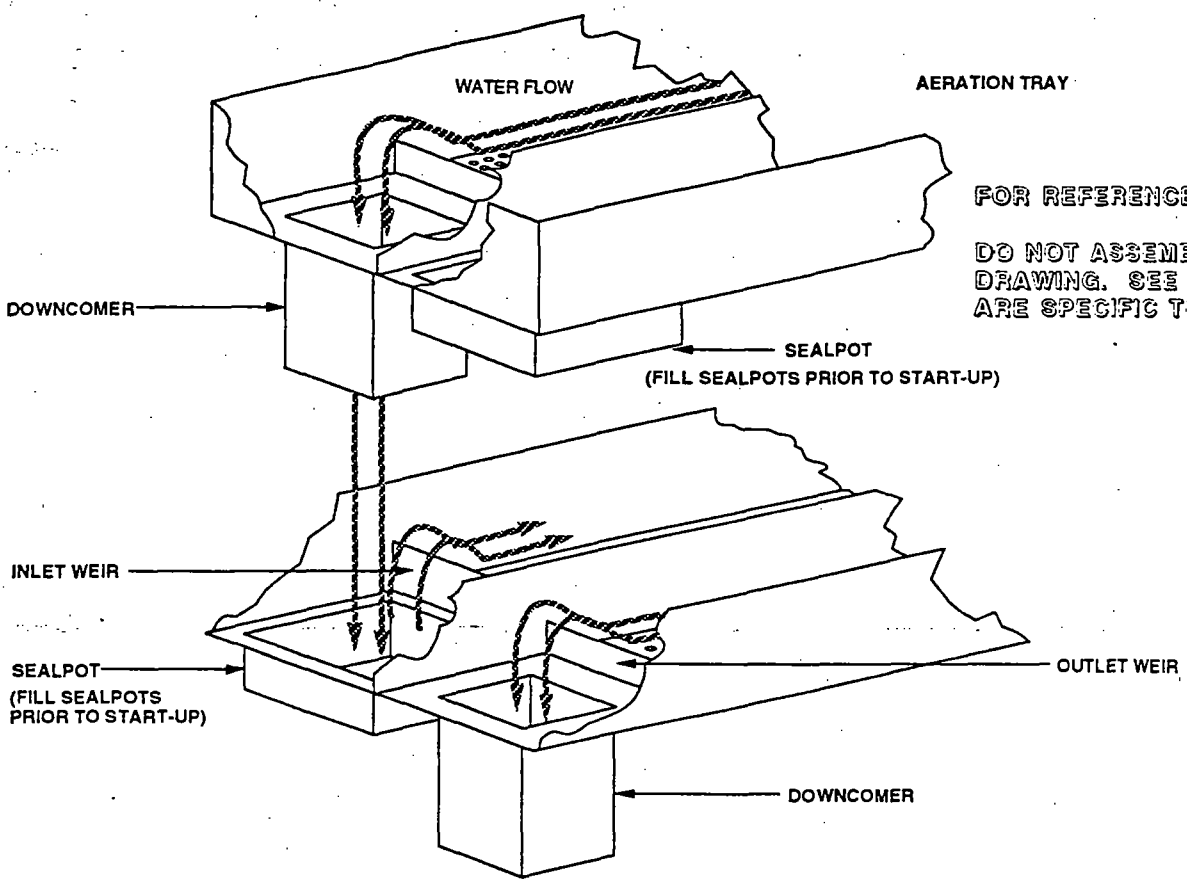

FOR REFERENCE ONLY !

DO NOT ASSEMBLE PER THIS DRAWING. SEE DRAWINGS THAT ARE SPECIFIC TO THIS UNIT.

CAUTION!

SEALPOT MUST BE FILLED WITH WATER TO CREATE WATER SEAL.

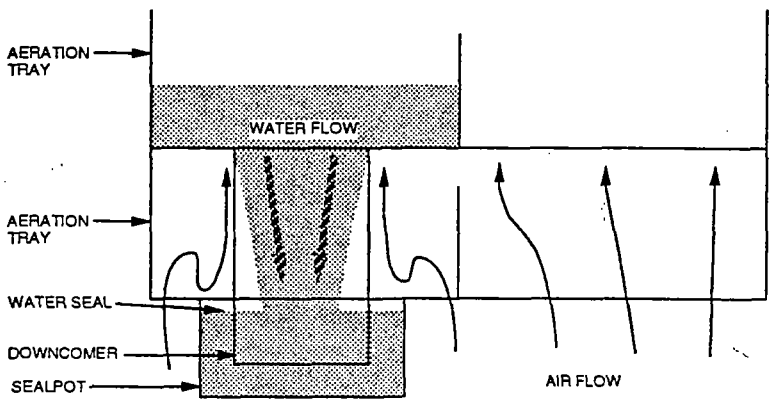

FILLED SEALPOT

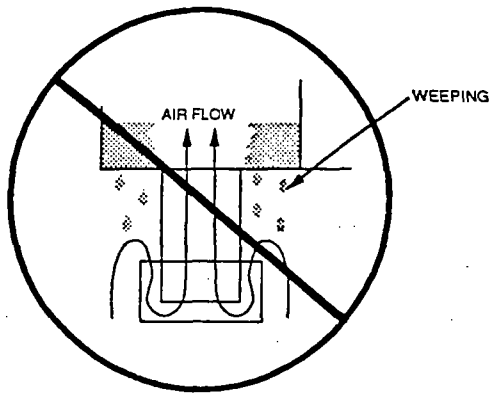

UNFILLED SEALPOT

1. EACH AERATION TRAY CONTAINS A SEALPOT. ALL SEALPOTS MUST BE FILLED WITH WATER TO FORM A WATER SEAL AROUND THE DOWNCOMERS.
2. IF SEALPOTS ARE NOT FILLED, AIR WILL TRAVEL UP THE DOWNCOMER AND PREVENT WATER FROM FLOWING DOWN THEM. THIS WILL CAUSE THE WATER TO WEEP THROUGH THE 3/16" AERATION HOLES ON THE BOTTOM OF EACH TRAY, RESULTING IN POOR REMOVAL EFFICIENCY.
3. THE SUMP TANK WATER LEVEL ACTS AS A WATER SEAL FOR THE BOTTOM TRAY DOWNCOMER. MAINTAIN AT LEAST 3" OF WATER IN THE SUMP TANK AT ALL TIMES.

SEALPOTS CAN BE FILLED MANUALLY, OR BY FOLLOWING THE PROCEDURES LISTED IN THE OPERATION AND MAINTENANCE MANUAL.

NORTH EAST ENVIRONMENTAL PRODUCTS, INC.
17 TECHNOLOGY DRIVE
WEST LEBANON, NH 03784
(603) 298-7061

TOLERANCES UNLESS OTHERWISE SPECIFIED ± 1 in.	DRAWING NAME: SEALPOTS		
	DRAWING #: 900-160-00061		
DRAWN: MS DATE: 11/19/92	CUSTOMER:		
REV: A 3/9/94	SCALE:	SIZE: A	SHEET: OF:

North East
Environmental Products, Inc.
17 Technology Drive West Lebanon NH 03784
(603) 298-7061 Fax (603) 298-7063

SHALLOWTRAY LOW CONTAMINANT REMOVAL QUESTIONS

1. Have the trays been taken apart? Are they put back together as from our factory, i.e., nozzle over sealpot, downcomers from each tray underwater in the sealpot of the tray below?
2. What is the sump tank air pressure reading? Is it steady, slowly changing over time, or rapidly fluctuating?
3. What is the air flow rate through the stripper? How is it measured? Where is the sensor mounted?
4. What is the air intake and exhaust piping design (size of ducts, number of elbows, length of pipe run, GAC, heaters, other restrictions)?
5. Are sample ports installed on each tray to verify per-tray removal efficiency?
6. Is sump tank contaminated? Where are effluent samples effluent taken from?
7. Are sample ports purged for 30 seconds-1 minute before taking sample?
8. Are samples being taken, stored, and tested per approved methods?
9. Are seal pots on each tray full of water?
10. Does the sump tank have at least 4 inches of water at all times?
11. Is the water suction elbow in the tank pointing down and always underwater?
12. What is the inlet water temperature?
13. What else is in the water besides the contaminants in question?
14. Are there occasional slugs of free product, or much higher than normal contaminant concentrations that could sneak into the stripper?
15. Is inlet water supplied as a continuous stream (as from an electric pump), or is the flow pulsed (as from a pneumatic pump)?
16. Are there surfactants, detergents, greases, fats, etc. in the water that are causing foaming in the stripper?
17. Is there equipment near the blower intake that could be contaminating the air?
18. Has the air entering the blower been tested for abscence of VOCs?
19. How far away from each other are the air intake and air exhaust points? Is the air intake downwind or upwind from the exhaust? Is it possible for contaminated air to be sucked back into the stripper air intake?
20. Is the blower spinning in the correct direction (top of blower wheel spinning towards tank)? Watch wheel when it is almost stopped.
21. Is there air coming out of the discharge piping?
22. Is outlet piping siphoning all water out of the sump tank, until it sucks air from tank?
23. What is the outlet plumbing design (gravity discharge, pumped discharge, uphill, downhill, other equipment in-line, size of piping, etc.)?
24. What do the bubbles look like in each tray? Install temporary windows to see.
25. Are the undersides of the trays free of drips and drizzles?
26. Are tray holes at all closed up or plugged? Is there any scaling or fouling on the trays?
27. Is the system level?
28. When shutting system down, is inlet water shut off, blower allowed to operate for an additional 5 minutes, then blower shut off?

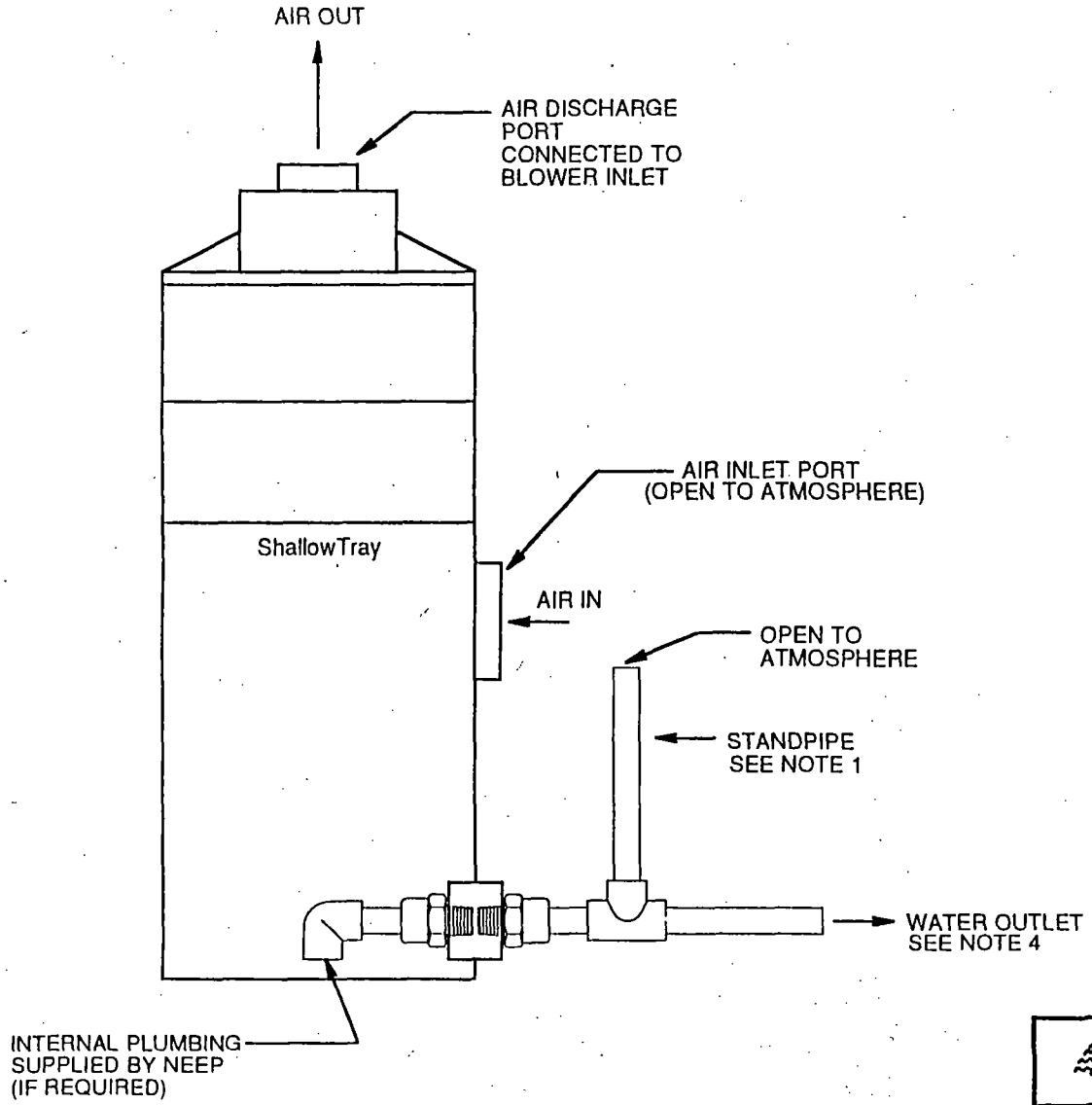

NOTES

1. HEIGHT TO TOP OF STANDPIPE SHOULD BE 1" HIGHER THAN LOWEST POINT ON AIR INLET PORT.
2. DO NOT USE THIS SETUP IF PUMPING OUT OF ShallowTray.
3. DISHARGE PIPING SHALL BE GREATER THAN OR SAME SIZE AS WATER DISCHARGE PORT.
4. PIPING RUN MUST PITCH AWAY FROM STRIPPER.

DRAWING FOR REFERENCE ONLY DO NOT ASSEMBLY PER THIS DRAWING. SEE DRAWINGS THAT ARE SPECIFIC TO THIS UNIT.

NORTH EAST ENVIRONMENTAL PRODUCTS, INC.
17 TECHNOLOGY DRIVE
WEST LEBANON, NEW HAMPSHIRE 03784

TITLE

RECOMMENDED GRAVITY DISCHARGE SETUP FOR INDUCED DRAFT SYSTEMS

SIZE	DWG NO	SHEET	REV
A	900-140-00003	1 OF 1	Ø

SCALE		DRAWN	DATE
NONE	DO NOT SCALE DRAWING	RC	7-7-95

GRAVITY DISCHARGE TRAP SET-UP (SEE NOTE 6)

1. VERTICAL TRAP HEIGHT SHOULD BE SET SO THAT THE SYSTEM MAINTAINS A SUMP TANK WATER LEVEL OF 4-5 INCHES (FROM THE BOTTOM OF THE SUMP TANK) DURING NORMAL OPERATION.
2. THE 4-5 INCH WATER LEVEL ALLOWS THE HIGH LEVEL ALARM SWITCH TO RESET AND ALSO FORMS A WATER SEAL AROUND THE BOTTOM TRAY DOWNCOMER AND THE EFFLUENT WATER LINE. THIS PREVENTS AIR FROM ESCAPING THROUGH THE EFFLUENT WATER LINE AND BOTTOM TRAY DOWNCOMER.
3. THE VACUUM RELIEF VALVE PREVENTS THE WATER FROM SIPHONING OUT THE EFFLUENT WATER LINE.
4. IF THE SUMP TANK WATER IS DEEPER THAN 4-5 INCHES WHEN THE STRIPPER IS IN OPERATION, THEN EITHER THE LINE SIZE IS TOO SMALL OR THERE IS SOME TYPE OF RESTRICTION IN THE LINE.
5. IF THE EFFLUENT LINE BECOMES FOULED, IT WILL REDUCE THE DIAMETER OF THE LINE AND CAUSE THE WATER LEVEL TO RISE.
6. **A TRAP IS NOT NEEDED IF THERE IS A DISCHARGE PUMP.**

FOR REFERENCE ONLY !

DO NOT ASSEMBLE PER THIS DRAWING. SEE DRAWINGS THAT ARE SPECIFIC TO THIS UNIT.

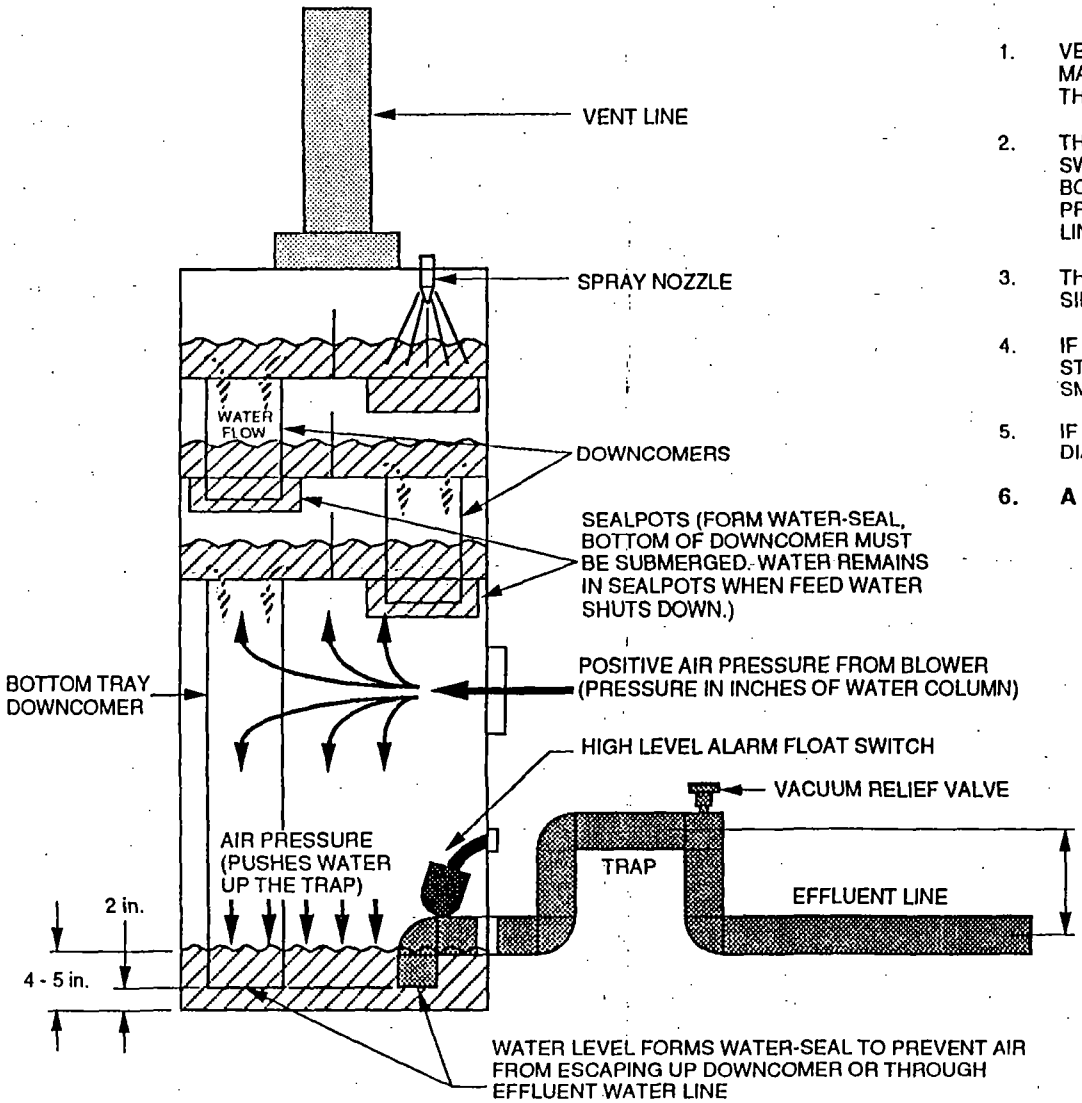

SIDE VIEW

SET HEIGHT OF INVERTED U-TRAP TO MAINTAIN 4-5 in. WATER LEVEL IN SUMP TANK DURING STRIPPER OPERATION

DO NOT USE THIS TRAP WHEN PUMPING OUT OF ShallowTray OR WITH INDUCED DRAFT SYSTEMS

NORTH EAST ENVIRONMENTAL PRODUCTS, INC.
17 TECHNOLOGY DRIVE
WEST LEBANON, NH 03784
(603) 298-7061

TOLERANCES UNLESS OTHERWISE SPECIFIED ± 1 In.	DRAWING NAME: GRAVITY DISCHARGE TRAP HEIGHT		
	DRAWING #: 900-140-00001		
DRAWN: MS	CUSTOMER:		
DATE: 11/8/93	SCALE:	SIZE: A	SHEET : OF :

SECTION 3

MAN 4002A00
English
February 1994

Filled Systems for Pressure Transmitters

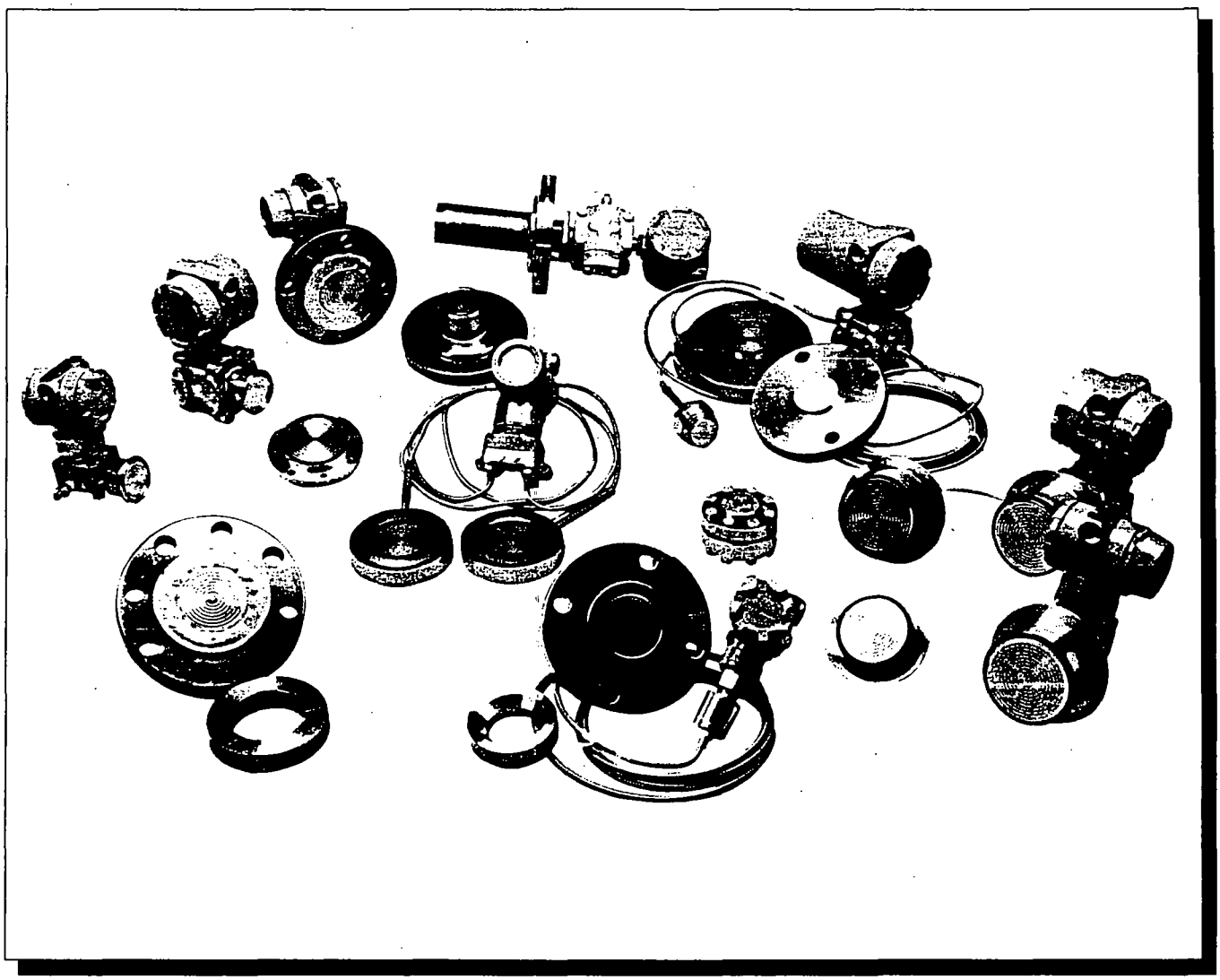

ROSEMOUNT® MEASUREMENT

FISHER-ROSEMOUNT™ Managing The Process Better.™

PRODUCT MANUAL

Filled Systems for Pressure Transmitters

NOTICE

Read this manual before working with the product. For personal and system safety, and for optimum product performance, make sure you thoroughly understand the contents before installing, using, or maintaining this product.

For equipment service needs outside the United States, contact the nearest Rosemount representative.

Within the United States, the Rosemount National Response Center is at your service 24 hours a day, and is a single-point contact for all Rosemount equipment service needs. If at any time you are not sure what to do, you have a question about using the product, or you have a service or support request, call the center toll free at 1-800-654-RSMT (7768). This contact is your fastest link to quick and complete answers about any Rosemount Group product or service.

⚠CAUTION

The products described in this document are NOT designed for nuclear applications.

Using non-nuclear qualified products in applications that require nuclear-qualified hardware or products may cause inaccurate readings.

For information on Rosemount nuclear-qualified products, contact your local Rosemount Sales Representative.

SNF-0004

Rosemount, the Rosemount logotype, Alphaline, and HART are registered trademarks of Rosemount Inc.
Viton and Teflon are registered trademarks of E.I. duPont de Nemours & Co.
Hastelloy, Hastelloy C, and Hastelloy C-276 are registered trademarks of Cabot Corp.
Syltherm, and D.C. are trademarks of Dow Corning Corp.
Tri-Clamp is a registered trademark of Tri-Clover, Inc. of the Alfa-Laval Group.
Thermotork is a registered trademark of Armstrong World Industries, Inc.
Neobee M-20 is a registered trademark of Stepan Chemical Co.
The 3-A symbol is a registered trademark of the 3-A Sanitary Standards Symbol Council.

Rosemount Inc.
Measurement Division
8200 Market Boulevard
Chanhassen, MN 55317 USA
Tel (612) 949-7000
Telex 4310012
Fax (612) 949-7001

ROSEMOUNT® MEASUREMENT

FISHER-ROSEMOUNT™ Managing The Process Better.™

Publication Number MAN 4002
© Rosemount Inc., 1990, 1994.
Printed in the USA

MODEL 1199

Table of Contents

SECTION 1

Filled Systems Overview 1-1
- Introduction 1-1
- Features 1-1
- Operation 1-2
- Remote Seal Selection 1-2
- Installation Considerations 1-3
  - Optimizing Performance 1-6
- Application Considerations 1-6
- Calculating Calibration 1-7
  - Single-Seal System with Transmitter Mounted Below the Seal 1-7
  - Single-Seal System with Transmitter Mounted Above the Seal 1-8
  - Transmitter with Two-Seal System 1-9
- Specifications 1-10
  - Functional Specifications 1-10
  - Performance Specifications 1-11
  - Physical Specifications 1-11
- Maintenance 1-12
- Return of Materials 1-12

SECTION 2

Transmitter Ordering Tables 2-1
- Ordering Information 2-1
- Model 1151 2-2
- Model 1151LT 2-4
- Model 3051C 2-7
- Model 3051L 2-10
- Model 2088 2-14

SECTION 3

Remote Diaphragm Seal Ordering Tables 3-1
- PFW 3-1
- FFW 3-2
- RFW 3-3
- EFW 3-4
- RTW 3-5
- CTW 3-6
- UCW 3-7
- SCW 3-8
- SSW 3-9
- SPUD 3-10
- TSW 3-11
- CAP 3-12
- CLC 3-13
- FILL 3-13

INDEX I-1

List of Illustrations

FIGURES

Figure	Title	Page
1-1.	Remote Seals and Transmitter Filled System	1-1
1-2.	Transmitter Mounting Diagram	1-3
1-3.	Typical Transmitter/Remote Diaphragm Seal Assembly Configurations	1-4
1-4.	Typical Transmitter/Remote Diaphragm Seal Assembly Configurations	1-5
1-5.	Mounting Transmitters	1-6
1-6.	Transmitter Mounted Below a Single Seal	1-7
1-7.	Transmitter Mounted Above a Single Seal	1-8
1-8.	Transmitter with Two Seals	1-9
3-1.	1199PFW Pancake Remote Seal	3-1
3-2.	Model 1199FFW Flush Flanged Remote Seal Assembly	3-2
3-3.	Model 1199RFW Flanged Remote Seal Assembly	3-3
3-4.	Model 1199EFW Extended Flanged Diaphragm Assembly	3-4
3-5.	Model 1199RTW Threaded Remote Seal Assembly	3-5
3-6.	Model 1199 CTW Chemical Tee Remote Seal Assembly	3-6
3-7.	Model 1199UCW Union Connection Seal	3-7
3-8.	Model 1199SCW Sanitary Tri-Clamp Remote Seal	3-8
3-9.	Model 1199SSW Sanitary Tank Spud Seal	3-9
3-10.	Model 1199SPUD Sanitary Tank Spud	3-10
3-11.	Model 1199TSW Sanitary Thin-Wall Remote Seal	3-11
3-12.	Model 1199CAP Capillary Tubing	3-12
3-13.	Model 1199CLC Close-Coupled Connection	3-13

Tables

Table	Title	Page
1-1.	Transmitter Span Limits	1-9
2-1.	Model 1151 Alphaline® Pressure Transmitter	2-2
2-2.	Model 1151 Alphaline Flange-Mounted Liquid Level Transmitter	2-4
2-3.	Models 3051CD and 3051CG Pressure Transmitters	2-6
2-4.	Model 3051L Flange-Mounted Liquid Level Transmitter	2-8
2-5.	Model 2088G Gage Pressure Transmitters	2-11
3-1.	Pancake Remote Seal	3-1
3-2.	Flush Flanged Remote Seal Assembly	3-2
3-3.	Flanged Remote Seal Assembly	3-3
3-4.	Extended Flanged Diaphragm Assembly	3-4
3-5.	Threaded Remote Seal Assembly	3-5
3-6.	Chemical Tee Remote Assembly	3-6
3-7.	Union Connection Seal	3-7
3-8.	Sanitary Tri-Clamp® Remote Seal	3-8
3-9.	Sanitary Tank Spud Seal	3-9
3-10.	Sanitary Tank Spud	3-10
3-11.	Sanitary Thin-Wall Level Remote Seal	3-11
3-12.	Capillary Tubing	3-12
3-13.	Close-Coupled Connection (for Model 1151 Only)	3-13
3-14.	Fill Fluid for Remote Seals	3-13

SECTION
1

Filled Systems Overview

INTRODUCTION

Model 1199 remote diaphragm seals can be assembled to Model 1151, 3051C, and 2088 pressure, differential pressure, and level transmitters. This product manual provides information on the diaphragm seals and their effects on transmitter performance. It supplements the product data sheets for the individual transmitters. Information regarding the transmitters may be found in the following product data sheets:

- Model 1151 Alphaline Pressure PDS 4360
- Model 1151LT Liquid Level PDS 4526
- Model 3051C Differential Pressure PDS 4622
- Model 3051C Gage Pressure PDS 4623
- Model 3051C Absolute Pressure PDS 4694
- Model 3051L Liquid Level PDS 4673
- Model 2088 Pressure Transmitter PDS 4690

Many special-order transmitter/seal configurations, materials, and fill fluids are available that are not covered in this document. Consult factory for additional information.

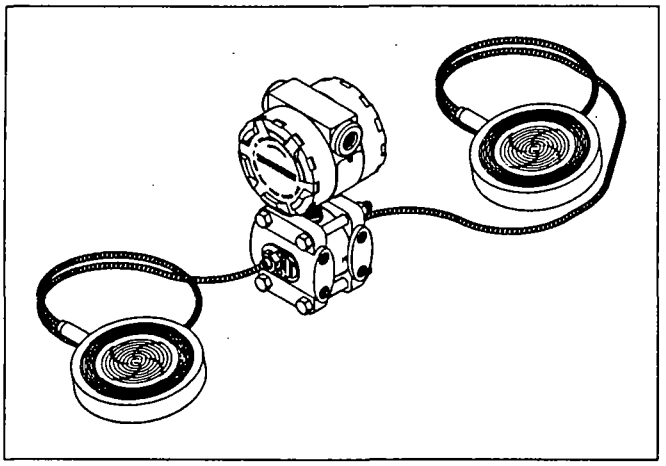

FIGURE 1-1. Remote Seals and Transmitter Filled System.

FEATURES

Pressure and differential pressure transmitters with remote diaphragm seals provide a reliable means of measuring process pressure while preventing the process medium from contacting the transmitter diaphragm itself.

Transmitter/remote seal systems should be considered where:

- the process medium will corrode the transmitter connection and pressure sensing element.
- the process medium contains suspended solids or is sufficiently viscous to clog the impulse piping.
- the process temperature is outside of the normal operating limits of the transmitter and cannot be brought into those limits with impulse piping.
- the process medium might freeze or solidify in the transmitter or impulse piping.
- the process medium needs to be flushed out of the process connections between batches.
- sanitary or aseptic conditions must be maintained.
- there is a need to eliminate the maintenance requirements associated with wet leg applications
- there is a need to make interface and density measurements.
- Model 1151, 3051C, and 2088 Transmitters each feature easy installation, commissioning, and maintenance. The transmitter ordering tables in this document list typical selections associated with filled systems. Consult the respective transmitter data sheets for a comprehensive listing of available options.

OPERATION

A remote diaphragm seal system consists of a pressure transmitter, a remote diaphragm, a connection between the remote diaphragm and transmitter, and a fill fluid. Seal systems act as a pressure transport medium between the process and the sensor of the transmitter. Figure 1-1 shows a typical configuration.

During operation, the thin, flexible diaphragm and fill fluid separate the pressure sensitive element of the transmitter from the process medium. The capillary tubing connects the remote diaphragm to the transmitter.

When process pressure is applied, the remote diaphragm is displaced, transmitting the measured pressure through the filled system, through the capillary tubing, to the transmitter element. This transmitted pressure displaces the sensing diaphragm in the pressure-sensitive element of the transmitter. This displacement is proportional to the process pressure and is converted electronically to an appropriate current, voltage, or digital HART (Highway Addressable Remote Transducer) output signal.

REMOTE SEAL SELECTION

Adding seals to transmitters can affect the overall transmitter performance. Carefully selecting the best seals, capillaries, and fill fluid can minimize these effects, maximize the overall performance of the assembly, and still meet the process demands. Consider the following criteria concerning selecting the different parts of a remote seal system:

- Select larger diameter diaphragms to minimize the temperature effects commonly associated with remote seals.
- Keep the capillary length as short as possible to reduce temperature effects and response time.
- In a two-seal system, use the same diaphragm size, capillary length, and fill fluid on each side of the transmitter.
- In vacuum applications, mount the transmitter at or below the lower tap. Consequently, make sure the capillary is long enough to accommodate this requirement.
- Select the fill fluid that suits the most extreme process conditions expected (highest temperature and lowest pressure) and is compatible with the process fluid in the event of contamination.

For further explanations of these and other aspects of seal selection, See *TDS 3064, A Guide to the Selection of Remote Diaphragm Seals* or contact your local Rosemount representative.

INSTALLATION CONSIDERATIONS

Process connections to Model 1199 Diaphragm Seals are available in threaded, flanged, and sanitary configurations. Flanged seals may be further broken down to flanges with lower housing, and pancake types. The seals are available in a variety of sizes and materials. Pancake seals are available only in the 3-inch size. Refer to the model number ordering information tables and corresponding diagrams for each type of seal.

When diaphragm seals are placed on pressure and differential pressure transmitters, consideration should be given to both the installation and the applications to ensure optimum performance. See Figure 1-2 for transmitter mounting diagrams.

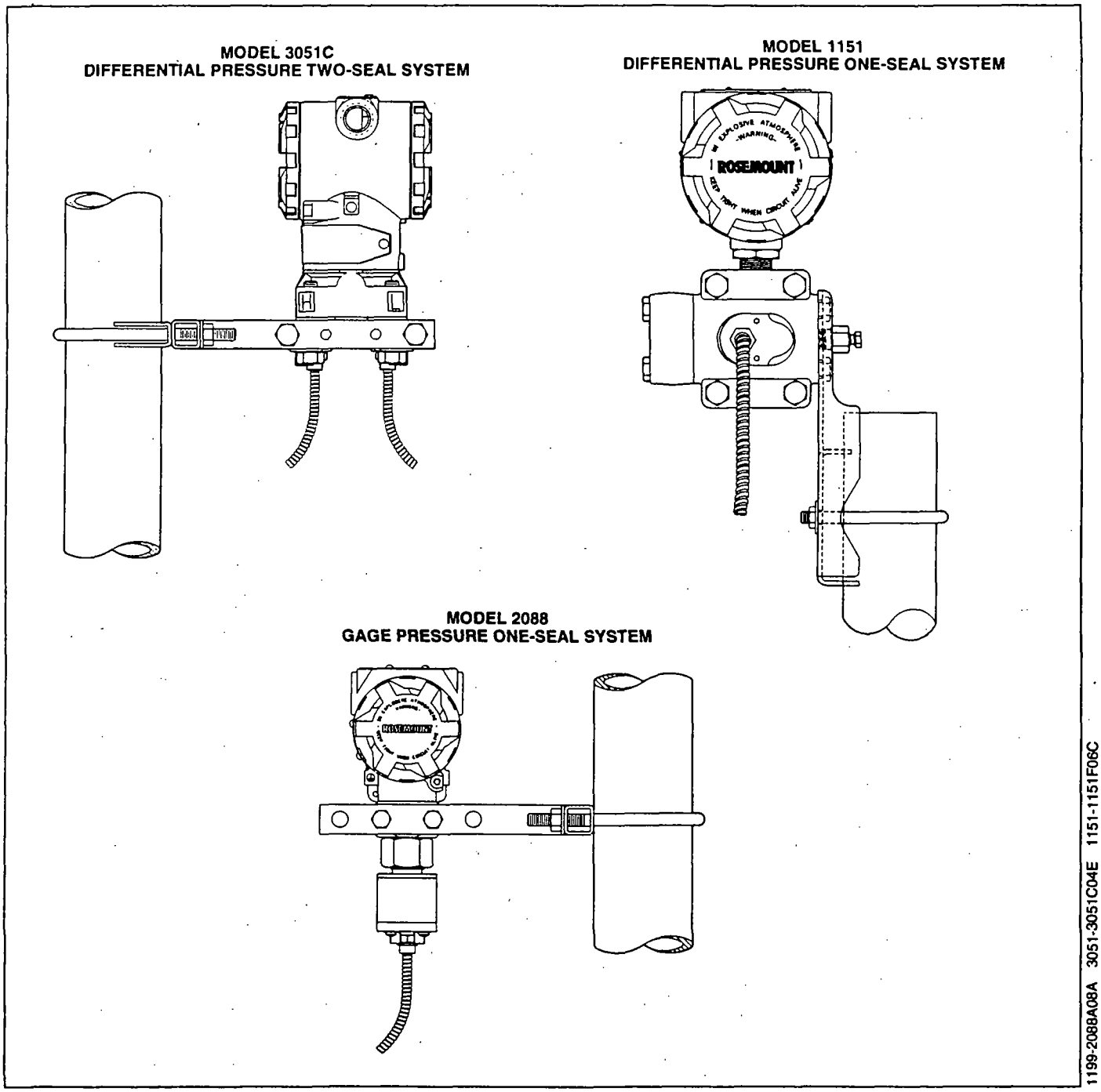

FIGURE 1-2. Transmitter Mounting Diagram.

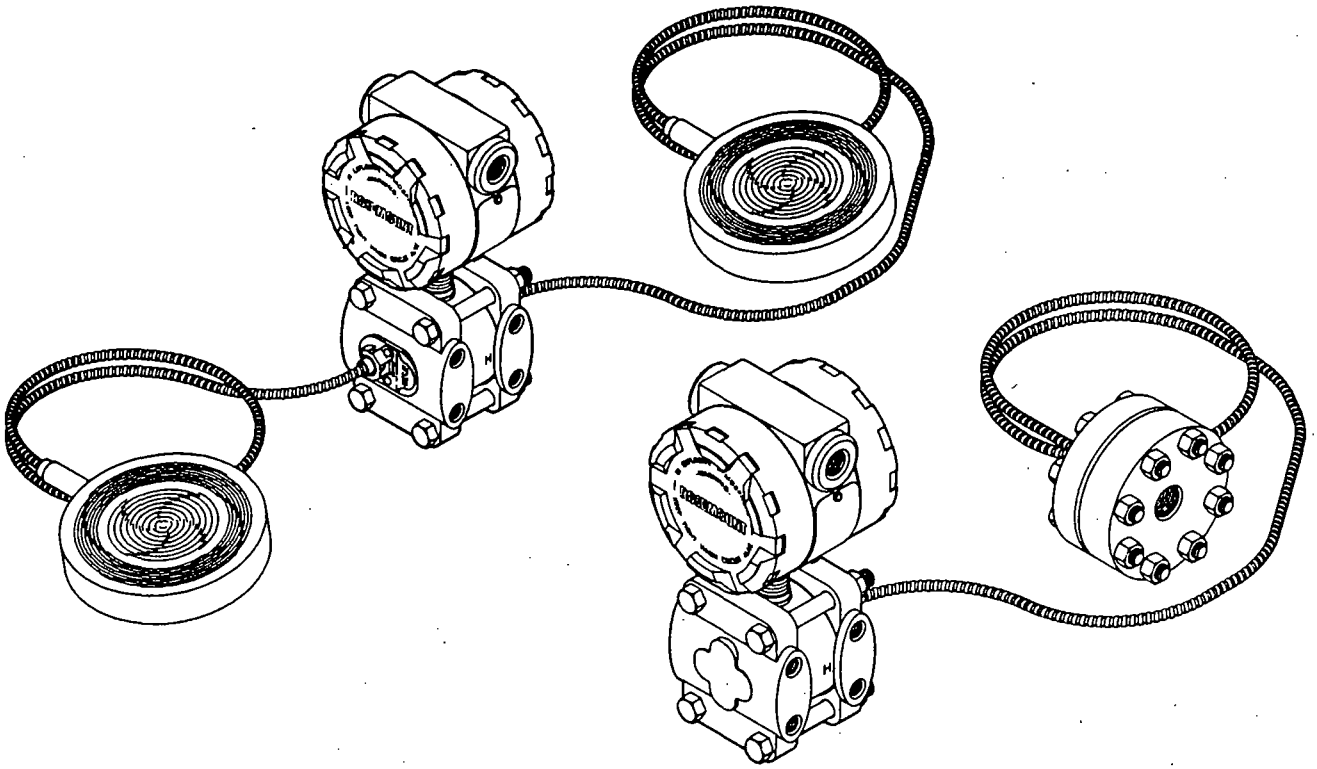

MODEL 1151
WITH MODEL 1199 PANCAKE REMOTE SEAL (PFW)
TWO-SEAL SYSTEM

MODEL 1151
WITH MODEL 1199 FLANGE-MOUNT REMOTE SEAL (RTW)
ONE-SEAL SYSTEM

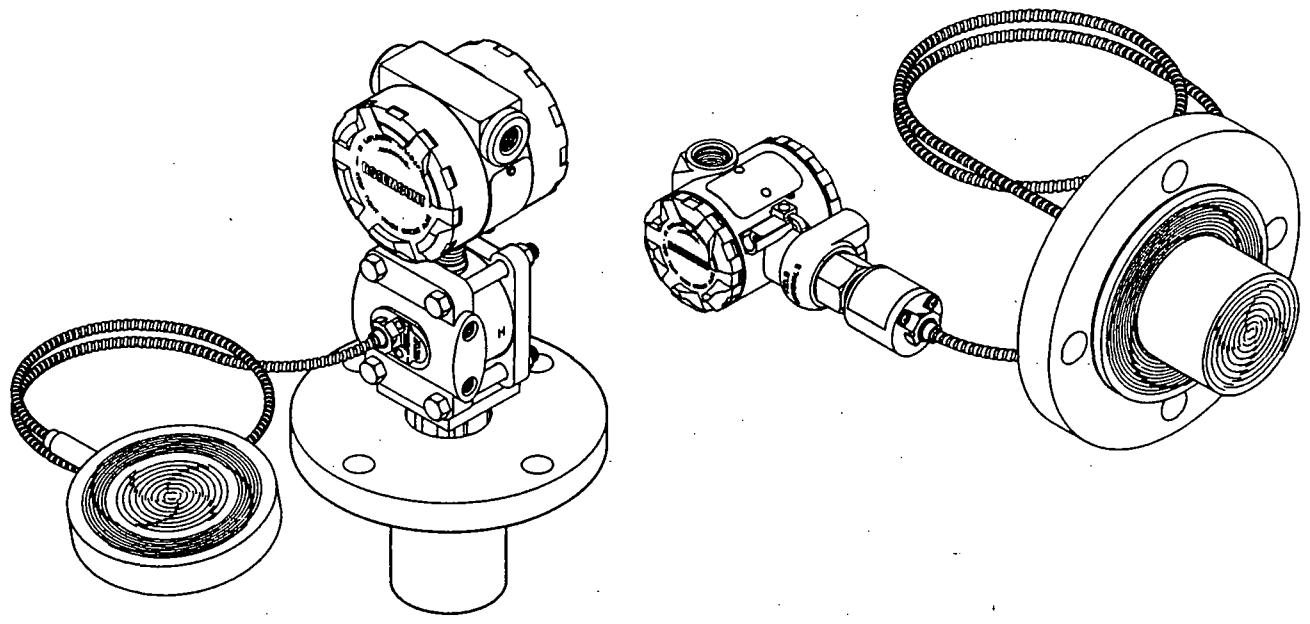

MODEL 1151LT
WITH MODEL 1199 PANCAKE REMOTE SEAL (PFW)
ONE-SEAL SYSTEM

MODEL 2088
WITH MODEL 1199 EXTENDED DIAPHRAGM SEAL (EFW)
ONE-SEAL SYSTEM

1151A04C 1199-2088A28A 1199-1151A04A,B

FIGURE 1-3. Typical Transmitter/Remote Diaphragm Seal Assembly Configurations.

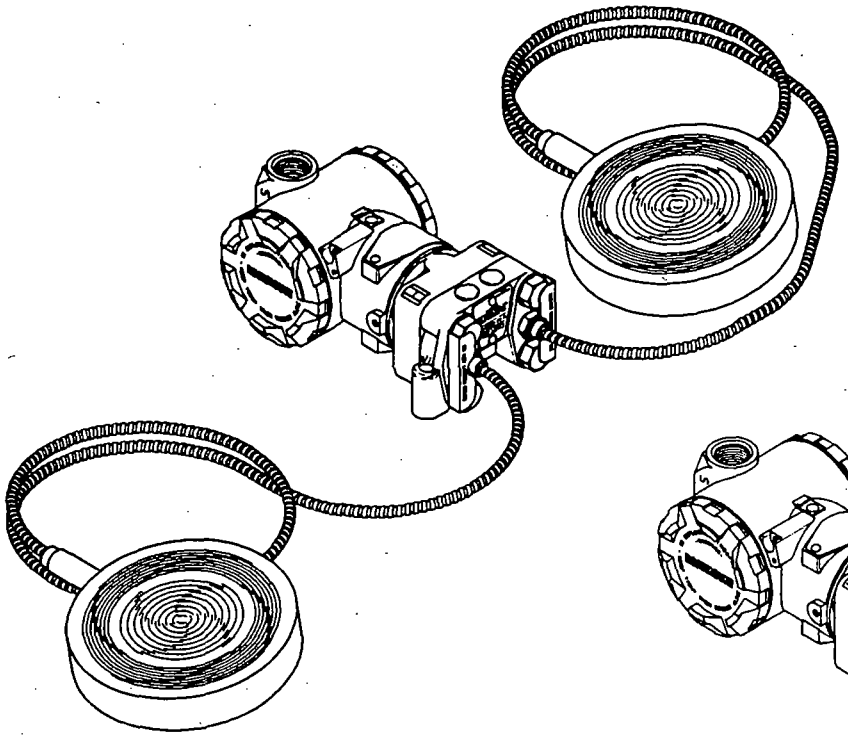

MODEL 3051C
WITH MODEL 1199 PANCAKE REMOTE SEAL (PFW)
TWO-SEAL SYSTEM

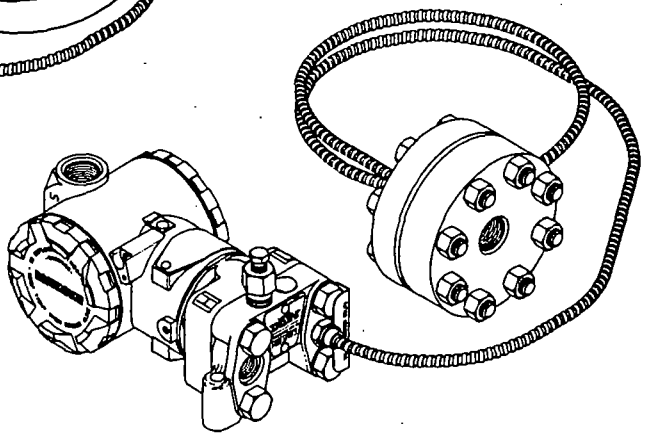

MODEL 3051C DIFFERENTIAL
WITH MODEL 1199 THREADED REMOTE SEAL (RTW)
ONE-SEAL SYSTEM

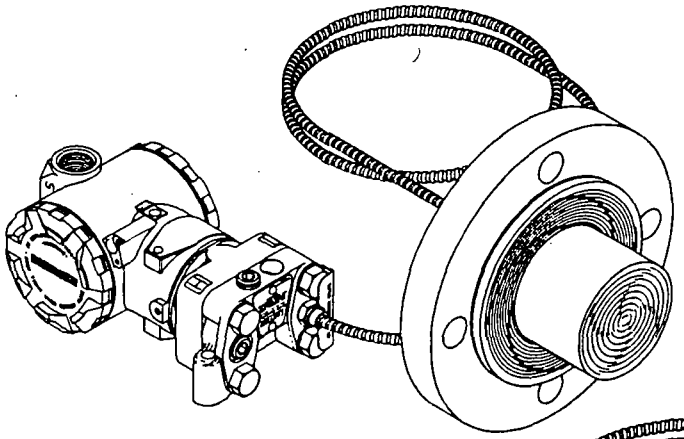

MODEL 3051C GAGE
WITH MODEL 1199 EXTENDED DIAPHRAGM SEAL (EFW)
ONE-SEAL SYSTEM

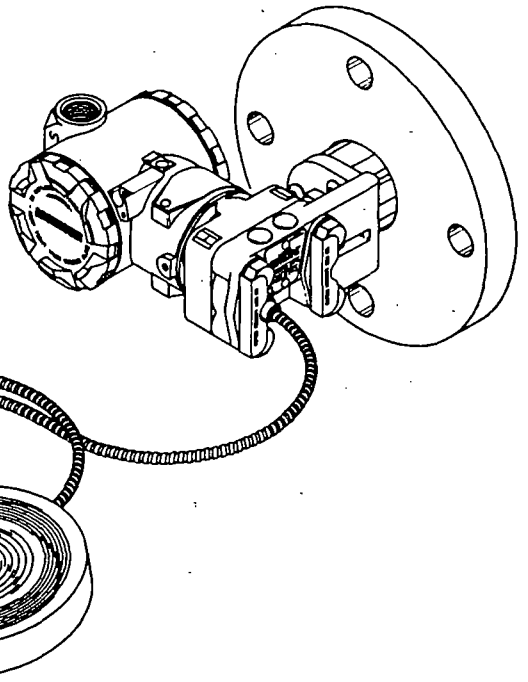

MODEL 3051L
WITH MODEL 1199 PANCAKE REMOTE SEAL (PFW)
ONE-SEAL SYSTEM

1199-3051A28D,C,A,B

FIGURE 1-4. Typical Transmitter/Remote Diaphragm Seal Assembly Configurations.

Optimizing Performance

Because instrument response time is directly proportional to capillary length, and the fill fluid volume in the capillary changes with temperature to affect the output, care must be taken to optimize performance:

- Keep the capillary length as short as possible.
- Mount a transmitter with one seal at the same level, or below the seal and process connection.

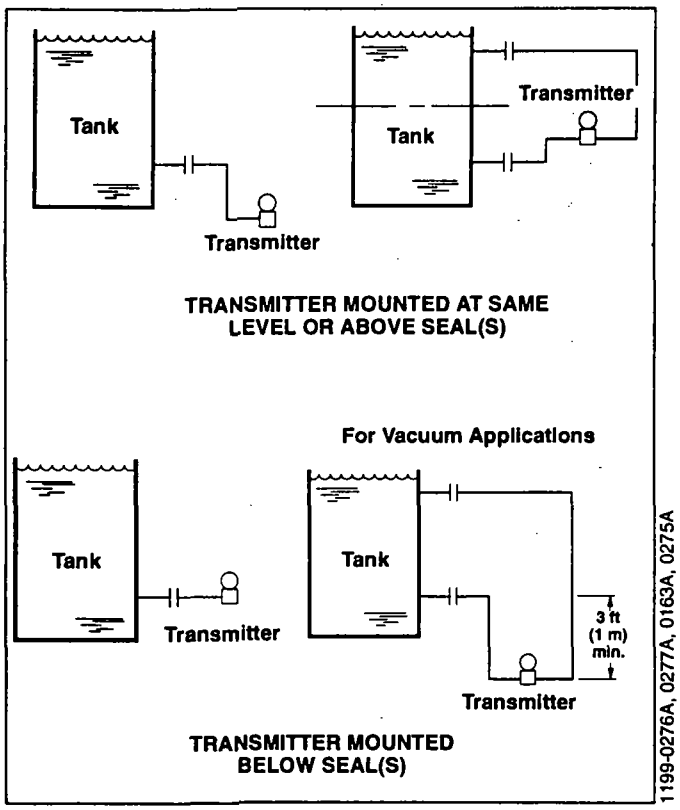

FIGURE 1-5. Mounting Transmitters.

- In vacuum applications, mount the transmitter below the lower tap to ensure proper operation. This requirement applies to both one- and two-seal systems.
- Avoid mounting seals and capillaries in direct sun light.
- Keep the capillary lengths equal when two seals are involved.
- Rezero the transmitter on a seasonal basis.
- Never attempt to disconnect the seals or capillaries. Doing so will void the warranty.

APPLICATION CONSIDERATIONS

Diaphragm seal installations frequently require transmitters to be calibrated with *suppressed or elevated zeroes*.

Zero suppression is defined as a range where the measured variable is below the lower-range value. This type of span is required when a gage or differential pressure transmitter with a seal attached to the high side is mounted below the seal/process connection.

Zero elevation is defined as a range where the measured variable zero is above the lower-range value. This type of span is necessary when the same transmitter is mounted above the seal/process connection. Zero elevation is also required for pressurized tank level measurements when a differential pressure transmitter with two seals is mounted below the reference or upper tank connection.

When designing the transmitter seal system, do not exceed the minimum span and upper and lower range limits when calibrations require elevated or suppressed spans. Make sure that the height of the process fluid level (H) multiplied by the specific gravity of the process liquid (S_p) falls between the transmitter minimum and maximum span limits.

Minimum span < (H)(s_p) < Maximum span

NOTE

For the Model 3051C and 1151 Smart Transmitters, the maximum span equals the difference between the upper and lower range limits. For example, a Model 3051CD2 (Range Code 2) transmitter that has an upper range limit of 250 inH_2O and a lower range limit of –250 in inH_2O has a maximum span capability of 500 inH_2O.

The following example calculates the maximum amount of zero elevation or suppression for a Range Code 2 transmitter. This determines mounting considerations for the transmitter.

Example

Given:
Range Code 2 transmitter with seal and capillary
Upper Range Limit (URL) = 250 inH_2O
Specific gravity of the inert fill fluid (S_f) = 1.9

Divide the transmitter URL by the specific gravity of the inert fill fluid. The range limit calculation is:

$$\frac{250 \text{ in.}}{1.9} = 131.6 \text{ in}H_2O$$

The following mounting considerations depend on the application.

For zero suppressed applications with a single-seal system:

Do not mount the transmitter below the seal more than 131.6 inches minus the required span.

For zero elevated applications with a single-seal system:

Do not mount the transmitter more than 131.6 inches above the seal.

For zero elevated applications with a two-seal system:

The distance between the remote seal taps should not exceed 131.6 inches if it is necessary to measure an empty tank condition.

CALCULATING CALIBRATION

This section provides procedures used to calculate the calibration of a single-seal system with the transmitter mounted below the seal, a single-seal system with the transmitter mounted above the seal, and a transmitter with two seals.

Single-Seal System with Transmitter Mounted Below the Seal

Use the following procedure to calculate the calibration of a transmitter mounted below a single seal, as shown in Figure 1-6:

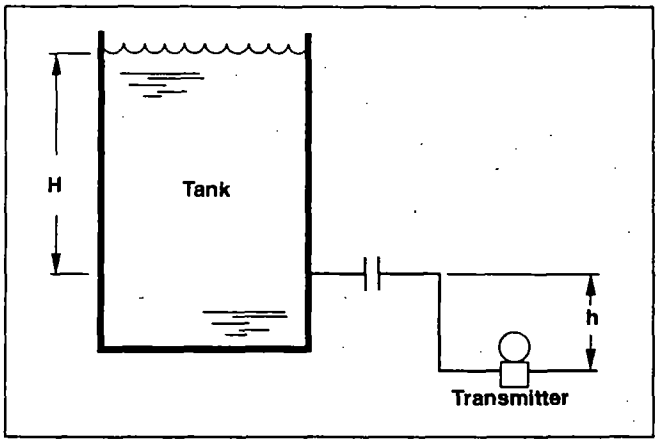

FIGURE 1-6. Transmitter Mounted Below a Single Seal.

1. Calculate the amount of zero suppression by multiplying the distance between the process connection and the transmitter (h) by the fill fluid specific gravity (s_f).

   Zero Suppression = (h)(s_f)

NOTE
A positive value for (h) indicates that the transmitter is mounted below the seal/process connection and that you have zero suppression.

2. Calculate the span by multiplying the maximum process fluid height (H) by the specific gravity of the process liquid (s_p).

   Span = (H)(s_p)

3. Calibrate the transmitter using the following equation:

   Calibration = Zero Suppression to (Zero Suppression + Span)

Example

Given:

D.C. ® 200 fill fluid
$(s_f) = 0.934$
$(h) = +40$ in.
$(s_p) = 1.2$
$(H) = 120$ in.

Determine the transmitter calibration and range:

1. Zero Suppression = $(+40)(0.934) = 37.4$ inH_2O.
2. Span = $(120)(1.2) = 144$ inH_2O.
3. Calibration = 37.4 to (37.4 + 144) = 37.4 to 181.4 inH_2O.

Therefore, in this example a Model 3051C Range Code 2, Model 1151 Range Code 4, or Model 2088 Range Code 1 transmitter is required.

Single-Seal System with Transmitter Mounted Above the Seal

Use the following procedure to calibrate a transmitter mounted above a single seal, as shown in Figure 1-7:

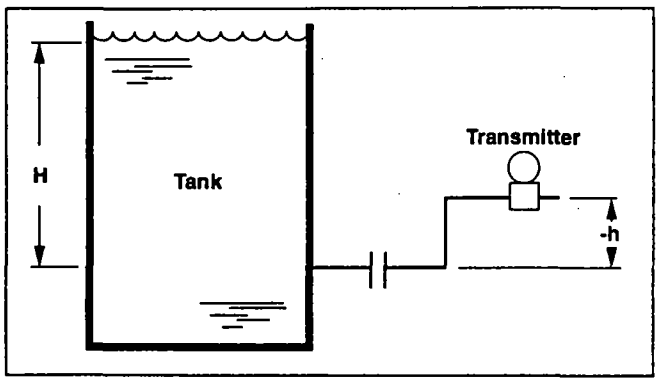

FIGURE 1-7. Transmitter Mounted Above a Single Seal.

1. Calculate the amount of zero elevation by multiplying the height of the transmitter above the process connection (h) by the specific gravity of the fill fluid (s_f).

Zero Elevation = $(-h)(s_f)$

NOTE

A negative value for (h) indicates that the transmitter is mounted above the seal/process connection and that you have zero elevation.

2. Calculate the transmitter span by multiplying the maximum height of the process fluid (H) by the specific gravity of the process liquid (s_p).

Span = $(H)(s_p)$

3. Calibrate the transmitter using the following equation:

Calibration = Zero Elevation to (Elevation + Span)

Example

Given:

Inert fill fluid
$(s_f) = 1.9$
$(h) = -30$ in.
$(s_p) = 1.1$
$(H) = 120$ in.

Determine the transmitter calibration and range:

1. Zeto Elevation = $(-30)(1.9) = -57$ inH_2O.
2. Span = $(120)(1.1) = 132$ inH_2O.
3. Calibration = -57 to $(-57 + 132) = -57$ to 75 inH_2O.

Therefore, for this example a Model 3051 Range Code 2, Model 1151 Range Code 4, or Model 2088 Range Code 1 transmitter is required. Although this installation is not ideal, there are cases where the seal must be mounted above the transmitter. The example only illustrates how the calibration is determined.

Transmitter with Two-Seal System

Use the following procedure to calibrate a differential pressure transmitter with two seals, mounted below the low-side seal, as shown in Figure 1-8:

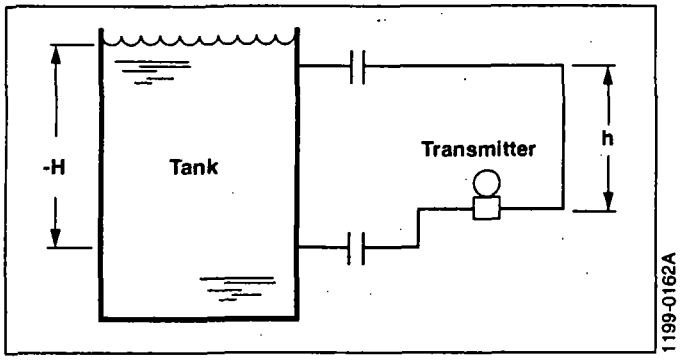

FIGURE 1-8. Transmitter with Two Seals.

1. Calculate the amount of zero elevation by multiplying the distance between the two seal/process connections, (h) by the specific gravity of the fill fluid (s_f).

$$\textbf{ZeroElevation} = (-h)(s_f)$$

NOTE
A negative value for (h) indicates the direction of the head effect produced in the capillary system and that you have zero elevation.

2. Calculate the span by multiplying the maximum height of the process fluid (H) by the specific gravity of the process liquid (s_p).

$$\textbf{Span} = (H)(s_p)$$

3. Calibrate the transmitter using the following equation:

Calibration = Zero Elevation to (Zero Elevation + Span)

Example

Given:

Syltherm™ fill fluid
$(s_f) = 0.934$
$(h) = -400$ in.
$(s_p) = 0.9$
$(H) = 350$ in.

Determine the transmitter calibration and range:

1. Zero Elevation = $(-400)(0.9)$
   $= -373.6$ inH_2O.
2. Span = $(350)(0.9) = 315$ inH_2O.
3. Calibration = -373.6 to $(-373.6 + 315)$
   $= -373.6$ to -58.6 inH_2O.

Therefore, in this example a Model 3051C Range Code 3 or Model 1151 Range Code 5 transmitter is required.

TABLE 1-1. Transmitter Span Limits.

Model	Range	LRL	URL	Minimum Span	Maximum Span
1151	4	–150 in.	150 in.	25 in.	150 in.
	5	–750 in.	750 in.	125 in.	750 in.
	6 (Diff.)	–100 psi	100 psi	17 psi	100 psi
	6 (Gage)	0.5 psia	100 psig	17 psi	100 psi
1151 Smart	4	–150 in.	150 in.	15 in.	300 in.
	5	–750 in.	750 in.	75 in.	1,500 in.
	6 (Diff.)	–100 psi	100 psi	10 psi	200 psi
	6 (Gage)	0.5 psia	100 psig	10 psi	114 psi
3051C	2	–250 in.	250 in.	8.3 in.	500 in.
	3 (Diff.)	–1,000 in.	1,000 in.	33.3 in.	2,000 in.
	3 (Gage)	–408 in.	1,000 in.	33.3 in.	1,408 in.
2088	1	0 psia	30 psig	5 psi	34.7 psi
	2	0 psia	150 psig	25 psi	164.7 psi
	3	0 psia	800 psig	133 psig	814.7 psi

NOTE
Maximum span may be limited by seal pressure limit. Unless otherwise indicated, the suggested span of a transmitter/seal assembly is 50 inH_2O (125 mbars). For calibrated spans below this level, consult your Rosemount representative.

SPECIFICATIONS

Functional Specifications

Service

Hot, corrosive, or viscous process fluids; sanitary processes, including those that must conform to 3-A® sanitary standards.

TABLE 1-2. Transmitter Range/Code Table.

For Model	Code	Range
3051C Differential and Gage Pressure Transmitters	2	0–8.3 to 0–250 inH_2O
	3	0–33.3 to 0–1,000 inH_2O
	4	0–10 to 0–300 psig (Gage Pressure Only)
	5	0–66.7 to 0–2,00 psig[1] (Gage Pressure Only)
1151 Differential Gage Pressure Transmitters	4	0–25 to 0–150 inH_2O
	5	0–125 to 0–750 inH_2O
	6	0–17 to 0–100 psi
	7	0–50 to 0–300 psi[1]
	8	0–170 to 0–1,000 psi[1]
2088 Gage Pressure Transmitters	1	0–5 to 0–30 psi
	2	0–25 to 0–150 psi
	3	0–133 to 0–800 psi[1]

(1) Maximum span may be limited by seal pressure limit.

TABLE 1-3. Transmitter Temperature Limits Summary.

	Model 3051C	Model 1151	Model 2088
Ambient	–40 to 185 °F (–40 to 85 °C)	**S Electronics** –40 to 185 °F (–40 to 85 °C) **E,G Electronics** –20 to 200 °F (–29 to 93 °C)	–40 to 185 °F (–40 to 85 °C)
Storage	–50 to 230 °F (–46 to 110 °C)	**S Electronics** –60 to 185 °F (–51 to 85 °C) **E,G Electronics** –60 to 250 °F (–51 to 82 °C)	–50 to 185 °F (–46 to 85 °C)
Process			
Silicone Sensor	–40 to 250 °F (–40 to 121 °C)	–40 to 220 °F (–40 to 104 °C)	–40 to 250 °F (–40 to 121 °C)
Inert Sensor	0 to 185 °F (–18 to 85 °C)	0 to 160 °F (–18 to 71 °C)	NA

Sanitary Seal Approvals

Rosemount SSW, SCW, and TSW seals conform to 3-A standards for sanitary applications and are listed by USDA as accepted equipment in compliance with Meat and Poultry Inspection Program sanitary standards.

Glycerin and water, propylene glycol and water, and Neobee® sanitary fill fluids are Generally Recognized As Safe (GRAS) according to the FDA Code of Federal Regulations Title 21.

Hazardous Locations Certifications

Adding seals to the transmitter does not change the approval ratings of the individual transmitters. For complete approval listings, see the respective product data sheet for the pressure transmitter.

TABLE 1-4. Remote Seal Fill Fluids Specifications.

Fill Fluid	Temperature Limits[1]	Specific Gravity	Coefficient of Thermal Expansion
***D.C. 200* Silicone**	–40 to 300 °F (–40 to 149 °C)	0.934	0.00060
Inert Fill	–50 to 400 °F (–45 to 205 °C)	1.85	0.00049
***Syltherm 800*® Silicone**	–50 to 400 °F (–45 to 205 °C)	0.934	0.00052
Glycerin and Water[2]	0 to 200 °F (–11 to 93 °C)	1.13	0.00019
Propylene Glycol and Water	0 to 200 °F (–11 to 93 °C)	1.02	0.00019
Neobee M-20	0 to 400 °F (–17 to 205 °C)	0.90	0.00056

(1) Temperature Limits are reduced in vacuum service.
(2) Glycerin and Water and Propylene Glycol and Water are not suitable for vacuum service.

TABLE 1-5. Maximum Pressure Limits for Remote Seals.

When Assembled to Models 1151 and 3051C:	
RTW Threaded	2,000 psig
RFW Flanged	Flange Rating (Table E)
EFW Extended	Flange Rating (Table E)
FFW Flush Flanged	Flange Rating (Table E)
PFW Pancake	Flange Rating (Table E)
UCW Union Connection	2,000 psig
CTW Chemical Tee	1,000 psig
SSW Sanitary Tank Spud[1]	Clamp Rated to 300 psig (1,000 psig max.)
SCW Sanitary *Tri-Clamp*	Clamp Rating (1,000 psig max.)
TSW Thin Wall Tank Spud[1]	Clamp Rated to 300 psig (1,000 psig max.)
When Assembled to Model 2088:	
Equal to the upper range limit for all Ranges or seal pressure rating as shown above, whichever is less.	

(1) Supplied clamp is rated to 300 psig.

TABLE 1-6. Flange Pressure Rating[1].

Material	Class 150	Class 300	Class 600
Carbon Steel	285	740	1,480
Stainless Steel	275	720	1,440

(1) At 100 °F (38 °C), the rating decreases with increasing temperature.

Zero Elevation and Suppression

4–20 mA dc Electronics

Can be set anywhere within the transmitter limits as long as span is greater than or equal to the minimum span of the transmitter, the lower range value does not exceed the lower range limit, and the upper range value does not exceed the upper range limit.

10–50 mA dc Electronics

Maximum zero elevation and suppression is 150% of the calibrated span. The span must stay within the range limits of the transmitter and must be greater than or equal to the minimum span of the transmitter.

Performance Specifications

Transmitter

Refer to the respective product data sheet for transmitter performance specifications.

Seal Temperature Effects

Reference conditions: 316 SST diaphragm, 5-ft. (1.5-m) capillary with 0.028 in. I.D., D.C. 200 fill fluid, 50 °F (28 °C) temperature change.

TABLE 1-7. Seal Temperature Effects.

Seal Type	Process Connection Size	5 ft (1.5 m) Capillary	Each Additional 5 ft of capillary
Pancake	3 in., DN 80	< 1.0 in.	0.4 in.
Flush Flanged	3 in., DN 80 2 in., DN 50 4 in., DN 100	< 1.0 in < 1.0 in < 0.5 in	0.4 in. 0.4 in. 0.25 in.
Flanged	1 in., DN 25 1.5 in., DN 40	< 4.0 in. < 4.0 in.	2 in. 2 in.
Extendend	3 in. 4 in. DN 80	< 1.0 in. < 1.0 in. < 1.0 in.	0.4 in. 0.4 in. 0.4 in.
Threaded	All Sizes	< 4.0 in.	2 in.
Chemical Tee	—	< 0.5 in.	0.25 in.
Union Connection	—	< 7.0 in.	4 in.
Tri-Clamp	1.5 in. 2 in. 2.5 in. 3 in. 4 in.	< 28 in. < 7.0 in. < 4.0 in. < 1.0 in. < 0.25 in.	< 7.5 in. < 4 in. < 1.3 in. 0.5 in. < 0.04 in.
Tank Spud	—	< 1.0 in.	0.5 in.
Thin Wall Tank Spud	—	< 1.0 in.	0.5 in.

Time Response

Use of remote seals increases overall time response of transmitter/remote seal systems. Response time varies with temperature, pressure range, capillary length, capillary diameter, fill fluid, and transmitter. Time response can be estimated. Consult factory.

Physical Specifications

Materials of Construction

Transmitters

Isolating Diaphragm

Model 3051C: 316L SST.
Model 1151: 316L SST.
Model 2088: 316L SST.

Process Flange or Connector

Model 3051C: 316 SST.
Model 1151: Plated Carbon Steel or 316 SST.
Model 2088: 316L SST.

O-ring

Model 3051C: Glass-filled TFE.
Model 1151: Viton®.
Model 2088: None.

Sensor Module Fill Fluid

Silicone Oil.

Bolts (Models 3051C and 1151)

Plated Carbon Steel or 316 SST.

Electronics Housing

Low-Copper Aluminum, NEMA 4X, IP 65 and IP 67, CSA Enclosure 4.

Paint

Epoxy-Polyester.

Cover O-rings

Buna-N.

Seals, Fill Fluid, and Capillary

Refer to ordering information Tables in Section 3.

TABLE 1-8. Flange Dimensions.

Class	Pipe Size	"A" Bolt Circle Diameter	"B" Outside Diameter	"C" Flange Thickness	Number of Bolts	Bolt Hole Diameter
150	1	3.12	4.25	0.69	4	0.62
	1.5	3.88	5	0.81	4	0.62
	2	4.75	6	0.87	4	0.75
	3	6	7.5	1.06	4	0.75
	4	9	9	1.06	8	0.75
300	1	3.5	4.88	0.81	4	0.75
	1.5	4.5	6.12	0.94	4	0.88
	2	5	6.5	1.00	8	0.75
	3	6.62	8.25	1.25	8	0.88
	4	7.88	10	1.37	8	0.88
600	1	3.5	4.88	0.81	4	0.75
	1.5	4.5	6.12	1.00	4	0.88
	2	5	6.5	1.12	8	0.75
	3	6.62	8.25	1.37	8	0.88
	4	10.75	10.75	1.62	8	1.00

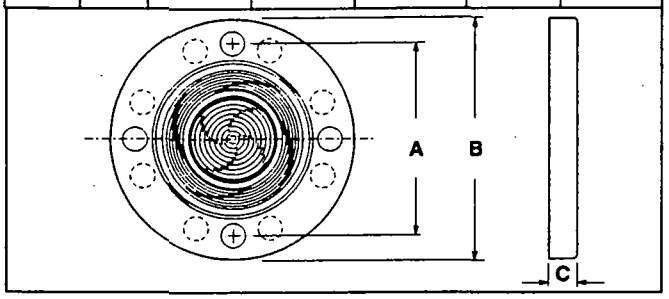

1199-3051C27A

Electrical Connection

Model 3051C and Model 2088
1/2-14 NPT, PG 13.5, or CM20 conduit entry.

Model 1151
1/2-14 NPT conduit with screw terminals and integral test jacks compatible with miniature banana plugs (Pomona 2944, 3690, or equivalent).

Model 1151 Smart and Model 3051C
The Model 268 SMART FAMILY® Interface connections are fixed to the terminal block.

Weight

Capillary and seal weight depends on type of seal and capillary:

Model 3051C
5.5 lb (2.5 kg) without options.

Model 1151
12 lb (5.4 kg) without options.

Model 2088
2 lb (0.9 kg) without options.

MAINTENANCE

The only maintenance procedure possible for transmitters with seals and capillaries is to replace the electronic circuit boards. For procedures to replace the boards, refer to Product Manual MAN 4001 for the Model 3051C Pressure Transmitter.

If the sensor module, seal, or capillary requires repair, return the unit to either a Rosemount service center or the factory. Because Rosemount Inc. can not be responsible for shipping damage, be sure to protect the seal diaphragms. It is good practice to tape corrugated carton stock to the diaphragm and pack the complete assembly in shock absorbent material.

RETURN OF MATERIALS

To expedite the return process outside the United States, contact the nearest Rosemount representative.

Within the United States, call the Rosemount National Response Center using the 1-800-654-RSMT (7768) toll-free number. This center, available 24 hours a day, will assist you with any needed information or materials.

The center will ask for product model and serial numbers, and will provide a Return Material Authorization (RMA) number. The center will also ask for the name of the process material the product was last exposed to.

⚠CAUTION

Mishandling products exposed to a hazardous substance can cause death or serious injury. If the product being returned was exposed to a hazardous substance as defined by OSHA, a copy of the required Material Safety Data Sheet (MSDS) for each hazardous substance identified must be included with the returned goods.

The Rosemount National Response Center will detail the additional information and procedures necessary to return goods exposed to hazardous substances.

SECTION
2

Transmitter Ordering Tables

ORDERING INFORMATION

Use the following ordering procedure to specify a valid transmitter/seal system.
This section provides only the tables for specifying the transmitter. Section 3 provides the tables for specifying the remote diaphragm seal(s), capillary, and fill fluid.

Ordering Procedure

1. Select the appropriate transmitter from Tables 2-1 to 2-5.
2. Select the required seal(s) from Tables 3-1 to 3-11 in Section 3.
3. Select a capillary, if required, from Table 3-12, based on the seal already selected.
4. Select a fill fluid, always required, from Table 3-13.

Example 1 — Model 1151 Gage Pressure Transmitter with a Pancake Remote Seal, Capillary Tubing, and D.C. 200 Fill Fluid

1. From Table 2-2: 1151GP 4 S 12 S1
2. From Table 3-1: Qty 1—1199PFW 11 A 11F11 (quantity based on transmitter Option Code S1)
3. From Table 3-12: Qty 1—1199CAP 11 D 10 C 11
4. From Table 3-14: Qty 1—C10485-0007

Example 2 — Model 3051C Differential Pressure Transmitter with a Pancake Remote Seal, Capillary Tubing, and D.C. 200 Silicone Fill Fluid

1. From Table 2-6: 3051CD 2 A 2 2 A 1 A S2
2. From Table 3-1: Qty 2—1199PFW 11 A 11F11 (quantity based on transmitter Option Code S2)
3. From Table 3-12: Qty 2—1199CAP 11 D 10 C 11
4. From Table 3-14: Qty 2—C10485-0007

Example 3 — Model 3051C Differential Pressure Transmitter with a Sanitary Tank Spud Seal, Capillary Tubing, and Neobee M-20 Fill Fluid

1. From Table 2-6: 3051CD 3 A 2 2 A 1 A S2 L4
2. From Table 3-9: Qty 1—1199SSW 54 A 11 (integral mount for two-seal configuration)
   Qty 1—1199SSW 12 A 11 (capillary configuration)
3. From Table 3-12: Qty 1—1199CAP 11 D 20 A 12 (capillary configuration seal—no capillary required for integral mount remote seal)
4. From Table 3-14: Qty 2—C51816-0001

Example 4 — Model 2088 Gage Pressure Transmitter with a Flange-Mount Remote Seal, Capillary Tubing, and Inert Fill Fluid

1. From Table 2-11: 2088G 2 A 22 A 1 S1 B4
2. From Table 3-3: Qty 1—1199RFW 11 A 11 A21
3. From Table 3-12: Qty 1—1199CAP 11 D 15 A 11
4. From Table 3-14: Qty 1—C51734-0001

Model 1151

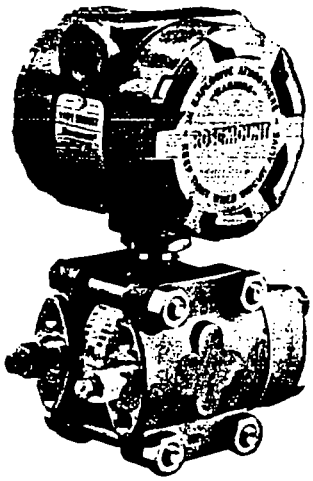

TABLE 2-1. Model 1151 Alphaline® Pressure Transmitter.

Model	Transmitter Type (Select One)	DP	GP
1151DP	Differential Pressure Transmitter	•	—
1151GP	Gage Pressure Transmitter	—	•

Code	Pressure Ranges (URL)	DP	GP
4	150 in$H_2$0 (37.3 kPa)	•	•
5	750 in$H_2$0 (186.4 kPa)	•	•
6	100 psi (689.5 kPa)	•	•
7	300 psi (2,068 kPa)	•	•
8	1,000 psi (6,895 kPa)	•	•

Rangeability	
Output Code	**Min. Span**
S	URL/10
E,G	URL/6

Code	Output	DP	GP
S	4–20 mA, Digital, Smart/Variable Damping	•	•
E	4–20 mA, Linear, Analog/Variable Damping	•	•
G	10–50 mA, Linear, Analog/Variable Damping	•	•

Code	MATERIALS OF CONSTRUCTION[1] Flanges/Adapters	Drain/Vents	Transmitter Diaphragms	Fill Fluid	DP	GP[2]
52	Nickel-plated Carbon Steel	316 SST	316L SST	Silicone	•	•
12	Cadmium-plated Carbon Steel	316 SST	316L SST	Silicone	•	•
22	316 SST	316 SST	316L SST	Silicone	•	•

Code	Remote Diaphragm Seal	DP	GP
S1	One Remote Seal—Select from Tables 6–16	•	•
S2	Two Remote Seals—Select from Tables 6–16	•	—

(1) Bolts and conduit plugs are plated carbon steel; for SST bolts, specify Option Code L4.
(2) On GP and AP transmitters, the low-side flange is plated carbon steel. For a stainless-steel low-side flange, order process connections Option Code D6.

(continued on next page)

TABLE 2-1. (continued).

Optional Selections

Code	Mounting Brackets	DP	GP
B1	Bracket, 2-in. Pipe Mount	•	•
B2	Bracket w/Series 316 SST Bolts	•	•
Code	**Meters**	**DP**	**GP**
M1	Analog Scale, Linear Meter, 0–100%	•	•
M4	LCD Display, Linear Meter, 0–100%, User Scalable	•	•
Code	**Certifications**	**DP**	**GP**
E6	Canadian Standards Association (CSA) Explosion-Proof Approval	•	•
I5(3)	Factory Mutual (FM) Non-Incendive and Intrinsic Safety Approval	•	•
I6(3)	Canadian Standards Association (CSA) Intrinsic Safety Approval	•	•
C6(3)	Combination of I6 and E6; CSA Explosion-Proof and Intrinsic Safety Approval (Requires 42.4 V dc max. power supply)	•	•
E7	Standards Association of Australia (SAA) Flameproof Certification	•	•
E8	CESI/CENELEC Flameproof Certification	•	•
I1(3)	BASEEFA Intrinsic Safety Certification	•	•
I7(3)	Standards Association of Australia (SAA) Intrinsic Safety Certification	•	•
I8(3)	CESI/CENELEC Intrinsic Safety Certification	•	•
N1(3)	BASEEFA Type N Certification	•	•
IC(3)	Schweizerischer Elektrotechnischer Verein (SEV) Intrinsic Safety Certification	•	•
Code	**Bolts for Flanges and Adapters**	**DP**	**GP**
L4	316 SST Flange and Adaptor Bolts	•	•
Code	**Process Connections**	**DP**	**GP**
D6	316 SST Low Side Blank Flange	—	•
Code	**Procedures**	**DP**	**GP**
C9(4)	Custom Configuration	•	•
Typical Model Number:	1151DP 4 S 52 S1 B1		

NOTE
FM explosion-proof approval is standard.

(3) Not available with Output Code G.
(4) Available with Output Code S only.

Standard Accessories

All models are shipped with flange adapters, drain/vent valves, and one instruction manual per shipment.

Tagging

The Alphaline Differential Pressure Transmitter will be tagged, at no charge, in accordance with customer requirements. All tags are stainless steel. The standard tag is wired to the transmitter. Tag is 0.020 in. (0.051 cm) thick with 0.125 in. (0.318 cm) high letters. A permanently attached tag is available upon request.

Calibration

Transmitters are factory calibrated to customer's specified range. If calibration is not specified, then the transmitters are calibrated at maximum range. Calibration is performed at ambient temperature and pressure.

Custom Configurations (Option Code C9)

If Options Code C9 is ordered, the customer may specify the following data in addition to the standard configuration parameters. Refer to Configuration Data Sheet CDS 4593.

4 and 20 mA points must be the same unit of measure. Available units of measure:

inH_2O	mmH_2O	bar	kg/cm^2	torr
inHg	mmHg	mbar	Pa	atm
ftH_2O	psi	g/cm^2	kPa	

The Model 1151 Pressure Transmitter may be protected by one or more of the following U.S. Pat. Nos.: 3,854,039; 3,975,719; 4,339,750; and Re. 30.603. May Depend on Model. Other U.S. and Foreign Patents Issued and Pending.

Model 1151LT

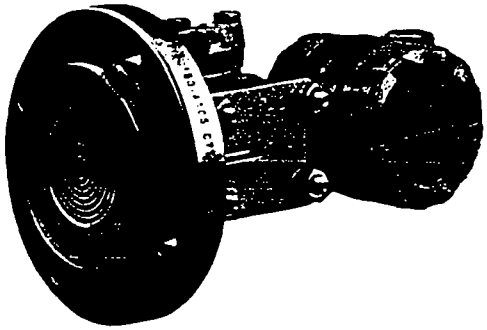

TABLE 2-2. Model 1151 Alphaline Flange-Mounted Liquid Level Transmitter.

Model	Transmitter Type
1151LT	*Alphaline* Flange-Mounted Liquid Level Transmitter

Code	Range
4	0–25 to 0–150 inH_2O (0–635 to 0–3,810 mmH_2O)
5	0–125 to 0–750 inH_2O (0–3,175 to 0–19,050 mmH_2O)
6	0–471 to 0–2,770 inH_2O (0–11.96 to 0–70.36 mH_2O)

Code	Output
S	1151 Smart 4–20 mA dc Electronics (See PDS 4593)
E	4–20 mA dc, with Variable Damping
G	10–50 mA dc, with Variable Damping

Code	HIGH PRESSURE SIDE *Diaphragm Size*	*Material*	*Extension Length*	
G0	2 in.	316L SST	Flush Mount Only	} When specifying this option code, a lower housing must be selected from the flushing connection options table.
H0	2 in.	*Hastelloy*	Flush Mount Only	
J0	2 in.	Tantalum	Flush Mount Only	
A0	3 in.	316L SST	Flush Mount	
A2	3 in.	316L SST	2 in.	
A4	3 in.	316L SST	4 in.	
A6	3 in.	316L SST	6 in.	
B0	4 in.	316L SST	Flush Mount	
B2	4 in.	316L SST	2 in.	
B4	4 in.	316L SST	4 in.	
B6	4 in.	316L SST	6 in.	
C0	3 in.	*Hastelloy*	Flush Mount	
C2	3 in.	*Hastelloy*	2 in.	
C4	3 in.	*Hastelloy*	4 in.	
C6	3 in.	*Hastelloy*	6 in.	
D0	4 in.	*Hastelloy*	Flush Mount	
D2	4 in.	*Hastelloy*	2 in.	
D4	4 in.	*Hastelloy*	4 in.	
D6	4 in.	*Hastelloy*	6 in.	
E0	3 in.	Tantalum	Flush Mount Only	
F0	4 in.	Tantalum	Flush Mount Only	

NOTE
Extension diameters are sized to fit Schedule 80 pipe. Consult factory for Schedule 40 pipe.

Code	MOUNTING FLANGE Size	Rating	Material	High Pressure Side Applicable Size Codes
A	3 in.	Class 150	Carbon Steel	A, C, and E
B	4 in.	Class 150	Carbon Steel	B, D, and F
C	3 in.	Class 300	Carbon Steel	A, C, and E
D	4 in.	Class 300	Carbon Steel	B, D, and F
M	2 in.	Class 150	Carbon Steel	G, H, and J
N	2 in.	Class 300	Carbon Steel	G, H, and J
F	3 in.	Class 150	316 SST	A, C, and E
G	4 in.	Class 150	316 SST	B, D, and F
H	3 in.	Class 300	316 SST	A, C, and E
J	4 in.	Class 300	316 SST	B, D, and F
X	2 in.	Class 150	316 SST	G, H, and J
Y	2 in.	Class 300	316 SST	G, H, and J

(continued on next page)

TABLE 2-2. (continued).

Code	SENSOR MODULE AND LOW-SIDE MATERIALS OF CONSTRUCTION Low-Side Flange and Adapter	Drain/Vent Valves	Sensor Module Low-Side Isolator Diaphragm	Low-Side Fluid Fill
52	Nickel-plated Carbon Steel	316 SST	316L SST	Silicone
12	Cadmium-plated Carbon Steel	316 SST	316L SST	Silicone
22	316 SST	316 SST	316L SST	Silicone

Code	Process Fill—High Pressure Side
D	Silicone
F	Inert
G	Glycerine and Water
N	*Neobee M-20*
S	*Syltherm* 800
P	Propylene Glycol and Water

Code	Remote Diaphragm Seal
S1	One Remote Seal Selected From Tables 6–16

Code	Options
C9	Custom Configuration
M1	Linear Meter, 0–100% Scale
M4	LCD Display, 0–100%
W5	Copper O-ring for Vacuum Service (Non-wetted)
F_	Select One Code from Lower Housing Flushing Connection Option Table (Required with 2-in. Size Process Connection Codes G0, H0, J0. Optional for 3-in. and 4-in. Sizes)

NOTE
FM explosion-proof approval is standard.

Flushing Connection Options Table.

Code	Lower Housing Material	Number of Flushing Connections
F1	SST	1
F2	SST	2
F3(1)	*Hastelloy*	1
F4(1)	*Hastelloy*	2
FA	SST	0
FC(2)	*Hastelloy*	0

(1) Not available with high pressure side Option Codes A0, B0, and G0.
(2) Not available with high pressure side Option Code G0.

Typical Model Number: 1151LT 4 S A0 52 D S1

Output Code(s) (Smart Transmitter)

Standard Configuration

Unless otherwise specified, transmitter is shipped as follows:

Engineering units:	inH_2O for ranges 3–5; psi for ranges 6–0.
4 mA:	0 inH_2O or 0 psi.
20 mA:	Upper range limit.
Output:	Linear.
Isolator material:	Specified model code option.
Sensor fill fluid:	Specified model code option.
Flange material:	Specified model code option.
O-ring material:	Specified model code option.
Drain/vent:	Specified model code option.
Integral meter:	Specified model code option.
Remote seal type:	Specified model code option.
Remote seal fill fluid:	Specified model code option.
Number of remote seals:	Specified model code option.
Software tag:	Blank.

Customer may specify the above items at no charge. Software tag (8 character maximum) is left blank unless specified as "soft tag". If "soft tag" is specified, the transmitter will have both a hardware tag and a software tag.

Custom Configuration (Option Code C9)

If option code C9 is ordered, the customer may specify the following data in addition to the standard configuration parameters. Refer to Configuration Data Sheet CDS 4593.

4 and 20 mA points must be the same unit of measure. Available units of measure:

inH_2O	mmH_2O	bar	kg/cm^2	torr
inHg	mmHg	mbar	Pa	atm
ftH_2O	psi	g/cm^2	kPa	

Standard Accessories

All models are shipped with flange adapter, drain/vent valve, and one product manual per shipment.

Calibration

Transmitters are factory calibrated to customer's specified range. If calibration is not specified, transmitters are calibrated at maximum range. Calibration is at ambient temperature and pressure.

Tagging

The liquid level transmitters will be tagged, at no charge, in accordance with customer requirements. All tags are stainless steel. The standard tag is wired to the transmitter. Tag is 0.020 in. (0.051 cm) thick with 0.125 in. (0.318 cm) high letters. A permanently attached tag is available upon request.

Model 3051C

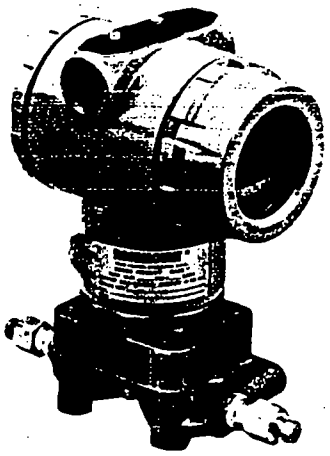

TABLE 2-3. Models 3051CD and 3051CG Pressure Transmitters.

Model	Transmitter Type (Select One)				CD	CG
3051CD	Differential Pressure Transmitter				•	—
3051CG	Gage Pressure Transmitter				—	•
Code	**Pressure Ranges (URL)**				**CD**	**CG**
2	0–8.3 to 0–250 inH_2O (0–2.07 to 0–62.2 kPa)				•	•
3	0–33.3 to 0–1,000 inH_2O (0–8.28 to 0–248 kPa)				•	•
4	0–10 to 0–300 psig (0–70 to 0–2,070 kPa)				—	•
5	0–66.7 to 0–2,000 psig (0–460 to 0–13,800 kPa)				—	•
Code	**Output**				**CD**	**CG**
A	4–20 mA with Digital Signal Based on *HART* Protocol				•	•
	MATERIALS OF CONSTRUCTION					
Code	**Process Flange Type**	**Flange Material**	**Drain/ Vent**	**Flange Adapters**	**CD**	**CG**
2	*Coplanar*	SST	SST	SST	•	•
Code	**Isolating Diaphragm**				**CD**	**CG**
2	316L SST				•	•
Code	**O-Ring**				**CD**	**CG**
A	Glass-filled TFE				•	•
Code	**Fill Fluid**				**CD**	**CG**
1	Silicone				•	•
Code	**Housing Material**		**Conduit Entry Size**		**CD**	**CG**
A	Epoxy-Polyester Covered Aluminum		½–14 NPT		•	•
B	Epoxy-Polyester Covered Aluminum		CM 20		•	•
C	Epoxy-Polyester Covered Aluminum		PG 13.5		•	•
J	316 SST		½–14 NPT		•	•
K	316 SST		CM 20		•	•
L	316 SST		PG 13.5		•	•
Code	**Remote Diaphragm Seals**				**CD**	**CG**
S1	One Remote Seal—Select from Tables 6–16				•	•
S2	Two Remote Seals—Select from Tables 6–16				•	—

(continued on next page)

TABLE 2-3. (continued).

Code	Options	CD	CG
	MOUNTING BRACKETS		
B4	SST Mounting Bracket for 2-in. Pipe and Panel Mount, SST Bolts (for use with *Coplanar* Flange)	•	•
	HAZARDOUS LOCATION CERTIFICATIONS		
E5	Factory Mutual (FM) Explosion-Proof Approval	•	•
I5	Factory Mutual (FM) Non-Incendive and Intrinsic Safety Approval	•	•
C6	Canadian Standards Association (CSA) Explosion-Proof and Intrinsic Safety Approval (Requires 42.4 V dc max. power supply)	•	•
I1	BASEEFA/CENELEC Intrinsic Safety Certification	•	•
N1	BASEEFA Type N Certification	•	•
E8	CESI/CENELEC Flameproof Approval	•	•
E7	Standards Association of Australia (SAA) Flameproof Approval	•	•
E4	Japanese Industrial Standards (JIS) Flameproof Approval	•	•
I7	Standards Association of Australia (SAA) Intrinsic Safety Approval	•	•
	OTHER OPTIONS		
L4	Austenitic 316 SST Bolts	•	•
J1	Local Zero Adjustment Only	•	•
J3	No Local Zero or Span Adjustment	•	•
M5	LCD Meter for Aluminum Housing (Codes A, B, and C)	•	•
M6	LCD Meter for SST Housing (Codes J, K, and L)	•	•
T1(1)	Transient Protection Terminal Block	•	•
C1	Custom Configuration	•	•

NOTE
Local zero and span adjustments are standard unless J1 or J3 options are specified.

Typical Model Number: 3051CD 3 A 2 2 A 1 A S2 B4

(1) Option available with E5, I5, C6, N1, E7, and E8 Hazardous Locations Certifications.

Standard Configuration

Unless otherwise specified, transmitter is shipped as follows:

Engineering units:	inH_2O.
4 mA:	0 inH_2O.
20 mA:	Upper range limit inH_2O.
Output:	Linear.
Flange type:	Specified model code option.
Flange material:	Specified model code option.
O-ring material:	Specified model code option.
Drain/vent:	Specified model code option.
Integral meter:	Installed or none.
Alarm:	Upscale.
Remote seal type:	Specified model code option.
Remote seal fill fluid:	Specified model code option.
Number of remote seals:	Specified model code option.
Software tag:	(Blank).

Customer may specify the above items at no charge. Software tag (8 character maximum) is left blank unless specified.

Shipping Weights

Shipping weight is 5.5 lb (2.5 kg) without options.

Custom Configuration (Option Code C1)

If code C1 is ordered, the customer may specify the following data in addition to the standard configuration parameters. Refer to Configuration Data Sheet CDS 4622/4623.

Descriptor:	16 alphanumeric characters.
Message:	32 alphanumeric characters.
Date:	Day, month, year.
Damping:	Sec.

Tagging

The pressure transmitters will be tagged, at no charge, in accordance with customer requirements. All tags are stainless steel. The standard tag is wired to the transmitter. Tag is 0.020 in. (0.051 cm) thick with 0.125 in. (0.318 cm) high letters. A permanently attached tag is available upon request.

The Model 3051C Pressure Transmitter may be protected by one or more of the following U.S. Pat. No.: 4,370,890; 4,612,812; 4,791,352; 4,798,089; 4,818,994; 4,833,922; 4,866,435; 4,926,340; 4,988,990; 5,028,746. MEXICO PATENTADO NO. 154,961. Mat Depend on Model. Other U.S. and Foreign Patents Issued and Pending.

Model 3051L

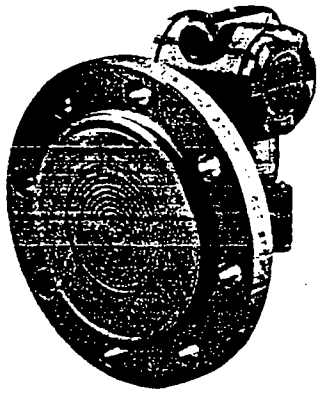

TABLE 2-4. Model 3051L Flange-Mounted Liquid Level Transmitter.

Model	Transmitter Type
3051L	Flange Mounted Liquid Level Transmitter

Code	Ranges
2	0–8.3 to 0–250 inH_2O (0–2.07 to 0–62.2 kPa)
3	0–33.3 to 0–1,000 inH_2O (0–8.28 to 0–248 kPa)
4	0–277 to 0–8,310 inH_2O (0–0.07 to 0–2070 kPa)

Code	Output
A	4–20 mA with Digital Signal Based on *HART* Protocol

Code	HIGH PRESSURE SIDE Diaphragm Size	Material	Extension Length	
G0	2 in.	316L SST	Flush Mount Only	When specifying this option code, a lower housing must be selected from the flushing connection options table.
H0	2 in.	*Hastelloy*	Flush Mount Only	
J0	2 in.	Tantalum	Flush Mount Only	
A0	3 in.	316L SST	Flush Mount	
A2	3 in.	316L SST	2 in.	
A4	3 in.	316L SST	4 in.	
A6	3 in.	316L SST	6 in.	
B0	4 in.	316L SST	Flush Mount	
B2	4 in.	316L SST	2 in.	
B4	4 in.	316L SST	4 in.	
B6	4 in.	316L SST	6 in.	
C0	3 in.	*Hastelloy*	Flush Mount	
C2	3 in.	*Hastelloy*	2 in.	
C4	3 in.	*Hastelloy*	4 in.	
C6	3 in.	*Hastelloy*	6 in.	
D0	4 in.	*Hastelloy*	Flush Mount	
D2	4 in.	*Hastelloy*	2 in.	
D4	4 in.	*Hastelloy*	4 in.	
D6	4 in.	*Hastelloy*	6 in.	
E0	3 in.	Tantalum	Flush Mount Only	
F0	4 in.	Tantalum	Flush Mount Only	

NOTE
Extension diameters are sized to fit Schedule 80 pipe. Consult factory for Schedule 40 pipe.

Code	MOUNTING FLANGE Size	Rating	Material	Applicable Size Codes
A	3 in.	Class 150	Carbon Steel	A, C, and E
B	4 in.	Class 150	Carbon Steel	B, D, and F
C	3 in.	Class 300	Carbon Steel	A, C, and E
D	4 in.	Class 300	Carbon Steel	B, D, and F
M	2 in.	Class 150	Carbon Steel	G, H, and J
N	2 in.	Class 300	Carbon Steel	G, H, and J
F	3 in.	Class 150	316 SST	A, C, and E
G	4 in.	Class 150	316 SST	B, D, and F
H	3 in.	Class 300	316 SST	A, C, and E
J	4 in.	Class 300	316 SST	B, D, and F
X	2 in.	Class 150	316 SST	G, H, and J
Y	2 in.	Class 300	316 SST	G, H, and J

(continued on next page)

TABLE 2-4. (continued).

Code	Fill Fluid
D	*D.C.* 200 Silicone
H	Inert
S	*Syltherm* 800
G	Glycerin and Water
N	*Neobee M-20*
P	Propylene Glycol and Water

Code	LOW PRESSURE SIDE Configuration	Flange/Adapter	Transmitter Diaphragm Material	Sensor Fill Fluid
11	Gage	SST	316L SST	Silicone
21	Differential	SST	316L SST	Silicone
22	Differential	SST	*Hastelloy C-276*	Silicone
2A	Differential	SST	316L SST	Inert
2B	Differential	SST	*Hastelloy C-276*	Inert
31	Remote Seal (Requires Option Code S1)	SST	316L SST	Silicone

Code	O-ring Material
A	Glass-filled TFE

Code	Housing Material	Conduit Entry Size
A	Epoxy-Polyester Covered Aluminum	1/2–14 NPT
B	Epoxy-Polyester Covered Aluminum	CM 20
C	Epoxy-Polyester Covered Aluminum	PG 13.5
J	316 SST	1/2–14 NPT
K	316 SST	CM 20
L	316 SST	PG 13.5

Code	*Remote Diaphragm Seal*
S1	*Assembly of One Remote Seal*

Code	Options
	HAZARDOUS LOCATIONS CERTIFICATIONS
E5	Factory Mutual (FM) Explosion-Proof Approval
I5	Factory Mutual (FM) Non-Incendive and Intrinsic Safety Approval
C6	Canadian Standards Association (CSA) Explosion-Proof and Intrinsic Safety Approval (Requires 42.4 V dc max. power supply)
I1	BASEEFA/CENELEC Intrinsic Safety Certification
N1	BASEEFA Type N Certification
E8	CESI/CENELEC Flameproof Certification
E7	Standards Association of Australia (SAA) Flameproof Certification
E4	Japanese Industrial Standards (JIS) Flameproof Certification
I7	Standards Association of Australia (SAA) Intrinsic Safety Certification
	OTHER OPTIONS
L4	Austenitic 316 SST Bolts
J1	Local Zero Adjustment Only
J3	No Local Zero Or Span Adjustment
M5	LCD Meter for Aluminum Housing (Codes A, B, and C)
F_	See the Following Flushing Connections Options Table for Availability.

NOTE
Local zero and span adjustments are standard unless J1 or J3 options are specified.

Flushing Connection Options Table.

Code	Lower Housing Material	Number of Flushing Connections
F1	SST	1
F2	SST	2
F3(1)	*Hastelloy*	1
F4(1)	*Hastelloy*	2
FA	SST	0
FC(2)	*Hastelloy*	0

(1) Not available with high pressure side Option Codes A0, B0, and G0.
(2) Not available with high pressure side Option Code G0.

Typical Model Number: 30151L 2 A A0 A D 31 A A S1

TABLE 2-4. (continued).

Output Code(s) (Smart Transmitter)

Standard Configuration

Unless otherwise specified, transmitter is shipped as follows:

Engineering units:	inH_2O (Ranges 2 and 3). psi (Range 4).
4 mA:	0 inH_2O (Ranges 2 and 3). 0 psi (Range 4).
20 mA:	Upper range limit.
Output:	Linear.
Flange Type:	Specified model code option.
Flange material:	Specified model code option.
O-ring material:	Specified model code option.
Drain/vent:	Specified model code option.
Integral meter:	Specified model code option.
Alarm:	Upscale
Software tag:	(Blank). Software tag (8 character maximum) is left blank unless specified.
Remote seal type:	Specified model code option.
Remote seal fill fluid:	Specified model code option.
Number of remote seals:	Specified model code option.

Customer may specify the above items at no charge.

Custom Configuration (Option Code C1)

If Option Code C1 is ordered, the customer may specify the following data in addition to the standard configuration parameters. Refer to Configuration Data Sheet CDS 4622/4623.

Descriptor:	16 alphanumeric characters.
Message:	32 alphanumeric characters.
Date:	Day, month, year.
Damping:	Seconds.

Tagging

The liquid level transmitters will be tagged, at no charge, in accordance with customer requirements. All tags are stainless steel. The standard tag is wired to the transmitter. Tag is 0.020 in. (0.051 cm) thick with 0.125 in. (0.318 cm) high letters. A permanently attached tag is available upon request.

Shipping Weight

See table below.

Transmitter Weights in lb (kg) with Level Process Connection.(1)

Flange	Flush	2-in. Ext.	4-in. Ext.	6-in. Ext.
2 in., Class 150	12.0 (5.5)	—	—	—
3 in., Class 150	17.0 (7.7)	19.0 (8.6)	20.0 (9.1)	21.0 (9.5)
4 in., Class 150	23.0 (10.5)	26.0 (11.8)	28.0 (12.7)	30.0 (13.6)
2 in., Class 300	17.0 (7.7)	—	—	—
3 in., Class 300	22.0 (10.0)	24.0 (10.9)	25.0 (11.4)	26.0 (11.8)
4 in., Class 300	32.0 (14.5)	35.0 (15.9)	37.0 (16.8)	39.0 (17.7)

(1) For meter option add 0.5 lb (0.2 kg).

Model 2088

TABLE 2-5. Model 2088G Gage Pressure Transmitters.

Model	Transmitter Type (Select One)		
2088G	Gage Pressure Transmitter		
Code	**Range**		
1	0–5 to 0–30 psi (0–34.47 to 0–206.84 kPa)		
2	0–25 to 0–150 psi (0–0.17 to 0–1,030 kPa)		
3	0–133 to 0–800 psi (0–0.92 to 0–5,520 kPa)		
Code	**Output**		
A	4–20 mA dc		
Code	**MATERIALS OF CONSTRUCTION** Process Connection	Isolating Diaphragm	Oil Fill
22[1]	316SST	316 SST	Silicone
Code	**Process Connection**		
A	½–14 NPT Female		
B	DIN 16288 G ½ Male		
Code	**Conduit Thread**		
1	½–14 NPT		
2	CM 20		
3	PG 13.5		
Code	**Remote Seal Connection**		
S1	One Remote Seal		
Code	**Options**		
B4	SST Mounting Bracket with SST Bolt		
I1	BASEEFA EEx ia IIC T5 (CENELEC) Intrinsic Safety Certification (Entity Concept)		
N1	BASEEFA Type N EX N IIC T5		
E8	CESI EEx d IIC T6 (CENELEC) Explosion-Proof Certification		
I5	Factory Mutual (FM) Non-Incendive and Intrinsic Safety Certification (Entity Concept)		
E5	Factory Mutual (FM) Explosion-Proof Certification		
C6	Canadian Standards Association (CSA) Explosion-Proof, Intrinsic Safety, and Non-Incendive Certification		
M5	LCD Meter		
Typical Model Number:	**2088G 1 A 22 A 1 S1 B4**		

(1) Meets NACE material recommendations per MR 01-75.

Calibration

Transmitters are factory calibrated to customer's specified range. If calibration is not specified, transmitters are calibrated at maximum range. Calibration is at ambient temperature and pressure.

Shipping Weight

2 lb (0.9 kg) excluding options.

Tagging

The pressure transmitters will be tagged, at no charge, in accordance with customer requirements. All tags are stainless steel. The standard tag is wired to the transmitter. Tag is 0.020 in. (0.051 cm) thick with 0.125 in. (0.318 cm) high letters. A permanently attached tag is available upon request.

The Model 2088 Pressure Transmitter may be protected by the following U.S. Patent Nos.: 4,970,898 and 5, 083,091. May depend on Model. Other U.S. and Foreign Patents Issued and Pending.

SECTION
3

Remote Diaphragm Seal Ordering Tables

PFW

TABLE 3-1. Pancake Remote Seal.

Model	Seal Type	
1199PFW	Pancake Remote Seal(1)	
Code	**Type**	
11	Standard 3-in., Maximum Working Pressure per Standard ASA Flange Rating	
Code	**Seal Diaphragm Material**	
A	316L SST	
B	*Hastelloy C-276*	
C	Tantalum	
Code	**Housing Material**	
11	316L SST	
Code	**Optional Flushing Connection(2)**	**Material**
F11	One Flushing Connection	Carbon Steel
F12	One Flushing Connection	316 SST
F13	One Flushing Connection	*Hastelloy C-276*
F21	Two Flushing Connections	Carbon Steel
F22	Two Flushing Connections	316 SST
F23	Two Flushing Connections	*Hastelloy C-276*
Typical Model Number:	1199PFW 11 A 11	

(1) For Class 150, 300, and 600 flanges.
(2) A Thermotork gasket is supplied with the flushing connection. No code denotes no flushing connection.

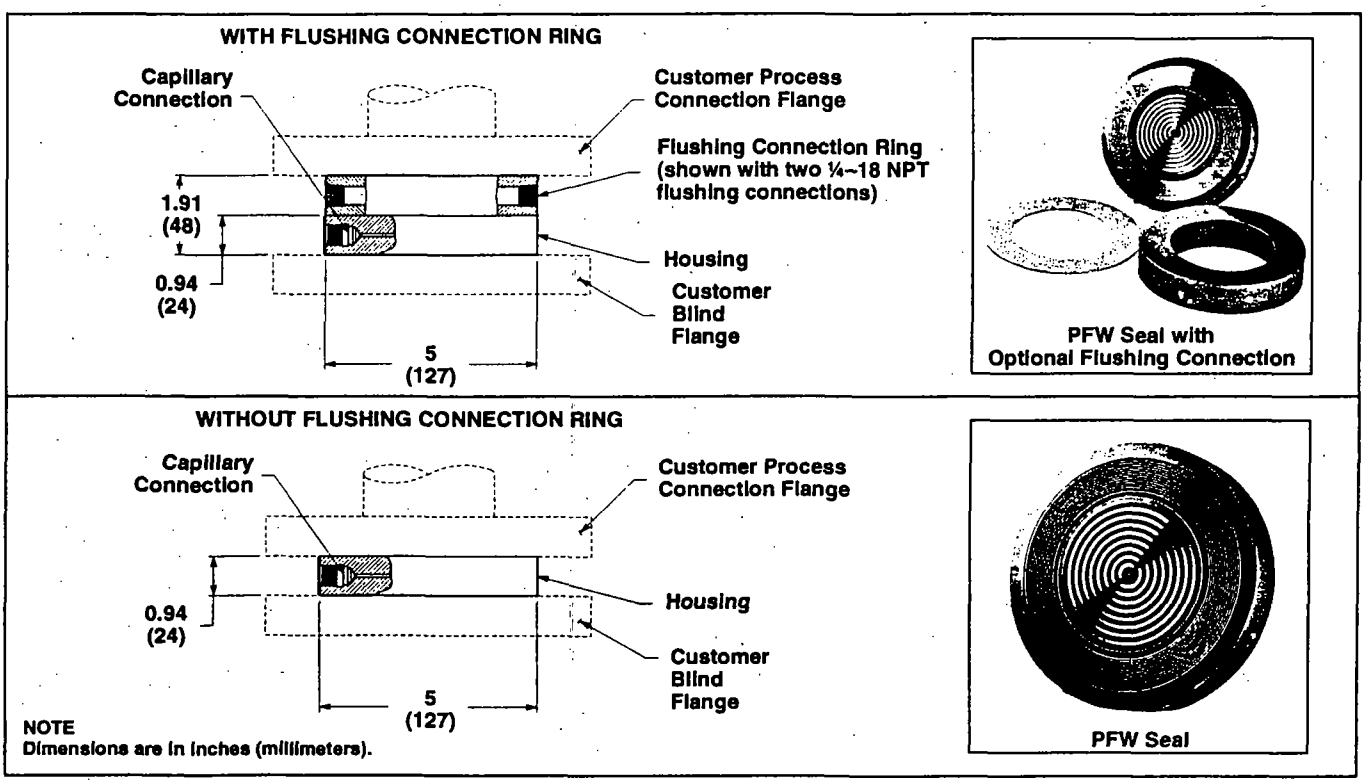

FIGURE 3-1. 1199PFW Pancake Remote Seal.

FFW

TABLE 3-2. Flush Flanged Remote Seal Assembly.

Model	Seal Type
1199FFW(1)	Flush Flanged Remote Seal with Flanged Process Connection and Welded Metal Diaphragm

Code	Process Connection
09	2 in.(2)
11	3 in.
13	4 in.

Code	Diaphragm
A	316L SST
B	*Hastelloy C-276*
C	Tantalum

Code	Housing Material
11	Class 150 Carbon Steel
12	Class 300 Carbon Steel
14	Class 600 Carbon Steel
31	Class 150 316 SST
32	Class 300 316 SST
34	Class 600 316 SST

Flange Rating	Max. Working Pressure at 100 °F (38 °C)	
	Carbon Steel	SST
150	285 psi	275 psi
300	740 psi	720 psi
600	1,480 psi	1,440 psi

Code	Optional Flushing Connection	Material
F01	No Flushing Connection	Carbon Steel (2-inch only)
F02	No Flushing Connection	316 SST, (2-inch only)
F03	No Flushing Connection	*Hastelloy C-276*, (2-inch only)
F11	One Flushing Connection	Carbon Steel
F12	One Flushing Connection	316 SST
F13	One Flushing Connection	*Hastelloy C-276*
F21	Two Flushing Connection	Carbon Steel
F22	Two Flushing Connection	316 SST
F23	Two Flushing Connection	*Hastelloy C-276*

Typical Model Number: 119FFW 11 A 11

(1) For an integral mount version of this seal, order a Model 1151LT or 3051L Level Transmitter.

(2) A lower housing is required for all 2-in. process connections. When flushing connection is specified for 2-in., 3-in., or 4-in. process connections, the lower housing material is also selected. A Thermotork *gasket is supplied with the lower housing.*

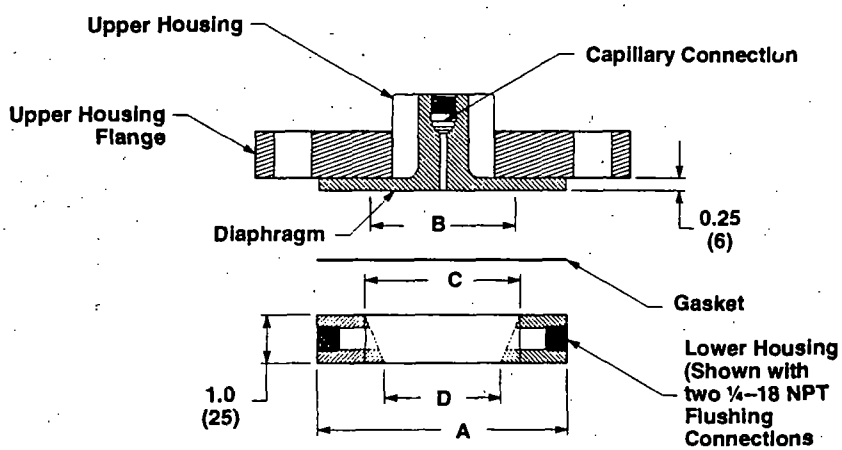

Size	A	B	C	D
2 in.	3.75 (95)	2.90 (74)	2.90 (74)	2.16 (55)
3 in.	5.00 (127)	2.90 (74)	3.11 (79)	3.11 (79)
4 in.	6.14 (156)	3.60 (91)	4.06 (103)	4.06 (103)

NOTE
Dimensions are in inches (millimeters).

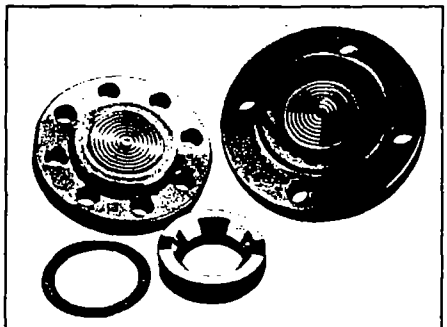

2-in. FFW Seal with Lower Housing and 3-in. FFW Seal

2- and 3-in. FFW Seals with Flushing Connections

1199-3051F23A

FIGURE 3-2. Model 1199FFW Flush Flanged Remote Seal Assembly.

RFW

TABLE 3-3. Flanged Remote Seal Assembly.

Model	Seal Type
1199RFW	Flanged Remote Seal Assembly
Code	**Flushing Connection**
11	No Connection
21	Flushing Connection Provided
Code	**Seal Diaphragm Material**
A	316L SST
B	*Hastelloy C-276*
C	Tantalum
Code	**Materials of Construction**
11	316 SST Upper Housing, Plated Carbon Steel Flange, *Thermotork Gasket*
31	316 SST Upper Housing, 316 SST Mounting Flange, *Thermotork Gasket*
Code	**Lower Housing Material**
A	316L SST
B	*Hastelloy C-276*
C	Plated Carbon Steel
Code	**Housing Material**
21	1 in. Class 150
41	1½ in. Class 150
51	2 in. Class 150
71	3 in. Class 150
22	1 in. Class 300
42	1½ in. Class 300
52	2 in. Class 300
72	3 in. Class 300
24	1 in. Class 600
44	1½ in. Class 600
54	2 in. Class 600
74	3 in. Class 600
91	4 in. Class 150
92	4 in. Class 300
94	4 in. Class 600
Code	**Options**
M0004	*Teflon* Gasket
M0011	Ethylene Propylene Gasket
M0041	Two Flushing Connections (For use with flushing connection Code 21 above)
M0040	Combination of M0041 and M0004
Typical Model Number:	1199RFW 11 A 11 A 21

Flange Rating	Max. Working Pressure at 100 °F (38 °C)	
	Carbon Steel	**SST**
150	285 psi	275 psi
300	740 psi	720 psi
600	1,480 psi	1,440 psi

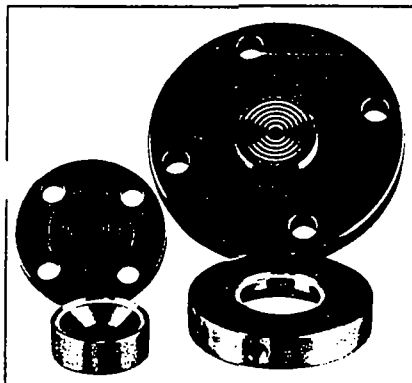

1- and 3-in. RFW Seals

Process Connection Size	Diameter A Lower Housing Diameter
1 in.	2.62 (67)
1½ in.	3.10 (79)
2 in.	3.75(95)
3 in.	5.00 (127)
4 in.	6.19 (157)

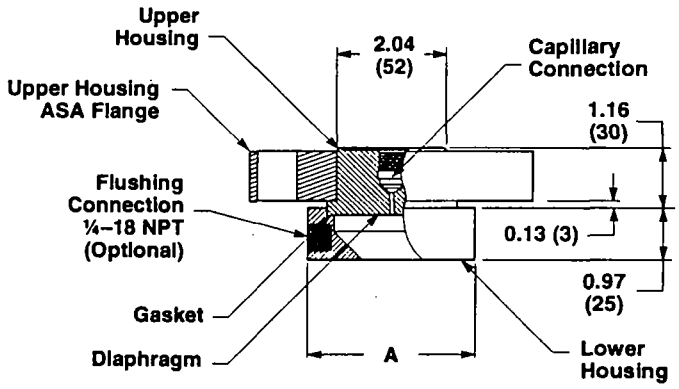

NOTE
Dimensions are in inches (millimeters).

FIGURE 3-3. Model 1199RFW Flanged Remote Seal Assembly.

EFW

TABLE 3-4. Extended Flanged Diaphragm Assembly.

Model	Seal Type
1199EFW(1)	Extended Flanged Diaphragm Assembly (for Schedule 80 pipe)
Code	**Extension Diameter and Wetted Parts Material**
11	3 in. 316L SST
12	3 in. *Hastelloy C-276*
13	4 in. 316L SST
14	4 in. *Hastelloy C-276*
Code	**Seal Diaphragm Material**
A	316L SST
B	*Hastelloy C-276*
Code	**Extension Length**
20	2 in.
40	4 in.
60	6 in.
Code	**Flange Material**
A	Plated Carbon Steel
B	316 SST
Code	**Flange Rating**
11	Class 150
12	Class 150
13	Class 150

Flange Rating	Max. Working Pressure at 100 °F (38 °C)	
	Carbon Steel	SST
150	285 psi	275 psi
300	740 psi	720 psi
600	1,480 psi	1,440 psi

Code	Options
M0080	Larger diameter barrel to provide outside diameter on 2.875 in. for use with Schedule 40 pipes or head boxes

Typical Model Number: 1199EFW 11 A 20 A 11

(1) For an integral mount version of this seal, order a Model 1151LT or 3051L Level Transmitter.

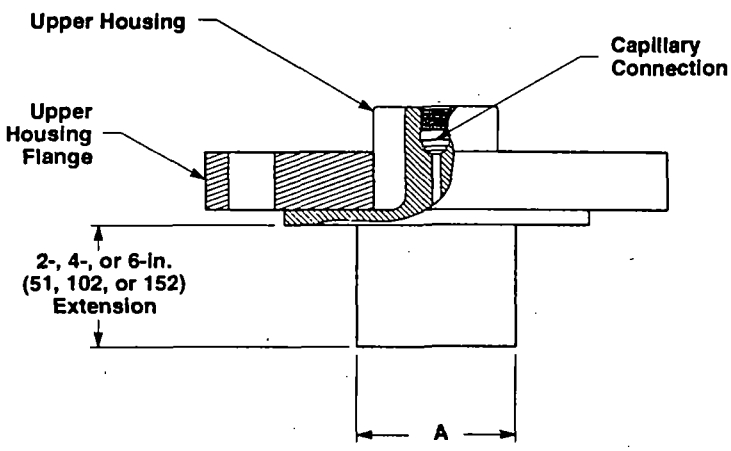

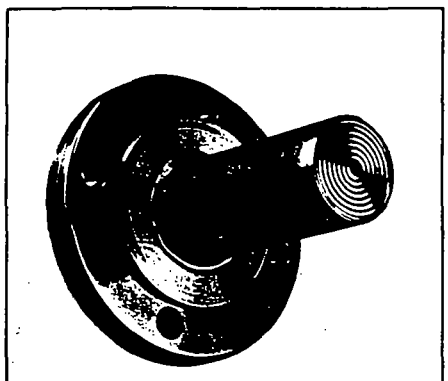

Extended EFW Seal

Process Connection Size	Flange Rating	Diameter A
3-in.	All	2.58 (66)
4-in.	All	3.50 (89)

NOTE
Dimensions are in inches (millimeters).

1199-3051C23A

FIGURE 3-4. Model 1199EFW Extended Flanged Diaphragm Assembly.

TABLE 3-5. Threaded Remote Seal Assembly.

Model	Seal Type
1199RTW	Threaded Remote Seal Assembly(1)
Code	**Flushing Connections**
11	No Connection
21	Flushing Connection Provided
Code	**Seal Diaphragm Material**
A	316L SST
B	*Hastelloy C-276*
C	Tantalum
Code	**Materials of Construction**
11	316 SST Upper Housing, Carbon Steel Mounting Ring, *Thermotork* Gasket
31	316 SST Upper Housing, 316 SST Mounting Ring, *Thermotork* Gasket
Code	**Lower Housing Material**
A	316 SST
B	*Hastelloy C*
E	Plated Carbon Steel
Code	**Process Connection**
11	¼–18 NPT
12	3/8–18 NPT
13	½–14 NPT
14	¾–14 NPT
15	1–11.5 NPT
17	1½–11.5 NPT (flushing connection not available)
Code	**Options**
M0004	Teflon Gasket
M0011	Ethylene Propylene Gasket
M0013	¼-in. Hastelloy Lower Housing for Pipe Weld
M0014	Combination of M0013 and M0004 for Hastelloy Lower Housing
M0020	¼-in. 316 SST Lower Housing for Pipe Weld and Teflon Gasket
Typical Model Number:	1199RTW 11 A 11 A 13

(1) Maximum working pressure is 2,000 psi.

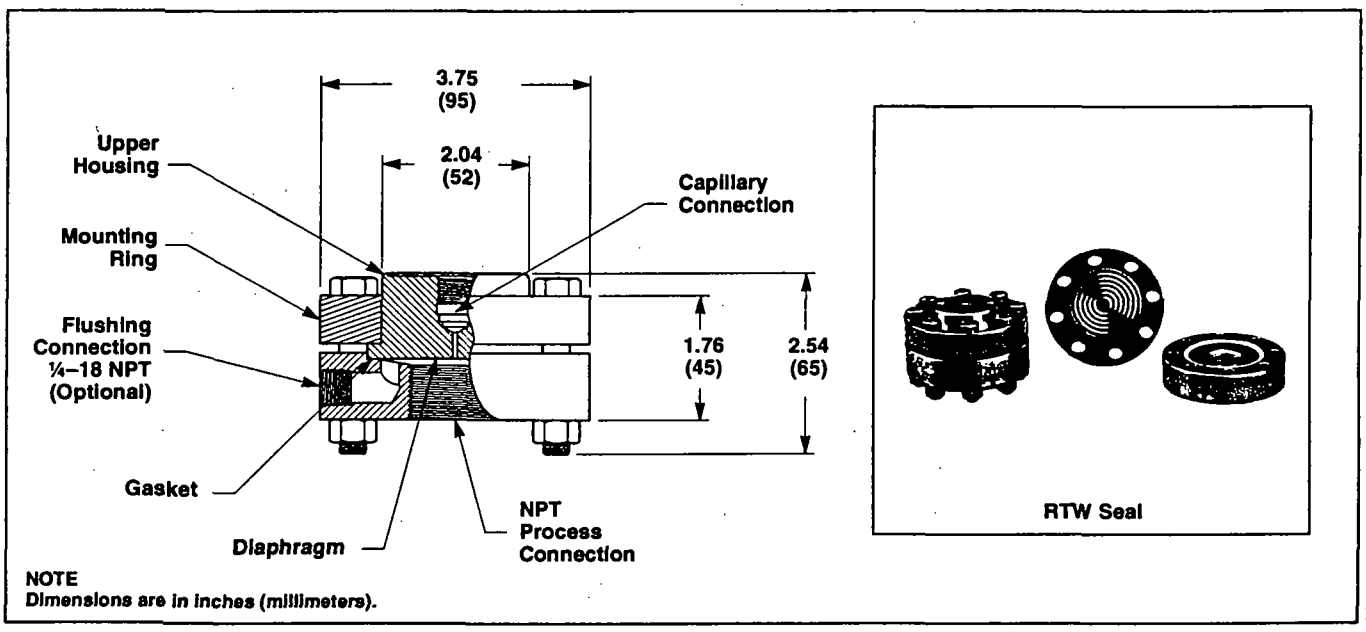

FIGURE 3-5. Model 1199RTW Threaded Remote Seal Assembly.

CTW

TABLE 3-6. Chemical Tee Remote Assembly.

Model	Seal Type
1199CTW	Chemical Tee Remote Seal Assembly
Code	**Type**
11	Standard, 1,000 psi Max. Working Pressure
Code	**Seal Diaphragm Material**
A	316L SST
B	*Hastelloy C-276*
C	Tantalum
Code	**Housing Material (wetted)**
11	316 SST
Typical Model Number:	**1199CTW 11 A 11**

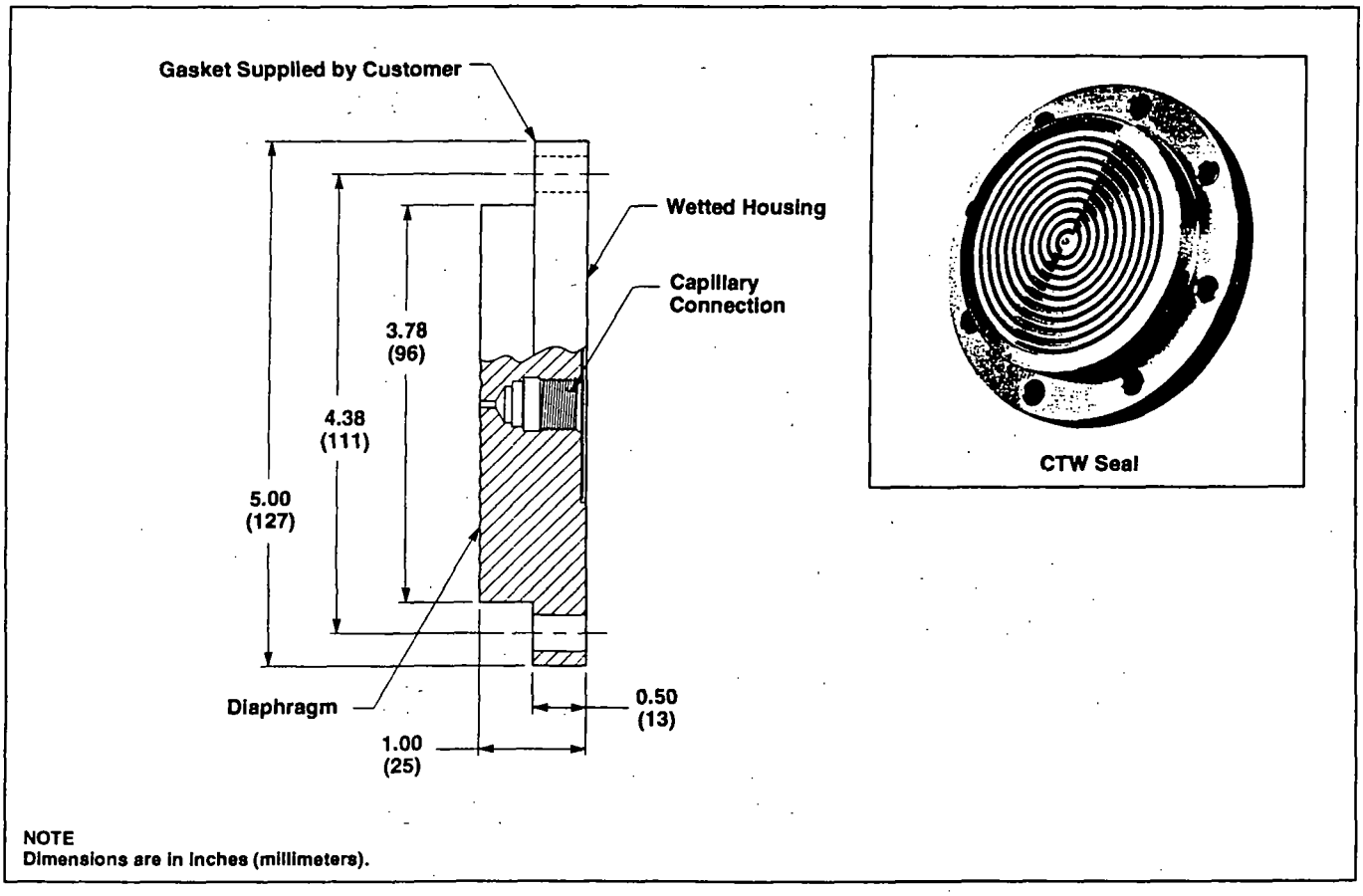

FIGURE 3-6. Model 1199 CTW Chemical Tee Remote Seal Assembly.

UCW

TABLE 3-7. Union Connection Seal.

Model	Seal Type	
1199UCW(1)	Union Connection Seal	
Code	**O-ring Material**	
11	Teflon, 2,000 psi Max. Working Pressure	
Code	**Seal Diaphragm**	**Housing Material**
A11	316L SST	316 SST
B12	*Hastelloy C-276*	*Hastelloy C-276*
Typical Model Number:	**1199UCW 11 A11**	

(1) With the Model 3051C and a single-seal application, the UCW seal is limited to Range 3 and above.

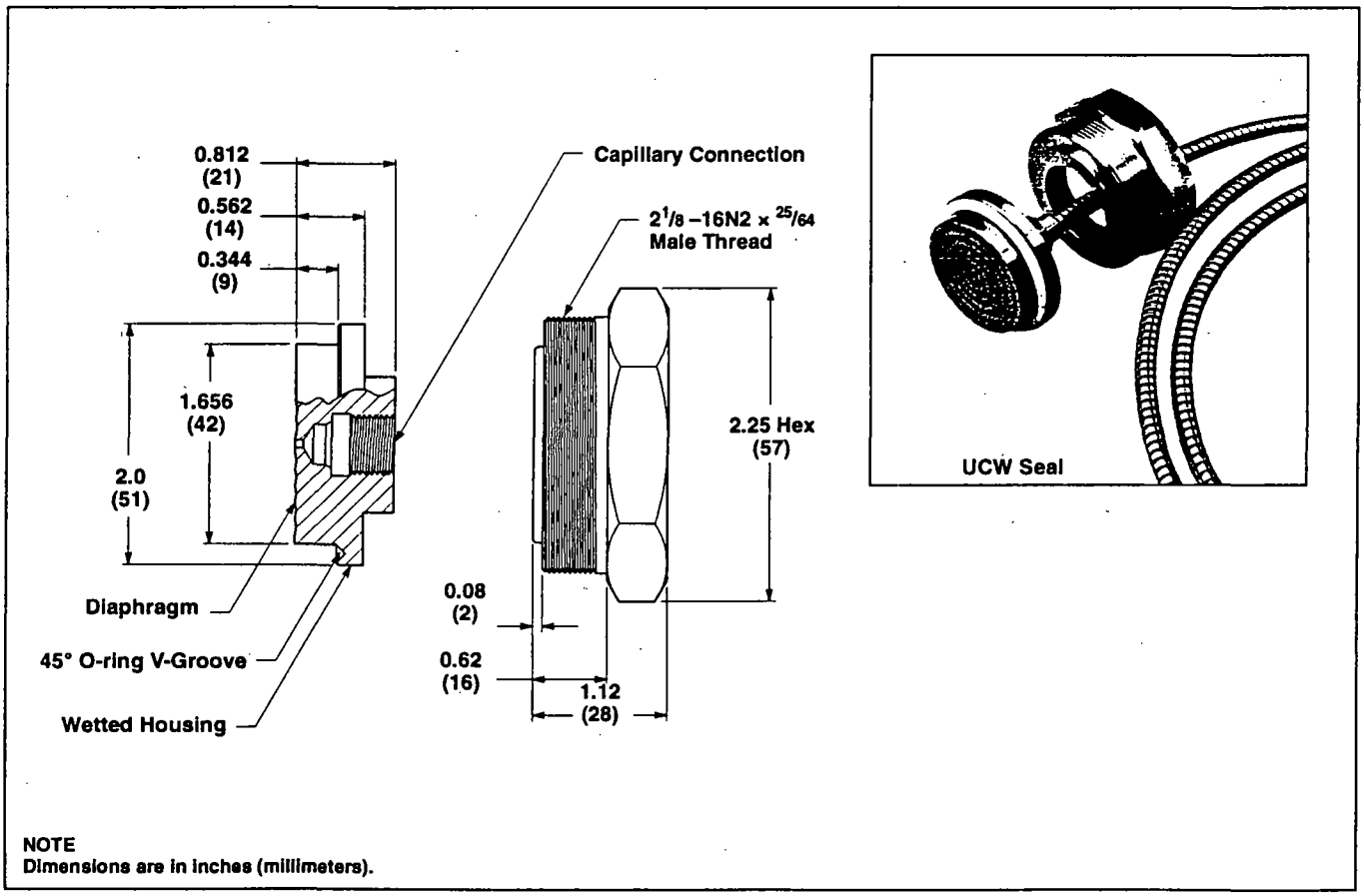

FIGURE 3-7. Model 1199UCW Union Connection Seal.

SCW

3-A 37-01

TABLE 3-8. Sanitary Tri-Clamp Remote Seal.

Model	Seal Type
1199SCW(1)	Sanitary *Tri-Clamp* Remote Seal(2)—Conforms to *3-A* Standards and USDA Approval
Code	**Seal Type**
11	2-in. *Tri-Clamp* (Capillary Configuration)
12	3-in. *Tri-Clamp* (Capillary Configuration)
13	2-in. *Tri-Clamp* (Integral Mount Configuration) } for Model 1151 only
14	3-in. *Tri-Clamp* (Integral Mount Configuration) } for Model 1151 only
54	2-in. *Tri-Clamp* (Integral Mount Configuration for Two-Seal Systems) } for Model 3051C only
55	2-in. *Tri-Clamp* (Integral Mount Configuration for One-Seal Systems) } for Model 3051C only
64	3-in. *Tri-Clamp* (Integral Mount Configuration for Two-Seal Systems) } for Model 3051C only
65	3-in. *Tri-Clamp* (Integral Mount Configuration for One-Seal Systems) } for Model 3051C only
Code	**Seal Diaphragm Material**
A	316L SST
B	*Hastelloy C-276*
Code	**Housing Material**
11	316L SST
Code	**Options**
M0044	Internal Copper O-ring (for Option Codes 13 and 14 only)(3)
Typical Model Number:	**1199SCW 12 A 11 M0044**

(1) Integral mount on high side. Tri-Clamp *gasket and clamp furnished by user.*
(2) Maximum working pressure from clamp detail, Table 13a.
(3) Recommended when seal will be used in a vacuum application.

Table 13a. Clamp Detail.

Clamp Model	psi @ 70 °F	psi @ 250 °F
13MLHA	150	125
13MHHM	(2-in.) 450	250
	(3-in.) 350	150
13MHP	1,000	800

Seal Diameter	A	B
2 (51)	2.52 (64)	2.22 (56)
3 (76)	3.58 (91)	3.28 (93)

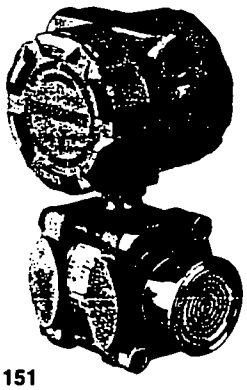

Model 1151 with Integral Mount 2-in. SCW Seal

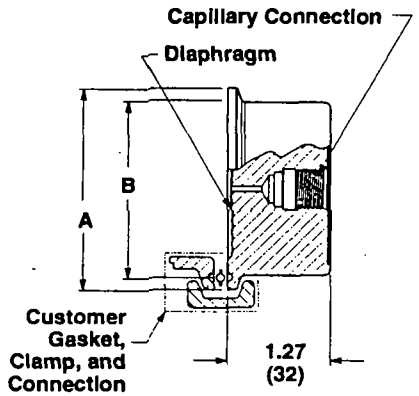

CAPPILLARY CONFIGURATION (CODES 11 AND 12)

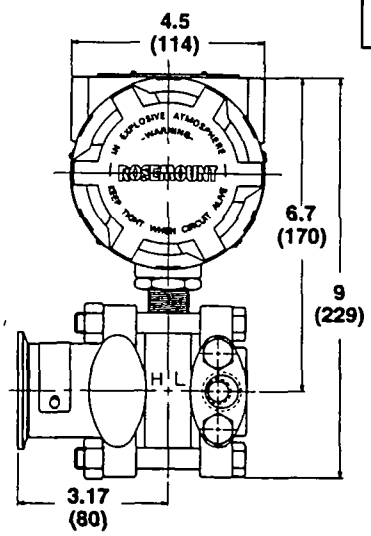

CODES 13 AND 14

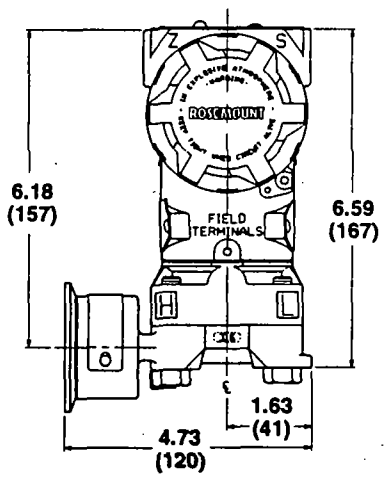

CODES 54, 55, 64, AND 65

NOTE
Dimensions are in inches (millimeters).

1199-3051F26A 1199-1151C25A 1199-3051A24A

FIGURE 3-8. Model 1199SCW Sanitary Tri-Clamp Remote Seal.

SSW

3-A® 37-01

TABLE 3-9. Sanitary Tank Spud Seal.

Model	Seal Type		Base
1199SSW[1]	Sanitary Tank Spud Seal[2]—Conforms to *3-A* Standards and USDA Approval		$765
Code	**Style**		**Add**
12	Capillary Configuration—2-in. Extension		NC
14[3]	Integral Mount Configuration—2-in. (for Model 1151 only)		45
22	Capillary Configuration—6-in. Extension		145
24[3]	Integral Mount Configuration—6-in. (for Model 1151 only)		180
54[3]	Integral Mount Configuration—2-in. Extension—Two Seal-System	for Model 3051C only	45
55[3]	Integral Mount Configuration—2-in. Extension—One Seal-System		45
64[3]	Integral Mount Configuration—6-in. Extension—Two Seal-System		180
65[3]	Integral Mount Configuration—6-in. Extension—One Seal-System		180
Code	**Diaphragm and Wetted Housing Material/O-ring Material**		**Add**
A	316L SST/*Ethylene Propylene*		NC
B	*Hastelloy C-276*/Ethylene Propylene		300
Code	**Housing Material (Nonwetted)**		**Add**
11	316 SST		NC
Code	**Options**		**Add**
M0044	Internal Copper O-ring (for Codes 14 and 24 only)[4]		NC
Typical Model Number:	**1199SSW 12 A 11**		**S765**

(1) The O-ring and clamp are provided. See Table 15 for tank spud.
(2) Maximum working pressure is 300 psi (2.07 MPa) with supplied clamp.
(3) Unless otherwise specified, Integral Mounted Remote Seal will be placed on the transmitter's high pressure side.
(4) Recommended when seal will be used in a vacuum application.

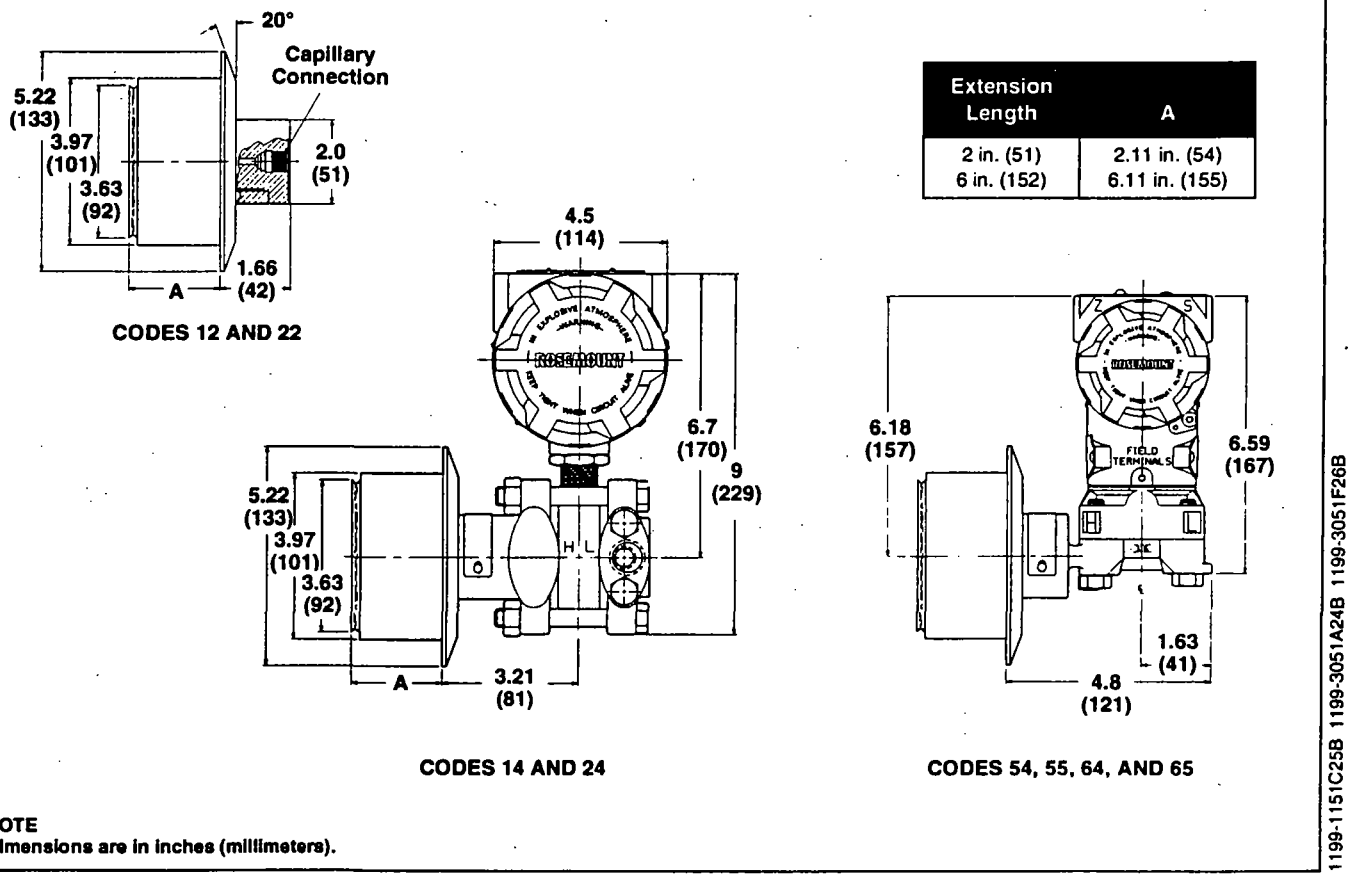

FIGURE 3-9. Model 1199SSW Sanitary Tank Spud Seal.

SPUD

37-01

TABLE 3-10. Sanitary Tank Spud

Model	Seal Type
01199-0061-(1)	Sanitary Tank Spud
Code	**Size**
0001	2-in. Extension
0002	3-in. Extension
Typical Model Number:	**01199-0061-0001**

(1) For use with Model 1199SSW seal (Refer to Table 14.) Welding procedures and material certifications are shipped with the tank spud. Material Cast 316L SST per CF3M Specification.

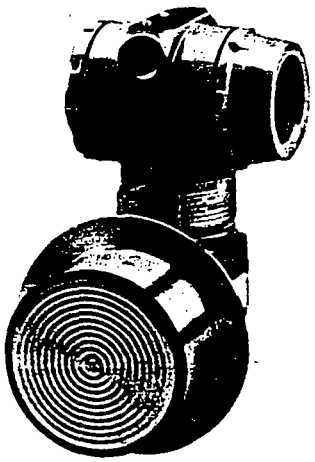

MODEL 3051 WITH INTEGRAL MOUNT SSW

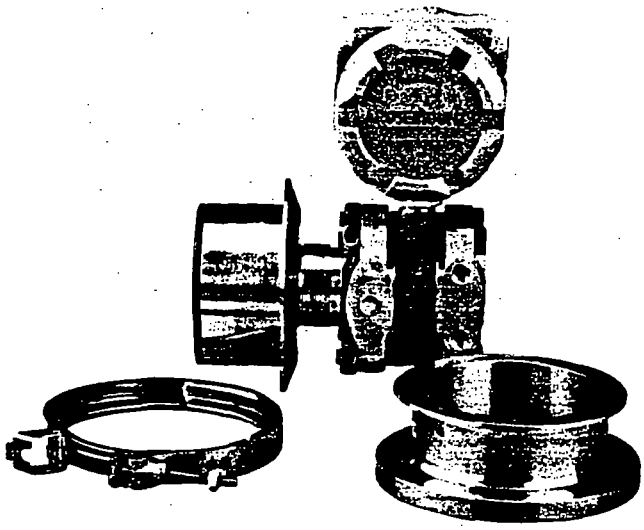

TANK SPUD AND MODEL 1151 WITH INTEGRAL MOUNT SSW

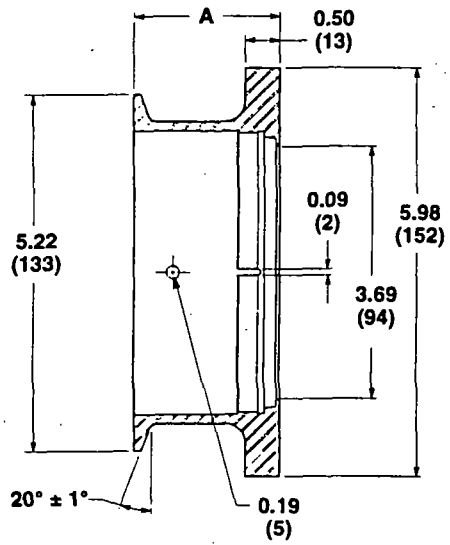

Extension Length	A
2 in. (51)	2.11 in. (54)
6 in. (152)	6.11 in. (155)

NOTE
Dimensions are in inches (millimeters).

1199-3051A26A

FIGURE 3-10. Model 1199SPUD Sanitary Tank Spud.

TSW

3-A® 37-01

TABLE 3-11. Sanitary Thin-Wall Level Remote Seal.

Model	Seal Type
1199TSW(1)	Sanitary Thin-Wall Level Remote Seal(2)—Conforms to *3-A* Standards and USDA Approval
Code	**Seal Style—Capillary Configuration Only**
11	Clamp Connection
Code	**Diaphragm and Wetted Housing Material/O-ring Material**
A11	316L SST/Ethylene Propylene
B11	*Hastelloy C-276*/Ethylene Propylene
Typical Model Number:	**1199TSW 11 A11**

(1) For tank walls up to 3/16 -in. thick, the clamp is included.
(2) Maximum working pressure is 300 psi (2.07 MPa) with supplied clamp. Consult factory if thin-wall tank spud is required.

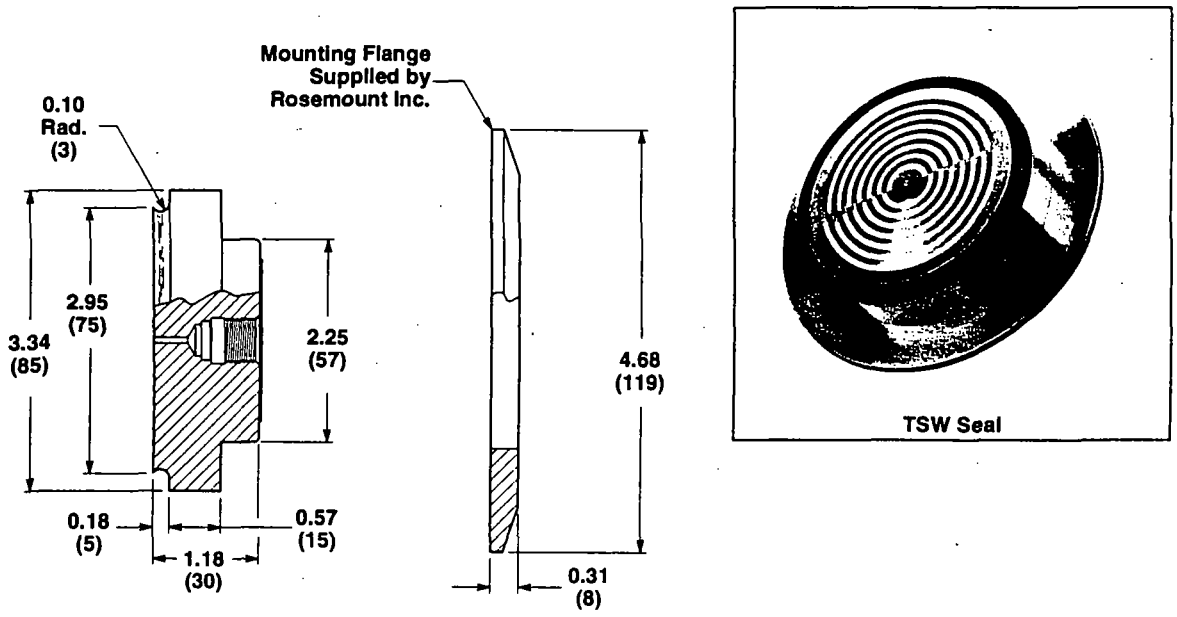

NOTE
Dimensions are in inches (millimeters).

1199-3051B26A

FIGURE 3-11. Model 1199TSW Sanitary Thin-Wall Remote Seal.

CAP

TABLE 3-12. Capillary Tubing.

Model	Seal Type
1199CAP	Capillary Tubing
Code	**Capillary Material and Size[1]**
11	316 SST, 0.028-in. ID
13	316 SST, 0.043-in. ID
Code	**Fitting, Transmitter End**
D	½–20 UNF Low-Volume Fitting
Code	**Length of Capillary**
05	5 ft (1.5 m)
10	10 ft (3.0 m)
15	15 ft (4.6 m)
20	20 ft (6.1 m)
25	25 ft (7.6 m)
Code	**Fitting, Remote End**
A	½–20 UNF Low-Volume Fitting, *Rosemount* Seals
B	¼–18 NPT Fitting, Other Manufacturers' Seals
C	½–20 UNF Low-Volume Fitting with Support Tube, *Rosemount* Seals[2]
D	½–20 UNF Low-Volume Fitting with Support Tube and Weld Nugget (for use with UCW Seal)
Code	**Protective Sleeving**
11	Armored 300 Series SST
12	White PVC-coated, Armored 300 Series SST
Code	**Options**
M0044	Internal Copper O-ring (for Model 1151 only)[3]
Typical Model Number:	1199CAP 11 D 05 A 11

(1) Code 13 will provide a faster time response. Code 11 will minimize fill fluid volume for better temperature effects.
(2) Recommended for use with PFW seals or when extra mounting support is desired.
(3) Recommended for vacuum applications (not a wetted part.)

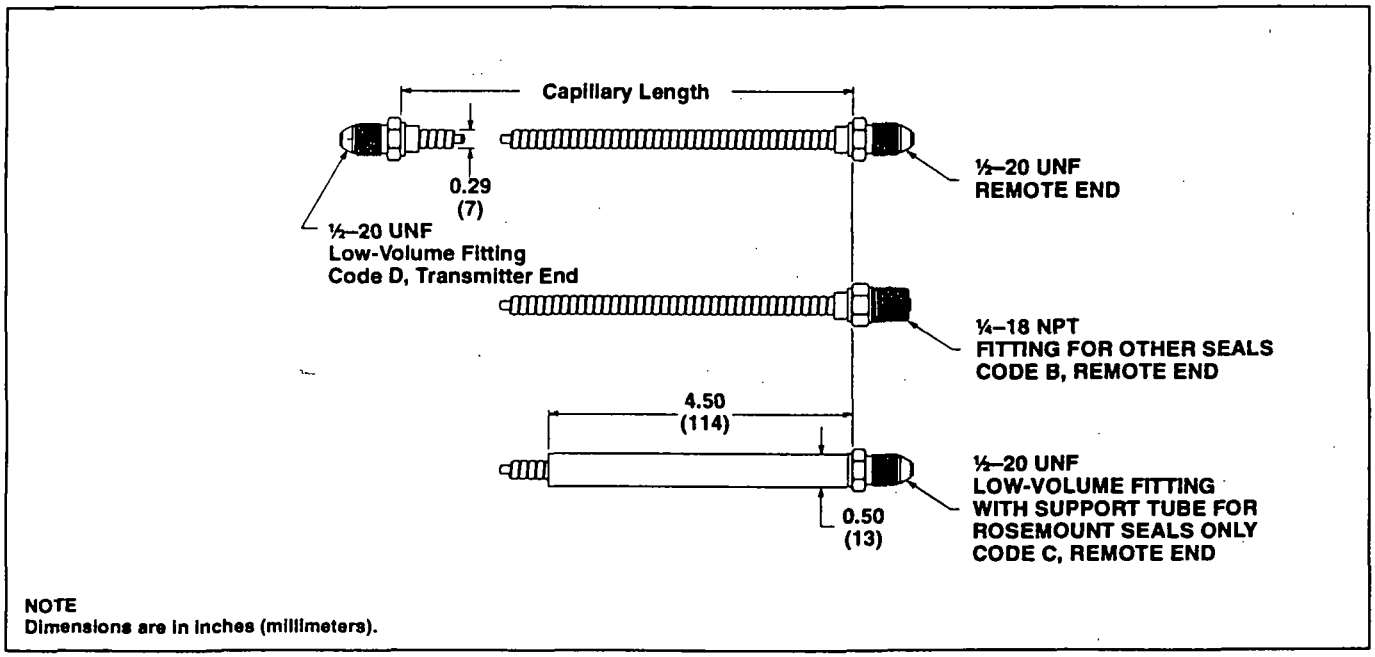

NOTE
Dimensions are in inches (millimeters).

FIGURE 3-12. Model 1199CAP Capillary Tubing.

CLC

TABLE 3-13. Close-Coupled Connection (for Model 1151 Only).

Model	Type
1199CLC	Close-Coupled Connection(1)
Code	**Close Coupled Fitting Material and Size**
11	316 SST, 0.028-in. ID
Code	**Fittings, Transmitter End**
A	Low-Volume Flange Insert, 316 SST
Code	**Length of CLose Couple (between fittings)**
20	2 in.
40	4 in.
Code	**Fitting, Remote End**
A00	½–20 Low-Volume Fitting, 316 SST, *Rosemount* Seals
B00	¼–18 NPT Fitting, 316 SST, Other Manufacturer's Seals
Typical Model Number:	**1199CLC 11 A 20 A00**

(1) Transmitters with close-coupled seals should use mounting brackets. The CLC connection cannot be used with PFW seals. It should not be used with Model 1199SSW, SCW, FFW, or EFW seals; these are all available in integral mount configurations.

FILL

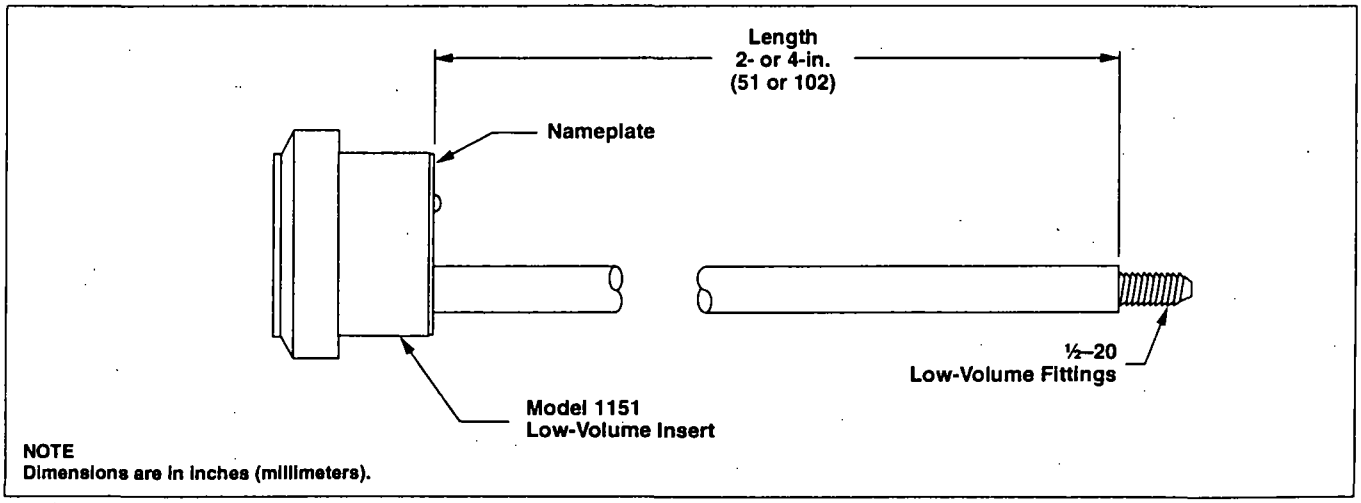

FIGURE 3-13. Model 1199CLC Close-Coupled Connection.

TABLE 3-14. Fill Fluid for Remote Seals.

Model	Remote Fill Fluid(1)		Specific Gravity	Stability Range (at Atmospheric Pressure)	
C10485-0007	*D.C.* 200 Silicone		0.934	–40 to 300 °F	(–40 to 149 °C)
C51734-0001	Inert		1.85	–50 to400 °F	(–45 to 205 °C)
01199-0032-0004	*Syltherm* 800 Silicone(2)		0.934	–50 to 400 °F	(–45 to 205 °C)
01151-0340-0001	Glycerine and Water(3)	Food Grade	1.13	0 to 200 °F	(–17 to 93 °C)
01199-0032-0012	Propylene Glycol and Water(3)	Food Grade	1.02	0 to 200 °F	(–17 to 93 °C)
C51816-0001	*Neobee M-20*	Food Grade	0.90	0 to 400 °F	(–17 to 205 °C)
C09979-0001	*D.C. 704 Silicone*		1.07	60 to 600 °F	(15 to 315 °C)
C53244-0001	*Syltherm XLT*		0.85	–100 to 300 °F	(–73 to 135 °C)
Typical Model Number:	**C10485-0007**				

(1) Reduced temperature limits in vacuum applications.
(2) Can be used up to 600 °F if pressure is 85 psi or greater.
(3) Not for vacuum service.

INDEX

A

Application Considerations 1-6
- Zero Elevation 1-6
- Zero suppression 1-6

Approvals
- Hazardous Locations Certifications 1-10

C

Calibration 1-7
- Calculation 1-7
- Two-Seal Sytem 1-9

Capillary Tubing 3-12
Chemical Tee Seal 3-6
Close-Coupled Connection 3-13
Connection, Close-Coupled 3-13

E

Electrical Connection 1-12
Extended Flanged Seal 3-4

F

Features 1-1
Flanged Remote Seal 3-3

H

Hazardous Locations Certifications 1-10

I

Installation Considerations 1-3
Introduction 1-1

M

Maintenance 1-12
Materials of Construction 1-11

O

One-Seal System 1-7
Operation 1-2
Optimizing Performance 1-6
Ordering
- Information 2-1
- Procedure 2-1

P

Pancake Remote Seal 3-1
Performance Optimization 1-6
Physical Specifications
- Electrical Connection 1-12
- Materials of Construction 1-11
- Weight 1-12

R

Remote Diaphragm Seal
- Capillary Tubing 3-12
- Close-Coupled Connection 3-13
- CTW (Chemical Tee Style) 3-6
- EFW (Extended Flanged Style) 3-4
- PFW (Pancake Style) 3-1
- RFW (Flanged Remote Style) 3-3
- RTW (Threaded Remote Style) 3-5
- Spud Style 3-10
- SSW (Sanitary Tank Spud Style) 3-9
- SSW (Sanitary Tri-Clamp Style) 3-8
- TSW (Sanitary Thin-Wall Level Style 3-11
- UCW (Union Connection Style) 3-7

Remote Diaphragm Seal Ordering Tables 3-1
- FFW 3-2
- FILL 3-13
- SCW 3-8

Remote Seal Selection 1-2
Return of Materials 1-12

S

Sanitary Tank Spud Seal 3-9, 3-10
Sanitary Thin-Wall Level Style 3-11
Sanitary Tri-Clamp Seal 3-8
Seal
- Chemical Tee (CTW) 3-6
- Extended Flanged (EFW) 3-4
- Flanged Remote (RFW) 3-3
- Pancake 3-1
- Sanitary Tank Spud 3-10
- Sanitary Tank Spud (SSW) 3-9
- Sanitary Thin-Wall Level (TSW) 3-11
- Sanitary Tri-Clamp (SCW) 3-8
- Threaded Remote (RTW) 3-5
- Union Connection (UCW) 3-7

Selecting Remote Seals 1-2
Single-Seal System
- Above Seal 1-7

Specifications 1-10
- Functional 1-10
- Performance 1-11
- Physical 1-11

T

Threaded Remote Seal 3-5
Transmitter Above Single-Seal Installation 1-8
Transmitter Below Single-Seal Installation 1-7
Transmitter Installation with Two Seals 1-9
Transmitter Ordering Tables 2-1
- Model 1151 2-2
- Model 1151LT 2-4
- Model 2088 2-11
- Model 3051C 2-6
- Model 3051L 2-8

Tubing, Capillary 3-12
Two Seal System 1-9

U

Union Connection Seal 3-7

W

Weight 1-12

00809-0100-4360
English
Rev. A1

Model 1151 Alphaline® Pressure Transmitters

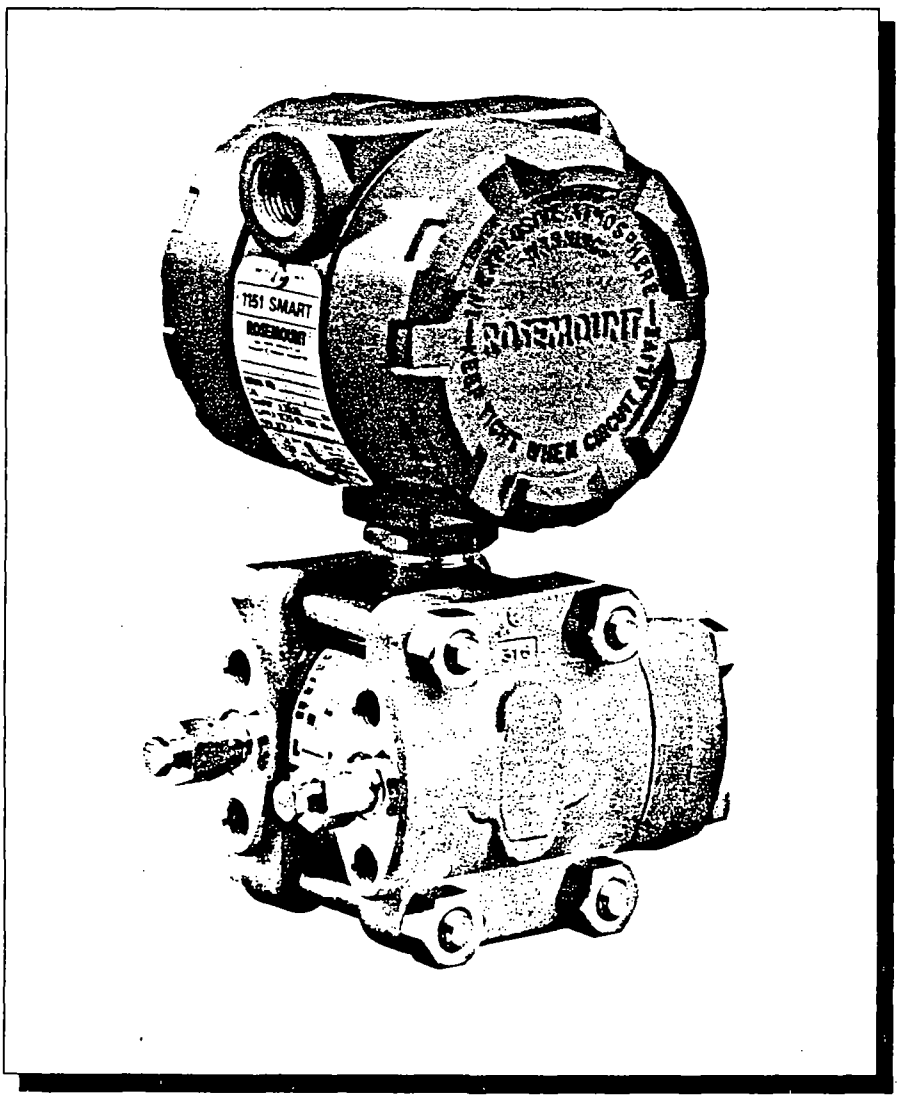

ROSEMOUNT® MEASUREMENT

FISHER-ROSEMOUNT™ Managing The Process Better.™

Product Manual

Model 1151 Alphaline® Pressure Transmitters

NOTICE

Read this manual before working with the product. For personal and system safety, and for optimum product performance, make sure you thoroughly understand the contents before installing, using, or maintaining this product.

Within the United States, Rosemount Inc. has two toll-free assistance numbers.

Customer Central: 1-800-999-9307 *(7:00 a.m. to 7:00 p.m. CST)*
Technical support, quoting, and order-related questions.

North American Response Center: 1-800-654-7768 *(24 hours a day – Includes Canada)*
Equipment service needs.

For equipment service or support needs outside the United States, contact your local Rosemount representative.

⚠CAUTION

The products described in this document are NOT designed for nuclear-qualified applications.

Using non-nuclear qualified products in applications that require nuclear-qualified hardware or products may cause inaccurate readings.

For information on Rosemount nuclear-qualified products, contact your local Rosemount Sales Representative.

SNF-0004

May be protected by one or more of the following U.S. Patent Nos. 3,195,028; 3,271,669; 3,318,153; 3,618,390; 3,646,538; 3,793,885; 3,800,413; 3,854,039; 3,859,594; 3,975,719; 4,339,750; 5,237,285; Re. 30,603. May Depend on Model. Other U.S. and Foreign Patents Issued and Pending.

Rosemount, the Rosemount logotype, Alphaline, and SMART FAMILY are registered trademarks of Rosemount Inc.
HART is a registered trademark of the HART Communication Foundation.
δ-Cell is a trademark of Rosemount Inc.
Hastelloy, Hastelloy C, and Hastelloy C-276 are registered trademarks of Cabot Corp.
Monel is a registered trademark of International Nickel Co.
Teflon is a registered trademark of E.I. du Pont de Nemours & Co.
Alfas is a registered trademark of Asahi Glass Co., Ltd.
Kynar is a trademark of Pennwalt Inc.
Flourolube is a registered trademark of Hooker Chemical Co.
Loctite is a registered trademark of Loctite Corporation.
Cover Photo: 1151-001AB

Rosemount Inc.
Measurement Division
9200 Market Boulevard
Chanhassen, MN 55317 USA
Tel 1-800-999-9307
Telex 4[illegible]012
Fax ([illegible]-7001

CE Fisher-Rosemount satisfies all obligations coming from legislation to harmonize product requirements in the European Union.

ROSEMOUNT® MEASUREMENT

FISHER-ROSEMOUNT™ Managing The Process Better.

00809-0100-4360
© Rosemount Inc., 1996.
Printed in the USA

Table of Contents

SECTION 1
Introduction

Using This Manual 1-1
Model 1151 Alphaline® Pressure Transmitters 1-1
Transmitter overview 1-2

SECTION 2
Installation

General Considerations 2-1
Mechanical Considerations 2-1
Environmental Requirements 2-3
Access Requirements 2-3
Process Flange Orientation 2-3
Housing Rotation 2-3
Terminal Side of Electronics Housing 2-3
Circuit Side of Electronics Housing 2-3
Exterior of Electronics Housing 2-3
Mounting Effects 2-4
Process Connections 2-4
Mounting Brackets 2-5
Mounting Requirements (for Steam, Liquid, Gas) 2-7
Taps 2-7
Drain/Vent Valves 2-7
Impulse Piping 2-8
Electrical Considerations 2-8
Wiring 2-9
Conduit Sealing 2-10
Power Supply 2-10
Grounding 2-11
Signal Wiring 2-11
Transmitter Case 2-11
Grounding Effects 2-12
Hazardous Locations Certifications 2-12
Liquid Level Measurement 2-14
Open Vessels 2-14
Closed Vessels 2-14
Dry Leg Condition 2-14
Wet Leg Condition 2-15
Bubbler System in Open Vessel 2-16

SECTION 3
Calibration

Quick Calibration Procedure (for E, J, and G Electronics) 3-1
Quick Calibration Procedure (For L and M Electronics) 3-1
Data Flow with Calibration Options 3-3
Span Adjustment Range 3-4
Zero Adjustment Range 3-4
Zero and Span Adjustment 3-6
Elevated or Suppressed Zeros 3-7
Linearity Adjustment 3-7
Damping Adjustment 3-8
Static Pressure Span Correction Factor 3-9

SECTION 4 Options

Mounting Brackets 4-1
(OPTION CODES B1–B7 AND B9) 4-1
Analog Meters (4–20 mA only) 4-3
LCD Meters (4–20 mA only) 4-3
LCD Meter Configuration 4-3
LCD Meter Assembly 4-5
LCD Meter Specifications 4-6
Terminal Blocks 4-7
Filter Terminal Block (Option Code R2) 4-8
Transient Protection and Filter Terminal Block (Option Code R1) 4-8
Retrofitable Transient Terminal Block (Option Code R9) 4-8
R9 Terminal Block Installation 4-8
Terminal Block Specifications (for R1, R2, and R9) 4-10

SECTION 5 Maintenance and Troubleshooting

Hardware Diagnostics 5-1
Transmitter Disassembly 5-4
Process Sensor Body Removal 5-5
Removing the Sensor from the Electrical Housing 5-6
Sensor Module Checkout 5-7
Reassembly Procedure 5-8
Preliminary Precaution 5-8
Connecting the Electrical Housing to the Sensor 5-8
Backup Ring and O-ring Installation 5-8
Optional Plug-in Meters 5-10
Return of Material 5-10

SECTION 6 Specifications and Reference Data

Functional Specifications 6-1
Performance Specifications 6-6
Physical Specifications (Standard Configuration) 6-8

APPENDIX Approval Drawings A-1

GLOSSARY G-1

INDEX I-1

Section 1 Introduction

USING THIS MANUAL

This manual is designed to assist in installing, operating, and maintaining the Rosemount Model 1151 Analog Pressure Transmitter Family.

Section 2 Installation
provides mechanical and electrical installation instructions.

Section 3 Calibration
explains technique for calibration of the device.

Section 4 Options
explains the options available for the Model 1151, including mounting brackets, LCD meters, custom configuration, transient protection, and filter terminal blocks.

Section 5 Maintenance and Troubleshooting
describes trim procedures and offers troubleshooting instructions for dealing with potential mechanical or electrical difficulties.

Section 6 Specifications and Reference Data
lists functional, performance, and physical specifications data as well as ordering information for the transmitter.

Appendix A Approval Drawings
contains approval drawings for Canadian Standards Association (CSA) and Factory Mutual (FM) intrinsic safety drawings.

Glossary
provides brief definitions of the terms used in this manual and tells where to find more information.

Index
contains a comprehensive, standard index.

MODEL 1151 ALPHALINE® PRESSURE TRANSMITTERS

This manual describes the following Model 1151 Alphaline® Pressure Transmitters.

- **Model 1151DP**— Differential Pressure Transmitter measures differential pressure from 6 inH_2O to 1,000 psi (1.493 to 6895 kPa).
- **Model 1151HP**— Differential Pressure Transmitter for High Line Pressures measures high line pressures from 25 inH_2O to 300 psi (6.22 to 2668 kPa).
- **Model 1151GP**— Gage Pressure Transmitter measures gage pressure from 6 inH_2O to 6,000 psi (1.493 to 41369 kPa).
- **Model 1151AP**— Absolute Pressure Transmitter measures absolute pressure from 25 inH_2O to 1,000 psi (6.22 to 6895 kPa).

TRANSMITTER OVERVIEW

The Rosemount Model 1151 Alphaline® series of pressure transmitters has set an industry standard as the largest-selling transmitter in the world. It brings true precision to the measurement of flow, level, gage and absolute pressures, vacuum, and specific gravity.

With proven performance, quality, and reliability, the Model 1151 provides accurate measurement using the variable capacitance principle. It is virtually unaffected by changes in temperature, static pressure, vibration, and power supply voltage.

Installation, calibration, and commissioning are simplified by the transmitter's compact design, integral junction box, and local span and zero adjustments. Its modular design and high degree of interchangeability result in a minimal investment for spare parts.

Section 2 Installation

This section covers areas to consider when installing the Model 1151 Analog Transmitter:

- General Considerations
- Mechanical Considerations
- Environmental Requirements
- Electrical Considerations
- Liquid Level Measurement

GENERAL CONSIDERATIONS

The accuracy of a flow, pressure, or level measurement depends on proper installation of the transmitter and impulse piping. The piping between the process and transmitter must accurately transmit process pressure to the transmitter. Mount the transmitter close to the process and use a minimum of piping to achieve best accuracy. Keep in mind, however, the need for easy access, safety of personnel, practical field calibration, and a suitable transmitter environment. In general, install the transmitter so as to minimize vibration, shock, and temperature fluctuations.

Installations in food, beverage, and pharmaceutical processes may require sanitary seals and fittings. Regulations may dictate special installation requirements needed to maintain sanitation and cleanability considerations. See Product Data Sheet 00813-0100-4016 for more information about sanitary pressure instruments from Rosemount Inc.

MECHANICAL CONSIDERATIONS

Rosemount Model 1151DP, GP, HP, and AP transmitters may be mounted in several ways. They may be panel-mounted, wall-mounted, or attached to a 2-inch pipe through an optional mounting bracket. Figure 2-1 shows the transmitter dimensions. The following paragraphs discuss factors necessary for a successful transmitter installation.

FIGURE 2-1. Dimensional Drawing for Model 1151 Transmitter.

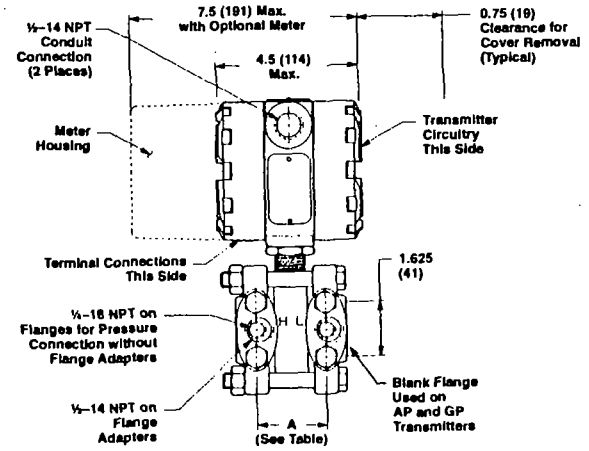

Range	Flange Distance "A" Center to Center	
	inches	mm
3, 4, 5	2.125	54
6, 7	2.188	56
8	2.250	57
9	2.281	58
0	2.328	59

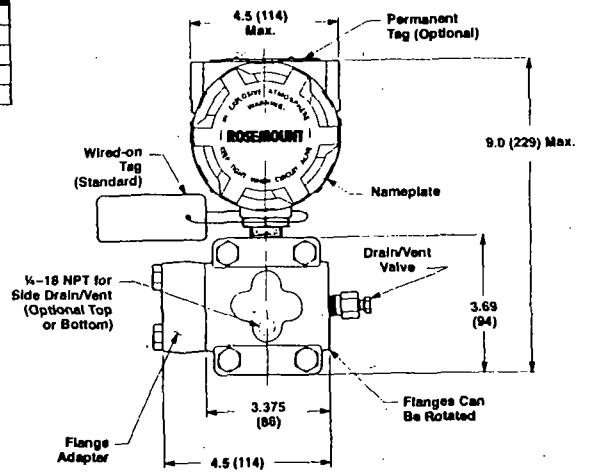

NOTE:
Dimensions are in inches (millimeters).

1151-1151A.B05A

ENVIRONMENTAL REQUIREMENTS

Mount the transmitter to minimize ambient temperature changes. The transmitter electronics temperature operating limits are –40 to 200 °F (–40 to 85 °C) for "E" output options, –20 to 150 °F (–29 to 66 °C) for "J" output options, and –20 to 200 °F (–29 to 93 °C) for G, L, and M output options. **Section 5 Maintenance and Troubleshooting** lists the sensing element operating limits. Mount the transmitter to avoid vibration and mechanical shock, and to avoid external contact with corrosive materials.

Access Requirements

When choosing an installation location and position, take into account the need for access to the transmitter.

Process Flange Orientation

Orient the process flanges to enable process connections to be made. For safety reasons, orient the drain/vent valves so that process fluid is directed down and away from technicians when the valves are used. This can be accomplished by pointing the hole in the outside valve body downward and away. In addition, consider the need for a testing or calibration input.

⚠CAUTION

Do not rotate the transmitter housing more than 90 degrees without disconnecting the header board. Exceeding 90 degrees rotation will damage the internal sensor module wiring. Refer to Removing the Sensor from the Electrical Housing on page 5-6 for further information.

Housing Rotation

The electronics housing may be rotated up to 90 degrees to improve field access to the two housing compartments. To rotate the housing less than 90 degrees, loosen the housing lock nut and turn the housing not more than 90 degrees from the orientation shown in Figure 2-1. To rotate the housing more than 90 degrees, follow the transmitter disassembly procedures in **Section 5 Maintenance and Troubleshooting**.

Terminal Side of Electronics Housing

Make wiring connections through the conduit openings on the top side of the housing. The terminal side of the housing is marked on the nameplate located on the side of the transmitter. Mount the transmitter so that the terminal side is accessible. A ¾-inch clearance is required for cover removal with no meter. A 3-inch clearance is required for cover removal if a meter is installed. If practical, provide approximately 6 inches clearance so that a meter may be installed later.

Circuit Side of Electronics Housing

The circuit compartment should not routinely need to be opened when the unit is in service; however, provide 6 inches clearance if possible to allow access for on-site maintenance. The circuit side of the housing is marked on the nameplate located on the side of the transmitter.

Exterior of Electronics Housing

The analog Model 1151 uses local span and zero screws, which are located under the nameplate on the side of the transmitter. Please allow 6 inches clearance if possible to allow access for on-site maintenance.

Mounting Effects

The analog Model 1151 weighs 12 lb (5.4 kg) for AP, DP, GP, and HP transmitters, excluding options. This weight must be securely supported; see Figure 2-2 on page 2-6 for mounting bracket information. The transmitter is calibrated in an upright position at the factory. If this orientation is changed during mounting, the zero point will shift by an amount equivalent to the liquid head caused by the mounting position. **Zero and Span Adjustment** on page 3-6 describes how to correct this shift.

⚠WARNING

Process leaks can cause death or serious injury. Only use bolts supplied with the transmitter or sold by Rosemount Inc. as a spare part. Using unauthorized bolts may reduce pressure retaining capabilities and render the instrument dangerous.

⚠CAUTION

Do not plug the low side with a solid plug. Plugging the low side will cause an output shift.

Process Connections

Model 1151AP, DP, GP, and HP process connections on the transmitter flanges are ¼–18 NPT. Flange adapter unions with ½–14 NPT connections are supplied as standard. These are Class 2 threads; use plant-approved lubricant or sealant when making the process connections. The flange adapters allow users to disconnect from the process by removing the flange adapter bolts. Figure 2-1 on page 2-2 shows the distance between pressure connections. This distance may be varied ±1/8 inch (3.2 mm) by rotating one or both of the flange adapters.

To ensure a tight seal on the flange adapters or three-valve manifold, first finger-tighten both bolts, then wrench-tighten the first bolt to approximately 29 ft-lbs (34 Nm). Wrench-tighten the second bolt to approximately 29 ft-lbs (34 Nm).

⚠WARNING

Process leaks can cause death or serious injury. Install and tighten all four flange bolts before applying pressure, or process leakage may result. When properly installed, the flange bolts will protrude through the top of the module housing. Attempting to remove the flange bolts while the transmitter is in service may cause process fluid leaks.

⚠WARNING

Failure to install flange adapter O-rings can cause process leaks, which can result in death or serious injury.

There are two styles of Rosemount flange adapters, each requiring a unique O-ring, as shown below. Each flange adapter is distinguished by its unique groove.

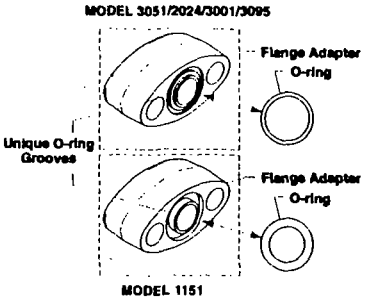

Use only the O-ring designed to seal with the corresponding flange adapter.

Refer to the Spare Parts List on page 6-13 for the part numbers of the flange adapters and O-rings designed for the Model 1151 Pressure Transmitter.

NOTE
If Teflon O-rings are used, they should be replaced if the flange adapter is removed.

The low-side process flange has a ¼–18 NPT connection. A flange adapter union is supplied for ½–14 NPT process connections. The flange adapter allows the transmitter to be easily disconnected from the process by removing the flange adapter bolts. On open vessels the low-side process flange is open to atmosphere and should be mounted with the threaded hole pointed down. On closed vessels this connection is used for the dry or wet leg.

Mounting Brackets

An optional mounting bracket permits mounting the transmitter to a wall, a panel, or a 2-inch horizontal or vertical pipe. Figure 2-2 illustrates some typical configurations using these mounting brackets.

FIGURE 2-2. Mounting Bracket Options.

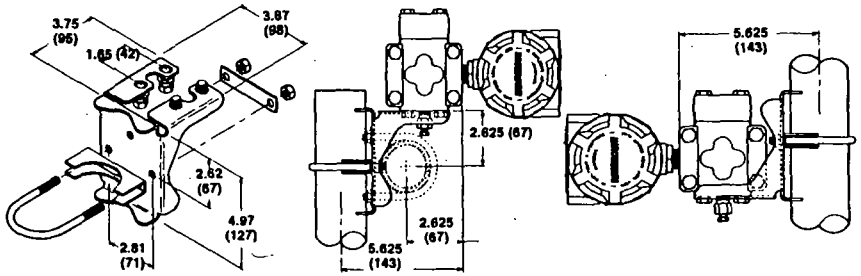

PIPE MOUNTING BRACKET OPTION CODES B1, B4, AND B7

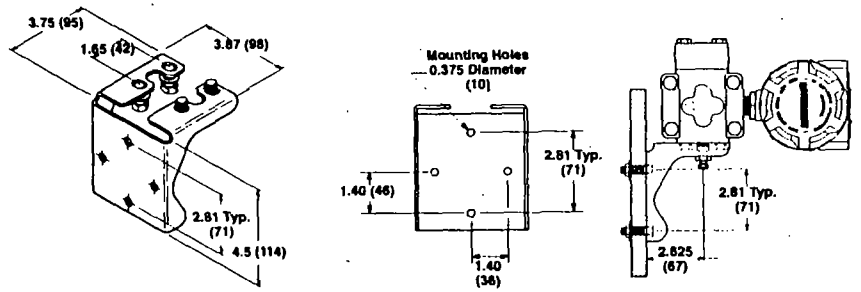

PANEL MOUNTING BRACKET OPTION CODES B2 AND B5

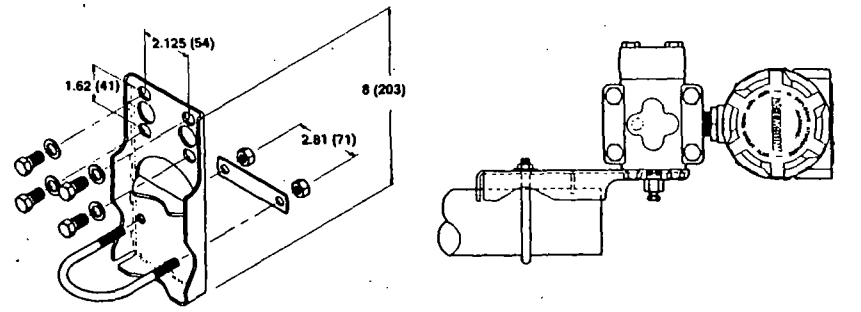

FLAT MOUNTING BRACKET OPTION CODES B3, B6, AND B9

NOTE
Dimensions are in inches (millimeters).

Mounting Requirements (for Steam, Liquid, Gas)

The following information applies to steam, liquid, and gas installations.

Taps

Different measurement conditions call for different piping configurations. For liquid flow measurement, place taps to the side of the line to prevent sediment deposits, and mount the transmitter beside or below these taps so gases can vent into the process line. For gas flow measurement, place taps in the top or side of the line and mount the transmitter beside or above the taps so liquid will drain into the process line. For steam flow measurement, place taps to the side of the line with the transmitter mounted below them to ensure that the impulse piping stays filled with condensate. See Figure 2-3 for a diagram of these arrangements.

FIGURE 2-3. Steam, Liquid, and Gas Service Installation Diagrams.

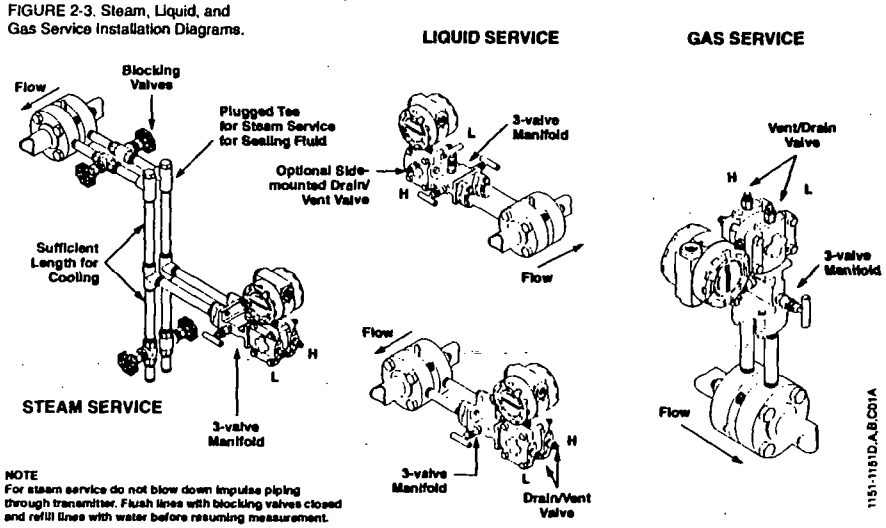

NOTE
For steam service do not blow down impulse piping through transmitter. Flush lines with blocking valves closed and refill lines with water before resuming measurement.

Drain/Vent Valves

For transmitters with side drain/vent valves, place taps to the side of the line. For liquid service, mount the side drain/vent valve upward to allow the gases to vent. For gas service, mount the drain/vent valve down to allow any accumulated liquid to drain. To change the drain/vent valve orientation from top to bottom, rotate the process flange 180 degrees.

⚠CAUTION

Steam or other elevated temperature processes can cause damage to the sensor. Do not allow the temperature inside the process flanges to exceed the transmitter limit of 220 °F (104 °C).

In steam service, lines should be filled with water to prevent contact of the live steam with the transmitter.

Impulse Piping

The piping between the process and the transmitter must accurately transfer the pressure in order to obtain accurate measurements. In this pressure transfer, there are five possible sources of error: leaks, friction loss (particularly if purging is used), trapped gas in a liquid line, liquid in a gas line, and temperature-induced or other density variation between the legs.

The best location for the transmitter in relation to the process pipe depends on the process itself. Consider the following general guidelines in determining transmitter location and placement of impulse piping:

- Keep impulse piping as short as possible.
- Slope the impulse piping at least 1 inch per foot (8 centimeters per meter) upward from the transmitter toward the process connection for liquid.
- Slope the impulse piping at least 1 inch per foot (8 centimeters per meter) downward from the transmitter toward the process connection for gas.
- Avoid high points in liquid lines and low points in gas lines.
- Make sure both impulse legs are the same temperature.
- Use impulse piping large enough to avoid friction effects and prevent blockage.
- Vent all gas from liquid piping legs.
- When using a sealing fluid, fill both piping legs to the same level.
- When purging is necessary, make the purge connection close to the process taps and purge through equal lengths of the same size pipe. Avoid purging through the transmitter.
- Keep corrosive or hot process material out of direct contact with the sensor module and flanges.
- Prevent sediment deposits in the impulse piping.
- Keep the liquid head balanced on both legs of the impulse piping.

ELECTRICAL CONSIDERATIONS

Before making any electrical connections to the Model 1151 analog, consider the following standards and be sure to have proper power supply, conduit, and other accessories. Make sure all electrical installation is in accordance with national and local code requirements, such as the NEC (NFPA 70).

⚠WARNING

Explosions can cause death or serious injury. Do not remove the instrument cover in explosive atmospheres when the circuit is alive.

⚠CAUTION

Do not connect the power signal wiring to the test terminals. Voltage may burn out the reverse-polarity protection diode in the test connection. If the test diode is destroyed, then the transmitter can still be operated without local indication by jumping the test terminals.

⚠CAUTION

High voltage (greater than 55 Volts for "E" electronics, 85 Volts for "G" electronics, 12 Volts for "L" electronics, and 14 Volts for "M" electronics.) can cause damage to the transmitter. Do not apply high voltage to the test terminals.

Wiring

The signal terminals and test terminals are located in a compartment of the electronics housing separate from the transmitter electronics. The nameplate on the side of the transmitter indicates the locations of the terminal and electronics compartments. The upper pair of terminals are the signal terminals and the lower pair are the test terminals. The test terminals have the same 4–20 mA output as the signal terminals and are only for use with the optional integral meter or for testing.

To make connections, remove the cover on the side marked "Terminal" on the nameplate. All power to the transmitter is supplied over the signal wiring. Connect the lead that originates at the positive side of the power supply to the terminal marked "+" and the lead that originates at the negative side of the power supply to the terminal marked "–" as shown in Figure 2-4. No additional wiring is required.

Shielded cable should be used for best results in electrically noisy environments.

FIGURE 2-4. Terminal Connections.

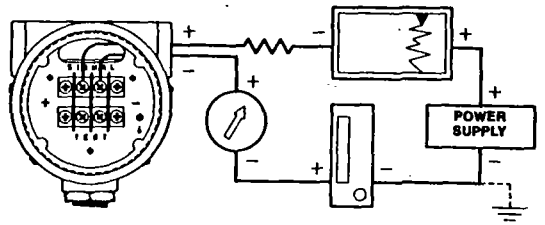

FIGURE 2-5. Wiring Connections for Low Power Output Codes L and M.

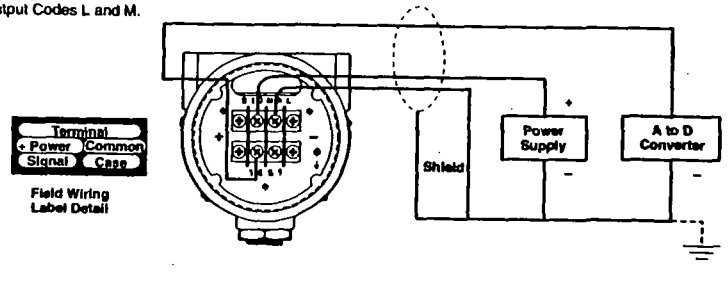

NOTE
An alternate location to connect an ammeter is on the set of terminals labelled "TEST." Connect the positive lead of the ammeter to the positive test terminal, and the negative lead of the ammeter to the negative test terminal.

NOTE
When conduit lines are used, signal wiring need not be shielded, but twisted pairs should be used for best results. Wiring should be 12-24 AWG.

Conduit Sealing

The 1151 has been rated as "Factory Sealed" by Factory Mutual (FM) and Canadian Standards Association (CSA). It is therefore not necessary to install conduit seals near the transmitter enclosure.

Do not run signal wiring in conduit or open trays with power wiring, or near heavy electrical equipment. Signal wiring may be grounded at any one point on the signal loop, or it may be left ungrounded. The negative terminal of the power supply is a recommended grounding point. The transmitter case must be grounded through the process or conduit connections.

Power Supply

The dc power supply should provide power with less than 2 percent ripple. The total resistance load is the sum of the resistance of the signal leads and the load resistance of the controller, indicator, and related pieces. Note that the resistance of intrinsic safety barriers, if used, must be included.

To power the loop, connect the leads at the set of terminal screws labeled "Signal." Figure 2-6 illustrates power supply load limitations for the transmitter.

FIGURE 2-6. Power Supply Load Limitations.

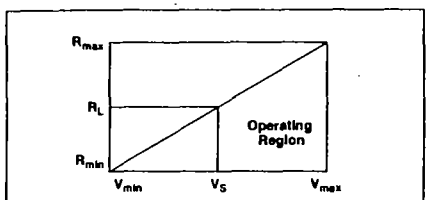

Code	V_{min}	V_{max}	R_{min}	R_{max}	R_L at Supply Voltage (V_S)
E, J	12	45	0	1650	$R_L = 50 (V_S - 12)$
G	30	85	0	1100	$R_L = 20 (V_S - 30)$
L	5	12	Low Power Minimum Load Impedance: 100 kΩ		
M	8	14			

NOTE
For CSA Approvals (codes E and J), V_{max} = 42.4 V dc.

FIGURE 2-7. Conduit Installation Diagrams.

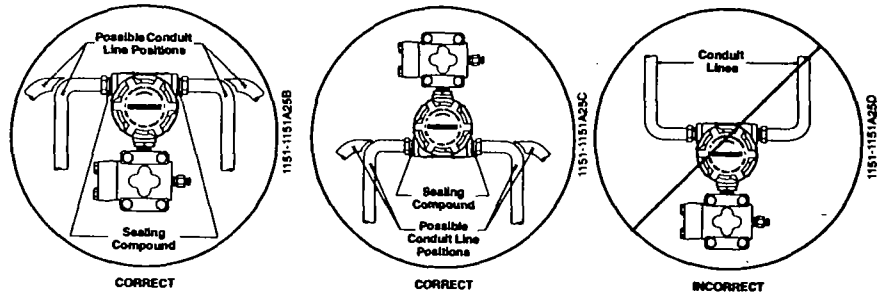

Unused conduit connections on the transmitter housing should be plugged and sealed to avoid moisture accumulation in the terminal side of the housing. The recommended connections of conduit are shown in Figure 2-7.

⚠WARNING

All explosion proof, flameproof, and dust-ignition proof installations require insertion of conduit plugs in all unused openings with a minimum of 40 ft-lbs (54 N-m) of torque. This will maintain five full threads of engagement.

⚠CAUTION

If all connections are not sealed, excess moisture accumulation can damage the transmitter. Make sure to mount the transmitter with the electrical housing positioned downward for drainage. To avoid moisture accumulation in the housing, install wiring with a drip loop, and ensure the bottom of the drip loop is mounted lower than the conduit connections or the transmitter housing.

Grounding

Use the following techniques to properly ground the transmitter signal wiring and case:

Signal Wiring

Do not run signal wiring in conduit or open trays with power wiring, or near heavy electrical equipment. Signal wiring may be grounded at any one point on the signal loop, or it may be left ungrounded. The negative terminal of the power supply is a recommended grounding point.

Transmitter Case

The transmitter case must be grounded in accordance with national and local electrical codes. The most effective transmitter case grounding method is a direct internal connection to earth ground with minimal impedance.

Internal Ground Connection: Inside the FIELD TERMINALS side of the electronics housing is the Internal Ground Connection screw. This screw is identified by a ground symbol: ⏚

NOTE
Grounding the transmitter case via threaded conduit connection may not provide sufficient ground continuity.

NOTE
The transient protection terminal block (See Figure 4-4 on page 4-7) does not provide transient protection unless the transmitter case is properly grounded. Use the preceding guidelines to ground the transmitter case.

Do not run the transient protection ground wire with signal wiring as the ground wire may carry excessive current if a lightning strike occurs.

Grounding Effects

The capacitance sensing module requires alternating current to generate a capacitance signal. This alternating current is developed in an oscillator circuit with a frequency of approximately 32 kHz. This signal is capacitor-coupled to transmitter-case ground through the sensing module. Because of this coupling, a voltage may be imposed across the load, depending on the choice of grounding. See Figure 2-8.

This impressed voltage, which is seen as high frequency noise, will have no effect on most instruments. Computers with short sampling times will detect a significant noise signal, which should be filtered out by using a large capacitor (1 μF) or by using a 32 kHz LC filter across the load. Computers are negligibly affected by this noise and do not need filtering.

Hazardous Locations Certifications

The Model 1151 was designed with an explosion-proof housing and circuitry suitable for intrinsically safe and non-incendive operation. Factory Mutual explosion-proof certification is standard for the Model 1151 Transmitter. Individual transmitters are clearly marked with a tag indicating the approvals they carry. Transmitters must be installed in accordance with all applicable codes and standards to maintain these certified ratings. Refer to **Hazardous Locations Certifications** on page 6-2 for information on the approvals associated with the analog Model 1151.

FIGURE 2-8. Typical Effects of Grounding on Accuracy for Fast Sample Computers (4-20 mA loops only).

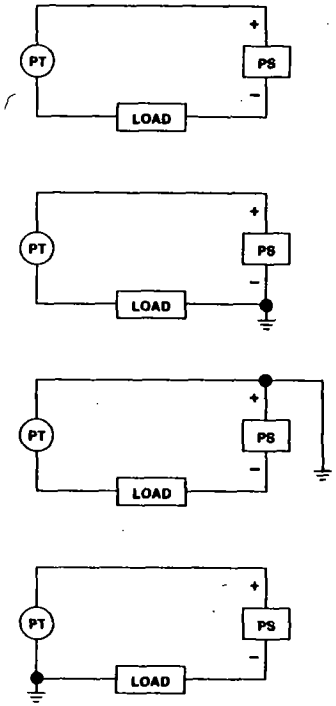

NOTE
Typical effects caused by the impressed voltage on a computer with a sampling time of 100 microseconds using a 2 to 10 volt signal.

LIQUID LEVEL MEASUREMENT

Differential pressure transmitters used for liquid level applications measure hydrostatic pressure head. Liquid level and specific gravity of a liquid are factors in determining pressure head. This pressure is equal to the liquid height above the tap multiplied by the specific gravity of the liquid. Pressure head is independent of volume or vessel shape.

Open Vessels

A pressure transmitter mounted near a tank bottom measures the pressure of the liquid above.

Make a connection to the high pressure side of the transmitter, and vent the low pressure side to the atmosphere. Pressure head equals the liquid's specific gravity multiplied by the liquid height above the tap.

Zero range suppression is required if the transmitter lies below the zero point of the desired level range. Figure 2-9 shows a liquid level measurement example.

Closed Vessels

Pressure above a liquid affects the pressure measured at the bottom of a closed vessel. The liquid specific gravity multiplied by the liquid height plus the vessel pressure equals the pressure at the bottom of the vessel.

To measure true level, the vessel pressure must be subtracted from the vessel bottom pressure. To do this, make a pressure tap at the top of the vessel and connect this to the low side of the transmitter. Vessel pressure is then equally applied to both the high and low sides of the transmitter. The resulting differential pressure is proportional to liquid height multiplied by the liquid specific gravity.

Dry Leg Condition

Low-side transmitter piping will remain empty if gas above the liquid does not condense. This is a dry leg condition. Range determination calculations are the same as those described for bottom-mounted transmitters in open vessels, as shown in Figure 2-9.

FIGURE 2-9. Liquid Level Measurement Example.

Let X equal the vertical distance between the minimum and maximum measurable levels (500 in.).
Let Y equal the vertical distance between the transmitter datum line and the minimum measurable level (100 in.).
Let SG equal the specific gravity of the fluid (0.9).
Let h equal the maximum head pressure to be measured in inches of water.
Let e equal head pressure produced by Y expressed in inches of water.
Let Range equal e to e + h
Then h = (X)(SG)
= 500 x 0.9
= 450 inH_2O
e = (Y)(SG)
= 100 x 0.9
= 90 inH_2O
Range = 90 to 540 inH_2O

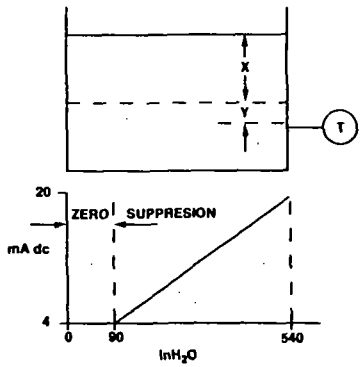

2024-0171A 0172A

Wet Leg Condition

Condensation of the gas above the liquid slowly causes the low side of the transmitter piping to fill with liquid. The pipe is purposely filled with a convenient reference fluid to eliminate this potential error. This is a wet leg condition.

The reference fluid will exert a head pressure on the low side of the transmitter. Zero elevation of the range must then be made. See Figure 2-10.

FIGURE 2-10. Wet Leg Example.

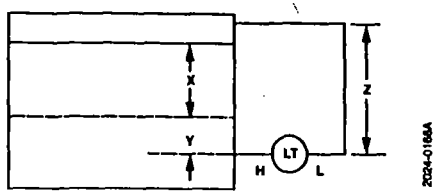

2024-0166A

Let X equal the vertical distance between the minimum and maximum measurable levels (500 in.).
Let Y equal the vertical distance between the transmitter datum line and the minimum measurable level (50 in.).
Let z equal the vertical distance between the top of the liquid in the wet leg and the transmitter datum line (600 in.).
Let SG_1 equal the specific gravity of the fluid (1.0).
Let SG_2 equal the specific gravity of the fluid in the wet leg (1.1).
Let h equal the maximum head pressure to be measured in inches of water.
Let e equal the head pressure produced by Y expressed in inches of water.
Let s equal head pressure produced by z expressed in inches of water.
Let Range equal e – s to h + e – s.
Then h = (X)(SG_1)
= 500 x 1.0
= 500 in H_2O
e = (Y)(SG_1)
= 50 x 1.0
= 50 inH_2O
s = (z)(SG_2)
= 600 x 1.1
= 660 inH_2O
Range = e – s to h + e – s.
= 50 – 660 to 500 + 50 – 660
= –610 to –110 inH_2O

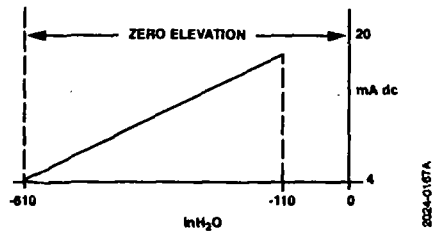

2024-0167A

Bubbler System in Open Vessel

A bubbler system that has a top-mounted pressure transmitter can be used in open vessels. This system consists of an air supply, pressure regulator, constant flow meter, pressure transmitter, and a tube that extends down into the vessel.

Bubble air through the tube at a constant flow rate. The pressure required to maintain flow equals the liquid's specific gravity multiplied by the vertical height of the liquid above the tube opening. Figure 2-11 shows a bubbler liquid level measurement example.

FIGURE 2-11. Bubbler Liquid Level Measurement Example.

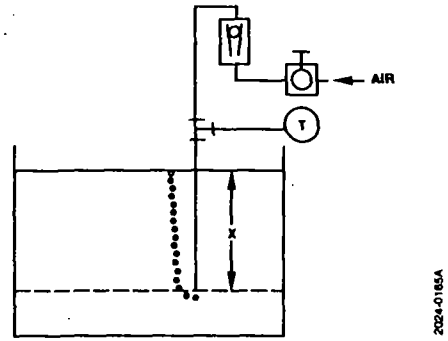

Let X equal the vertical distance between the minimum and maximum measurable levels (100 in.).
Let SG equal the specific gravity of the fluid (1.1).
Let h equal the maximum head pressure to be measured in inches of water.
Let Range equal zero to h.
Then h = (X)(SG)
= 100 x 1.1
= 110 inH_2O
Range = 0 to 110 inH_2O

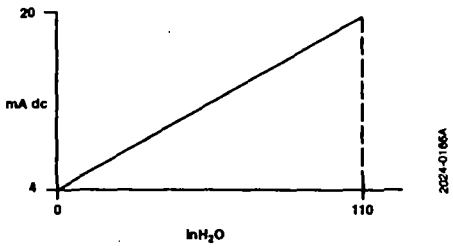

Section 3 Calibration

Calibration of the Rosemount Model 1151 Pressure Transmitter is simplified by its compact and explosion-proof design, external span and zero adjustments, separate compartments for electronics and wiring, and weatherproof construction. Descriptions of span, linearity, zero adjustments, and damping follow.

⚠WARNING

Explosions can cause death or serious injury. Both transmitter covers must be fully engaged to meet explosion-proof requirements.

⚠CAUTION

When replacing housing covers, tighten the covers enough to make contact with the O-ring seals. If the covers are not tightened enough, moisture can enter the housing and cause transmitter failure.

QUICK CALIBRATION PROCEDURE (FOR E, G, AND J ELECTRONICS)

The following Quick Calibration Procedures are for those users who are already familiar with the analog Model 1151.

NOTE
The zero and span adjustments are interactive. For applications requiring large elevated or suppressed values, refer to **Elevated or Suppressed Zeros** on page 3-7.

1. Apply 4 mA-point pressure and turn zero screw to output 4 mA.
2. Apply 20 mA-point pressure.
3. Subtract actual output from desired output.
4. Divide difference by 3.
5. Turn span screw above or below desired output by value in Step 4.
6. Repeat Steps 1 through 5 until calibrated.

QUICK CALIBRATION PROCEDURE (FOR L AND M ELECTRONICS)

1. Apply 1 V dc-point pressure for M electronics (0.8 V dc for L electronics) and turn zero screw to output 1 V dc (0.8 V dc for L electronics).
2. Apply 5 V dc-point pressure (M electronics) or 3.2 V dc (L electronics).
3. Subtract actual output from desired output.
4. Divide difference by 3.
5. Turn span screw above or below desired output by value in Step 4.
6. Repeat Steps 1 through 5 until calibrated.

Example for a Model 1151DP Range 4: For a desired calibration of 0 to 100 inH_2O, use the following procedure:

1. Adjust the zero. With zero input applied to the transmitter, turn the zero adjustment screw until the transmitter reads 4 mA.
2. Adjust the span. Apply 100 inH_2O to the transmitter high side connection. Turn the span adjustment screw until the transmitter output reads approximately 20 mA.
3. Release the input pressure and readjust the zero output to read 4 mA ±0.032 mA.
4. Re-apply 100 inH_2O to the transmitter. If the output reading is greater than 20 mA, divide the difference by 3, and subtract the result from 20 mA. Adjust the 100% output to this value.

If the output reading is less than 20 mA, divide the difference by 3 and add the result to 20 mA. Adjust the 100% output to this value.

Example: The full scale transmitter output is 20.100 mA. Dividing 0.100 by 3.0 gives the product 0.033. Subtracting the product 0.033 from 20.00 mA gives the difference 19.967 mA. Adjust the 100% output to this value.

5. Release input pressure and readjust the zero.
6. Apply 100% input and repeat Steps 3 through 5 if the full scale output is not 20 ±0.032 mA.

NOTE
Under operating conditions that subject the transmitter to temperature extremes or significant vibration, mechanical backlash may occur in the zero and span adjustment screws. To improve the stability of zero and span settings in these circumstances, back off the adjustment screws slightly after final adjustment to break contact between the potentiometer blades and the adjustment screw slot surfaces.

DATA FLOW WITH CALIBRATION OPTIONS

Figure 3-1 illustrates the Model 1151 Transmitter data flow with calibration tasks.

FIGURE 3-1. Model 1151 Transmitter Data Flow with Calibration Options.

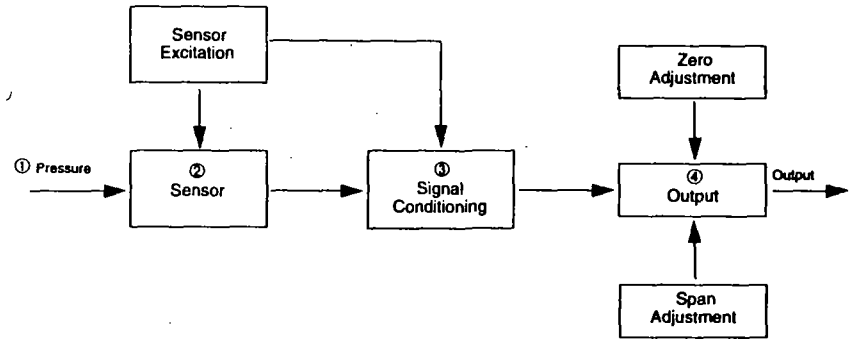

This data flow can be summarized in four major steps:

1. Pressure is applied to the sensor.
2. A change in pressure is measured by a change in the sensor output.
3. The sensor signal is conditioned for various parameters.
4. The conditioned signal is converted to an appropriate analog output.

SPAN ADJUSTMENT RANGE

The span on a Model 1151 with E, G, and J output options is continuously adjustable to allow calibration anywhere between maximum span and one-sixth of maximum span. For example, the span on a Range 4 transmitter can be adjusted between 25 and 150 inH_2O (6.2 and 37.2 kPa).

ZERO ADJUSTMENT RANGE

The zero on a Model 1151 with the E or G output options can be adjusted for up to 500% suppression or 600% elevation. See Figure 3-2.

FIGURE 3-2. Zero Adjustment Range.

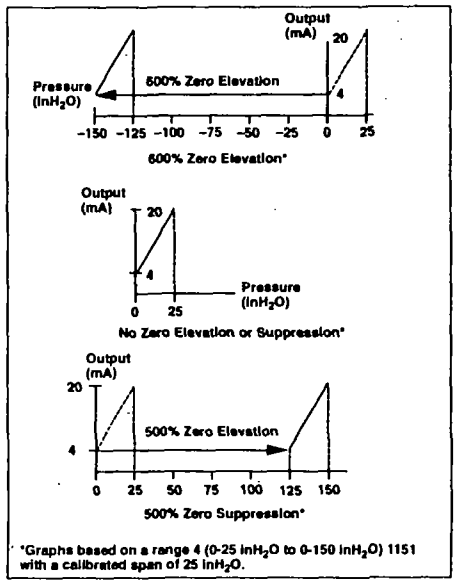

The zero may be elevated or suppressed to these extremes with the limitation that no pressure within the calibrated range exceeds the full-range pressure limit. For example, a Range 4 transmitter cannot be calibrated for 100 to 200 inH_2O (24.8 to 49.7 kPa) (only 100% zero suppression) because 200 inH_2O exceeds the 150 inH_2O full-range pressure limit of a Range 4.

To make large elevation or suppression adjustments, it is necessary to move the jumper on the component side of the amplifier board. Figure 3-3 on page 3-5 shows elevation and suppression jumper settings. The jumper has three positions. The middle position allows normal levels of elevation or suppression. For larger adjustments, move the jumper to the ELEVATE ZERO (EZ) or SUPPRESS ZERO (SZ) as marked.

NOTE
Always make sure that the jumper is fully seated on its pins. If the jumper has not been placed in any of the three positions, the amplifier board will provide normal levels of elevation or suppression. A slide switch replaces the jumper pin on some versions of the amplifier board.

FIGURE 3-3. Elevation and Suppression Jumper Settings.

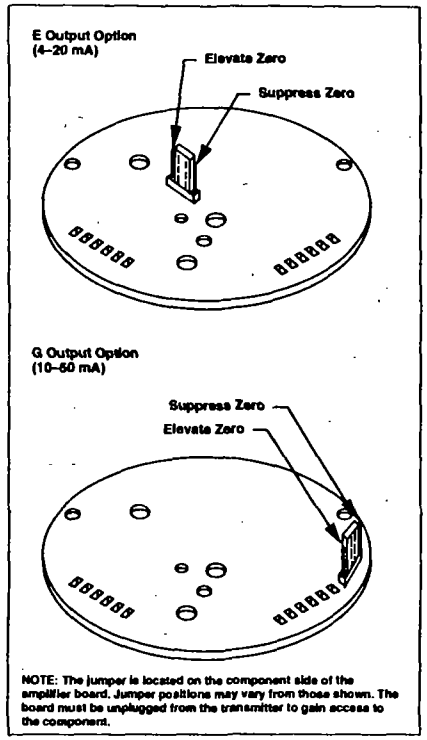

ZERO AND SPAN ADJUSTMENT

The zero and span adjustment screws are accessible externally behind the nameplate on the terminal side of the electronics housing. See Figure 3-4. The output of the transmitter increases with clockwise rotation of the adjustment screws. The zero adjustment screw and ELEVATE ZERO/SUPPRESS ZERO jumper do not affect the span. Span adjustment, however, does affect zero. This effect is minimized with zero-based spans. Therefore, when calibrations having elevated or suppressed zeros are made, it is easier to make a zero-based calibration and achieve the required elevation or suppression by adjusting the zero adjustment screw (and ELEVATE ZERO/SUPPRESS ZERO jumper as required).

A degree of mechanical backlash is present in the zero and span adjustments, so there will be a dead band when the direction of adjustment is changed. Because of the backlash, the simplest procedure is to purposely overshoot a larger amount before reversing the direction of the adjustment.

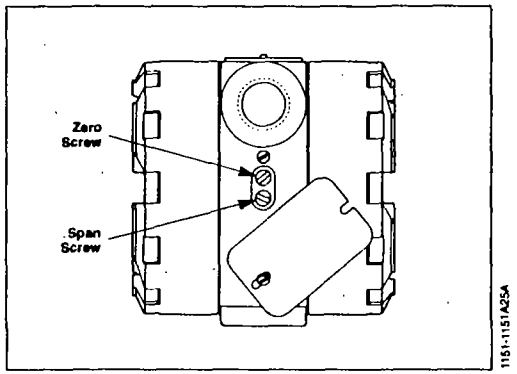

FIGURE 3-4. Zero and Span Adjustment Screws.

ELEVATED OR SUPPRESSED ZEROS

Non-zero-based calibrations are termed as having "elevated" or "suppressed" zeros. Calibrations that have a lower calibrated value below zero are termed elevated. Compound ranges are included in this category. Calibrations that have a lower calibrated value above zero are termed suppressed.

The easiest way to calibrate transmitters with elevated or suppressed zeros is to perform a zero-based calibration and then elevate or suppress the zero by adjusting the zero adjustment screw.

Model 1151DP Range 4 Suppression Example: For a desired calibration of 20 to 120 inH_2O (4.9 to 29.8 kPa), proceed as follows:

1. Calibrate the transmitter to 0 to 100 inH_2O (0 to 24.8 kPa) as described in the zero and span adjustment information.
2. Apply 20 inH_2O (4.9 kPa) to the high side process connection, and adjust the zero until the transmitter output reads 4 mA. **Do not use the span adjustment.**

Model 1151DP Range 4 Elevation Example: For a calibration of −120 to −20 inH_2O (−29.8 to −4.9 kPa), proceed as follows:

1. Calibrate the transmitter to 0 to 100 inH_2O (0 to 24.8 kPa) as described in the zero and span adjustment information.
2. Apply 120 inH_2O (29.8 kPa) to the low side process connection, and adjust the zero until the transmitter output reads 4 mA. **Do not use the span adjustment.**

NOTE
For large amounts of elevation or suppression, it may be necessary to reposition the ELEVATE/SUPPRESS ZERO jumper. To do this, remove the amplifier board, and move the jumper to the ELEVATE or SUPPRESS position as required. See Figure 3-3 on page 3-5.

LINEARITY ADJUSTMENT

In addition to the span and zero adjustments, a linearity adjustment screw (marked LIN) is located on the solder side of the amplifier board. See Figure 3-5. This is a factory calibration adjusted for optimum performance over the calibrated range of the instrument and normally is not readjusted in the field. The user may, however, maximize linearity over a particular range using the following procedure:

1. Apply mid-range pressure and note the error between the theoretical and actual output signal.
2. Apply full-scale pressure. Multiply the error noted in Step 1 by six and then that product by the Range Down Factor, which is calculated as shown below:

$$\text{Range Down Factor} = \frac{\text{Maximum Allowable Span}}{\text{Calibrated Span}}$$

Add this result to the full-scale output (for negative errors), or subtract the result from the full-scale output (for positive errors) by turning the linearity adjustment screw.

Example: At 4 to 1 Range Down Factor, the mid-scale point is low by 0.05 mA. Therefore, turn the linearity adjustment screw until full-scale output increases by (0.05 mA × 6 × 4) = 1.2 mA.

3. Readjust the zero and span.

FIGURE 3-5. Damping and Linearity Adjustment Screws.

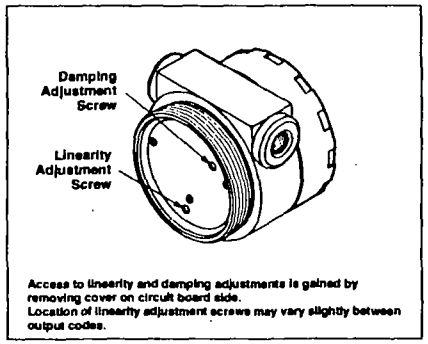

DAMPING ADJUSTMENT

The amplifier boards for output options E, G, and J are designed to permit damping of rapid pulsations in the pressure source through adjustment of the damping screw shown in Figure 3-5 on page 3-8. The adjustment is marked DAMP on the solder side of the amplifier board.

The settings available provide time constant values between 0.2 and 1.66 seconds. The instrument is calibrated and shipped with this control set at the counterclockwise stop (0.2 second time constant). It is recommended that the shortest possible time constant setting be selected. Since the transmitter calibration is not influenced by the time constant setting, the damping may be adjusted with the transmitter connected to the process. Turn the damping control clockwise until the desired damping is obtained.

⚠CAUTION

The adjustment screw has positive stops at both ends. Forcing it beyond the stops may cause permanent damage.

STATIC PRESSURE SPAN CORRECTION FACTOR

High static pressure causes a systematic span shift in the transmitter. It is linear and easily correctable during calibration. Table 3-1 shows the amount of span shift for range codes 3 through 8.

TABLE 3-1. Model 1151 DP/HP Span Shift.

Range Code	Span Shift % Input Per 1,000 psi		
	316L SST	Hastelloy	Monel
3	-1.75%	-1.00%	-1.00%
4	-0.87%	-0.60%	-0.50%
5	-0.81%	-0.70%	-0.75%
6	-1.45%	-1.45%	-1.45%
7	-1.05%	-1.05%	-1.05%
8	-0.55%	-0.55%	-0.55%

The following examples illustrate a compensation method of accounting for the span shift. For more complicated calibration conditions, refer to Rosemount Report D8500141 or contact Customer Central at 1-800-999-9307.

Example 1 - Refer to Table 3-1: One method is to adjust the input and allow the transmitter output to remain at 20 mA. Use the following formula:

Corrected Input

= Desired URV + [(S × URV) × (P/1000)],

Where S = Value from Table 3-1, divided by 100.

To calibrate a Range 4 transmitter 0 to 150 inH_2O (0 to 37.2 kPa) and correct for 1,500 psi static line pressure, use the following correction:

Corrected Input

= 150 + [(–0.0087 × 150) × (1500/1000)]

= 148.04 inches

With 148.04 inches applied as input at atmospheric pressure, set the transmitter to 20 mA. When the transmitter is exposed to 1,500 psi static line pressure, output will be 20 mA at 150 inches input.

Where computers or microprocessor receivers are used, the mathematical definitions used in the preceding tables can be used to automatically and continuously make the correction.

All transmitters should be rezeroed under line pressure to remove zero error.

Example 2 - Refer to Table 3-2: A Model 1151DP Range 4 with a 4–20 mA output operating at 1,200 psi static pressure requires the output at 100% to be corrected to 20.168 mA. Therefore, the transmitter should be adjusted from 4–20.168 mA during calibration. After installation, and with both process inputs pressurized to 1,200 psi, readjust the zero to 4.000 mA to remove the small zero error.

TABLE 3-2. Model 1151DP Static Pressure 4–20 mA Output Code E Corrected Output Calibration at 100% Input SST Isolators.

Static Pressure (psi)	Static Pressure (kPa)	Range 3	Range 4	Range 5
100	689	20.029	20.014	20.013
200	1379	20.057	20.028	20.026
300	2068	20.086	20.042	20.039
400	2758	20.114	20.056	20.052
500	3447	20.143	20.070	20.066
600	4137	20.171	20.084	20.079
700	4826	20.200	20.098	20.092
800	5516	20.228	20.112	20.104
900	6205	20.257	20.126	20.118
1000	6895	20.285	20.140	20.131
1100	7584	20.314	20.154	20.144
1200	8274	20.342	20.168	20.157
1300	8963	20.371	20.182	20.170
1400	9653	20.399	20.196	20.183
1500	10342	20.428	20.210	20.197
1600	11032	20.456	20.224	20.210
1700	11721	20.485	20.238	20.223
1800	12411	20.513	20.252	20.236
1900	13100	20.542	20.266	20.250
2000	13790	20.570	20.280	20.262

Example 3 - Refer to Table 3-3: The correction factor at 100% input shift for a Range 5 transmitter with a 4–20 mA output operating at 1,500 psi static pressure would be:

$S = 0.131 \times 1.5 = 0.197$ mA

Therefore, the calibration for this transmitter would be from 4–20.197 mA.

TABLE 3-3. Output Correction Factors SST Isolators.

Range Code	E Output 4–20 mA	G Output 10–50 mA
3	S = 0.285 P	S = 0.712 P
4	S = 0.140 P	S = 0.350 P
5	S = 0.131 P	S = 0.327 P
6	S = 0.235 P	S = 0.588 P
7	S = 0.170 P	S = 0.425 P
8	S = 0.088 P	S = 0.220 P

NOTE
Correction factors apply to E and G outputs at 100% input (P = static pressure in 1,000 psi).

Section 4 Options

Model 1151 options can simplify installation and operation. This section describes the following options:

- Mounting Brackets
- Analog and LCD Indicating Meters
- Terminal Blocks (Transient Protection and Filter)

MOUNTING BRACKETS

(OPTION CODES B1–B7 AND B9)

Optional mounting brackets available with the Model 1151 allow mounting to a 2-inch pipe or panel. Figure 4-1 shows bracket dimensions and mounting configurations for the various bracket options.

Pipe Mounting Brackets

Option Codes B1, B4, and B7 are sturdy, epoxy-polyester-painted brackets designed for 2-inch pipe mounting. Option Code B1 is constructed of carbon steel with carbon steel bolts. Option Code B4 is the same bracket as Option Code B1, with 316 SST bolts. Option Code B7 is also the same bracket as Option Code B1 with a 316 SST bracket and 316 SST bolts.

Flat Mounting Brackets

Option Codes B3, B6, and B9 are flat brackets designed for 2-inch pipe mounting. Option Code B3 is constructed of carbon steel with a carbon steel U-bolt. Option Codes B6 and B9 are the same bracket configuration as Option Code B3. Option Code B6 provides 316 SST bolts and Option Code B9 provides a 316 SST bracket and 316 SST bolts.

Panel Mounting Brackets

Option codes B2 and B5 are panel brackets designed for bolting to any flat surface.

FIGURE 4-1. Mounting Bracket Options.

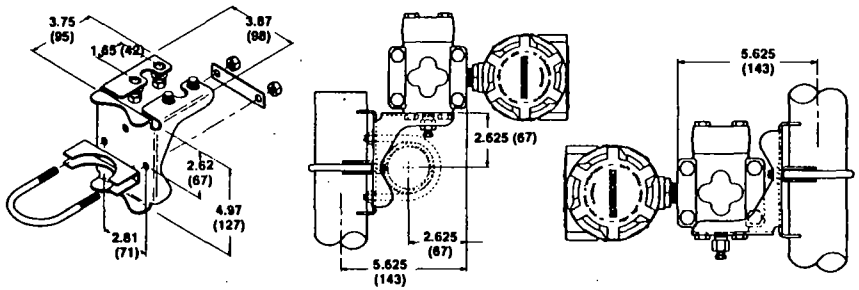

PIPE MOUNTING BRACKET OPTION CODES B1, B4, AND B7

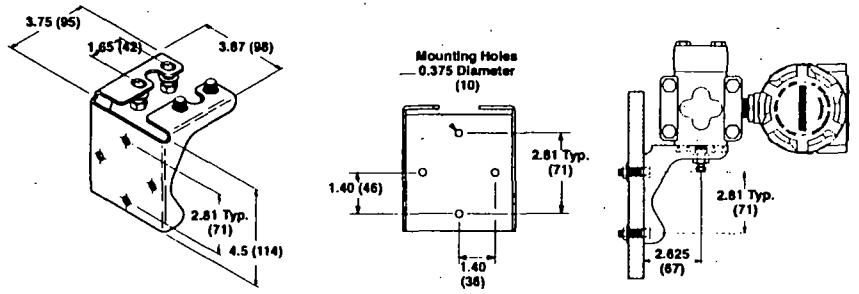

PANEL MOUNTING BRACKET OPTION CODES B2 AND B5

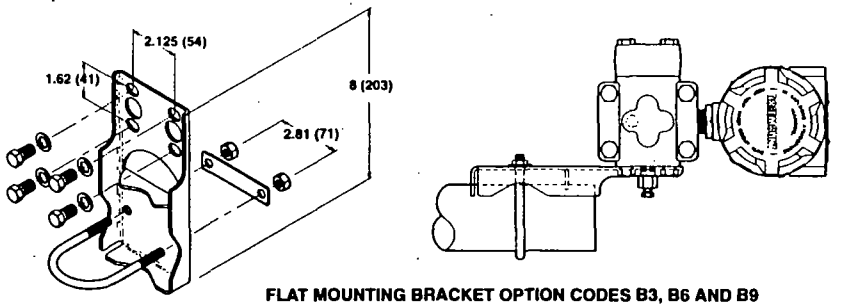

FLAT MOUNTING BRACKET OPTION CODES B3, B6 AND B9

NOTE
Dimensions are in inches (millimeters).

ANALOG METERS (4–20 mA ONLY)

Option Codes M1–M3 and M6 provide local indication of the transmitter output in a variety of scaling configurations with an indicator accuracy of ±2 percent. The plug-in mounting configuration allows for simple installation and removal of the analog meters. The meter scaling options are shown below.

- M1 Linear analog meter, 0-100% scale
- M2 Square-root analog meter, 0-100% flow scale
- M3 Special scaling analog meter, (specify range)
- M6 Square-root analog meter, 0-10 √ scale

⚠WARNING

Explosions can cause death or serious injury. To meet hazardous location requirements, any transmitter with a tag specifying Option Codes I5, I1, N1, I6, I7, or N7 requires an intrinsically safe analog meter (Part No. 01151-0744-XXXX) or an LCD Meter (Part No. 01151-1300-XXXX).

LCD METERS (4–20 mA ONLY)

The LCD meter options, M4 and M7–M9 provide a highly accurate local display of the process variable. A variety of scaling configurations are available and listed as follows:

- M4 Linear LCD Meter, 0 to 100%, User Selectable
- M7 Special scale LCD meter (specify range, mode, and engineering units)
- M8 Square-root LCD meter, 0 to 100%
- M9 Square-root LCD meter, 0 to 10 √

⚠WARNING

Explosions can cause death or serious injury. When adding a meter option to a Model 1151 with an Option Code R1 or R2 terminal block, make sure to change to cemented meter covers with a glass window. Make sure a sticker is located inside the cover that indicates a "cemented cover." This cover is required to maintain explosion-proof approval.

LCD Meter Configuration

The Rosemount LCD meter plugs directly into the Model 1151 to provide a highly accurate digital display of the process variable. The following explains the configuration and assembly of the LCD meter and includes the applicable functional, performance, and physical specifications. This meter adds no voltage drop in the 4–20 mA current loop when connected directly across the transmitter test terminals.

The LCD meter may be configured to meet specific requirements by using the left and right calibration buttons located on the meter face as shown in Figure 4-2. The analog bar graph is also shown in Figure 4-2. The 20-segment bar graph is factory calibrated and represents 4–20 mA directly.

FIGURE 4-2. ...ter.

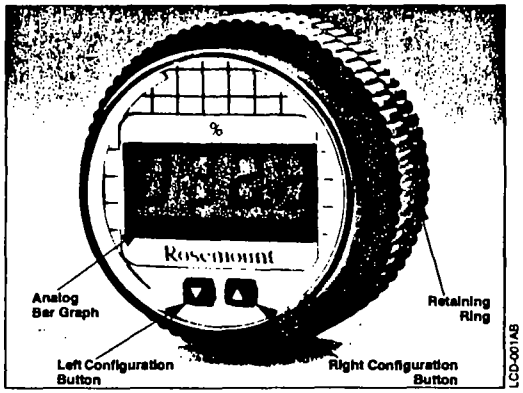

No calibration equipment is required to configure the LCD meter, but there must be a current (between 4 and 20 mA) flowing through the loop. The actual value of the current is not significant. In addition, meter configuration does not affect the transmitter/loop current. Use the following meter configuration procedure to properly configure the LCD meter.

Remove the Cover

1. Unscrew the retaining ring shown in Figure 4-2 and lift the transparent cover off of the housing.

NOTE
The LCD meter time-out is approximately 16 seconds. If keys are not pressed within this period, the indicator reverts to reading the current signal.

Position the Decimal Point and Select the Meter Function

2. Press the left and right configuration buttons simultaneously and release them immediately.
3. To move the decimal point to the desired location, press the left configuration button. Note that the decimal point wraps around.
4. To scroll through the mode options, press the right configuration button repeatedly until the desired mode is displayed. See Table 4-1.

TABLE 4-1. LCD Meter Modes.

Options	Relationship between Input Signal and Digital Display
L in	Linear
L inF	Linear with five-second filter
Srt	Square root
SrtF	Square root with five-second filter

Square root function only relates to the digital display.
The bar graph output remains linear with the current signal.
Square root response
The digital display will be proportional to the square root of the input current where 4 mA=0 and 20 mA=1.0, scaled per the calibration procedure. The transition point from linear to square root is at 25% of full scale flow.
Filter response operates upon "present input" and "input received in the previous five second interval" in the following manner:

Display = (0.75 × previous input) + (0.25 × present input)

This relationship is maintained provided that the previous reading minus the present reading is less than 25% of full scale.

Store the Information

5. Press both configuration buttons simultaneously for two seconds. Note that the meter displays "----" for approximately 7.5 seconds while the information is being stored.

Set the Display Equivalent to a 4 mA Signal

6. Press the left button for two seconds.
7. To decrement the display numbers, press the left configuration button and to increment the numbers, press the right configuration button. Set the numbers between –999 and 1000.
8. To store the information, press both configuration buttons simultaneously for two seconds.

Set the Display Equivalent to a 20 mA Signal

9. Press the right button for two seconds.
10. To decrement the display numbers, press the left configuration button on the display and to increment the numbers, press the right configuration button. Set the numbers between –999 and 9999. The sum of the 4 mA point and the span must not exceed 9999.
11. To store the information, press both configuration buttons simultaneously for two seconds. The LCD meter is now configured.

Replace the Cover

12. Make sure the rubber gasket is seated properly, replace the transparent cover, and replace the retaining ring.

LCD Meter Assembly

Figure 4-3 shows the mounting hardware required to properly install the LCD meter on a transmitter or in the field signal indicator. This mounting hardware may also be used with the Rosemount universal (analog) meter.

FIGURE 4-3. LCD Meter Exploded View.

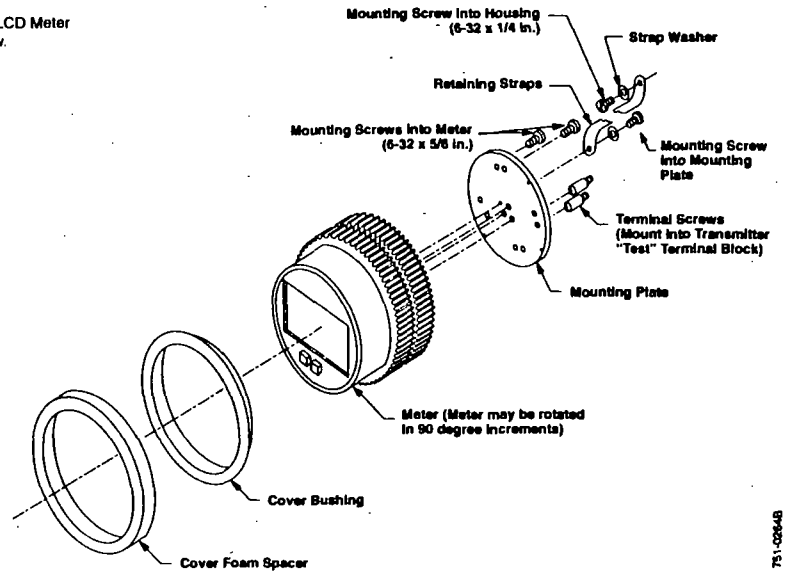

LCD Meter Specifications

Input Signal
4–20 mA dc.

Meter Indication
4-digit LCD showing –999 to 9999. A 20-segment bar graph directly represents the 4–20 mA current.

Scaling/Calibration
4 mA Point Limits: –999 to 1000.
Span limits: 0200 to 9999.
The sum of the 4 mA point and span must not exceed 9999.
Adjustments are made using non-interactive zero and span buttons.

Hazardous Locations Certifications
Approved for use with Model 1151.

⚠WARNING

Explosions can cause death or serious injury. When adding a meter option to a Model 1151 with an Option Code R1 or R2 terminal block, make sure to change to cemented meter covers with a glass window. Make sure a sticker is located inside the cover that indicates a "cemented cover." This cover is required to maintain explosion-proof approval.

Overload Limitation
666 mA.

Temperature Limits
Storage: –40 to 185 °F (–40 to 85 °C).
Operating: –4 to 158 °F (–20 to 70 °C).

Between temperatures –40 to –4 °F (–40 to –20 °C), the loop is intact and the meter is not damaged.

Humidity Limitation
0 to 95% non-condensing relative humidity.

Update Period
750 ms.

Response Time
Responds to changes in input within a maximum of two update periods. If the filter is activated, then the display responds to the change within nine update periods.

Digital Display Resolution
0.05% of calibrated range ±1 digit.

Analog Bar Graph Resolution
5.0% of calibrated range.

Indication Accuracy
0.25% of calibrated range ±1 digit.

Stability
Over Time: 0.1% of calibrated range ±1 digit per 6 months.

Temperature Effect
0.01% of calibrated range per °C on zero.
0.02% of calibrated range per °C on span over the operating temperature range.

Power Interrupt
All calibration constants are stored in EEPROM memory and are not affected by power loss.

Failure Mode
LCD meter failure will not affect transmitter operation.

Under/Over Range Indication
Input current < 3.5 mA: Display blank.
Input current > 22.0 mA: Display flashes 112.5% of full scale value or 9999, whichever is less.

Meter Size
2¼-inch diameter face with ½-inch high characters.

TERMINAL BLOCKS

The terminal block options can increase the Model 1151 (output code "E" only) Pressure Transmitter's ability to withstand electrical transients induced by lightning, welding, heavy electrical equipment, or switch gears. The Model 1151, with the integral transient protection option, meets the standard performance specifications as outlined in this product manual. In addition, the transient protection circuitry meets IEEE Standard 587, Category B and IEEE Standard 472, Surge Withstand Capability.

NOTE
For a transient protection terminal block, specify Option Code R1 or R9.

FIGURE 4-4. Terminal Blocks.

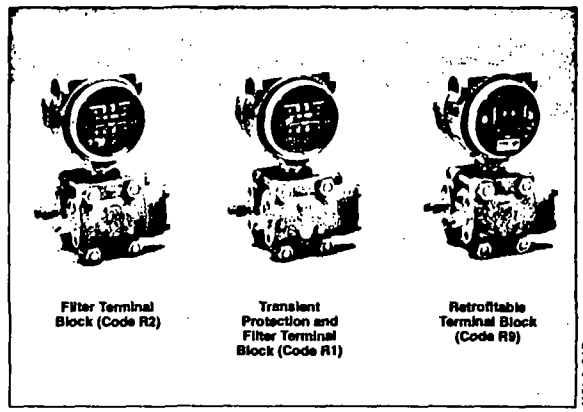

Filter Terminal Block (Option Code R2)

Option Code R2 provides enhanced performance in extremely harsh EMI and RFI environments. This option cannot be retrofitted.

Transient Protection and Filter Terminal Block (Option Code R1)

Option Code R1 provides EMI/RFI protection and the benefit of integral transient protection. (This terminal block can be ordered as a spare part to retrofit existing Model 1151 Transmitters with Option Code R2.)

NOTE
Options R1 and R2 do not require the use of shielded cable in most electrically noisy environments.

Retrofitable Transient Terminal Block (Option Code R9)

The retrofitable transient protection terminal block (Option Code R9) protects any Rosemount Model 1151 Analog Pressure Transmitter (E electronics only without the R1 or R2 option). The terminal block module installs directly into a transmitter providing highly reliable transient protection. Included with the Retrofitable Transient Protection Terminal Block is a hardware kit containing two short mounting screws with two lock washers, one long grounding screw with a square washer, and one label indicating an option has been installed. If any parts of the hardware kit are missing, contact Rosemount North American Response Center at 1-800-THE-RSMT (1-800-654-7768).

R9 Terminal Block Installation

Use a phillips and a flat-blade screwdriver and the following steps to install the Retrofitable Transient Protection Terminal Block:

1. Turn off all power to the Model 1151 on which the terminal block is being installed.

⚠WARNING

Explosion can cause death or serious injury. Do not remove the instrument cover in explosive atmospheres when the circuit is alive.

2. Unscrew the transmitter terminal-side (indicated on the housing nameplate) cover (on the high side of the transmitter) exposing the standard terminal block.
3. Disconnect wiring to the terminal block.
4. Remove the single grounding screw and the two signal terminal screws, with terminal eyelet washers, from the standard terminal block.
5. Set the Retrofitable Transient Protection Terminal Block into the housing, making sure the ground and signal terminals are properly aligned. See Figure 4-5 on page 4-9.
6. Insert the two short mounting screws with washers in the mounting holes and tighten the terminal block to the transmitter. See Figure 4-5 on page 4-9.
7. Turn the transient protector grounding sleeve, located in the grounding hole, just enough to stabilize the unit on the transmitter. See Figure 4-5 on page 4-9. Over tightening the grounding sleeve will shift the terminal block out of alignment.

FIGURE 4-5. Terminal Block Exploded View (Option Code R9).

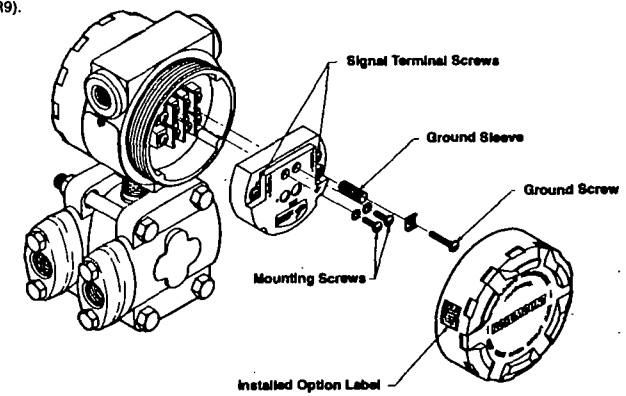

8. Insert the long grounding screw with the square washer into the grounding hole and tighten.
9. Connect the positive power supply wire to the transient protector terminal screw labeled "+ SIGNAL", and the negative power supply wire to the terminal screw labeled "- SIGNAL."
10. Attach the supplied label to the terminal side transmitter cover as shown in Figure 4-5.

⚠WARNING

Explosions can cause death or serious injury. Both transmitter covers must be fully engaged to meet explosion-proof requirements.

11. Replace the terminal side cover on the transmitter.

Terminal Block Specifications (for R1, R2, and R9)

Hazardous Locations Certifications

Approved for use with I5, K5, I6, C6, E6, E8, I8[(1)], I1[(1)(2)], N1, E7, I7, and N7 approved transmitters.

Materials of Construction

Noryl plastic.

Loop Resistance

6 Ω

Transient Protection Limits (for R1 and R9)

IEEE 587 Category B

6 kV Crest (1.2 × 50 µs).

3 kV Crest (8 × 20 µs).

6 kV (0.5 µs at 100 kHz).

IEEE 472

SWC 2.5 kV Crest,

1 MHz waveform.

Accuracy Specification

Same as specified electronics accuracy when transmitter is calibrated with installed Retrofitable Transient Protection Terminal Block.

(1) When the transient version of the filter module is used in an intrinsically safe installation, supply transmitter from a galvanically isolated barrier.
(2) I1 and R1/R9 are not compatible.

Section 5

Maintenance and Troubleshooting

This section describes a variety of troubleshooting options associated with the Model 1151 Alphaline® transmitter and is divided into the following sections.

Hardware Maintenance

- Hardware Diagnostics
- Transmitter Disassembly
- Sensor Module Checkout
- Transmitter Reassembly
- Optional Plug-in Meters
- Return of Material

Contact Customer Central at 1-800-999-9307 for further technical support and the North American Response Center at 1-800-654-7768 for equipment service assistance.

⚠WARNING

Use only the procedures and new parts specifically referenced in this manual. Unauthorized procedures or parts can affect product performance and the output signal used to control a process, and may render the instrument dangerous. Direct any questions concerning these procedures or parts to Rosemount Inc.

HARDWARE DIAGNOSTICS

If you suspect a malfunction, see Table 5-1 on page 5-2 to verify that transmitter hardware and process connections are in good working order. Under each of the five major symptoms, you will find specific suggestions for solving the problem. Always deal with the most likely and easiest to check conditions first.

⚠WARNING

Isolate a failed transmitter from its pressure source as soon as possible. Pressure that may be present could cause death or serious injury to personnel if the transmitter is disassembled or ruptures under pressure.

TABLE 5-1. Troubleshooting
Symptoms and Corrective Action.

Symptom	Potential Source	Corrective Action
High Output	Primary Element	Check for restrictions at primary element.
	Impulse Piping	Check for leaks or blockage. Ensure that blocking valves are fully open. Check for entrapped gas in liquid lines and for liquid in dry lines. Ensure that the density of fluid in impulse lines in unchanged. Check for sediment in transmitter process flanges.
	Power Supply	Check the power supply output voltage at the transmitter.
	Transmitter electronics	Make sure that post connectors are clean. If the electronics are still suspect, substitute new electronics.
	Sensing Element	The sensing element is not field repairable and must be replaced if found to be defective. See "Transmitter Disassembly" later in this section for instructions on disassembly. Check for obvious defects, such as punctured isolating diaphragm or fill fluid loss, and contact Rosemount North American Response Center at 1-800-THE-RSMT (1-800-654-7768).
Erratic Output	Loop Wiring	Check for adequate voltage to the transmitter. Check for intermittent shorts, open circuits and multiple grounds. **⚠CAUTION** Do not use higher than the specified voltage to check the loop, or damage to the transmitter electronics may result.
	Process Pulsation	Adjust Damping
	Transmitter Electronics	Make sure the post connectors are clean. If the electronics are still suspect, substitute new electronics.
	Impulse Piping	Check for entrapped gas in liquid lines and for liquid in dry lines.

TABLE 5-1. (continued).

Symptom	Potential Source	Corrective Action
Low Output or No Output	Primary Element	Check the insulation and condition of primary element. Note any changes in process fluid properties that may affect output.
	Loop Wiring	Check for adequate voltage to the transmitter. Check the milliamp rating of the power supply against the total current being drawn for all transmitters being powered. Check for shorts and multiple grounds. Check for proper polarity at the signal terminal. Check loop impedance. Check whether the transmitter is in multidrop mode, thus locking the output at 4 mA. **⚠CAUTION** Do not use higher than the specified voltage to check the loop, or damage to the transmitter electronics may result. Check wire insulation to detect possible shorts to ground.
	Impulse Piping	Ensure that the pressure connection is correct. Check for leaks or blockage. Check for entrapped gas in liquid lines. Check for sediment in the transmitter process flange. Ensure that blocking valves are fully open and that bypass valves are tightly closed. Ensure that density of the fluid in the impulse piping is unchanged.
	Sensing Element	The sensing element is not field repairable and must be replaced if found to be defective. See "Transmitter Disassembly" later in this section for instructions on disassembly. Check for obvious defects, such as punctured isolating diaphragm or fill fluid loss, and contact Rosemount North American Response Center at 1-800-THE-RSMT (1-800-654-7768).
Transmitter Does Not Calibrate Properly	Pressure Source/Correction	Check for restrictions or leaks. Check for proper leveling or zeroing of the pressure source. Check weights/gauge to ensure proper pressure setting. Determine if the pressure source has sufficient accuracy.
	Meter	Determine if the meter is functioning properly.
	Power Supply	Check the power supply output voltage at transmitter.
	Transmitter Electronics	Make sure the post connectors are clean. If electronics are still suspect, substitute with new electronics.
	Sensing Element	The sensing element is not field repairable and must be replaced if found to be defective. See "Transmitter Disassembly" later in this section for instructions on disassembly. Check for obvious defects, such as punctured isolating diaphragm or fill fluid loss, and contact Rosemount North American Response Center at 1-800-THE-RSMT (1-800-654-7768).

TRANSMITTER DISASSEMBLY

Read the following information carefully before you disassemble a transmitter. General information concerning the process sensor body, electrical housing, and a procedure for their separation follow. Figure 5-1 shows an exploded view of the transmitter.

⚠WARNING

The following performance limitations may inhibit efficient or safe operation. Critical applications should have appropriate diagnostic and backup systems in place.

Pressure transmitters contain an internal fill fluid. It is used to transmit the process pressure through the isolating diaphragms to the pressure sensing element. In rare cases, oil leak paths in oil-filled pressure transmitters can be created. Possible causes include: physical damage to the isolator diaphragms, process fluid freezing, isolator corrosion due to an incompatible process fluid, etc.

A transmitter with an oil fill fluid leak can continue to perform normally for a period of time. Sustained oil loss will eventually cause one or more of the operating parameters to exceed published specifications while a small drift in operating point output continues. Symptoms of advanced oil loss and other unrelated problems include:

- Sustained drift rate in true zero and span or operating point output or both
- Sluggish response to increasing or decreasing pressure or both
- Limited output rate or very nonlinear output or both
- Change in output process noise
- Noticeable drift in operating point output
- Abrupt increase in drift rate of true zero or span or both
- Unstable output
- Output saturated high or low

⚠WARNING

Explosion can cause death or serious injury. Do not remove the instrument cover in explosive atmospheres when the circuit is alive.

⚠WARNING

Explosions can cause death or serious injury. Do not break the housing seal in explosive environments. Breaking the housing seal invalidates the explosion-proof housing rating.

Electrical connections are located in a compartment identified as TERMINAL SIDE on the nameplate. The signal and test terminals are accessible by unscrewing the cover on the terminal side. The terminals to the housing must not be removed, or the housing seal between compartments will be broken. (Not applicable to R1 and R2 Options.)

Process Sensor Body Removal

Be aware of the following guidelines:

- The transmitter should be removed from service before disassembling the sensor body.
- Process flanges can be detached by removing the four large bolts.

⚠CAUTION

Do not scratch, puncture, or depress the isolating diaphragms. Damaging the isolating diaphragms can inhibit transmitter performance.

- Isolating diaphragms may be cleaned with a soft rag, mild cleaning solution, and clear water rinse.

⚠CAUTION

Do not use chlorine or acid solutions to clean the diaphragms. Damaging the isolating diaphragms can inhibit transmitter performance.

- Flange adapters and process flanges may be rotated or reversed for mounting convenience.

FIGURE 5-1. Differential Pressure (DP) Transmitter Exploded View.

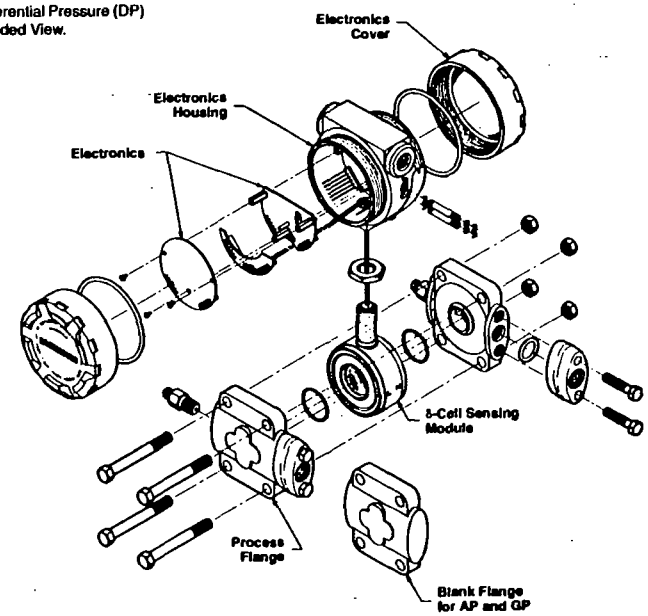

Removing the Sensor from the Electrical Housing

1. Disconnect the power source from the transmitter.
2. Unscrew the cover on the terminal side of the transmitter.
3. Remove the screws and unplug the electronics; see Figure 5-2.
4. Loosen the lock nut.
5. Remove the standoffs.

⚠CAUTION

Do not damage the isolating diaphragms when unscrewing the sensor module. Damaging the isolating diaphragms can inhibit transmitter performance.

6. Unscrew the sensing module from the electronics housing, being careful not to damage the sensor leads. Carefully pull the header assembly board through the hole. The threaded connection has a sealing compound on it and must be broken loose.

The sensing module is a welded assembly and cannot be further disassembled.

FIGURE 5-2. Removal of Electronics.

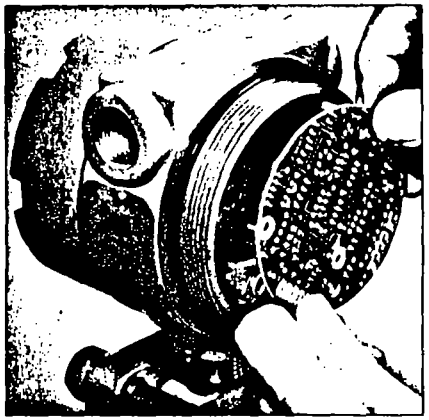

Sensor Module Checkout

The sensor module is not field repairable and must be replaced if found to be defective. If no obvious defect is observed (such as a punctured isolating diaphragm or fill fluid loss), the sensor module can be checked as follows.

1. Carefully pull the header assembly board off of the post connectors. Rotate the board 180 degrees about the axis formed by the connecting leads. The sensor module and electronics housing can remain attached for checkout.

NOTE
Do not touch the transmitter housing when checking resistances, or a faulty reading can result.

2. Check the resistance between the sensor module housing and pins one through four. This checks the resistance between both capacitor plates and the sensing diaphragm, which is grounded to the housing. This resistance should be greater than 10 MΩ.
3. Check the resistance between pin eight and the sensor module to ensure that the module is grounded. Resistance should be zero.

NOTE
The above procedure does not completely test the sensor module. If circuit board replacement does not correct the abnormal condition, and no other problems are obvious, replace the sensor module.

FIGURE 5-3. Header Board Connections.

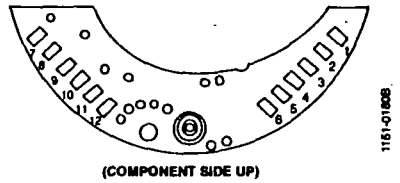

REASSEMBLY PROCEDURE

Follow these procedures carefully to ensure proper reassembly.

Preliminary Precaution

Inspect all O-rings and replace if necessary. Lightly grease with silicone oil to ensure a good seal. Use halocarbon grease for inert fill options.

⚠WARNING

Explosions can cause death or serious injury. Both transmitter covers must be fully engaged to meet explosion-proof requirements.

Connecting the Electrical Housing to the Sensor

1. Insert the header assembly board through the electronics housing.
2. Use a sealing compound (*Loctite 222* - Small Screw Threadlocker) on the threads of the sensor module to ensure a watertight seal on the housing.
3. Screw the sensor module into the electrical housing making sure that the threads are fully engaged. Be careful not to damage or twist the sensor leads.
4. Align the sensor module with the high and low pressure sides oriented for convenient installation.
5. Tighten the lock nut.

Backup Ring and O-ring Installation

All HP transmitters and GP Range 9 and 0 transmitters require metal backup rings to ensure O-ring integrity. Figure 5-4 on page 5-8 illustrates the position and orientation of the metal backup rings. (Backup rings are not required on AP or DP transmitters or GP Range 3-8 transmitters.)

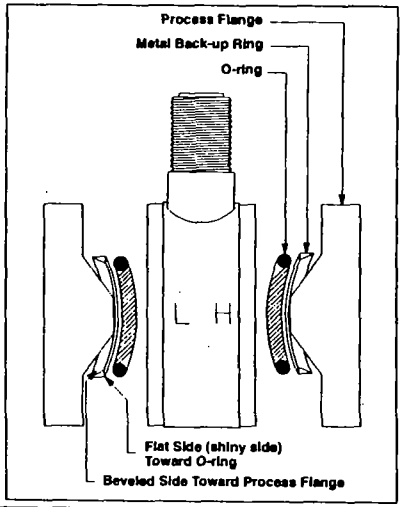

FIGURE 5-4. Detail Showing Process O-ring and Backup Ring Installation of Module Seal for Model 1151HP and GP Range 9 (GP Range 0 Requires Only One O-ring and Backup O-ring).

NOTE

Handle the backup ring carefully, as it is fragile. Examine the ring carefully. One side is beveled, while the other side is flat. The flat side appears more shiny when viewed from above.

1. Clean the sealing surfaces carefully.
2. Place the module on a flat surface, "H" side up.
3. Place the greased flange O-ring around the isolator and push it into the cavity.

⚠WARNING

Process leaks can cause death or serious injury. An incorrectly installed backup ring can destroy the o-ring and cause process leaks. Install the backup ring using the following procedure.

4. For all HP transmitters and GP transmitters Ranges 9 and 0, place the backup ring, shiny side down, on top of the O-ring. This places the flat side of the backup ring against the O-ring.
5. Carefully place the flange on top of the module, beveled side down so that the beveled flange surface mates with the beveled surface of the backup ring.
6. Keeping the flange and module together, turn them over so the "L" side is up. Repeat Steps 3 through 5. As before, the flat side of the backup ring must rest against the O-ring.
7. Insert the four flange bolts.
8. Tighten the nuts finger tight, making sure the flanges remain parallel. The transmitter may now be moved without disturbing the O-rings.
   a. Tighten one bolt until the flanges seat.
   b. Torque down the bolt diagonally across.
   c. Torque down the first bolt.
   d. Torque down the two remaining bolts.
   e. Inspect the flange-to-sensor seating to be sure that the flanges are not cocked.
   f. Check that all four bolts are tightened to approximately 33 ft-lb (39 Nm).
9. Recalibrate the transmitter.

NOTE

If the Model 1151 Range 3 transmitter sensor module serial number is below 2,900,000, it must be temperature cycled whenever changing or rebolting flanges.

Optional Plug-in Meters

The optional indicating meters available for Rosemount Model 1151 transmitters are listed in **Section 4 Options**. Please be aware of the following information while assembling the meter assembly. Refer to Table 6-6 on page 6-13 for part references.

- The meter may be rotated in 90-degree increments for convenient reading.

⚠WARNING

Explosions can cause death or serious injury. Do not disassemble the glass in the meter cover in explosive atmospheres. Disassembling the glass in the meter cover invalidates the explosion-proof meter rating.

- If the meter cover is removed for any reason, be sure the O-ring is in place between the cover and housing before reattachment. To maintain an explosion-proof condition, the glass in the meter cover must not be disassembled for any reason.

RETURN OF MATERIAL

To expedite the return process, call the Rosemount North American Response Center using our 800-654-RSMT (7768) toll-free number. This center, available 24 hours a day, will assist you with any needed information or materials.

The center will ask for product model and serial numbers, and will provide a Return Material Authorization (RMA) number. For safety reasons, the center will also ask for the name of the process material the product was last exposed to.

⚠WARNING

Exposure to hazardous substances can cause death or serious injury. If a hazardous substance is identified, a Material Safety Data Sheet (MSDS), required by law to be available to people exposed to specific hazardous substances, must be included with the returned goods.

The North American Response Center will detail the additional information and procedures necessary to return goods exposed to hazardous substances.

Section 6 Specifications and Reference Data

FUNCTIONAL SPECIFICATIONS

Service

Liquid, gas, and vapor applications.

Ranges

Minimum span equals the upper range limit (URL) divided by rangedown. Rangedown varies with the output code. See Table 6-1.

Outputs

Code E, Analog

4–20 mA dc, linear with process pressure.

Code G, Analog

10–50 mA dc, linear with process pressure.

Code J, Analog

4–20 mA dc, square root of differential input pressure between 4 and 100% of input. Linear with differential input pressure between 0 and 4% of input.

Code L, Low Power

0.8 to 3.2 V dc, linear with process pressure.

Code M, Low Power

1 to 5 V dc, linear with process pressure.

TABLE 6-1. Rangeability.

Output Code	Minimum Span	Maximum Span
E, G, J	URL/6	URL
L	URL/1.1	URL
M	URL/2	URL

TABLE 6-2. Model 1151 Transmitter Range Availability by Model (URL = Upper Range Limit).

Range Code	Model 1151 Ranges (URL)	DP	HP	GP	AP
3	30 inH$_2$0 (7.46 kPa)	•	NA	•	NA
4	150 inH$_2$0 (37.3 kPa)	•	•	•	•
5	750 inH$_2$0 (186.4 kPa)	•	•	•	•
6	100 psi (689.5 kPa)	•	•	•	•
7	300 psi (2068 kPa)	•	•	•	•
8	1,000 psi (6895 kPa)	•	NA	•	•
9	3,000 psi (20684 kPa)	NA	NA	•	NA
0	6,000 psi (41369 kPa)	NA	NA	•	NA

TABLE 6-3. Model 1151 Output Code Availability.

Code	Model 1151 Output Options/Damping	DP	HP	GP	DP/GP/Seals	AP
E	4–20 mA, linear, analog/variable	•	•	•	•	•
G	10–50 mA, linear, analog/variable	•	•	•	•	•
J(1)	4–20 mA, square root, analog/variable	•	•	NA	NA	NA
L	0.8 to 3.2 V, linear, low power/fixed	•	•	•	•	•
M	1 to 5 V, linear, low power/fixed	•	•	•	•	•

(1) Available with Ranges 3–5.

Power Supply

External power supply required. Transmitter operates on:

12 to 45 V dc with no load for Output Codes E and J.
30 to 85 V dc with no load for Output Code G.
5 to 12 V dc for Output Code L.
8 to 14 V dc for Output Code M.

Where:

FIGURE 6-1. Power Supply Load Limitations.

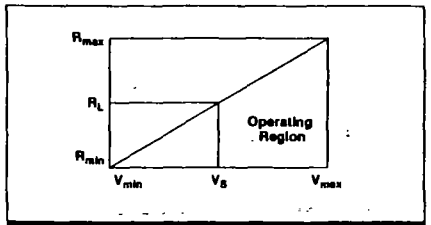

Code	V_{min}	V_{max}	R_{min}	R_{max}	R_L at Supply Voltage (V_S)
E, J	12	45	0	1650	$R_L = 50 (V_S - 12)$
G	30	85	0	1100	$R_L = 20 (V_S - 30)$
L	5	12	Low Power Minimum Load Impedance: 100 kΩ		
M	8	14			

NOTE
For CSA Approvals (codes E and J), V_{max} = 42.4 V dc.

Current Consumption (Low Power Only) Under Normal Operating Conditions

Output Code L
1.5 mA dc.

Output Code M
2.0 mA dc.

Span and Zero

Output Codes E, G, J, L, and M
Span and zero are continuously adjustable.

Hazardous Locations Certifications

Stainless steel certification tag is provided.

Factory Mutual (FM) Approvals

FM Explosion proof tag is standard. Appropriate tag will be substituted if optional certification is selected.

Default Explosion proof: Class I, Division 1, Groups B, C, D. Dust-Ignition proof: Class II, Division 1, Groups E, F, G; Class III, Division 1. Indoor and outdoor use (NEMA 4X). Factory Sealed.

I5 Intrinsically Safe: Class I, Division 1, Groups A, B, C, D; Class II, Division 1, Groups E, F, G; Class III, Division 1 when connected in accordance with Rosemount drawing 01151-0214 (See Appendix A). Non-incendive: Class I, Division 2, Groups A, B, C, D.

K5 Explosion proof, Intrinsic Safety, and Non-incendive combination.

Canadian Standards Association (CSA) Approvals

E6 Explosion proof for Class I, Division 1, Groups C and D. Dust-Ignition proof: Class II, Division 1, Groups E, F, and G; Class III, Division 1. Suitable for Class I, Division 2, Groups A, B, C, D. CSA Enclosure type 4X. Factory sealed.

I6 Intrinsically Safe: Class I, Division 1, Groups A, B, C, D; Temperature Code T2D when connected in accordance with Rosemount drawing 01151-2575. (See Appendix A.)

C6 Explosion proof, Division 2, and Intrinsic Safety combination.

K6 Combined **E6**, **I6**, **E8**, and **I8**.

Standards Association of Australia (SAA)

E7 Flameproof
Ex d IIB + H_2 T6.
Class I, Zone 1.

Dust-Ignition proof
DIP T6.
Class II.

Special Conditions: For transmitters having NPT or PG cable entry threads, an appropriate flame proof thread adaptor shall be used to facilitate application of certified flame proof cable glands.

I7 Intrinsically Safe
Ex ia IIC T6 (T_{amb} = 40 °C).
Ex ia IIC T5 (T_{amb} = 70 °C).
Class I, Zone 0. (See Appendix A.)

Special Conditions: Observe electrical connection parameters when installing transmitter.

N7 Type N
Ex n IIC T6 (T_{amb} = 40 °C).
Ex n IIC T5 (T_{amb} = 70 °C).
Class I, Zone 2.

Special Conditions: The equipment must be connected to a supply voltage which does not exceed the rated voltage. The enclosure endcaps must be correctly fitted whilst the equipment is energized.

CESI/CENELEC Approvals

E8 Flame proof
EEx d IIC T6.

I8 Intrinsically Safe
EEx ia IIC T6 (T_{amb} = 40 °C); P_{max} = 0.75 W.
EEx ia IIC T5 (T_{amb} = 55 °C); P_{max} = 1.00 W.
EEx ia IIC T5 (T_{amb} = 80 °C); P_{max} = 1.00 W.

Special Conditions: When transient protection terminal options R1 or R9 are installed, the transmitter must be supplied from a galvanically isolated intrinsic safety barrier.

BASEEFA/CENELEC Approvals

I1 Intrinsically Safe
EEx ia IIC T5 (T_{amb} = 40 °C).
EEx ia IIC T4 (T_{amb} = 80 °C).

N1 Type N
Output Code E
Ex N II T6; Un = 28 V.

Output Code F
Ex N II T5; Un = 45 V.

Output Code J
Ex N II T5; Un = 30 V; In = 30 mA.

Other Approvals

The Rosemount 1151 carries many other national and international approvals/certifications. Consult factory for other available options.

TABLE 6-4. Intrinsic Safety Entity Parameters.

BASEEFA (United Kingdom)	CESI (Italy)	SAA (Australia)
$U_{max\ in}$ = 28 V dc $I_{max\ in}$ = 120 mA	U_i = 30 V I_i = 200 mA P_i = 0.75 W (T6) P_i = 1.0 W (T4 and T5) C_i = 0.01 µF L_i = 20 µF	U_i = 30 V I_i = 200 mA C_i = 0.034 µF L_i = 20 µH

Zero Elevation and Suppression

Output Codes E and G

Zero elevation and suppression must be such that the lower range value is greater than or equal to the (–URL) and the upper range value is less than or equal to the (+URL). The calibrated span must be greater than or equal to the minimum span.

Output Code J

Zero is adjustable up to 10% of the calibrated flow span.

Output Code L

Zero is adjustable ±10% of URL and span is adjustable from 90 to 100% of URL.

Output Code M

Zero is adjustable ±50% of URL and span is adjustable from 50 to 100% of URL.

Temperature Limits

Electronics Operating

Code E	–40 to 200 °F (–40 to 93 °C).
Code G, L, M	–20 to 200 °F (–29 to 93 °C).
Code J	–20 to 150 °F (–29 to 66 °C).

Sensing element operating

Silicone fill: –40 to 220 °F (–40 to 104 °C).
Inert fill: 0 to 160 °F (–18 to 71 °C).

NOTE
When specifying Option Codes W4 and W6, sensing element operating temperatures are 32 to 200 °F (0 to 93 °C) for silicone fill and 32 to 160 °F (0 to 71 °C) for inert fill.

Storage

Codes E, G, L, M: –60 to 250 °F (–51 to 121 °C).
Code J: –60 to 180 °F (–51 to 82 °C).

Static Pressure Limits

Transmitters operate within specifications between the following limits:

Model 1151DP
0.5 psia (3.45 kPa) to 2,000 psig (13790 kPa).

Model 1151HP
0.5 psia (3.45 kPa) to 4,500 psig (31027 kPa).

Model 1151AP
0 psia to the URL.

Model 1151GP
0.5 psia (3.45 kPa) to the URL.

Overpressure Limits

Transmitters withstand the following limits without damage:

Model 1151DP
0 psia to 2,000 psig (0 to 13790 kPa).

Model 1151HP
0 psia to 4,500 psig (0 to 31027 kPa).

Model 1151AP
0 psia to 2,000 psia (0 to 13790 kPa).

Model 1151GP
Ranges 3–8: 0 psia to 2,000 psig (0 to 13790 kPa).
Range 9: 0 psia to 4,500 psig (31027 kPa).
Range 0: 0 psia to 7,500 psig (51710 kPa).

Burst Pressure Limit
All models: 10,000 psig (68.95 MPa) burst pressure on the flanges.

Humidity Limits
0 to 100% relative humidity.

Volumetric Displacement
Less than 0.01 in^3 (0.16 cm^3).

Damping
Numbers given are for silicone fill fluid at room temperature. The minimum time constant is 0.2 seconds (0.4 seconds for Range 3). Inert-filled sensor values would be slightly higher.

Output Codes E and G
Time constant continuously adjustable between minimum and 1.67 seconds.

Output Code J
Time constant continuously adjustable between minimum and 1.0 second.

Output Codes L, M
Damping is fixed at minimum time constant.

Turn-on Time
Maximum of 2.0 seconds with minimum damping. Low power output is within 0.2% of steady state value within 200 ms after application of power.

PERFORMANCE SPECIFICATIONS

(Zero-based calibrated ranges, reference conditions, silicone oil fill, 316 SST isolating diaphragms.)

Accuracy

Output Codes E, G, L, and M
±0.2% of calibrated span for Model 1151DP Ranges 3 through 5.
All other ranges and transmitters, ±0.25% of calibrated span.

Output Code J
±0.25% of calibrated span.

Stability

Output Codes E and G
±0.2% of URL for six months for Ranges 3 through 5. (±0.25 for all other ranges.)

Output Codes J, L, and M
±0.25% of URL for six months.

Temperature Effect

Output Code E, G, L, and M
[–20 to 200 °F (–29 to 93 °C)]
For Ranges 4 through 0
Zero Error = ±0.5% URL per 100 °F.
Total Error = ±(0.5% URL + 0.5% of calibrated span) per 100 °F (56 °C); double the effect for Range 3.

Output Code J
The total output effect, whether at zero or full scale, including zero and span errors is ±1.5% of URL per 100 °F (56 °C), or ±2.5% of URL per 100 °F (56 °C) for Range 3.

Static Pressure Effect

DP Transmitters
Zero Error: ±0.25% of URL for 2,000 psi (13790 kPa) or ±0.5% for Range 3, correctable through rezeroing at line pressure.
Span Error: Correctable to ±0.25% of input reading per 1,000 psi (6895 kPa), or to ±0.5% for Range 3. For Output Code J, the span error is correctable to ±0.125% of output reading per 1,000 psi, or to ±0.25% for Range 3.

HP Transmitters
Zero Error: ±2.0% of URL for 4,500 psi (31027 kPa), correctable through rezeroing at line pressure.
Span Error: Correctable to ±0.25% of input reading per 1,000 psi (6895 kPa).
For Output Code J, the span error is correctable to ±0.125% of output reading per 1,000 psi (6895 kPa), or to ±0.25% for Range 3.

Vibration Effect
0.05% of URL per g to 200 Hz in any axis.

Power Supply Effect

Output Codes E, G, and J
Less than 0.005% of output span per volt.

Output Codes L, M
Output shift of less than 0.05% of URL for a 1 V dc power supply shift.

Load Effect

Output Codes E, G, and J
No load effect other than the change in power supplied to the transmitter.

Output Codes L, M
Less than 0.05% of URL effect for a change in load from 100 kΩ to infinite ohms.

Short Circuit Condition (Output Codes L and M only)
No damage to the transmitter will result when the output is shorted to common or to power supply positive (limit 12 V).

EMI/RFI Effect
Output shift of less than 0.1% of span when tested to IEC 801-3 from 20 to 1000 MHz and for field strengths up to 30 V/m. (Output Code J is 0.1% of flow span.)

Mounting Position Effect
Zero shift of up to 1 inH_2O (0.24 kPa) that can be calibrated out. Range 3 transmitters with Output Code J should be installed with the diaphragm in the vertical plane.

PHYSICAL SPECIFICATIONS (STANDARD CONFIGURATION)

Wetted Materials

Isolating Diaphragms

316L SST, Hastelloy C-276, Monel, gold-plated Monel, or Tantalum. See ordering table for availability per model type.

Drain/Vent Valves

316 SST, Hastelloy C, or Monel. See ordering table for availability per model type.

Process Flanges and Adaptors

Plated carbon steel, 316 SST, Hastelloy C, or Monel. See ordering table for availability per model type.

Wetted O-rings

Viton (other materials also available). With gold-plated Monel diaphragms (diaphragm Code _6), special fluorocarbon O-rings are supplied.

Non-wetted Materials

Fill Fluid

Silicone oil or inert fill.

Bolts and Bolting Flange (GP and AP only)

Plated carbon steel.

Electronics Housing

Low-copper aluminium. NEMA 4X. IP 65, IP 66.

Cover O-rings

Buna-N.

Paint

Polyurethane.

Process Connections

¼–18 NPT on 2.125-in. (54-mm) centers on flanges for Ranges 3, 4, and 5.

¼–18 NPT on 2.188-in. (56-mm) centers on flanges for Ranges 6 and 7.

¼–18 NPT on 2.250-in. (57-mm) centers on flanges for Range 8.

½–14 NPT on adaptors.

For Ranges 3, 4, and 5, flange adaptors can be rotated to give centers of 2.0 in. (51 mm), 2.125 in. (54 mm), or 2.250 in. (57 mm).

Electrical Connections

½–14 NPT conduit entry with screw terminals and integral test jacks compatible with miniature banana plugs (Pomona 2944, 3690, or equivalent).

Weight

12 lb (5.4 kg) for AP, DP, GP, and HP transmitters, excluding options.

FIGURE 6-2. Dimensional Drawing for Model 1151 Transmitter.

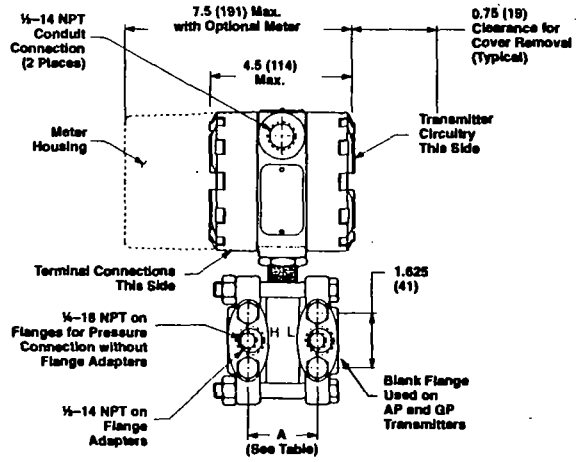

Range	Flange Distance "A" Center to Center	
	Inches	mm
3, 4, 5	2.125	54
6, 7	2.188	56
8	2.250	57
9	2.281	58
0	2.328	59

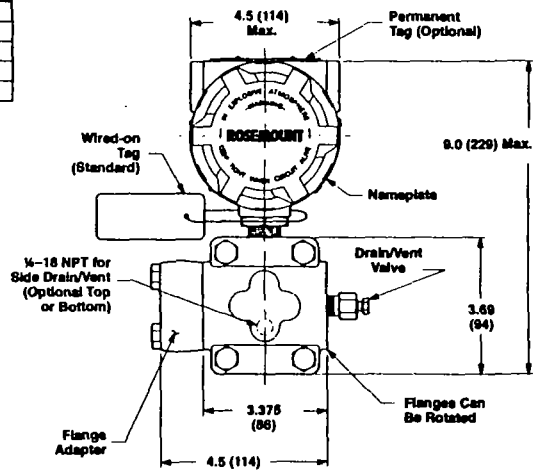

NOTE
Dimensions are in inches (millimeters).

1151-1151A.B05A

TABLE 6-5. Model 1151 Model Number Table.

• = Applicable — = Not Applicable

Model	Transmitter Type (select one)	DP	HP	GP	AP
1151DP	Differential Pressure Transmitter	•	—	—	—
1151HP	Differential Pressure Transmitter for High Line Pressures	—	•	—	—
1151GP	Gage Pressure Transmitter	—	—	•	—
1151AP	Absolute Pressure Transmitter	—	—	—	•

Code	Pressure Ranges (URL) (select one)	DP	HP	GP	AP
3	30 inH_2O (7.46 kPa)	•	—	•	—
4	150 inH_2O (37.3 kPa)	•	•	•	•
5	750 inH_2O (186.4 kPa)	•	•	•	•
6	100 psi (689.5 kPa)	•	•	•	•
7	300 psi (2068 kPa)	•	•	•	•
8	1,000 psi (6895 kPa)	•	—	•	•
9	3,000 psi (20684 kPa)	—	—	•	—
0	6,000 psi (41369 kPa)	—	—	•	—

Rangeability	
Output Code	Min.Span
E, G, J	URL/6
L	URL/1.1
M	URL/2

Code	Transmitter Output (select one)	DP	HP	GP	AP
E	4–20 mA, Linear, Analog/Variable Damping	•	•	•	•
G	10–50 mA, Linear, Analog/Variable Damping	•	•	•	•
J	4–20 mA, Square Root, Analog/Variable Damping	•	•	—	—
L	0.8 to 3.2 V, Linear, Low Power/Fixed Damping	•	•	•	•
M	1 to 5 V, Linear, Low Power/Fixed Damping	•	•	•	•

Code	MATERIALS OF CONSTRUCTION [1] Flanges/Adaptors	Drain/Vents	Diaphragms	Fill Fluid	DP	HP	GP[2]	AP[2]
52	Nickel-plated Carbon Steel	316 SST	316L SST	Silicone	•	•	•	•
53	Nickel-plated Carbon Steel	316 SST	*Hastelloy C*	Silicone	•	•	•	•
54	Nickel-plated Carbon Steel	316 SST	*Monel*	Silicone	•	•	•	•
55	Nickel-plated Carbon Steel	316 SST	Tantalum	Silicone	•	—	•	—
56	Nickel-plated Carbon Steel	316 SST	Gold-plated *Monel*	Silicone	•	—	•	—
12	Plated Carbon Steel	316 SST	316L SST	Silicone	•	•	•	•
22	316 SST	316 SST	316L SST	Silicone	•	•	•	•
23	316 SST	316 SST	*Hastelloy C*	Silicone	•	•	•	•
24	316 SST	316 SST	*Monel*	Silicone	•	•	•	•
25	316 SST	316 SST	Tantalum	Silicone	•	—	•	—
26	316 SST	316 SST	Gold-plated *Monel*	Silicone	•	—	•	—
33	*Hastelloy C*	*Hastelloy C*	*Hastelloy C*	Silicone	•	•	•	•
34	*Hastelloy C*	*Hastelloy C*	*Monel*	Silicone	•	—	•	—
35	*Hastelloy C*	*Hastelloy C*	Tantalum	Silicone	•	—	•	—
36	*Hastelloy C*	*Hastelloy C*	Gold-plated *Monel*	Silicone	•	—	•	—
43	*Monel*	*Monel*	*Hastelloy C*	Silicone	•	•	•	•
44	*Monel*	*Monel*	*Monel*	Silicone	•	•	•	•
45	*Monel*	*Monel*	Tantalum	Silicone	•	—	•	—
46	*Monel*	*Monel*	Gold-plated *Monel*	Silicone	•	—	•	—
73[3]	316 SST	*Hastelloy C*	*Hastelloy C*	Silicone	•	•	•	•
83[3]	Nickel-plated Carbon Steel	*Hastelloy C*	*Hastelloy C*	Silicone	•	•	•	•
5A	Nickel-plated Carbon Steel	316 SST	316L SST	Inert	•	—	•	—
5B	Nickel-plated Carbon Steel	316 SST	*Hastelloy C*	Inert	•	—	•	—
5C	Nickel-plated Carbon Steel	316 SST	*Monel*	Inert	•	—	•	—
5D	Nickel-plated Carbon Steel	316 SST	Tantalum	Inert	•	—	•	—
1A	Plated Carbon Steel	316 SST	316L SST	Inert	•	—	•	—
2A	316 SST	316 SST	316L SST	Inert	•	—	•	—
2B	316 SST	316 SST	*Hastelloy C*	Inert	•	—	•	—
2D	316 SST	316 SST	Tantalum	Inert	•	—	•	—
3B	*Hastelloy C*	*Hastelloy C*	*Hastelloy C*	Inert	•	—	•	—
3D	*Hastelloy C*	*Hastelloy C*	Tantalum	Inert	•	—	•	—
4B	*Monel*	*Monel*	*Hastelloy C*	Inert	•	—	•	—
4C	*Monel*	*Monel*	*Monel*	Inert	•	—	•	—
4D	*Monel*	*Monel*	Tantalum	Inert	•	—	•	—
7B[3]	316 SST	*Hastelloy C*	*Hastelloy C*	Inert	•	—	•	—
8B[3]	Nickel-plated Carbon Steel	*Hastelloy C*	*Hastelloy C*	Inert	•	—	•	—

(1) Bolts and conduit plugs are plated carbon steel.
(2) On GP and AP transmitters, the low-side flange is plated carbon steel. For a stainless-steel low-side flange, order process connections Option Code D6.
(3) These selections meet NACE material recommendations per MR01-75.

TABLE 6-5. (continued).

Code	Mounting Brackets (optional – select one)	DP	HP	GP	AP
B1	Bracket, 2-in. Pipe Mount	•	•	•	•
B2	Bracket, Panel Mount	•	•	•	•
B3	Bracket, Flat, 2-in. Pipe Mount	•	•	•	•
B4	B1 Bracket with 316 SST Bolts	•	•	•	•
B5	B2 Bracket with 316 SST Bolts	•	•	•	•
B6	B3 Bracket with 316 SST Bolts	•	•	•	•
B7	316 SST B1 Bracket with 316 SST Bolts	•	•	•	•
B9	316 SST B3 Bracket with 316 SST Bolts	•	•	•	•

Code	Meters (optional – select one)	DP	HP	GP	AP
M1[1]	Analog Scale, Linear Meter, 0–100%	•	•	•	•
M2[2]	Analog Scale, Square Root Meter, 0–100% Flow	•	•	—	—
M3[1]	Analog Scale, Linear Meter, Special Scale	•	•	•	•
M4[3]	LCD Display, Linear Meter, 0–100% scale, User Selectable	•	•	•	•
M6[2]	Analog Scale, Square Root Meter, 0–10√	•	•	—	—
M7[3]	LCD Display, Linear Meter, Special Configuration	•	•	•	•
M8[2][3]	LCD Display Square Root Meter, 0–100% Flow	•	•	—	—
M9[2][3]	LCD Display, Square Root Meter, 0–10√	•	•	—	—

Code	Certifications (optional – select one)	DP	HP	GP	AP
	NOTE: FM explosion-proof approval is standard.				
I5[4]	Factory Mutual (FM) Non-incendive and Intrinsic Safety Approval	•	•	•	•
K5[4]	Combination of E5 and I5.	•	•	•	•
E6	Canadian Standards Association (CSA) Explosion-Proof Approval, 42.4 V dc max.	•	•	•	•
I6[4]	Canadian Standards Association (CSA)Intrinsic Safety Approval, 42.4 V dc max.	•	•	•	•
C6[4]	Combination of I6 and E6; CSA Explosion-Proof and Intrinsic Safety Approval (Requires 42.4 V dc max. power supply)	•	•	•	•
K6[4]	CSA/CENELEC Explosion-Proof and Intrinsic Safety Approval	•	•	•	•
E7	Standards Association of Australia (SAA) Flameproof Certification	•	•	•	•
I7[5]	Standards Association of Australia (SAA) Intrinsic Safety Certification	•	•	•	•
N7	Standards Association of Australia (SAA) Type N Certification	•	•	•	•
E8	CESI/CENELEC Flameproof Certification	•	•	•	•
I8[5]	CESI/CENELEC Intrinsic Safety Certification	•	•	•	•
I1[6]	BASEEFA/CENELEC Intrinsic Safety Certification	•	•	•	•
N1[7]	BASEEFA Type N Certification	•	•	•	•
IC[5]	Schweizerischer Elektrochnischer Verein (SEV) Intrinsic Safety Certification	•	•	•	•

Code	Housing (optional – select one)	DP	HP	GP	AP
H1	SST Non-wetted Parts on Transmitter without Meter	•	•	•	•
H2	SST Non-wetted Parts on Transmitter with Meter	•	•	•	•
H3	SST Housing, Covers, Conduit Plug, Lock-nut, Without Meter	•	•	•	•
H4	SST Housing, Covers, Conduit Plug, Lock-nut, With Meter	•	•	•	•
J1[8]	Aluminum Housing, JIS G ½ Female Electrical Connection	•	•	•	•

Code	Terminal Blocks (optional – select one)	DP	HP	GP	AP
T1[9]	Integral Transient Protection (Only Available with E Electronics)	•	•	•	•

Code	Bolts for Flanges and Adaptors (optional – select one)	DP	HP	GP	AP
L3	ASTM A193-B7 Flange and Adaptor Bolts	•	•	•	•
L4	316 SST Flange and Adaptor Bolts	•	•	•	•
L5	ASTM A193-B7M Flange and Adaptor Bolts	•	•	•	•

(1) Not available with Output Codes L or M, or Option Codes Zx, V2, or V3.
(2) Not available with Output Codes J, L, M, or Option Codes Zx, V2, or V3.
(3) Not available with Output Codes G, L, M, or Option Codes Zx, V2, or V3.
(4) Not available with Output Code G or option Zx.
(5) Not available with Output Codes G, J, L, M, S, or option Zx.
(6) Not available with Output Codes G, J, L, M, or option Zx.
(7) Not available with Output Codes G, L, M, or option Zx.
(8) Valid with E4 approval, JIS Explosion-Proof. No other approvals apply.
(9) Not available with I1.

TABLE 6-5. (continued).

Code	Process Connections (optional)[1]		DP	HP	GP	AP
D1	Side Drain/Vent, Top	316 SST	•	•	•	•
		Hastelloy	•	•	•	•
		Monel	•	•	•	•
D2	Side Drain/Vent, Bottom	316 SST	•	•	•	•
		Hastelloy	•	•	•	•
		Monel	•	•	•	•
D3	Process Adaptors Deleted	316 SST	•	•	•	•
		Hastelloy	•	•	•	•
		Monel	•	•	•	•
D9[2]	JIS Rc ¼ flanges and Rc ½ adapters	316 SST	•	•	•	•
		Hastelloy	•	•	•	•
		Monel	•	•	•	•
D6	316 SST Low Side Blank Flange		—	—	•	•
K1[3]	*Kynar* insert, ¼–18 NPT		•	—	•	•
K2[3]	*Kynar* insert, ½–14 NPT		•	—	•	•
S1[4]	Attachment of One Remote Seal - See PDS 00813-0100-4016 for Ordering Information		•	—	•	—
S2[4]	Attachment of Two Remote Seals - See PDS 00813-0100-4016 for Ordering Information		•	—	—	—
S4[5]	Attachment of Integral Orifice Assembly - See PDS 00813-0100-4686 for Ordering Information		•	•	—	—

Code	Wetted O-ring Material	DP	HP	GP	AP
W2	Buna-N	•	•	•	•
W3	Ethylene-Propylene	•	•	•	•
W4	*Aflas*	•	•	•	•
W6[6]	Spring-loaded *Teflon*	•	—	•	•

Code	Procedures	DP	HP	GP	AP
P1	Hydrostatic Testing, 150% Maximum Working Pressure (125% for GP 10)	•	•	•	•
P2	Cleaning for Special Service	•	•	•	—
P3[7]	Cleaning for < 1 PPM Chlorine/Fluorine	•	•	•	•
P4	Calibrate at Line Pressure	•	•	—	•
P5	Calibrate at Specific Temperature	•	•	•	•
P7[8]	Improved Temperature Coefficient	•	•	•	•
P8[9]	Calibrate to 0.1% Accuracy	•	•	•	—

Code	Outputs	DP	HP	GP	AP
V1	Reverse Output	—	—	•	—
V2[10]	4–20 mV Test Signal	•	•	•	•
V3[10]	20–100 mV Test Signal	•	•	•	•
Z1[11]	4-wire, 0–20 mA Output	•	•	•	•
Z2[11]	4-wire, 0–16 mA Output	•	•	•	•
Z3[11]	4 wire, 0–10 mA Output	•	•	•	•

Typical Model Number: 1151DP 4 S 62 B3 M1 -

(1) Allowable combinations are: D1-D3-D6, D2-D3-D6, and D6-S1.
(2) Valid with E4, JIS Explosion Proof approval when used in combination with J1. No other approvals apply.
(3) The Maximum working pressure on this option is 300 psig.
(4) This options may only be used on ranges 4 through 8.
(5) This option has a maximum static pressure rating of 3,000 psi, and is available for factory assembly only without associated piping and is available only for ranges 2, 3, 4, and 5.
(6) Contains a Hastelloy spring that is wetted by the process; consult factory for Teflon O-ring without a spring (ranges 3-8 only).
(7) Flourolube grease on wetted O-rings.
(8) Not available on range 10: limited to 1,500 psi on range 9.
(9) Available only with stainless steel isolators and for span of 10 inH_2O and greater; available only with Output Codes E, G, L, or M; not available on AP or DR transmitters.
(10) Not available with Output Codes L or M.
(11) Not available with Option Codes Mx, Vx, Ix, or Ex, or Output Codes G, L, M.

TABLE 6-6. Model 1151 Spare Parts List.

Electronics – One spare part recommended for every 25 transmitters.

Part Description	Item No.	Part Number
E Output Code, 4–20 mA dc		
Amplifier Circuit Board	4	01151-0137-0001
Calibration Circuit Board	6	01151-0139-0001
G Output Code, 10–50 mA dc		
Amplifier Circuit Board	4	01151-0597-0001
Calibration Circuit Board	6	01151-0139-0001
J Output Code, 4–20 mA dc, Square Root		
Amplifier Circuit Board	4	01151-0378-0001
Calibration Circuit Board	6	01151-0377-0001
L Output Code, 0.8–3.2 V, Low Power		
Amplifier Circuit Board	4	01151-0507-0001
Calibration Circuit Board	6	01151-0509-0001
M Output Code		
Amplifier Circuit Board	4	01151-0507-0002
Calibration Circuit Board	6	01151-0509-0002

Sensor Modules (Silicon Fill)–One spare part recommended for every 50 transmitters.

Part Description	Item No.	Part Number
Range 3 DP, GP (URL=30 inH_2O)	19	
316L SST		01151-0011-0032
Hastelloy C-276		01151-0011-0033
Monel		01151-0011-0034
Tantalum		01151-0011-0035
Gold-plated *Monel*		01151-0011-0036
Range 4 DP, GP (URL=150 inH_2O)	19	
316L SST		01151-0011-0042
Hastelloy C-276		01151-0011-0043
Monel		01151-0011-0044
Tantalum		01151-0011-0045
Gold-plated *Monel*		01151-0011-0046
Range 4 HP (URL=150 inH_2O)	19	
316L SST		01151-0112-0042
Hastelloy C-276		01151-0112-0043
Monel		01151-0112-0044
Range 4 AP (URL=11 inH_2A)	19	
316L SST		01151-0054-0042
Hastelloy C-276		01151-0054-0043
Monel		01151-0054-0044

(continued on next page)

TABLE 6-6. (continued).

Sensor Modules (Silicon Fill)–One spare part recommended for every 50 transmitters.		
Part Description	Item No.	Part Number
Range 5 DP, GP (URL=750 inH$_2$O)	19	
316L SST		01151-0011-0052
Hastelloy C-276		01151-0011-0053
Monel		01151-0011-0054
Tantalum		01151-0011-0055
Gold-plated *Monel*		01151-0011-0056
Range 5 HP (URL=750 inH$_2$O)	19	
316L SST		01151-0112-0052
Hastelloy C-276		01151-0112-0053
Monel		01151-0112-0054
Range 5 AP (URL=55 inH$_2$A)	19	
316L SST		01151-0054-0052
Hastelloy C-276		01151-0054-0053
Monel		01151-0054-0054
Range 6 DP (URL=100 psid)	19	
316L SST		01151-0041-0062
Hastelloy C-276		01151-0041-0063
Monel		01151-0041-0064
Tantalum		01151-0041-0065
Gold-plated *Monel*		01151-0041-0066
Range 6 GP (URL=100 psig)	19	
316L SST		01151-0041-0162
Hastelloy C-276		01151-0041-0163
Monel		01151-0041-0164
Tantalum		01151-0041-0165
Gold-plated *Monel*		01151-0041-0166
Range 6 HP (URL=100 psid)	19	
316L SST		01151-0112-0062
Hastelloy C-276		01151-0112-0063
Monel		01151-0112-0064
Range 6 AP (URL=100 psia)	19	
316L SST		01151-0054-0062
Hastelloy C-276		01151-0054-0063
Monel		01151-0054-0064
Range 7 DP (URL=300 psid)	19	
316L SST		01151-0041-0072
Hastelloy C-276		01151-0041-0073
Monel		01151-0041-0074
Tantalum		01151-0041-0075
Gold-plated *Monel*		01151-0041-0076
Range 7 GP (URL=300 psig)	19	
316L SST		01151-0041-0172
Hastelloy C-276		01151-0041-0173
Monel		01151-0041-0174
Tantalum		01151-0041-0175
Gold-plated *Monel*		01151-0041-0176

(continued on next page)

TABLE 6-6. (continued).

Sensor Modules (Silicon Fill) (continued) –One spare part recommended for every 50 transmitters.		
Part Description	Item No.	Part Number
Range 7 HP (URL=300 psid)	19	
316L SST		01151-0112-0072
Hastelloy C-276		01151-0112-0073
Monel		01151-0112-0074
Range 7 AP (URL=300 psia)	19	
316L SST		01151-0054-0072
Hastelloy C-276		01151-0054-0073
Monel		01151-0054-0074
Range 8 DP (URL=1,000 psid)	19	
316L SST		01151-0041-0082
Hastelloy C-276		01151-0041-0083
Monel		01151-0041-0084
Tantalum		01151-0041-0085
Gold-plated *Monel*		01151-0041-0086
Range 8 GP (URL=1,000 psig)	19	
316L SST		01151-0041-0182
Hastelloy C-276		01151-0041-0183
Monel		01151-0041-0184
Tantalum		01151-0041-0185
Gold-plated *Monel*		01151-0041-0186
Range 8 AP (URL=1,000 psia)	19	
316L SST		01151-0054-0082
Hastelloy C-276		01151-0054-0083
Monel		01151-0054-0084
Range 9 GP (URL=3,000 psig)	19	
316L SST		01151-0112-0192
Hastelloy C-276		01151-0112-0193
Monel		01151-0112-0194
Range 10 GP (URL=6,000 psig)	19	
316L SST		01151-0112-0002
Hastelloy C-276		01151-0112-0003
Monel		01151-0112-0004

(continued on next page)

TABLE 6-6. (continued).

Sensor Modules (Inert Fill)–One spare part recommended for every 50 transmitters.		
Part Description	Item No.	Part Number
Range 3 DP, GP (URL=30 inH$_2$O)	19	
316L SST		01151-0230-0032
Hastelloy C-276		01151-0230-0033
Monel		01151-0230-0034
Tantalum		01151-0230-0035
Gold-plated *Monel*		01151-0230-0036
Range 4 DP, GP (URL=150 inH$_2$O)	19	
316L SST		01151-0230-0042
Hastelloy C-276		01151-0230-0043
Monel		01151-0230-0044
Tantalum		01151-0230-0045
Gold-plated *Monel*		01151-0230-0046
Range 5 DP, GP (URL=750 inH$_2$O)	19	
316L SST		01151-0230-0052
Hastelloy C-276		01151-0230-0053
Monel		01151-0230-0054
Tantalum		01151-0230-0055
Gold-plated *Monel*		01151-0230-0056
Range 6 DP (URL=100 psid)	19	
316L SST		01151-0230-0062
Hastelloy C-276		01151-0230-0063
Monel		01151-0230-0064
Tantalum		01151-0230-0065
Range 6 GP (URL=100 psig)	19	
316L SST		01151-0230-0162
Hastelloy C-276		01151-0230-0163
Monel		01151-0230-0164
Tantalum		01151-0230-0165
Range 7 DP (URL=300 psid)	19	
316L SST		01151-0230-0072
Hastelloy C-276		01151-0230-0073
Monel		01151-0230-0074
Tantalum		01151-0230-0075
Range 7 GP (URL=300 psig)	19	
316L SST		01151-0230-0172
Hastelloy C-276		01151-0230-0173
Monel		01151-0230-0174
Tantalum		01151-0230-0175
Range 8 DP (URL=1,000 psid)	19	
316L SST		01151-0230-0082
Hastelloy C-276		01151-0230-0083
Monel		01151-0230-0084
Tantalum		01151-0230-0085
Range 8 GP (URL=1,000 psig)	19	
316L SST		01151-0230-0182
Hastelloy C-276		01151-0230-0183
Monel		01151-0230-0184
Tantalum		01151-0230-0185

(continued on next page)

TABLE 6-6. (continued).

Housings, Covers, Flanges, And Valves – One spare part recommended for every 25 transmitters.		
Part Description	Item No.	Part Number
Electronics Housing	7	01151-0060-0007
Electronics Cover	1	01151-1045-0001
Process Flange	17	
Nickel-plated Carbon Steel		01151-0236-0005
Plated Carbon Steel		01151-0236-0001
316 SST		01151-0213-0002
Hastelloy C-276		01151-0213-0004
Monel		01151-0213-0003
Process Flange for Side Drain/Vent Valve		
Nickel-plated Carbon Steel		01151-0236-0015
Plated Carbon Steel		01151-0236-0011
316 SST		01151-0213-0012
Hastelloy C-276		01151-0213-0014
Monel		01151-0213-0013
Blank Flange	23	
Plated Carbon Steel		90043-0046-0001
Flange Adapter	21	
Nickel-plated Carbon Steel		90001-0033-0004
Plated Carbon Steel		90001-0033-0001
316 SST		01151-0211-0002
Hastelloy C-276		01151-0211-0004
Monel		01151-0211-0003
DP and HP Valve Stem and Seat, 316 SST[1]	14,15	01151-0028-0022
GP and AP Valve Stem and Seat, 316 SST[1]	14,15	01151-0028-0012
DP and HP Valve Stem and Seat, 316 SST, Hastelloy C[1]	14,15	01151-0028-0023
GP and AP Valve Stem and Seat, 316 SST, *Hastelloy C*[1]	14,15	01151-0028-0013
DP and HP Valve Stem and Seat, 316 SST, *Monel*[1]	14,15	01151-0028-0024
GP and AP Valve Stem and Seat, 316 SST, *Monel*[1]	14,15	01151-0028-0014
Plug, 316 SST (used with side drain/vent)		C50246-0002
Plug, *Hastelloy C* (used with side drain/vent)		C50246-0202
Plug, *Monel* (used with side drain/vent)		C50246-0102

Hardware–One spare part recommended for every 50 transmitters.		
Part Description	Item No.	Part Number
Adjustment Kit		01151-0029-0001
Adjustment Screw	10	
O-ring for Adjustment Screw	11	
Retaining Ring	12	
O-ring for Adjustment Screw (pkg of 12)	11	01151-0032-0001
O-ring for Electronics Cover (pkg of 12)	2	01151-0033-0003
O-ring for Process Flange, *Viton* (pkg of 12)	18	01151-0034-0020
O-ring for Process Flange, *Viton* and Backup Ring (pkg of 4)	18	01151-0034-0014
O-ring for Process Flange, Buna-N (pkg of 12)	18	01151-0034-0002
O-ring for Process Flange, Buna-N and Backup Ring (pkg of 4)	18	01151-0034-0016
O-ring for Process Flange, Ethylene-propylene (pkg of 12)	18	01151-0034-0004
O-ring for Process Flange, Ethylene-propylene and Backup Ring (pkg of 4)	18	01151-0034-0015
O-ring for Process Flange, *Aflas* (pkg of 4)[2]	18	01151-0034-0019
O-ring for Flange Adapter, *Viton* (pkg of 12)	20	01151-0035-0009

(continued on next page)

(1) Package contains quantity required for one transmitter.
(2) Kit contains enough parts for two differential or four gage/absolute transmitters. Backup rings are included.

TABLE 6-6. (continued).

Hardware (continued)–One spare part recommended for every 50 transmitters.		
Part Description	Item No.	Part Number
O-ring for Flange Adapter, Buna-N (pkg of 12)	20	01151-0035-0002
O-ring for Flange Adapter, Ethylene-propylene (pkg of 12)	20	01151-0035-0004
O-ring for Flange Adapter, *Aflas* (pkg of 12)(1)	20	01151-0035-0008
O-ring for Flange Adapter, *Teflon* with *Hastelloy C* Spring (pkg of 4)	20	01151-0034-0021
Electronics Assembly Hardware(2)		01151-0030-0001
Standoff	8	
Standoff	5	
Screw	9	
Screw	3	
Locknut		
DP and HP Flange Kits, Carbon Steel(1)		01151-0031-0001
Bolt for Flange Adapter	22	(DP & HP Ranges 3–7) or
Bolt for Process Flange	13	01151-0031-0034
Nut for Process Flange	16	(DP Range 8)
GP and AP Flange Kits, Carbon Steel(1)		01151-0031-0002
Bolt for Flange Adapter, Carbon Steel	22	(AP Ranges 4–7,
Bolt for Process Flange, Carbon Steel	13	GP Ranges 3–7)
Nut for Process Flange, Carbon Steel	16	or
		01151-0031-0035
		(AP & GP Range 8)
		or
		01151-0031-0003 (GP Range 9)
		or
		01151-0031-0019
		(GP Range 0)
DP and HP Flange Kits, 316 SST(1)		01151-0031-0023
Bolt for Flange Adapter	22	(DP & HP Ranges 3–7) or
Bolt for Process Flange	13	01151-0031-0038
Nut for Process Flange	16	(DP Range 8)
GP and AP Flange Kits, 316 SST(1)		01151-0031-0024
Bolt for Flange Adapter, 316 SST	22	(AP Ranges 4–7,
Bolt for Process Flange, 316 SST	13	GP Ranges 3–7)
Nut for Process Flange, 316 SST	16	or
		01151-0031-0039
		(AP & GP Range 8)
		or
		01151-0031-0025 (GP Range 9)
		or
		01151-0031-0026
		(GP Range 0)
DP and HP Flange Kits, ANSI 193-B7(1)		01151-0031-0012
Bolt for Flange Adapter	22	(DP & HP Ranges 3–7) or
Bolt for Process Flange	13	01151-0031-0036
Nut for Process Flange	16	(DP Range 8)
GP and AP Flange Kits, ANSI 193-B7(1)		01151-0031-0013
Bolt for Flange Adapter, ANSI 193-B7	22	(AP Ranges 4–7,
Bolt for Process Flange, ANSI 193-B7	13	GP Ranges 3–7)
Nut for Process Flange, ANSI 193-B7	16	or
		01151-0031-0037
		(AP & GP Range 8)
		or
		01151-0031-0014 (GP Range 9)
		or
		01151-0031-0022
		(GP Range 0)

(continued on next page)

(1) Part number is for package of 12 O-rings–only two required per transmitter.
(2) Package contains quantity required for one transmitter.

TABLE 6-6. (continued).

Indicating Meters		
Part Description	Item No.	Part Number
Analog Meter Kit, 4–20 mA dc, Linear Scale(1)		01151-1046-0007
Analog Meter Kit, 4–20 mA dc, Square Root, 0-100% Flow		01151-1046-0009
Analog Meter Kit, 10–50 mA dc, Linear Scale(1)		01151-1046-0011
Analog Meter Kit, 10–50 mA dc, Square Root, 0–100% Flow		01151-1046-0013
I.S. Approved Analog Meter Kit, 4–20 mA dc, Linear Scale(1)		01151-2615-0007
I.S. Approved Analog Meter Kit, 4–20 mA dc, Square Root, 0-100% Flow		01151-2615-0009
I.S. Approved Analog Meter Kit, 10–50 mA dc, Linear Scale(1)		01151-2615-0011
I.S. Approved Analog Meter Kit, 10–50 mA dc, Square Root, 0–100% Flow		01151-2615-0013
LCD Meter Kit, Linear, 0–100% Flow		01151-1046-0019
LCD Meter Kit, Square Root, 0–100% Flow		01151-1046-0021
Analog Meter, 4–20 mA dc, Linear Scale		01151-0687-0004
Analog Meter, 4–20 mA dc, Square Root, 0–100% Flow		01151-0687-0005
Analog Meter, 4–20 mA dc, Square Root, 0–10 √		01151-0687-0006
Analog Meter, 10–50 mA dc, Linear Scale		01151-0687-0006
Analog Meter, 10–50 mA dc, Square Root, 0–100% Flow		01151-0687-0007
Analog Meter, 10–50 mA dc, Square Root, 0–10 √		01151-0687-0009
I.S. Approved Analog Meter, 4–20 mA dc, Linear Scale		01151-2614-0004
I.S. Approved Analog Meter, 4–20 mA dc, Square Root, 0–100% Flow		01151-2614-0005
I.S. Approved Analog Meter, 4–20 mA dc, Square Root, 0–10 √		01151-2614-0008
I.S. Approved Analog Meter, 10–50 mA dc, Linear Scale		01151-2614-0006
I.S. Approved Analog Meter, 10–50 mA dc, Square Root, 0–100% Flow		01151-2614-0007
I.S. Approved Analog Meter, 10–50 mA dc, Square Root, 0–10 √		01151-2614-0009
Special Scale for Analog Meter		See note (1) below
LCD Meter, Linear, 0–100%		01151-1300-1000
LCD Meter, Square Root, 0–100% Flow		01151-1300-1001
LCD Meter, Special Configuration(2)		01151-1300-1000
LCD Meter Engineering Unit Labels		01151-1351-1001
Mounting Hardware and Cover Assembly Kit		01151-1046-0005
Mounting Hardware Kit		01151-1046-0006
Cover Assembly Kit		01151-1047-0001
O-ring for Cover (pkg of 12)		01151-0033-0003

Mounting Brackets		
Part Description	Item No.	Part Number
B1—Right-angle Bracket for 2-in. Pipe Mounting		01151-0036-0001
B2—Right-angle Bracket for Panel Mounting		01151-0036-0004
B3—Flat Bracket for 2-in. Pipe Mounting		01151-0036-0005
B4—Bracket for 2-in. Pipe with Series 300 SST Bolts		01151-0036-0003
B5—Bracket for Panel with Series 300 SST Bolts		01151-0036-0006
B6—Flat Bracket for 2-in. Pipe with Series 300 SST Bolts		01151-0036-0007
B7—316 SST B1 Bracket with 316 SST Bolts		01151-0036-0021
B9—316 SST B3 Bracket with 316 SST Bolts		01151-0036-0022

(1) Meter kit includes meter, mounting hardware, and cover assembly. For meters with special scaling, order the appropriate meter and specify the scale desired. Mounting hardware and cover assembly must be ordered separately.
(2) To order a meter with a special configuration, order the appropriate meter and indicate configuration desired. To order a special configuration LCD meter kit, order the meter, and the mounting hardware and cover assembly kit separately.

FIGURE 6-3. Model 1151 Analog Pressure Transmitter Exploded View with Item Numbers.

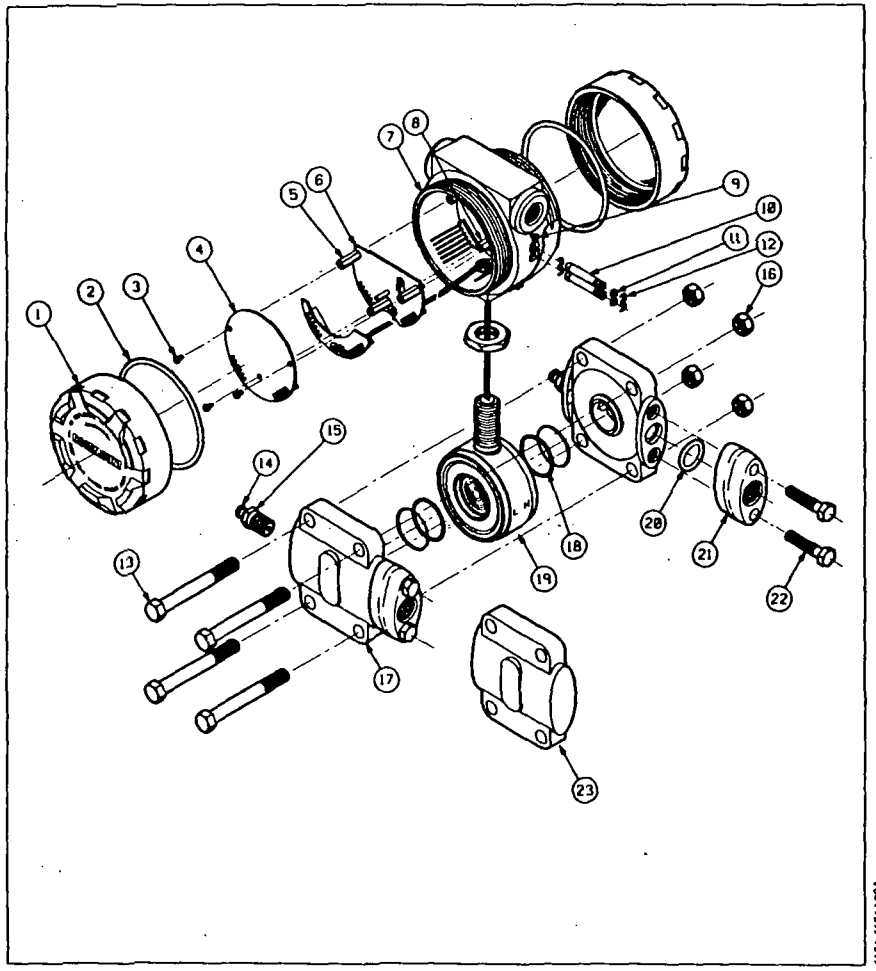

Appendix A Approval Drawings

Rosemount Drawing 01151-0214, Rev. V, 6 Sheets:
Index of Intrinsically Safe Barrier Systems and Entity Parameters for 444, 1135, 1144, 1151, and 2051 Transmitters and 751 Field Indicators.

Rosemount Drawing 01151-2575, Rev. C, 3 Sheets:
Index of CSA Intrinsically Safe Barrier Systems for Model 1151 Transmitters.

Rosemount Drawing 01151-2576, Rev. C, 2 Sheets:
Entity Drawing: 1151 SAA Intrinsic Safety Configuration.

REVISIONS					
LTR	DESCRIPTION	ECO NO	REV BY	APPR	DATE
P	Change entity parameters (Fm on re-exam) correct 444 CI	637376	WCR	WCR	9/28/90
R	Add 1151 Low Power Barrier System, Model 751 LI to 0	638105		WCR	11/27/90
T	1135, 1144, 1151 Li TO Ø	639039	SVC	WCR	1/23/91
U	1151 Li TO 20; Ci .01 AND .034	651426	SVC	[illegible]	12/11/92
V	751 Li TO Ø	662242		GSE	11/17/94

CONTENTS	
ENTITY APPROVALS	SHEETS 2 THRU 4
APPROVED PARAMETERS	SHEETS 2 THRU 3
CONNECTION DIAGRAMS	SHEET 4

MASTER

APPROVED SOURCES OF SUPPLY	
MFG	MFG PART NO

Material purchased to this Rosemount Specification Control Drawing shall be required to meet all the specifications of this drawing. Any mention of manufacturer's part number within this drawing is for reference only. This is necessary to ensure design control of Rosemount's end product. It is Rosemount's intent to purchase your standard material whenever possible.

SPECIFICATION CONTROL DRAWING

UNLESS OTHERWISE SPECIFIED, DIMENSIONS ARE IN INCHES.

TOLERANCES:

DECIMALS	FRACTIONS
.X ± .1	±1/32
.XX ± .02	ANGLES
.XXX ± .010	±2°

		DATE
PREPARED BY:	Nancy Nix	9/28/90
CHECKED BY:	WCR	
APPROVED BY Q.C.		
APPROVED BY ENG.	W C Ramt	9/28/90
APPROVED BY PURCH.		
FINAL APPROVAL ES		

ROSEMOUNT® Measurement Control Analytical Valves

TITLE
INDEX OF INTRINSICALLY SAFE BARRIER SYSTEMS & ENTITY PARAMETERS FOR 444, 1135, 1144, 1151, & 2051 TRANSMITTERS AND 751 FIELD INDICATORS

SIZE	CODE IDENT NO	DRAWING NO
A	04274	01151-0214

SCALE None | U/M: Each | SHEET 1 OF 6

ENTITY CONCEPT APPROVALS

The entity concept allows interconnection of intrinsically safe apparatus to associated apparatus not specifically examined in combination as a system. The approved values of maximum open circuit voltage (V_{OC} or V_T) and maximum short circuit current (I_{SC} or I_T) for the associated apparatus must be less than or equal to the maximum safe input voltage (V_{MAX}) and input current (I_{MAX}) of the intrinsically safe apparatus. In addition, the approved maximum allowable connected capacitance (C_A) and inductance (L_A) of the associated apparatus must be greater than the maximum unprotected internal capacitance (C_I) and inductance (L_I) of the intrinsically safe apparatus. The approved entity concept parameters are as follows:

Model 444

Class I, Div. 1, Groups A and B

V_{MAX} = 40V	V_{OC} or V_T is less than or equal to 40V
I_{MAX} = 165 mA	I_{SC} or I_T is less than or equal to 165 mA
C_I = 0.044μF	C_A is greater than 0.044IF
L_I = 0	L_A is greater than 0

Class I, Div. 1, Groups C and D

V_{MAX} = 40V	V_{OC} or V_T is less than or equal to 40V
I_{MAX} = 225 mA	I_{SC} or I_T is less than or equal to 225 mA
C_I = 0.044μF	C_A is greater than 0.044IF
L_I = 0	L_A is greater than 0

Model 751

Class I, Div. 1, Groups A and B

V_{MAX} = 40V	V_{OC} or V_T is less than or equal to 40V
I_{MAX} = 165 mA	I_{SC} or I_T is less than or equal to 165 mA
C_I = 0	C_A is greater than 0
L_I = 0	L_A is greater than 0

Class I, Div. 1, Groups C and D

V_{MAX} = 40V	V_{OC} or V_T is less than or equal to 40V
I_{MAX} = 225 mA	I_{SC} or I_T is less than or equal to 225 mA
C_I = 0	C_A is greater than 0
L_I = 0	L_A is greater than 0

MASTER

Rosemount Inc.
MINNEAPOLIS, MINNESOTA

DR.		SIZE A	FSCM. NO.	DRAWING NO. 01151-0214
ISSUE		SCALE: NONE	WT.	SHEET 2 OF 6

MASTER

Model and 1151

Class I, Div. 1, Groups A and B

V_{MAX} = 40V	V_{OC} or V_T is less than or equal to 40V
I_{MAX} = 165 mA	I_{SC} or I_T is less than or equal to 165 mA
C_I(1151 Std) = 0	C_A is greater than 0
C_I(Smart 1151) = 0.024μF	C_A is greater than 0.024μF
C_I(1151 Std w/R Option) = 0.010μF	C_A is greater than 0.010μF
C_I(1151 Smart w/R_Option) = 0.034μF	C_A is greater than 0.034μF
L_I(1151 Std) = 0	L_A is greater than 0
L_I(1151 w/R_ Option) = 20μH	L_A is greater than 20μH

Class I, Div. 1, Groups C and D

V_{MAX} = 40V	V_{OC} or V_T is less than or equal to 40V
I_{MAX} = 225 mA	I_{SC} or I_T is less than or equal to 225 mA
C_I(1151 Std) = 0	C_A is greater than 0
C_I(Smart 1151) = 0.024μF	C_A is greater than 0.024μF
C_I(1151 Std w/R Option) = 0.010μF	C_A is greater than 0.010μF
C_I(1151 Smart w/R_Option) = 0.034μF	C_A is greater than 0.034μF
L_I(1151 Std) = 0	L_A is greater than 0
L_I(1151 w/R_ Option) = 20μH	L_A is greater than 20μH

Model 2051

Class I, Div. 1, Groups A and B

V_{MAX} = 40V	V_{OC} or V_T is less than or equal to 40V
I_{MAX} = 165 mA	I_{SC} or I_T is less than or equal to 165 mA
C_I = 0.012μF	C_A is greater than 0.012lF
L_I = 480μH	L_A is greater than 480lH

Class I, Div. 1, Groups C and D

V_{MAX} = 40V	V_{OC} or V_T is less than or equal to 40V
I_{MAX} = 225 mA	I_{SC} or I_T is less than or equal to 225 mA
C_I = 0.012μF	C_A is greater than 0.012lF
L_I = 480μH	L_A is greater than 480lH

Rosemount Inc. MINNEAPOLIS, MINNESOTA				
DR.		SIZE A	FSCM NO.	DRAWING NO. 01151-0214
ISSUE		SCALE: NONE	WT.	SHEET 3 OF 6

Model 1135

Class I, Div. 1, Groups A and B

V_{MAX} = 40V	V_{OC} or V_T is less than or equal to 40V
I_{MAX} = 165 mA	I_{SC} or I_T is less than or equal to 165 mA
C_I = 0.008μF	C_A is greater than 0.008lF
L_I = 0	L_A is greater than 0

Class I, Div. 1, Groups C and D

V_{MAX} = 40V	V_{OC} or V_T is less than or equal to 40V
I_{MAX} = 225 mA	I_{SC} or I_T is less than or equal to 225 mA
C_I = 0.008μF	C_A is greater than 0.008lF
L_I = 0	L_A is greater than 0

Model 1144

Class I, Div. 1, Groups A and B

V_{MAX} = 40V	V_{OC} or V_T is less than or equal to 40V
I_{MAX} = 165 mA	I_{SC} or I_T is less than or equal to 165 mA
C_I = 0	C_A is greater than 0
L_I = 0	L_A is greater than 0

Class I, Div. 1, Groups C and D

V_{MAX} = 40V	V_{OC} or V_T is less than or equal to 40V
I_{MAX} = 225 mA	I_{SC} or I_T is less than or equal to 225 mA
C_I = 0	C_A is greater than 0
L_I = 0	L_A is greater than 0

MASTER

Rosemount Inc. MINNEAPOLIS, MINNESOTA				
DR.		SIZE A	FSCM NO.	DRAWING NO. 01151-0214
ISSUE		SCALE: NONE	WT.	SHEET 4 OF 6

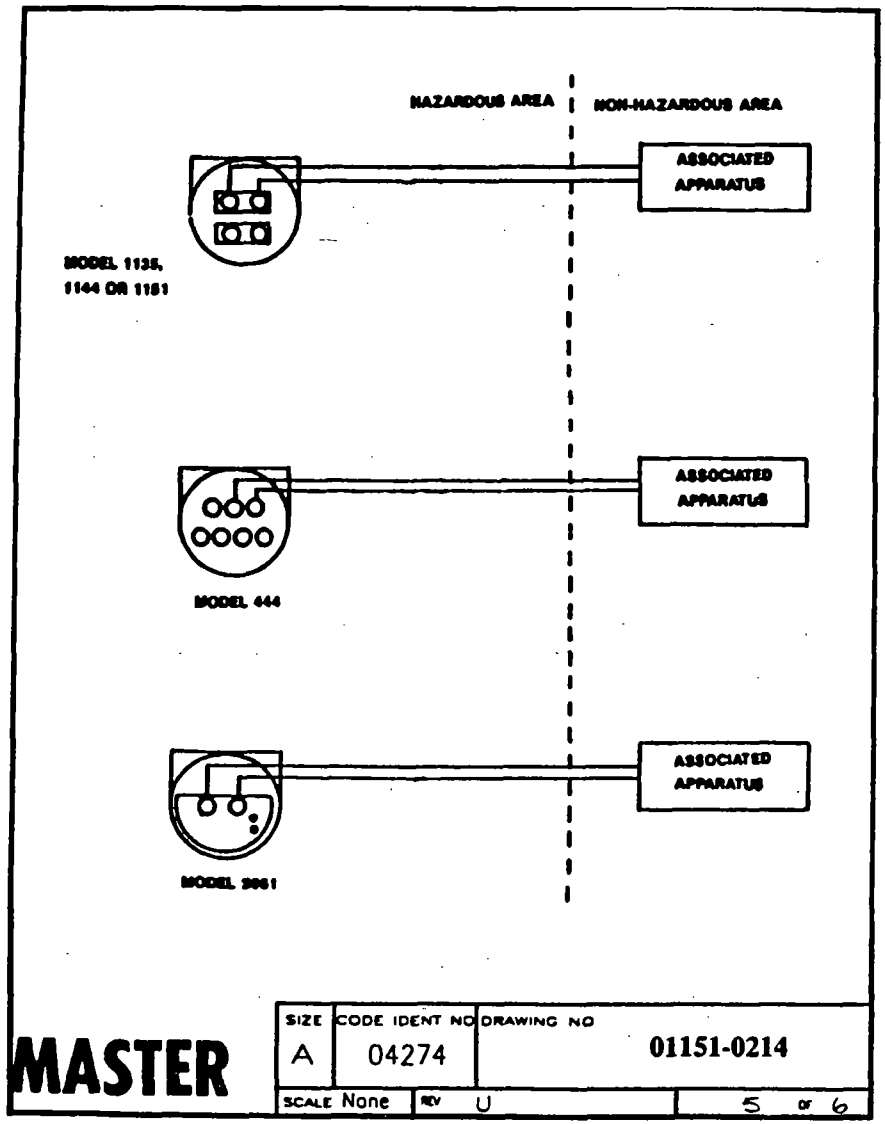

MASTER

SIZE	CODE IDENT NO	DRAWING NO
A	04274	01151-0214
SCALE None	REV U	5 of 6

1151 --- L & M CIRCUIT CONNECTION WITH INTRINSIC SAFETY BARRIERS

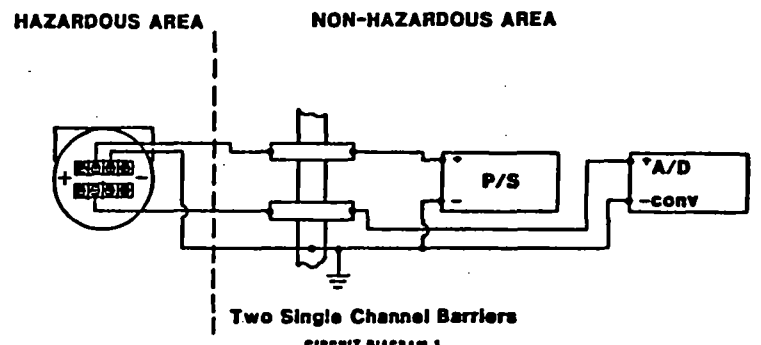

Two Single Channel Barriers

CIRCUIT DIAGRAM 1

(ONLY FOR USE WITH BARRIERS APPROVED IN THIS CONFIGURATION)

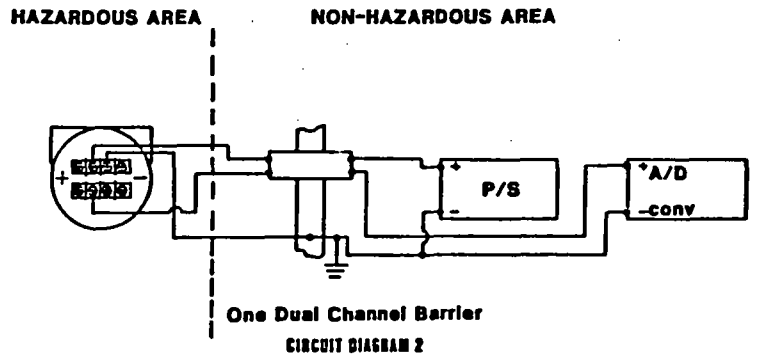

One Dual Channel Barrier

CIRCUIT DIAGRAM 2

MASTER

SIZE	CODE IDENT NO	DRAWING NO
A	04274	01151-0214
SCALE NONE	REV U	6 OF 6

PROPRIETARY INFORMATION IS CONTAINED HEREIN AND MUST BE HANDLED ACCORDINGLY
BY _____ DATE _____

REVISIONS				
REV	DESCRIPTION	CHG. NO.	APP'D	DATE
A	NEW RELEASE	646666	W.C.R.	04/01/92
B	150 ohms was 120 ohms	650816	J.J.B.	11/13/92
C	150 ohms was 120 ohms (SHT 3)	652195	J.J.B.	1/29/93

CSA INTRINSICALLY SAFE APPROVAL

Exia
Intrinsically Safe /Securite Intrinseque

THE ROSEMOUNT MODEL 1151 PRESSURE TRANSMITTER IS APPROVED BY CSA AS INTRINSICALLY SAFE FOR THE CLASS I, DIVISION 1 GROUPS AS INDICATED WHEN USED WITH THE BARRIERS AND CONVERTERS LISTED BELOW AND CONNECTED AS SHOWN IN THE ACCOMPANYING DIAGRAMS.

DEVICE	PARAMETERS	APPROVED FOR CLASS I, DIV. 1
CSA Approved Safety Barrier	30 V or less, 330 ohms or more 28 V or less, 300 ohms or more 22 V or less, 180 ohms or more	Groups A, B, C, D
Foxboro Converter 2AS-I2B-CGB, 3A0-I3A CS-E /CGB-A, 2AI-I3V-CGB, 3A2-I3D CS-E /CGB-A, 2AI-I2V-CGB, 3A2-I2D CS-E /CGB-A, 2AS-I2I-CGB, 3A4-I2DA CS-E /CGB-A, 3F4-I2DAI CS-E /CGB-A		Groups B, C, D
CSA Approved Safety Barrier	30 V or less, 150 ohms or more	Groups C, D

THIS DRAWING WAS CREATED ON CAD. DRAWING IS ARCHIVED ON MAGNETIC TAPE FOR ECO CHANGES.

UNLESS OTHERWISE SPECIFIED DIMENSIONS IN INCHES. REMOVE ALL BURRS AND SHARP EDGES. MACHINE SURFACE FINISH 125
TOLERANCES
DECIMALS .X: ±.1 .XX: ±.02 .XXX: ±.010
FRACTIONS ±1/32
ANGLES ±2°
DO NOT SCALE PRINT

CONTRACT NO.
DR. S.CAPAUL 03/18/92
CHK'D W.C.RAUTH 04/01/92
APP'D. W.C.RAUTH 04/01/92
APP'D. GOVT.

ROSEMOUNT® Measurement Control Analytical Valves
Rosemount Inc. 12001 Technology Drive Eden Prairie, MN 55344 USA

TITLE INDEX OF CSA INTRINSICALLY SAFE BARRIER SYSTEMS FOR MODEL 1151 TRANSMITTERS

SIZE A | FSCM NO | DWG NO. 01151-2575
SCALE N/A | WT. ——— | SHEET 1 OF 3

FORM NO. 6065A-1REV. C

REVISIONS				
REV	DESCRIPTION	CHG. NO.	APP'D	DATE
C		652195		

MODEL 1151 CIRCUIT CONNECTION WITH BARRIER OR CONVERTER

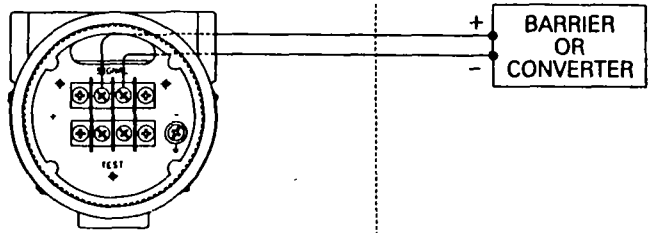

HAZARDOUS AREA | NON-HAZARDOUS AREA

MODEL 1151_ _ _L, M CIRCUIT CONNECTION WITH BARRIER(S)

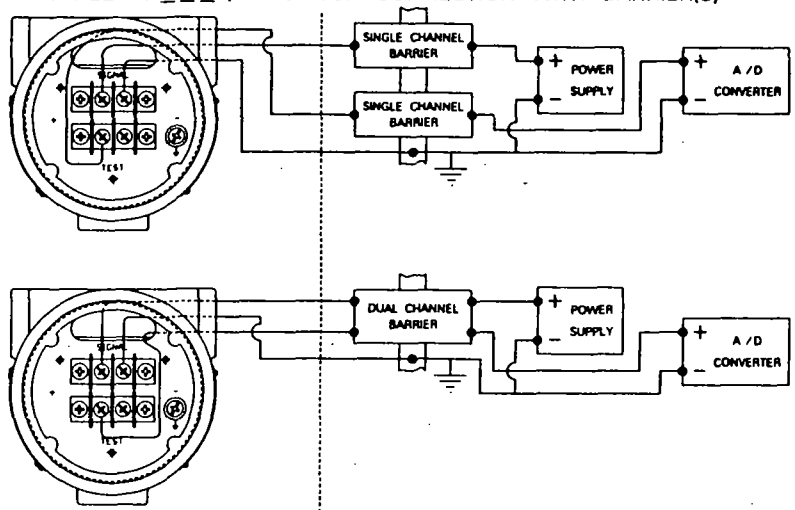

HAZARDOUS AREA | NON-HAZARDOUS AREA

Rosemount Inc.
12001 Technology Drive
Eden Prairie, MN 55344 USA

THIS DRAWING WAS CREATED ON CAD. DRAWING IS ARCHIVED ON MAGNETIC TAPE FOR ECO CHANGES.

DR. S.CAPAUL 03/18/92
ISSUED

SIZE A | FSCM NO | DWG NO. 01151-2575
SCALE NONE | WT. ——— | SHEET 2 OF 3

FORM NO. 6065A-1REV. C

REVISIONS				
REV	DESCRIPTION	CHG. NO.	APP'D	DATE
C		652195		

MODEL 1151___L, M CIRCUIT CONNECTION WITH BARRIER(S) (CONTINUED)

APPROVED FOR CLASS I, DIVISION 1, GROUPS A, B, C, D WHEN USED IN CIRCUIT WITH TWO CSA APPROVED SINGLE CHANNEL SAFETY BARRIERS; ONE WITH APPROVED SAFETY PARAMETERS OF 28 VOLTS OR LESS AND 300 OHMS OR MORE IN +POWER LINE, AND THE OTHER WITH APPROVED SAFETY PARAMETERS OF 10 VOLTS OR LESS AND 47 OHMS OR MORE IN +OUTPUT LINE.

-OR-

ONE CSA APPROVED DUAL CHANNEL SAFETY BARRIER WITH IDENTICAL APPROVED SAFETY PARAMETERS CONNECTED IN LIKE MANNER.

APPROVED FOR CLASS I, DIVISION 1, GROUPS C, D WHEN USED IN CIRCUIT WITH TWO CSA APPROVED SINGLE CHANNEL SAFETY BARRIERS; ONE WITH APPROVED SAFETY PARAMETERS OF 30 VOLTS OR LESS AND 150 OHMS OR MORE IN +POWER LINE AND THE OTHER WITH APPROVED SAFETY PARAMETERS OF 10 VOLTS OR LESS AND 47 OHMS OR MORE IN +OUTPUT LINE.

Rosemount Inc. 12001 Technology Drive Eden Prairie, MN 55344 USA	THIS DRAWING WAS CREATED ON CAD. DRAWING IS ARCHIVED ON MAGNETIC TAPE FOR ECO CHANGES.		
DR. S.CAPAUL 03/30/92	SIZE A	FSCM NO	DWG NO. 01151-2575
ISSUED	SCALE N/A	WT.	SHEET 3 OF 3

FORM NO. 60654-1 REV. C

PROPRIETARY INFORMATION IS CONTAINED HEREIN AND MUST BE HANDLED ACCORDINGLY BY ____ DATE ____

REVISIONS				
REV	DESCRIPTION	CHG. NO.	APP'D	DATE
C	REVISE ENTITY PARAMETERS, ADD LOW POWER (PAGE 2)	655715	JJB	6/4/92

SAA ENTITY CONCEPT APPROVALS

THE ROSEMOUNT 1151 PRESSURE TRANSMITTER IS SAA APPROVED AS INTRINSICALLY SAFE WHEN USED IN THE CIRCUIT WITH SAA APPROVED BARRIERS WHICH MEET THE ENTITY PARAMETERS INDICATED BELOW.

ENTITY PARAMETER FOR 1151 ANALOG & SMART ELECTRONICS Ex ia IIC T6 (Tamb=40°C) (CLASS I, ZONE 0):
Ex ia IIC T5 (Tamb=70°C)

APPARATUS PARAMETER	BARRIER PARAMETER
Ui = 30V Ii = 200mA Pi = 1.0W	Uo MUST BE LESS THAN OR EQUAL TO 30V Io MUST BE LESS THAN OR EQUAL TO 200mA $\frac{Uo * Io}{4}$ MUST BE LESS THAN OR EQUAL TO 1.0W
Ci = 0.024 μF Li = 20 μH	Co MUST BE GREATER THAN (C_{cable} + Ci) and Lo MUST BE GREATER THAN L_{cable} or L/R RATIO IS GREATER THAN L/R OF CABLE

THE ENTITY CONCEPT ALLOWS INTERCONNECTION OF INTRINSICALLY SAFE APPARATUS NOT SPECIFICALLY EXAMINED IN COMBINATION AS A SYSTEM. REFER TO AS 2380.7 FOR DETERMINATION OF EXTERNAL CIRCUIT PARAMETERS AND INSTALLATION RULES FOR INTRINSICALLY SAFE CIRCUITS.

TO ASSURE AN INTRINSICALLY SAFE SYSTEM THE TRANSMITTER AND BARRIER MUST BE WIRED IN ACCORDANCE WITH THE BARRIER MANUFACTURERS FIELD WIRING INSTRUCTIONS AND THE CIRCUIT DIAGRAM SHOWN BELOW.

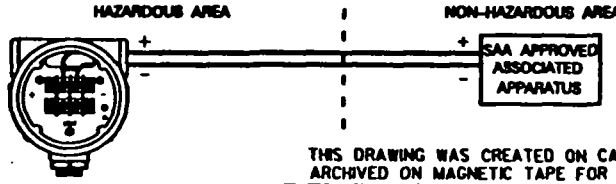

THIS DRAWING WAS CREATED ON CAD. DRAWING IS ARCHIVED ON MAGNETIC TAPE FOR ECO CHANGES.

UNLESS OTHERWISE SPECIFIED DIMENSIONS IN INCHES. REMOVE ALL BURRS AND SHARP EDGES. MACHINE SURFACE FINISH 125 - TOLERANCES - DECIMALS .x±.1 .xx±.02 .xxx±.010 FRACTIONS ±1/32 ANGLES ±2° DO NOT SCALE PRINT	CONTRACT NO.	ROSEMOUNT® Measurement Control Analysis Valves — Rosemount Inc. 12001 Technology Drive Eden Prairie, MN 55344 USA	
	DR. S.MILDENTZ 6/4/92	TITLE ENTITY DRAWING: 1151 SAA INTRINSIC SAFETY CONFIGURATION	
	CHK'D JJB 6/25/92		
	APP'D. JOEL J. BOSEN 6/25/92		
	APP'D. GOVT.	SIZE A	FSCM NO	DWG NO. 01151-2576
		SCALE N/A	WT.	SHEET 1 OF 2

REVISIONS				
REV	DESCRIPTION	CHG. NO.	APP'D	DATE
C		655715		

ENTITY PARAMETER FOR 1151 LOW POWER ELECTRONICS Ex Ia IIC T6 (Tamb=40°C) (CLASS I, ZONE 0):
Ex Ia IIC T5 (Tamb=70°C)

APPARATUS PARAMETER	BARRIER PARAMETER
Ui = 30V Ii = 200mA Pi = 1.0W Ci = 0.034 μF Li = 20 μH	Uo MUST BE LESS THAN OR EQUAL TO 30V Io MUST BE LESS THAN OR EQUAL TO 200mA $\frac{Uo * Io}{4}$ MUST BE LESS THAN OR EQUAL TO 1.0W Co MUST BE GREATER THAN (C_{cable} + Ci) and Lo MUST BE GREATER THAN L_{cable} or L/R RATIO IS GREATER THAN L/R OF CABLE

THE ENTITY CONCEPT ALLOWS INTERCONNECTION OF INTRINSICALLY SAFE APPARATUS NOT SPECIFICALLY EXAMINED IN COMBINATION AS A SYSTEM. REFER TO AS 2380.7 FOR DETERMINATION OF EXTERNAL CIRCUIT PARAMETERS AND INSTALLATION RULES FOR INTRINSICALLY SAFE CIRCUITS.

TO ASSURE AN INTRINSICALLY SAFE SYSTEM THE TRANSMITTER AND BARRIER MUST BE WIRED IN ACCORDANCE WITH THE BARRIER MANUFACTURERS FIELD WIRING INSTRUCTIONS AND THE CIRCUIT DIAGRAM SHOWN BELOW.

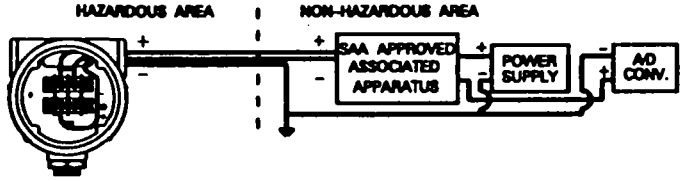

Rosemount Inc. 12001 Technology Drive Eden Prairie, MN 55344 USA	THIS DRAWING WAS CREATED ON CAD. DRAWING IS ARCHIVED ON MAGNETIC TAPE FOR ECO CHANGES.		
DR. S.N.DENNIS	SIZE A	FSCM NO	DWG NO. 01151-2576
ISSUED	SCALE N/A	WT. ———	SHEET 2 OF 2

Glossary

Calibration
Operations that adjust for minor effects such as span shift and zero shift. These effects are usually caused by outside influences such as rotating a transmitter, or mounting a transmitter on its side. See **Section 2 Installation**.

Damping
Output function that increases the response time of the transmitter to smooth the output when there are rapid input variations. **See Section 3 Calibration.**

Lower Range Limit (LRL)
Lowest value of the measured variable that the transmitter can be configured to measure.

Lower Range Value (LRV)
Lowest value of the measured variable that the analog output of the transmitter is currently configured to measure.

Reranging
Configuration function that changes the transmitter 4 and 20 mA settings. **See Section 3 Calibration.**

Span
Algebraic difference between the upper and lower range values. **See Section 3 Calibration.**

Upper Range Limit (URL)
Highest value of the measured variable that the transmitter can be configured to measure.

Upper Range Value (URV)
Highest value of the measured variable that the analog output of the transmitter is currently configured to measure.

Zero Trim
A zero-based, one-point adjustment used in differential pressure applications to compensate for mounting position effects or zero shifts caused by static pressure. **See Section 3 Calibration.**

Index

A

Access Requirements 2-3
- Circuit Side of Electronics Housing 2-3
- Environmental 2-3
- Exterior of Electronics Housing 2-3
- Housing Rotation 2-3
- Process Flange Orientation 2-3
- Terminal Side of Electronics Housing 2-3

Adjustment
- Damping Adjustment 3-8
- Linearity Adjustment 3-7

Ammeter
- Connecting 2-10

Analog Meters 4-3

Approval Drawings A-1

Approvals
- Intrinsic Safety Entity Parameters 6-4

Assembly
- LCD Meters 4-5

B

Backup Ring Installation 5-8

Brackets
- Mounting Brackets 2-5
- Mounting Options 2-6

Bubbler Liquid Level Measurement 2-16

Bubbler System in Open Vessel 2-16
- Liquid Level Measurement 2-16

C

Calibration 3-1
- Damping Adjustment 3-8
- Data Flow 3-3
- Elevated or Suppressed Zeros 3-7
- Linearity Adjustment 3-7
- Quick Calibration Procedure 3-1
- Span Adjustment Range 3-4
- Static Pressure Span Correction Factor 3-9
- Zero Adjustment Range 3-4
- Zero and Span Adjustment 3-6

Certifications
- *Hazardous Locations Certifications 2-12*
- Intrinsic Safety Entity Parameters 6-4

Circuit Side of Electronics Housing 2-3

Closed Vessels
- Dry Leg Condition 2-14
- Liquid Level Measurement 2-14
- Wet Leg Condition 2-15

Conditions
- General 2-1

Conduit Sealing 2-10

Configuration
- *LCD Meter 4-3*
- Standard 6-8

Connecting the Electrical Housing to the Sensor 5-8

Considerations
- Mechanical 2-1

Cover Removal 4-4

Cover Replacement 4-5

D

Damping Adjustment 3-8

Data Flow with Calibration Options 3-3

Diagnostics
- Hardware Diagnostics 5-1

Diagrams
- Installation Diagrams 2-11

Dimensional Drawing 2-2

Disassembly
- Transmitter Disassembly 5-4

Drain/Vent Valves 2-7

Drawings 2-2
- Approval A-1

Dry Leg Condition
- Liquid Level Measurement 2-14

E

Electrical Considerations 2-8
- Grounding 2-11
- Power Supply 2-10

Elevated or Suppressed Zeros 3-7

Elevation and Suppression Jumper Settings 3-5

Environmental Considerations
- Grounding 2-11
- Grounding Effects 2-12
- Hazardous Locations Certifications 2-12

Environmental Requirements 2-3
- Conduit Sealing 2-10
- Electrical Considerations 2-8
- Mounting Brackets 2-5
- Mounting Effects 2-4
- *Mounting Requirements 2-7*
- Power Supply 2-10
- Process Connections 2-4
- Wiring 2-9

Exterior of Electronics Housing 2-3

F

Filter Terminal Block (Option Code R2) 4-8

Filter Terminal Blocks
- *Installation 4-8*

Functional Specifications 6-1

G

Gas
- Mounting Requirements 2-7

General Considerations 2-1

Glossary of terms G-1

Grounding 2-11
- Effects 2-12
- *Effects on Accuracy for Fast Sample Computers 2-13*
- Signal Wiring 2-11
- Transmitter Case 2-11

H

Hardware Diagnostics 5-1

Hazardous Locations Certifications 2-12

Housing Rotation 2-3

I

Impulse Piping 2-8
  Installation Diagrams 2-7
Information Storage 4-5
Installation 2-1, 4-8
  Environmental Requirements 2-3
  General 2-1
  Mechanical Considerations 2-1
  Mounting Bracket Options 2-6
  Power Supply Load Limitations 2-10, 6-2
Installation Diagrams 2-11
  Impulse Piping 2-7
Intrinsic Safety Entity Parameters 6-4
Introduction 1-1
  Using This Manual 1-1

L

LCD Meter Configuration
  Position the Decimal Point and Select the Meter Function 4-4
  Remove the Cover 4-4
  Replace the Cover 4-5
  Set the Display Equivalent to a 20 mA Signal 4-5
  Set the Display Equivalent to a 4 mA Signal 4-5
  Store the Information 4-5
LCD Meters 4-3
  LCD Meter Assembly 4-5
  LCD Meter Configuration 4-3
  LCD Meter Specifications 4-6
Linearity Adjustment 3-7
Liquid
  Mounting Requirements 2-7
Liquid Level Measurement
  Bubbler System in Open Vessel 2-16
  Closed Vessels 2-14
  Dry Leg Condition 2-14
  Open Vessels 2-14
  Wet Leg Condition 2-15
List of Spare Parts 6-13

M

Maintenance and Troubleshooting 5-1
  Hardware Diagnostics 5-1
  Reassembly Procedure 5-8
  Return of Material 5-10
  Transmitter Disassembly 5-4
Mechanical Considerations 2-1
  Dimensional Drawing 2-2
Meter Configuration
  LCD Meter Configuration 4-3
Meters
  Analog Meters 4-3
  LCD Meters 4-3
  Optional Plug-in Meters 5-10
Mounting Brackets 2-5, 4-1
  Mounting Bracket Options 2-6, 4-2
Mounting Effects 2-4
Mounting Requirements 2-7
  Drain/Vent Valves 2-7
  Impulse Piping 2-8
  Taps 2-7
Multimeter
  Connecting 2-10

O

Open Vessels
  Liquid Level Measurement 2-14
Optional Plug-in Meters 5-10
Options 4-1
  Analog Meters 4-3
  LCD Meters 4-3
  Mounting Brackets 4-1
  Terminal Blocks 4-7
O-ring Installation 5-8
Output Code Availability 6-2

P

Parts List 6-13
Performance Specifications 6-6
Physical Specifications 6-8
Piping
  Impulse Piping 2-8
Position the Decimal Point and Select the Meter Function 4-4
Power Supply 2-10
  Installation Diagrams 2-11
  Load Limitations 2-10, 6-2
Preliminary Precaution 5-8
Process Connections 2-4
Process Flange Orientation 2-3
Process Sensor Body Removal 5-5
  Sensor Module Checkout 5-7

Q

Quick Calibration
  Quick Calibration Procedure 3-1
  Transmitter Data Flow 3-3

R

Rangeability 6-1
Reassembly Procedure 5-8
  Backup Ring and O-ring Installation 5-8
  Connecting the Electrical Housing to the Sensor 5-8
  Optional Plug-in Meters 5-10
  Preliminary Precaution 5-8
Remove the Cover 4-4
Removing the Sensor from the Electrical Housing 5-6
Replace the Cover 4-5
Requirements
  Environmental 2-3
Retrofitable Transient Terminal Block (Option Code R9) 4-8
Return of Material 5-10

S

Sensor
  Sensor Body Removal 5-5
  Sensor Module Checkout 5-7
  Sensor Removal 5-6
Set the Display Equivalent to a 20 mA Signal 4-5
Set the Display Equivalent to a 4 mA Signal 4-5
Signal Wiring 2-11
Span Adjustment Range 3-4
Spare Parts List 6-13
Specifications and Reference Data 6-1
  Functional Specifications 6-1
  Model 1151 Transmitter Range Availability 6-1
  Output Code Availability 6-2
  Performance Specifications 6-6
  Physical Specifications 6-8
  Rangeability Table 6-1
  Spare Parts List 6-13
Static Pressure Span Correction Factor 3-9
Steam
  Mounting Requirements 2-7
Store the Information 4-5
Suppressed Zeros
  Elevated Zeros 3-7
Systematic Error Correction 5-2

T

Taps 2-7
Terminal Blocks 4-7
  Exploded View (Figure 5-5) 4-9
  Filter Terminal Block (Option Code R2) 4-8
  Retrofitable Transient Terminal Block (Option Code R9) 4-8
  Specifications 4-10
  Transient Protection and Filter Terminal Block (Option Code R1) 4-8
Terminal Connections 2-9
  Electrical Considerations 2-9
Terminal Side of Electronics Housing 2-3
Transient Protection
  Installation 4-8
Transient Protection and Filter Terminal Block (Option Code R1) 4-8
Transmitter
  Case 2-11
  Data Flow 3-3
  Disassembly 5-4
  Exploded View 5-5
  Overview 1-2
  Quick Calibration 3-1
  Range Availability (1151) 6-1
Transmitter Disassembly
  Process Sensor Body Removal 5-5
  Removing the Sensor from the Electrical Housing 5-6
  Sensor Module Checkout 5-7
Transmitter Reassembly 5-8
  Backup Ring and O-ring Installation 5-8
  Connecting the Electrical Housing to the Sensor 5-8
  Optional Plug-in Meters 5-10
  Preliminary Precaution 5-8

U

Using This Manual 1-1

V

Vent/Drain Valves 2-7
Vessels
  Open/Closed 2-14

W

Wet Leg Condition
  Example (Figure 4-6) 2-15
  Liquid Level Measurement 2-15
Wiring 2-9
  Electrical Considerations 2-9

Z

Zero Adjustment Range 3-4
  Elevation and Suppression Jumper Settings 3-5
Zero and Span Adjustment 3-6

ASHCROFT®

Diaphragm Seals & Pressure Instrument Isolators

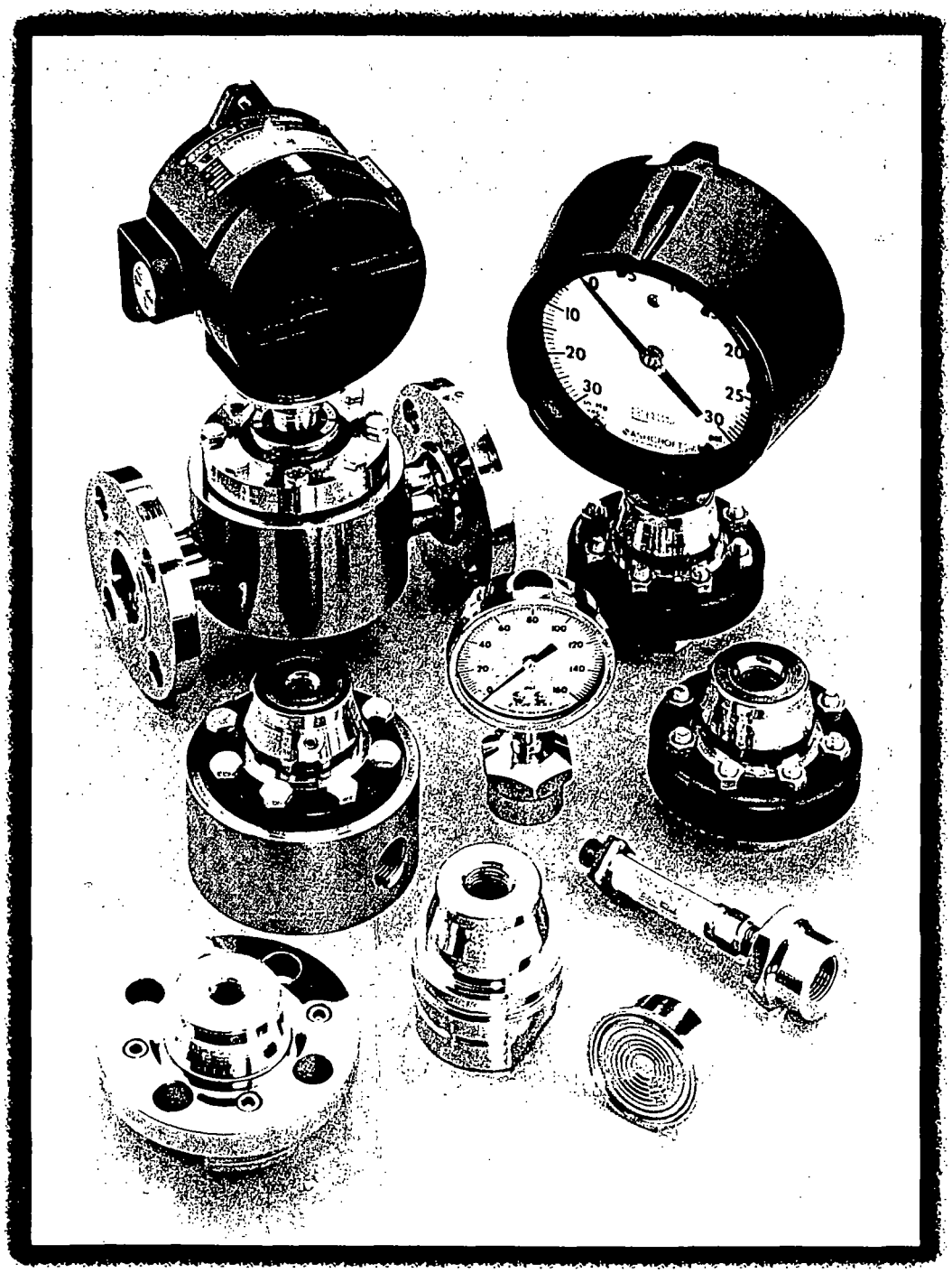

INSTRUMENT DIVISION DRESSER
STRATFORD OPERATIONS

BULLETIN DS-1

Introduction

Ashcroft Diaphragm Seals & Pressure Instrument Isolators

A diaphragm seal is a device which is attached to the inlet connection of a pressure instrument to isolate its measuring element from the process media. The space between the diaphragm and the instrument's pressure sensing element is solidly filled with a suitable liquid. Displacement of the liquid fill in the pressure element, through movement of the diaphragm, transmits process pressure changes directly to a gauge, transmitter, switch or any other pressure instrument. When diaphragm seals are used with pressure gauges, an additional 0.5% tolerance must be added to the gauge accuracy because of the diaphragm spring rate.

Used in a variety of process applications where corrosives, slurries, or viscous fluids may be encountered, the diaphragm seal affords protection to the instrument where:

- The process fluid being measured would normally clog the pressure element.
- Pressure element materials capable of withstanding corrosive effects of certain fluids are not available.
- The process fluid might freeze due to changes in ambient temperatures and damage the element.

All Ashcroft diaphragm seals, with the exception of Type 310 mini-seals, are continuous duty. Should the pressure instrument fail or be removed accidentally, the diaphragm will seat against a matching surface, preventing damage to the diaphragm or leakage of the process fluid.

When selecting a diaphragm seal, consider the following:

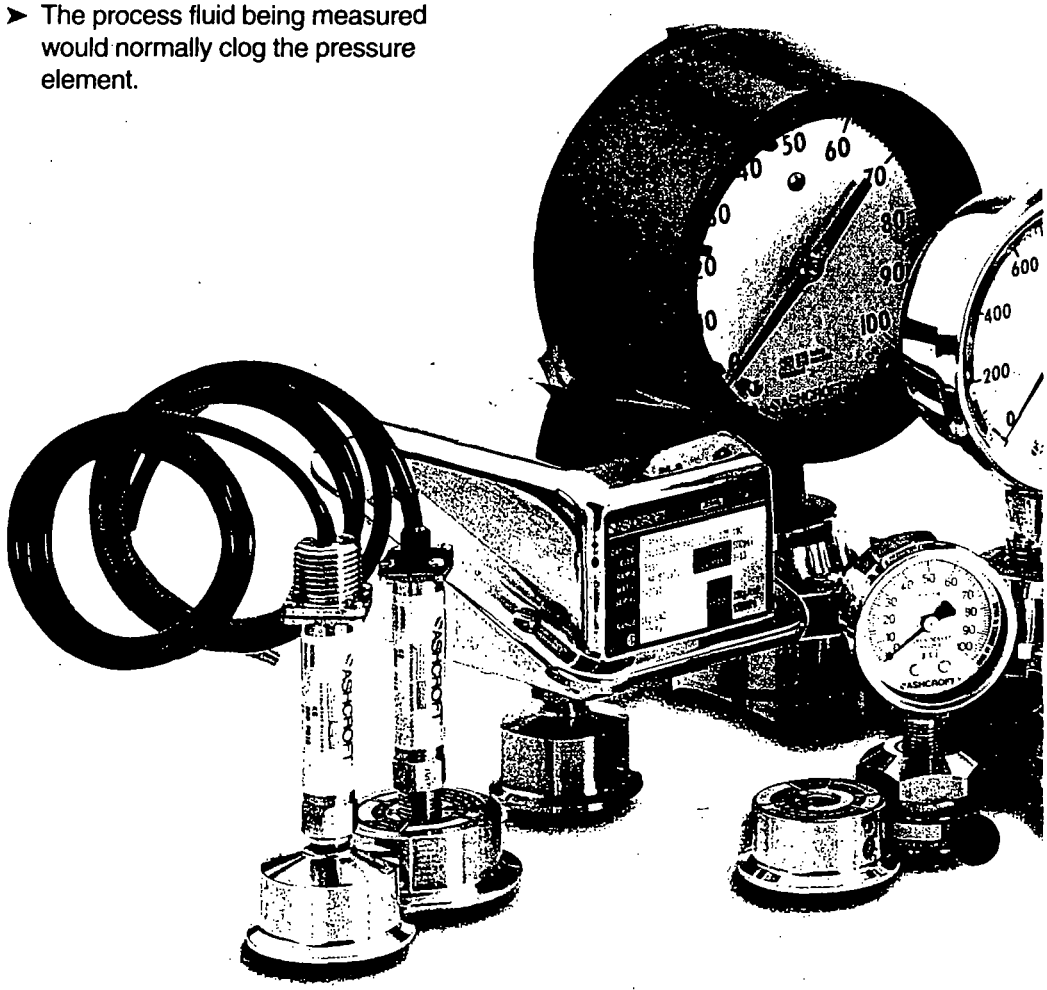

CONTENTS

Page	
2 & 3	Features and benefits
4 & 5	Top housings & diaphragms
6 & 7	Specification matrix
8	Selection information
9	Options & How to order
10 -14	Dimension drawings

Seal Mounting

➤Threaded – the diaphragm seal connects directly to the process by means of a female NPT thread.

➤ Flanged – the diaphragm seal is attached to the process by means of a flange as specified in ASME B16.5

➤ In-line Welded – various types of welded-in diaphragm seals for flow-thru applications.

Diaphragm Types

➤ Capsule – threaded-in capsule design enables the diaphragm to be removed and/or replaced.

➤ Welded– the diaphragm is welded directly to the top housing.

➤ Bonded – Teflon® or Viton® diaphragm bonded directly to the top housing.

➤ Clamped – metal, Viton®, Teflon®, or Kalrez® diaphragm materials are clamped between the top and bottom housing.

Top Housing

Ashcroft diaphragm seals (with the exception of Types 310, 320, 400 & 500 series) are normally furnished with a nickel/chrome plated carbon steel top housing. As an option, Ashcroft offers 316 stainless steel. Types 310, 320, 400 & 500 series come standard with a 316L stainless steel top housing. A standard fill/bleed connection allows the seal and instrument to be evacuated and filled.

Lower Housing

Lower housings are available in a variety of materials to fit your application needs. Selection of the lower housing material is important since it is in direct contact with the process media. See pages 6 and 7 for specifics.

Diaphragm Materials

The diaphragm is in direct contact with the process, and selecting the proper diaphragm is important. See pages 6 and 7 for a complete offering of diaphragm materials.

Clamping Rings

Standard is black epoxy painted carbon steel. 316 stainless steel is an available option.

Upper Flange Rings

ASME B16.5 nickel/chrome plated carbon steel flanged rings are standard. 316 stainless steel is optional.

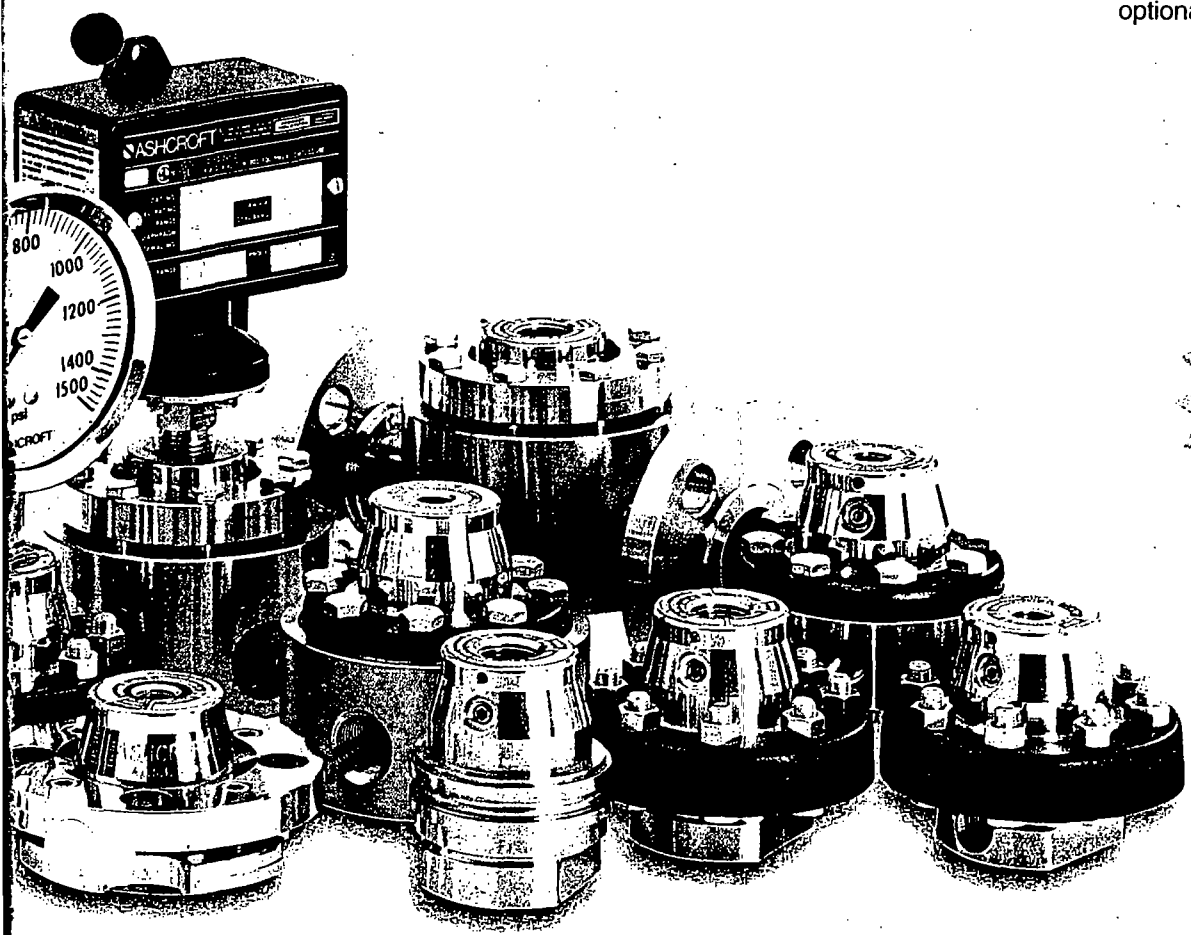

Top Housing & Diaphragm

Ashcroft Diaphragm Seals &
Pressure Instrument Isolators

CAPSULE TYPE 100

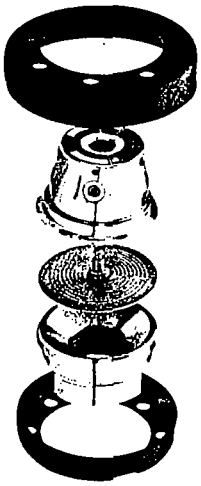

A metal diaphragm capsule is threaded into a nickel/chrome plated carbon steel top housing. 316 stainless steel is an optional top housing material. The capsule construction assures positive sealing at all surfaces, preventing any leakage of the filling fluid from the system. The capsule design allows for the top housing and pressure instrument to be removed without losing the fill fluid.

A Viton O-ring, compatible with all standard fill fluids, and a Teflon back-up ring provide a seal between the diaphragm capsule and the top housing. Since the diaphragm capsule is completely sealed upon being threaded into the top housing, tension of the clamping bolts has no effect on the sealing ability of the filled system. The diaphragm capsule can be replaced without replacing the entire top housing. The top housing and diaphragm capsule are interchangeable with all Ashcroft bottom housings.

WELDED OR BONDED TYPE 200

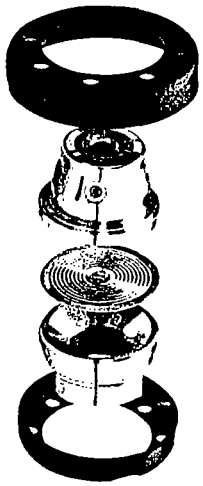

A metal diaphragm capsule is welded to the top housing, which is then clamped to a bottom housing, providing a double, positive seal. The welded design allows for the top housing and pressure instrument to be removed without losing the fill fluid. The top housing and welded diaphragm are interchangeable with all standard Ashcroft bottom housings. For applications where the pressure range is less than 15 psi, or the vacuum range is less than 30"Hg, a Viton diaphragm seal is recommended. The Type 200 bonded Viton or Teflon diaphragm seal is similar in construction to the Type 300 clamped Viton or Teflon diaphragm seal. The Viton or Teflon diaphragm in the Type 200 seal is permanently bonded to the top housing, allowing the top housing and instrument to be removed without losing the fill fluid. Viton can be used with low pressure instruments such as Ashcroft (inches of water) bellows-type gauges and Ashcroft pressure switches.

CLAMPED TYPE 300

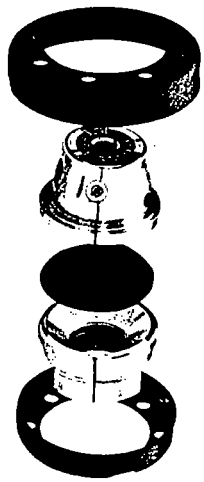

A metal, elastomeric, or Teflon diaphragm is clamped securely between the top and bottom housings by clamp rings, assuring a positive seal. The top housing is contoured to match the diaphragm, minimizing distortion of the diaphragm should the pressure instrument be removed. The Type 300 series diaphragm seal is available with either a threaded or flanged process connection.

A Viton or Kalrez diaphragm enables the Type 300 seal to be used on ranges below 15 psi and vacuum less than 30"Hg. The top housing and diaphragm are interchangeable with all standard Ashcroft bottom housings. A virgin TFE Teflon diaphragm is also available. Features include toughness, flexibility and fatigue resistance for superior service life. A Teflon diaphragm offers maximum corrosion resistance to most acids, caustics, alkalies, ketones, hydrocarbons and alcohols. Viton or Kalrez can be used with low pressure instruments such as Ashcroft bellows type gauges and Ashcroft pressure switches.

THREADED – ALL WELDED TYPE 400

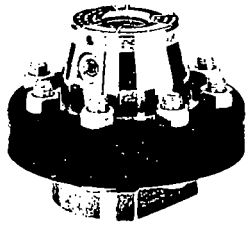

The Ashcroft Type 400 welded diaphragm seal is recommended for use in controlling fugitive emissions and where clamped joints are not acceptable. Available with ¼, ½, ¾ and 1 NPT connections with a standard pressure rating of 7500 psi. A 15,000 psi pressure rating is achieved with high-pressure rings. Optional socket weld or butt weld process connections are available. Type 401 has a flushing connection for easy cleaning. The 400 series all welded design is available with either a 316L stainless steel, Hastelloy C or Monel lower housing. Available diaphragms include 316L stainless steel, Hastelloy C, Monel or Tantalum. A 316L stainless steel top housing is standard with all lower housing materials except Monel (where a Monel top housing is supplied).

FLANGED – ALL WELDED TYPE 402

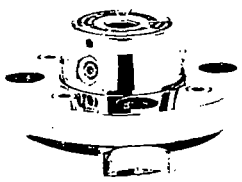

With flange classes of 150 thru 1500, the 402 series all welded diaphragm seal is available with a standard raised-face flange. Flat-faced or ring joint flanges are available as options. Diaphragm materials include 316L stainless steel, Hastelloy C, Monel and Tantalum. A 316L stainless steel top housing is standard with all lower housing materials except Monel (where a Monel top housing is supplied). Available with 316L stainless steel, Hastelloy C, or Monel lower housings.

THREADED – ALL WELDED TYPE 500

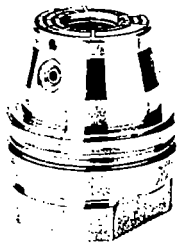

The Ashcroft 500 series all welded diaphragm seal is recommended for use on applications to control fugitive emissions and where clamped joints are not acceptable. Maximum pressure rating is 500 psi. Similar in construction to the 400 series all welded seal, the 500 series is available with a 316L stainless steel, Hastelloy C or Monel lower housing. A 316L stainless steel top housing is standard with all lower housing materials except Monel. A choice of 316L stainless steel, Hastelloy C, Monel or Tantalum diaphragms, is available. Type 501 has a flushing connection for cleaning. See pages 6 and 7.

MINI-SEAL TYPE 310

The compact size of the Ashcroft 310 mini-seal allows it to fit into space-restricted areas and is designed to protect transducers, mini-switches, and 3½" or smaller dial size pressure gauges from corrosion, plugging or freeze-up. All welded metal construction prevents leakage of process media. It is rated for 2500 psi at 100°F and has a 316L stainless steel top housing standard. Lower housing materials include 316L stainless steel or Hastelloy C. Diaphragm materials include 316L stainless, Hastelloy C or Tantalum. ¼ NPT or ½ NPT process connection sizes are available. Instrument connection is ¼ NPT only.

QUICK CONNECT TYPE 320

Available in 1½" or 2" process connection sizes, the quick-connect diaphragm seal is designed especially for those applications that require ease of dismantling and reassembly. Typical applications include the pharmaceutical, dairy, food processing, biotechnology, and filtration markets. Also included are breweries, distilleries, wineries and citrus juice production plants. Standard features include a 316L stainless steel diaphragm welded to a 316L stainless steel top housing, a fill/bleed connection, and a top housing and pressure instrument removable from the process. The 320 quick-connect seal is compatible with Triclover Triclamp® and Cherry Burrell S line® connections. For applications required to meet 3A sanitary standard 37-01, see Bulletin SG-2.

Diaphragm material pressure and temperature limits

Diaphragm material	Maximum Pressure (psi)	Temp. limit
Teflon	2,500	-40/400°F
Viton	500	-40/350°F
Kalrez	500	30/350°F
Metal diaphragms - see pages 6 and 7 ❷		

Bottom housing material pressure and temperature limits

Bottom housing material	Maximum Pressure (psi)	Temp. limit
Teflon	270	400°F
Kynar	200	180°F
PVC:		
Threaded❸	200	74°F
Threaded❸	125	125°F
Threaded❸	80	150°F
Flanged	75	100°F
Halar coated steel	❶	-40/300°F
All other metal lower housings	❶	❷

❶ Determined by pressure rating or flange class.

❷ Restricted to temperature range of fill material (see page10).

❸ A ½ NPT (maximum) threaded bottom housing is available on application. Socket weld connection is standard.

Diaphragm seal displacement

Type	Material	Maximum Displacement Cubic inches	Cubic centimeters
100, 200, 300	Metal	0.07	1.14
200, 300	Teflon	0.14	2.23
200, 300	Viton	0.5	8
300	Kalrez	0.5	8
310	Metal	0.025	0.41
320 (1½" process)	Metal	0.025	0.41
320 (2" process)	Metal	0.07	1.14

Specification Matrix

Ashcroft Diaphragm Seals & Pressure Instrument Isolators

● = AVAILABLE

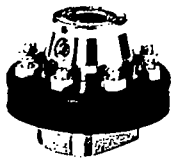
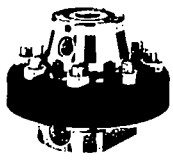
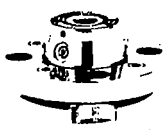

Process connection type		Threaded	Threaded w/flushing connection	Raised face flange	Raised face flange w/flushing connection	In-line threaded
Model number		**100/200/300**	**101/201/301**	**102/202/302**	**103/203/303**	**104/204/304**
Process connection size (NPT)	**Code**					
¼	25	●	●			●
½	50	●	●	●	●	●
¾	75	●	●	●	●	●
1	10	●	●	●	●	
1½	15			●	●	
2	20			●	●	
3	30			●	●	
4	40					
6	60					
8	80					
Diaphragm materials						
316L stainless steel	S	●	●	102 & 202	103 & 203	104 & 204
304 stainless steel	C	●	●	102 & 202	103 & 203	104 & 204
K-Monel	P	●	●	102 & 202	103 & 203	104 & 204
Nickel	N	●	●	102 & 202	103 & 203	104 & 204
Carpenter 20	D	●	●	102 & 202	103 & 203	104 & 204
Tantalum	U	●	●	102 & 202	103 & 203	104 & 204
Hastelloy B	G	●	●	102 & 202	103 & 203	104 & 204
Hastelloy C	H	●	●	102 & 202	103 & 203	104 & 204
Teflon	T	200 & 300	201 & 301	202 & 302	203 & 303	204 & 304
Viton	Y	200 & 300	201 & 301	202 & 302	203 & 303	204 & 304
Kalrez	K	300	301	302	303	3
Titanium	TI	300	301	302	303	30
Bottom housing materials						
Steel	B	●	●	●	●	●
304L stainless steel	CL	●	●	●	●	●
316L stainless steel	SL	●	●	●	●	●
Hastelloy B	G	●	●	●	●	●
Hastelloy C	H	●	●	●	●	●
Carpenter 20	D	●	●	●	●	●
Monel 400	M	●	●	●	●	●
Inconel 800	W	●	●	●	●	●
Nickel	N	●	●	●	●	●
PVC	V	Socket Weld		1, 1½ NPT		
Tantalum clad stainless steel	SU			●		
Halar® coated steel	SH			●		
Teflon	T			1, 1½, 2 NPT		
Kynar	KY	Only ¼ or ½ NPT		1, 1½, 2 NPT		
Titanium	TI	●	●	●	●	●
Pressure ratings						
500 psi		Viton or Kalrez diaph. only	Viton or Kalrez diaph. only			Viton or Kalrez diaph. only
2500 psi		Metal & Teflon® diaph.	●			Metal & Teflon® diaph.
5000 psi	HP	100 & 200 metal				
7500 psi						
15000 psi	HP					
Flange class						
150, 300, 600, 900, or 1500				Kalrez, Teflon, Viton, Kynar 150 only	Kalrez, Teflon, Viton, Kynar 150 only	
Instrument connection size						
¼	02T	●	●	●	●	●
½	04T	●	●	●	●	
Filling fluid						
Glycerin	CG	●	●	●	●	
Silicone (direct to 10' capillary)	CK	●	●	●	●	●
Silicone (over 10' capillary)	EJ	●	●	●	●	●
Halocarbon	CF	●	●	●	●	●
Syltherm	HA	●	●	●	●	●

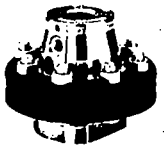

Saddle	In-line flanged	In-line socket weld	Threaded (*flushing conn.)	Threaded (*flushing conn.)	Raised face flange	Threaded Mini	Quick connect
105/205	106/206	107/207	400/401*	500/501*	402	310	320
		•	•	•		•	
	•	•	•	•	•	•	
	•	•	•	•	•		
	•	•	•	•	•		
	•	•			•		•
	•	•			•		•
3"	•				•		
4" and larger	•						
	•						
	•						
•	•	•	•	•	•	•	•
•	•	•					
•	•	•	•	•	•	•	
•	•	•					
•	•	•					
•	•	•	•	•	•	•	
•	•	•					
•	•	•	•	•	•	•	
205	206	207					
205	206	207					
•	•	•					
•	•	•					
•	•	•	•	•	•	•	•
•	•	•					
•	•	•	•	•	•	•	
•	•	•					
•	•	•	•	•	•	•	
•	•	•					
•	•	•					
•		•					
Viton diaph. only		Viton diaph. only		•			
etal & Teflon® diaph.		Metal & Teflon® diaph.				•	
			•				
			400 only				
	150 & 300				•		
•	•	•	•	•	•	•	•
•	•	•	•	•	•		2" only
•	•	•	•	•	•	•	•
•	•	•	•	•	•	•	•
•	•	•	•	•	•	•	•
•	•	•	•	•	•	•	•
•	•	•	•	•	•	•	•

Selection Information

Ashcroft Diaphragm Seals &
Pressure Instrument Isolators

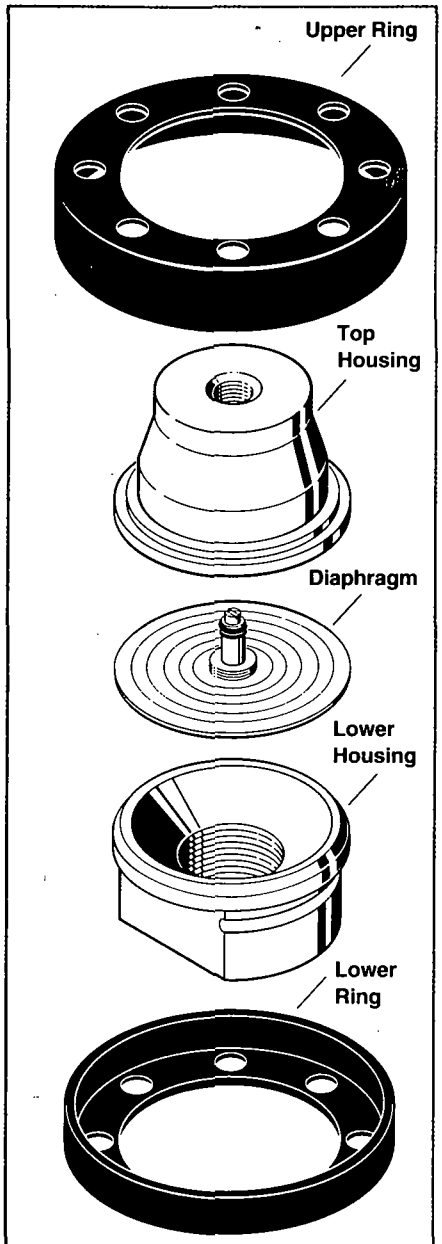

Type 100 Diaphragm Seal Illustrated

Warning:
All seal components should be selected considering process and ambient operating conditions to prevent misapplication. Improper application could result in failure and possible injury or property damage.

Top Housing:
The top housing includes a connection for the pressure instrument and may support the upper surface of the diaphragm. Since this component is not in contact with the process fluid, it is commonly made of steel. However, if the external atmosphere contains corrosive elements, other materials like 316 SS, may be required.

Diaphragm:
The diaphragm separates the bottom housing from the fill fluid. The diaphragm material must be compatible with the process fluid. Because of its thin cross-section, special attention must be given to diaphragm material selection. Operating temperatures must not exceed the limit for the material used. A metal diaphragm is not recommended for low pressure ranges, such as inches of water or equivalent. For such applications, use a Viton diaphragm bonded or clamped to the top housing (Type 200 and 300 seal) or a Kalrez diaphragm clamped to the top housing (Type 300 seal).

Bottom Housing:
The bottom housing material is in direct contact with the process fluid and must therefore be compatible with the process fluid.

Fill Fluids:
The fill fluid must be capable of withstanding operating process temperature. Glycerin or silicone can combine with strong oxidizing agents such as oxygen, chlorine, nitric acid and hydrogen peroxide causing fires or violent reactions. Seal assemblies intended for such applications should be filled with an inert fluid such as Halocarbon. Seals intended for use with oxygen must be manufactured completely free of oil.

Pressure Rating:
The maximum allowable pressure for the seal selected must not be exceeded. Flange seals are generally limited to the maximum rating of the flange itself. Plastic bottom housings will not withstand the same pressures as metal equivalents. Maximum allowable pressures for all materials decrease as temperatures increase. Note: Maximum vacuum indication may not exceed 25" Hg. Consult Customer Service in Stratford, CT if higher vacuum indication is required.

Accuracy/Temperature Errors:
The addition of a liquid filled diaphragm seal to an instrument will degrade its accuracy by 0.5% (maximum). In addition, changes in ambient temperatures will introduce temperature errors because of the expansion/contraction of the fill.

Leaks:
The entire filled portion of the system must be absolutely leak tight, since any loss of fill will result in significant errors.

Viton®, Teflon®, Kalrez®, Kynar® – DuPont Inc.Trademark
Carpenter 20® – Carpenter Steel Co. Trademark
Inconel®, Monel® – Huntington Alloys Inc. Trademark
Hastelloy – Cabot Corp. Trademark
Nickel® – International Nickel Co . Inc. Trademark
Halocarbon® – Halocarbon Products Co. Trademark
Syltherm 800® – Dow Corning Trademark
Triclamp® – Triclover® Corp. Trademark
S line® – Cherry Burrell Corp. Trademark

Options & How to Order

Ashcroft Diaphragm Seals &
Pressure Instrument Isolators

Options & accessories	Code	Comments
Plain flexible line assembly	1115E	5 foot standard (maximum length 100 feet)
Armored flexible line assembly	1115EXA4	5 foot standard (maximum length 100 feet)
Stainless steel locking device	LD	For use with all seals except Types 105, 106, 107,310 & 320
Pipe plug	PU	For flushing connections. Pipe plugs supplied in same materials as bottom housings.
Top housing–AISI 316 SS	YT	
Stainless steel clamp rings	SE	Stainless steel clamp rings and flanged ring–includes 300 series stainless steel clamping bolts (1500 psi/max). Stainless steel clamping bolts not available for 1" and larger 102, 202, 302 and 303 flanged seals. Bolts supplied are for shipping purposes only.
High pressure clamp rings	HP	For Types 100, 200 and 400 only.
Flat face flange	FF	Not available in two-piece flanged seals.
Ring joint flange	RJ	For flanged seals
Clamping bolts	SB	Type 300 series St. St. (1500 psi max)
No Teflon coating on metal diaphragm and special machining on bottom housing	NX	200 psi max. pressure rating
Cleaned for gaseous oxygen or other strong oxidizing agent applications	6B	Halocarbon fill required. See filling fluid table on page 6 for code.

Filling fluids

Filling	Service	Instrument connection	Temperature range °F	Code
Glycerin	Pressure	Direct only	0/400	CG
Silicone	Pressure/vacuum	Direct or flexible line	-40/600	CK direct to 10' EJ over 10'
Halocarbon®	Pressure in presence of strong oxidizing agent	Direct or flexible line	-70/300	CF
Syltherm 800®	Pressure/ Vacuum	Direct or flexible line	-40/750	HA

How to order a diaphragm seal

Select:	50	100	S	S	04T	XCG	LD
1. Process connection code: ½"							
2. Model number code:100							
3. Diaphragm material code: 316 SS							
4. Bottom housing material code: 316 SS							
5. Instrument connection code (with a "T" suffix): ¼ NPT (02T), ½ NPT (04T)							
6. Fill fluid code: Glycerin							
7 Options & accessories: Locking device							

Dimensions

Ashcroft Diaphragm Seals &
Pressure Instrument Isolators

Types 100, 200, 300, 400

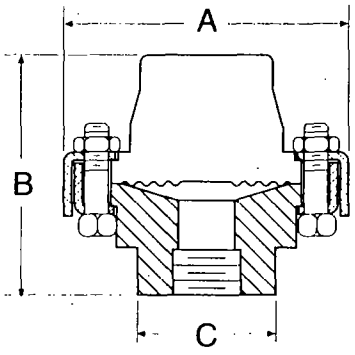

Types 100, 200, 300, 400 – Threaded ¼, ½, ¾, 1 NPT

A		B		C	
In	mm	In	mm	In	mm
3¾	(95)	2⅞	(73)	1 13/16	(46)

Types 101, 201, 301, 401

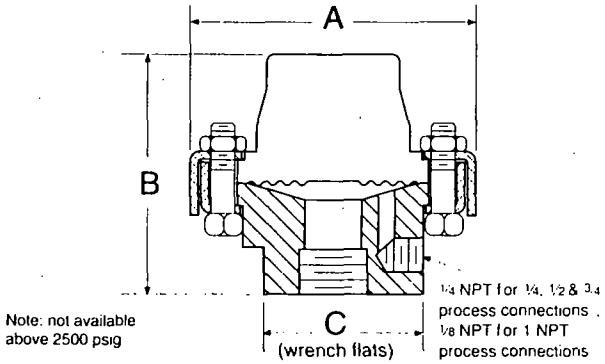

Types 101, 201, 301, 401 – Threaded ¼, ½, ¾, 1 NPT
with flushing connection

A		B		C	
In	mm	In	mm	In	mm
3¾	(95)	2⅞	(73)	1 13/16	(46)

Types 102, 202, 302

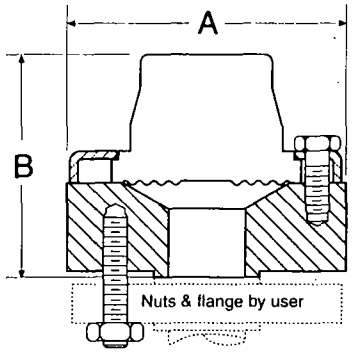

Types 102, 202, 302 – Flanged ½", ¾"

Size	Flange Rating #	A In	A mm	B In	B mm
½"	150	3½	(89)	2 15/16	(75)
	300 or 600	3¾	(95)	3	(76)
	900 or 1500	4¾	(121)	3 3/16	(81)
¾"	150	3⅞	(98)	2 13/16	(71)
	300 or 600	4⅝	(117)	3	(76)
	900 or 1500	5⅛	(130)	3 3/16	(81)

Types 102, 202, 302

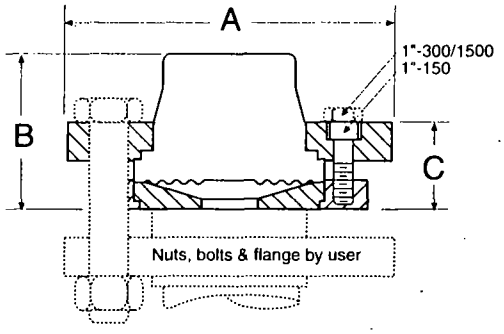

Types 102, 202, 302 – Flanged 1" (raised face only)
(two piece bottom housing) – all materials except PVC & Teflon

Size	Flange Rating #	A In	A mm	B In	B mm	C In	C mm
1"	150	4¼	(100)	2¼	(57)	1⅜	(35)
	300 or 600	5	(127)			1 5/16	(33)
	900 or 1500	6	(152)			1 9/16	(40)

Types 102, 202, 302

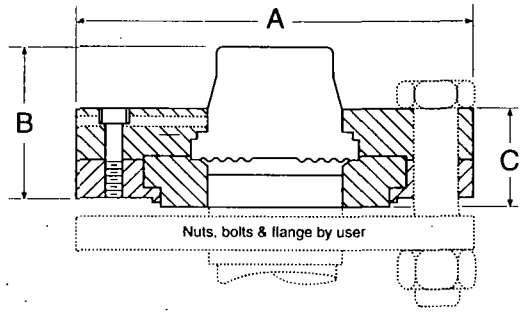

Types 102, 202, 302 – Flanged (raised face only) (two piece bottom housing) – 1", 1½" – PVC, Teflon and Kynar. 2" Teflon and Kynar.

Flange Size	Flange Rating #	A in	A mm	B in	B mm	C in	C mm
1"	150	4¼	(100)	2 3/16	(56)	1⅜	(35)
1½"	150	5	(127)	2 5/16	(59)	1 13/32	(39)
2"	150	6	(152)	2⅛	(54)	1 9/16	(40)

Types 102, 202, 302

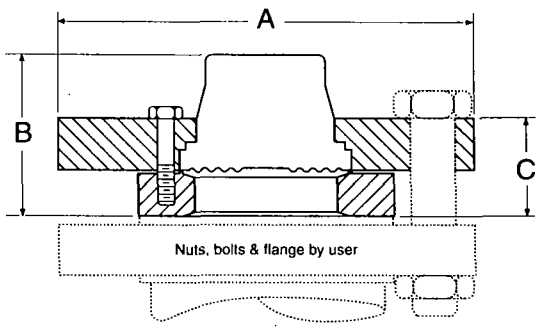

Types 102, 202, 302 – Flanged (one piece bottom housing) 1", 2", 3" (raised face only) – all materials except PVC, Teflon and Kynar.

Flange Size	Flange Rating #	A in	A mm	B in	B mm	C in	C mm
	150	5	(127)			1½	(38)
1"	300 or 600	6¼	(159)	2⅜	(61)	1½	(38)
	900 or 1500	7	(178)			1½	(38)
	150	6	(152)			1⅜	(35)
2"	300 or 600	6½	(165)	1 15/16	(49)	1½	(38)
	900 or 1500	8½	(216)			2⅛	(54)
	150	7½	(191)	2	(51)	1⅝	(41)
3"	300 or 600	8¼	(206)	2 1/16	(52)	1⅞	(47)
	900 or 1500	10½	(267)	2 11/16	(68)	3¼	(82)

Types 103, 203, 303

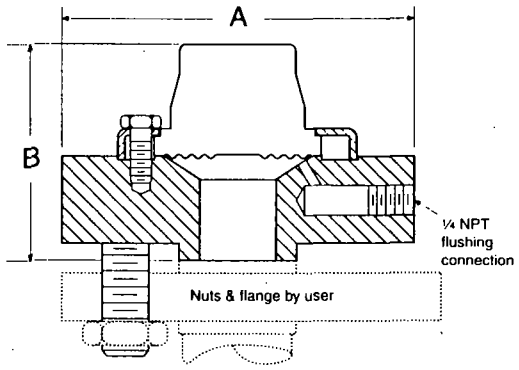

Types 103, 203, 303 – Flanged ½", ¾" with flushing connection

Flange Size	Flange Rating #	A in	A mm	B in	B mm
	150	3½	(89)	2 15/16	(75)
½"	300 or 600	3¾	(95)	3	(76)
	900 or 1500	4¾	(121)	3 3/16	(81)
	150	3⅞	(98)	2 13/16	(71)
¾"	300 or 600	4⅝	(117)	3	(76)
	900 or 1500	5⅛	(130)	3 3/16	(81)

Types 103, 203, 303

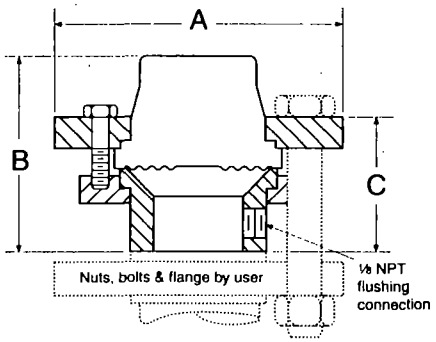

Types 103, 203, 303 – Flanged 1" (raised face only) (two piece bottom housing) with flushing connection

Flange Size	Flange Rating #	A in	A mm	B in	B mm	C in	C mm
	150	4¼	(100)				
1"	300 or 600	5	(127)	2⅞	(73)	1 15/16	(49)
	900 or 1500	6	(152)				

Dimensions

Ashcroft Diaphragm Seals &
Pressure Instrument Isolators

Types 103, 203, 303

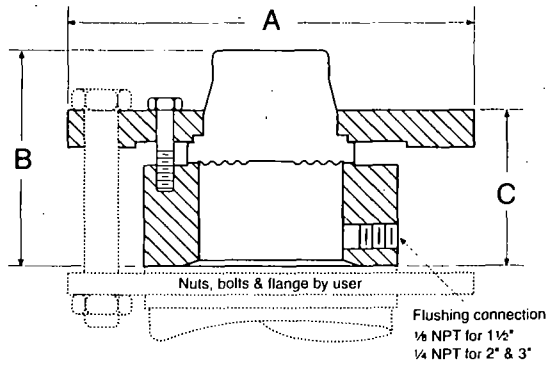

Types 103, 203 303 – Flanged 1½", 2", 3" (raised face only) (one piece bottom housing) with flushing connection

Size	Flange Rating #	A in	A mm	B in	B mm	C in	C mm
1½"	150	5	(127)	3	(76)	2 1/16	(52)
	300 or 600	6¼	(159)				
	900 or 1500	7	(178)				
2"	150	6	(152)	3 11/32	(84)	2⅜	(60)
	300 or 600	6½	(165)				
	900 or 1500	8½	(215)				
3"	150	7½	(191)	3 3/32	(79)	2 7/32	(56)
	300 or 600	8¼	(210)	3 3/16	(81)	2 7/32	(57)
	900	9½	(241)	3 23/32	(94)	2¾	(70)
	1500	10½	(267)				

Types 104, 204, 304

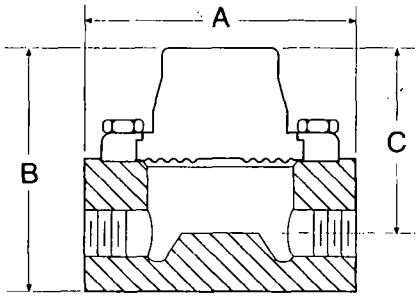

Types 104, 204, 304 – In-Line threaded ¼, ½, ¾, 1 NPT

Process Connection	A in	A mm	B in	B mm	C in	C mm
¼ NPT	4	(102)	2⅝	(67)	2⅛	(54)
½ NPT			3⅝	(92)	2¾	(70)
¾ NPT			3⅞	(98)	3	(76)
1 NPT			3⅞	(98)	3	(76)

Types 105, 205

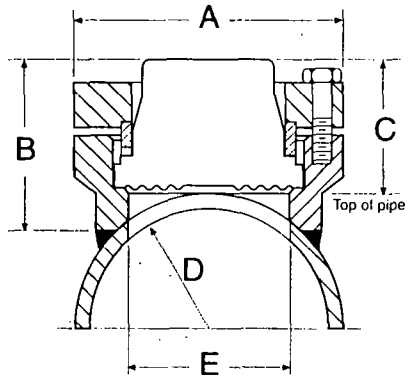

Types 105, 205 – Saddle – 3" Pipe only

A in	A mm	B in	B mm	C in	C mm	D in	D mm	E in	E mm
3½	(89)	2¼	(57)	1⅞	(48)	1¾	(44)	2⅛	(54)

Types 105, 205

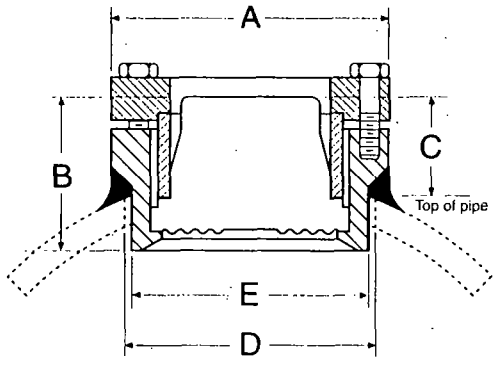

Types 105, 205 – Saddle – 4" Pipe and larger

A in	A mm	B in	B mm	C in	C mm	D in	D mm	E in	E mm
3½	(89)	1 15/16	(50)	1 3/16	(31)	3	(76)	2 31/32	(75)

Types 106, 206

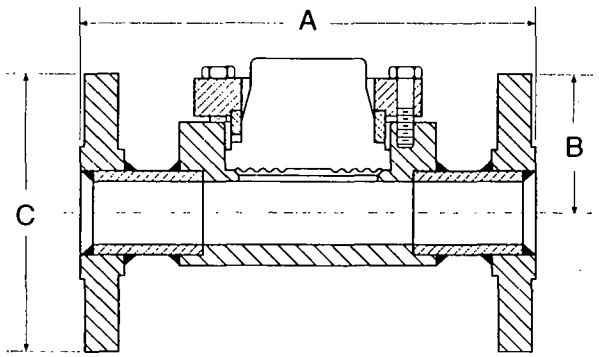

Types 106, 206 In-Line Flanged – ½", 1", 1½", 2", 3"

Flange Size	Flange Rating #	A in	A mm	B in	B mm	C in	C mm
½"	150	7	(178)	2 7/16	(62)	3½	(89)
	300	7	(178)			3⅞	(98)
1"	150	7	(178)	2 7/16	(62)	4¼	(108)
	300	8	(203)			4⅞	(123)
1½"	150	8	(203)	2 11/16	(68)	5	(127)
	300	9	(229)			6⅛	(155)
2"	150	9	(229)	2 15/16	(75)	6	(152)
	300	10	(254)			6½	(165)
3"	150	11	(279)	3 5/8	(92)	7½	(229)
	300	12	(305)			8¼	(254)

Types 106, 206

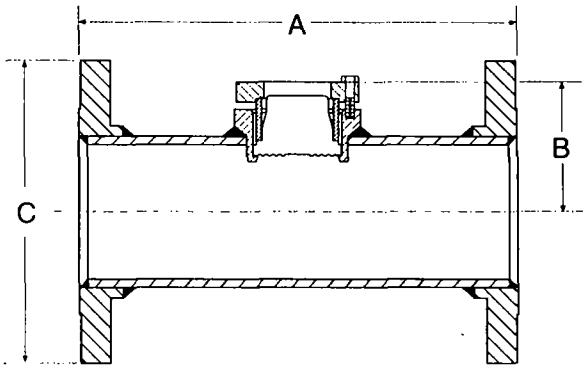

Types 106, 206 In-Line Flanged – 4", 6", 8"

Flange Size	Flange Rating #	A in	A mm	B in	B mm	C in	C mm
4"	150	13	(330)	3⅜	(86)	9	(229)
	300	14	(356)			10	(254)
6"	150	16	(406)	4 7/16	(113)	11	(279)
	300	17	(432)			12½	(318)
8"	150	16	(406)	5 7/16	(138)	13½	(343)

Types 107, 207

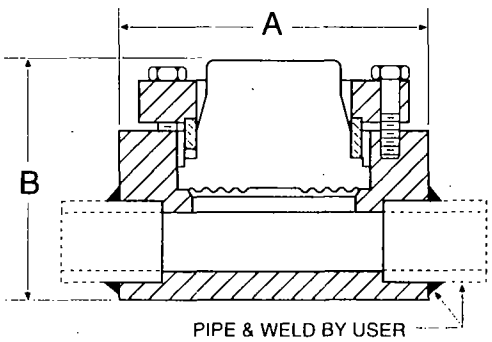

Types 107, 207 – In-Line Welded ¼", ½", ¾", 1", 1½", 2"

Pipe Size	A in	A mm	B in	B mm
¼"	4	(102)	2 11/32	(60)
½", ¾"			2 11/32	(60)
1"			2 15/32	(63)
1½"			2 23/32	(69)
2			2 31/32	(75)

Type 310

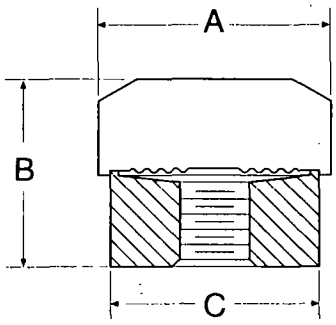

Type 310 Mini-seal – Threaded ¼", ½" NPT

A in	A mm	B in	B mm	C in	C mm
1½	(38)	1 3/16	(30)	1 1/32	(34)

Dimensions

Ashcroft Diaphragm Seals &
Pressure Instrument Isolators

Type 320

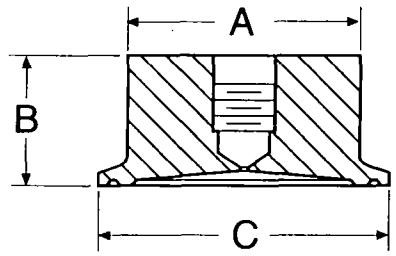

Types 320 – Flanged 1½", 2" Sanitary Seal

Size*	A in		B mm		C in	mm
1½"	1 21/32	(42)	7/8	(22)	2	(50)
2"	2	(51)	1⅛	(29)	2½	(63)

*For Triclover Triclamp

Type 500 All Welded

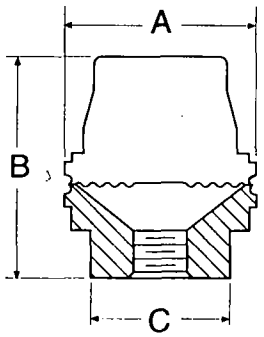

Type 500 All Welded – ¼, ½, ¾, 1 NPT

A in	mm	B in	mm	C in	mm
2½"	(63)	2⅞	(73)	1 13/16	(46)

Type 402, 403

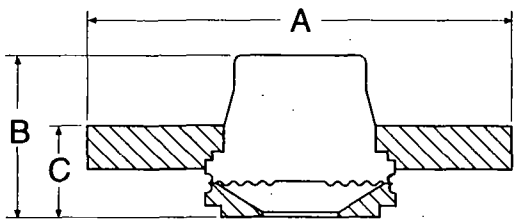

Type 402, 403 Raised Face – Flanged 1", 1½", 2"

Size	Flange Rating #	A in	mm	B in	mm	C in	mm
	150	4¼	(108)			1 3/16	(30)
1"	300 or 600	5	(127)	2⅛	(54)	1¼	(32)
	900 or 1500	6	(152)			1¼	(32)
	150	5	(127)				
1½"	300 or 600	6¼	(159)	2 7/16	(62)	1 9/16	(39)
	900 or 1500	7	(178)				
	150	6	(152)				
2"	300 or 600	6½	(165)	2 15/32	(63)	1⅝	(41)
	900 or 1500	8½	(216)				

Instrument Division Sales and Customer Service Locations

Domestic Headquarters

Stratford, Connecticut
250 E. Main Street
Stratford, CT 06497-5245
Tel: (203) 378-8281
FAX: (203) 385-0499

Domestic Sales Offices

Chicago, Illinois
400 W. Lake Street
Suite 318
Roselle, IL 60172-3392
Tel: (708) 980-9030
FAX: (708) 980-9440

Houston, Texas
3838 North Sam Houston
Parkway East
Suite 120
Houston, TX 77032
Tel: (713) 590-1092
FAX: (713) 590-7100

Los Angeles, California
3931 Mac Arthur Blvd.
Suite 202
Newport Beach, CA 92660
Tel: (714) 852-8948
FAX: (714) 852-8971

Philadelphia, Pennsylvania
Computer Road
P.O. Box 646
Suite A-8
Willow Grove, PA 19090
Tel: (215) 657-2886
FAX: (215) 657-7962

International Headquarters

Stratford, Connecticut
250 E. Main Street
Stratford, CT 06497-5245
Tel: (203) 378-8281
TLX: 475-00171TT
FAX: (203) 385-0357

International Operations

Brazil
Dresser Industria e
Comercio Ltda.
Divisao Manometros Willy
Caixa Postal 212
09510 Sao Caetano do Sul
Sao Paulo, Brazil
Tel: 55 -11-453-5477
FAX: 55-11-453-6778

Canada
Dresser Canada, Inc.
6688 Kitimat Road
Mississauga,
Ontario L5N 1P8
Canada
Tel: 905-826-8411
FAX: 905-826-9106

China
Dresser Trading
Room 5, 23rd Floor
CITIC Bldg.
19 Jianguo Menwai St.
Beijing, P.R.O.C.
Tel: 86-1-500-3139
FAX: 86-1-512-0030

France
Dresser Europe S.A.
Division Instrumentation
29, Rue de Monthléry
F-94563 Rungis Cedex
Silic 192, France
Tel: 33-1-46-87-22-42
FAX: 33-1-46-86-79-83

Germany
Dresser Europe S.A.
Instrument Division
Postfach 11 20
Max-Planck-Str. 1
D-52499 Baesweiler
Germany
Tel: 49-2401-8080
FAX: 49-2401-7027

Japan
Dresser Japan Ltd.
Room 318, Shin Tokyo Building
3-1 Marunouchi 3-Chome,
Chiyoda-ku, Tokyo, Japan
Tel: 813-3201-1501/1506
FAX: 813-3213-6567/6673

Korea
Dresser International S.A.
Korea Office
#2107 Kuk Dong Bldg.
60-1, 3-KA, Choongmu-Ro, Chung-
ku, Seoul, Korea 100-705
Tel: 82-2-274-079-2/3
FAX: 82-2-274-0794

Saudi Arabia
DARVICO
P.O. Box 10145
Jubail Industrial City
Saudi Arabia 31961
Tel: 966-3-341-0278
FAX: 966-3-341-7624

Singapore
Dresser Singapore
Instrument Operations
Block 1004 Toa Payoh North
#07-15/17
Singapore 1231
Tel: 65-252-6602
FAX: 65-252-6603

United Kingdom
Dresser U.K. Ltd.
Rufford Court
Hardwick Grange
Warrington, Cheshire
England WA1 4RF
Tel: 44-925-814545
FAX: 44-925-816378

Venezuela
Manufacturas Petroleras
Venezolanas S.A.
Apartado Postal 617
Maracaibo, Venezuela
Tel: 58-61-412-120
FAX: 58-61-413-954

INSTRUMENT DIVISION DRESSER
STRATFORD OPERATIONS

100MWP 1P-12/94
Specifications subject to change without notice.
Subject to standard terms and conditions of sale.
© Copyright Instrument Division, Dresser Industries Inc., 12/7/94

ASHCROFT®

Duragauge® Pressure Gauge

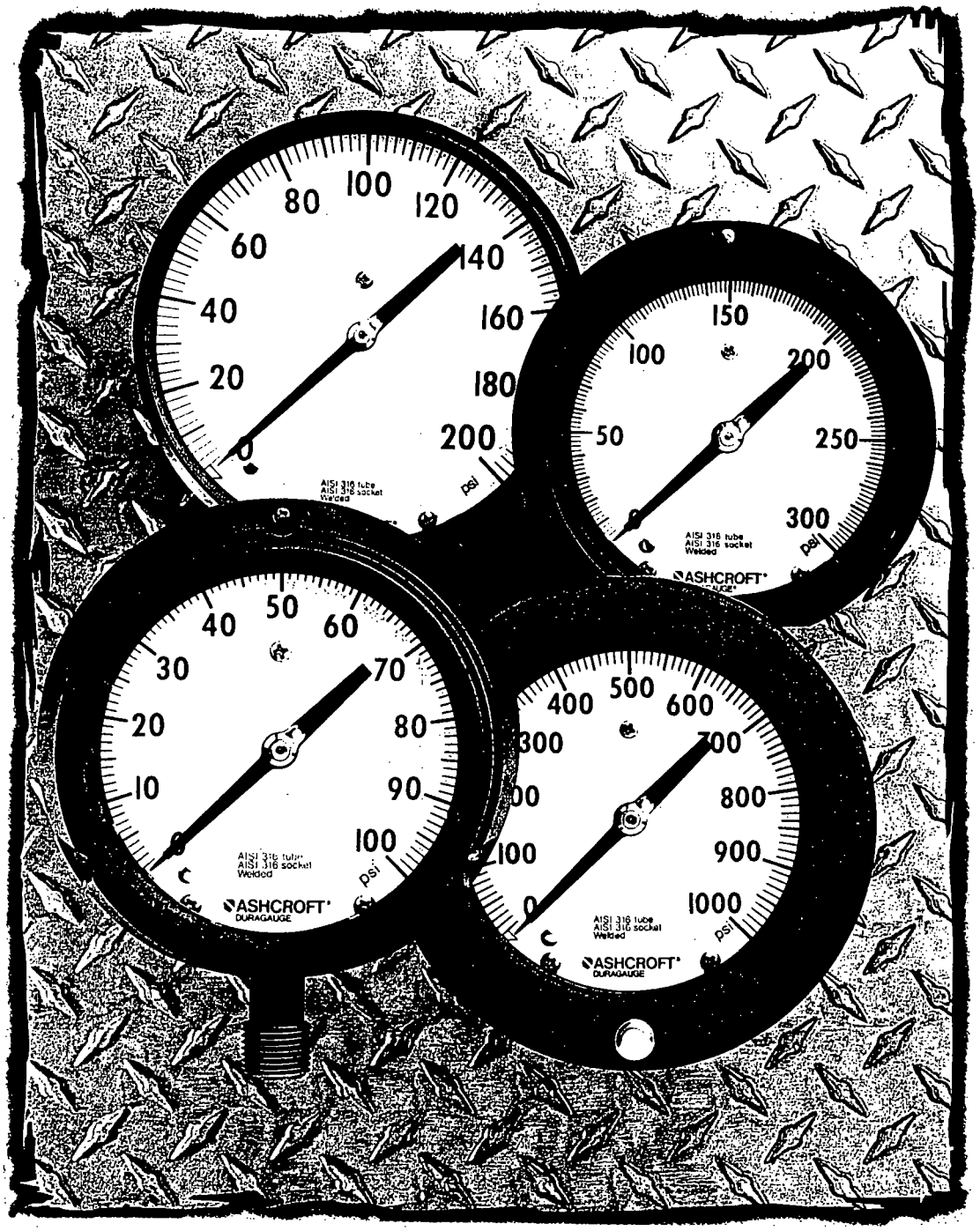

INSTRUMENT DIVISION
STRATFORD OPERATIONS

BULLETIN DU-1

Features & Benefits

Ashcroft Duragauge® Pressure Gauge

The Ashcroft® Duragauge® pressure gauge is the finest production gauge on the market for industrial use where precise indications are required. The product line offers a wide variety of case styles, bourdon tubes and pressure ranges to meet your application needs .

With the component combinations available in the Duragauge gauge line, over ten million variations are possible to serve the needs of all types of industries, including process, power, nuclear, aerospace and cryogenics.

The Duragauge gauge offers the same outstanding quality and craftsmanship which have characterized all Ashcroft products since Edward Ashcroft introduced the bourdon tube pressure gauge to American Industry in 1852. It is built for long life and sustained accuracy under the most adverse operating conditions.

Uncompromising standards have been established for all incoming materials used in Ashcroft products, with dimensional details, material selection and design carefully scrutinized. Tubing used in manufacturing bourdon tubes must meet stringent standards, more restrictive than ASTM material specifications. Throughout production, quality assurance procedures are adhered to, including assembly inspection, and critical laboratory examination.

Product integrity is assured through continual monitoring of pressure element quality. Every bourdon tube system is subjected to a leak test at a pressure above the top of its range. Computer programs yield bourdon tube designs with minimum stresses, assuring the long life and sustained accuracy demanded of Ashcroft products. In the engineering breakdown lab, a variety of tests are run continually on Duragauge bourdon tube systems, such as pulsation, burst, vibration, wear, and friction tests on movements.

Care and attention are given to every product from its inception to final assembly. The end result; thoroughly engineered instruments that assure the user a product that is precise, dependable and durable.

Ashcroft has pioneered the field of gauge manufacture in research and product integrity since the bourdon tube was introduced to American industry. The list of Ashcroft "firsts" in pressure gauge development would fill several

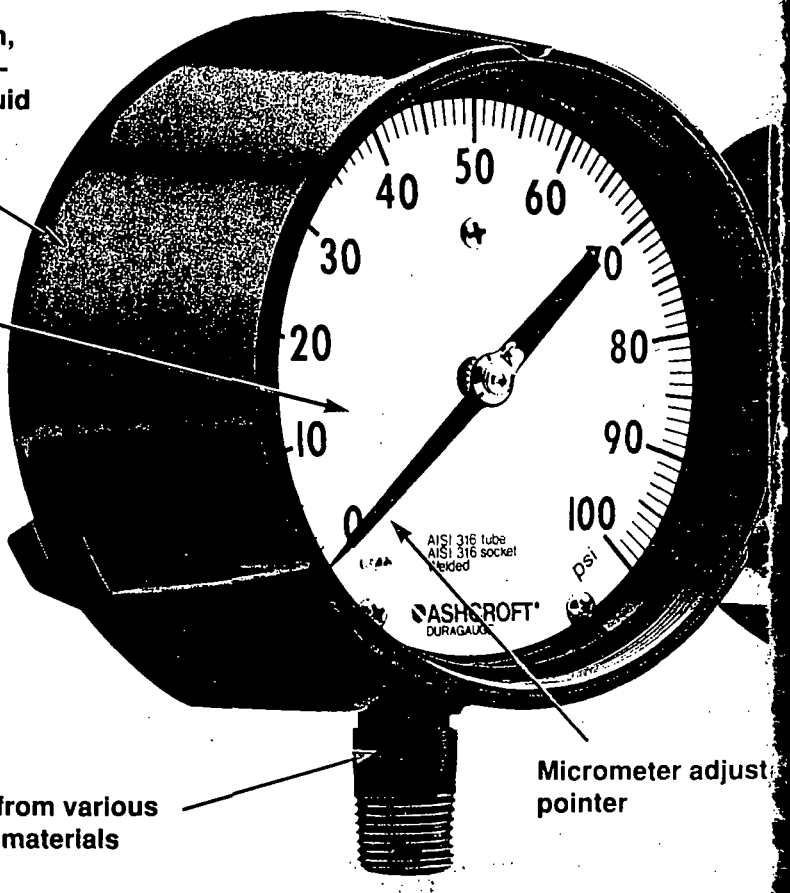

CONTENTS

Page	
2 & 3	Features and benefits
4	Warranty and movement
5	Other Duragauges
6 & 7	Specification matrix
8	Product selection Information
9	Media application table
10 & 11	Range tables
12	Options
13	How to order
14 & 15	Dimensions

pages. They include the rotary geared stainless steel movement, the all 316 stainless steel pressure system, the phenolic turret case, and numerous other improvements.The Ashcroft Duragauge is available in four case styles to suit your application needs.

Several important variables must be considered when selecting the type of case for the application. A gauge is subject to environmental and atmospheric conditions, and the gauge internals must be protected from these elements. To protect the gauge from environmental and atmospheric conditions, the 1279, 1377 and 1379 Duragauges are offered with a standard weatherproof type case. A 4½" 1279 and 4½" or 6" 1379 Duragauge can be ordered hermetically sealed or liquid filled from the factory, or they can be converted in the field to these case styles using a conversion kit.

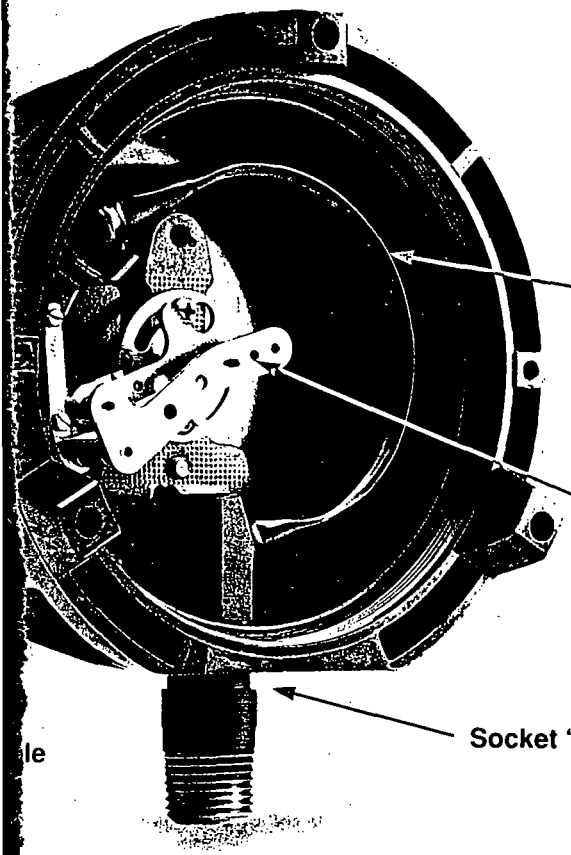

Select from a variety of bourdon tube materials

Rotary geared staked movement

Socket "O" ring standard

le

1279 Case style

The Ashcroft solid front phenolic case 1279 gauge can be hermetically sealed or liquid filled. Available in 4½" dial size this gauge has a threaded reinforced polypropylene front ring for easy zero adjustment with a micrometer adjustable pointer.

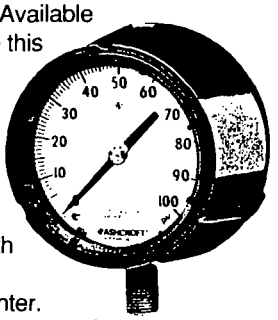

1377 Case style

Designed particularly for flush mounting, the Ashcroft model 1377 is available in 4½", 6", & 8½" dial sizes. The hinged steel black wrinkle enamel coated ring makes this gauge well suited for panel board applications.

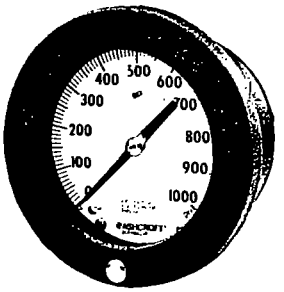

1379 Case style

Available in 4½", 6", & 8½" sizes. The Ashcroft model 1379 solid front gauge has a black epoxy coated aluminum case with a threaded reinforced polypropylene ring. This weatherproof gauge can be liquid filled or hermetically sealed.

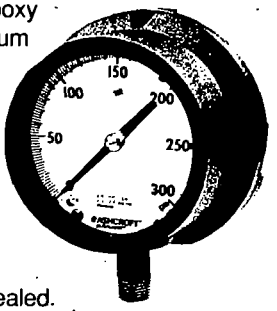

2462 Case style

This high impact resistant polypropylene case gauge and bayonet lock black ring is available with a 6" dial. This Duragauge can be stem, surface, or flush mounted and stands up well in most environments.

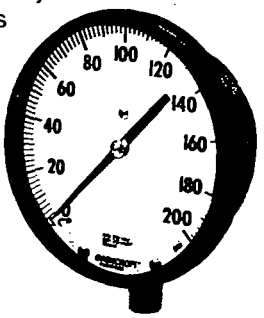

Warranty & Movement

Ashcroft Duragauge® Pressure Gauge

Edward Ashcroft introduced the bourdon tube pressure gauge to American Industry 140 years ago. Since that time, we have developed thousands of improvements and over a hundred patents furthering the development of Ashcroft pressure instruments. From the very beginning, we have maintained our reputation for quality, product performance, and technical innovation that is the envy of all others in the industry. We are confident of our manufacturing processes and the design of our pressure gauge systems. So confident, that we guarantee the Duragauge pressure system to be free of leaks for 10 years when installed and operated with the recommendations outlined in ASME B40.1. Of course our standard 1 year warranty on materials, workmanship, and all other parts, is still in effect.

Millions of Ashcroft Duragauge pressure gauges continue to deliver proven performance in critical process applications throughout the world. You can depend on our commitment to quality – just what you've come to expect from the leader in pressure technology – the people who design, produce, and sell Ashcroft products. For a copy of our warranty call or write:

Dresser Instrument Division
250 East Main Street
Stratford, CT 06497-5145
203-378-8281
Ask for Customer Service.

The Ashcroft® Stainless Steel Rotary Geared Teflon® S Movement is another "first" in gauge manufacture. It is truly innovative with its thinner plates and segment, elimination of bushings, and low friction Teflon S coating on wearing parts. The shock resistance and stability of the Duragauge movement has been enhanced by staking the movement top and bottom plates.

A Teflon S coating is applied to the pinion gear, pinion shaft, link screws and segment shaft. These critical components translate the motion of the bourdon tube tip into the rotating pointer motion. Minimal friction is essential for reduced wear. The coating also serves to protect wear surfaces from outside ambient conditions.

Stainless steel rotary geared Teflon® coated movement

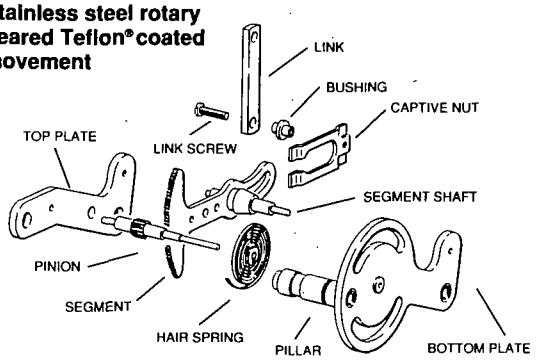

Teflon® - DuPont Trademark

A specially formulated lubricant is applied to all wear points. Wear is further reduced because the moving parts are light weight. The curved tail segment provides easy calibration by minimizing the effect of the span adjustment on zero.

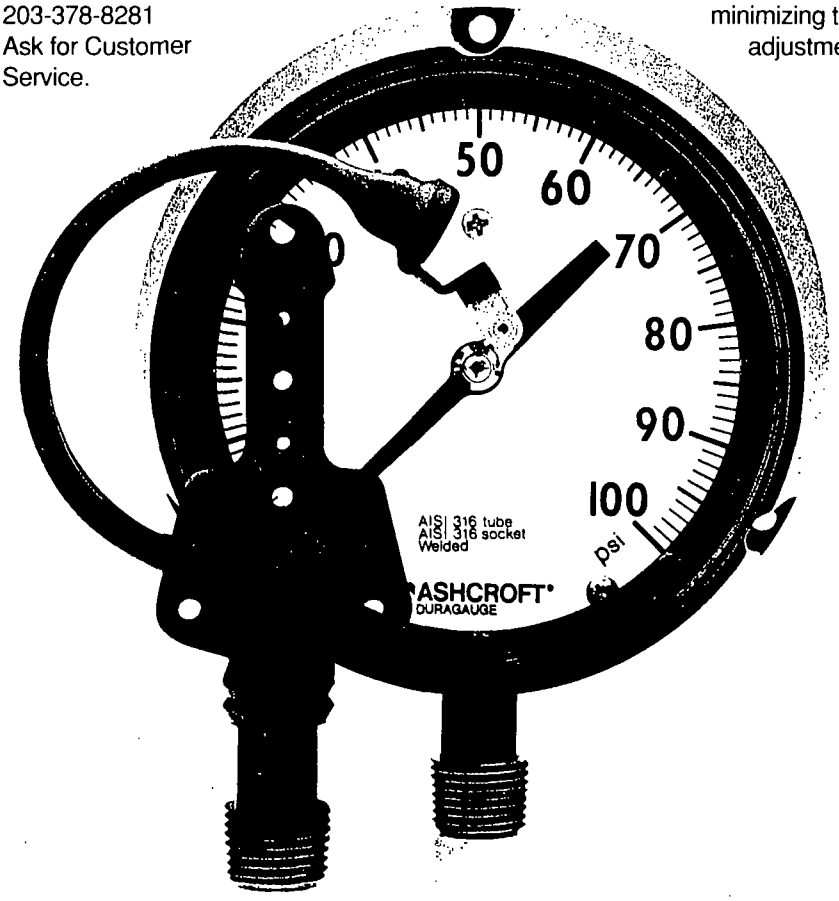

Other Duragauge Types

Ashcroft Duragauge® Pressure Gauge

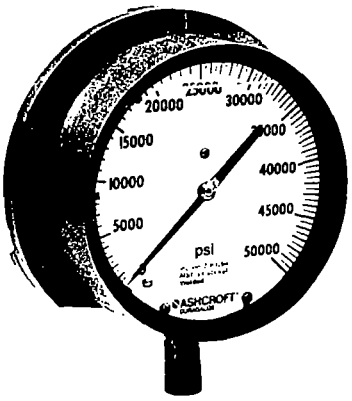

High Pressure Duragauge

The Ashcroft high pressure Duragauge has a helical wound Inconel bourdon tube which is capable of withstanding vibration without a zero shift or change in calibration. Because of the length of the helical tube, stresses are minimized and the tip travel increased; this permits the use of a low ratio movement, which decreases wear from friction and increases gauge life. For use on high pressure test applications, metal and concrete water cutting equipment, and other high pressure applications.

Features of the gauge include ASME B40.1, grade 2A, ½ of 1% full scale, 6" dial, lower or back connection, solid front aluminum case for wall or flush mounting. Inconel 718 bourdon tube and 316 stainless steel socket is standard. A hermetically sealed, field liquid fillable case is standard. The Ashcroft high pressure Duragauge is available in ranges of 50,000 psi, 80,000 psi, and 100,000 psi with a standard ¼" high pressure tubing connection.

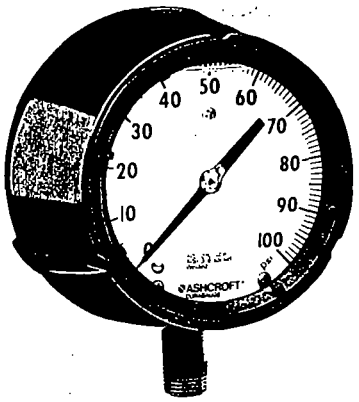

Liquid Filled Duragauge

Liquid filled Duragauges are recommended for applications where there is excessive vibration and pulsation. Vibration can cause rapid movement resulting in loss of accuracy and possibly complete destruction of the gearing. Pulsation can generate millions of pressure cycles causing bourdon tube fatigue and reduced service life. The Ashcroft patented elastomeric back provides compensation for ambient temperature variation while providing all the features of a blow-out back.

The liquid fill in the case continually bathes the movement in a lubricant, reducing wear and dampening excessive motion. The sealed case completely excludes dusty or corrosive environmental conditions. Since vibration and pulsation frequently occur together, all liquid filled Duragauges are fitted with a throttle plug screwed into the socket. This can easily be removed or changed for viscous or particulate containing media. Seven sizes are available from .006 to .070 diameter.

Gauges are normally filled with USP grade glycerin which is suitable for ambient temperatures from 0°F to 250°F (-18°C to +120°). Silicone fill extends this range from -40°F to + 250°F (-40°C to +120°C). Inert Halocarbon® fill is required for application on oxidizing media such as chlorine, oxygen, sulfuric or nitric acids. Operating temperatures are -50°F to +250°F (-45°C to +120°C).

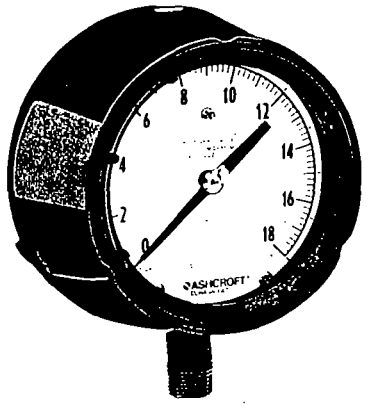

Receiver Gauge Duragauge

Used in conjunction with pneumatic transmitters, Ashcroft receiver gauges indicate pressure, temperature, flow, or any information that can be transmitted by proportional variations in air pressure.

Receiver gauge dials are graduated in terms of the actual process variable, but operate on a transmitted low pressure air signal. Ashcroft Duragauge® receiver gauges are available in all Duragauge case styles with 4½", 6" and 8½" dial sizes. Receiver gauges are available in bronze (standard) or 316 stainless steel. Accuracy is 0.5% ASME, grade 2A.

To minimize the potential for misapplication of a receiver gauge or a false reading dial gauge, a statement relating to maximum input pressure appears in a box on the dial. A receiver gauge uses a low pressure bourdon tube with an input range of 3-15 psi or 3-27 psi and a dial graduated in flow, pressure, level, etc. (e.g., 3-15 psi input, dial graduated 0-100 psi). A false reading dial reads pressure, however, the actual pressure is from a source other than a transmitter and is not limited to low pressures. An example is 3-15 psi input with a dial graduated 0-3000 with no units.

For information concerning other receiver gauges offered, consult Customer Service, Stratford, Connecticut.

Specification Matrix

Ashcroft Duragauge®
Pressure Gauges

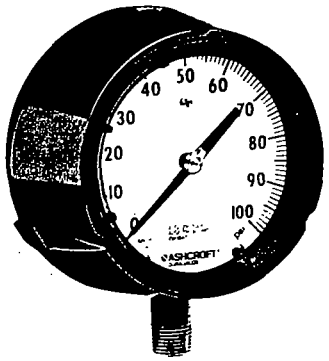

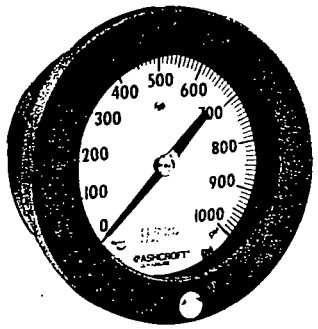

Specifications	Code	Type 1279	Type 1377
Accuracy (ASME B40.1, Grade 2A)		½% Full Scale	½% Full Scale
Case style	(S)	Solid front (S)	Solid front (S)
Case material		Black phenolic	Aluminum, black epoxy coated
Dial size	(45), (60), (85)	4½", (45)	4½", (45), 6", (60), 8", (85)
Ring type		Threaded reinforced black polypropylene	Steel hinged black enamel coated
Bourdon tube		Grade A phosphor bronze	4130 Alloy steel / 316 stain
Socket material		Brass silver brazed	4130 Alloy steel / 1019
Code	(A), (B), (R), (S), (P), (WW)	(A) Available with all case types	(B) Available with all case types / (R) Available wi
Range limits (psi)		Vacuum–1,000	Vacuum–20,000 / Vacuum
Connection size (NPT)	(02), (04), (09)	¼ NPT(02 optional), ½ NPT(04 standard)	¼ NPT(02 optional), ½ NPT(04 standard)
Connection location	(L), (B)	Lower (L), back, (B)	Lower (L), back, (B)
Mounting		Stem, flush, surface	Stem, flush
Movement		Rotary, 400 st. st., Teflon® coated pinion gear & segment	Rotary, 400 st. st., Teflon® coated pinion gear & segment
Window		Glass	Glass
Pointer		Micrometer adjustable	Micrometer adjustable
Options			
Glycerin fill	(L)	Standard	N/A
Silicone fill	(XGV)	Available	N/A
Halocarbon fill	(XGX)	Available	N/A
Hermetically sealed	(H)	Available	N/A
Flush mounting ring	(X56)	Available	Standard
Surface mounting bracket	(XBF)	N/A	N/A
Flush mounting bracket	(XBQ)	N/A	N/A
Duragauge® receiver gauge	(XPR)	Available	Available
Shatterproof glass	(XSG)	Available	Available
Acrylic window	(XPD)	Available	Available
Set hand (red, single, fixed)	(XSH)	Available	Available
Maximum pointer (red)	(XEP)	Available	Available

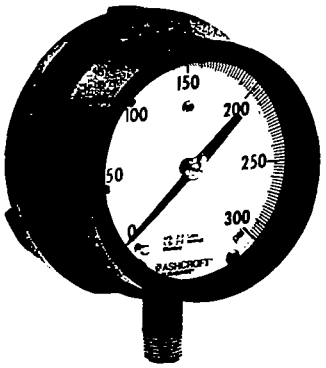

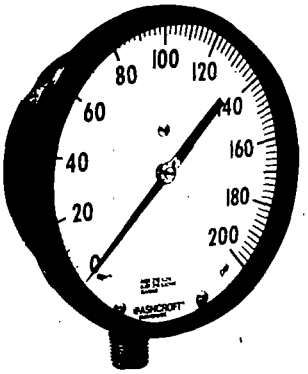

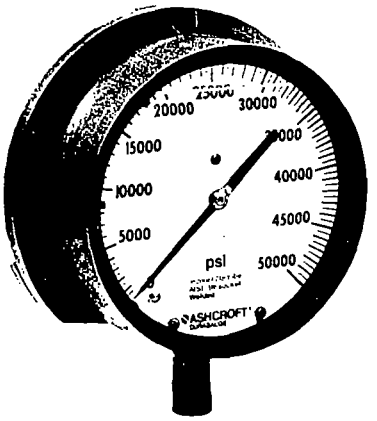

Type 1379	Type 2462	Type 1379 High pressure
½% Full Scale	½ % Full Scale	½% Full Scale
Solid front (S)	Solid front (S)	Solid front (S)
Aluminum, black epoxy coated	Black polypropylene	Aluminum, black epoxy coated
4½" (45,) 6" (60), 8½"(85)	6", (60)	6", (60)
Threaded reinforced black polypropylene	Bayonet lock black polypropylene	Threaded reinforced black polypropylene
less steel	316 stainless steel	K Monel	Inconel 718
steel	316 stainless steel	K Monel	316 stainless steel
th all case types	(S) Available with all case types	(P) Available with all case types	(WW)
–5,000	Vacuum–20,000	Vacuum–30,000	50,000, 80,000, 100,000
¼ NPT(02 optional), ½ NPT(04 standard)	¼ NPT(02 optional), ½ NPT(04 standard)	¼" High pressure (09 standard)
Lower (L), back, (B)	Lower (L), back, (B)	Lower (L), back, (B)
Stem, flush, surface	Stem, flush, surface	Flush, surface
Rotary, 400 st. st., Teflon® coated pinion gear & segment	Rotary, 400 st. st., Teflon® coated pinion gear & segment	Rotary, 400 st. st., Teflon® coated pinion gear & segment
Glass	Glass	Acrylic
Micrometer adjustable	Micrometer adjustable	Micrometer adjustable
Standard	N/A	Available
Available	N/A	Available
Available	N/A	Available
Available	N/A	Standard
Available	N/A	Available
N/A	Available	N/A
N/A	Available	N/A
Available	Available	N/A
Available	Available	Available
Available	Available	Standard
Available	Available	Available
Available	Available	Available

Product Selection Information

Ashcroft Duragauge® Pressure Gauge

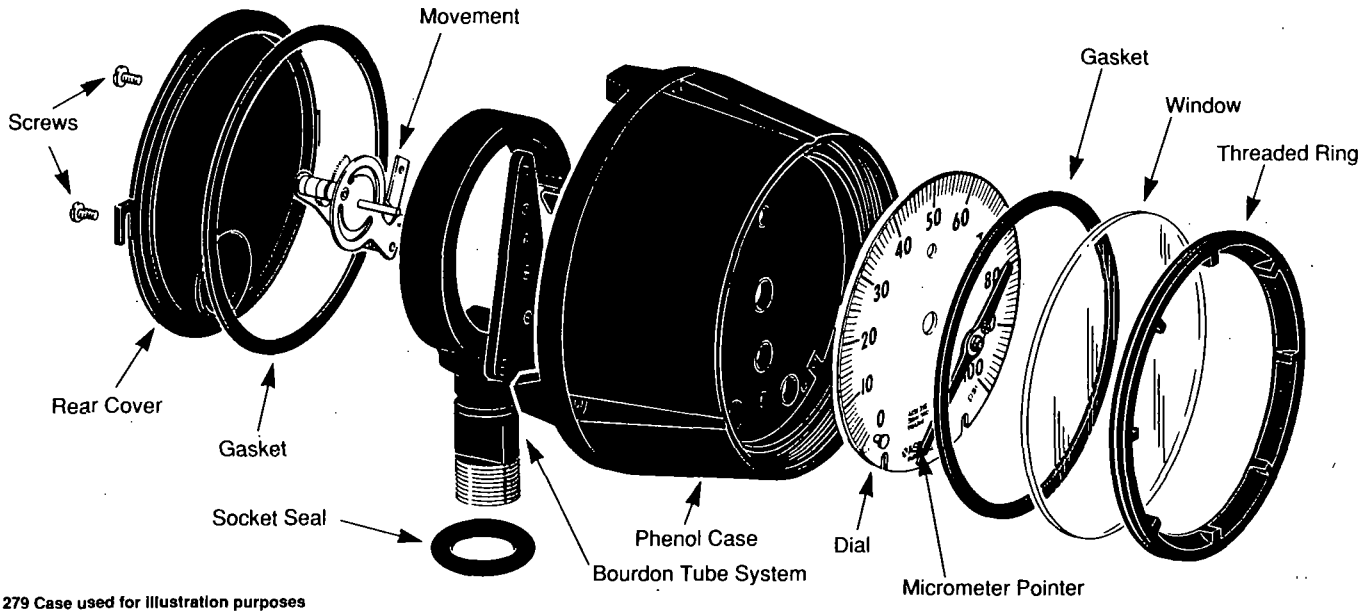

1279 Case used for illustration purposes

Consult ASME B40.1 for guidance in gauge selection

WARNING: To prevent misapplication, pressure gauges should be selected considering media and ambient operating conditions. Improper application can be detrimental to the gauge, causing failure and possible personal injury or property damage. The information contained in this catalog is offered as a guide to assist in making the proper selection of a pressure gauge. Additional information is available from Dresser Instrument Division.

Pressure Ranges:

As recommended by ASME B40.1, select a gauge with a full scale pressure range of approximately twice the normal operating pressure. The maximum operating pressure should not exceed approximately 75% of the full scale range. Failure to select a gauge range within these criteria may ultimately result in fatigue failure of the bourdon tube.

Operating Conditions:

The operating conditions to which a gauge will be subjected must be considered. If the gauge will be subjected to severe vibrations or pressure pulsation, liquid filling the gauge may be necessary to obtain normal product life. Other than discoloration of the dial and hardening of the gasketing that may occur as ambient temperatures exceed 150°F, metal case Duragauges (that are not liquid filled) can withstand continuous ambient temperatures as high as 350°F. All gauges can withstand ambient temperatures up to 250°F. Accuracy will be affected by approximately 1.5% per 100°F. Gauges with welded joints will withstand 750°F (450°F with silver brazed joints) for short times without rupture, although other parts of the gauge will be destroyed and calibration will be lost. Proper selection of the bourdon system material is dependent on the process fluid to which the system will be subjected. If the correct material is not available, the use of a diaphragm seal may be necessary to protect the system from the process fluid. Liquid filled gauges are recommended for the discharge side of positive displacement pumps.

Pressure Elements:

Available in a wide variety of materials, including: phosphor bronze, alloy steel, 316 stainless steel, K Monel and Inconel.

Cases:

Four solid front case types are offered. Solid front cases have a solid wall between the bourdon tube and the window. The 1279 & 1379 Duragauge cases are field convertible by means of a kit. These gauges can be converted to hermetically sealed or liquid filled. Buna-N seals at the front and rear of the case provide resistance to aggressive atmospheres.

Rings:

The ring, which retains the window, is threaded, bayonet (cam), or hinged, depending upon case type.

Movements:

Movements are designed and materials of construction selected to reduce friction and extend wear life. The Duragauge gauge's stainless steel movement is a rotary geared design with Teflon coated wear parts.

Dials:

Dials are uniformly graduated and have highly legible black markings. A pointer dial stop pin at the 7:00 o'clock position is standard.

Windows:

The standard is glass on dry gauges and acrylic on liquid filled gauges. Options are laminated safety glass, non-glare glass or acrylic.

Pointers:

Duragauge pressure gauges have balanced micrometer adjustable pointers which can be repositioned without removal from the pinion shaft.

Viton* . Teflon* . Kalrez* .Kynar* – DuPont Trademark
Carpenter 20* – Carpenter Steel Trademark
Inconel*, Monel* – Huntington Alloys Inc. Trademark
Hastelloy – Cabot Corp. Trademark
Nickel* – International Nickel Co., Inc. Trademark
Halocarbon* – Halocarbon Products Co. Trademark

Media Application Table

Ashcroft Duragauge® Pressure Gauge

The media being measured must be compatible with the wetted parts of the pressure instrument. To use the chart below, locate the media whose pressure is to be measured and select a suitable material from those available. Diaphragm seal information is contained in Bulletin DS-1. This is a simplified chart and assumes the media temperature is below 200°F except for media with an * which must be below 100°F. Throttling devices and/or a liquid filled instrument are recommended in applications with pulsation or vibration. These recommendations are only a guide, as service life is dependent on temperature, concentrations, catalysts that may be added, or other conditions beyond our control. Consult Stratford, CT. customer service for specific applications and for any media not listed.

Media Application	Pressure Instrument Material				
	Brass or bronze	Steel	Stainless steel	Monel	Diaphragm seals**
Acetone*	•		•	•	
Acetic Acid <40%			•		
Acetic Anhydride					•
Acetylene (Dry)		•	•		
Acrolein 100%					•
Air	•	•	•	•	
Alcohol, Ethyl	•		•	•	
Alum. Chloride >10%					•
Alum. Sulfate 10-50%			•		
Ammonia Gas (Dry)		•	•		
Ammonium Chloride <40%					•
Ammonium Nitrate <50%			•		
Ammonium Sulfate <60%					•
Aniline>99%			•		
Argon	•	•	•	•	
Beer			•		
Benzidine >99%					•
Benzene <50%			•	•	
Benzoic Acid <70%					•
Boric Acid <25%			•		
Bromine (Dry)					•
Butane	•	•	•	•	
Butyric Acid <10%			•		
Calcium Chloride <80%					•
Calcium Hydroxide <50%					•
Carbon Dioxide	•	•	•	•	
Carbon Monoxide >99%	•	•	•	•	
Chlorine (Dry)					•
Chlorine (Moist)*					•
Chloroform (Dry)			•	•	
Chromic Acid					•
Citric Acid 10-50%			•		
Corn Oil			•		

Media Application	Pressure Instrument Material				
	Brass or bronze	Steel	Stainless steel	Monel	Diaphragm seals**
Crude Oil (Sour)				•	
Crude Oil (Sweet)			•	•	
Ethyl Acetate	•		•	•	
Ethylene Oxide >99%	•		•	•	
Ferric Chloride <40%					•
Ferric Sulfate <10%*			•		
Ferrous Chloride <30%					•
Ferrous Sulfate <50%					•
Fluorine Gas (Dry)			•	•	
Formaldehyde <95%			•	•	
Formic Acid*					•
Freons			•		
Furfural <10%					•
Gasoline			•		
Glycerin >99%	•	•	•	•	
Hydrobromic Acid					•
Hydrochloric Acid					•
Hydrofluoric Acid					•
Hydrofluosilic Acid					•
Hydrogen ❶	•		•		
Hydrogen Peroxide <50%			•		
Kerosene	•	•	•	•	
Lactic Acid <70%*			•		
Magnesium Chloride <40%					•
Mercuric Chloride <60%					•
Mercury >99%		•	•		
Milk			•		
Naphtha >99%	•	•	•	•	
Naphthalene >99%			•		
Nickel Chloride >99%					•
Nitric Acid <95%*			•		
Nitrogen	•	•	•	•	
Oleic Acid	•				

Media Application	Pressure Instrument Material				
	Brass or bronze	Steel	Stainless steel	Monel	Diaphragm seals**
Oxalic Acid *					•
Oxygen (Gas)❷	•		•	•	
Palmitic Acid >99%*			•		
Phosphoric Acid <80%*			•		
Picric Acid <10%			•		
Propane (Dry)		•	•	•	
Sea Water (Flowing)				•	
Silver Nitrate <70%					•
Sodium Bicarbonate <20%			•	•	
Sodium Bisulfate <30%					•
Sodium Carbonate <40%				•	
Sodium Chromate <60%	•	•	•	•	
Sodium Cyanide *		•	•		
Sodium Hydroxide < 40%				•	
Sodium Hypochlorite <25%					•
Sodium Phosphate, Tri <60%		•	•	•	
Sodium Silicate <50%		•	•	•	
Sodium Sulfide <50%					•
Stannous Chloride <10%					•
Steam (Use siphon)	•	•	•	•	
Stearic Acid			•	•	
Sulfur Dioxide (Dry) >99%					•
Sulfur Trioxide (Dry) >99%					•
Sulfurous Acid					•
Tannic Acid <80%	•	•	•	•	
Tartaric Acid <50%			•	•	
Tin Chloride (ous) <10%					•
Toluene >99%	•	•	•	•	
Turpentine >98%	•		•	•	
Water (Tap)	•		•	•	
Whiskey			•		
Zinc Chloride <25%*					•
Zinc Sulphate <40%					•

❶ Over 1,000 psi–entire system must be 316 stainless steel.

❷ Bronze and 316 stainless steel are acceptable for oxygen service, provided the instrument has been cleaned for oxygen service and is free from oil.

* Below 100°F

* * Any standard bourdon tube material may be used in conjunction with a diaphragm seal, but the gauge selection should take into consideration the corrosive environment in which it is to operate. For Diaphragm Seals See Bulletin DS-1.

Range Tables

Ashcroft Duragauge® Pressure Gauge

Standard Ranges

Pressure – psi

Range	Figure interval	Minor graduation
0/15	1	0.1
0/30	5	0.2
0/60	5	0.5
0/100	10	1
0/160	20	1
0/200	20	2
0/300	50	2
0/400	50	5
0/600	50	5
0/800	100	10
0/1,000	100	10
0/1,500	200	20
0/2,000	200	20
0/3,000	500	20
0/5,000	500	50
0/10,000	1,000	100
0/20,000	2,000	200
0/30,000	5,000	200
0/50,000	5,000	500
0/80,000	10,000	1,000
0/100,000	10,000	1,000

Compound

Range	Figure interval		Minor graduation	
	in Hg	psi	in Hg	psi
30" Hg/15 psi	5	3	0.5	0.2
30" Hg/30 psi	10	5	1	0.5
30" Hg/60 psi	10	10	1	1
30" Hg/100 psi	10	10	2	1
30" Hg/150 psi	10	20	5	2
30" Hg/300 psi	30	25	5	2

Combination

Range		Figure interval		Minor graduation	
inner–psi	outer–ft H_2O	psi	ft H_2O	psi	ft H_2O
0/15	0/34	3	5	0.5	0.5
0/30	0/70	5	10	0.5	1
0/60	0/140	5	20	0.5	5
0/100	0/230	10	20	1	2
0/160	0/370	20	50	2	5
0/200	0/460	20	50	5	5
0/300	0/690	25	100	5	10

Vacuum

Range	Figure interval	Minor graduation
30/0 in Hg	5 in	0.2 in
34/0 ft H_2O	5 ft	0.5 ft

Retard

Range	Figure interval	Minor graduation
0/15 psi retard to 30 psi	1 psi–30 psi	0.1 psi–5 psi
0/30 psi retard to 60 psi	2 psi–60 psi	0.2 psi–10 psi
0/60 psi retard to 100 psi	2 psi–100 psi	0.5 psi–10 psi
30" Hg vac/75 psi retard to 150 psi	5" Hg/15 psi–150 psi	1" Hg/1 psi–5psi
10" Hg vac/5 psi retard to 30" Hg vac retard to 30 psi	2" Hg/1 psi 30" Hg 30 psi	0.2" Hg/0.1 psi 5" Hg 5 psi

Metric Ranges

Pressure – kg/cm² and bar

Range	Figure interval	Minor graduation	Outer scale in psi
0/1	0.1	0.01	0/14
0/1.6	0.2	0.02	0/22
0/2.5	0.5	0.02	0/35
0/4	0.5	0.05	0/55
0/6	0.5	0.05	0/85
0/10	1	0.1	0/140
0/16	2	0.2	0/220
0/25	5	0.2	0/350
0/40	5	0.5	0/550
0/60	5	0.5	0/850
0/100	10	1	0/1,400
0/160	20	2	0/2,200
0/250	50	2	0/3,500
0/400	50	5	0/5,500
0/600	50	5	0/8,500
0/1,000	100	10	0/14,000
0/1,600	200	20	0/22,000
0/2,500	500	20	0/35,000
0/4,000	500	50	0/55,000
0/6,000	1,000	50	0/85,000

Compound – kg/cm² and bar

Range	Figure interval	Minor graduation	Outer scale in psi
-1/0/1.5	0.5	0.02	30" Hg/20
-1/0/3	0.5	0.05	30" Hg/40
-1/0/5	0.5	0.05	30" Hg/70
-1/0/9	1	0.01	30" Hg/125
-1/0/15	2	0.02	30" Hg/215
-1/0/24	5	0.02	30" Hg/340

Vacuum – kg/cm² and bar

Range	Figure interval	Minor graduation	Outer scale
-1/0	0.1	0.01	30" Hg

Graduations & figure intervals

All Ashcroft dials have various total graduation marks, figure intervals and minor graduations. Standard dual scale metric ranges have a dominant metric inner scale. The outer scale is specified in psi. Some examples are shown. Duragauge gauges are made in accordance with ASME B40.1 entitled, "Gauges, Pressure, Indicating Dial Type–Elastic Element", Accuracy grade 2A (±0.5% of span). The accuracy of a retard range gauge applies only to the expanded portion of the scale. The error in the compressed portion is -10% to +20% of the span. Maximum pressure at which a gauge is continually operated should not exceed 75% of full scale range. Consult customer service in Stratford, CT. for non-standard dials.

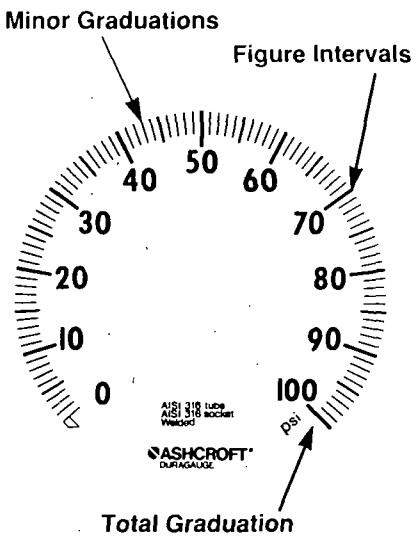

Range Tables

Ashcroft Duragauge® Pressure Gauge

Metric Ranges

Pressure – (kPa) kilopascal

Outer scale	Range interval	Figure graduation	Minor in psi
0/100	10	1	0/14
0/160	20	2	0/22
0/250	50	2	0/35
0/400	50	5	0/55
0/600	50	5	0/85
0/1,000	100	10	0/140
0/1,600	200	20	0/220
0/2,500	500	20	0/350
0/4,000	500	50	0/550
0/6,000	500	50	0/850
0/10,000	1,000	100	0/1,400
0/16,000	2,000	200	0/2,200
0/25,000	5,000	200	0/3,500
0/40,000	5,000	500	0/5,500
0/60,000	5,000	500	0/8,500
0/100,000	10,000	1,000	0/14,000
0/160,000	20,000	2,000	0/22,000
0/250,000	50,000	2,000	0/35,000
0/400,000	50,000	5,000	0/55,000

Compound – (kPa) kilopascal

Outer scale	Range interval	Figure graduation	Minor in psi
-1/0/1.5	0.5	0.02	30" Hg/20
-1/0/3	0.5	0.05	30" Hg/40
-1/0/5	0.5	0.05	30" Hg/70
-1/0/9	1	0.01	30" Hg/125
-1/0/15	2	0.02	30" Hg/215

Vacuum – (kPa) kilopascal

Range	Figure interval	Minor graduation	Outer scale
-1/0	0.1	0.01	30" Hg

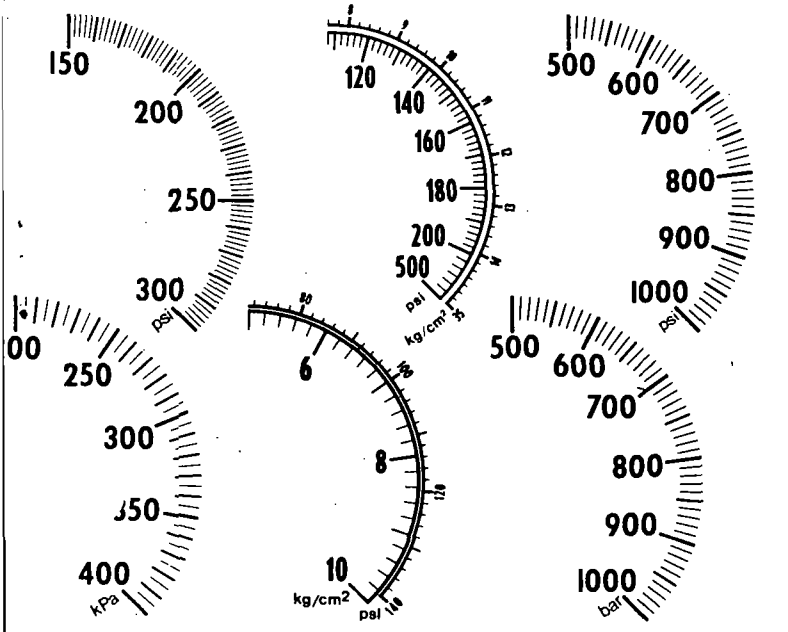

Receiver gauge

These ranges apply to any unit of pressure, temperature, liquid level, flow, or other value specified. Units in psi pressure will be denoted on the dial unless specified. Available with input ranges of 3-15 psi or 3-27 psi.

Receiver Gauge Ranges

0/1	0/75	30/80	100/600
0/2	0/80	5/110	200/700
0/3	0/85	20/120	100/800
0/4	0/90	40/120	200/800
0/5	0/95	20/150	300/800
0/6	0/100	30/150	400/800
0/7	0/120	40/150	450/800
0/8	0/140	50/150	500/800
0/9	0/160	30/180	650/800
0/10	0/180	130/180	200/900
0/11	0/200	100/200	400/900
0/12	0/250	20/220	700/900
0/14	0/300	40/220	200/1,000
0/15	0/350	30/240	400/1,000
0/16	0/400	100/240	500/1,000
0/17	0/500	30/250	600/1,000
0/18	0/600	50/250	800/1,000
0/19	0/700	100/250	200/1,100
0/20	0/760	30/300	400/1,200
0/21	0/800	50/300	500/1,200
0/25	0/900	80/300	600/1,200
0/26	0/1,000	100/300	1,000/1,500
0/28	0/1,500	50/350	300/1,600
0/30	0/2,000	80/350	1,000/1,600
0/35	0/3,000	150/350	600/1,800
0/40	0/4,000	100/400	900/1,800
0/45	0/5,000	150/400	1,200/1,800
0/50	0/10,000	50/500	700/2,000
0/55	0/15,000	100/500	1,000/2,500
0/60	0/20,000	200/500	1,500/2,500
0/65	0/30,000	300/500	900/3,000
0/70	0/50,000	200/700	1,500/3,000

Square Root Ranges

0/5	0/70	0/300	0/1,500
0/10	0/80	0/350	0/2,000
0/15	0/90	0/400	0/3,000
0/20	0/100	0/500	0/4,000
0/25	0/125	0/600	0/5,000
0/30	0/150	0/700	0/10,000
0/40	0/175	0/800	
0/50	0/200	0/900	
0/60	0/250	0/1,000	

Compound Ranges

30" Hg/0/15 psi	30" Hg/0/150 psi
30" Hg/0/30 psi	30" Hg/0/500 psi
30" Hg/0/60 psi	30" Hg/0/800 psi
30" Hg/0/100 psi	

Options

Ashcroft Duragauge® Pressure Gauge

Case and ring options	Code	Comments
Hermetically Sealed Case	H	Available on types 4½" 1279 and 4½", 6" 1379 models only.
Gauge Heater	HD	Used for outdoor applications or other services where ambient temperatures are -50°F. Available on 4½", 6" 1377 and 1379 models only.
Flush Mounting Ring - Steel, Black Epoxy	56	Available on 4½" 1279 and 4½", 6" 1379 models only. (also called 1278 flush mounting ring)
Flush Mounting Ring - Stainless steel, Polished	57	Available on 4½" 1279 and 4½", 6" 1379 models only. (also called 1278 flush mounting ring)
Bourdon tube and system assembly options		
AND10050-4 (¼" Tubing Conn.)	AM	
¼" High Pressure Tubing Conn.	09	Standard on ranges 30,000 psi and up.
Overload Stop	OS	Used to protect the gauge against extreme pressures.
Underload Stop	VS	Used to protect low pressure gauges against vacuum.
Throttle Screws - Brass, stainless steel & Monel	TS	0.031" Standard. Other sizes: .006, .0135, .020, .040, .050 and .070. (Monel .040 only)
Capillary Bleeder	BG	Available in model 1379, 4½" Lower conn. only with stainless steel system. Max. pressure 1,000 psi.
Tip Bleeder	TB	Available in bronze, St. St. or Monel bourdon tube gauges only. Max. pressure 15,000 psi.
Cleaning for Gaseous Oxygen	6B	Not available with steel bourdon tube. If gauge is liquid filled specify Halocarbon as the fill.
Cleaning for Liquid Oxygen Service	6D	
Free from Mercury Contamination	MF	Provided with free from mercury contamination certification (CD-2)
Link options		
Slotted Link for Sudden Pressure Increase	RJ	Unless specified, slotted link set for pressure increase. Accuracy 1% F.S. with slotted link
Slotted Link for Sudden Pressure Decrease	S4	
Liquid filling options		
Silicone Fill	GV	
Halocarbon Fill	GX	For oxidixing media. Examples; chlorine, oxygen, nitric acid & sulfuric acid.
Pointer options		
Red Set Hand (Single)	SH	Single stationary set hand used to indicate a specific pressure.
Red Set Hand (Double)	SJ	Double stationary set hand used to indicate 2 specific pressures.
Red Set Hand (Adjustable)	EO	Internally adjustable.
Maximum Pointer	EP	Externally reset by a knob on outside of an acrylic window.
Minimum Pointer	EQ	Externally reset by a knob on outside of an acrylic window.
Window options		
Acrylic Window	PD	Ambient temperature limits -50/180 degrees F.
Laminated Safety Glass	SG	Ambient temperature limits -50/200 degrees F.
Non Glare Glass	NG	Ambient temperature limits -50/350 degrees F.
Marking and tagging options		
Dial Marking	DA	Service marking printed on dial.
Paper Tagging of Carton and Gauge	NN	Tag is bonded to gauge case and carton.
Stainless Steel Tagging of Gauge Case	NH	300 series stainless steel tag is wired to gauge case.
Calibration options		
Calibrate to Absolute Pressure	AB	
Test and certificate options		
Mass Spectrometer Leak Test	ML	
Special Certificate of Conformance	CD-1A	Non standard certificate of conformance
Certificate of Conformance	CD-1	Conformance to specifications and/or drawings.
Free From Mercury Contamination	CD-2	Conformance to specifications and/or drawings and free from mercury contamination.
Individual Certified Calibration Chart	CD-4	

How to Order

Ashcroft Duragauge® Pressure Gauge

Table A – Case selection & mounting

Dial Size (in)	Ordering Code	Case Type	Case: Material Finish	Ring: Style Material Finish	Mounting/Connection
4½	(45)	1279[1]	Phenolic (Black)	Threaded Reinforced Polypropylene (Black)	Stem– Lower or back Surface– Lower or back Flush– Back: Specify X56
4½ 6, 8½	(45)(60)(85)	1377	Aluminum Black epoxy coating	Hinged Steel Black wrinkle enamel coat	Flush– Back Stem– Lower or back
4½ 6, 8½	(45)(60)(85)	1379[1]	Aluminum Black epoxy coating	4½", 6" Threaded reinforced polypropylene 8½ Hinged steel, black wrinkle enamel coat	Stem– Lower or back Surface– Lower or back Flush– Back, specify X56 8½ standard
6	(45)	2462	Polypropylene (fiberglass reinforced) (Black)	Bayonet lock Polypropylene (Black)	Stem– Lower or back Surface– Lower or back, specify XBF Flush– Back, specify XBQ
6	(60)	1379 (high pressure)	Aluminum Black epoxy coating	6" Threaded reinforced polypropylene	Flush– Lower or back Surface– Lower or back

Table B – System, connection & location

Bourdon Tube & Tip Material [2] (all joints TIG welded except code "A")	Socket Material[2]	Tube & Socket Code	Case Style & Code	NPT Conn. & Code	Conn. Location & Code	Range Selection Limits (psi)
C510 Grade A Phosphor Bronze Tube Brass Tip, Silver Brazed	Brass	(A)	(S) Solid Front	(04) ½	Lower (L) or Back (B)	Vac/1,000
4130 alloy steel	1018 steel	(B)	(S) Solid Front	(STD)		Vac/5,000
316 stainless steel	1018 steel	(R)	(S) Solid Front	(02) ¼		Vac/20,000
316 stainless steel	316 stainless steel	(S)	(S) Solid Front	(OPT)		Vac/20,000
K 500 Monel*[3]	Monel 400	(P)	(S) Solid Front			Vac/30,000
Inconel 718*	316 stainless steel	(WW)	(SH) Solid Front Herm. Sealed	(09) ¼ High Pres.		50,000/80,000/100,000

NOTES:

(1) Liquid fillable or hermetically sealed when 1280 kit is specified.

(2) For selection of the correct bourdon system material, see the media application table on page 9.

(3) Use on applications where NACE MR-01-75 is specified for selection of the correct bourdon system material. See the media selection table on page 9.

To order a Duragauge (sample coding shown)

Select:	45	1279	RS*	04L	XXX	0/2,000 psi

1. Dial size–4½"
2. Case type–1279
3. Bourdon tube and socket code
4. Connection–¼ NPT (02), ½ NPT (04), Lower (L), Back(B)
5. Optional features
6. Pressure range (see range tables on pages 10 & 11)

(*) "S" denotes solid front case design

Dimensions

Ashcroft Duragauge® Pressure Gauge

Case Type 1279

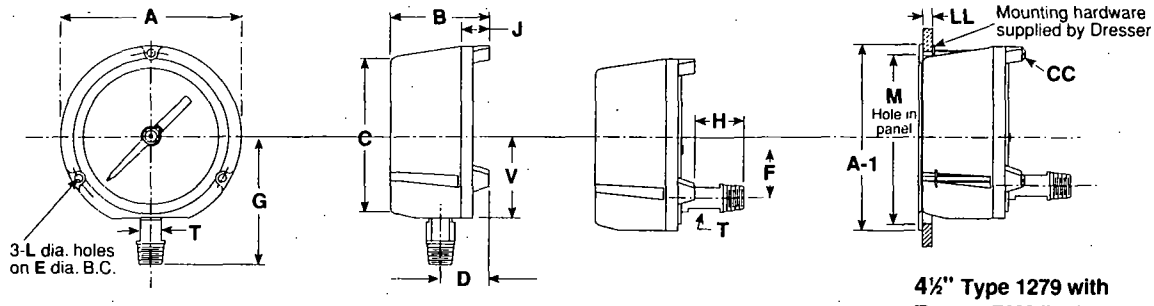

4½" Lower Connection

4½" Back Connection

4½" Type 1279 with Type 1278M flush mounting ring

Dial Size Inches	A	B	C	D	E	F	G	H	J	L	T	V	Weight (lbs)
4½	5 13/16 (148)	3⅜ (86)	5 1/16 (129)	1⅝ (41)	5⅜ (137)	1⅝ (41)	3 15/16 (100)	¾ (20)	1 (25)	.218 (6)	½ (13)	2⅝ (67)	2½

Type 1278 Flush Mounting Ring Gauge Type	A-1	M	CC	LL
4½" Types 1279 & 1379	6 (152)	5⅝ (143)	#10-24	1/8 – 5/16 (3) – (8)
6" Type 1379	7 49/64 (197)	7¼ (184)	¼-20	1/8 – 5/16 (3) – (8)

Case Type 1377

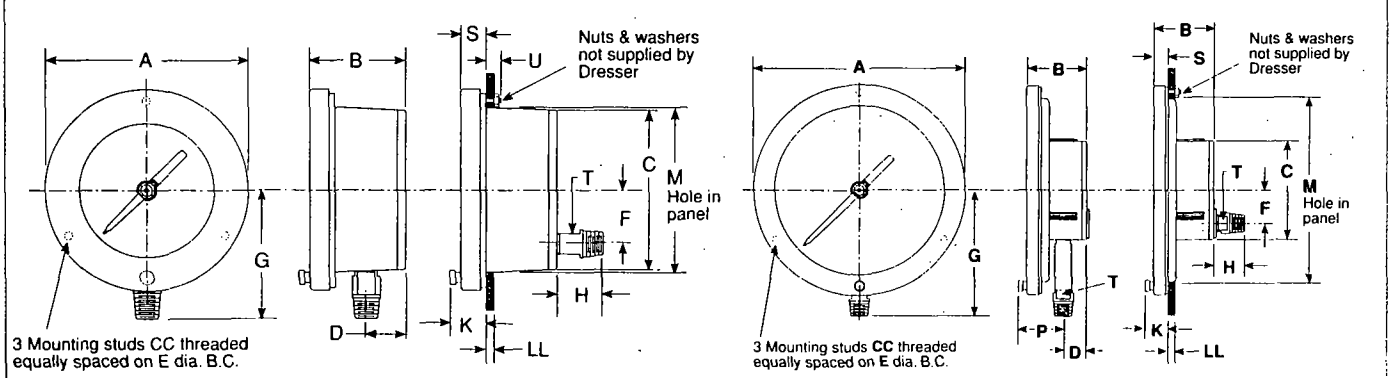

4½" & 6" Lower Connection

4½" & 6" Back Connection

8½" Lower Connection

8½" Back Connection

Dial Size Inches	A	B	C	D	E	F	G	H	K	M	P	S	T	U	CC	LL	Weight (lbs)
4½	6 3/32 (148)				5⅜ (137)		3 15/16 (100)			4⅞ (124)					#10-24		2½
6	7 9/16 (192)	2⅞ (73)	4¾ (121)	1 1/16 (27)	7 (178)	1⅝ (41)	4½ (114)	1⅜ (35)	1 1/16 (27)	6½ (165)	2⅛ (54)	⅝ (16)	⅝ (16)	¾ (19)	¼-20	1/8–½ (3)(13)	3
8½	10 1/16 (257)				9⅝ (244)		6 (152)			9 (229)					¼-20		4½

Dimensions

Ashcroft Duragauge® Pressure Gauge

Case Type 1379

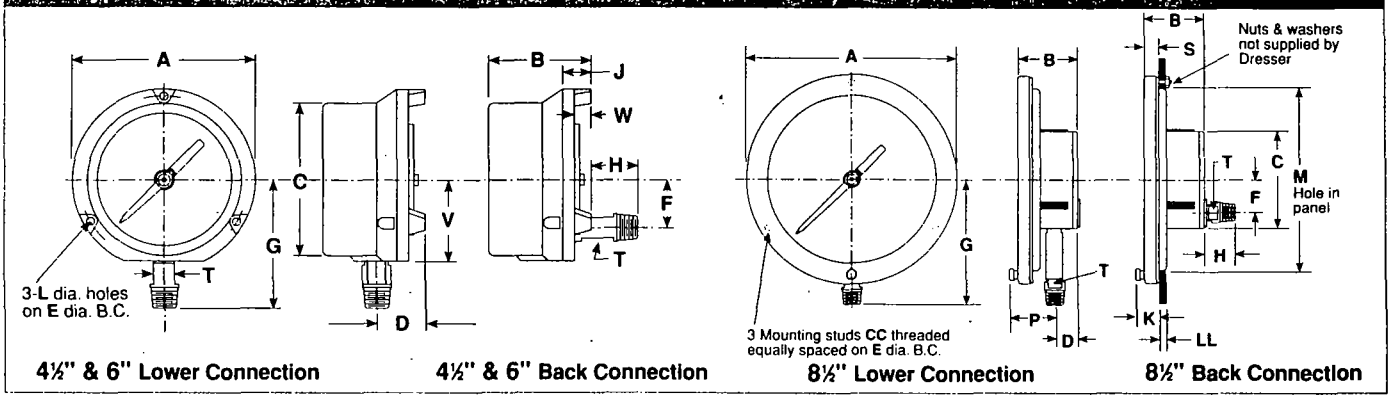

4½" & 6" Lower Connection | 4½" & 6" Back Connection | 8½" Lower Connection | 8½" Back Connection

Dial Size Inches	A	B	C	D	E	F	G	H	J	K	L	P	S	T	V	CC	LL	Weight (lbs)
4½	5 13/16 (148)	3 13/32 (86)	4 7/8 (124)	1 5/8 (41)	5 3/8 (137)	1 1/8 (42)	3 15/16 (100)	7/8	1 1/16	–	.218	2 1/8	–	5/8	2 5/8	–		2½
6	7 9/16 (192)	3½ (89)	6 5/8 (162)	1 5/8 (41)	7 (178)	1½ (42)	4½ (114)	(20)	(27)	–	(6)	(54)	–	(16)	(67)	–	1/8–½ (3)(13)	3 1/8
8½	10 1/16 (256)	2 7/8 (73)	4 3/4 (121)	1 1/16 (27)	9 5/8 (244)	1 5/8 (41)	6 (152)	1 3/8 (35)	–	1 1/16 (27)	–	–	1 1/16 (17)	–	–	#10-24		4½

Case Type 2462

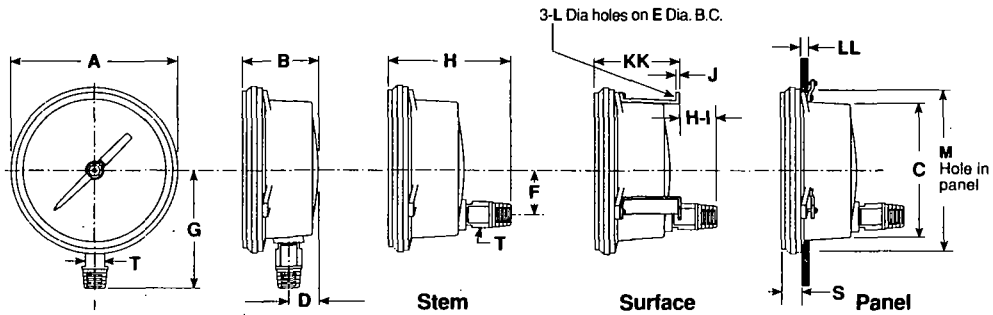

6" Lower Connection | 6" Back Connection

Dial Size Inches	A	B	C	D	E	F	G	H	H-1	J	KK	L	LL Min.	LL Max.	M	S	T	Weight (lbs)
6	6 3/8 (163)	2 7/16 (62)	4 3/4 (120)	7/8 (22)	5 3/8 (137)	1 5/8 (42)	3 15/16 (100)	4 9/16 (116)	4 9/32 (109)	5/64 (2)	2 11/16 (69)	.218 (6)	1/16 (2)	½ (13)	6 (152)	1 1/16 (17)	5/8 (19)	6

Note: Dimensions in brackets ( ) are millimeters.

Instrument Division Sales and Customer Service Locations

Domestic Headquarters

Stratford, Connecticut
250 E. Main Street
Stratford, CT 06497-5245
Tel: (203) 378-8281
FAX: (203) 385-0499

Domestic Sales Offices

Chicago, Illinois
400 W. Lake Street
Suite 318
Roselle, IL 60172-3392
Tel: (708) 980-9030
FAX: (708) 980-9440

Houston, Texas
3838 North Sam Houston
Parkway East
Suite 120
Houston, TX 77032
Tel: (713) 590-1092
FAX: (713) 590-7100

Los Angeles, California
3931 Mac Arthur Blvd.
Suite 202
Newport Beach, CA 92660
Tel: (714) 852-8948
FAX: (714) 852-8971

Philadelphia, Pennsylvania
Computer Road
P.O. Box 646
Suite A-8
Willow Grove, PA 19090
Tel: (215) 657-2886
FAX: (215) 657-7962

International Headquarters

Stratford, Connecticut
250 E. Main Street
Stratford, CT 06497-5245
Tel: (203) 378-8281
TLX: 475-00171TT
FAX: (203) 385-0357

International Operations

Brazil
Dresser Industria e
Comercio Ltda.
Divisao Manometros Willy
Caixa Postal 212
09510 Sao Caetano do Sul
Sao Paulo, Brazil
Tel: 55 -11-453-5477
FAX: 55-11-453-6778

Canada
Dresser Canada, Inc.
6688 Kitimat Road
Mississauga,
Ontario L5N 1P8
Canada
Tel: 905-826-8411
FAX: 905-826-9106

China
Dresser Trading
Room 5, 23rd Floor
CITIC Bldg.
19 Jianguo Menwai St.
Beijing, P.R.O.C.
Tel: 86-1-500-3139
FAX: 86-1-512-0030

France
Dresser Europe S.A.
Division Instrumentation
29, Rue de Monthléry
F-94563 Rungis Cedex
Silic 192, France
Tel: 33-1-46-87-22-42
FAX: 33-1-46-86-79-83

Germany
Dresser Europe S.A.
Instrument Division
Postfach 11 20
Max-Planck-Str. 1
D-52499 Baesweiler
Germany
Tel: 49-2401-8080
FAX: 49-2401-7027

Japan
Dresser Japan Ltd.
Room 318, Shin Tokyo Building
3-1 Marunouchi 3-Chome,
Chiyoda-ku, Tokyo, Japan
Tel: 813-3201-1501/1506
FAX: 813-3213-6567/6673

Korea
Dresser International S.A.
Korea Office
#2107 Kuk Dong Bldg.
60-1, 3-KA, Choongmu-Ro, Chung-
ku, Seoul, Korea 100-705
Tel: 82-2-274-079-2/3
FAX: 82-2-274-0794

Saudi Arabia
DARVICO
P.O. Box 10145
Jubail Industrial City
Saudi Arabia 31961
Tel: 966-3-341-0278
FAX: 966-3-341-7624

Singapore
Dresser Singapore
Instrument Operations
Block 1004 Toa Payoh North
#07-15/17
Singapore 1231
Tel: 65-252-6602
FAX: 65-252-6603

United Kingdom
Dresser U.K. Ltd.
Rufford Court
Hardwick Grange
Warrington, Cheshire
England WA1 4RF
Tel: 44-925-814545
FAX: 44-925-816378

Venezuela
Manufacturas Petroleras
Venezolanas S.A.
Apartado Postal 617
Maracaibo, Venezuela
Tel: 58-61-412-120
FAX: 58-61-413-954

INSTRUMENT DIVISION
STRATFORD OPERATIONS

100MWP 1P8/94
Specifications subject to change without notice.

Model Industrial RCDL

Nutating Disc Meter (Bronze and Thermoplastic)

Technical Brief

GENERAL

Badger's RCDL positive displacement meters are one of the most cost effective methods in metering industrial fluids. The RCDL meter's simple but efficient design assures high accuracy and repeatability over the entire meter flow range.

Available in sizes, 1/2" through 2" for flows up to 170 GPM, these meters are extremely rugged and reliable. Maintenance is seldom required, but if necessary, takes but a few minutes. All parts are designed and built of materials to meet your application, providing you with long life and a trouble-free, precision flow meter.

To complement the RCDL meter line, Badger offers a complete line of accessories that includes totalizers, electromechanical and electronic transmitters, rate of flow indicators and batch/process controllers.

OPERATION

The metering principle, known as positive displacement, is based on the continuous filling and discharging of the measuring chamber. Controlled clearances between the disc and the chamber insure minimum leakage for precise measurement of each volume cycle. As the disc nutates, the center spindle rotates a magnet, whose movement is sensed through the meter wall by a follower magnet or by electronic sensors. Each revolution of the magnet is equivalent to a fixed volume of fluid, which is converted to any engineering unit of measure for totalization, indication or process control.

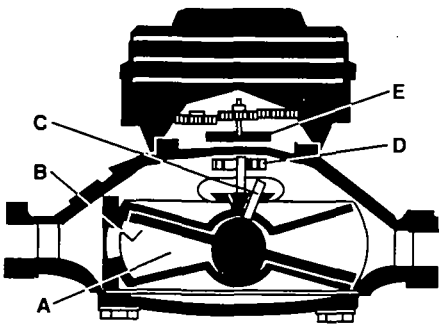

Liquid flowing through the meter chamber (A) causes a disc (B) to nutate or wobble. This motion, in turn, results in the rotation of a spindle (C) and drive magnet (D). Rotation is transmitted through the wall of the meter to a second magnet (E) which operates the transmitter.

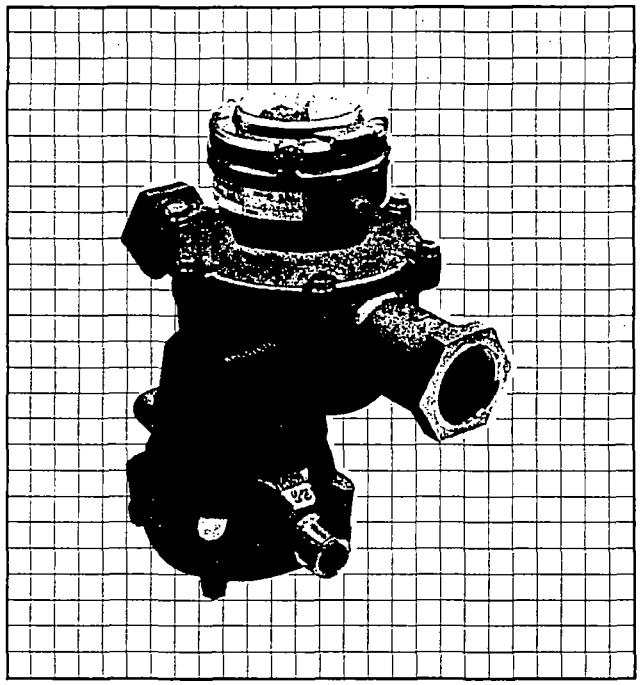

FEATURES

- **Accuracy: ±1.5% over full range**
- **Repeatability: ±0.5%**
- **Wide flow range**
- **Operating Temperature: 32° to 120° F**
  Model 25 Bronze: 250° F Option
- **Maximum Operating Pressure: 150 PSI**
- **Rugged bronze or thermoplastic housing**
- **Wide range of compatible accessories**
- **Easily maintained without removing from line**
- **Durable components for minimal maintenance**
- **Direct replacement for SC-ER**

BadgerMeter,Inc.
Industrial Division

Bulletin No. ITB-072-06
June 1996

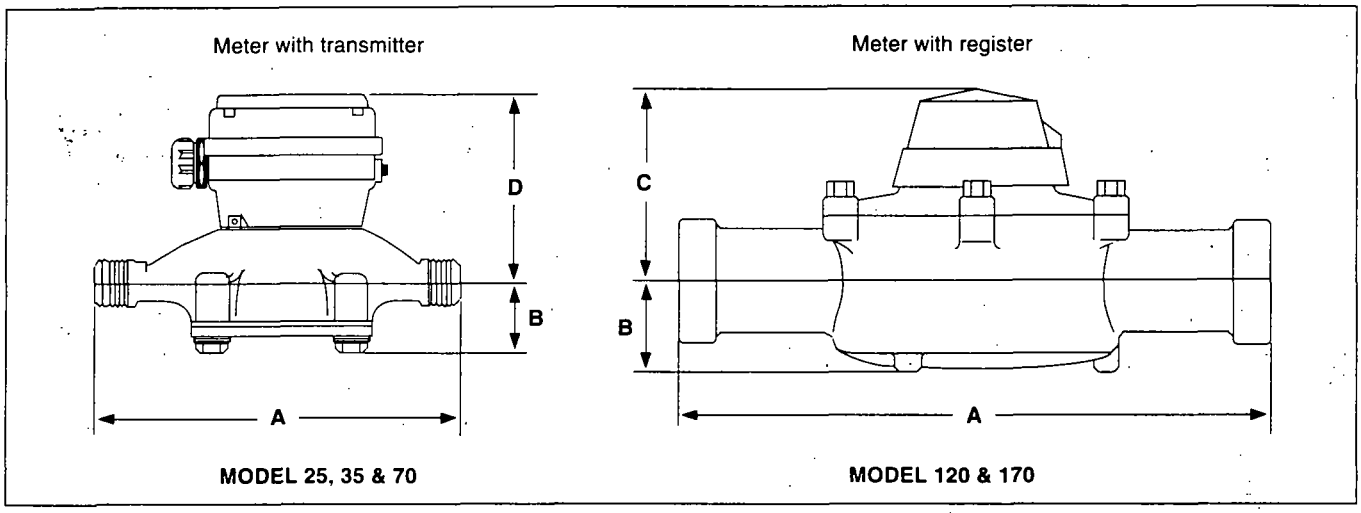

SPECIFICATIONS

Meter Model	Meter Size Inches	Flow Range GPM	Housing Material	Straight Pipe-Threaded Ends	DIMENSIONS (INCHES)				Approximate Weight Pounds
					Laying Length A	Center Line to Base B	Register Height C	Transmitter Height D	
M 25	5/8	1/2 - 25	BZ or PL	Male	7.5	1.7	3.3	4.4	5
M 25	3/4	1/2 - 30	BZ or PL	Male	7.5	1.7	3.3	4.4	5
M 35	3/4	3/4 - 35	BZ	Male	9.0	1.7	3.6	5.0	6
M 40	1	3/4 - 50	PL	Male	10.75	1.9	3.8	5.5	5
M 70	1	1 - 70	BZ	Male	10.75	2.3	4.2	5.6	12
M 120	1 1/2	2 - 120	BZ	Female	12.62	2.4	4.6	6.0	20
M 170	2	2 - 170	BZ	Female	15.25	2.9	5.1	6.5	30

BZ = Bronze; PL = Plastic

Optional connection set assemblies available, all having NPT threads.

Model 25 is available with optional corrosion resistant internals with both housing materials; temperature limit with this option is increased on the bronze housing model to 250° F.

PRESSURE LOSS CHART

Industrial Disc Meters

Rate of Flow in Gallons Per Minute

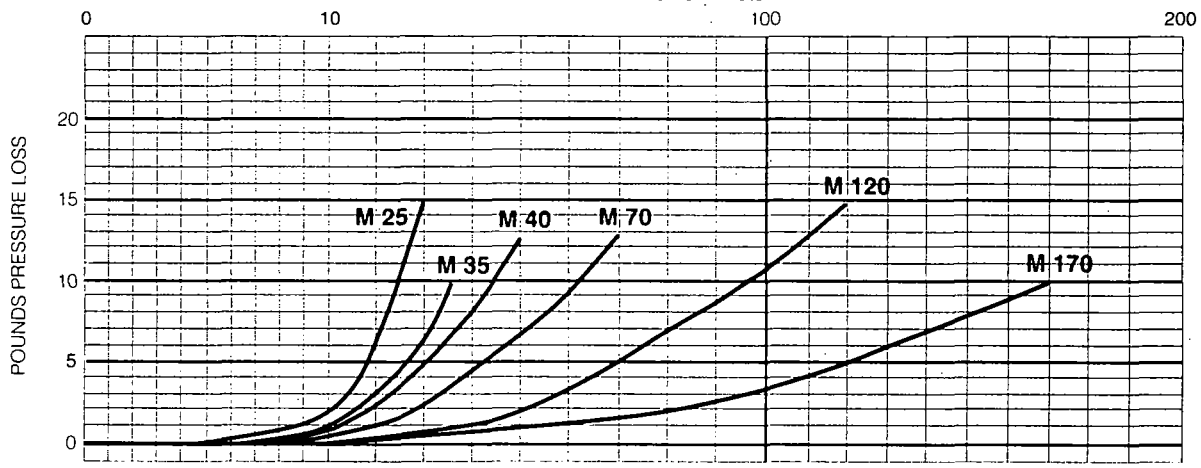

BadgerMeter,Inc. Industrial Division
4545 W. Brown Deer Road, P. O. Box 23099 Milwaukee, WI 53223-0099
Telephone: (414) 355-0400
Fax: (414) 355-7499

All rights reserved.
All data subject to change without notice.

Model Industrial RCDL

Nutating Disc Meters

Installation & Operation Manual

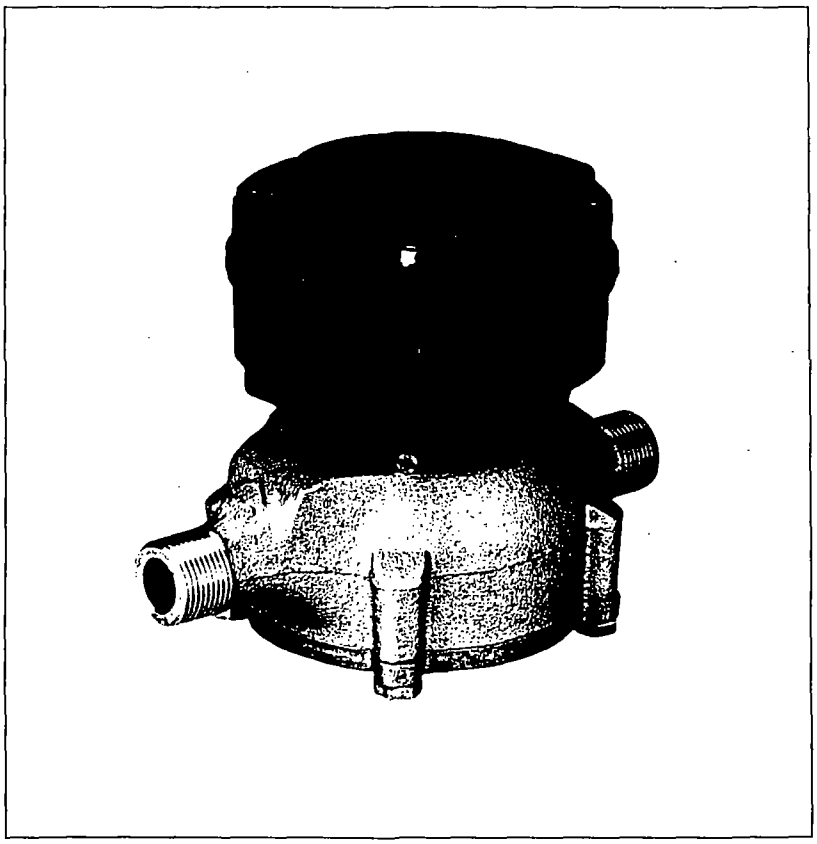

BadgerMeter,Inc.
Industrial Division

Bulletin No. IOM-067-02
Part No. 53400-067
August 1996

GENERAL DESCRIPTION

Badger's RCDL positive displacement meters are one of the most cost effective methods in metering industrial fluids. The RCDL meter's simple but efficient design assures high accuracy and repeatability over the entire meter flow range.

Available in five sizes, 1/2" through 2" for flows up to 170 GPM, these meters are extremely rugged and reliable. Maintenance is seldom required, but if necessary, takes only a few minutes. All parts are designed and built of materials to meet your application, providing you with long life and a trouble-free, precision flow meter.

To complement the RCDL meter line, Badger offers a complete line of accessories that includes totalizers, electromechanical and electronic transmitters, rate of flow indicators and batch/process controllers.

The metering principle, known as positive displacement, is based on the continuous filling and discharging of the measuring chamber. Controlled clearances between the disc and the chamber insure precise measurement of each volume cycle. As the disc nutates, the center spindle rotates a magnet, whose movement is sensed through the meter wall by a follower magnet or by various sensors. Each revolution of the magnet is equivalent to a fixed volume of fluid, which is converted to any engineering unit of measure for totalization, indication or process control.

Figure 1.

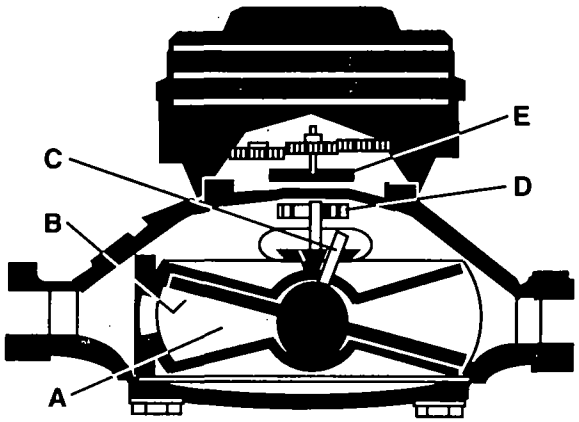

Liquid flowing through the meter chamber (A) causes a disc (B) to nutate or wobble. This motion, in turn, results in the rotation of a spindle (C) and drive magnet (D). Rotation is transmitted through the wall of the meter to a second magnet (E) or varied style of sensor pickup.

METER OPTIONS/SPECIFICATIONS

Meter with Transmitter

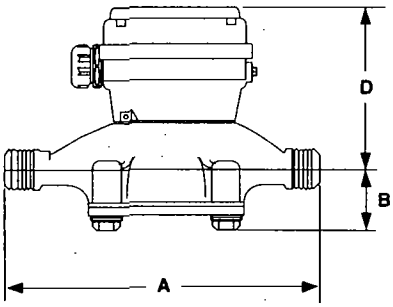

MODEL 25, 35 & 70

Meter with Register

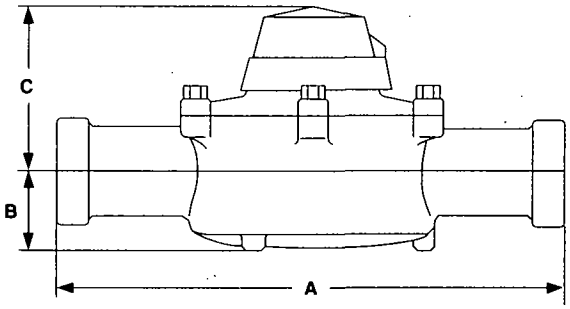

MODEL 120 & 170

Meter Model	Meter Size Inches	Flow Range GPM	Housing Material	End Connections	DIMENSIONS (INCHES) Laying Length A	Center Line to Base B	Register Height C	Transmitter Height D	Approximate Weight Pounds
M 25	5/8	1/2 - 25	BZ or PL	NPT - Male	7.5	1.7	3.3	4.4	5
M 25	3/4	1/2 - 30	BZ or PL	NPT - Male	7.5	1.7	3.3	4.4	5
M 35	3/4	3/4 - 35	BZ	NPT - Male	9.0	1.7	3.6	5.0	6
M 40	1	3/4 - 50	PL	NPT - Male	10.75	1.9	3.8	5.5	5
M 70	1	1 - 70	BZ	NPT - Male	10.75	2.3	4.2	5.6	12
M 120	1 1/2	2 - 120	BZ	NPT - Female	12.62	2.4	4.6	6.0	20
M 170	2	2 - 170	BZ	NPT - Female	15.25	2.9	5.1	6.5	30

BZ = Bronze; PL = Plastic

Model 25 is available with optional corrosion resistant internals with both housing materials; temperature limit with this option is increased on the bronze housing model to 250° F.

Table 1 - Configuration and Specification Data for Model RCDL Disc Meters

UNPACKING AND INSPECTION

Upon receipt of meter, perform the following:

NOTE: If damage to the shipping container is evident, request the carrier to be present when meter is unpacked.

A. Carefully open the shipping container. Remove all the cushioning material surrounding the meter and carefully lift the meter from the container.

Retain all of the packing material for possible use in reshipment or storage of the meter.

B. Visually inspect the meter and the accessory device for any physical damage such as scratches, loose or broken parts, or any other damage that may have occurred during shipment of the product.

NOTE: If damage is found upon receipt of the equipment, request inspection by the carrier's agent within 48 hours of the delivery. Then file a claim with the carrier. A claim for the equipment damaged in transit is the responsibility of the customer.

INSTALLATION

Any special instructions required for the installation and/or electrical connection of any meter-mounted or free-standing accessory devices such as registers, pulse transmitters, and remote batch controllers, will be provided as a supplement to this manual.

A. Please read the following instructions to become familiar with the requirements and the recommended procedures involved.

CAUTION: The meter must be operated in an application within the specified temperature range to obtain optimum accuracy and prevent damage to any internal components.

1. Verify the fluid operating temperature range is compatible with the materials of construction of the meter received.

CAUTION: The life of the meter will be impaired if it is operated at flow rates in excess of those indicated in the product specifications.

2. If any solid material is present in the liquid, installation of a strainer is recommended upstream of the meter.

3. Locate the meter installation with consideration for sufficient space for cleaning and maintenance of the meter.

B. Review the overall dimensions (including laying length requirements) of the meter as listed in Table 1 of this manual on page 2. If necessary, consideration may also need to be given for height dimensions including the meter mounted accessory. Then proceed as follows:

1. Measure the overall length of the meter with the connection pieces attached to the inlet and outlet spuds of the meter.

2. Be sure to provide this proper gap length in the facility piping.

CAUTION: Excess gap length may cause excessive strain on connection assemblies.

3. Remove the connections and install one connection piece in each end of the facility pipe gap provided in step #2. Allow for the gaskets at the inlet and the outlet spuds of the meter.

4. Install the meter making sure that the flow arrow marking on the meter housing is in the correct relationship to the direction of the fluid flow in the system.

5. Tighten the meter connections.

Note instructions on packaging from connection assembly when tightening.

6. To relieve any possible strain on the facility piping that might be caused by the weight of any of the large size meters, it is recommended that consideration be given to incorporating a meter support to be placed under the housing of the meter.

To ensure that the meter has been properly installed and operational:

A. Slowly open the upstream valve to apply fluid pressure to the meter. Check the connections for any possible leakage. Retighten the connections as required.

B. Perform a functional test of the meter utilizing the adjustment and calibration procedures that are included later in this manual.

GENERAL OPERATING INSTRUCTIONS

In general, the operation of a Model RCDL disc meter is either manually controlled or accessory controlled. Manual operation applies to the applications employing hand-operated valves or other manually activated, flow-regulating devices that are not functionally controlled by a meter accessory. Accessory controlled operation applies to applications when a meter accessory provides a signal output to activate and/or deactivate a valve or other flow control device.

CAUTION: Valves controlling the fluid flow through the meter should be opened and closed slowly to prevent shock loads that may damage the meter measuring element.

A. MANUAL OPERATION. The following procedures are for use in simple metering applications where the flow of fluid is controlled by hand-operated valves located upstream and downstream of the meter.

1. Slowly open the upstream valve to apply fluid to the meter.

2. Slowly open the downstream valve to initiate the metering operation.

3. Adjust downstream valve so the flow rate of the fluid does not exceed the maximum continuous flow rate specification of the meter. (Refer to Table 1 of this manual.)

NOTE: On meters with an accessory device providing a totalizing indicator, the flow rate of the fluid can be checked by timing the number of gallons registered in one minute.

4. To stop metering, slowly close downstream valve; then close upstream valve.

B. ACCESSORY CONTROLLED OPERATION. Operating procedures for accessory controlled applications are dependent on the specific function of that accessory employed and its electrical interconnection with a flow control device or devices. Refer to the bulletin or bulletins covering the applicable accessories for specific operating instructions (included as a supplement to this manual when required.)

SHUTDOWN INSTRUCTIONS

If the meter is to be shut down for an extended period of time, it is recommended that the measuring chamber of the meter be thoroughly flushed out to prevent the settling out of undissolved solids or the accumulation of corrosive deposits.

MAINTENANCE

PREVENTIVE MAINTENANCE

Preventive maintenance consists of periodic inspection and cleaning procedures. The procedures should be performed at regular intervals and any defects discovered should be corrected before further operation of the meter.

PERIODIC INSPECTION

A. Visually inspect meter and accessory for missing hardware, loose connections, broken register glass, damaged wiring, or other signs of wear or deterioration. Repair or replace components as required.

B. Verify proper flow rate and pressure for meter. A loss in pressure, with the resulting flow rate decrease, may indicate the meter screen is clogged and requires cleaning.

CLEANING

Clean all dust, dirt, grease, moisture, or other foreign material from exterior of meter and applicable accessory.

CALIBRATION CHECK AND ADJUSTMENT

The following instructions are provided to assist in performing on-site calibration check and/or adjustment.

ACCURACY TEST

A. Place a test tank of known volume at output of meter.

B. Fill test tank to calibrated level. Make test run at same flow rate to be used in actual operation.

C. Record quantity indicated on applicable accessory.

D. Repeat test three times and average recorded results.

E. Perform the following calculations to determine percent of accuracy of meter-accessory combination.

$$\frac{\text{Qty. Indicated on Accessory}}{\text{Actual Quantity in Test Tank}} \times 100 = \text{Meter Accuracy}$$

Example 1.

$$\frac{95 \text{ Gallons}}{100 \text{ Gallons}} \times 100 = 95\% \text{ Accuracy}$$

The meter-mounted accessory is slow and reading low so it must be speeded up by a calibration adjustment.

Example 2.

$$\frac{104 \text{ Gallons}}{100 \text{ Gallons}} \times 100 = 104\% \text{ Accuracy}$$

In this example, the meter accessory is fast and running high so it must be slowed down by calibration adjustment.

CHANGE GEAR CALIBRATION

If the accuracy test of a meter-accessory combination indicates that adjustment is required and change gears are the medium; proceed as follows:

A. Remove applicable Driver (Accessory) change gear and Driven (Meter) change gear.

NOTE: The number of teeth and outside diameter is stamped on each gear.

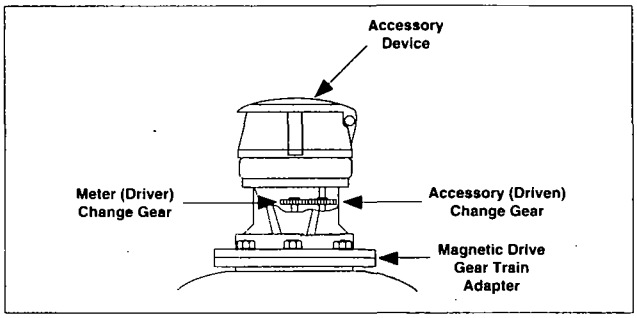

Figure 3 - Change Gear Locations on Model RCDL Meters

B. Calculate ratio of existing change gears as follows:

$$\text{Ratio} = \frac{\text{No. of Teeth on Accessory Change Gear}}{\text{No. of Teeth on Meter Change Gear}}$$

C. Calculate new change gear ratio required by multiplying the ratio of existing change gears by the percent-of-meter accuracy determined in the accuracy test.

Example

$$\text{Existing Change Gear Ratio} = \frac{42 \text{ Teeth}}{43 \text{ Teeth}} = .976$$

Meter Accuracy = 95%

$$\text{Corrected Change Gear Ratio} = .976 \times \frac{95}{100} = .927$$

D. If change gear charts are available, select a new change gear combination that matches corrected change gear ratio. If new gears are not available, submit order for corrective change gears to nearest Badger Meter Representative or contact the Industrial Division of Badger Meter, Inc.

NOTE: When ordering, specify serial number of meter, meter model and size, accessory device employed, number of teeth and diameter of existing change gears, and corrected change gear ratio required.

E. Observe the position of old change gears on spindles before removing. Install new change gears on meter and accessory spindles and assemble accessory to meter. Care should be taken to obtain full mesh when assembling accessory to meter gear train adapter. Note position information from old gears.

ELECTRONIC CALIBRATION

If electronic scaling is the accessory medium for calibration, see accessory technical brief for instructions.

SERVICING

The following instructions are for removal, inspection and installation of meter parts/assemblies. Refer to applicable illustrated parts list for part numbers of components and ordering information. Accessory service and repair procedures are provided in literature specific to that device.

METER ASSEMBLY

These procedures are for disassembly of the meter:

A. Shut off fluid flow to meter. Place container under meter and relieve fluid pressure in the meter by uniformly loosening bolts (bronze meter) or retaining ring (plastic meter). Fluid will run out into container.

B. Remove bolts or retaining ring while holding housing bottom in place. Remove housing bottom. Chamber assembly may drop from housing as bottom is removed.

C. If chamber assembly is out, set aside. If not, first remove chamber strap and then chamber assembly.

D. Remove meter screen. Inspect screen for dirt and corrosion. Clean or replace as necessary.

E. Inspect the chamber assembly:

1. Check the disc in the chamber assembly for warpage, cracks or wear. A severely worn disc can cause over delivery of the fluid being metered.

2. Check the thrust roller and thrust roller insert for excessive wear.

After inspection, clean or replace the chamber assembly as necessary. If chamber is worn or corroded, it is always recommended that the entire chamber and disc assembly be replaced.

F. Re-install housing chamber assembly, screen, chamber strap and bottom as follows:

1. Assemble screen in proper location.

2. Locate chamber assembly in proper orientation. Add chamber strap.

3. Position housing bottom with the correct seal. (Replacement of seal is always recommended.)

4. Assemble bolts or retaining ring and tighten.

ALTERNATIVE DISASSEMBLY METHOD FOR SERVICE

Loosen connection pieces slightly. Turn meter upside down, putting gravity on your side. This will help eliminate the possibility of the chamber assembly and/or screen component dropping during disassembly and causing damage.

RECALIBRATION

After repair or replacement of a meter component or assembly, perform the calibration check and adjustment procedure to ensure that the meter is properly calibrated and will operate in accordance with published specifications.

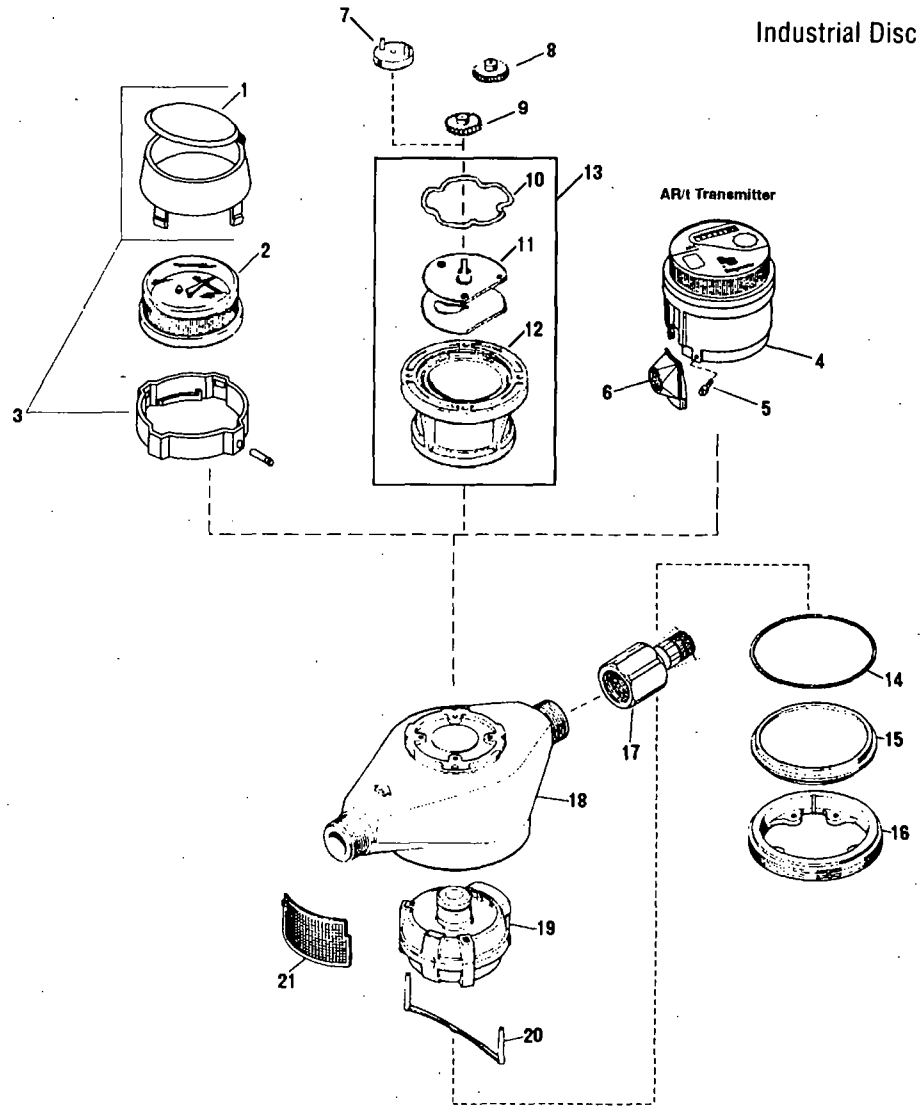

Item No.	Part Description
1	Shroud Assembly, Plastic (Cover, top and roll pin, no btm.)
2	Register Assembly, U.S. Gallons
	Register Assembly, Liters/M3
3	Shroud Assembly, Plastic (Cover, top, btm., roll pin)
4	Pulse Transmitter AR/t
5	Mounting Screw
6	Conduit Adapter
7	Coupling (Series 76 Register)
8	Change Gear, Driver
9	Change Gear, Driven
10	Retaining Ring
11	Gear Train (234:1)
11	Gear Train (30:1)
12	Housing, Mach.
13	Gear Train Assy. (234:1)
13	Gear Train Assy. (30:1)

Item No.	Part Description
14	Housing Bottom "O" Ring Seal
15	Housing Bottom
16	Retaining Ring
17	Connection Assembly, 1/2" Plastic
	Connection Assembly, 3/4" Plastic
	Connection Assembly, 1" Plastic
	Connection Assembly, 1/2" Bronze
	Connection Assembly, 3/4" Bronze
	Connection Assembly, 1" Bronze
18	Housing 5/8" x 1/2", 7 1/2" LL
	Housing 5/8" x 3/4", 7 1/2" LL
	Housing 1" x 1", 10 3/4" LL
19	Chamber and Disc Assembly, Plastic
	Chamber and Disc Assembly, LCP
20	Chamber Retainer Strap
21	Screen

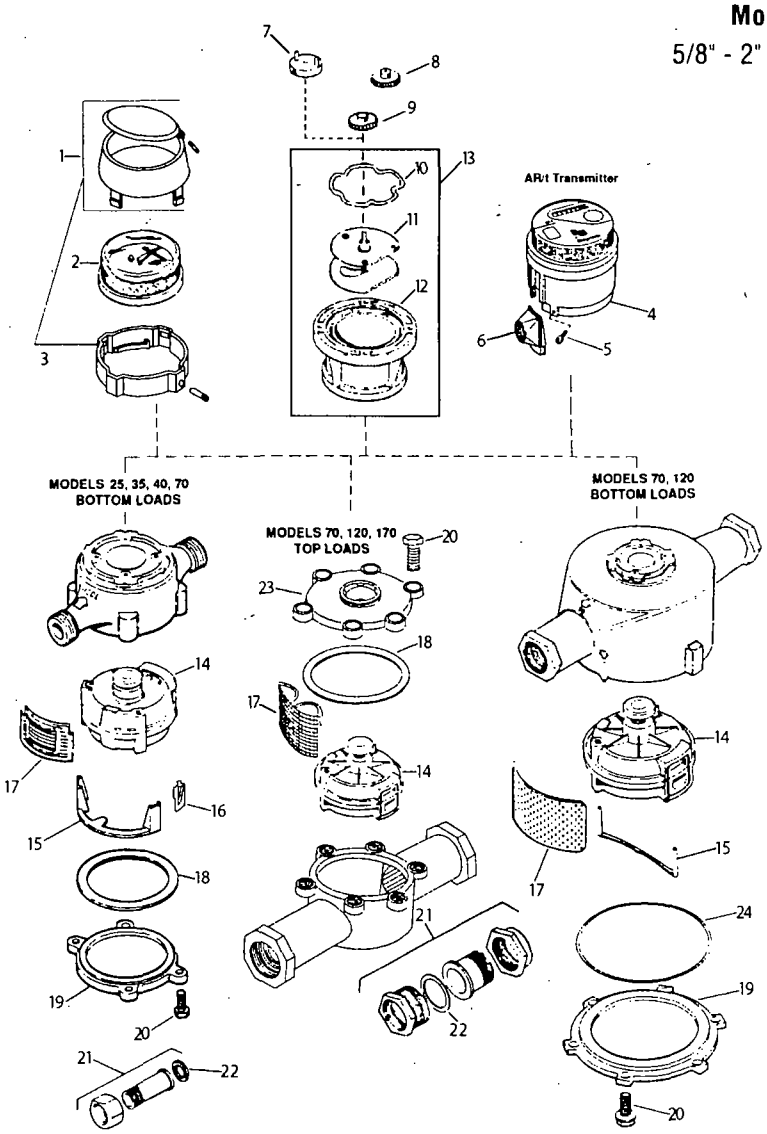

Item No.	Part Description
1	Shroud Assembly, Plastic (Cover, top & roll pin) (No btm.)
2	Register Assembly, Gallons Register Assembly, Liters/M3
3	Shroud Assembly, Plastic (Cover, top, btm. & roll pin)
4	Pulse Transmitter AR/t
5	Mounting Screw
6	Conduit Adapter
7	Coupling (Series 76 Reg.)
8	Change Gear, Driver
9	Change Gear Driven
10	Retaining Ring
11	Gear Train (234:1)
11	Gear Train (30:1)
12	Housing, Mach.
13	Gear Train Assy. (234:1)
13	Gear Train Assy. (30:1)
14	Chamber & Disc Assy., Std. Chamber & Disc Assy., LCP

Item No.	Part Description
15	Chamber Retainer Strap
16	Spring Clip (High Temp. Only)
17	Screen
18	Housing Gasket , Buna N Housing Gasket, Viton
19	Housing Bottom
19A	Washers (6 needed)
20	Housing Bolt
21	Conn. Assembly (2) 1/2" Conn. Assembly (2) 3/4" Conn. Assembly (2) 1" Conn. Assembly (2) 1 1/2" Conn. Assembly (2) 2"
22	Conn. Washer (1) 1/2" Conn. Washer (1) 3/4" Conn. Washer (1)
23	Housing Top
24	Bottom Seal "O" Ring

BadgerMeter,Inc. Industrial Division

4545 W. Brown Deer Road, P. O. Box 23099 Milwaukee, WI 53223-0099
Telephone: (414) 355-0400
Fax: (414) 355-7499

All rights reserved.
All data subject to change without notice.

Models 25, 35, 40, 70, 120 and 170

5/8" - 2" Industrial Disc Meters – Bronze

Repair Parts

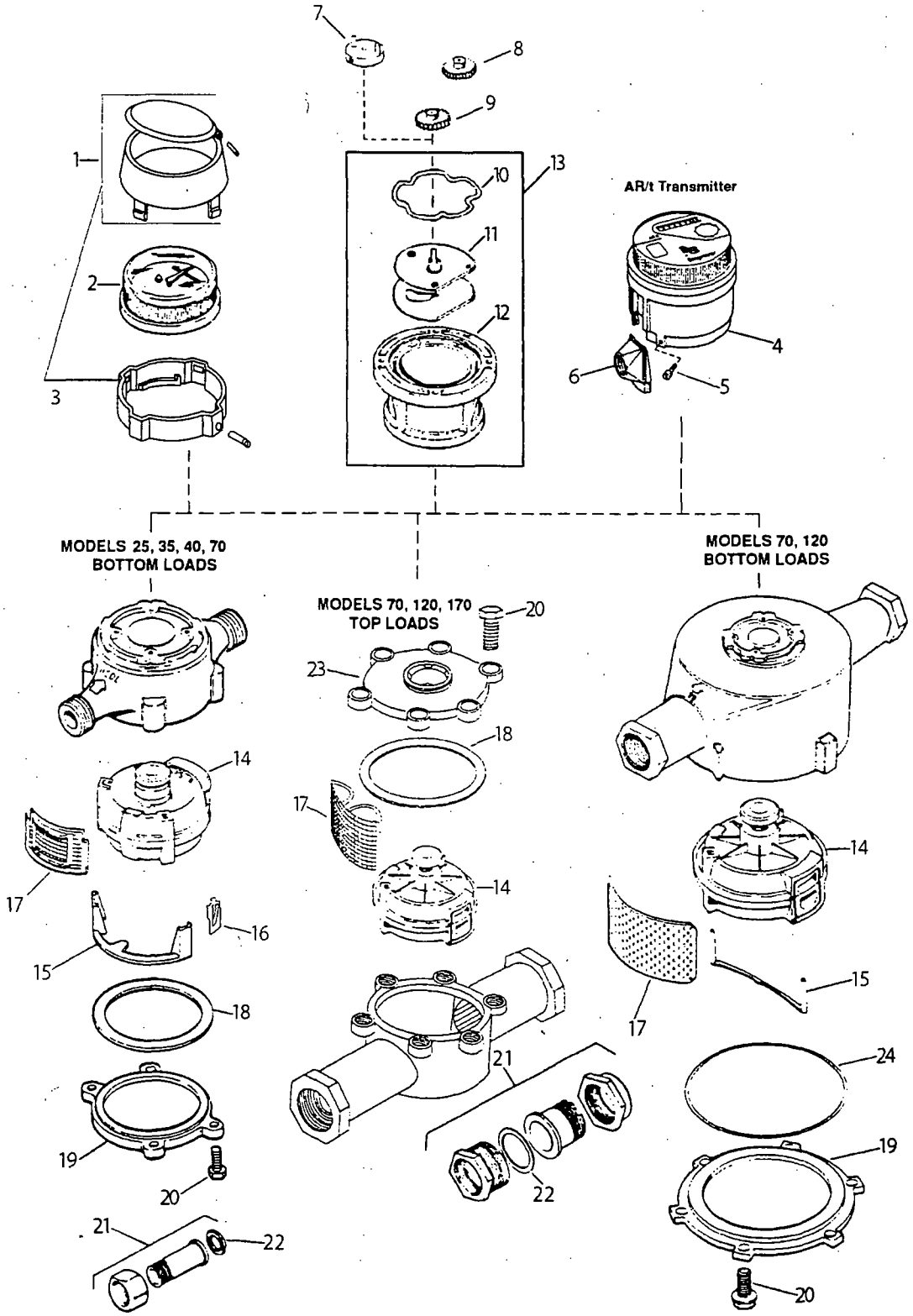

BadgerMeter,Inc.
Industrial Division

Bulletin No. IRP-104-03
Part No. 53401-104
June 1996

ORDER INFORMATION: This repair parts bulletin shows an exploded view of the product with specific reference to those items available for replacement. The item number and part number may change at any time; therefore, it is important when placing an order that a complete description of the part, meter size, model and serial number be provided.

Item	Description	Model 25 1/2" & 3/4"	Model 35 3/4"	Model 40 1"	Model 70 1"	Model 70 Bottom Load 1 1/2"	Model 70 Top Load 1 1/2"	Model 120 Top Load 1 1/2" & 2"	Model 120 Bottom Load 2"	Model 170 Top Load 2"
1	Shroud Assembly, Plastic (Cover, top & roll pin) (No btm.)	62416-001	62416-001	62416-001	62416-001	62416-001	62416-001	62416-001	62416-001	62416-001
2	Register Assembly, Gallons	58932-002	58932-011	58932-003	58932-007	58932-007	58932-007	58932-008	58932-008	58932-013
	Register Assembly, Liters/M3	58932-005	58932-012	58932-006	58932-009	58932-009	58932-009	58932-010	58932-010	58932-014
3	Shroud Assembly, Plastic (Cover, top, btm. & roll pin)	62696-001	62696-001	62696-001	62696-001	62696-001	62696-001	62696-001	62696-001	62696-001
4	Pulse Transmitter AR/t	Please advise meter size, model and unit of measure.								
5	Mounting Screw	32140-000	32140-000	32140-000	32140-000	32140-000	32140-000	32140-000	32140-000	32140-000
6	Conduit Adapter	58682-001	58682-001	58682-001	58682-001	58682-001	58682-001	58682-001	58682-001	58682-001
7	Coupling (Series 76 Reg.)	56646-001	56646-001	56646-001	56646-001	56646-001	56646-001	56646-001	56646-001	56646-001
8	Change Gear, Driver	----------	----------	----------	----------	----------	----------	----------	----------	----------
9	Change Gear Driven	----------	----------	----------	----------	----------	----------	----------	----------	----------
10	Retaining Ring	1013-000	1013-000	1013-000	1013-000	1013-000	1013-000	1013-000	1013-000	1013-000
11	Gear Train (234:1)	56065-004	56065-004	56065-004	56065-004	56065-004	56065-004	56065-004	56065-004	56065-004
11	Gear Train (30:1)	56065-005	56065-005	56065-005	56065-005	56065-005	56065-005	56065-005	56065-005	56065-005
12	Housing, Mach.	58091-002	58091-002	58091-002	58091-002	58091-002	58091-002	58091-002	58091-002	58091-002
13	Gear Train Assy. (234:1)	56066-004	56066-004	56066-004	56066-004	56066-004	56066-004	56066-004	56066-004	56066-004
13	Gear Train Assy. (30:1)	56066-005	56066-005	56066-005	56066-005	56066-005	56066-005	56066-005	56066-005	56066-005
14	Chamber & Disc Assy., Std.	33334-009	33334-029	33334-010	33334-016	33334-016	33334-016	33334-017	33334-017	33334-028
	Chamber & Disc Assy., LCP (Coated Magnet)	58908-006	----------	----------	----------	----------	----------	----------	----------	----------
15	Chamber Retainer Strap	58540-001	58540-001	56270-001	56188-001	56188-001	----------	----------	56188-001	56188-001
16	Spring Clip (High Temp. Only)	62695-001	----------	----------	----------	----------	----------	----------	----------	----------
17	Screen	34333-001	59805-001	34371-001	56182-001	56182-001	59186-001	59207-001	56199-001	59720-001
18	Housing Gasket . Buna N	11071-033	59782-001	58208-001	58769-001	----------	59188-001	59239-001	----------	59722-001
	Housing Gasket, Viton	11071-045	----------	----------	----------	----------	----------	----------	----------	----------
19	Housing Bottom	62635-001	59784-001	58128-001	59703-001	56177-001	----------	----------	56194-001	----------
19A	Washers (6 needed)	----------	----------	----------	24991-044	----------	----------	----------	----------	----------
20	Housing Bolt	59058-001	59058-001	59058-001	55030-168	25585-001	59733-001	59732-001	25585-001	59732-001
21	Conn. Assembly (2) 1/2"	7557-002	----------	----------	----------	----------	----------	----------	----------	----------
	Conn. Assembly (2) 3/4"	7559-002	7559-002	----------	----------	----------	----------	----------	----------	----------
	Conn. Assembly (2) 1"	----------	----------	7561-002	7561-002	----------	----------	----------	----------	----------
	Conn. Assembly (2) 1 1/2"	----------	----------	----------	----------	7563-000	7563-000	7563-000	----------	----------
	Conn. Assembly (2) 2"	----------	----------	----------	----------	----------	----------	7564-000	7564-000	7564-000
22	Conn. Washer (1) 1/2"	11012-001	----------	----------	----------	----------	----------	----------	----------	----------
	Conn. Washer (1) 3/4"	14143-000	14143-000	----------	----------	----------	----------	----------	----------	----------
	Conn. Washer (1)	----------	----------	18177-000	18177-000	1331-000	1331-000	1331-000/ 1359-000	1359-000	1359-000
23	Housing Top	----------	----------	----------	----------	----------	59189-001	59238-001	----------	59719-001
24	Bottom Seal "O" Ring	----------	----------	----------	----------	55300-255	----------	----------	55300-261	----------

BadgerMeter,Inc. Industrial Division
4545 W. Brown Deer Road, P. O. Box 23099 Milwaukee, WI 53223-0099
Telephone: (414) 355-0400
Fax: (414) 355-7499

All rights reserved.
All data subject to change without notice.

SECTION 5

Magnetrol®

Displacer Type Liquid Level Switches

Magnetrol's displacement type level switches offer the industrial user a wide choice of alarm and control configurations. Each unit utilizes a simple buoyancy principle and are well suited for simple or complex applications, such as foaming or surging liquids or agitated fluids, and usually cost less than other types of level switches.

Features

- Narrow or wide level ranges achieved through multiple switch mechanism capability.
- Displacers adjustable at any point along the suspension cable.
- 10 feet (3m) suspension cable standard.
- Anti-surge design eliminates the possibility of switch shortcycling.
- Flanged or threaded mounting available.
- Easy installation.
- Field adjustable set point and switch differential.
- NACE models.
- Floating roof top models.
- Proof-er ground check.
- Choice of displacers:
  Porcelain
  316 Stainless steel
  Karbate
  Lead
- Choice of switch mechanisms:
  Mercury
  Dry contact
  Pneumatic
  Hermetically sealed
- Available switch housings:
  NEMA 1, carbon steel for pneumatics
  NEMA 4X, polymer coated aluminum
  NEMA 4X/7/9, Class I, Div. 1, Group C & D, polymer coated aluminum
  NEMA 4X/7/9, Class I, Div. 1, Group B, polymer coated aluminum

Pressure/Temperature ratings

Threaded Models①	800 PSIG @ +100° F (55 Bar @ +38° C) 250 PSIG @ +400° F (17 Bar @ +204° C)
Flanged Models	Limited to the pressure rating of the selected flange or displacer. Cast iron flanges are flat face type conforming to ANSI dimensional specifications.
Low Pressure Proof-er Models	25 PSIG @ +200° F (1.7 Bar @ +93° C)
Medium Pressure Proof-er Models	125 PSIG @ +300° F (8.6 Bar @ +149° C)

① Models with stainless steel displacers are rated 720 PSIG @ +100° F (50 Bar @ 38° C).

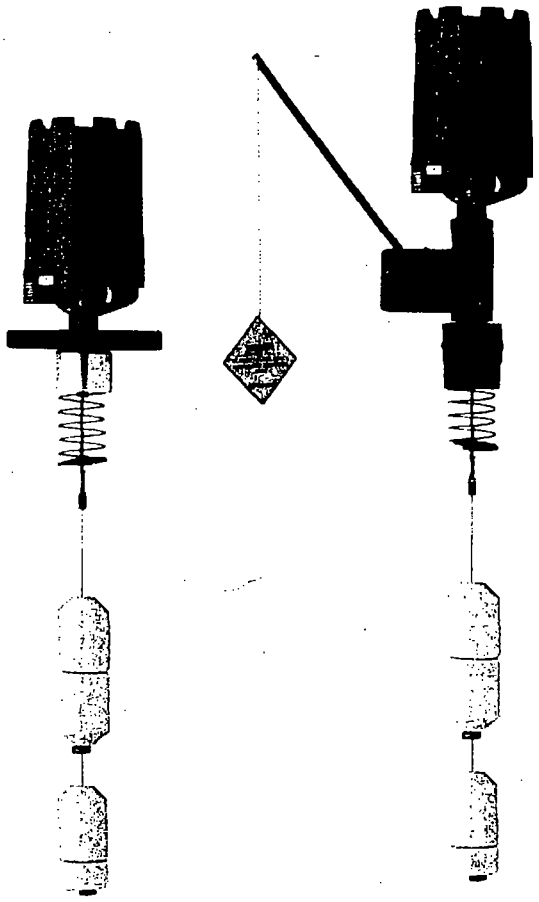

Displacer Level Switch

Displacer Level Switch with Proof-er

Applications

- Foaming or surging liquids
- Agitated fluids
- Sewage handling
- Dirty liquids
- Paints
- Varnishes
- Heavy oils
- Liquids with solids

Principle of operation - Standard controls

Operation is based upon simple buoyancy whereby a spring is loaded with weighted displacers which are heavier than the liquid. Immersion of the displacers in the liquid results in buoyancy force change, which moves the spring upward. Since the spring moves only when the level moves on a displacer, spring movement **A** is always a small fraction of the level travel between displacers **B**. A magnetic sleeve **C** is connected to the spring and operates within a non-magnetic barrier tube **D**. Spring movement causes the magnetic sleeve to attract a pivoted magnet **E**, actuating a switch mechanism **F** located outside the barrier tube. Built-in limit stops prevent over stroking of the spring, under level surge conditions.

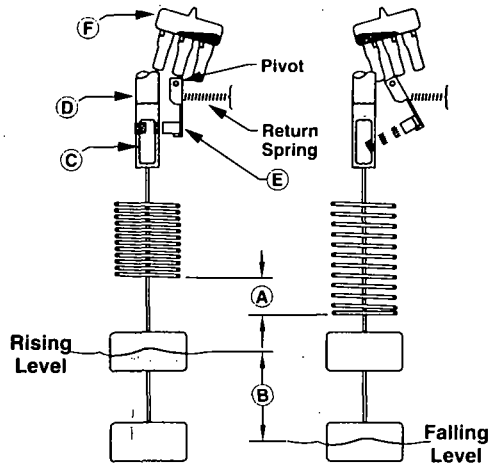

Principle of operation - Proof-er controls

The purpose of the Proof-er is to check the operation of a displacer control without having to raise the level in the tank. This is accomplished by pulling downward on the Proof-er chain. This causes the spring loaded lever arm to lift the switch actuator, simulating a high or high high level condition. When the chain is released, the Proof-er returns the actuator to its previous position to resume normal operation.

Floating roof top controls

The floating roof top control is designed for installation on "barrier" (floating roof) tanks. The control may be furnished with a lead displacer to prevent sparking. A stainless steel displacer is required if the control is to actuate in liquid as well as by the barrier.

Agency approvals

Agency	Approval	Models
FM	Non-Hazardous NEMA 4X	All models with an electric switch mechanism and a housing listed as NEMA 4X.
	Class I, Div. 1 ② Groups C & D Class II, Div. 1, Groups E, F & G	All models with an electric switch mechanism and a housing listed as NEMA 4X/7/9.
	Class I, Div. 1 ① Groups B, C & D Class II, Div. 1, Groups E, F & G	All models with an electric switch mechanism and a housing listed as NEMA 4X/7/9 Class I, Div. 1, Group B.
CSA	Non-Hazardous CSA TYPE 4X	All models with a Series B, C, D, O or Q electric switch mechanism and a housing listed as CSA TYPE 4X.
	Class I, Div. 2, Groups B, C & D	All models with a Series A, E, HS, N or T electric switch mechanism and a housing listed as CSA TYPE 4X.
	Class I, Div. 1 ② Groups C & D Class II, Div. 1, Groups E, F & G	All models with an electric switch mechanism and a housing listed as NEMA 4X/7/9.
	Class I, Div. 1 Groups B, C & D Class II, Div. 1, Groups E, F & G	All models with an electric switch mechanism and a housing listed as NEMA 4X/7/9 Class I, Div. 1, Group B.
Cenelec	EEx d IIC T6	All models with an electric switch mechanism and a Cenelec housing. ①
Baseefa	Ex d IIC T6	All models with an electric switch mechanism and a Baseefa housing. ①
SAA	Ex d IIC T6 IP65	All models with a Series A, B, C, D, E or HS electric switch mechanism and a housing listed as NEMA 4X/7/9 Class I, Div., 1, Group B.

① Consult the factory for the proper switch mechanism code.
② With drain CSA drops Group E and FM drops Group C.
Note: Heaters do not have agency approvals in any classifications.

Displacers

Stainless steel displacers are rated 720 PSIG @ +100° F (50 Bar @ +38° C).

Karbate displacers are limited to a maximum temperature of +300° F (+149° C).

Do not use porcelain displacers on non-vented boiler water condensate systems over +200° F (+93° C). Stainless steel or karbate is recommended.

Displacer suspension cable

Displacers are field adjustable at any point along the suspension cable. 10 feet (3 meters) 316 stainless steel is standard. Monel and hastelloy materials available. Consult the factory for longer lengths.

Available switch mechanisms

Displacer level switches are available with a range of different switch mechanisms — each designed for specific service conditions. Brief descriptions of the individual switch mechanisms and their application are given below.

Basic electrical ratings

Voltage	Switch Series and Non-Inductive Ampere Rating									
	A	B	C	D	E	HS	N	O	Q	T
120 VAC	13.00	15.00	15.00	10.00	4.00	5.00	13.00	15.00	15.00	4.00
240 VAC	6.50	15.00	15.00	—	2.00	5.00	6.50	15.00	15.00	2.00
24 VDC	10.00	6.00	10.00	10.00	—	5.00	—	—	6.00	—
120 VDC	10.00	0.50	1.00	10.00	4.00	0.50	10.00	1.00	0.50	4.00
240 VDC	5.00	0.25	0.50	3.00	2.00	0.25	5.00	0.50	0.25	2.00

Mercury switches
Series A, E, N and T

Mercury switches offer the advantage of quick visual inspection of contact conditions. **Series A** and **N** switches are a heavy duty units with high load carrying capability. **Series E** and **T** switches are specifically designed to provide greater vibration resistance.

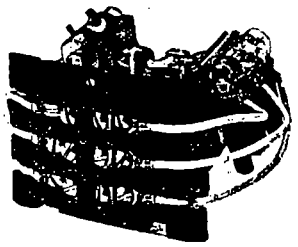

Series A, E, N and T Mercury Switches

Dry contact switches
Series B, C, D, O and Q

These switches are specified in applications where mercury must be avoided, such as in nuclear power plant installations. **Series B, C, O** and **Q** switches are general purpose units with electrical ratings dependent upon maximum liquid temperature. **Series D** switch is designed for high DC current applications.

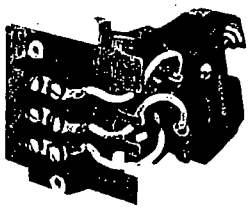

Series B, C, D, O and Q Dry Contact Switches

Pneumatic switches
Series J and K

Pneumatic switches are employed in process industry applications where electrical power is not available, or to satisfy safety requirements. **Series J** bleed type switch is intended for general purpose applications. **Series K** switch is specially designed to provide non-bleed operation with a high degree of vibration resistance.

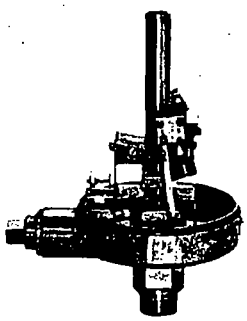

Series J Pneumatic Switch

Hermetically sealed switches
Series HS

Hermetically sealed switches are ideal for use where salt and other corrosive atmospheres are found. **Series HS** switches feature a positively pressurized capsule for the entire switch mechanism including contacts. Available in two models, one with easy access terminals, another with 12" (305 mm) long exposed wiring leads which may be field connected away from the switch enclosure.

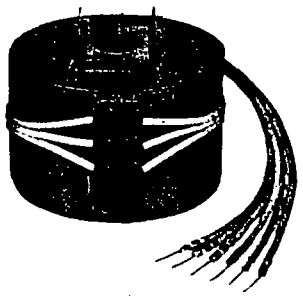

Series HS Hermetically Sealed with Wiring Leads

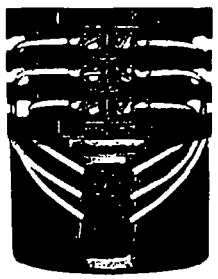

Series HS Hermetically Sealed

Switch enclosures

Electric switch mechanisms are available with a choice of dual conduit connection enclosure design. NEMA 4X enclosure, supplied with a polymer coated aluminum cover, is corrosion resistant for non-hazardous areas.

NEMA 4X/7/9 aluminum enclosures are designed to meet Class I, Div. 1, Grps. B, C and D. A Class I, Div. 1, Group B enclosure is also available.

Housing heaters and drains are available for some enclosures. Consult the factory for these options.

Pneumatic switch mechanisms are available with a NEMA 1 enclosure.

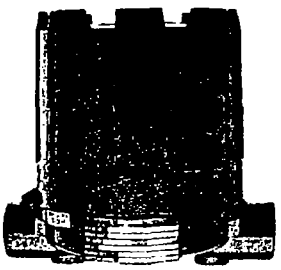

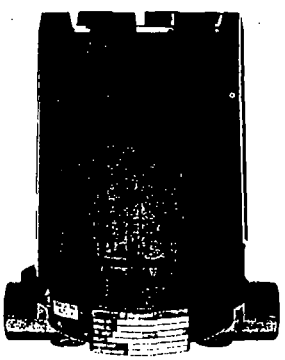

NEMA 4X Enclosure
NEMA 4X/7/9 Enclosure
NEMA 4X/7/9 — Group B Enclosure

Single switch models

Series A10
Pump or valve control
Wide differential type

These wide differential units are factory calibrated to actuate as a liquid level reaches a given displacer and to remain actuated until the level reaches a second displacer.

The minimum differential band is approximately 6.00 (152) inches in water and varies somewhat with liquid specific gravity. The maximum differential is determined by the length of the displacer suspension cable.

Series A15
Level alarm applications
Narrow differential type

These instruments are factory calibrated to operate over a narrow level differential band and are ideally suited for liquid level alarm applications, on either high or low level.

The operating level is fully adjustable by simply repositioning the displacer along its suspension cable. The differential band varies slightly with liquid specific gravity.

Specific gravity limits *

Part No. Code	Liquid Temp.		Series A thru E, J and K Switches		
	° F	° C	Porcelain	Stainless Steel	Karbate
A10	100	38	0.60 to 1.20	0.60 to 1.20	0.60 to 1.20
	200	93	0.70 to 1.20	0.70 to 1.20	0.70 to 1.20
	300	149	0.80 to 1.20	0.80 to 1.20	0.80 to 1.20
	400	204	1.00 to 1.20	0.90 to 1.20	—
	500	260	1.10 to 1.20	1.00 to 1.20	—
A15	100	38	0.60 to 2.40	0.40 to 1.65	0.40 to 1.65
	200	93	0.62 to 2.40	0.40 to 1.65	0.45 to 1.65
	300	149	0.65 to 2.40	0.50 to 1.65	0.50 to 1.65
	400	204	0.70 to 2.40	0.55 to 1.65	—
	500	260	0.75 to 2.40	0.60 to 1.65	—

* Specific gravity limits do not apply to floating roof top units.

Expedite ship plan

Many standard units and options are available for quick shipment, within one week after factory receipt of a purchase order, through the Expedite Ship Plan (ESP). The most popular models and options covered by ESP service are conveniently color coded below. To take advantage of ESP, simply match color coded model number codes and options; standard dimensions apply. Contact your local representative for lead times on other products and options.

Selection data

Displacer switches are identified by an alpha-numeric part number system. The part number provides exact specification of unit configuration, materials, switches and other options vital to the performance and function of the instrument. The system is comprised of five distinct components, each of which describes a specific part or feature of the instrument. A definition of each component is given below.

Part number construction

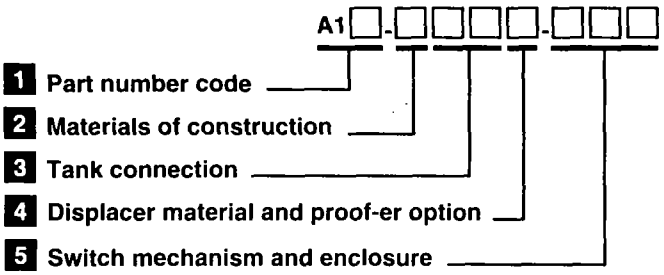

1 Part number code

Description	Part Number Code
Wide Differential	A10 ①
Narrow Differential	A15

① Not available with displacer material and proof-er option codes K, L, M and N.

2 Materials of construction

Support Spring	Trim	E-Tube Mtg. Nut	Displacer Clamps/ Susp. Cable	Magnetic Sleeve	Code
Inconel	300 Series SS	Carbon Steel	316 SS	400 Series SS	1
				316 SS	2 ①
Inconel	316 SS	316 SS	316 SS	316 SS	4 ①
Inconel	300 Series SS	Carbon Steel	Monel	400 Series SS	5 ①
			Hastelloy		6 ①
Inconel	316 SS	316 SS	316 SS	316 SS	M ①② NACE Const.
Inconel	300 Series SS	316 SS	316 SS	316 SS	N ①② NACE Const.

② Not available with displacer material and proof-er option codes D, E, F, G, H and J.

3 Tank connection

Tank Connection ③	Code
2½" NPT Threaded	E2
3" 125 lb. Cast Iron Flange ④⑥⑦	G2
3" 150 lb. Steel Flange ⑤⑥	G3
4" 125 lb. Cast Iron Flange ④⑦	H2
4" 150 lb. Steel Flange ⑤	H3
4" 300 lb. Steel Flange ⑤	H4
6" 125 lb. Cast Iron Flange ④⑦	K2
6" 150 lb. Steel Flange ⑤	K3
6" 300 lb. Steel Flange ⑤	K4

4 Displacer material and proof-er* option

Proof-er Type	Displacer Material			Roof-Top Displacer Mat'l Model A15 only	
	Porcelain	316 SS	Karbate	Lead	SS
Without Proof-er	A	B	C	K ④	M ④
Low Pressure	D ④	E ④	F ④	L ④	N ④
Medium Pressure	G ④	H ④	J ④	—	—

* Proof-er option constructed of carbon steel material.

③ Pressure/temperature ratings on page 1. Flanges are ANSI type.
④ Not available with material of construction codes M and N.
⑤ 316 SS flange is provided with material of construction code 4 and M.
⑥ Not available with displacer material and proof-er option codes K, L, M and N.
⑦ Not available with material of construction code 4.

5 Electric switch mechanism and enclosure ⑪

Switch Description ⑧	Max. ⑩ Process Temp. ° F (°C)	One Set Point	A10 Codes			A15 Codes		
			NEMA 4X	NEMA 4X/7/9		NEMA 4X	NEMA 4X/7/9	
			Aluminum Polymer Coated	Aluminum Polymer Coated	Class I Div. 1, Group B	Aluminum Polymer Coated	Aluminum Polymer Coated	Aluminum Class I Div. 1, Group B
Series A Mercury Switch	500 (260)	SPDT	AAB	AKB	AKK	AAQ	AKQ	AKS
		DPDT	ADB	ANB	ANK	ADQ	ANQ	ANS
Series B Snap Switch	250 (121)	SPDT	BAB	BKB	BKK	BAQ	BKQ	BKS
		DPDT	BDB	BNB	BNK	BDQ	BNQ	BNS
Series C Snap Switch	450 (232)	SPDT	CAB	CKB	CKK	CAQ	CKQ	CKS
		DPDT	CDB	CNB	CNK	CDQ	CNQ	CNS
Series D Snap Switch For DC Current Applications	250 (121)	SPDT	DAB	DKB	DKK	DAQ	DKQ	DKS
		DPDT	DDB	DNB	DNK	DDQ	DNQ	DNS
Series E Vibration Resistant Mercury Switch	500 (260)	SPDT	EAB	EKB	EKK	EAQ	EKQ	EKS
		DPDT	EDB	ENB	ENK	EDQ	ENQ	ENS
Series HS Hermetically Sealed 5 amp Snap Switch w/ Wiring Leads	500 (260)	SPDT	HMH	HMJ	HMK	HMB	HMC	HEK
		DPDT	HMR	HMS	HMT	HME	HMF	HET
Series HS Hermetically Sealed 5 amp Snap Switch w/ Terminal Block	500 (260)	SPDT	HM2	HM3	HM4	HM2 ⑨	HM3 ⑨	HM4 ⑨
		DPDT	HM6	HM7	HM8	HM6 ⑨	HM7 ⑨	HM8 ⑨

⑧ Uncontrolled housing heater available in NEMA 4X and NEMA 4X/7/9 enclosures. Drain available in NEMA 4X/7/9 enclosures. Consult factory for standard part numbers.
⑨ Available with a 6" tall cover only.
⑩ Process temperature based on +100° F (+38° C) ambient.
⑪ Consult factory for NEMA 4X/7/9 cast iron housings.

5 Pneumatic switch mechanism and enclosure

Switch Description	Maximum Supply Pressure		Maximum Process Temperature		Bleed Orifice Diameter		A10 Codes	A15 Codes
	PSIG	Bar	° F	° C	Inches	mm	NEMA 1	NEMA 1
Series J Bleed Type Pneumatic Switch	100	7	400	204	.063	1.6	JGF	JDE
	60	4	400	204	.094	2.3	JHF	JEE
Series K Non-Bleed Pneumatic Switch	100	7	400	204	—	—	KOF	KOE

Dual switch models

Series B10
Wide differential type

These wide differential tandem units are factory calibrated with a choice of several operating sequences, designed to meet virtually any applications.

Series B15
Narrow differential type

These instruments utilize two switches, each actuated at a different level and each calibrated with a narrow differential band.

Operating sequences

Model B10 units are available with a choice of switch operating sequence. Five of the most popular sequences are described below. When ordering, specify operating sequence number and specific gravity of the liquid.

When ordering B10 units an operating sequence and specific gravity MUST be provided.

Specific gravity limits*

Part No. Code	Liquid Temp.		Series A thru E Switches		
	° F	° C	Porcelain	Stainless Steel	Karbate
B10	100	38	0.60 to 1.50	0.50 to 1.00	0.50 to 1.00
	200	93	0.64 to 1.50	0.50 to 1.00	0.50 to 1.00
	300	149	0.80 to 1.50	0.60 to 1.00	0.60 to 1.00
	400	204	1.00 to 1.50	0.72 to 1.00	—
	500	260	1.10 to 1.50	0.84 to 1.00	—
B15	100	38	0.95 to 1.20	0.70 to 1.20	0.70 to 1.20
	200	93	1.10 to 1.20	0.80 to 1.20	0.80 to 1.20
	300	149	—	0.90 to 1.20	0.90 to 1.20
	400	204	—	1.00 to 1.20	—
	500	260	—	1.04 to 1.20	—

Note: Each B10 instrument is factory calibrated to operate on a given specific gravity within the minimum and maximum values listed.
* Specific gravity limits do not apply to floating roof top units.

Plus alarm
Arrangement No. 1 - Fill with high level alarm

The bottom switch starts the fill cycle when the level reaches the bottom displacer. The fill cycle stops when the level rises to the top displacer. If level continues to rise, the top switch will activate an alarm.

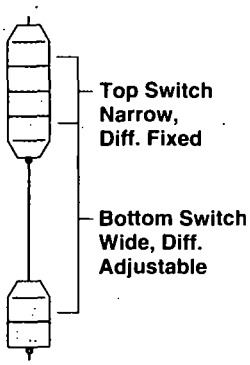

Arrangement No. 1

Plus alarm
Arrangement No. 2 - Drain with low level alarm

The top switch starts the drain cycle when level rises to the top displacer. The drain cycle stops when level falls below the top of the lower displacer. If level continues to fall, the bottom switch will activate an alarm.

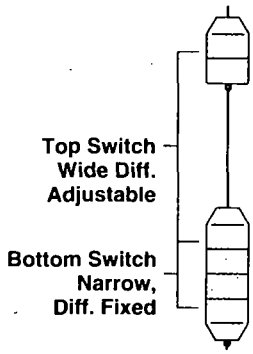

Arrangement No. 2

Control of two pumps of different capacity
Arrangement No. 3 - Two switch, wide differential fill or drain

The top switch cycles with level between the top and middle displacer. The bottom switch cycles with level between the middle and bottom displacer.

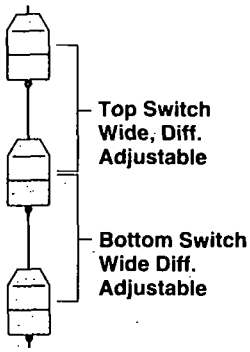

Arrangement No. 3

Control of two pumps
Arrangement No. 4

The top switch cycles with level between the top and bottom displacer. The bottom switch cycles with level between the middle and bottom displacer.

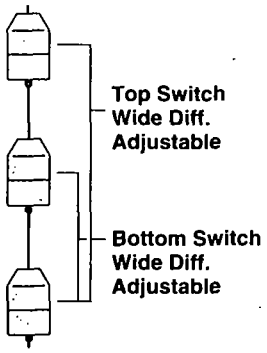

Arrangement No. 4

Control of two pumps
Arrangement No. 5

The top switch cycles with level between the top and middle displacer. The bottom switch cycles with level between the top and bottom displacer.

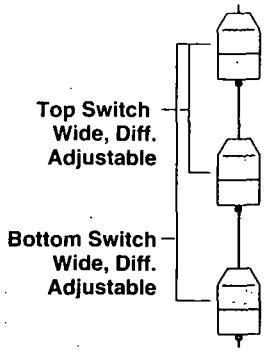

Arrangement No. 5

Selection data

Displacer switches are identified by an alpha-numeric part number system. The part number provides exact specification of unit configuration, materials, switches and other options vital to the performance and function of the instrument.

The system is comprised of five distinct components, each of which describes a specific part or feature of the instrument. A definition of each component is given below.

Part number construction

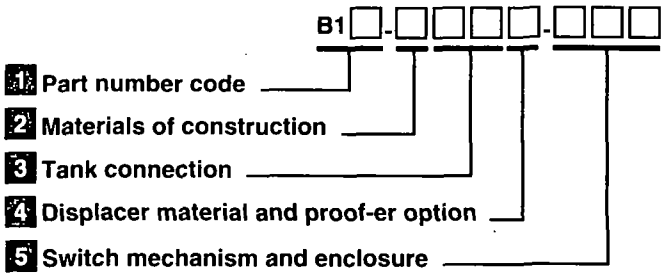

1 Part number code

Description	Part Number Code
Wide Differential **OPERATING SEQUENCE AND SPECIFIC GRAVITY MUST BE SPECIFIED**	B10 ①
Narrow Differential	B15

2 Materials of construction

Support Spring	Trim	E-Tube Mtg. Nut	Displacer Clamps/ Susp. Cable	Magnetic Sleeve	Code
Inconel	300 Series SS	Carbon Steel	316 SS	400 Series SS	1
				316 SS	2 ①
Inconel	316 SS	316 SS	316 SS	316 SS	4 ①
Inconel	300 Series SS	Carbon Steel	Monel	400 Series SS	5 ①
			Hastelloy		6 ①
Inconel	316 SS	316 SS	316 SS	316 SS	M ①⑫ NACE Const.
Inconel	300 Series SS	316 SS	316 SS	316 SS	N ①② NACE Const.

3 Tank connection

Tank Connection ③	Code
2½" NPT Threaded	E2
3" 125 lb. Cast Iron Flange ④⑥⑪	G2
3" 150 lb. Steel Flange ⑤⑥	G3
4" 125 lb. Cast Iron Flange ④⑪	H2
4" 150 lb. Steel Flange ⑤	H3
4" 300 lb. Steel Flange ⑤	H4
6" 125 lb. Cast Iron Flange ④⑪	K2
6" 150 lb. Steel Flange ⑤	K3
6" 300 lb. Steel Flange ⑤	K4

Expedite ship plan

Many standard units and options are available for quick shipment, within one week after factory receipt of a purchase order, through the Expedite Ship Plan (ESP). The most popular models and options covered by ESP service are conveniently color coded below. To take advantage of ESP, simply match color coded model number codes and options; standard dimensions apply. Contact your local representative for lead times on other products and options.

4 Displacer material and proof-er* option

Proof-er Type	Displacer Material			Roof-Top Displacer Mat'l Model B15 only	
	Porcelain	316 SS	Karbate	Lead	SS
Without Proof-er	A	B	C	K ④	M ④
Low Pressure	D ④	E ④	F ④	L ④	N ④

* Proof-er option constructed of carbon steel material.

5 Electric switch mechanism and enclosure ⑩

Switch Description ⑦⑧	Max. ⑨ Process Temp. ° F (° C)	Two Set Points	Switch Enclosure		
			NEMA 4X	NEMA 4X/7/9	
			Alum. Polymer Coated	Alum. Polymer Coated	Alum. Class I Div. 1 Group B
Series A Mercury Switch	500 (260)	SPDT	ABB	ALB	ALK
		DPDT	AEB	AOB	AOK
Series B Snap Switch	250 (121)	SPDT	BBB	BLB	BLK
		DPDT	BEB	BOB	BOK
Series C Snap Switch	450 (232)	SPDT	CBB	CLB	CLK
		DPDT	CEB	COB	COK
Series D Snap Switch for DC Current Application	250 (121)	SPDT	DBB	DLB	DLK
		DPDT	DEB	DOB	DOK
Series E Vibration Resistant Mercury Switch	500 (260)	SPDT	EBB	ELB	ELK
		DPDT	EEB	EOB	EOK
Series HS 5 Amp Hermetically Sealed Snap Switch w/Wiring Leads	500 (260)	SPDT	HMM	HMN	HMP
		DPDT	HMX	HMY	HMZ

① Not available with displacer material and proof-er option codes K, L, M and N.
② Not available with displacer material and proof-er option codes D, E and F.
③ Pressure/temperature ratings on page 1. Flanges are ANSI type.
④ Not available with material of construction codes M and N.
⑤ 316 SS flange is provided with material of construction code 4 and M.
⑥ Not available with displacer material and proof-er option codes K, L, M and N.
⑦ Uncontrolled housing heater available in NEMA 4X and NEMA 4X/7/9 enclosures. Drain available in NEMA 4X/7/9 enclosures. Consult factory for standard part numbers.
⑧ Pneumatic switch mechanisms and enclosures are unavailable for Series B10 and B15 switches.
⑨ Process temperature based on +100° F (+38° C) ambient.
⑩ Consult factory for NEMA 4X/7/9 cast iron housings.
⑪ Not available with material of construction code 4.

Tri-switch models

Series C10
Wide differential type

These wide differential type switches are designed to provide three electrically separate control signals in sequence as liquid level varies.

These units come factory calibrated with a choice of several operating sequences.

Series C15
Narrow differential type

These instruments are factory calibrated to operate over a narrow level band while providing three electrically separate control signals in sequences as liquid level varies.

Specific gravity limits

Part No. Code	Liquid Temp.		Series N, O, Q and T Switches		
	° F	° C	Porcelain	Stainless Steel	Karbate
C10	100	38	0.65 to 1.20	0.58 to 1.20	0.58 to 1.20
	200	93	0.95 to 1.10	0.76 to 1.00	0.76 to 1.00
	300	149	—	0.82 to 1.00	0.82 to 1.00
C15*	130	54	0.80 to 1.25	0.65 to 1.00	0.65 to 1.00

Note: Each C10/C15 instrument is factory calibrated to operate on a given specific gravity within the minimum and maximum values listed.

*Consult factory for high temperatures.

Part number construction

G3 A QCB

X C1 5 - 1 □□□ - □□□

1 Part number code
2 Materials of construction
3 Tank connection and displacers
4 Switch mechanism and enclosure

1 Part number code

Description	Part Number Code
Wide Differential **OPERATING SEQUENCE AND SPECIFIC GRAVITY MUST BE SPECIFIED**	C10
Narrow Differential **SPECIFIC GRAVITY MUST BE SPECIFIED**	C15

2 Materials of construction

Support Spring	Trim	E-Tube Mtg. Nut	Displacer Clamps/ Susp. Cable	Magnetic Sleeve	Code
Inconel	300 Series SS	Carbon Steel	316 SS	400 Series SS	1
				316 SS	2
Inconel	316 SS	316 SS	316 SS	316 SS	4
Inconel	300 Series SS	Carbon Steel	Monel	400 Series SS	5
			Hastelloy		6
Inconel	316 SS	316 SS	316 SS	316 SS	M NACE Const.
Inconel	300 SS	316 SS	316 SS	316 SS	N NACE Const.

① Pressure/temperature ratings on page 1. Flanges are ANSI type.
② Not available with material of construction codes M and N.

3 Tank connection and displacers

Tank Connection ①	Displacer Material		
	Porcelain	316 SS	Karbate
2½" NPT Threaded	E2A	E2B	E2C
3" 125 lb. Cast Iron Flange ②⑦	G2A	G2B	G2C
3" 150 lb. Steel Flange ③	G3A	G3B	G3C
4" 125 lb. Cast Iron Flange ②⑦	H2A	H2B	H2C
4" 150 lb. Steel Flange ③	H3A	H3B	H3C
4" 300 lb. Steel Flange ③	H4A	H4B	H4C
6" 125 lb. Cast Iron Flange ②⑦	K2A	K2B	K2C
6" 150 lb. Steel Flange ③	K3A	K3B	K3C
6" 300 lb. Steel Flange ③	K4A	K4B	K4C

③ 316 SS flange is provided with material of construction code 4 and M.
④ Pneumatic switch mechanisms and enclosures are unavailable for Series C10 and C15 switches.
⑤ Process temperature based on +100° F (+38° C) ambient.
⑥ Consult factory for NEMA 4X/7/9 cast iron housings.
⑦ Not available with material of construction code 4.

4 Electric switch mechanism and enclosure ⑥

Switch Desc. ④	Max. ⑤ Process Temp. ° F (°C)	Three Set Points	Switch Enclosure					
			NEMA 4X		NEMA 4X/7/9			
			Aluminum Polymer Coated	Aluminum With Heater	Aluminum Polymer Coated	Aluminum With Heater	Aluminum With Drain	Aluminum Class I, Div.1 Group B
Series N Mercury Switch	300 (149)	SPDT	NCB	NHB	NMB	NRB	NWB	NMN
		DPDT	NEB	NJB	NKB	NLB	NNB	NKN
Series O Snap Switch	300 (149)	SPDT	OCB	Not Avail.	OMB	Not Avail.	OWB	OMN
		DPDT	OEB		OKB		ONB	OKN
Series Q Snap Switch	250 (121)	SPDT	QCB	QHB	QMB	QRB	QWB	QMN
		DPDT	QEB	QJB	QKB	QLB	QNB	QKN
Series T Vib. Res. Mercury Switch	300 (149)	SPDT	TCB	TXB	TMB	TRB	TWB	TMN
		DPDT	TYB	TJB	TKB	TLB	TNB	TKN

Operating sequences

Series C10 units are factory calibrated with a choice of switch operating sequence.

When ordering C10 units an operating sequence and specific gravity MUST be provided.

Series C10

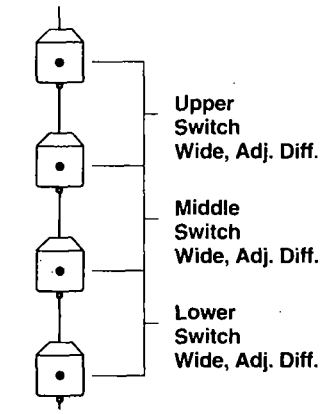

Arrangement "A"

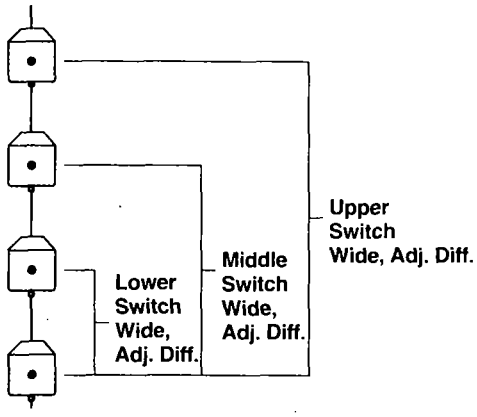

Arrangement "B"

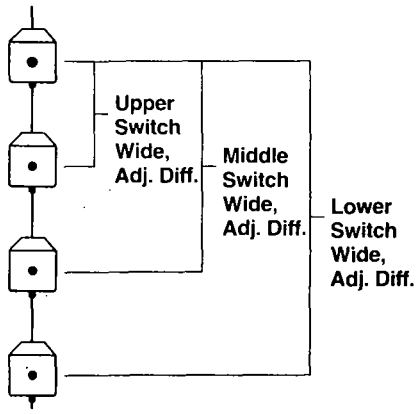

Arrangement "C"

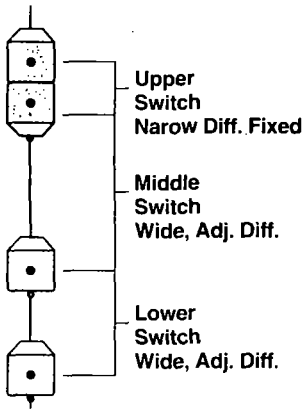

Arrangement "D"

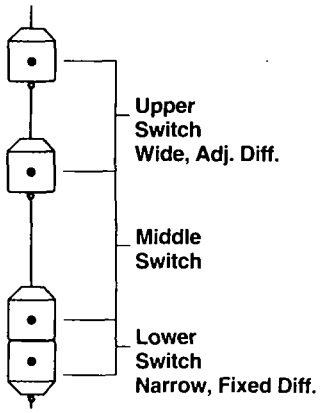

Arrangement "E"

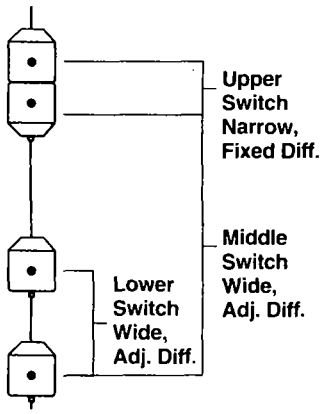

Arrangement "F"

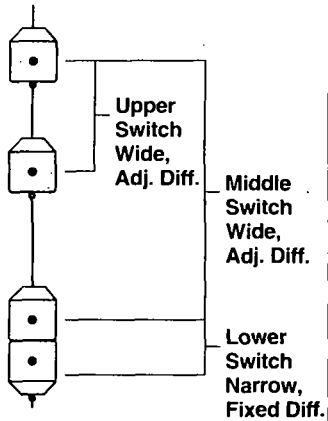

Arrangement "G"

Series C15

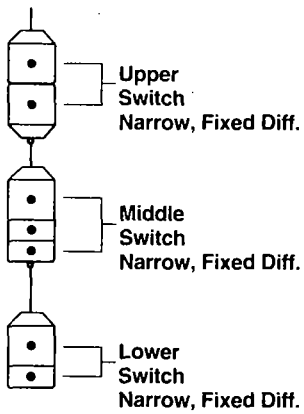

Dimensional specifications Inches (mm)

Series A10

OUTLINE DIMENSIONS								
Housing	Threaded Mounting				Flanged Mounting			
	A	B	C	D	A	B	C	D
NEMA 4X NEMA 4X/7/9 NEMA 4X/7/9 Group B	3.87 (98)	5.93 (151)	13.25 (337)	5.10 (130) Porc. 5.30 (135) SS/ Karb.	4.29 (109)	5.93 (151)	10.12 (257)	7.10 (180) Porc. 7.30 (185) SS/ Karb.
NEMA 1 Pneumatics	4.62 (117)	5.00 (127)	11.63 (295)		4.62 (117)	5.00 (127)	8.50 (216)	

Series A15

OUTLINE DIMENSIONS								
Housing	Threaded Mounting				Flanged Mounting			
	A	B	C	D	A	B	C	D
NEMA 4X NEMA 4X/7/9 NEMA 4X/7/9 Group B	3.87 (98)	5.93 (151)	11.06 (281)	5.00 (127) Porc. SS or Karb.	4.29 (109)	5.93 (151)	7.93 (201)	7.00 (178) Porc. SS or Karb.
NEMA 1 Pneumatics	4.62 (117)	5.00 (127)	9.63 (245)		4.62 (117)	5.00 (127)	6.50 (165)	

Series B10, B15

OUTLINE DIMENSIONS										
Housing	Threaded Mounting					Flanged Mounting				
	A	B	C	D		A	B	C	D	
				B10	B15				B10	B15
NEMA 4X NEMA 4X/7/9 NEMA 4X/7/9 Group B	3.87 (98)	5.93 (151)	13.25 (337)	6.20 (157) Porc. 5.80 (147) SS/ Karb.	5.60 (142) Porc. 5.80 (147) SS/ Karb.	4.29 (108)	5.93 (151)	10.12 (257)	8.20 (208) Porc. 7.80 (198) SS/ Karb.	7.60 (193) Porc. 7.80 (198) SS/ Karb.

CONDUIT CONNECTIONS E	
Electrical Switches	
NEMA 4X:	1" NPT
NEMA 4X/7/9:	1" NPT
Group B:	1" NPT
Pneumatic Switches	
NEMA 1:	¼" NPT

All housings rotatable 360°.

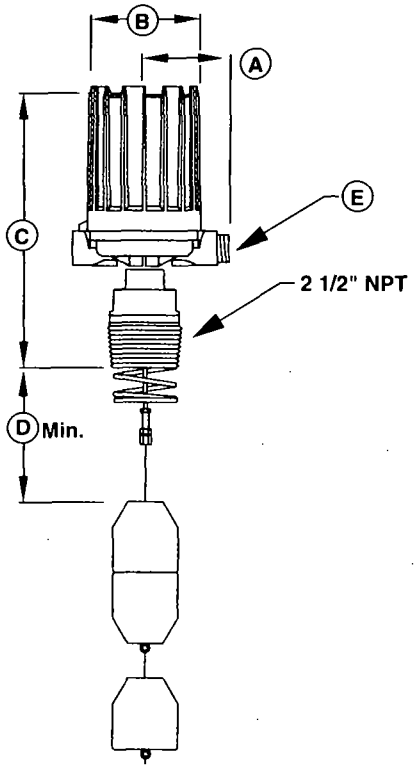

Series A10
with Threaded Mounting

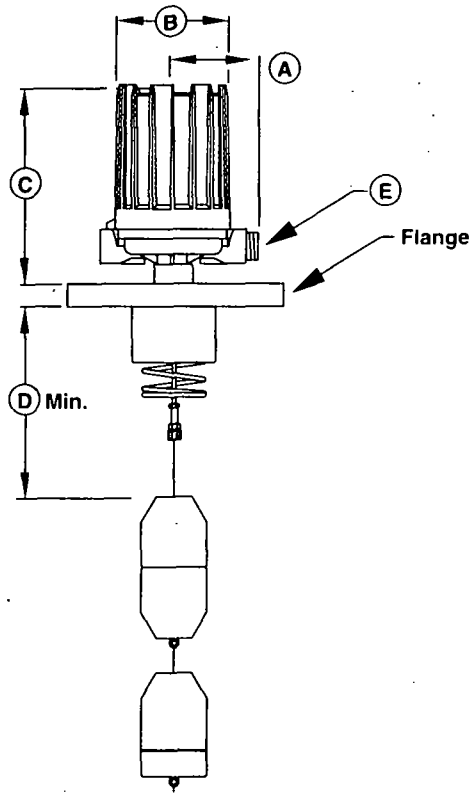

Series B15
with Flanged Mounting

Dimensional specifications Inches (mm) cont.

	A10	A15	B10	B15
Porcelain	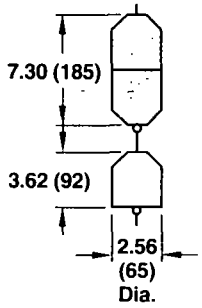	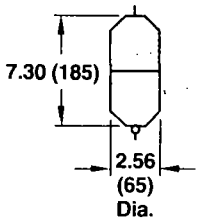	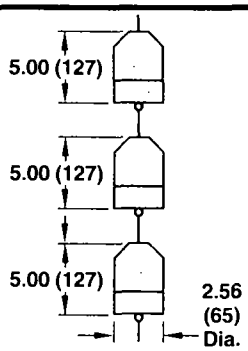	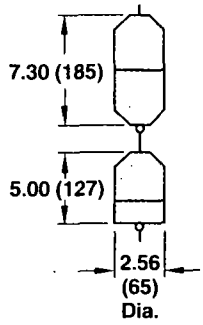
Karbate	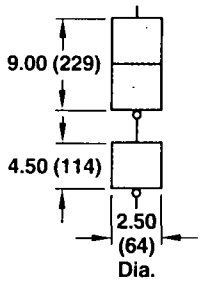	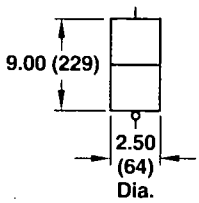	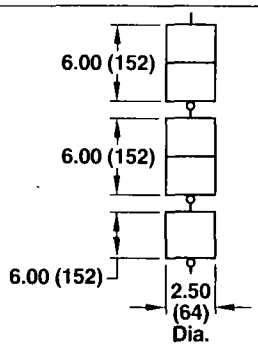	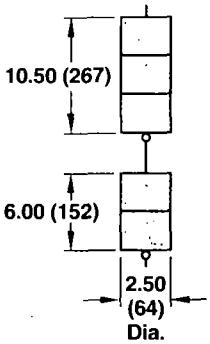
Stainless Steel	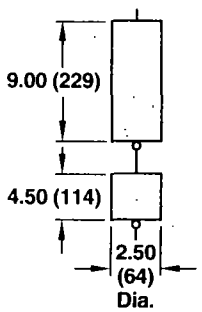	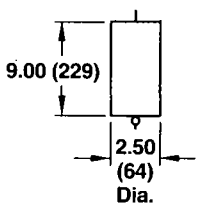	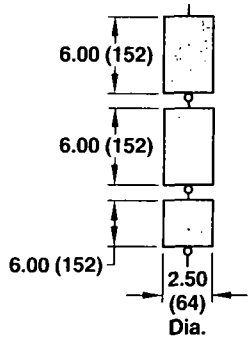	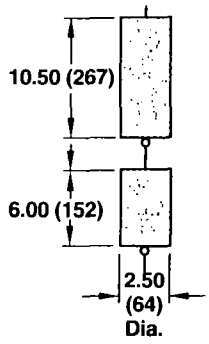

Dimensional specifications Inches (mm) cont.

Series C10, C15

OUTLINE DIMENSIONS										
Housing	Threaded Mounting					Flanged Mounting				
	A	B	C	D		A	B	C	D	
				C10	C15				C10	C15
NEMA 4X NEMA 4X/7/9 NEMA 4X/7/9 Group B	3.87 (98)	5.93 (151)	18.00 (457)	6.10 (157) Porc. 5.50 (140) SS/ Karb.	7.10 (180) Porc. 6.70 (170) SS/ Karb.	4.29 (108)	5.93 (151)	14.88 (378)	8.10 (206) Porc. 7.50 (191) SS/ Karb.	9.10 (231) Porc. 8.70 (221) SS/ Karb.

CONDUIT CONNECTIONS E	
Electrical Switches	
NEMA 4X:	1" NPT
NEMA 4X/7/9:	1" NPT
Group B:	1" NPT

All housings rotatable 360°.

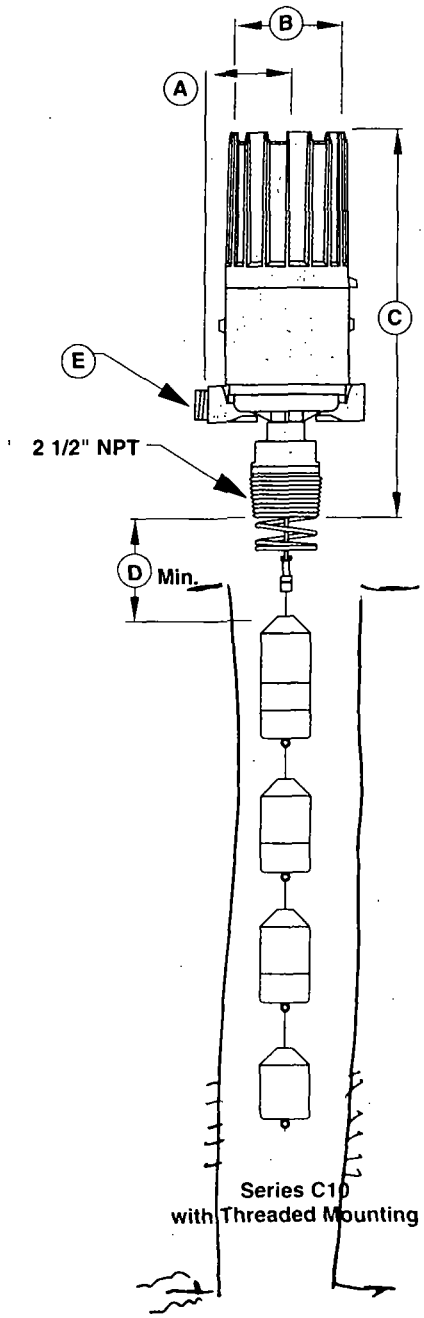

Series C10
with Threaded Mounting

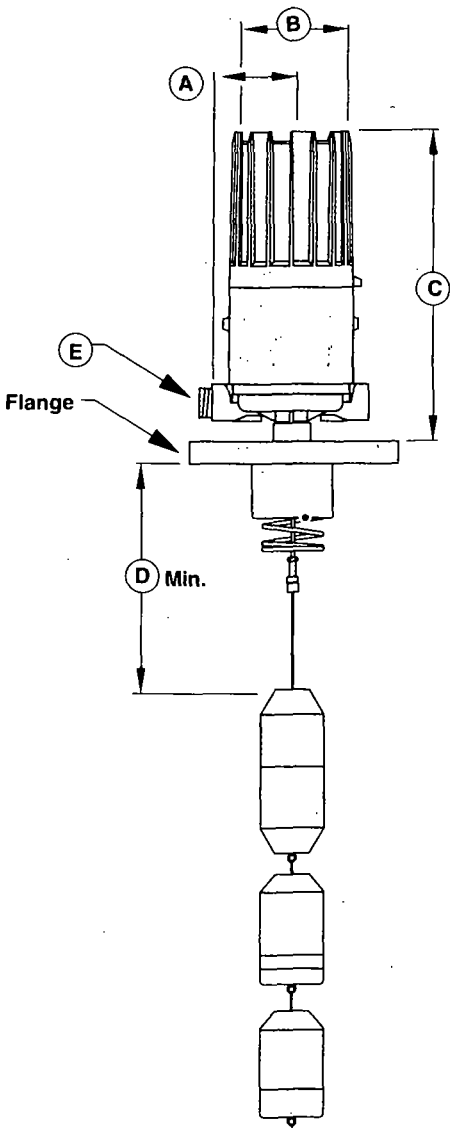

Series C15
with Flanged Mounting

Dimensional specifications Inches (mm) cont.

	MODEL C10 DISPLACER ARRANGEMENT	MODEL C15 DISPLACER ARRANGEMENT
Porcelain	A B C D E F G Ⓐ = 6.40 (163) Ⓑ = 5.00 (127) Ⓒ = 3.62 (92) Ⓓ = 11.40 (290) Ⓔ = 8.60 (218) NOTE: ALL DISPLACERS 2.56 (65) DIA.	7.20 (183) 6.40 (163) 5.00 (127) 2.56 (65) Dia.
Karbate and Stainless Steel	A B C D E F G Ⓕ = 6.00 (152) Ⓖ = 4.50 (114) Ⓗ = 12.00 (305) Ⓙ = 9.00 (229) NOTE: ALL DISPLACERS 2.50 (64) DIA.	9.00 (229) 7.50 (191) 6.00 (152) 2.50 (64) Dia.

Dimensional data inches (mm) cont.

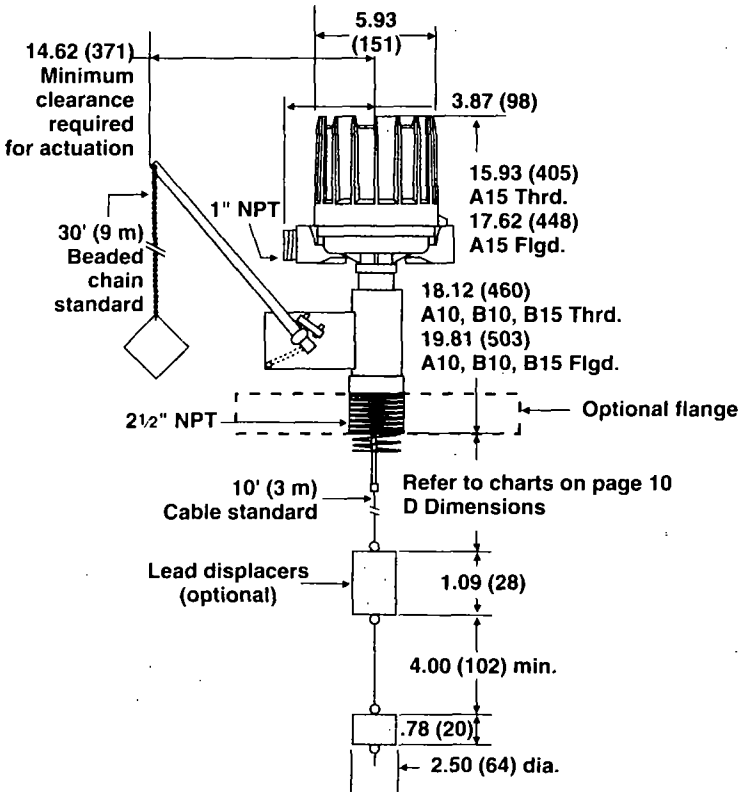

Typical Proof-er installation with Versa flange

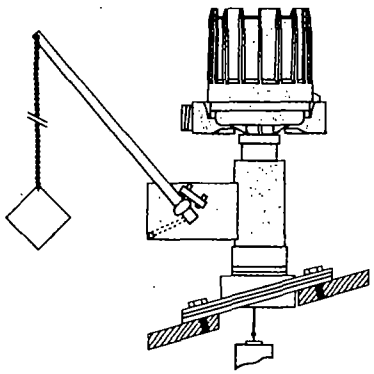

Versa flange assembly

Part number 089-5207-001

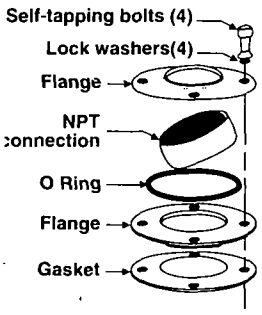

Versa flange bolt circle

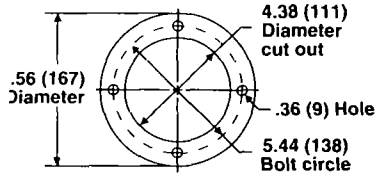

Actuating levels

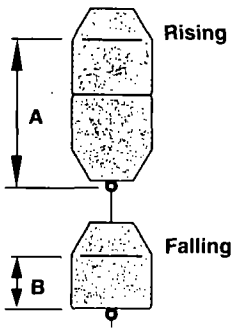

A10

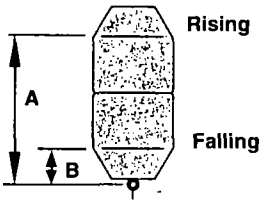

A15

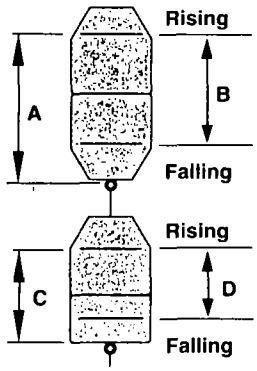

B15

A10 Standard actuating levels and liquid specific gravity — inches

Displacer Type	Liquid Temp. °F	0.60		0.70		0.80		0.90		1.00	
		A	B	A	B	A	B	A	B	A	B
Porcelain	100	5.3	1.5	4.1	1.2	3.2	1.1	2.5	1.0	2.0	0.9
	200	—	—	4.8	2.0	3.8	1.8	3.0	1.6	2.5	1.5
	300	—	—	—	—	4.3	2.4	3.4	2.1	2.9	1.9
	400	—	—	—	—	—	—	3.9	2.6	3.2	2.4
	500	—	—	—	—	—	—	—	—	—	—
Stainless Steel	100	7.0	2.4	5.3	2.0	4.1	1.8	3.1	1.6	2.4	1.4
	200	—	—	5.9	2.8	4.7	2.5	3.6	2.2	2.8	2.0
	300	—	—	—	—	5.1	3.1	4.0	2.7	3.2	2.4
	400	—	—	—	—	—	—	4.4	3.2	3.6	2.9
	500	—	—	—	—	—	—	—	—	3.9	3.3
Karbate	100	7.0	2.4	5.3	2.0	4.1	1.8	3.1	1.6	2.4	1.4
	200	—	—	5.9	2.8	4.7	2.5	3.6	2.2	2.8	2.0
	300	—	—	—	—	5.1	3.1	4.0	2.7	3.2	2.4

A15 Standard actuating levels and liquid specific gravity — inches

Displacer Type	Liquid Temp. °F	0.50		0.60		0.70		0.80		0.90		1.00	
		A	B	A	B	A	B	A	B	A	B	A	B
Porcelain	100	—	—	5.1	2.1	4.5	1.7	3.9	1.7	3.5	1.5	3.2	1.4
	200	—	—	5.6	2.6	4.9	2.1	4.3	2.1	3.8	1.8	3.5	1.7
	300	—	—	—	—	5.2	2.4	4.5	2.3	4.1	2.1	3.7	1.9
	400	—	—	—	—	5.6	2.8	4.8	2.6	4.3	2.3	3.9	2.1
	500	—	—	—	—	—	—	5.1	2.9	4.6	2.6	4.2	2.4
Stainless Steel	100	5.4	2.0	4.5	1.6	3.9	1.4	3.4	1.2	3.0	1.1	2.7	1.0
	200	6.0	2.6	5.0	2.1	4.3	1.8	3.7	1.6	3.3	1.4	3.0	1.3
	300	6.4	3.0	5.3	2.4	4.6	2.1	4.0	1.8	3.6	1.7	3.2	1.5
	400	6.9	3.5	5.7	2.8	4.9	2.4	4.3	2.1	3.8	1.9	3.4	1.7
	500	—	—	6.1	3.2	5.2	2.8	4.6	2.4	4.1	2.2	3.7	2.0
Karbate	100	5.4	2.0	4.5	1.6	3.9	1.4	3.4	1.2	3.0	1.1	2.7	1.0
	200	6.0	2.6	5.0	2.1	4.3	1.8	3.7	1.6	3.3	1.4	3.0	1.3
	300	6.4	3.0	5.3	2.4	4.6	2.1	4.0	1.8	3.6	1.7	3.2	1.5

B15 Standard actuating levels and liquid specific gravity — inches

Displacer Type	Liquid Temp. °F	0.70				0.80				0.95				1.00			
		A	B	C	D	A	B	C	D	A	B	C	D	A	B	C	D
Porcelain	100	—	—	—	—	—	—	—	—	5.5	3.5	3.7	2.7	5.0	3.3	3.5	2.7
Stainless Steel	100	9.5	4.5	4.9	3.6	7.6	3.9	4.3	3.2	5.5	3.3	3.6	2.7	4.9	3.2	3.4	2.5
	200	—	—	—	—	8.2	3.9	5.0	3.2	6.0	3.3	4.2	2.7	5.4	3.2	4.0	2.5
	300	—	—	—	—	—	—	—	—	6.4	3.3	4.7	2.7	5.7	3.2	4.4	2.5
	400	—	—	—	—	—	—	—	—	—	—	—	—	6.1	4.9	4.9	2.5
Karbate	100	9.5	4.5	4.9	3.6	7.6	3.9	4.3	3.2	5.5	3.3	3.6	2.7	4.9	3.2	3.4	2.5
	200	—	—	—	—	8.2	3.9	5.0	3.2	6.0	3.3	4.2	2.7	5.4	3.2	4.0	2.5
	300	—	—	—	—	—	—	—	—	6.4	3.3	4.7	2.7	5.7	3.2	4.4	2.5

C15 Standard actuating levels and liquid specific gravity — inches

Displacer Type	Liquid Temp. °F	1.00						1.10						1.20						1.25					
		A	B	C	D	E	F	A	B	C	D	E	F	A	B	C	D	E	F	A	B	C	D	E	F
Porcelain	0 to +130	0.9	3.3	0.8	4.0	0.7	4.6	0.9	3.1	1.0	3.8	1.1	4.2	0.9	2.9	1.1	3.7	1.6	4.5	0.8	2.8	0.9	3.3	1.1	3.9
SS or Karbate	0 to +130	1.1	3.6	1.0	4.0	1.0	4.6	—	—	—	—	—	—	—	—	—	—	—	—	—	—	—	—	—	—

Actuating levels cont.

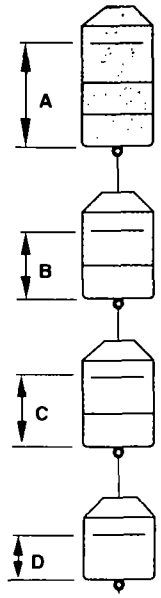

C10
Arrangement A,B,C

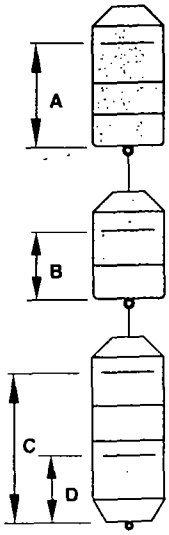

C10
Arrangement E and G

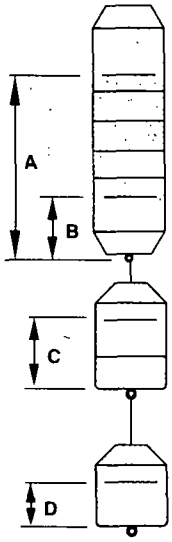

C10
Arrangement D and F

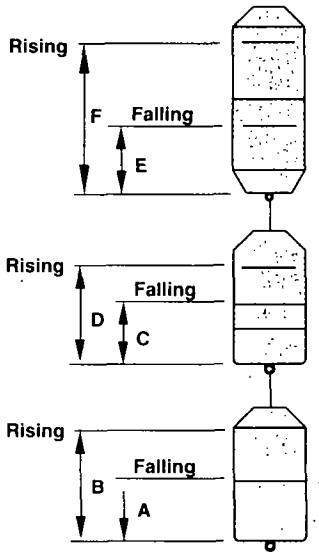

C15

C10 Arrangements A, B, C, E, G, D and F Standard actuating levels and liquid specific gravity — inches

Model	Displacer Material	Lqd. Temp. F	0.58				0.60				0.70				0.80			
			A	B	C	D	A	B	C	D	A	B	C	D	A	B	C	D
C10 Arrgmt. A,B,C, E and G	Porcelain	100	—	—	—	—	—	—	—	—	2.5	2.2	2.2	2.0	2.3	2.0	1.9	1.7
		200	—	—	—	—	—	—	—	—	—	—	—	—	—	—	—	—
	SS or Karbate	100	4.5	3.7	3.2	2.3	3.8	3.2	3.0	2.2	4.2	3.8	2.1	1.9	1.8	2.2	1.3	1.7
		200	—	—	—	—	—	—	—	—	—	—	—	—	3.2	2.9	2.5	2.3
		300	—	—	—	—	—	—	—	—	—	—	—	—	—	—	—	—
C10 Arrgmt. D and F	Porcelain	100	—	—	—	—	—	—	—	—	7.5	2.6	2.2	2.0	6.9	2.4	1.9	1.7
		200	—	—	—	—	—	—	—	—	—	—	—	—	—	—	—	—
	SS or Karbate	100	9.9	3.7	3.2	2.3	9.2	3.2	3.0	2.2	8.9	3.8	2.1	1.9	6.7	2.1	1.3	1.7
		200	—	—	—	—	—	—	—	—	—	—	—	—	7.4	2.9	2.5	2.3
		300	—	—	—	—	—	—	—	—	—	—	—	—	—	—	—	—

C10 Arrangements A, B, C, E, G, D and F Standard actuating levels and liquid specific gravity — inches

Model	Displacer Material	Lqd. Temp. F	0.90				1.00				1.10				1.20			
			A	B	C	D	A	B	C	D	A	B	C	D	A	B	C	D
C10 Arrgmt. A,B,C, E and G	Porcelain	100	3.0	2.4	2.7	1.5	1.4	1.4	2.1	1.4	3.0	2.6	2.5	1.2	1.7	1.7	2.1	1.1
		200	—	—	—	—	3.2	2.7	2.8	1.7	1.7	1.7	2.3	1.6	—	—	—	—
	SS or Karbate	100	3.1	3.2	2.5	1.5	1.3	1.9	1.8	1.3	3.1	3.2	2.5	1.3	1.6	2.2	1.9	1.2
		200	3.6	3.6	1.7	2.0	1.7	2.3	1.1	1.8	—	—	—	—	—	—	—	—
		300	3.4	3.0	2.4	2.7	1.6	1.8	1.7	2.4	—	—	—	—	—	—	—	—
C10 Arrgmt. D and F	Porcelain	100	6.6	2.8	2.7	1.5	5.2	1.8	2.1	1.4	6.1	3.0	2.5	1.2	5.0	2.1	2.1	1.1
		200	—	—	—	—	6.2	3.1	2.8	1.7	5.2	2.1	2.3	1.6	—	—	—	—
	SS or Karbate	100	7.2	3.2	2.5	1.5	5.5	1.9	1.8	1.3	6.4	3.2	2.5	1.3	5.2	2.2	1.9	1.2
		200	7.6	3.6	1.7	2.0	5.9	2.3	1.1	1.8	—	—	—	—	—	—	—	—
		300	7.0	3.0	2.4	2.7	5.4	1.8	1.7	2.4	—	—	—	—	—	—	—	—

C15 Standard actuating levels and liquid specific gravity — inches

Displacer Type	Liquid Temp. ° F	0.65						0.70						0.80						0.90					
		A	B	C	D	E	F	A	B	C	D	E	F	A	B	C	D	E	F	A	B	C	D	E	F
Porcelain	0 to +130	—	—	—	—	—	—	—	—	—	—	—	—	0.9	3.8	1.0	5.3	1.4	6.2	1.0	3.6	1.4	5.0	1.9	6.2
SS or Karbate	0 to +130	1.4	4.9	2.0	6.1	2.2	7.7	1.3	4.6	1.6	5.5	1.6	6.7	1.1	4.3	1.6	5.2	2.0	6.5	1.2	4.0	1.8	5.2	2.6	6.6

Product warranty

All Magnetrol level and flow controls are warranted free of defects in materials or workmanship from the date of original factory shipment. Mechanical controls are warranted for five full years; electronic controls for one full year.

If returned within the warranty period; and, upon factory inspection of the control, the cause of the claim is determined to be covered under the warranty; then, Magnetrol will repair or replace the control at no cost to the purchaser (or owner) other than transportation.

Magnetrol shall not be liable for misapplication, labor claims, direct or consequential damage or expense arising from the installation or use of equipment. There are no other warranties expressed or implied, except special written warranties covering some Magnetrol products.

Quality assurance

The quality assurance system in place at Magnetrol guarantees the highest level of quality throughout the company. Magnetrol is committed to providing full customer satisfaction both in quality products and quality service.

Magnetrol's quality assurance system is registered to ISO 9001 and Z299.1 affirming its commitment to known international quality standards providing the strongest assurance of product/service quality available.

ASSURED QUALITY & SERVICE COST LESS

Magnetrol

5300 Belmont Road • Downers Grove, Illinois 60515-4499 • 630-969-4000 • Fax 630-969-9489
6291 Dorman Road • Mississauga, Ontario L4V-1H2 • 905-678-2720 • Fax 905-678-7407
Heikensstraat 6 • B 9240 Zele, Belgium • 052 45.11.11 • Telex 25944 • Fax 052 45.09.93
Regent Business Ctr., Jubilee Rd. • Burgess Hill, Sussex RH15 9TL U.K. • 01444-871313 • Fax 01444-871317

BULLETIN: 45-115.7
EFFECTIVE: April 1996
SUPERSEDES: November 1994

Magnetrol®
STI

IMPORTANT: RECORD THE SERIAL NUMBER OF THIS CONTROL WHEN INSTALLATION IS MADE. SOME PARTS ARE SPECIAL. TO INSURE EXACT REPLACEMENT GIVE SERIAL NUMBER. PRICES FURNISHED ON REQUEST.

REGISTERED ISO 9001/Z299.1 Lloyd's Quality & Service Cert Ltrs

Displacer Type Liquid Level Switches and Proof-er® Switches

Instruction Manual and Parts List

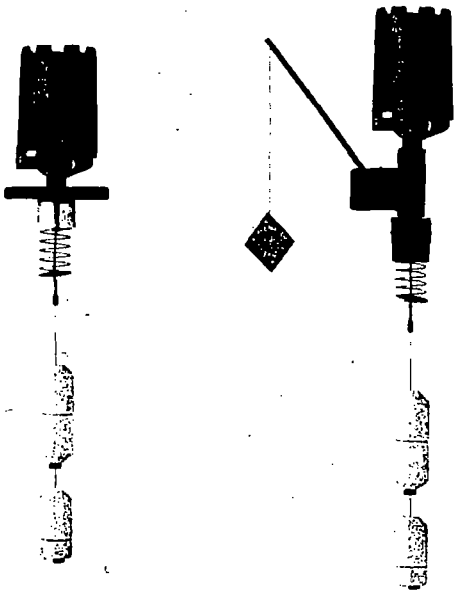

TABLE OF CONTENTS

	PAGE
Description	1
Operating principles	1
Model numbering	2-3
Installation	4
Wiring	4-5
Preventive maintenance	5
Troubleshooting	6
Model A10 dimensional data and actuating levels	7
Model A15 dimensional data and actuating levels	8
Model B10 dimensional data	9
Model B10 actuating levels	10-15
Model B15 dimensional data	16
Model B15 actuating levels	17
Model C10 dimensional data	18
Model C10 actuating levels	19-21
Model C15 dimensional data	22
Model C15 actuating levels	23
Proof-er dimensional data and replacement parts	24
Replacement parts	25
Specifications	26
Agency approvals	26
Product warranty	28
Quality assurance	28
Service policy	28
Return material procedure	28
Low voltage directive	28

DESCRIPTION

Displacement type level switches offer the industrial user a wide choice of alarm and control configurations. Each unit utilizes a simple buoyancy principle and is well suited for simple or complex applications.

OPERATING PRINCIPLE - DISPLACER CONTROLS

Operation is based upon buoyancy principle, whereby, a spring is loaded with weighted displacers which are heavier than the liquid. Immersion of the displacers in the liquid results in a buoyancy force change, which moves the spring upward. Figure 1 shows that the spring (G) moves only when the level moves on a displacer; spring movement (A) is always a small fraction of the level travel between displacers (B). A magnetic sleeve (C) is connected to the spring and operates within a non-magnetic enclosing tube (D). Spring movement causes the magnetic sleeve to attract a pivoted magnet (E), actuating a switch mechanism (F).

Switch points are set by moving a displacer up or down the displacer cable to the desired actuation point.

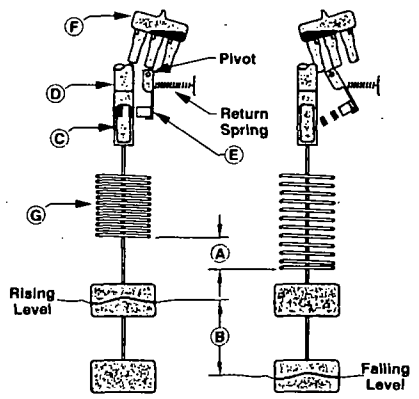

Figure 1 - Displacer Operating Principle

OPERATION — PROOF-ER CONTROL

The purpose of the Proof-er is to check the operation of a displacer control without having to raise the level in the tank. This is accomplished by pulling downward on the Proof-er chain. This causes the spring loaded lever arm to lift the switch actuator, simulating a high or high high level condition. When the chain is released, the Proof-er returns the actuator to its previous position to resume normal operation.

MODEL NUMBERING

PART NUMBER DESCRIPTION

Displacer switches are identified by an alphanumeric part numbering system. The part number provides exact specification of unit configuration, materials, switches and other options vital to the performance and function of the instrument.

PART NUMBER CONSTRUCTION

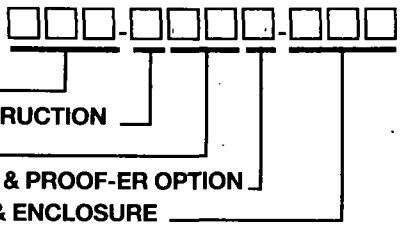

PART NUMBER CODE

Description	Part Number Code
Wide Differential, 1 switch	A10 ①
Narrow Differential, 1 switch	A15
Wide Differential, 2 switches	B10 ①
Narrow Differential, 2 switches	B15
Wide Differential, 3 switches	C10 ①
Narrow Differential, 3 switches	C15 ①

MATERIALS OF CONSTRUCTION

Support Spring	Trim	E-Tube Mtg. Nut	Displacer Clamps/ Susp. Cable	Magnetic Sleeve	Code
Inconel	300 Series SS	Carbon Steel	316 SS	400 Series SS	1
				316 SS	2 ①
Inconel	316 SS	316 SS	316 SS	316 SS	4 ①
Inconel	300 Series SS	Carbon Steel	Monel	400 Series SS	5 ①
			Hastelloy		6 ①
Inconel	316 SS	316 SS	316 SS	316 SS	M ①② NACE Const.
Inconel	300 Series SS	316 SS	316 SS	316 SS	N ①② NACE Const.

TANK CONNECTION

Tank Connection③	Code
2½" NPT Threaded	E2
3" 125 lb. Cast Iron Flange ④⑥⑦	G2
3" 150 lb. Steel Flange ⑤⑥	G3
4" 125 lb. Cast Iron Flange ④⑦	H2
4" 150 lb. Steel Flange ⑤	H3
4" 300 lb. Steel Flange ⑤	H4
6" 125 lb. Cast Iron Flange ④⑦	K2
6" 150 lb. Steel Flange ⑤	K3
6" 300 lb. Steel Flange ⑤	K4

DISPLACER MATERIAL AND PROOF-ER OPTION

Proof-er* Type	Displacer Material			Roof-Top Displacer Mat'l	
	Porcelain	316 SS	Karbate	Lead	SS
Without Proof-er	A	B	C	K ④	M ④
Low Pressure	D ④	E ④	F ④	L ④	N ④
Medium Pressure	G ④	H ④	J ④	—	—

* Proof-er option constructed of carbon steel material.

ELECTRIC SWITCH MECHANISM AND ENCLOSURE⑫ FOR MODELS A10 AND A15

Switch Description ⑧	Max. ⑪ Process Temp. ° F (°C)	One Set Point	A10 Codes			A15 Codes		
			NEMA 4X	NEMA 4X/7/9		NEMA 4X	NEMA 4X/7/9	
			Alum. Polymer Coated	Alum. Polymer Coated	Class I Div. 1, Group B	Alum. Polymer Coated	Alum. Polymer Coated	Class I Div.1, Group B
Series A Mercury Switch	500 (260)	SPDT	AAB	AKB	AKK	AAQ	AKQ	AKS
		DPDT	ADB	ANB	ANK	ADQ	ANQ	ANS
Series B Snap Switch	250 (121)	SPDT	BAB	BKB	BKK	BAQ	BKQ	BKS
		DPDT	BDB	BNB	BNK	BDQ	BNQ	BNS
Series C Snap Switch	450 (232)	SPDT	CAB	CKB	CKK	CAQ	CKQ	CKS
		DPDT	CDB	CNB	CNK	CDQ	CNQ	CNS
Series D Snap Switch For DC Current Applications	250 (121)	SPDT	DAB	DKB	DKK	DAQ	DKQ	DKS
		DPDT	DDB	DNB	DNK	DDQ	DNQ	DNS
Series E Vibration Resistant Mercury Switch	500 (260)	SPDT	EAB	EKB	EKK	EAQ	EKQ	EKS
		DPDT	EDB	ENB	ENK	EDQ	ENQ	ENS
Series HS Hermetically Sealed 5 amp Snap Switch w/ Wiring Leads	500 (260)	SPDT	HMH	HMJ	HMK	HMB	HMC	HEK
		DPDT	HMR	HMS	HMT	HME	HMF	HET
Series HS Hermetically Sealed 5 amp Snap Switch w/ Terminal Block	500 (260)	SPDT	HM2	HM3	HM4	HM2 ⑨	HM3 ⑨	HM4 ⑨
		DPDT	HM6	HM7	HM8	HM6 ⑨	HM7 ⑨	HM8 ⑨

MODEL NUMBERING cont.

PNEUMATIC SWITCH MECHANISM AND ENCLOSURE FOR MODELS A10 AND A15

Switch Description⑩	Maximum Supply Pressure		Maximum Process Temperature		Bleed Orifice Diameter		A10 Codes	A15 Codes
	PSIG	Bar	° F	° C	Inches	mm	NEMA 1	NEMA 1
Series J Bleed Type Pneumatic Switch	100	7	400	204	.063	1	JGF	JDE
	60	4	400	204	.094	2	JHF	JEE
Series K Non-Bleed Pneumatic Switch	100	7	400	204	—	—	KOF	KOE

ELECTRIC SWITCH MECHANISM AND ENCLOSURE⑫ FOR MODELS B10 AND B15

Switch Description ⑧⑩	Max.⑪ Process Temp. ° F (° C)	Two Set Points	Switch Enclosure		
			NEMA 4X	NEMA 4X/7/9	
			Alum. Polymer Coated	Alum. Polymer Coated	Class I Div. 1 Group B
Series A Mercury Switch	500 (260)	SPDT	ABB	ALB	ALK
		DPDT	AEB	AOB	AOK
Series B Snap Switch	250 (121)	SPDT	BBB	BLB	BLK
		DPDT	BEB	BOB	BOK
Series C Snap Switch	450 (232)	SPDT	CBB	CLB	CLK
		DPDT	CEB	COB	COK
Series D Snap Switch for DC Current Application	250 (121)	SPDT	DBB	DLB	DLK
		DPDT	DEB	DOB	DOK
Series E Vibration Resistant Mercury Switch	500 (260)	SPDT	EBB	ELB	ELK
		DPDT	EEB	EOB	EOK
Series HS 5 Amp Hermetically Sealed Snap Switch w/Wiring Leads	500 (260)	SPDT	HMM	HMN	HMP
		DPDT	HMX	HMY	HMZ

① Not available with displacer material and proof-er option codes K, L, M, and N.
② Not available with displacer material and proof-er option codes D, E, F, G, H, and J.
③ Pressure/temperature ratings on page 1. Flanges are ANSI type.
④ Not available with material of construction codes M and N.
⑤ 316 SS flange is provided with material of construction code 4 and M.
⑥ Not available with displacer material and Proof-er option codes K, L, M and N.
⑦ Not available with material of construction code 4.
⑧ Uncontrolled housing heater available in NEMA 4X and NEMA 4X/7/9 enclosures. Drain available in NEMA 4X/7/9 enclosures. Consult factory for standard part numbers.
⑨ Available with a 6" tall cover only.
⑩ Pneumatic switch mechanisms and enclosures are unavailable for Models B10, B15, C10 and C15 switches.
⑪ Process temperature based on +100° F (+38° C) ambient.
⑫ Consult factory for NEMA 4X/7/9 cast iron housings.

ELECTRIC SWITCH MECHANISM AND ENCLOSURE⑫ FOR MODELS C10 AND C15

Switch Desc. ⑩	Max. ⑪ Process Temp. ° F (° C)	Three Set Points	Switch Enclosure					
			NEMA 4X		NEMA 4X/7/9			
			Aluminum Polymer Coated	Aluminum With Heater	Aluminum Polymer Coated	Aluminum With Heater	Aluminum With Drain	Aluminum Class I, Div.1 Group B
Series N Mercury Switch	300 (149)	SPDT	NCB	NHB	NMB	NRB	NWB	NMN
		DPDT	NEB	NJB	NKB	NLB	NNB	NKN
Series O Snap Switch	300 (149)	SPDT	OCB	Not Avail.	OMB	Not Avail.	OWB	OMN
		DPDT	OEB		OKB		ONB	OKN
Series Q Snap Switch	250 (121)	SPDT	QCB	QHB	QMB	QRB	QWB	QMN
		DPDT	QEB	QJB	QKB	QLB	QNB	QKN
Series T Vib. Res. Mercury Switch	300 (149)	SPDT	TCB	TXB	TMB	TRB	TWB	TMN
		DPDT	TYB	TJB	TKB	TLB	TNB	TKN

INSTALLATION

UNPACKING

Top mounting displacer units are shipped from the factory with the displacer and cable assembly removed from the head assembly and packed separately in the same container.

CAUTION: *If reshipping to another location, displacer assembly must again be secured using same strap and wire assembly.*

After unpacking, inspect all components to see that no damage has occurred during shipment.

CAUTION: *The threaded connection link protruding from the head assembly is extremely fragile. DO NOT handle or place it in a position so that any amount of force is placed on the stem. Proper operation of the control requires that the stem is not damaged or bent.*

HANDLING

CAUTION: *Displacer spring and stem are fragile. DO NOT drop displacers into tank. Hand feed cable into position to avoid bending stem.*

MOUNTING

Adjust the displacers on the displacer cable for the desired switch actuating levels (instruction tag is attached to cable). Screw displacer cable fitting to threaded connection link protruding from the underside of control.

Be sure there are no tubes, rods, or other obstacles in the tank or vessel to interfere with the operation of the displacers. No guides into the tank are necessary unless liquid turbulence is excessive, in which case a guided pipe or tube should be at least 1" larger than the displacer diameter, open at the bottom end, and with several vent holes located above the maximum high level of the liquid.

Check the installation of pipe or tube to be certain it is plumb.

CAUTION: *Before attaching Magnetrol control to tank or vessel, using a level, check to see that tank mounting flange or spud is horizontal. Proper operation of the control depends on the switch housing being plumb.*

WIRING

WIRING

CAUTION: *Level controls are shipped from the factory with the enclosing tube tightened and the middle set screw, on the housing base, locked to the enclosing tube. Failure to loosen the set screw prior to repositioning the conduit connection may cause the enclosing tube to loosen, resulting in the possible leakage of the process liquid or vapor.*

NOTE: If control is equipped with pneumatic switch mechanism, disregard these instructions and refer to instruction bulletin on mechanism furnished for air (or gas) connections.

Most control switch housings are designed to provide 360° positioning of conduit outlet by loosening the set screw(s) located under the housing base. Diagrams of the control's internal electrical circuits (switching action between terminals) will be found in the switch mechanism instruction bulletin included.

1. Loosen set screw(s) at base of switch housing. Refer to Figure 2.
2. Switch housing may be rotated 360° to allow correct positioning of conduit outlet.
3. Tighten set screw(s) at base of switch housing.
4. Unscrew and remove switch housing cover. The threads have been lubricated to facilitate removal.

NOTE: On high temperature applications above 250° F (121° C), high temperature wire should be used between control and first junction box located in a cooler area. On non-hazardous applications, flexible conduit may be used between the control and the first junction box.

WIRING cont.

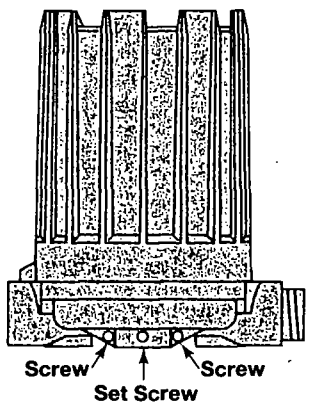

Figure 2
NEMA 4X, NEMA 4X/7/9, NEMA 4X/7/9 Group B

5. The switch terminals are located next to the conduit outlet to facilitate wiring. Bring supply wires through conduit outlet. Route extra wire around enclosing tube under the baffle plate, and connect them to the proper terminals. Refer to Figure 3 for a general wiring diagram. Switch specific information is found in the appropriate switch manual. Switch instruction manual numbers are as follows:

Switch Series Letter	Description	Bulletin No.
A, T	Standard Mercury Switch	42-683
B, C, D, O, Q	Dry Contact Switch	
E, N	Vibration Resistant Mercury Switch	
HS	Hermetically Sealed Snap Switch	42-694
J	Bleed Type Pneumatic Switch	42-685
K	Non-Bleed Type Pneumatic Switch	42-686

WIRING cont.

NOTE: For models with a Series HS switch with high temperature lead wire, the leads are routed out through the conduit opening by the factory. A suitable conduit box should be provided for the connection of the leads to the control wiring.

6. Dress wiring to ensure no interference or contact with tilt of switch, or replacement of switch housing cover.

   OBSERVE ALL APPLICABLE ELECTRICAL CODES AND PROPER WIRING PROCEDURES.

   Prevent moisture seepage into the enclosure by installing approved seal-drain fittings in the conduit run leading into the unit.

7. Test switch action by varying liquid level or manually moving displacers.

NOTE: If switch mechanism fails to function properly, check vertical alignment of control housing and consult installation bulletin on switch mechanism furnished.

8. Replace housing cover.
9. If control has been furnished with an explosion proof or moisture proof (gasketed) switch housing, it must be sealed at the conduit outlet with a suitable compound or non-hardening sealant to prevent entrance of air.

WIRING cont.

10. Check cover to base fit to be certain gasketed joint is tight. A positive seal is necessary to prevent infiltration of moisture laden air or corrosive gasses into switch housings.

***CAUTION:** In hazardous areas, do not power the unit until the conduit is sealed and the enclosure cover is screwed down securely.*

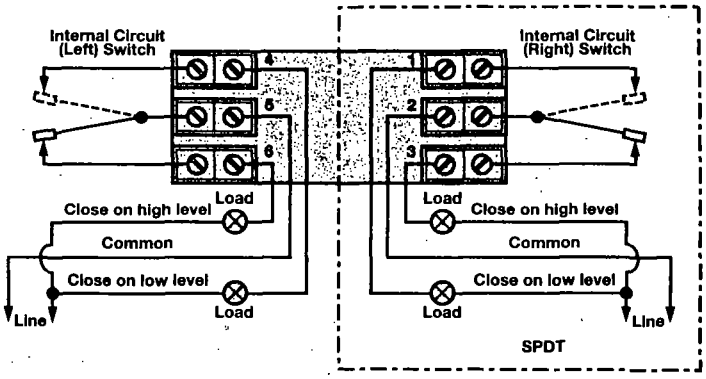

Figure 3
DPDT General Wiring Diagram

PREVENTIVE MAINTENANCE

If the following instructions are observed, your instrument will operate reliably.

WHAT TO DO

1. **Keep Control Clean**

   Be sure the switch housing cover is always in place on the control. This cover is designed to keep dust and dirt from interfering with switch mechanism operation. In addition, it protects against damaging moisture and acts as a safety feature by keeping bare wires and terminals from being exposed. Should the housing cover become damaged or misplaced, order a replacement immediately.

2. **Inspect Switch Mechanism, Terminals, and *Connections Monthly***

   a. Mercury switches may be visually inspected for short circuit damage. Check for small cracks in the glass tube containing the mercury. Such cracks can allow entrance of air into the tube causing the mercury to "oxidize". This is noticeable as the mercury will appear dirty and have a tendency to "string out" like water, instead of breaking into clear round pools. If these conditions exist, replace the mercury switch immediately.

   b. Dry contact switches should be inspected for excessive wear on actuating lever or misalignment of adjustment screw at point of contact between screw and lever.

   Such conditions can cause false switch actuating levels. Adjust switch mechanism to compensate (if possible) or replace switch.

   DO NOT operate your control with defective or maladjusted switch mechanism (refer to bulletin on switch mechanism furnished for service instructions).

WHAT TO DO CONT.

   c. Controls may sometimes be exposed to excessive heat or moisture. Under such conditions, insulation on electrical wire may become brittle, eventually breaking or peeling away. The resulting bare wires can cause short circuits. Check wiring carefully and replace at first sign of brittle insulation.

   d. Vibration may sometimes cause terminal screws to work loose. Check all terminal connections to be certain that screws are tight. Air (or gas) operating medium lines, subjected to vibration, may eventually crack or become loose at connections causing leakage. Check lines and connections carefully and repair or replace if necessary.

WHAT TO AVOID

1. **NEVER** leave switch housing cover off the control longer than necessary to make routine inspections.
2. **NEVER** use lubricants on pivots of switch mechanism. A sufficient amount of lubricant has been applied at the factory to ensure a lifetime of service. Further oiling is unnecessary, and will only tend to attract dust and dirt which can interfere with mechanism operation.
3. **NEVER** attempt to make adjustments or replace switches without reading instructions carefully. Certain adjustments provided for in displacer controls should not be attempted in the field. When in doubt, consult the factory or your local representative.
4. **NEVER** attempt to readjust magnetic attraction sleeve which is factory set. Tampering may cause failure of control while in service, even though manual operation actuates switch.

TROUBLESHOOTING

Usually the first indication of improper operation is failure of the controlled equipment to function – pump will not start or stop, signal lamps fail to light, etc. When these symptoms occur, whether at time of installation or during routine service thereafter, check the following external causes first.

- Fuses may be blown.
- Reset button(s) may need resetting.
- Power switch may be open.
- Controlled equipment may be faulty.
- Stem may be bent causing hang-up.
- Wiring, or medium lines, leading to control may be defective.

If a thorough inspection of these possible conditions fails to locate the trouble, proceed next to a check of the control's switch mechanism.

1. Pull disconnect switch or otherwise assure that electrical circuit(s) through the control is deactivated.
2. Remove switch housing cover.
3. Swing magnet assembly in and out by hand, checking carefully for any sign of binding. Assembly should require no force, however slight, to move it through its full swing.
4. If binding exists, magnet may be rubbing enclosing tube or pivot sockets may be overly tightened. Readjust pivot sockets as required until a slight amount of side play is evident. If magnet is rubbing, loosen magnet clamp screw and shift magnet position.
5. If switch magnet assembly swings freely and mechanism still fails to actuate, check installation of control to be certain it is within the specified three (3°) degrees of vertical. Use a spirit level on side of enclosing tube in two places, 90° apart.
6. If mechanism is equipped with a mercury switch, examine glass tube closely, as previously described in Preventive Maintenance section. If switch is damaged, replace it immediately.

NOTE: As a matter of good practice, spare switches should be kept on hand at all times.

If switch mechanism is operating satisfactorily, a test of the complete control's performance is the next likely step.

7. Reconnect power supply and carefully actuate switch mechanism manually, using a non-conductive tool on electrical switch mechanism, to determine whether controlled equipment will operate.

***CAUTION:** With electrical power on, care should be taken to avoid contact with switch leads and connections at terminal block.*

8. If controlled equipment responds to manual actuation test, trouble may be located in level sensing portion of the control (displacers, spring, stem, and magnetic attracting sleeve).

NOTE: Check first to be certain liquid is entering tank or vessel. A valve may be closed or pipe line plugged.

9. With liquid in tank or vessel, proceed to check level sensing action by removing switch housing assembly.

***CAUTION:** Be certain to pull disconnect switch or otherwise assure that electrical circuit(s) through control is deactivated. Close operating medium supply valve on controls equipped with pneumatic switch mechanisms.*

   a. Disconnect wiring from supply side of switch mechanism(s) and remove electrical conduit or operating medium line connections to switch housing.

   b. Relieve pressure from tank vessel and allow unit to cool.

   c. Remove switch housing assembly by loosening set screw located immediately below housing base.

10. With switch housing assembly removed, inspect attracting sleeve and inside of enclosing tube for excessive corrosion or solids build-up which could restrict movement, preventing sleeve from reaching field of switch magnet.
11. If trouble is still not located, proceed to remove the entire sensing unit from the tank or vessel by unbolting head flange or unscrewing mounting bushing. Inspect displacer assembly and all internal parts for any signs of damage. Check assembly for binding by supporting head flange or mounting bushing over the edge of a bench and move displacer assembly by hand.

NOTE: When in doubt about the condition or performance of a control, contact the factory or consult your local representative.

Proof-er

If the Proof-er is not functioning properly, listed below are the most probable problems and corrective action.

1. Proof-er does not return to the down position after it is activated.

CAUSE	REMEDY
Defective return spring.	Replace Spring.
Build-up between the shaft and housing restricting movement.	Clean Proof-er to remove build-up.
Handle stops are not adjusted properly.	Adjust handle stop screws in or out to allow the handle to move to the proper position.

2. Switch will not trip when Proof-er is activated.

CAUSE	REMEDY
The switch mechanism is defective and not the Proof-er.	Check switch mechanism.
Handle stops are not adjusted properly.	Adjust handle stop screws in or out to allow the handle to move to the proper position.

MODEL A10 DIMENSIONAL DATA AND ACTUATING LEVELS

DIMENSIONAL DATA cont. INCHES (MM)

Model A10

Outline Dimensions				
Displacer Type	Threaded Mounting		Flanged Mounting	
	A	B	A	B
Porcelain	5.00 (127)	122.00 (3098)	7.00 (177)	124.00 (3149)
Stainless Steel or Karbate	4.75 (120)	122.00 (3098)	6.75 (171)	124.00 (3149)

Displacer Type	C	D	E
Porcelain	2.56 (65)	7.25 (184)	3.62 (91)
Stainless Steel or Karbate	2.50 (63)	9.00 (228)	4.50 (114)

Electrical Connections
1/2" NPT
3/4" NPT
1" NPT
M20

A10 Standard actuating levels and liquid specific gravity

Displacer Type	Liquid Temp. °F	0.60		0.70		0.80		0.90		1.00	
		F	G	F	G	F	G	F	G	F	G
Porcelain	100	5.30 (134)	1.50 (38)	4.10 (104)	1.20 (30)	3.20 (81)	1.10 (27)	2.50 (63)	1.00 (25)	2.00 (50)	0.90 (22)
	200	—	—	4.80 (121)	2.00 (50)	3.80 (96)	1.80 (45)	3.00 (76)	1.60 (40)	2.50 (63)	1.50 (38)
	300	—	—	—	—	4.30 (109)	2.40 (60)	3.40 (86)	2.10 (53)	2.90 (73)	1.90 (48)
	400	—	—	—	—	—	—	3.40 (86)	2.60 (66)	2.90 (73)	2.40 (60)
Stainless Steel or Karbate	100	7.00 (177)	2.40 (60)	5.30 (134)	2.00 (50)	4.10 (104)	1.80 (45)	3.10 (78)	1.60 (40)	2.40 (60)	1.40 (35)
	200	—	—	5.90 (149)	2.80 (71)	4.70 (119)	2.50 (63)	3.60 (91)	2.20 (55)	2.80 (71)	2.00 (50)
	300	—	—	—	—	5.10 (129)	3.10 (78)	4.00 (101)	2.70 (68)	3.20 (81)	2.40 (60)
Stainless Steel	400	—	—	—	—	—	—	4.40 (111)	3.20 (81)	3.60 (91)	2.90 (73)
	500	—	—	—	—	—	—	—	—	3.90 (99)	3.30 (83)

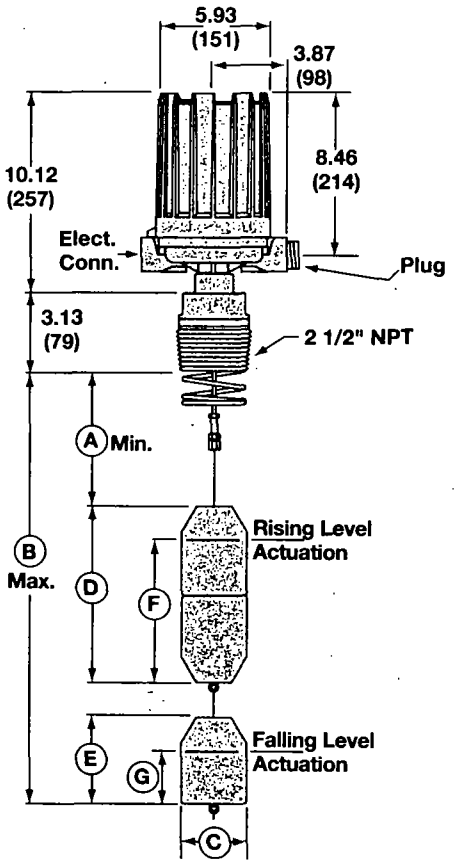

Model A10 with Threaded Mounting

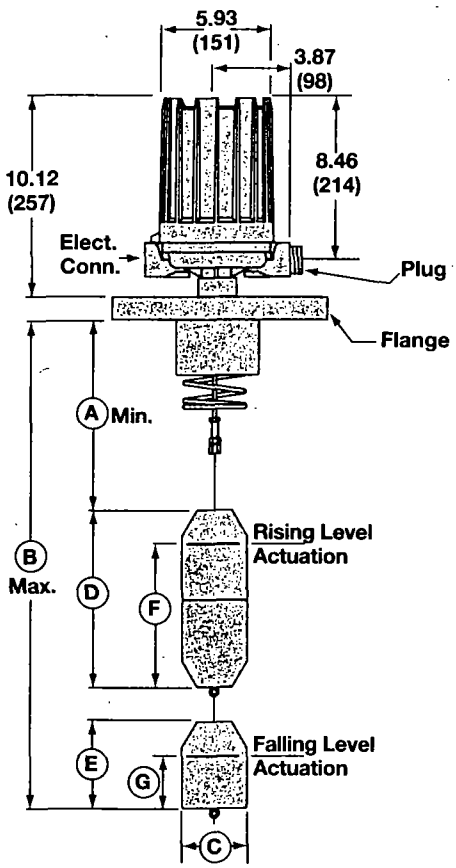

Model A10 with Flanged Mounting

MODEL A15 DIMENSIONAL DATA AND ACTUATING LEVELS

DIMENSIONAL DATA cont. INCHES (MM)

Model A15

Outline Dimensions				
Displacer Type	Threaded Mounting		Flanged Mounting	
	A	B	A	B
Porcelain	5.62 (142)	122.00 (3098)	7.62 (193)	124.00 (3149)
Stainless Steel or Karbate	5.62 (142)	122.00 (3098)	7.62 (193)	124.00 (3149)

Displacer Type	C	D
Porcelain	2.56 (65)	7.25 (184)
Stainless Steel or Karbate	2.50 (63)	9.00 (228)

Electrical Connections
1/2" NPT
3/4" NPT
1" NPT
M20

A15 Standard actuating levels and liquid specific gravity

Displacer Type	Liquid Temp. °F	0.50		0.60		0.70		0.80		0.90		1.00	
		E	F	E	F	E	F	E	F	E	F	E	F
Porcelain	100	—	—	5.10 (129)	2.10 (53)	4.50 (114)	1.70 (43)	3.90 (99)	1.70 (43)	3.50 (88)	1.50 (38)	3.20 (81)	1.40 (35)
	200	—	—	5.60 (142)	2.60 (66)	4.90 (124)	2.10 (53)	4.30 (109)	2.10 (53)	3.80 (96)	1.80 (45)	3.50 (88)	1.70 (43)
	300	—	—	—	—	5.20 (132)	2.40 (60)	4.50 (114)	2.30 (58)	4.10 (104)	2.10 (53)	3.70 (93)	1.90 (48)
	400	—	—	—	—	5.60 (142)	2.80 (71)	4.80 (121)	2.60 (66)	4.30 (109)	2.30 (58)	3.90 (99)	2.10 (53)
	500	—	—	—	—	—	—	5.10 (129)	2.90 (73)	4.60 (116)	2.60 (66)	4.20 (106)	2.40 (60)
Stainless Steel or Karbate	100	5.40 (137)	2.00 (50)	4.50 (114)	1.60 (40)	3.90 (99)	1.40 (35)	3.40 (86)	1.20 (30)	3.00 (76)	1.10 (27)	2.70 (68)	1.00 (25)
	200	6.00 (152)	2.60 (66)	5.00 (127)	2.10 (53)	4.30 (109)	1.80 (45)	3.70 (93)	1.60 (40)	3.30 (83)	1.40 (35)	3.00 (76)	1.30 (33)
	300	6.40 (162)	3.00 (76)	5.30 (134)	2.40 (60)	4.60 (116)	2.10 (53)	4.00 (101)	1.80 (45)	3.60 (91)	1.70 (43)	3.20 (81)	1.50 (38)
Stainless Steel	400	6.90 (175)	3.50 (88)	5.70 (144)	2.80 (71)	4.90 (124)	2.40 (60)	4.30 (109)	2.10 (53)	3.80 (96)	1.90 (48)	3.40 (86)	1.70 (43)
	500	—	—	6.10 (154)	3.20 (81)	5.20 (132)	2.80 (71)	4.60 (116)	2.40 (60)	4.10 (104)	2.20 (55)	3.70 (93)	2.00 (50)

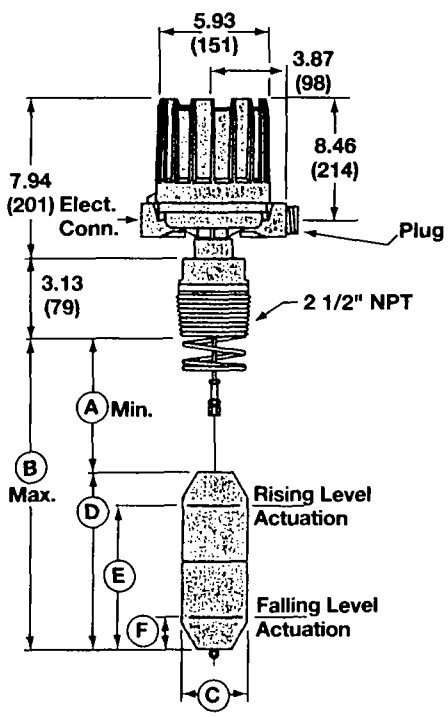

Model A15
with Threaded Mounting

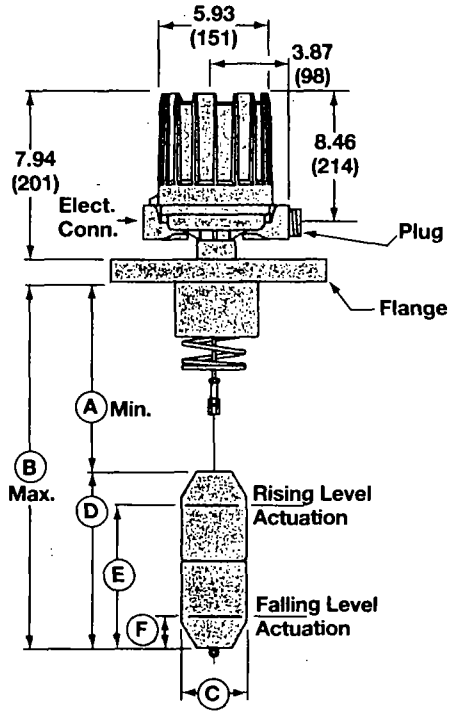

Model A15
with Flanged Mounting

MODEL B10 DIMENSIONAL DATA

DIMENSIONAL DATA cont. INCHES (MM)

Model B10

Outline Dimensions				
Displacer Type	Threaded Mounting		Flanged Mounting	
	A	B	A	B
Porcelain	4.88 (123)	122.00 (3098)	6.88 (174)	124.00 (3149)
Stainless Steel or Karbate	4.75 (120)	122.00 (3098)	6.75 (171)	124.00 (3149)

Model B10 with displacer arrangements 1 and 2

Displacer Type	C	D	E
Porcelain	2.56 (65)	10.04 (255)	5.02 (127)
Stainless Steel or Karbate	2.50 (63)	12.00 (304)	6.00 (152)

Model B10 with displacer arrangements 3, 4, and 5

Displacer Type	C	D	E	F
Porcelain	2.56 (65)	5.02 (127)	5.02 (127)	5.02 (127)
Stainless Steel or Karbate	2.50 (63)	6.00 (152)	6.00 (152)	6.00 (152)

Electrical Connections
1/2" NPT
3/4" NPT
1" NPT
M20

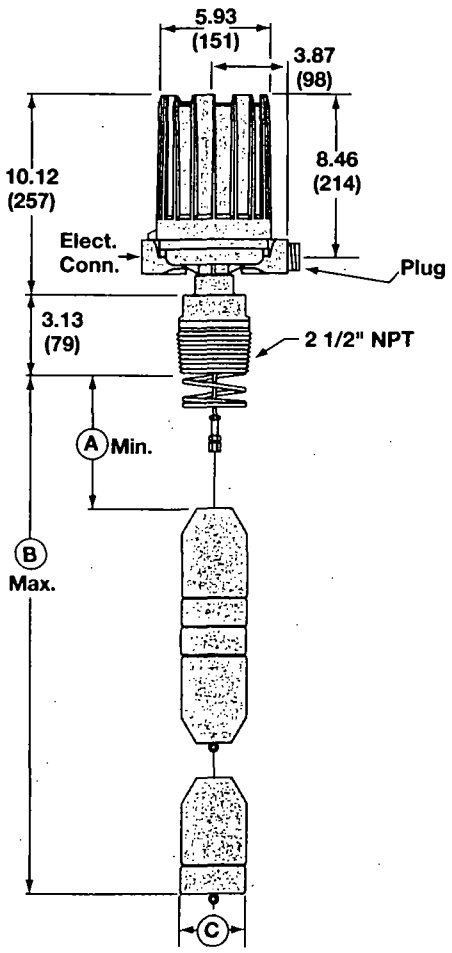

Model B10
with Threaded Mounting

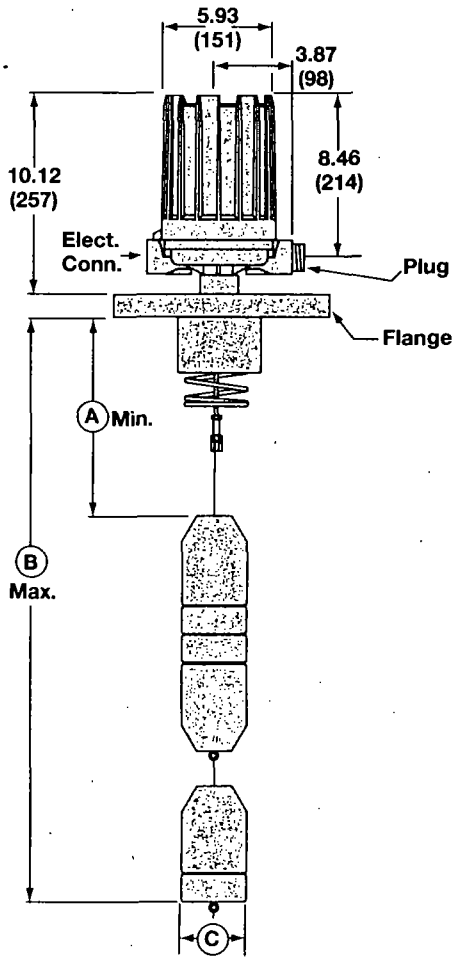

Model B10
with Flanged Mounting

MODEL B10 ACTUATING LEVELS

DIMENSIONAL DATA cont. INCHES (MM)

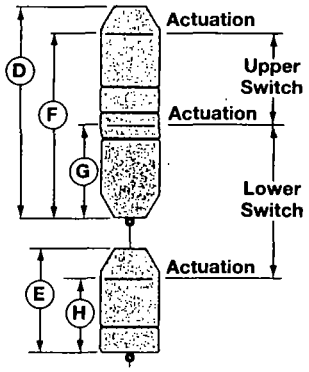

Model B10
Displacer Arrangement 1

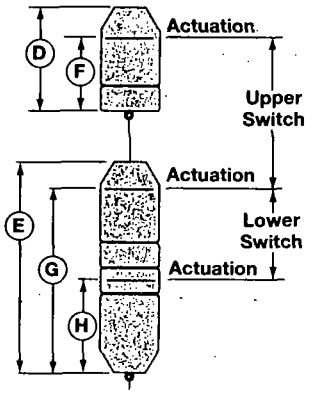

Model B10
Displacer Arrangement 2

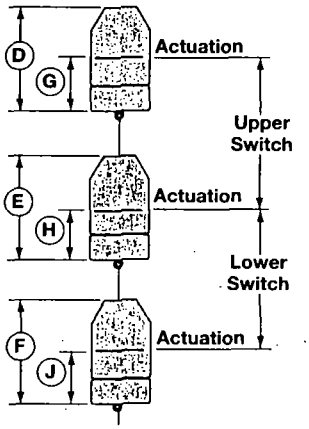

Model B10
Displacer Arrangement 3

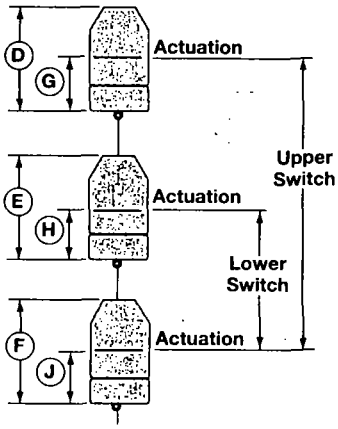

Model B10
Displacer Arrangement 4

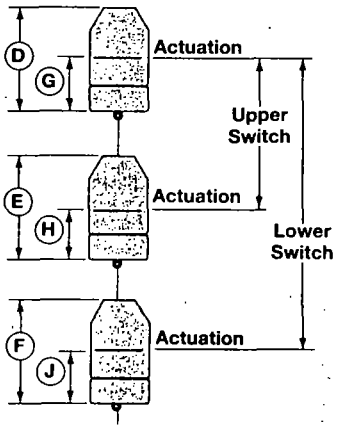

Model B10
Displacer Arrangement 5

B10 Standard actuating levels and liquid specific gravity with displacer arrangement 1

Displacer Type	Liquid Temp. ° F	Level	0.60 - 0.64	0.65 -0.71	0.72 - 0.73	0.74 - 0.82	0.83 - 0.92	0.93 - 1.00	1.01 - 1.07
Porcelain	100	F	7.79 - 7.04 (197 - 178)	7.66 - 6.65 (194 - 168)	7.22 - 7.06 (133 - 179)	6.91 - 5.81 (175 - 147)	6.73 - 5.65 (180 - 143)	5.55 - 4.86 (140 - 123)	4.97 - 4.53 (126 - 115)
		G	2.62 - 2.19 (56 - 55)	2.88 - 2.28 (73 - 57)	2.91 - 2.81 (73 - 71)	2.71 - 2.03 (68 - 51)	2.99 - 2.28 (75 - 57)	2.21 - 1.76 (56 - 44)	1.90 - 1.63 (48 - 41)
		H	2.01 - 1.89 (51 - 48)	1.86 - 1.70 (47 - 43)	1.68 - 1.65 (42 - 41)	1.63 - 1.47 (41 - 37)	1.45 - 1.31 (36 - 33)	1.30 - 1.21 (33 - 30)	1.02 - 0.97 (25 - 24)
	200	F	7.91 (200)	7.72 - 6.71 (196 - 170)	6.56 - 6.41 (166 - 162)	6.73 - 5.66 (170 - 143)	6.37 - 5.33 (161 - 135)	6.15 - 5.42 (156 - 137)	5.02 - 4.57 (127 - 116)
		G	3.06 (77)	2.95 - 2.34 (74 - 59)	2.25 - 2.16 (57 - 54)	2.54 - 1.87 (64 - 47)	2.63 - 1.95 (66 - 49)	2.81 - 2.32 (71 - 58)	1.94 - 1.67 (49 - 42)
		H	2.76 (70)	2.72 - 2.49 (69 - 63)	2.45 - 2.42 (62 - 61)	2.39 - 2.15 (60 - 54)	2.13 - 1.92 (54 - 48)	1.90 - 1.77 (48 - 44)	1.58 - 1.49 (40 - 37)
	300	F	—	—	—	7.48 - 6.34 (189 - 161)	7.04 - 5.93 (178 - 150)	6.75 - 5.98 (171 - 151)	5.57 - 5.10 (141 - 129)
		G	—	—	—	3.29 - 2.55 (83 - 64)	3.30 - 2.56 (83 - 65)	3.41 - 2.87 (86 - 72)	2.50 - 2.19 (63 - 55)
		H	—	—	—	3.14 - 2.83 (79 - 71)	2.80 - 2.53 (71 - 64)	2.50 - 2.32 (63 - 58)	2.13 - 2.01 (54 - 51)
	400	F	—	—	—	—	—	—	6.12 - 5.62 (155 - 142)
		G	—	—	—	—	—	—	3.05 - 2.72 (77 - 69)
		H	—	—	—	—	—	—	2.68 - 2.53 (68 - 64)

MODEL B10 ACTUATING LEVELS cont.

B10 Standard actuating levels and liquid specific gravity with displacer arrangement 1

Displacer Type	Liquid Temp. ° F	Level	1.08 - 1.12	1.13 - 1.17	1.18 - 1.27	1.28 - 1.30	1.31 - 1.39	1.40 - 1.50
Porcelain	100	F	4.47 - 4.20 (113 - 106)	4.90 - 4.64 (124 - 117)	4.57 - 4.05 (116 - 102)	3.99 - 3.89 (101 - 98)	4.23 - 3.82 (107 - 97)	3.77 - 3.33 (95 - 84)
		G	1.59 - 1.43 (40 - 36)	2.16 - 1.99 (54 - 50)	1.94 - 1.60 (49 - 40)	1.57 - 1.50 (39 - 38)	1.86 - 1.59 (47 - 40)	1.56 - 1.26 (39 - 32)
		H	0.96 - 0.92 (24 - 23)	0.92 - 0.88 (23 - 22)	0.88 - 0.81 (22 - 20)	0.81 - 0.80 (20 - 20)	0.79 - 0.74 (20 - 18)	0.74 - 0.69 (18 - 17)
	200	F	4.66 - 4.39 (118 - 111)	4.33 - 4.08 (109 - 103)	4.32 - 3.81 (109 - 96)	4.29 - 4.18 (108 - 106)	4.13 - 3.73 (104 - 94)	3.93 - 3.47 (99 - 88)
		G	1.79 - 1.62 (45 - 41)	1.58 - 1.43 (40 - 36)	1.69 - 1.36 (42 - 34)	1.87 - 1.80 (47 - 45)	1.76 - 1.49 (44 - 37)	1.71 - 1.40 (43 - 35)
		H	1.48 - 1.42 (37 - 36)	1.41 - 1.36 (35 - 34)	1.35 - 1.25 (34 - 31)	1.24 - 1.23 (31 - 31)	1.22 - 1.15 (30 - 29)	1.14 - 1.06 (28 - 26)
	300	F	5.18 - 4.89 (131 - 124)	4.82 - 4.56 (122 - 115)	4.79 - 4.25 (121 - 107)	4.73 - 4.61 (120 - 117)	4.56 - 4.13 (115 - 104)	4.32 - 3.84 (109 - 97)
		G	2.31 - 2.12 (58 - 53)	2.08 - 1.91 (52 - 48)	2.16 - 1.80 (54 - 45)	2.31 - 2.23 (58 - 56)	2.19 - 1.90 (55 - 48)	2.11 - 1.78 (53 - 45)
		H	1.99 - 1.92 (50 - 48)	1.90 - 1.84 (48 - 46)	1.82 - 1.69 (45 - 42)	1.68 - 1.66 (42 - 42)	1.64 - 1.55 (41 - 39)	1.54 - 1.43 (39 - 36)
	400	F	5.70 - 5.39 (144 - 136)	5.32 - 5.04 (135 - 128)	5.26 - 4.69 (133 - 119)	5.17 - 5.04 (131 - 128)	4.98 - 4.53 (126 - 115)	4.72 - 4.22 (119 - 107)
		G	2.82 - 2.62 (71 - 66)	2.57 - 2.39 (65 - 60)	2.63 - 2.24 (66 - 56)	2.74 - 2.66 (69 - 67)	2.61 - 2.30 (66 - 58)	2.51 - 2.15 (63 - 54)
		H	2.51 - 2.42 (63 - 61)	2.40 - 2.32 (60 - 58)	2.30 - 2.13 (58 - 54)	2.12 - 2.08 (53 - 52)	2.07 - 1.95 (52 - 49)	1.94 - 1.81 (49 - 45)
	500	F	6.22 - 5.89 (157 - 149)	5.81 - 5.52 (147 - 140)	5.74 - 5.13 (145 - 130)	5.60 - 5.47 (142 - 138)	5.41 - 4.93 (137 - 125)	5.12 - 4.59 (130 - 116)
		G	3.34 - 3.12 (84 - 79)	3.07 - 2.86 (77 - 72)	3.11 - 2.68 (78 - 68)	3.18 - 3.09 (80 - 78)	3.04 - 2.70 (77 - 68)	2.91 - 2.52 (73 - 64)
		H	3.03 - 2.92 (76 - 74)	2.89 - 2.79 (73 - 70)	2.77 - 2.57 (70 - 65)	2.55 - 2.51 (64 - 63)	2.50 - 2.35 (63 - 59)	2.33 - 2.18 (59 - 55)

Displacer Type	Liquid Temp. ° F	Level	0.50 - 0.58	0.59 - 0.71	0.72 - 0.79	0.80 - 0.85	0.86 - 1.00	1.01 - 1.03
Stainless Steel and Karbate	100	F	9.91 - 7.72 (251 - 196)	9.19 - 6.62 (233 - 168)	8.44 - 7.16 (214 - 181)	7.66 - 6.86 (194 - 174)	6.71 - 4.93 (170 - 125)	4.82 - 4.61 (122 - 117)
		G	3.46 - 2.16 (86 - 54)	3.72 - 2.08 (94 - 52)	3.96 - 3.07 (100 - 77)	3.63 - 3.07 ((92 - 77)	2.96 - 1.71 (75 - 43)	1.63 - 1.48 (41 - 37)
		H	2.51 - 2.16 (63 - 54)	2.13 - 1.77 (54 - 44)	1.74 - 1.59 (44 - 40)	1.57 - 1.48 (39 - 37)	1.46 - 1.25 (37 - 31)	1.24 - 1.22 (31 - 30)
	200	F	10.22 - 7.98 (259 - 202)	7.74 - 7.44 (196 - 188)	7.50 - 6.30 (190 - 160)	6.15 - 5.44 (156 - 138)	6.97 - 5.15 (177 - 130)	—
		G	3.76 - 2.42 (95 - 61)	2.27 - 1.89 (57 - 48)	3.02 - 2.22 (76 - 56)	2.12 - 1.64 (53 - 41)	3.22 - 1.93 (81 - 49)	—
		H	3.67 - 3.16 (93 - 80)	3.11 - 2.58 (78 - 65)	2.55 - 2.32 (64 - 58)	2.29 - 2.16 (58 - 54)	2.13 - 1.84 (54 - 46)	—
	300	F	—	9.68 - 7.25 (245 - 184)	8.31 - 7.04 (211 - 178)	6.88 - 6.12 (174 - 155)	7.65 - 5.73 (194 - 145)	—
		G	—	4.30 - 2.70 (109 - 68)	3.83 - 2.96 (97 - 75)	2.84 - 2.32 (72 - 58)	3.89 - 2.51 (98 - 63)	—
		H	—	4.03 - 3.40 (102 - 86)	3.36 - 3.06 (85 - 77)	3.02 - 2.84 (76 - 72)	2.81 - 2.42 (71 - 61)	—
Stainless Steel	400	F	—	—	9.11 - 7.77 (231 - 197)	7.60 - 6.80 (193 - 172)	8.32 - 6.32 (211 - 160)	—
		G	—	—	4.63 - 3.69 (117 - 93)	3.57 - 3.01 (90 - 76)	4.57 - 3.09 (116 - 78)	—
		H	—	—	4.16 - 3.79 (105 - 96)	3.75 - 3.53 (95 - 89)	3.48 - 3.00 (88 - 76)	—
	500	F	—	—	—	—	9.00 - 6.90 (228 - 175)	—
		G	—	—	—	—	5.24 - 3.67 (133 - 93)	—
		H	—	—	—	—	4.16 - 3.58 (105 - 90)	—

MODEL B10 ACTUATING LEVELS cont.

DIMENSIONAL DATA cont. INCHES (MM)

B10 Standard actuating levels and liquid specific gravity with displacer arrangement 2

Displacer Type	Liquid Temp. ° F	Level	0.60 - 0.64	0.65 -0.71	0.72 - 0.73	0.74 - 0.82	0.83 - 0.92	0.93 - 1.00	1.01 - 1.07
Porcelain	100	F	2.77 - 2.01 (70 - 51)	2.63 - 1.62 (66 - 41)	2.67 - 2.51 (67 - 63)	2.58 - 1.42 (65 - 36)	3.16 - 1.94 (80 - 49)	1.82 - 1.04 (45 - 26)	1.69 - 1.23 (42 - 31)
		G	7.27 - 6.84 (184 - 173)	7.54 - 6.93 (191 - 176)	7.56 - 7.46 (192 - 189)	7.36 - 6.68 (186 - 169)	7.64 - 6.93 (194 - 176)	6.86 - 6.41 (174 - 162)	5.15 - 4.89 (130 - 124)
		H	2.67 - 2.53 (67 - 64)	3.29 - 3.05 (83 - 77)	3.73 - 3.68 (94 - 93)	3.64 - 3.32 (92 - 84)	4.32 - 3.93 (109 - 99)	3.90 - 3.65 (99 - 92)	2.42 - 2.31 (61 - 58)
	200	F	3.15 (80)	2.96 - 1.93 (75 - 49)	1.77 - 1.62 (44 - 41)	2.64 - 1.47 (67 - 37)	2.79 - 1.61 (70 - 40)	2.79 - 1.94 (70 - 49)	1.56 - 1.11 (39 - 28)
		G	7.71 (195)	7.60 - 6.99 (193 - 177)	6.90 - 6.81 (175 - 172)	7.19 - 6.52 (182 - 165)	7.28 - 6.60 (184 - 167)	7.46 - 6.97 (189 - 177)	5.19 - 4.92 (131 - 124)
		H	3.40 (86)	3.36 - 3.10 (85 - 78)	3.07 - 3.03 (77 - 76)	3.46 - 3.16 (87 - 80)	3.96 - 3.61 (100 - 91)	4.50 - 4.21 (114 - 106)	2.46 - 2.35 (62 - 59)
	300	F	—	—	—	3.39 - 2.15 (86 - 54)	3.47 - 2.22 (88 - 56)	3.39 - 2.50 (86 - 63)	2.11 - 1.63 (53 - 41)
		G	—	—	—	7.94 - 7.20 (201 - 182)	7.95 - 7.21 (201 - 183)	8.06 - 7.53 (204 - 191)	5.75 - 5.45 (146 - 138)
		H	—	—	—	4.21 - 3.84 (106 - 97)	4.63 - 4.21 (117 - 106)	5.10 - 4.77 (129 - 121)	3.02 - 2.87 (76 - 72)
	400	F	—	—	—	—	—	—	2.67 - 2.15 (67 - 54)
		G	—	—	—	—	—	—	6.30 - 5.97 (160 - 151)
		H	—	—	—	—	—	—	3.57 - 3.39 (90 - 86)

Displacer Type	Liquid Temp. ° F	Level	1.08 - 1.12	1.13 - 1.17	1.18 - 1.27	1.28 - 1.30	1.31 - 1.39	1.40 - 1.50
Porcelain	100	F	1.16 - 0.89 (29 - 22)	2.04 - 1.75 (51 - 44)	1.68 - 1.10 (42 - 27)	1.04 - 0.92 (26 - 23)	2.05 - 1.56 (52 - 39)	1.50 - 0.97 (38 - 24)
		G	4.84 - 4.68 (122 - 118)	5.41 - 5.24 (137 - 133)	5.20 - 4.85 (132 - 123)	4.82 - 4.75 (122 - 120)	5.11 - 4.84 (129 - 122)	4.81 - 4.51 (122 - 114)
		H	2.29 - 2.22 (58 - 56)	2.97 - 2.88 (75 - 73)	2.86 - 2.68 (72 - 68)	2.66 - 2.63 (67 - 66)	3.01 - 2.85 (76 - 72)	2.84 - 2.67 (72 - 67)
	200	F	1.68 - 1.38 (42 - 35)	1.31 - 1.05 (33 - 26)	1.71 - 1.13 (43 - 28)	1.75 - 1.62 (44 - 41)	1.56 - 1.09 (39 - 27)	1.53 - 1.00 (38 - 25)
		G	5.04 - 4.88 (128 - 123)	4.84 - 4.68 (122 - 118)	4.94 - 4.62 (125 - 117)	5.12 - 5.05 (130 - 128)	5.01 - 4.75 (127 - 120)	4.96 - 4.65 (125 - 118)
		H	2.49 - 2.41 (63 - 61)	2.39 - 2.33 (60 - 59)	2.60 - 2.44 (66 - 61)	2.97 - 2.93 (73 - 70)	2.91 - 2.76 (73 - 70)	2.99 - 2.82 (75 - 77)
	300	F	2.19 - 1.88 (55 - 47)	1.81 - 1.52 (45 - 38)	2.19 - 1.57 (55 - 39)	2.18 - 2.05 (50 - 37)	1.98 - 1.49 (50 - 37)	1.93 - 1.37 (49 - 34)
		G	5.56 - 5.37 (141 - 136)	5.33 - 5.16 (135 - 131)	5.41 - 5.06 (137 - 128)	5.56 - 5.48 (138 - 130)	5.44 - 5.15 (138 - 130)	5.36 - 5.03 (136 - 127)
		H	3.01 - 2.91 (76 - 73)	2.89 - 2.80 (73 - 71)	3.07 - 2.88 (77 - 73)	3.40 - 3.36 (84 - 80)	3.33 - 3.16 (84 - 80)	3.39 - 3.19 (86 - 81)
	400	F	2.71 - 2.38 (68 - 60)	2.30 - 2.00 (58 - 50)	2.66 - 2.01 (67 - 51)	2.62 - 2.48 (61 - 48)	2.41 - 1.90 (61 - 48)	2.33 - 1.74 (59 - 44)
		G	6.08 - 5.87 (154 - 149)	5.82 - 5.64 (147 - 143)	5.89 - 5.49 (149 - 139)	5.99 - 5.91 (152 - 150)	5.87 - 5.55 (149 - 140)	5.76 - 5.40 (146 - 137)
		H	3.52 - 3.41 (89 - 86)	3.38 - 3.28 (85 - 83)	3.55 - 3.32 (90 - 84)	3.84 - 3.79 (97 - 96)	3.76 - 3.56 (95 - 90)	3.79 - 3.56 (96 - 90)
	500	F	3.23 - 2.88 (82 - 73)	2.80 - 2.48 (71 - 62)	3.13 - 2.45 (79 - 62)	3.05 - 2.91 (77 - 73)	2.84 - 2.30 (72 - 58)	2.73 - 2.11 (69 - 53)
		G	6.59 - 6.37 (167 - 161)	6.32 - 6.12 (160 - 155)	6.36 - 5.93 (161 - 150)	6.43 - 6.34 (163 - 161)	6.29 - 5.95 (159 - 151)	6.16 - 5.77 (156 - 146)
		H	4.04 - 3.91 (102 - 99)	3.88 - 3.76 (98 - 95)	4.02 - 3.76 (102 - 95)	4.28 - 4.21 (108 - 106)	4.19 - 3.97 (106 - 100)	4.19 - 3.93 (106 - 99)

MODEL B10 ACTUATING LEVELS cont.

B10 Standard actuating levels and liquid specific gravity with displacer arrangement 2

Displacer Type	Liquid Temp. ° F	Level	0.50 - 0.58	0.59 - 0.71	0.72 - 0.79	0.80 - 0.85	0.86 - 1.00	1.01 - 1.03
Stainless Steel and Karbate	100	F	3.77 - 1.60 (95 - 40)	4.10 - 1.38 (104 - 35)	4.43 - 2.97 (112 - 75)	4.58 - 3.60 (24 - 91)	3.42 - 1.26 (86 - 31)	1.13 - 0.88 (28 - 22)
		G	9.46 - 8.16 (240 - 207)	9.72 - 8.08 (246 - 205)	9.96 - 9.07 (252 230)	9.63 - 9.07 (244 - 230)	8.96 - 7.71 (227 - 195)	7.63 - 7.48 (193 - 189)
		H	3.73 - 3.21 (94 - 81)	4.86 - 4.04 (123 - 102)	5.97 - 5.44 (151 - 138)	6.05 - 5.69 (153 - 144)	5.63 - 4.84 (143 - 122)	4.79 - 4.70 (121 - 119)
	200	F	4.22 - 1.98 (107 - 50)	1.74 - 1.44 (44 - 36)	3.74 - 2.35 (94 - 59)	2.17 - 1.33 (55 - 33)	3.89 - 1.66 (98 - 42)	—
		G	9.76 - 8.42 (247 - 213)	8.27 - 6.88 (210 - 174)	9.02 - 8.22 (229 - 208)	8.12 - 7.64 (206 - 194)	9.22 - 7.93 (234 - 201)	—
		H	4.03 - 3.47 (102 - 88)	3.41 - 2.84 (86 - 62)	5.04 - 4.59 (128 - 116)	4.53 - 4.27 (115 - 108)	5.88 - 5.06 (149 - 128)	—
	300	F	—	4.87 - 2.26 (123 - 57)	4.55 - 3.08 (115 - 78)	2.89 - 2.02 (73 - 51)	4.56 - 2.24 (115 - 56)	—
		G	—	10.30 - 8.70 (261 - 220)	9.83 - 8.96 (249 - 227)	8.84 - 8.32 (224 - 211)	9.89 - 8.51 (251 - 216)	—
		H	—	5.52 - 4.66 (140 - 118)	5.84 - 5.33 (148 - 135)	5.26 - 4.95 (133 - 125)	6.56 - 5.64 (166 - 131)	—
Stainless Steel	400	F	—	—	5.35 - 3.82 (135 - 97)	3.62 - 2.70 (91 - 68)	5.24 - 2.82 (133 - 71)	—
		G	—	—	10.63 - 9.69 (270 - 246)	9.57 - 9.01 (243 - 228)	10.57 - 9.09 (183 - 157)	—
		H	—	—	6.65 - 6.06 (168 - 153)	5.99 - 5.63 (152 - 143)	7.24 - 6.22 (183 - 157)	—
	500	F	—	—	—	—	5.91 - 3.41 (150 - 86)	—
		G	—	—	—	—	11.24 - 9.67 (285 - 245)	—
		H	—	—	—	—	7.91 - 6.80 (200 - 172)	—

MODEL B10 ACTUATING LEVELS cont.

B10 Standard actuating levels and liquid specific gravity with displacer arrangements 3, 4, and 5

Displacer Type	Liquid Temp. ° F	Level	0.60 - 0.64	0.65 -0.71	0.72 - 0.73	0.74 - 0.82	0.83 - 0.92	0.93 - 1.00	1.01 - 1.07
Porcelain	100	G	2.77 - 2.01 (70 - 51)	2.63 - 1.62 (66 - 41)	2.67 - 2.51 (67 - 63)	2.58 - 1.42 (65 - 36)	3.16 - 1.94 (80 - 49)	1.82 - 1.04 (45 - 26)	1.69 - 1.23 (42 - 31)
		H	2.24 - 1.81 (56 - 45)	2.51 - 1.90 (63 - 48)	2.53 - 2.43 (64 - 61)	2.34 - 1.66 (59 - 42)	2.62 - 1.91 (66 - 48)	1.84 - 1.38 (46 - 35)	1.53 - 1.26 (38 - 32)
		J	2.01 - 1.89 (51 - 48)	1.86 - 1.70 (47 - 43)	1.68 - 1.65 (42 - 41)	1.63 - 1.47 (41 - 37)	1.45 - 1.31 (36 - 33)	1.30 - 1.21 (33 - 30)	1.02 - .097 (25 - 24)
	200	G	3.15 (80)	2.96 - 1.93 (75 - 49)	1.77 - 1.62 (44 - 41)	2.64 - 1.47 (67 - 37)	2.79 - 1.61 (70 - 40)	2.79 - 1.94 (70 - 49)	1.56 - 1.11 (39 - 28)
		H	2.69 (68)	2.57 - 1.96 965 - 49)	1.87 - 1.78 (47 - 45)	2.16 - 1.50 (54 - 38)	2.25 - 1.58 (57 - 40)	2.44 - 1.94 (61 - 49)	1.40 - 1.14 (35 - 28)
		J	2.76 (70)	2.72 - 2.49 (69 - 63)	2.45 - 2.42 (62 - 61)	2.39 - 2.15 (60 - 54)	2.13 - 1.92 (54 - 48)	1.90 - 1.77 (48 - 44)	1.58 - 1.49 (40 - 37)
	300	G	—	—	—	3.39 - 2.15 (86 - 54)	3.47 - 2.22 (88 - 56)	3.39 - 2.50 (86 - 63)	2.11 - 1.63 (53 - 41)
		H	—	—	—	2.92 - 2.18 (74 - 55)	2.93 - 2.18 (74 - 55)	3.04 - 2.50 (77 - 63)	1.95 - 1.66 (49 - 42)
		J	—	—	—	3.14 - 2.83 (79 - 71)	2.80 - 2.53 (71 - 64)	2.50 - 2.32 (63 - 58)	2.13 - 2.01 (54 - 51)
	400	G	—	—	—	—	—	—	2.67 - 2.15 (67 - 54)
		H	—	—	—	—	—	—	2.68 - 2.34 (68 - 59)
		J	—	—	—	—	—	—	2.68 - 2.53 (68 - 64)

Displacer Type	Liquid Temp. ° F	Level	1.08 - 1.12	1.13 - 1.17	1.18 - 1.27	1.28 - 1.30	1.31 - 1.39	1.40 - 1.50
Porcelain	100	G	1.16 - 0.89 (29 - 22)	2.04 - 1.75 (51 - 44)	1.68 - 1.10 (42 - 27)	1.04 - 0.92 (26 - 23)	2.05 - 1.56 (52 - 39)	1.50 - 0.97 (38 - 24)
		H	1.22 - 1.06 (30 - 26)	1.78 - 1.61 (45 - 40)	1.57 - 1.23 (39 - 31)	1.19 - 1.12 (30 - 28)	1.49 - 1.21 (37 - 30)	1.18 - 0.89 (29 - 22)
		J	0.96 - 0.92 (24 - 23)	0.92 - 0.88 (23 - 22)	0.88 - 0.81 (22 - 20)	0.81 - 0.80 (20 - 20)	0.79 - 0.74 (20 - 18)	0.74 - 0.69 (18 - 17)
	200	G	1.68 - 1.38 (42 - 35)	1.31 - 1.05 (33 - 26)	1.71 - 1.13 (43 - 28)	1.75 - 1.62 (44 - 41)	1.56 - 1.09 (39 - 27)	1.53 - 1.00 (38 - 25)
		H	1.42 - 1.25 (36 - 31)	1.21 - 1.06 (30 - 26)	1.31 - 0.99 (33 - 25)	1.50 - 1.42 (38 - 36)	1.39 - 1.12 (35 - 28)	1.33 - 1.03 (33 - 26)
		J	1.48 - 1.42 (37 - 36)	1.41 - 1.36 (35 - 34)	1.35 - 1.25 (34 - 31)	1.24 - 1.23 (31 - 31)	1.22 - 1.15 (30 - 29)	1.14 - 1.06 (28 - 26)
	300	G	2.19 - 1.88 (55 - 47)	1.81 - 1.52 (45 - 38)	2.19 - 1.57 (55 - 39)	2.18 - 2.05 (50 - 37)	1.98 - 1.49 (50 - 37)	1.93 - 1.37 (49 - 34)
		H	1.93 - 1.75 (49 - 44)	1.70 - 1.53 (43 - 38)	1.79 - 1.43 (45 - 36)	1.93 - 1.85 (49 - 46)	1.81 - 1.52 (45 - 38)	1.73 - 1.40 (43 - 35)
		J	1.99 - 1.92 (50 - 48)	1.90 - 1.84 (48 - 46)	1.82 - 1.69 (45 - 42)	1.68 - 1.66 (42 - 42)	1.64 - 1.55 (41 - 39)	1.54 - 1.43 (39 - 36)
	400	G	2.71 - 2.38 (68 - 60)	2.30 - 2.00 (58 - 50)	2.66 - 2.01 (67 - 51)	2.62 - 2.48 (61 - 48)	2.41 - 1.90 (61 - 48)	2.33 - 1.74 (59 - 44)
		H	2.45 - 2.25 (62 - 57)	2.20 - 2.01 (55 - 51)	2.26 - 1.87 (57 - 47)	2.37 - 2.28 (60 - 57)	2.24 - 1.92 (56 - 23)	2.13 - 1.77 (54 - 44)
		J	2.51 - 2.42 (63 - 61)	2.40 - 2.32 (60 - 58)	2.30 - 2.13 (58 - 54)	2.12 - 2.08 (53 - 52)	2.07 - 1.95 (52 - 49)	1.94 - 1.81 (49 - 45)
	500	G	3.23 - 2.88 (82 - 73)	2.80 - 2.48 (71 - 62)	3.13 - 2.45 (79 - 62)	3.05 - 2.91 (77 - 73)	2.84 - 2.30 (72 - 58)	2.73 - 2.11 (69 - 53)
		H	2.97 - 2.75 (75 - 69)	2.69 - 2.49 (68 - 63)	2.73 - 2.31 (69 - 58)	2.80 - 2.71 (71 - 68)	2.67 - 2.33 (67 - 59)	2.53 - 2.15 (64 - 54)
		J	3.03 - 2.92 (76 - 74)	2.89 - 2.79 (73 - 70)	2.77 - 2.57 (70 - 65)	2.55 - 2.51 (64 - 63)	2.50 - 2.35 (63 - 59)	2.33 - 2.18 (59 - 55)

MODEL B10 ACTUATING LEVELS cont.

B10 Standard actuating levels and liquid specific gravity with displacer arrangements 3, 4, and 5

Displacer Type	Liquid Temp. ° F	Level	0.50 - 0.58	0.59 - 0.71	0.72 - 0.79	0.80 - 0.85	0.86 - 1.00	1.01 - 1.03
Stainless Steel and Karbate	100	G	3.77 - 1.60 (95 - 40)	4.10 - 1.38 (104 - 35)	4.43 - 2.97 (112 - 75)	4.58 - 3.60 (24 - 91)	3.42 - 1.26 (86 - 31)	1.13 - 0.88 (28 - 22)
		H	3.46 - 2.16 (87 - 54)	3.72 - 2.08 (94 - 52)	3.96 - 3.07 (100 - 77)	3.63 - 3.07 (92 - 77)	2.96 - 1.71 ((75 - 43)	1.45 - 1.31 (36 - 33)
		J	2.51 - 2.16 (63 - 54)	2.13 - 1.77 (54 - 44)	1.74 - 1.59 (44 - 40)	1.57 - 1.48 (39 - 37)	1.46 - 1.25 (37 - 31)	1.24 - 1.22 (31 - 30)
	200	G	4.22 - 1.98 (107 - 50)	1.74 - 1.44 (44 - 36)	3.74 - 2.35 (94 - 59)	2.17 - 1.33 (55 - 33)	3.89 - 1.66 (98 - 42)	—
		H	3.76 - 2.42 (95 - 61)	2.27 - 1.89 (57 - 48)	3.02 - 2.22 (76 - 56)	2.12 - 1.64 (53 - 41)	3.22 - 1.93 (81 - 49)	—
		J	3.67 - 3.16 (93 - 80)	3.11 - 2.58 (78 - 65)	2.55 - 2.32 (64 - 58)	2.29 - 2.16 (58 - 54)	2.13 - 1.84 (54 - 46)	—
	300	G	—	4.87 - 2.26 (123 - 57)	4.55 - 3.08 (115 - 78)	2.89 - 2.02 (73 - 51)	4.56 - 2.24 (115 - 56)	—
		H	—	4.30 - 2.70 (109 - 68)	3.83 - 2.96 (97 - 75)	2.84 - 2.32 (72 - 58)	3.89 - 2.51 (98 - 63)	—
		J	—	4.03 - 3.40 (102 - 86)	3.36 - 3.06 (85 - 77)	3.02 - 2.84 (76 - 72)	2.81 - 2.42 (71 - 61)	—
Stainless Steel	400	G	—	—	5.35 - 3.82 (135 - 97)	3.62 - 2.70 (91 - 68)	5.24 - 2.82 (133 - 71)	—
		H	—	—	4.63 - 3.69 (117 - 93)	3.57 - 3.01 (90 - 76)	4.57 - 3.09 (116 - 78)	—
		J	—	—	4.16 - 3.79 (105 - 96)	3.75 - 3.53 (95 - 89)	3.48 - 3.00 (88 - 76)	—
	500	G	—	—	—	—	5.91 - 3.41 (150 - 86)	—
		H	—	—	—	—	5.24 - 3.67 (133 - 93)	—
		J	—	—	—	—	4.16 - 3.58 (105 - 90)	—

MODEL B15 DIMENSIONAL DATA

DIMENSIONAL DATA cont. INCHES (MM)

Model B15

Outline Dimensions				
Displacer Type	Threaded Mounting		Flanged Mounting	
	A	B	A	B
Porcelain	5.50 (139)	123.00 (3124)	7.50 (190)	125.00 (3175)
Stainless Steel or Karbate	5.88 (149)	123.00 (3124)	7.88 (200)	125.00 (3175)

Displacer Type	C	D	E
Porcelain	2.56 (65)	7.25 (184)	5.02 (127)
Stainless Steel or Karbate	2.50 (63)	10.50 (266)	6.00 (152)

Electrical Connections
1/2" NPT
3/4" NPT
1" NPT
M20

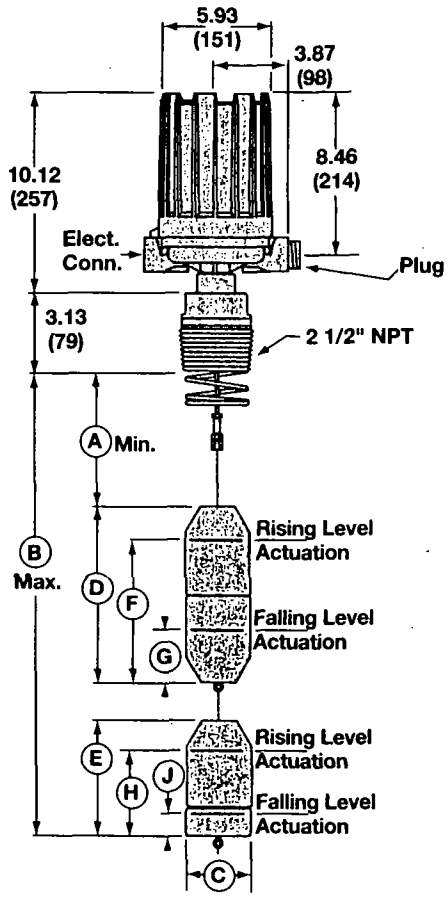

Model B15
with Threaded Mounting

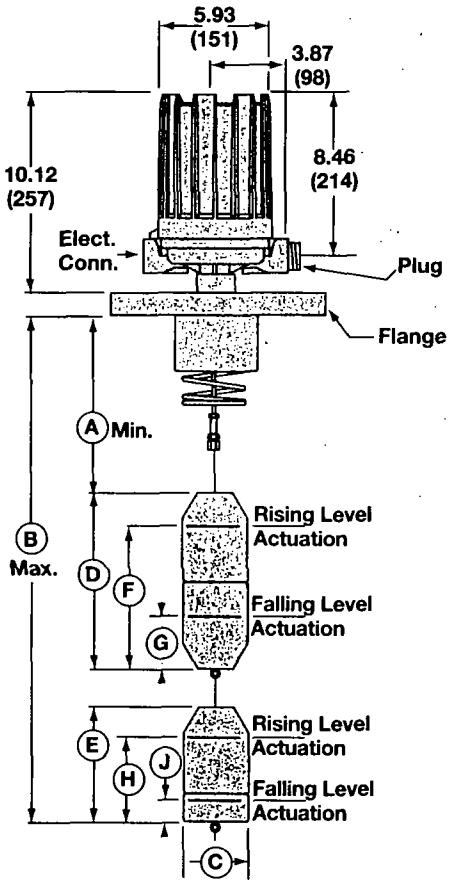

Model B15
with Flanged Mounting

MODEL B15 ACTUATING LEVELS

B15 Standard actuating levels and liquid specific gravity — inches

Displacer Type	Liquid Temp. °F	0.70				0.80			
		F	G	H	J	F	G	H	J
Stainless Steel or Karbate	100	9.50 (241)	5.00 (127)	4.90 (124)	1.30 (33)	7.60 (193)	3.70 (93)	4.30 (109)	1.10 (27))
	200	—	—	—	—	8.20 (208)	4.30 (109)	5.00 (127)	1.80 (45)

Displacer Type	Liquid Temp. °F	0.95				1.00			
		F	G	H	J	F	G	H	J
Porcelain	100	5.50 (139)	2.00 (50)	3.70 (93)	1.00 (25)	5.00 (127)	1.70 (43)	3.50 (88)	0.80 (20)
Stainless Steel	100	5.50 (139)	2.00 (50)	3.70 (93)	1.00 (25)	4.90 (124)	1.70 (43)	3.40 (86)	0.90 (22)
	200	6.00 (152)	2.70 (68)	4.20 (106)	1.50 (38)	5.40 (137)	2.20 (55)	4.00 (101)	1.50 (38)
	300	6.40 (162)	3.10 (78)	4.70 (119)	2.00 (50)	5.70 (144)	2.50 (63)	4.40 (111)	1.90 (48)
	400	—	—	—	—	6.10 (154)	2.90 (73)	4.90 (124)	2.40 (60)
Karbate	100	5.50 (139)	2.00 (50)	3.70 (93)	1.00 (25)	4.90 (124)	1.70 (43)	3.40 (86)	0.90 (22)
	200	6.00 (152)	2.70 (68)	4.20 (106)	1.50 (38)	5.40 (137)	2.20 (55)	4.00 (101)	1.50 (38)
	300	6.40 (162)	3.10 (78)	4.70 (119)	2.00 (50)	5.70 (144)	2.50 (63)	4.40 (111)	1.90 (48)

MODEL C10 DIMENSIONAL DATA

DIMENSIONAL DATA cont. INCHES (MM)

Model C10 with all displacer arrangements

Displacer Type	Outline Dimensions			
	Threaded Mounting		Flanged Mounting	
	A	B	A	B
Porcelain	6.38 (965)	123.00 (3124)	8.38 (212)	125.00 (3175)
Stainless Steel or Karbate	5.75 (146)	123.00 (3124)	7.75 (196)	125.00 (3175)

Model C10 with displacer arrangements A, B, and C

Displacer Type	C	D	E	F	G
Porcelain	2.56 (65)	6.42 (163)	5.02 (127)	5.02 (127)	3.62 (91)
Stainless Steel or Karbate	2.50 (63)	6.00 (152)	6.00 (152)	4.50 (114)	4.50 (114)

Model C10 with displacer arrangements D and F

Displacer Type	C	D	E	F
Porcelain	2.56 (65)	11.44 (230)	5.02 (127)	5.02 (127)
Stainless Steel or Karbate	2.50 (63)	12.00 (304)	6.00 (152)	4.50 (114)

Model C10 with displacer arrangements E and G

Displacer Type	C	D	E	F
Porcelain	2.56 (65)	6.42 (153)	5.02 (127)	8.65 (219)
Stainless Steel or Karbate	2.50 (63)	6.00 (152)	6.00 (152)	9.00 (228)

Electrical Connections
1/2" NPT
3/4" NPT
1" NPT
M20

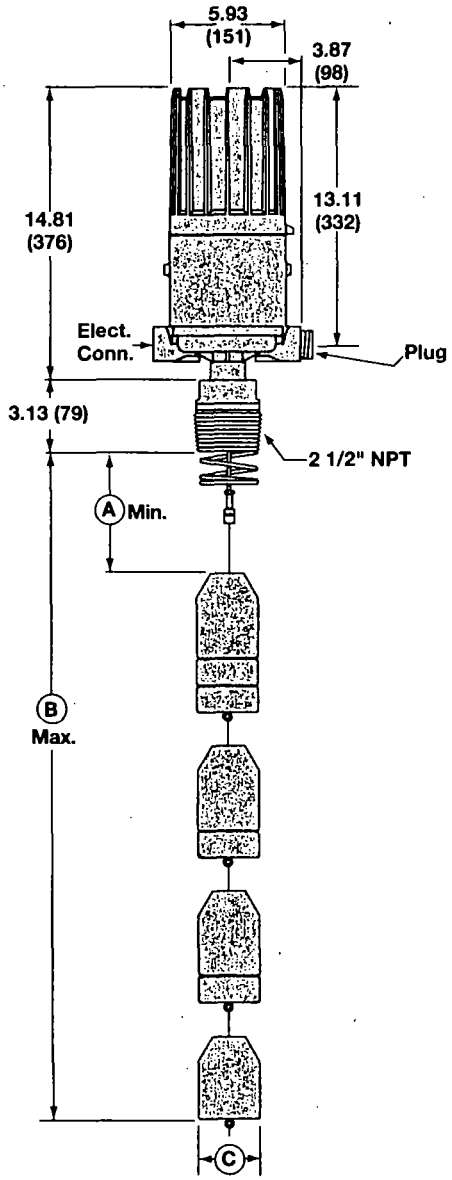

Model C10
with Threaded Mounting

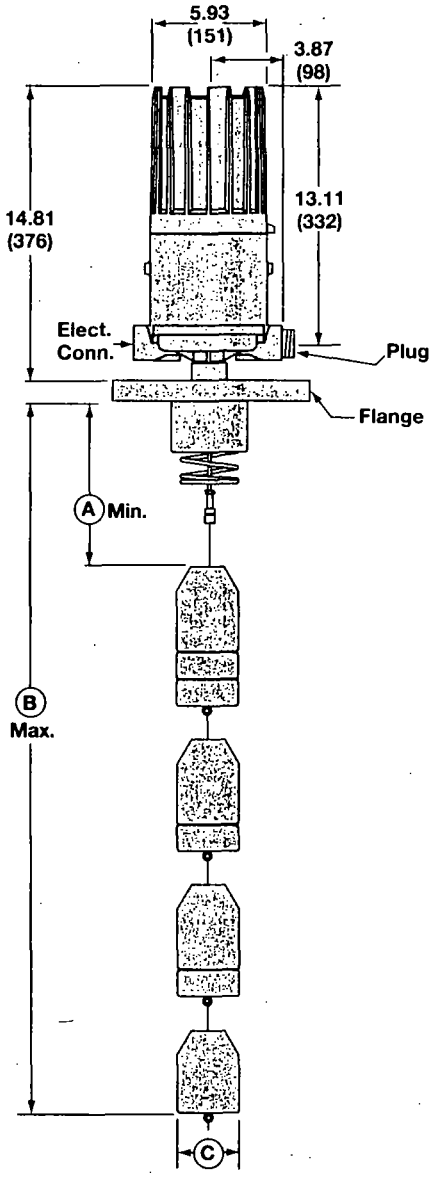

Model C10
with Flanged Mounting

MODEL C10 ACTUATING LEVELS

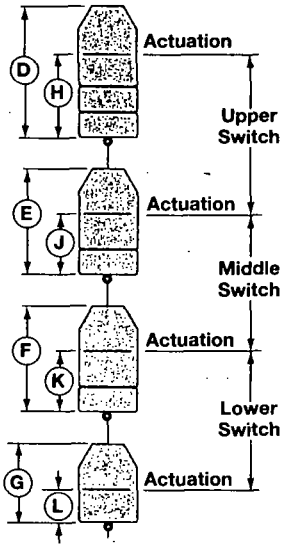

Model C10
Displacer Arrangement A

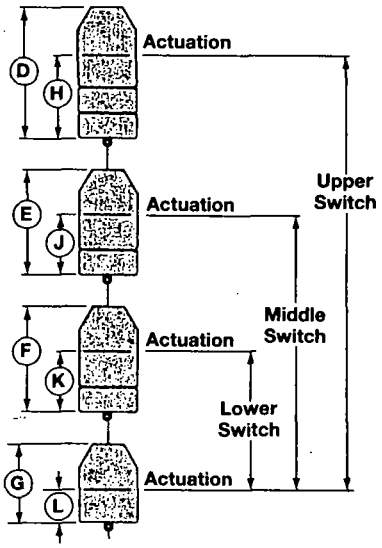

Model C10
Displacer Arrangement B

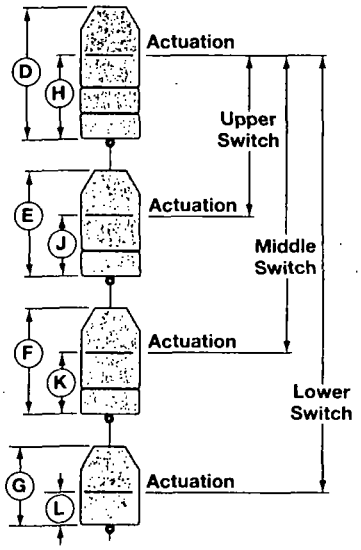

Model C10
Displacer Arrangement C

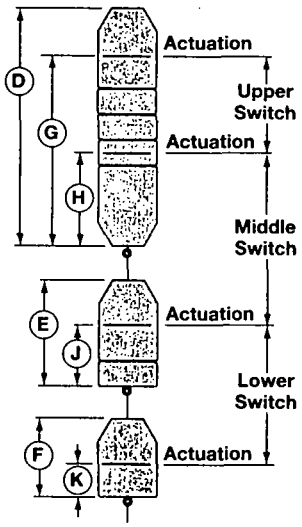

Model C10
Displacer Arrangement D

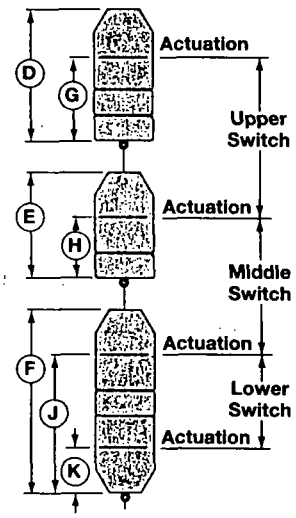

Model C10
Displacer Arrangement E

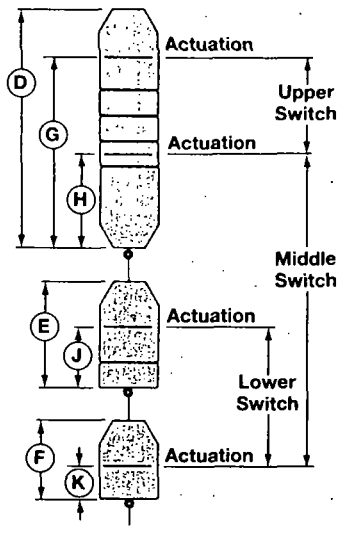

Model C10
Displacer Arrangement F

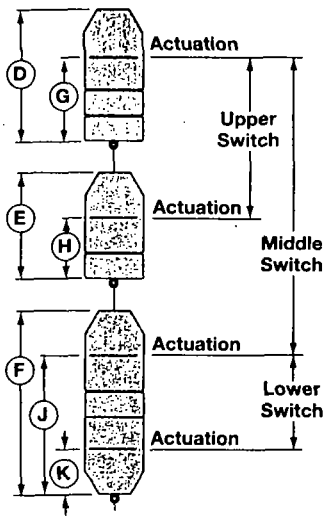

Model C10
Displacer Arrangement G

MODEL C10 ACTUATING LEVELS cont.

C10 Standard actuating levels and liquid specific gravity with displacer arrangements A, B, and C

Displacer Type	Liquid Temp. °F	0.58				0.60				0.70				0.80			
		H	J	K	L	H	J	K	L	H	J	K	L	H	J	K	L
Porcelain	100	—	—	—	—	—	—	—	—	2.50 (63)	2.20 (55)	2.20 (55)	2.00 (50)	2.30 (58)	2.00 (50)	1.90 (48)	1.70 (43)
Stainless Steel or Karbate	100	4.50 (114)	3.70 (93)	3.20 (81)	2.30 (58)	3.80 (96)	3.20 (81)	3.00 (76)	2.20 (55)	4.20 (106)	3.80 (96)	2.10 (53)	1.90 (48)	1.80 (45)	2.20 (55)	1.30 (33)	1.70 (43)
	200	—	—	—	—	—	—	—	—	—	—	—	—	3.20 (81)	2.90 (73)	2.50 (63)	2.30 (58)

Displacer Type	Liquid Temp. °F	0.90				1.00				1.10				1.20			
		H	J	K	L	H	J	K	L	H	J	K	L	H	J	K	L
Porcelain	100	—	—	—	—	—	—	—	—	2.50 (63)	2.20 (55)	2.20 (55)	2.00 (50)	2.30 (58)	2.00 (50)	1.90 (48)	1.70 (43)
	200	—	—	—	—	—	—	—	—	2.50 (63)	2.20 (55)	2.20 (55)	2.00 (50)	2.30 (58)	2.00 (50)	1.90 (48)	1.70 (43)
Stainless Steel or Karbate	100	4.50 (114)	3.70 (93)	3.20 (81)	2.30 (58)	3.80 (96)	3.20 (81)	3.00 (76)	2.20 (55)	4.20 (106)	3.80 (96)	2.10 (53)	1.90 (48)	1.80 (45)	2.20 (55)	1.30 (33)	1.70 (43)
	200	—	—	—	—	—	—	—	—	—	—	—	—	3.20 (81)	2.90 (73)	2.50 (63)	2.30 (58)
	300	—	—	—	—	—	—	—	—	—	—	—	—	3.20 (81)	2.90 (73)	2.50 (63)	2.30 (58)

C10 Standard actuating levels and liquid specific gravity with displacer arrangements D and F

Displacer Type	Liquid Temp. °F	0.58				0.60				0.70				0.80			
		G	H	J	K	G	H	J	K	G	H	J	K	G	H	J	K
Porcelain	100	—	—	—	—	—	—	—	—	7.50 (190)	2.60 (66)	2.20 (55)	2.00 (50)	6.90 (175)	2.40 (60)	1.90 (48)	1.70 (43)
Stainless Steel or Karbate	100	9.90 (251)	3.70 (93)	3.20 (81)	2.30 (58)	9.20 (233)	3.20 (81)	3.00 (76)	2.20 (55)	8.90 (226)	3.80 (96)	2.10 (53)	1.90 (48)	6.70 (170)	2.20 (55)	1.30 (33)	1.70 (43)
	200	—	—	—	—	—	—	—	—	—	—	—	—	7.40 (187)	2.90 (73)	2.50 (63)	2.30 (58)

Displacer Type	Liquid Temp. °F	0.90				1.00				1.10				1.20			
		G	H	J	K	G	H	J	K	G	H	J	K	G	H	J	K
Porcelain	100	6.60 (167)	2.80 (71)	2.70 (68)	1.50 (38)	5.20 (132)	1.80 (45)	2.10 (53)	1.40 (35)	6.10 (154)	3.00 (76)	2.50 (63)	1.20 (30)	5.00 (127)	2.10 (53)	2.10 (53)	1.10 (27)
	200	—	—	—	—	6.20 (157)	3.10 (78)	2.80 (71)	1.70 (43)	5.20 (132)	2.10 (53)	2.30 (58)	1.60 (40)	—	—	—	—
Stainless Steel or Karbate	100	7.20 (182)	3.20 (81)	2.50 (63)	1.50 (38)	5.50 (139)	1.90 (48)	1.80 (45)	1.30 (33)	6.40 (162)	3.20 (81)	2.50 (63)	1.30 (33)	5.20 (132)	2.20 (55)	1.90 (48)	1.20 (30)
	200	7.60 (193)	3.60 (91)	1.70 (43)	2.00 (50)	5.90 (149)	2.30 (58)	1.10 (27)	1.80 (45)	—	—	—	—	—	—	—	—
	300	7.00 (177)	3.00 (76)	2.40 (60)	2.70 (68)	5.40 (137)	1.80 (45)	1.70 (43)	2.40 (60)	—	—	—	—	—	—	—	—

MODEL C10 ACTUATING LEVELS cont.

C10 Standard actuating levels and liquid specific gravity with displacer arrangements E and G

Displacer Type	Liquid Temp. °F	0.58				0.60				0.70				0.80			
		G	H	J	K	G	H	J	K	G	H	J	K	G	H	J	K
Porcelain	100	—	—	—	—	—	—	—	—	2.50 (63)	2.20 (55)	5.80 (147)	1.90 (48)	2.30 (58)	2.00 (50)	5.50 (139)	2.10 (53)
Stainless Steel or Karbate	100	4.50 (114)	3.70 (93)	7.70 (195)	2.80 (71)	3.80 (96)	3.20 (81)	7.50 (190)	2.70 (68)	4.20 (106)	3.80 (96)	6.60 (167)	2.50 (63)	1.80 (45)	2.20 (55)	5.80 (147)	2.20 (55)
	200	—	—	—	—	—	—	—	—	—	—	—	—	3.20 (81)	2.90 (73)	7.00 (177)	3.40 (86)

Displacer Type	Liquid Temp. °F	0.90				1.00				1.10				1.20			
		G	H	J	K	G	H	J	K	G	H	J	K	G	H	J	K
Porcelain	100	3.00 (76)	2.40 (60)	6.30 (160)	3.20 (81)	1.40 (35)	1.40 (35)	5.70 (144)	1.90 (48)	3.00 (76)	2.60 (66)	6.10 (154)	3.60 (91)	1.70 (43)	1.70 (43)	5.70 (144)	3.40 (86)
	200	—	—	—	—	3.20 (81)	2.70 (68)	6.40 (162)	3.60 (91)	1.70 (43)	1.70 (43)	5.90 (149)	3.40 (86)	—	—	—	—
Stainless Steel or Karbate	100	3.10 (78)	3.20 (81)	7.00 (177)	3.80 (96)	1.30 (33)	1.90 (48)	6.30 (160)	3.40 (86)	3.10 (78)	3.20 (81)	7.00 (177)	4.40 (111)	1.60 (40)	2.20 (55)	6.40 (162)	4.00 (101)
	200	3.60 (91)	3.60 (91)	6.20 (157)	3.00 (76)	1.70 (43)	2.30 (58)	5.60 (142)	2.70 (68)	—	—	—	—	—	—	—	—
	300	3.40 (86)	3.00 (76)	6.90 (175)	3.70 (93)	1.60 (40)	1.80 (45)	6.20 (157)	3.30 (83)	—	—	—	—	—	—	—	—

MODEL C15 DIMENSIONAL DATA

DIMENSIONAL DATA cont. INCHES (MM)

Model C15

OUTLINE DIMENSIONS				
Displacer Type	Threaded Mounting		Flanged Mounting	
	A	B	A	B
Porcelain	7.75 (196)	125.00 (3175)	9.75 (247)	127.00 (3225)
Stainless Steel or Karbate	7.25 (184)	124.00 (3149)	9.25 (234)	126.00 (3200)

Displacer Type	C	D	E	F
Porcelain	2.56 (65)	7.25 (184)	6.42 (163)	5.02 (127)
Stainless Steel or Karbate	2.50 (63)	9.00 (228)	7.50 (190)	6.00 (152)

Electrical Connections
1/2" NPT
3/4" NPT
1" NPT
M20

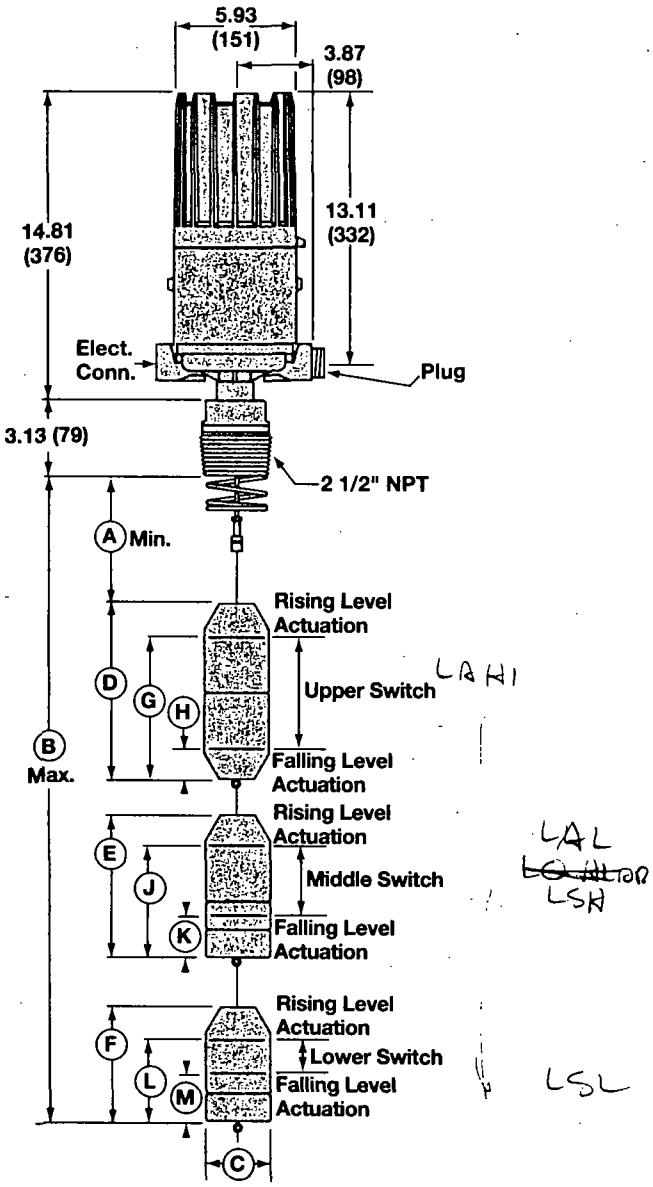

Model C15
with Threaded Mounting

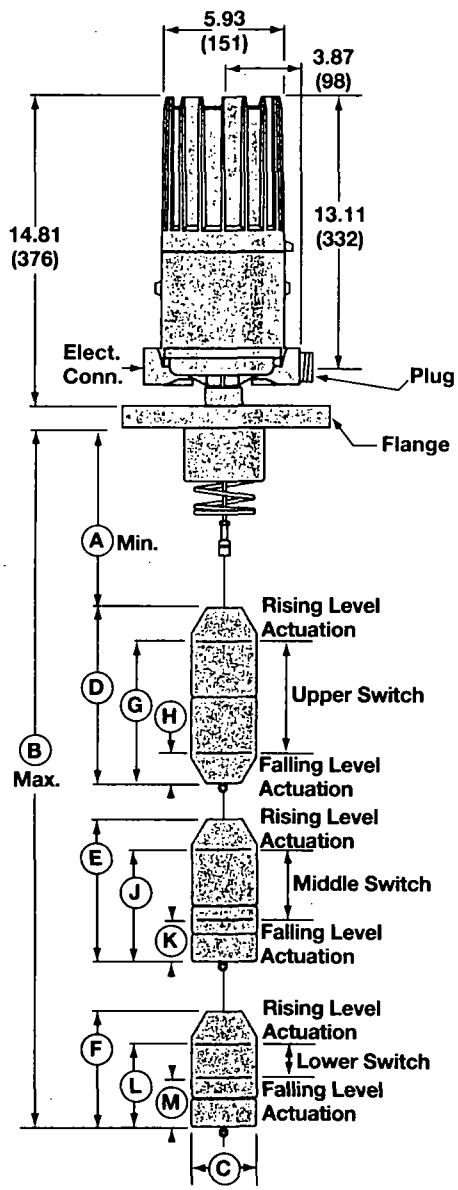

Model C15
with Flanged Mounting

MODEL C15 ACTUATING LEVELS

DIMENSIONAL DATA cont. INCHES (MM)

C15 Standard actuating levels and liquid specific gravity — inches

Displacer Type	Liquid Temp. °F	0.65						0.70						0.80					
		G	H	J	K	L	M	G	H	J	K	L	M	G	H	J	K	L	M
Porcelain	0 to +130	—	—	—	—	—	—	—	—	—	—	—	—	6.20 (157)	1.40 (35)	5.30 (134)	1.00 (25)	3.80 (96)	0.90 (22)
Stainless Steel or Karbate	0 to +130	7.70 (195)	2.20 (55)	6.10 (154)	2.00 (50)	4.90 (124)	1.40 (35)	6.70 (170)	1.60 (40)	5.50 (139)	1.60 (40)	4.60 (116)	1.30 (33)	6.50 (165)	2.00 (50)	5.20 (132)	1.60 (40)	4.30 (109)	1.10 (27)

Displacer Type	Liquid Temp. °F	0.90						1.00						1.10					
		G	H	J	K	L	M	G	H	J	K	L	M	G	H	J	K	L	M
Porcelain	0 to +130	6.20 (157)	1.90 (48)	5.00 (127)	1.40 (35)	3.60 (91)	1.00 (25)	4.60 (116)	0.70 (17)	4.00 (101)	0.80 (20)	3.30 (83)	0.90 (22)	4.20 (106)	1.10 (27)	3.80 (96)	1.00 (25)	3.10 (78)	0.90 (22)
Stainless Steel or Karbate	0 to +130	6.60 (167)	2.60 (66)	5.20 (132)	1.80 (45)	4.00 (101)	1.20 (30)	4.60 (116)	1.00 (25)	4.00 (101)	1.00 (25)	3.60 (91)	1.10 (27)	—	—	—	—	—	—

Displacer Type	Liquid Temp. °F	1.20						1.25					
		G	H	J	K	L	M	G	H	J	K	L	M
Porcelain	0 to +130	4.50 (114)	1.60 (40)	3.70 (93)	1.10 (27)	2.90 (73)	0.90 (22)	3.90 (99)	1.10 (27)	3.30 (83)	0.90 (22)	2.80 (71)	0.80 (20)

PROOF-ER DIMENSIONAL DATA

DIMENSIONAL DATA cont. INCHES (MM)

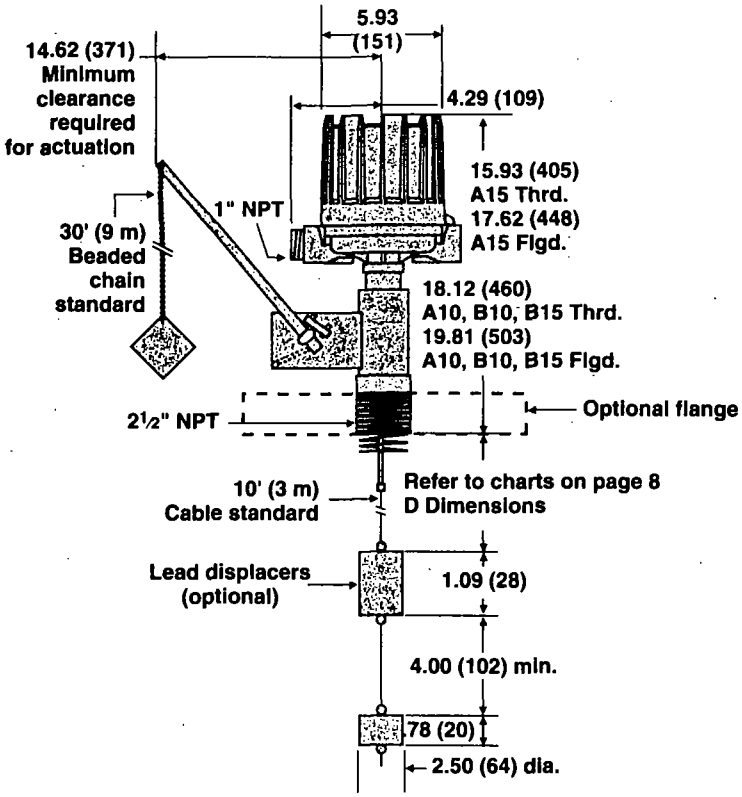

TYPICAL PROOF-ER INSTALLATION WITH VERSA FLANGE

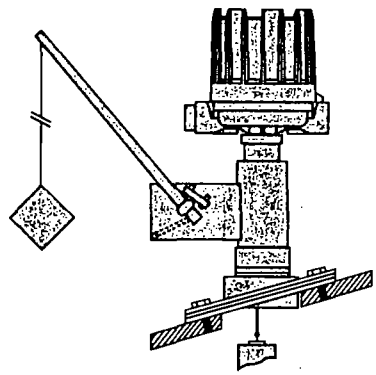

VERSA FLANGE ASSEMBLY
PART NUMBER 089-5207-001

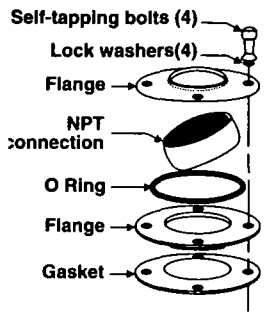

VERSA FLANGE BOLT CIRCLE

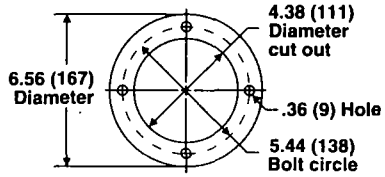

PROOF-ER REPLACEMENT PARTS

Item	Description	Proof-er Replacement Part Number	
		Low Pressure	Medium Pressure
1	Handle	004-4011-001	004-0490-001
2	O-Ring	Not Required	012-2205-001
3	Spring	013-2502-001	013-2502-001
4	Cable Assembly	032-3101-015	
5	O-Ring Cover	Not Required	004-0489-001
6	Nut	010-2107-004	Not Required

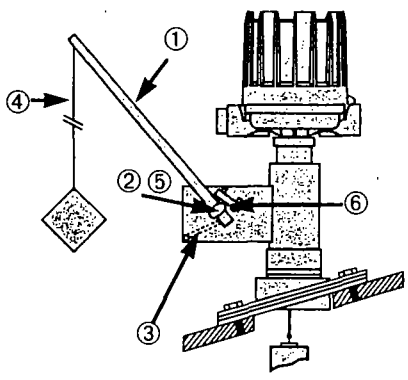

REPLACEMENT PARTS

Item No.	Description		A10	A15	B10/B15	C10/C15
1	Enclosing Tube	Standard	32-6325-007	32-6325-001	32-6325-007	32-6301-029
		316 SS	32-6325-008	32-6325-002	32-6325-008	32-6302-029
2	E-Tube Gasket		12-1301-002			
3	Spring and Stem Kit①	Standard	89-5327-001	89-5325-001	Consult Factory	
		316 SS	89-5328-001	89-5326-001	Consult Factory	
4	Body Bushing		89-5707-001			
5	Flange and Spring Protector		Specify size and rating. Furnish serial number of control.			

① 316 SS Spring and Stem Kit includes 316 SS sheathed magnetic sleeve.

Displacer replacement parts

Displacer Material		A10	A15	B10	B15	C10③	C15
Porcelain②		89-6141-001	89-6142-001	89-6143-001	89-6144-001	89-6153-001	89-6156-001
Karbate②		89-6145-001	89-6146-001	89-6147-001	89-6148-001	89-6154-001	89-6157-001
Stainless Steel②		89-6149-001	89-6150-001	89-6151-001	89-6152-001	89-6155-001	89-6158-001
10 feet (3m) Cable with Displacer Clamps only	316 SS	89-5802-003③					
	Hastelloy	89-5803-003③					
	Monel	89-5804-003③					

② Kits contain 10 feet (3m) 316 SS cable.
③ For Model C10 with operating sequences A, B, or C order kits:
89-5802-004 (316 SS), 89-5803-003 (Hastelloy), or 89-5804-004 (Monel).

NOTE: Refer to pages 9 and 11 for dimensional specifications of displacers.

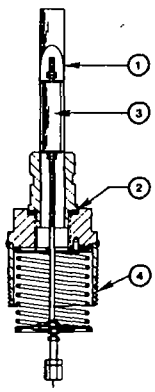

Threaded Connection Model
(Typical Single Switch Model)

Flanged Connection Model
(Typical Dual Switch Model)

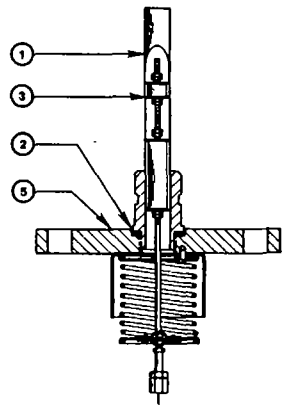

CAUTION:
Location of magnetic sleeve must be maintained for proper switch actuation. Do NOT attempt to alter differential of control by repositioning jam nuts. When disassembling control for maintenance, be certain to measure position of jam nuts on stem and record for reference use during reassembly.

SPECIFICATIONS

BASIC ELECTRICAL RATINGS

Voltage	Switch Series and Non-Inductive Ampere Rating									
	A	B	C	D	E	HS	N	O	Q	T
120 VAC	13.00	15.00	15.00	10.00	4.00	5.00	13.00	15.00	15.00	4.00
240 VAC	6.50	15.00	15.00	—	2.00	5.00	6.50	15.00	15.00	2.00
24 VDC	10.00	6.00	10.00	10.00	—	5.00	—	—	6.00	—
120 VDC	10.00	0.50	1.00	10.00	4.00	0.50	10.00	1.00	0.50	4.00
240 VDC	5.00	0.25	0.50	3.00	2.00	0.25	5.00	0.50	0.25	2.00

PRESSURE/TEMPERATURE RATINGS

Threaded Models ①	800 PSIG @ +100° F (55 Bar @ +38° C) 250 PSIG @ +400° F (17 Bar @ +204° C)
Flanged Models	Limited to the pressure rating of the selected flange or displacer. Cast iron flanges are flat face type conforming to ANSI dimensional specifications.
Low Pressure Proof-er Models	25 PSIG @ +200° F (1.7 Bar @ +93° C)
Medium Pressure Proof-er Models	125 PSIG @ +300° F (8.6 Bar @ +149° C)

① Models with stainless steel displacers are rated 720 PSIG @ +100° F (50 Bar @ 38° C)

AGENCY APPROVALS

Agency	Approval	Models
CSA	Non-Hazardous CSA TYPE 4X	All models with a Series B, C, D, O, or Q electric switch mechanism and a housing listed as CSA TYPE 4X.
	Class I, Div. 2 Groups B, C, & D	All models with a Series A, E, HS, N or T electric switch mechanism and a housing listed as CSA TYPE 4X.
	Class I, Div. 1, ② Groups C & D Class II, Div. 1, Groups E, F, & G	All models with an electric switch mechanism and a housing listed as NEMA 4X/7/9.
	Class I, Div. 1, Groups B, C, & D Class II, Div. 1, Groups E, F, & G	All models with an electric switch mechanism and a housing listed as NEMA 4X/7/9 Class I, Div. 1, Group B.
CENELEC	EEx d IIC T6	All models with aN electric switch mechanism and a CENELEC housing. ①

Agency	Approval	Models
FM	Non-Hazardous NEMA 4X	All models with an electric switch mechanism and a housing listed as NEMA 4X.
	Class I, Div. 1, ② Groups C & D Class II, Div. 1, Groups E, F, & G	All models with an electric switch mechanism and a housing listed as NEMA 4X/7/9.
	Class I, Div. 1, Groups B, C, & D Class II, Div. 1, Groups E, F, & G	All models with an electric switch mechanism and a housing listed as NEMA 4X/7/9 Class I, Div. 1, Group B.
Baseefa	Ex d IIC T6	All models with an electric switch mechanism and a Baseefa housing. ①
SAA	Ex d IIC T6 IP65	All models with a Series A, B, C, D, E or HS electric switch mechanism and a housing listed as NEMA 4X/7/9 Class I, Group B, Div. 1.

① If cover extensions are requested, this listing reverts to Class I, Div. 1, Group B.

② Consult the factory for the proper switch mechanism code.

NOTES

IMPORTANT

PRODUCT WARRANTY

All Magnetrol/STI mechanical level and flow controls are warranted free of defects in materials or workmanship for five full years from the date of original factory shipment. Repair parts are warranted free of defects in materials and workmanship for one year from the date of shipment. Materials, specifications, and contents are subject to change without prior written notice.

If returned within the warranty period; and, upon factory inspection of the control, the cause of the claim is determined to be covered under the warranty; then, Magnetrol/STI will repair or replace the control at no cost to the purchaser (or owner) other than transportation.

Magnetrol/STI shall not be liable for misapplication, labor claims, direct or consequential damage or expense arising from the installation or use of equipment. There are no other warranties expressed or implied, except special written warranties covering some Magnetrol/STI products.

QUALITY ASSURANCE

The quality assurance system in place at Magnetrol/STI guarantees the highest level of quality throughout the company. Magnetrol/STI is committed to providing full customer satisfaction both in quality products and quality service.

Magnetrol's quality assurance system is registered to ISO 9001 and Z299.1 affirming its commitment to known international quality standards providing the strongest assurance of product/service quality available.

ASSURED QUALITY & SERVICE COST LESS

SERVICE POLICY

Owners of Magnetrol/STI controls may request the return of a control or any part of a control for complete rebuilding or replacement. They will be rebuilt or replaced promptly. Controls returned under our service policy must be returned by Prepaid transportation. Magnetrol/STI will repair or replace the control at no cost to the purchaser (or owner) other than transportation if:

1. Returned within the warranty period; and
2. The factory inspection finds the cause of the claim to be covered under the warranty.

If the trouble is the result of conditions beyond our control; or, is NOT covered by the warranty, there will be charges for labor and the parts required to rebuild or replace the equipment.

In some cases it may be expedient to ship replacement parts; or, in extreme cases a complete new control, to replace the original equipment before it is returned. If this is desired, notify the factory of both the model and serial numbers of the control to be replaced. In such cases, credit for the materials returned will be determined on the basis of the applicability of our warranty.

No claims for misapplication, labor, direct or consequential damage will be allowed.

LOW VOLTAGE DIRECTIVE

For use in Category II installations. If equipment is used in a manner not specified by manufacturer, protection provided by equipment may be impaired.

RETURN MATERIAL PROCEDURE

So that we may efficiently process any materials that are returned, it is essential that a "Return Material Authorization" (RMA) number be obtained from the factory, prior to the material's return. This is available through Magnetrol/STI's local representative or by contacting the factory. Please supply the following information:

1. Company Name
2. Description of Material
3. Serial Number
4. Reason for Return
5. Application

Any unit that was used in a process must be properly cleaned in accordance with OSHA standards, before it is returned to the factory.

A Material Safety Data Sheet (MSDS) must accompany material that was used in any media.

All shipments returned to the factory must be by prepaid transportation.

All replacements will be shipped F.O.B. factory.

STI Controls, L.P.
a subsidiary of Magnetrol International, Incorporated
5300 Belmont Road • Downers Grove, Illinois 60515-4499 • 630-969-4028 • Fax 630-969-9489

Magnetrol

5300 Belmont Road • Downers Grove, Illinois 60515-4499 • 630-969-4000 • Fax 630-969-9489 • Website http://www.magnetrol.com
6291 Dorman Road • Mississauga, Ontario L4V-1H2 • 905-678-2720 • Fax 905-678-7407
Heikenstraat 6 • B 9240 Zele, Belgium • 052 45.11.11 • Telex 25944 • Fax 052 45.09.93
Regent Business Ctr., Jubilee Rd. • Burgess Hill, Sussex RH15 9TL U.K. • 01444-871313 • Fax 01444-871317

©1997 Magnetrol International, Incorporated. All rights reserved. Printed in the USA.
Magnetrol and Magnetrol logotype are registered trademarks of Magnetrol International.

The brand and product names contained within this document are trademarks or registered trademarks of their respective holders.

BULLETIN: 45-610.11
EFFECTIVE: August 1997
SUPERSEDES: April 1996

FF

FLUID FLOW FAX TRANSMITTAL

DATE 8/28/97

TO Hal C.
RMT
[illegible]

FAX # 864 281 0288

FROM Pete

FLUID FLOW OF THE CAROLINAS, INC.
2108 CROWN VIEW DRIVE
CHARLOTTE, NORTH CAROLINA 28227
TELEPHONE 704-847-4464
FAX # 704-847-2377

Number of pages transmitted 3 (including transmittal form). If you do not receive the number of pages indicated, please call sender at the above number.

COMMENTS: RE: C15 Info

INSTALLATION DIMENSIONS Inches (mm)

C15 SERIES DISPLACER W/ FLANGED MOUNTING

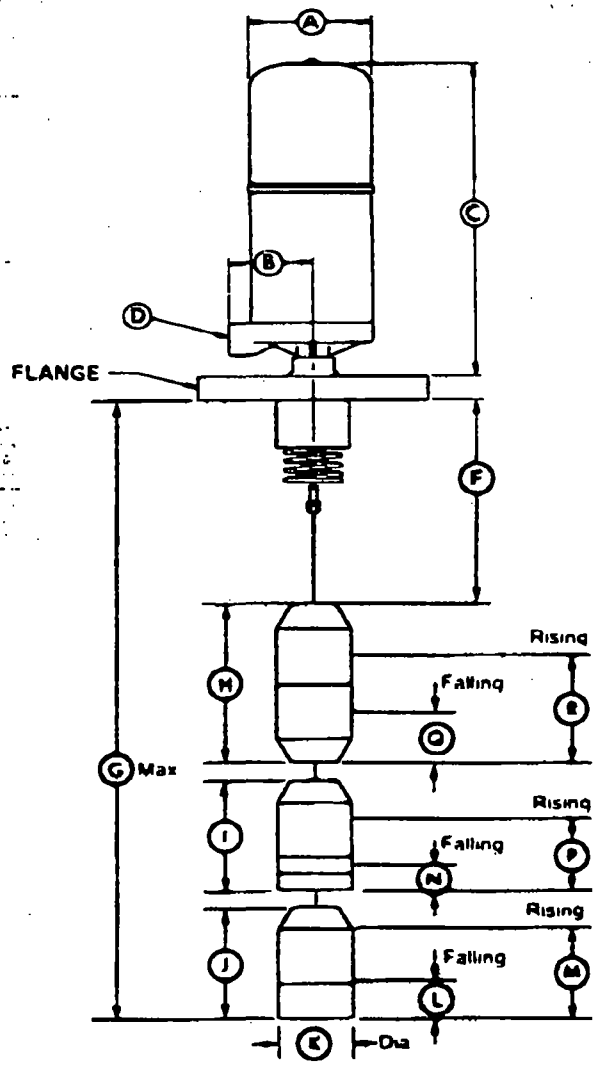

OUTLINE DIMENSIONS			
Housing	(A) Dia.	(B)	(C)
NEMA 4	4.70	3.38	14.50
	(119)	(86)	(368)
NEMA 7/9	5.80	5.25	15.70
	(147)	(133)	(399)

CONDUIT CONNECTIONS	
Electrical Switches NEMA 4: 3/4" NPT NEMA 7/9: 1" NPT	(D)

INSERTION AND DISPLACER DIMENSIONS						
Displacer Type	(F)	(G)	(H)	(I)	(J)	(K)
Porcelain	9.10	129	7.20	6.40	5.00	2.56
	(231)	(3277)	(183)	(163)	(127)	(65)
Stainless Steel or Karbate	8.70	129	9.00	7.80	6.80	2.60
	(221)	(3277)	(229)	(197)	(152)	(64)

STANDARD ACTUATING LEVELS & LIQUID SPECIFIC GRAVITY

See page two of this bulletin.

NOTES: ① Porcelain displacers have conical ends as shown. Other types have flat ends.
② Each instrument is calibrated to operate only at the specified specific gravity.
③ Dimensions in ( ) are in millimeters.
④ Standard suspension cable length— 10 Ft. (3 M)

(NOT FOR CONSTRUCTION UNLESS CERTIFIED)

TAG DATA

FOR _____

CUSTOMER P.O. NO./INQUIRY NO. _____ MAGNETROL ORDER NO./QUOTE NO. _____

PART NO. _____ QUANTITY _____

DISPLACER TYPE: ☐PORCELAIN ☐STAINLESS STEEL ☐KARBATE

SWITCH TYPE: ☐MERCURY ☐SNAP SWITCH HOUSING: ☐NEMA 4 ☐NEMA 7/9

SWITCH ACTION: ☐SPDT ☐DPDT

SWITCH RATING: _____ AMPS @ _____ VOLTS ☐AC ☐DC

SERVICE LIQUID: _____

MIN. SP. GR. _____ MAX. PRESS. _____ ☐PSI ☐BAR ☐KPA @ TEMPERATURE _____ ☐°F ☐°C

CERTIFIED BY: _____ DATE: _____

Flange Specifications
☐ANSI ☐DIN

Size _____"
Rating _____ Lbs.
Mat'l. _____
_____ Bolt Holes _____ Dia.
Bolt Circle Dia. _____
Outside Dia. _____

Magnetrol
5300 Belmont Road • Downers Grove, Illinois 60515-4499 • (708) 969-4600 • Fax 708-969-0489
6291 Dorman Road • Mississauga, Ontario L4V-1W2 • Phone: (416) 678-2720 • Fax 416-678-7407
Heltomastraat 6 • B 9240 Zele, Belgium • Tel. 052 45.11.11 • Telex 25944 • Fax 052 45.09.93

FORM: 45-584.4
EFFECTIVE: April 1991
SUPERSEDES: September 1990

NO.320 P002 FLUID FLOW CAROLINA → 18642810288 08/28/97 16:12

08/28/97 16:12 FLUID FLOW CAROLINA → 18642810288 NO.320 P003

STANDARD ACTUATING LEVELS & LIQUID SPECIFIC GRAVITY—Inches

Displacer Type	Liquid Temp. °F	0.65						0.70						0.80						0.90					
		(L)	(M)	(N)	(P)	(Q)	(R)	(L)	(M)	(N)	(P)	(Q)	(R)	(L)	(M)	(N)	(P)	(Q)	(R)	(L)	(M)	(N)	(P)	(Q)	(R)
Porcelain	0 to +130	—	—	—	—	—	—	—	—	—	—	—	—	0.9	3.6	1.0	5.3	1.4	6.2	1.0	3.6	1.4	5.0	1.9	6.2
Stainless Steel or Karbate	0 to +130	1.4	4.9	2.0	6.1	2.2	7.7	1.3	4.6	1.8	5.5	1.6	6.7	1.1	4.3	1.6	5.2	2.0	6.5	1.2	4.0	1.8	5.2	2.6	6.6

Displacer Type	Liquid Temp. °F	1.00						1.10						1.20						1.25					
		(L)	(M)	(N)	(P)	(Q)	(R)	(L)	(M)	(N)	(P)	(Q)	(R)	(L)	(M)	(N)	(P)	(Q)	(R)	(L)	(M)	(N)	(P)	(Q)	(R)
Porcelain	0 to +130	0.9	3.3	0.8	4.0	0.7	4.6	0.9	3.1	1.0	3.8	1.1	4.2	0.9	2.9	1.1	3.7	1.6	4.5	0.8	2.8	0.9	3.3	1.1	3.9
Stainless Steel or Karbate	0 to +130	1.1	3.8	1.0	4.0	1.0	4.8	—	—	—	—	—	—	—	—	—	—	—	—	—	—	—	—	—	—

NOTE: All Levels ± .25"

STANDARD ACTUATING LEVELS & LIQUID SPECIFIC GRAVITY—(mm)

Displacer Type	Liquid Temp. °C	0.65						0.70						0.80						0.90					
		(L)	(M)	(N)	(P)	(Q)	(R)	(L)	(M)	(N)	(P)	(Q)	(R)	(L)	(M)	(N)	(P)	(Q)	(R)	(L)	(M)	(N)	(P)	(Q)	(R)
Porcelain	−17.8 to +54.0	—	—	—	—	—	—	—	—	—	—	—	—	(23)	(97)	(25)	(135)	(36)	(157)	(25)	(91)	(36)	(127)	(49)	(157)
Stainless Steel or Karbate	−17.8 to +54.0	(36)	(124)	(51)	(155)	(58)	(196)	(33)	(117)	(41)	(140)	(41)	(170)	(28)	(109)	(41)	(132)	(51)	(165)	(30)	(102)	(46)	(132)	(66)	(168)

Displacer Type	Liquid Temp. °C	1.00						1.10						1.20						1.25					
		(L)	(M)	(N)	(P)	(Q)	(R)	(L)	(M)	(N)	(P)	(Q)	(R)	(L)	(M)	(N)	(P)	(Q)	(R)	(L)	(M)	(N)	(P)	(Q)	(R)
Porcelain	−17.8 to +54.0	(23)	(84)	(20)	(102)	(18)	(117)	(23)	(79)	(25)	(97)	(28)	(107)	(23)	(74)	(28)	(94)	(41)	(114)	(20)	(71)	(23)	(84)	(28)	(99)
Stainless Steel or Karbate	−17.8 to +54.0	(28)	(91)	(25)	(102)	(25)	(117)	—	—	—	—	—	—	—	—	—	—	—	—	—	—	—	—	—	—

NOTE: All Levels ± (6)

Magnetrol®
STI

Type S-5
Switch Mechanism

Instruction Manual and Parts List

Instruction Manual and Parts List

DESCRIPTION

The type S-5 switch mechanism uses a single mercury switch in conjunction with an actuating mechanism designed for use with a series of compact Magnetrol® liquid level controls. The unit is completely self-contained with numbered terminal block and removable mercury switch. SPST and SPDT switches are available for up to 13 AMP service.

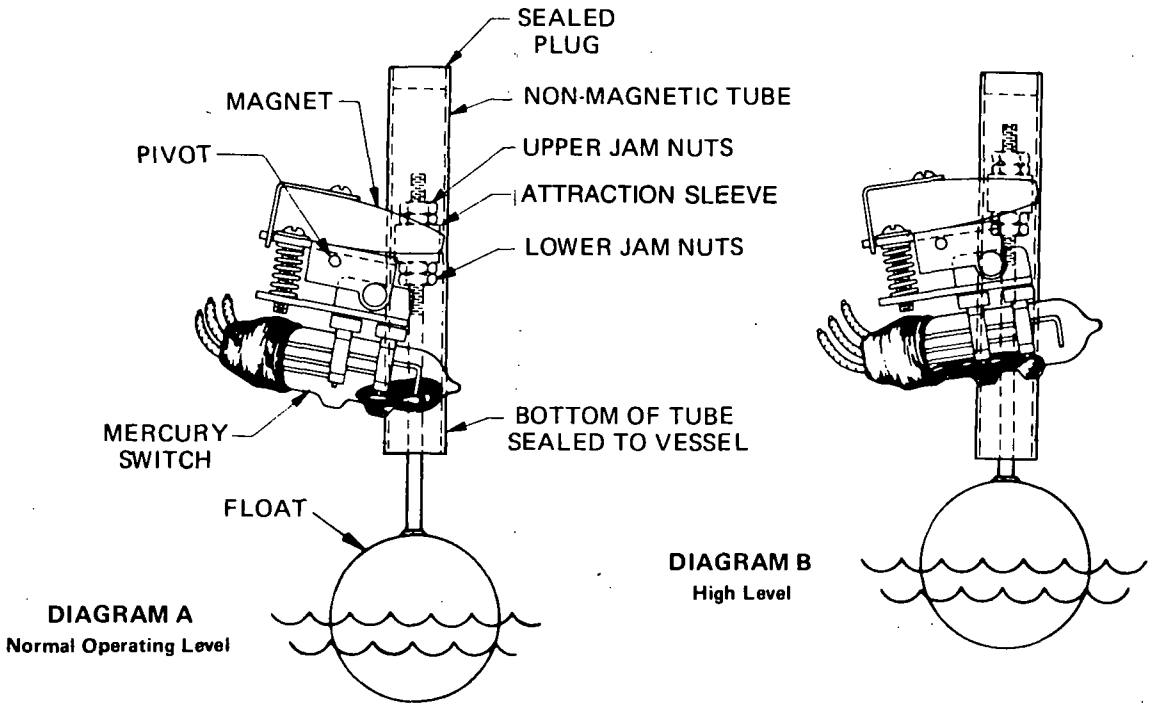

FIG. 1

OPERATING PRINCIPLE

Diagrams A and B illustrate the simple and foolproof Magnetrol operating principle. Switching action is obtained through the use of a magnetic sleeve actuated by a float and a switching mechanism. These two basic component assemblies are separated by a non-magnetic, pressure tight enclosing tube. The mercury switch and magnet are assembled to a pivoting arm which operates on precision stainless steel sockets.

OPERATING CYCLE

At "Normal Operating Level" of liquid in a storage vessel (diagram "A"), the float moves the attraction sleeve to its low position within the enclosing tube. The pivoted magnet

OPERATING CYCLE cont.

on the outside of the enclosing tube follows the attraction sleeve and tilts the mercury switch "making" or "breaking" an electrical circuit. As liquid level rises, the float moves the attraction sleeve upward in the enclosing tube until, at a predetermined "high level", the pivoted magnet (following the attraction sleeve) tilts the mercury switch in the opposite direction, thus reversing the switch action.

When liquid level returns to normal, the float once again moves the attraction sleeve down the enclosing tube followed by the pivoted magnet, causing the mercury switch to assume its original position.

WIRING INSTRUCTIONS

Most all Magnetrol switch housings are designed to allow 360° positioning of the conduit outlet for wiring convenience. Check housing furnished with your control to determine method used to secure housing on unit.

1. To gain access to interior conduit opening, remove switch housing cover.
2. Loosen switch mechanism mounting clamp screws (Fig. 2) until mechanism slides freely on enclosing tube.

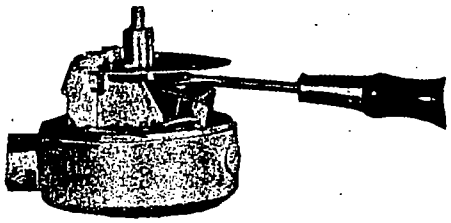

FIG. 2

3. Carefully lift off switch mechanism and place on clean surface, free of metal particles which may be attracted to switch magnet.

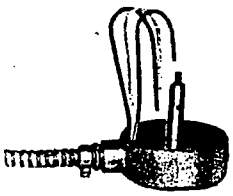

FIG. 3

4. Pull in supply wires (conductors) as shown in Fig. 3.

NOTE: On high temperature applications, asbestos covered wire should be used between control and first junction box located in a cooler area.

5. Replace switch mechanism to its original position on enclosing tube (tight to hub in housing base) and re-tighten clamp screws.
6. Connect supply wires to proper terminals and position excess wire over baffle plate, as shown in Fig. 4. Replace housing cover.

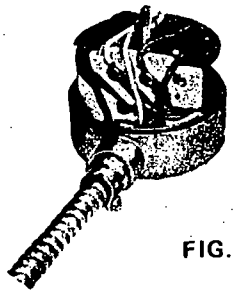

FIG. 4

TERMINAL CONNECTIONS

TERMINAL CONNECTIONS FOR SPDT SWITCHES

An SPDT (single pole, double throw) switch handles two electrical circuits. Tilting the switch "makes" one circuit and simultaneously "breaks" the second circuit.

*Be certain high load is attached to terminals for mercury to mercury contact side of switch and low load to terminals for mercury to electrode side. With switch S53, attach high load to terminals 5 and 6. With switch S54, attach high load to terminals 4 and 5.

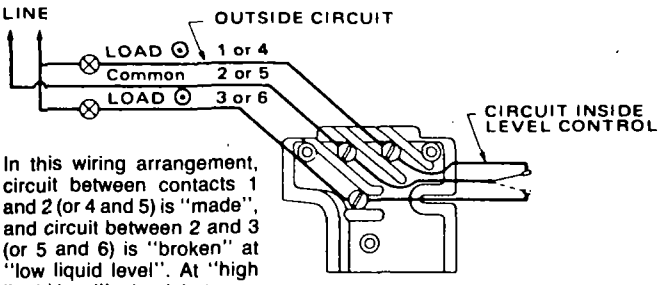

In this wiring arrangement, circuit between contacts 1 and 2 (or 4 and 5) is "made", and circuit between 2 and 3 (or 5 and 6) is "broken" at "low liquid level". At "high liquid level", circuit between contacts 1 and 2 (or 4 and 5) is "broken" and circuit between 2 and 3 (or 5 and 6) is "made".

TERMINAL CONNECTIONS FOR SPST SWITCHES

An SPST (single pole, single throw) switch involves one electrical circuit only. Tilting the switch in one direction will "make" the circuit. Tilting in opposite direction "breaks" the circuit.

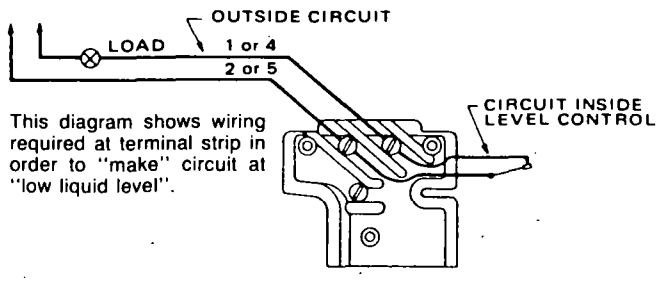

This diagram shows wiring required at terminal strip in order to "make" circuit at "low liquid level".

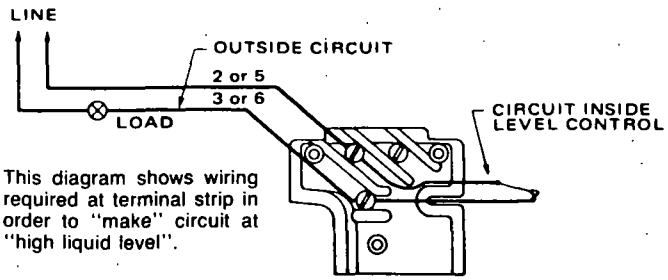

This diagram shows wiring required at terminal strip in order to "make" circuit at "high liquid level".

FIG. 5

SWITCH REPLACEMENT

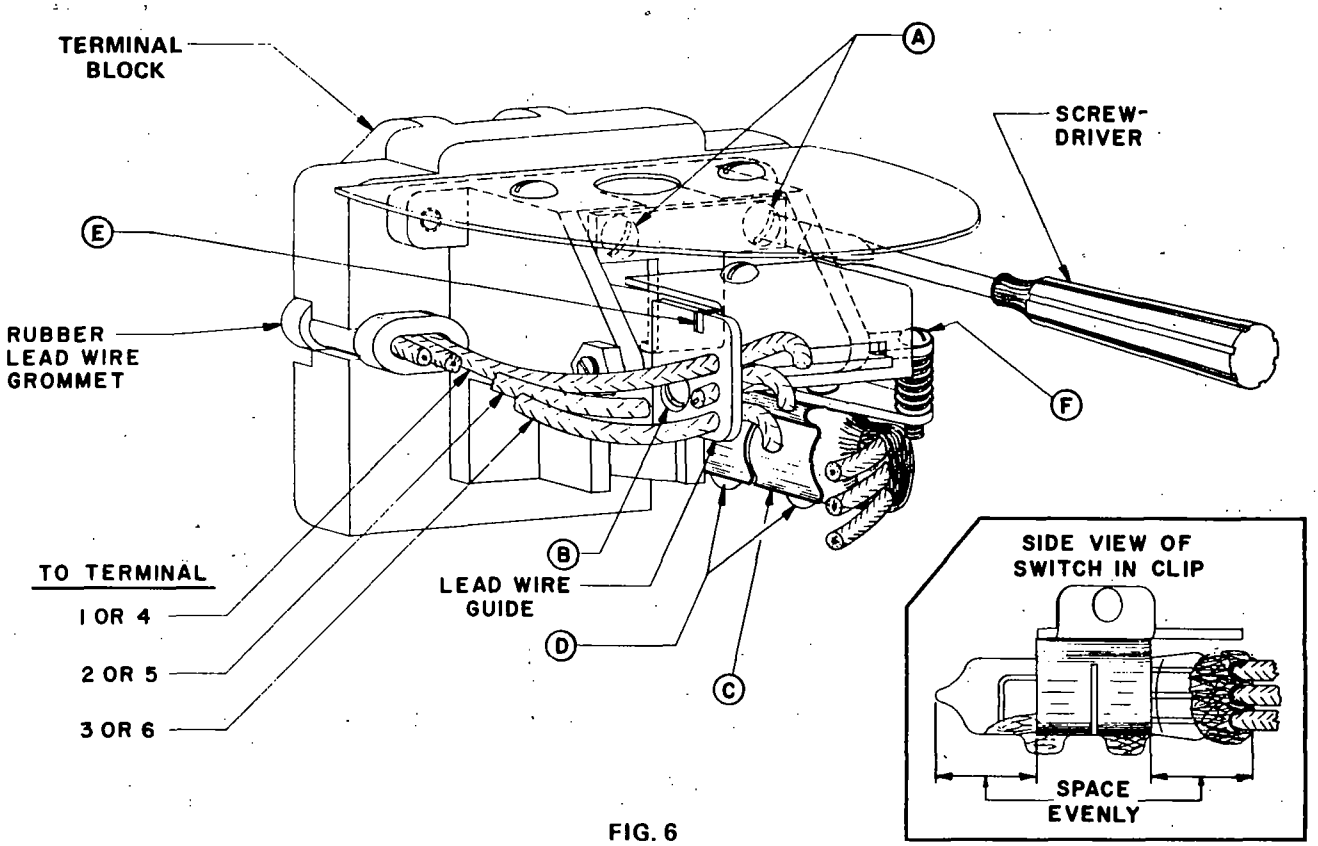

FIG. 6

Mercury switches used in Magnetrol S-5 type switch mechanisms are easily removed and replaced when damaged or broken.

CAUTION: Before attempting to remove a switch mechanism, be certain to pull disconnect switch or otherwise assure that electrical circuit through control is de-energized.

1. Disconnect Magnetrol control from power supply.
2. Disconnect supply and switch wire leads from terminal block, noting terminal post numbers marked on switch mechanism.
3. Loosen mounting clamp screws "A" and carefully lift switch mechanism off enclosing tube and place on clean surface.

NOTE: Before removing existing mercury switch, loosen cement holding switch by gentle prying between switch clips "C" and glass tube.

4. Remove lead wire guide attachment screw "B" then slip switch out of clips carefully noting position of switch in holding clips.
5. Replace new mercury switch into clips "C" making certain that cups "D" in glass tube are pointing straight down and switch ends are evenly spaced in holding clip, as shown in inset side view above.
6. Glue switch to clips "C" using a cement such as DuPont Duco, Goodyear Pliobond, Shellac, or equivalent.
7. Place lead wire guide in position, making certain switch leads are not twisted around each other and the locating slot in the guide is over tab "E". Attach screw "B" and tighten securely.

NOTE: Replacement mercury switch will be tagged with terminal numbers matching post numbers on switch mechanism.

8. Attach switch wire leads to terminals beginning with lowest terminal number first, highest number last.

NOTE: S-5 mechanisms with rubber grommet at terminal block must have lead wires run through grommet first, then grommet must be replaced in slot provided in terminal block as shown. Be certain to keep lead wires in numerical order with lowest number first positioned next to mechanism frame.

9. Place switch mechanism onto enclosing tube of control and position near top of tube for access ease. Tighten mount screws "A" lightly to hold in place.
10. Check switch tilt carefully and adjust as follows:
    A. Tilt switch slowly by hand and observe movement of mercury between cups in glass tube.
    B. If necessary, adjust screw "F" to even switch tilt so that mercury travel is equal between switch "make" and "break".

NOTE: A properly adjusted mercury switch will have an equal amount of over-travel tilt in both directions after switch actuation.

11. Move mechanism down to its operating position on enclosing tube (tight to hub in housing base with terminal block facing conduit outlet) and tighten clamp screws securely.
12. Reconnect supply wires and power supply. Test switch action by varying liquid level in the vessel or by "blowing down" float chamber.

REPLACEMENT PARTS

Important: When ordering, please specify: 1) Model and serial number of control; 2) name and number of part.

PART NUMBERS FOR TYPE S-5 GROUP II SWITCH MECHANISMS (W/MERCURY SWITCH)			
Description	Single Stage Controls	Multi-Stage Controls ①	
		"A" Mechanism	"B" Mechanism
SPST, make on low	89-7701-001	89-7701-011	89-7701-002
SPST, make on high	89-7701-003	89-7701-012	89-7701-004
SPDT, high capacity make on high	89-7701-005	89-7701-013	89-7701-006
SPDT, high capacity make on low	89-7701-007	89-7701-014	89-7701-008
SPDT, vibration resistant	89-7701-009	89-7701-015	89-7701-010

NOTE:

① Mechanisms used in multi-stage controls are installed in stacked arrangement and attached to switch spacer bracket. Replace "B" mechanism (w/terminals 4, 5 and 6) first followed by "A" mechanism (w/terminals 1, 2 and 3).

PART NUMBERS FOR MERCURY SWITCHES CNLY			
Description		Part Number	I.D. Code
SPST, make on low	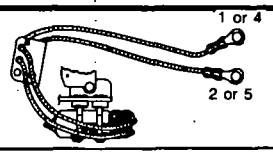	37-4111-001 (RP-1955 or 89-7101-028	S51
SPST, make on high	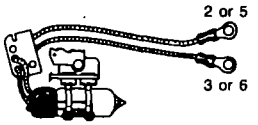	37-4111-001 (RP-1953 or 89-7101-027	S52
SPDT, mercury to mercury make on high	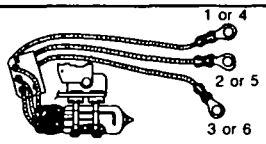	37-4308-001 (RP-1954 or 89-7101-030)	S53
SPDT, mercury to mercury make on low	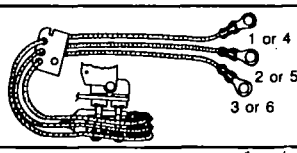	37-4309-001 (RP-1956 or 89-7101-031)	S54
SPDT, vibration resistant	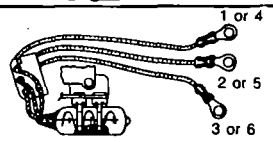	37-4306-001 (RP-2216 or 89-7101-029	S57

IMPORTANT

PRODUCT WARRANTY

All Magnetrol/STI level and flow controls are warranted free of defects in materials or workmanship from the date of original factory shipment. Mechanical controls are warranted for five full years; electronic controls for one full year.

If returned within the warranty period; and, upon factory inspection of the control, the cause of the claim is determined to be covered under the warranty; then, Magnetrol/STI will repair or replace the control at no cost to the purchaser (or owner) other than transportation.

Magnetrol/STI shall not be liable for misapplication, labor claims, direct or consequential damage or expense arising from the installation or use of equipment. There are no other warranties expressed or implied, except special written warranties covering some Magnetrol/STI products.

SERVICE POLICY

Owners of Magnetrol/STI controls may request the return of a control or any part of a control for complete rebuilding or replacement. They will be rebuilt or replaced promptly. Controls returned under our service policy must be returned by Prepaid transportation. Magnetrol/STI will repair or replace the control at no cost to the purchaser (or owner) other than transportation if:

1. Returned within the warranty period; and
2. The factory inspection finds the cause of the claim to be covered under the warranty.

If the trouble is the result of conditions beyond our control; or, is NOT covered by the warranty, there will be charges for labor and the parts required to rebuild or replace the equipment.

In some cases it may be expedient to ship replacement parts; or, in extreme cases a complete new control, to replace the original equipment before it is returned. If this is desired, notify the factory of both the model and serial numbers of the control to be replaced. In such cases, credit for the materials returned will be determined on the basis of the applicability of our warranty.

No claims for misapplication, labor, direct or consequential damage will be allowed.

QUALITY ASSURANCE

The quality assurance system in place at Magnetrol/STI guarantees the highest level of quality throughout the company. Magnetrol/STI is committed to providing full customer satisfaction both in quality products and quality service.

Magnetrol's quality assurance system is registered to ISO 9001 and Z299.1 affirming its commitment to known international quality standards providing the strongest assurance of product/service quality available.

RETURN MATERIAL PROCEDURE

So that we may efficiently process any materials that are returned, it is essential that a "Return Material Authorization" (RMA) number be obtained from the factory, prior to the material's return. This is available through Magnetrol/STI's local representative or by contacting the factory. Please supply the following information:

1. Company Name
2. Description of Material
3. Serial Number
4. Reason for Return
5. Application

Any unit that was used in a process must be properly cleaned in accordance with OSHA standards, before it is returned to the factory.

A Material Safety Data Sheet (MSDS) must accompany material that was used in any media.

All shipments returned to the factory must be by prepaid transportation.

All replacements will be shipped F.O.B. factory.

STI Controls, L.P.

a subsidiary of Magnetrol International, Incorporated

5300 Belmont Road • Downers Grove, Illinois 60515-4499 • 630-969-4028 • Fax 630-969-9489

Magnetrol

5300 Belmont Road • Downers Grove, Illinois 60515-4499 • 630-969-4000 • Fax 630-969-9489
6291 Dorman Road • Mississauga, Ontario L4V-1H2 • 905-678-2720 • Fax 905-678-7407
Heikenstraat 6 • B 9240 Zele, Belgium • 052 45.11.11 • Telex 25944 • Fax 052 45.09.93
Regent Business Ctr., Jubilee Rd. • Burgess Hill, Sussex RH15 9TL U.K. • 01444-871313 • Fax 01444-871317

BULLETIN: 42-619.4
EFFECTIVE: July 1986
SUPERSEDES: June 1976

TAG PT. NO.
05-9817-001

IMPORTANT—KEEP TAG FOR RECORD

PART NO. CODE XC15 - 1G3A - QCB

SERIAL NO. 1336758

PRODUCTION NO. M- 439984

SWITCH MECHANISM(S) WILL ACTUATE WHEN LIQUID LEVEL REACHES DISPLACERS. ADJUST DISPLACERS ON CABLE AT DESIRED DISTANCES WHERE LEVEL IS TO BE SENSED (ALLEN WRENCH FURNISHED). CUT OFF EXCESS CABLE SO IT WILL NOT HIT BOTTOM OF TANK AND INTERFERE WITH OPERATION. DO NOT CUT OFF MORE THAN 96.00 IN. (2438.4 MM)

PORCELAIN DISPLACERS

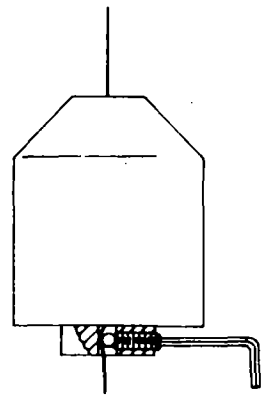

STAINLESS STEEL AND KARBATE DISPLACERS

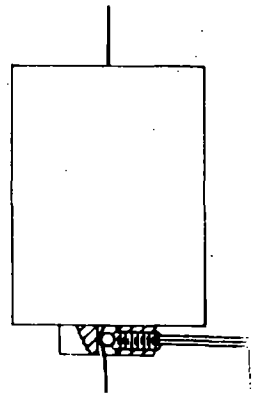

PART NUMBER CODE

MAGNETROL® DISPLACEMENT TYPE CONTROLS ARE IDENTIFIED BY A 10 DIGIT PART NUMBER CODE SUCH AS:

A10-1G2A-AAH

SEE INSTALLATION BULLETIN NO. 45-610 FOR COMPLETE DESCRIPTION OF CODES.

SWITCH ACTUATING LEVELS

IMPORTANT: PRIOR TO INSTALLING UNIT REFER TO INSTRUCTION MANUAL BULLETIN 45-610

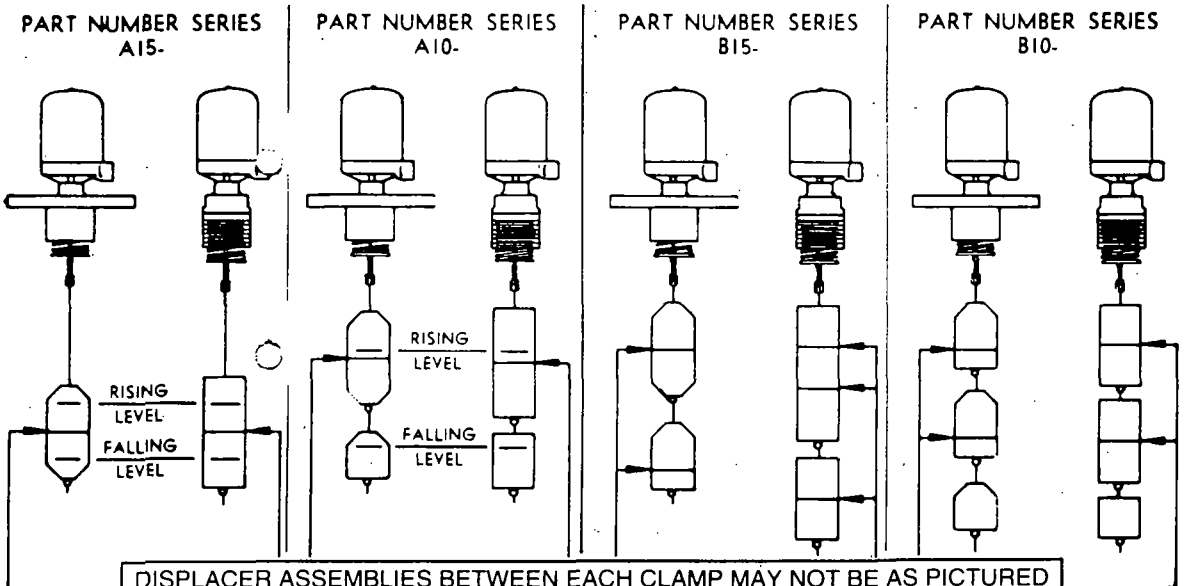

DISPLACER ASSEMBLIES BETWEEN EACH CLAMP MAY NOT BE AS PICTURED ABOVE. DO NOT REARRANGE OR REMOVE ANY PIECES OF EACH ASSEMBLY.

Magnetrol®
STI

Electric Switch Mechanisms Series A, B, C, D, E, F, L, M, N, O, Q, S, T, 2 & 3 with Aluminum, Carbon Steel, or Cast Iron Housings

Instruction Manual and Parts List

Magnetrol level controls are available with a range of different switch mechanisms—each designed for specific service conditions. A brief description of the individual switch mechanisms and their applications are given below.

MERCURY SWITCHES
Series A, E, M, N and T

Mercury switches offer the advantage of quick visual inspection of contact conditions.

- **A** switches are heavy duty units with high load carrying capability.
- **E** switches are specially designed to provide greater vibration resistance.
- **M** switches are used with manual reset assemblies.
- **N** switches are used only in model C10 and C15 units.
- **T** switches are used only in model C10 and C15 units.

HIGH TEMPERATURE MERCURY SWITCHES
Series L, 2 and 3

These switches offer the advantage of quick visual inspection of contact conditions, and feature nickel/copper bare wire and ceramic beaded insulation allowing use in applications where the process temperature does not exceed +750° F (+399° C).

- **L** switches are used only in model B40 units.
- **2** switches are specially designed to provide greater vibration resistance.
- **3** switches are heavy duty units with high load carrying capability.

DRY CONTACT SWITCHES
Series B, C, D, O, Q and S

Dry contact switches are specified in applications where mercury must be avoided.

- **B** switches are general purpose units with a maximum liquid temperature rating of +250° F (+121° C).
- **C** switches are general purpose units with a maximum liquid temperature rating +450° F (+232° C).
- **D** switches are designed for DC current applications.
- **O** switches are used only in model C10 and C15 units.
- **Q** switches are used only in model C10 and C15 units.
- **S** switches are used only in model B40 units.

HERMETICALLY SEALED SWITCHES
Series F

Hermetically sealed switches are for use in special applications where hermetically sealed contacts are required.

- **F** switches are well suited for use where the process temperature does not exceed +750° F (+399° C).

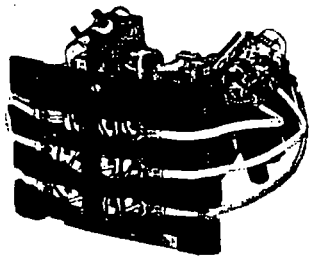

Series A, E, M, N and T Mercury Switches

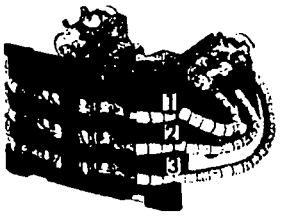

Series 2 and 3 High Temperature Mercury Switches

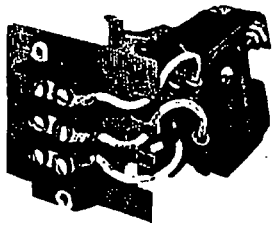

Series B, C, D, O and Q Dry Contact Switches

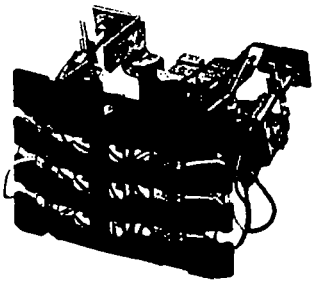

Series F Hermetically Sealed Switch

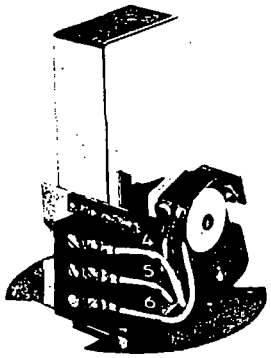

Series S Snap Switch

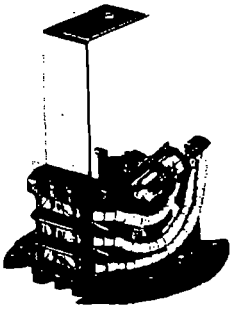

Series L Snap Switch

SWITCH MECHANISMS WITH ALUMINUM HOUSINGS

MODEL NUMBER DESCRIPTION

Mechanical level switches are identified by an alphanumeric part numbering system. The last three digits of the part number describe the type of switch mechanism, enclosing cover length and finish, and magnet strength.

Example: **B75-1 B20-AAA**

Basic model number

Materials of construction

Tank connections

Switch mechanism, enclosure and magnet strength

MAGNET STRENGTH

Switch mechanisms are provided with different strength magnets, as determined by the materials of construction. A red, white, or yellow dot is visible on each magnet. When ordering replacement switch mechanisms, be certain to determine the color dot on the magnet.

***CAUTION:** NEVER replace a switch mechanism with a mechanism containing a dot of a different color.*

ELECTRIC SWITCH MECHANISM AND ENCLOSURE CODES — RED DOT MAGNETS

Switch Des.	Max.* Proc. Temp. °F (°C)	Cont.	Set Points	NEMA 4X, Aluminum Polymer Coated				NEMA 4X/7/9, Aluminum Polymer Coated							
				Standard		Heater		Standard		Class I, Div. 1, Group B		Heater		Drain	
				Short	Tall	Short	Tall	Short	Tall	Short	Tall	Short	Tall	Short	Tall
Series A Mercury	550 (288)	SPDT	1	AAP	AAA	AFP	AFA	AKP	AKA	AKT	AKJ	APP	APA	AUP	AUA
			2	—	ABA	—	AGA	—	ALA	—	ALJ	—	AQA	—	AVA
			3	—	ACA	—	AHA	—	AMA	—	AMJ	—	ARA	—	AWA
		DPDT	1	ADP	ADA	AIP	AIA	ANP	ANA	ANT	ANJ	ASP	ASA	AXP	AXA
			2	—	AEA	—	AJA	—	AOA	—	AOJ	—	ATA	—	AYA
Series B Snap	250 (121)	SPDT	1	BAP	BAA	BFP	BFA	BKP	BKA	BKT	BKJ	BPP	BPA	BUP	BUA
			2	—	BBA	—	BGA	—	BLA	—	BLJ	—	BQA	—	BVA
			3	—	BCA	—	BHA	—	BMA	—	BMJ	—	BRA	—	BWA
		DPDT	1	BDP	BDA	BIP	BIA	BNP	BNA	BNT	BNJ	BSP	BSA	BXP	BXA
			2	—	BEA	—	BJA	—	BOA	—	BOJ	—	BTA	—	BYA
Series C Snap	450 (232)	SPDT	1	CAP	CAA	CFP	CFA	CKP	CKA	CKT	CKJ	CPP	CPA	CUP	CUA
			2	—	CBA	—	CGA	—	CLA	—	CLJ	—	CQA	—	CVA
			3	—	CCA	—	CHA	—	CMA	—	CMJ	—	CRA	—	CWA
		DPDT	1	CDP	CDA	CIP	CIA	CNP	CNA	CNT	CNJ	CSP	CSA	CXP	CXA
			2	—	CEA	—	CJA	—	COA	—	COJ	—	CTA	—	CYA
Series E Mercury Vibration Resistant	550 (288)	SPDT	1	EAP	EAA	EFP	EFA	EKP	EKA	EKT	EKJ	EPP	EPA	EUP	EUA
			2	—	EBA	—	EGA	—	ELA	—	ELJ	—	EQA	—	EVA
			3	—	ECA	—	EHA	—	EMA	—	EMJ	—	ERA	—	EWA
		DPDT	1	EDP	EDA	EIP	EIA	ENP	ENA	ENT	ENJ	ESP	ESA	EXP	EXA
			2	—	EEA	—	EJA	—	EOA	—	EOJ	—	ETA	—	EYA
Series F Snap Herm. Sealed	750 (399)	SPDT	1	FAP	FAA	FFP	FFA	FKP	FKA	FKT	FKJ	FPP	FPA	FUP	FUA
			2	—	FBA	—	FGA	—	FLA	—	FLJ	—	FQA	—	FVA
		DPDT	1	FDP	FDA	FIP	FIA	FNP	FNA	FNT	FNJ	FSP	FSA	FXP	FXA
			2	—	FEA	—	FJA	—	FOA	—	FOJ	—	FTA	—	FYA

* Process temperature based on +100°F (+38°C) ambient.

ELECTRIC SWITCH MECHANISM AND ENCLOSURE CODES — WHITE DOT MAGNETS

Switch Des.	Max.* Proc. Temp. °F (°C)	Cont.	Set Points	NEMA 4X, Aluminum Polymer Coated				NEMA 4X/7/9, Aluminum Polymer Coated							
				Standard		Heater		Standard		Class I, Div. 1, Group B		Heater		Drain	
				Short	Tall	Short	Tall	Short	Tall	Short	Tall	Short	Tall	Short	Tall
Series 2 Mercury Beaded Leads Vib. Res.	750 (399)	SPDT	1	2AP	2AA	2FP	2FA	2KP	2KA	2KT	2KJ	2PP	2PA	2UP	2UA
			2	—	2BA	—	2GA	—	2LA	—	2LJ	—	2QA	—	2VA
			3	—	2CA	—	2HA	—	2MA	—	2MJ	—	2RA	—	2WA
		DPDT	1	2DP	2DA	2IP	2IA	2NP	2NA	2NT	2NJ	2SP	2SA	2XP	2XA
			2	—	2EA	—	2JA	—	2OA	—	2OJ	—	2TA	—	2YA
Series 3 Mercury Beaded Leads	750 (399)	SPDT	1	3AP	3AA	3FP	3FA	3KP	3KA	3KT	3KJ	3PP	3PA	3UP	3UA
			2	—	3BA	—	3GA	—	3LA	—	3LJ	—	3QA	—	3VA
			3	—	3CA	—	3HA	—	3MA	—	3MJ	—	3RA	—	3WA
		DPDT	1	3DP	3DA	3IP	3IA	3NP	3NA	3NT	3NJ	3SP	3SA	3XP	3XA
			2	—	3EA	—	3JA	—	3OA	—	3OJ	—	3TA	—	3YA

* Process temperature based on +100°F (+38°C) ambient.

SWITCH MECHANISMS WITH ALUMINUM HOUSINGS cont.

ELECTRIC SWITCH MECHANISM AND ENCLOSURE CODES — YELLOW DOT MAGNETS

Switch Des.	Max.* Proc. Temp. ° F (°C)	Cont.	Set Points	NEMA 4X, Aluminum Polymer Coated				NEMA 4X/7/9, Aluminum Polymer Coated							
				Standard		Heater		Standard		Class I, Div. 1, Group B		Heater		Drain	
				Short	Tall	Short	Tall	Short	Tall	Short	Tall	Short	Tall	Short	Tall
Series A Mercury	550 (288)	SPDT	1	AAQ	AAB	AFQ	AFB	AKQ	AKB	AKS	AKK	APQ	APB	AUQ	AUB
			2	—	ABB	—	AGB	—	ALB	—	ALK	—	AQB	—	AVB
			3	—	ACB	—	AHB	—	AMB	—	AMK	—	ARB	—	AWB
		DPDT	1	ADQ	ADB	AIQ	AIB	ANQ	ANB	ANS	ANK	ASQ	ASB	AXQ	AXB
			2	—	AEB	—	AJB	—	AOB	—	AOK	—	ATB	—	AYB
Series 3 Mercury Beaded Leads	750 (399)	SPDT	1	3AQ	3AB	3FQ	3FB	3KQ	3KB	3KS	3KK	3PQ	3PB	3UQ	3UB
			2	—	3BB	—	3GB	—	3LB	—	3LK	—	3QB	—	3VB
			3	—	3CB	—	3HB	—	3MB	—	3MK	—	3RB	—	3WB
		DPDT	1	3DQ	3DB	3IQ	3IB	3NQ	3NB	3NS	3NK	3SQ	3SB	3XQ	3XB
			2	—	3EB	—	3JB	—	3OB	—	3OK	—	3TB	—	3YB
Series B Snap	250 (121)	SPDT	1	BAQ	BAB	BFQ	BFB	BKQ	BKB	BKS	BKK	BPQ	BPB	BUQ	BUB
			2	—	BBB	—	BGB	—	BLB	—	BLK	—	BQB	—	BVB
			3	—	BCB	—	BHB	—	BMB	—	BMK	—	BRB	—	BWB
		DPDT	1	BDQ	BDB	BIQ	BIB	BNQ	BNB	BNS	BNK	BSQ	BSB	BXQ	BXB
			2	—	BEB	—	BJB	—	BOB	—	BOK	—	BTB	—	BYB
Series C Snap	450 (232)	SPDT	1	CAQ	CAB	CFQ	CFB	CKQ	CKB	CKS	CKK	CPQ	CPB	CUQ	CUB
			2	—	CBB	—	CGB	—	CLB	—	CLK	—	CQB	—	CVB
			3	—	CCB	—	CHB	—	CMB	—	CMK	—	CRB	—	CWB
		DPDT	1	CDQ	CDB	CIQ	CIB	CNQ	CNB	CNS	CNK	CSQ	CSB	CXQ	CXB
			2	—	CEB	—	CJB	—	COB	—	COK	—	CTB	—	CYB
Series D Snap	250 (121)	SPDT	1	DAQ	DAB	DFQ	DFB	DKQ	DKB	DKS	DKK	DPQ	DPB	DUQ	DUB
			2	—	DBB	—	DGB	—	DLB	—	DLK	—	DQB	—	DVB
			3	—	DCB	—	DHB	—	DMB	—	DMK	—	DRB	—	DWB
		DPDT	1	DDQ	DDB	DIQ	DIB	DNQ	DNB	DNS	DNK	DSQ	DSB	DXQ	DXB
			2	—	DEB	—	DJB	—	DOB	—	DOK	—	DTB	—	DYB
Series E Mercury Vibration Res.	550 (288)	SPDT	1	EAQ	EAB	EFQ	EFB	EKQ	EKB	EKS	EKK	EPQ	EPB	EUQ	EUB
			2	—	EBB	—	EGB	—	ELB	—	ELK	—	EQB	—	EVB
			3	—	ECB	—	EHB	—	EMB	—	EMK	—	ERB	—	EWB
		DPDT	1	EDQ	EDB	EIQ	EIB	ENQ	ENB	ENS	ENK	ESQ	ESB	EXQ	EXB
			2	—	EEB	—	EJB	—	EOB	—	EOK	—	ETB	—	EYB
Series 2 Mercury Beaded Leads Vib. Res.	750 (399)	SPDT	1	2AQ	2AB	2FQ	2FB	2KQ	2KB	2KS	2KK	2PQ	2PB	2UQ	2UB
			2	—	2BB	—	2GB	—	2LB	—	2LK	—	2QB	—	2VB
			3	—	2CB	—	2HB	—	2MB	—	2MK	—	2RB	—	2WB
		DPDT	1	2DQ	2DB	2IQ	2IB	2NQ	2NB	2NS	2NK	2SQ	2SB	2XQ	2XB
			2	—	2EB	—	2JB	—	2OB	—	2OK	—	2TB	—	2YB
Series F Snap HerM. Sealed	750 (399)	SPDT	1	FAQ	FAB	—	—	FKQ	FKB	FKS	FKK	—	—	—	—
			2	—	FBB	—	—	—	FLB	—	FLK	—	—	—	—
		DPDT	1	FDQ	FDB	—	—	FNQ	FNB	FNS	FNK	—	—	—	—
			2	—	FEB	—	—	—	FOB	—	FOK	—	—	—	—
Series N Mercury	550 (288)	SPDT	3	—	NCB	—	NHB	—	NMB	—	NMK	—	NRB	—	NWB
		DPDT	3	—	NEB	—	NJB	—	NKB	—	NKK	—	NLB	—	NNB
Series O Snap	450 (232)	SPDT	3	—	OCB	—	—	—	OMB	—	OMK	—	—	—	OWB
		DPDT	3	—	OEB	—	—	—	OKB	—	OKK	—	—	—	ONB
Series Q Snap	250 (121)	SPDT	3	—	QCB	—	QHB	—	QMB	—	QMK	—	QRB	—	QWB
		DPDT	3	—	QEB	—	QJB	—	QKB	—	QKK	—	QLB	—	QNB
Series S Snap AC	550 (288)	SPDT	1	—	SAB	—	—	—	SKB	—	SKK	—	—	—	—
		DPDT	1	—	SDB	—	—	—	SLB	—	SLK	—	—	—	—
Series S Snap DC	400 (204)	SPDT	1	—	SBB	—	—	—	SNB	—	SNK	—	—	—	—
		DPDT	1	—	SEB	—	—	—	SOB	—	SOK	—	—	—	—
Series T Mercury	500 (260)	SPDT	3	—	TCB	—	TXB	—	TMB	—	TMK	—	TRB	—	TWB
		DPDT	3	—	TYB	—	TJB	—	TKB	—	TKK	—	TLB	—	TNB

* Process temperature based on +100° F (+38°C) ambient.

SWITCH MECHANISMS WITH CARBON STEEL OR CAST IRON HOUSINGS

MODEL NUMBER DESCRIPTION

Mechanical level switches are identified by an alphanumeric part numbering system. The last three digits of the part number describe the type of switch mechanism, enclosing cover length and finish, and magnet strength.

Example: **B75-1 B20-AAD**

- **Basic model number** — B75-1
- **Materials of construction** — B20
- **Tank connections** — A
- **Switch mechanism, enclosure and magnet strength** — AD

MAGNET STRENGTH

Switch mechanisms are provided with different strength magnets, as determined by the materials of construction. A red, white, or yellow dot is visible on each magnet. When ordering replacement switch mechanisms, be certain to determine the color dot on the magnet.

CAUTION: *NEVER replace a switch mechanism with a mechanism containing a dot of a different color.*

ELECTRIC SWITCH MECHANISM AND ENCLOSURE CODES — RED DOT MAGNETS

Switch Description	Max.* Process Temp. ° F (° C)	Cont.	Set Points	NEMA 4X Carbon Steel, Polymer Coated				NEMA 4X/7/9 Cast Iron, Polymer Coated						
				Standard		Heater		Standard		Class I Div. 1, Grp. B	Heater		Drain	
				Short	Tall	Short	Tall	Short	Tall		Short	Tall	Short	Tall
Series A Mercury	550 (288)	SPDT	1	AAR	AAD	AFR	AFD	AKR	AKD	AKV	APR	APD	AUR	AUD
			2	—	ABD	—	AGD	—	ALD	ALV	—	AQD	—	AVD
			3	—	ACD	—	AHD	—	AMD	AMV	—	ARD	—	AWD
		DPDT	1	ADR	ADD	AIR	AID	ANR	AND	ANV	ASR	ASD	AXR	AXD
			2	—	AED	—	AJD	—	AOD	AOV	—	ATD	—	AYD
Series B Snap	250 (121)	SPDT	1	BAR	BAD	BFR	BFD	BKR	BKD	BKV	BPR	BPD	BUR	BUD
			2	—	BBD	—	BGD	—	BLD	BLV	—	BQD	—	BVD
			3	—	BCD	—	BHD	—	BMD	BMV	—	BRD	—	BWD
		DPDT	1	BDR	BDD	BIR	BID	BNR	BND	BNV	BSR	BSD	BXR	BXD
			2	—	BED	—	BJD	—	BOD	BOV	—	BTD	—	BYD
Series C Snap	450 (232)	SPDT	1	CAR	CAD	CFG	CFH	CKR	CKD	CKV	—	CPD	CUR	CUD
			2	—	CBD	—	CGH	—	CLD	CLV	—	CQD	—	CVD
			3	—	CCD	—	CHH	—	CMD	CMV	—	CRD	—	CWD
		DPDT	1	CDR	CDD	CIG	CIH	CNR	CND	CNV	—	CSD	CXR	CXD
			2	—	CED	—	CJH	—	COD	COV	—	CTD	—	CYD
Series E Mercury Vibration Resistant	550 (288)	SPDT	1	EAR	EAD	EFR	EFD	EKR	EKD	EKV	EPR	EPD	EUR	EUD
			2	—	EBD	—	EGD	—	ELD	ELV	—	EQD	—	EVD
			3	—	ECD	—	EHD	—	EMD	EMV	—	ERD	—	EWD
		DPDT	1	EDR	EDD	EIR	EID	ENR	END	ENV	ESR	ESD	EXR	EXD
			2	—	EED	—	EJD	—	EOD	EOV	—	ETD	—	EYD
Series F Snap Hermetically Sealed	750 (399)	SPDT	1	FAR	FAD	—	—	FKR	FKD	FKV	—	—	—	—
			2	—	FBD	—	—	—	FLD	FLV	—	—	—	—
		DPDT	1	FDR	FDD	—	—	FNR	FND	FNV	—	—	—	—
			2	—	FED	—	—	—	FOD	FOV	—	—	—	—

* Process temperature based on +100° F (+38°C) ambient.

ELECTRIC SWITCH MECHANISM AND ENCLOSURE CODES — WHITE DOT MAGNETS

Switch Description	Max.* Process Temp. ° F (° C)	Cont.	Set Points	NEMA 4X Carbon Steel, Polymer Coated				NEMA 4X/7/9 Cast Iron, Polymer Coated						
				Standard		Heater		Standard		Class I Div. 1, Grp. B	Heater		Drain	
				Short	Tall	Short	Tall	Short	Tall		Short	Tall	Short	Tall
Series 2 Mercury Beaded Leads Vibration Resistant	750 (399)	SPDT	1	2AR	2AD	2FR	2FD	2KR	2KD	2KV	2PR	2PD	—	2UD
			2	—	2BD	—	2GD	—	2LD	2LV	—	2QD	—	2VD
			3	—	2CD	—	2HD	—	2MD	2MV	—	2RD	—	2WD
		DPDT	1	2DR	2DD	2IR	2ID	2NR	2ND	2NV	2SR	2SD	—	2XD
			2	—	2ED	—	2JD	—	2OD	2OV	—	2TD	—	2YD
Series 3 Mercury Beaded Leads	750 (399)	SPDT	1	3AR	3AD	3FR	3FD	3KR	3KD	3KV	3PR	3PD	—	3UD
			2	—	3BD	—	3GD	—	3LD	3LV	—	3QD	—	3VD
			3	—	3CD	—	3HD	—	3MD	3MV	—	3RD	—	3WD
		DPDT	1	3DR	3DD	3IR	3ID	3NR	3ND	3NV	3SR	3SD	—	3XD
			2	—	3ED	—	3JD	—	3OD	3OV	—	3TD	—	3YD

* Process temperature based on +100° F (+38°C) ambient.

ELECTRIC SWITCH MECHANISM AND ENCLOSURE CODES — YELLOW DOT MAGNETS

Switch Description	Max.* Process Temp. °F (°C)	Cont.	Set Points	NEMA 4X Carbon Steel, Polymer Coated				NEMA 4X/7/9 Cast Iron, Polymer Coated						
				Standard		Heater		Standard		Class I Div. 1, Grp. B	Heater		Drain	
				Short	Tall	Short	Tall	Short	Tall		Short	Tall	Short	Tall
Series A Mercury	550 (288)	SPDT	1	AAY	AAM	AFY	AFM	AKY	AKM	AKW	APY	APM	AUY	AUM
			2	—	ABM	—	AGM	—	ALM	ALW	—	AQM	—	AVM
			3	—	ACM	—	AHM	—	AMM	AMW	—	ARM	—	AWM
		DPDT	1	ADY	ADM	AIY	AIM	ANY	ANM	ANW	ASY	ASM	AXY	AXM
			2	—	AEM	—	AJM	—	AOM	AOW	—	ATM	—	AYM
Series 3 Mercury Beaded Leads	750 (399)	SPDT	1	3AY	3AM	3FY	3FM	3KY	3KM	3KW	3PY	3PM	—	3UM
			2	—	3BM	—	3GM	—	3LM	3LW	—	3QM	—	3VM
			3	—	3CM	—	3HM	—	3MM	3MW	—	3RM	—	3WM
		DPDT	1	3DY	3DM	3IY	3IM	3NY	3NM	3NW	3SY	3SM	—	3XM
			2	—	3EM	—	3JM	—	3OM	3OW	—	3TM	—	3YM
Series B Snap	250 (121)	SPDT	1	BAY	BAM	BFY	BFM	BKY	BKM	BKW	BPY	BPM	BUY	BUM
			2	—	BBM	—	BGM	—	BLM	BLW	—	BQM	—	BVM
			3	—	BCM	—	BHM	—	BMM	BMW	—	BRM	—	BWM
		DPDT	1	BDY	BDM	BIY	BIM	BNY	BNM	BNW	BSY	BSM	BXY	BXM
			2	—	BEM	—	BJM	—	BOM	BOW	—	BTM	—	BYM
Series C Snap	450 (232)	SPDT	1	CAY	CAM	CFE	CFF	CKY	CKM	CKW	CPY	CPM	CUY	CUM
			2	—	CBM	—	CGF	—	CLM	CLW	—	CQM	—	CVM
			3	—	CCM	—	CHF	—	CMM	CMW	—	CRM	—	CWM
		DPDT	1	CDY	CDM	CIE	CIF	CNY	CNM	CNW	CSY	CSM	CXY	CXM
			2	—	CEM	—	CJF	—	COM	COW	—	CTM	—	CYM
Series D Snap	250 (121)	SPDT	1	DAY	DAM	DFY	DFM	DKY	DKM	DKW	DPY	DPM	DUY	DUM
			2	—	DBM	—	DGM	—	DLM	DLW	—	DQM	—	DVM
			3	—	DCM	—	DHM	—	DMM	DMW	—	DRM	—	DWM
		DPDT	1	DDY	DDM	DIY	DIM	DNY	DNM	DNW	DSY	DSM	DXY	DXM
			2	—	DEM	—	DJM	—	DOM	DOW	—	DTM	—	DYM
Series E Mercury Vibration Resistant	550 (288)	SPDT	1	EAY	EAM	EFY	EFM	EKY	EKM	EKW	EPY	EPM	EUY	EUM
			2	—	EBM	—	EGM	—	ELM	ELW	—	EQM	—	EVM
			3	—	ECM	—	EHM	—	EMM	EMW	—	ERM	—	EWM
		DPDT	1	EDY	EDM	EIY	EIM	ENY	ENM	ENW	ESY	ESM	EXY	EXM
			2	—	EEM	—	EJM	—	EOM	EOW	—	ETM	—	EYM
Series 2 Mercury Beaded Leads Vibration Resistant	750 (399)	SPDT	1	2AY	2AM	2FY	2FM	2KY	2KM	2KW	2PY	2PM	—	2UM
			2	—	2BM	—	2GM	—	2LM	2LW	—	2QM	—	2VM
			3	—	2CM	—	2HM	—	2MM	2MW	—	2RM	—	2WM
		DPDT	1	2DY	2DM	2IY	2IM	2NY	2NM	2NW	2SY	2SM	—	2XM
			2	—	2EM	—	2JM	—	2OM	2OW	—	2TM	—	2YM
Series F Snap Hermetically Sealed	750 (399)	SPDT	1	FAY	FAM	—	—	FKY	FKM	FKW	—	—	—	—
			2	—	FBM	—	—	—	FLM	FLW	—	—	—	—
		DPDT	1	FDY	FDM	—	—	FNY	FNM	FNW	—	—	—	—
			2	—	FEM	—	—	—	FOM	FOW	—	—	—	—
Series L Mercury	1000 (538)	SPDT	1	—	LAM	—	—	—	LKM	LKW	—	—	—	—
		DPDT	1	—	LDM	—	—	—	LNM	LNW	—	—	—	—
Series L Mercury Vib. Res.	1000 (538)	SPDT	1	—	LBM	—	—	—	LLM	LLW	—	—	—	—
		DPDT	1	—	LEM	—	—	—	LOM	LOW	—	—	—	—
Series N Mercury	550 (288)	SPDT	3	—	NCM	—	NHM	—	NMM	NMI	—	NRM	—	NWM
		DPDT	3	—	NEM	—	NJM	—	NKM	NKI	—	NLM	—	NNM
Series O Snap	450 (232)	SPDT	3	—	OCM	—	—	—	OMM	OMI	—	—	—	OWM
		DPDT	3	—	OEM	—	—	—	OKM	OKI	—	—	—	ONM
Series Q Snap	250 (121)	SPDT	3	—	QCM	—	QHM	—	QMM	QMI	—	QRM	—	QWM
		DPDT	3	—	QEM	—	QJM	—	QKM	QKI	—	QLM	—	QNM
Series S Snap AC	550 (288)	SPDT	1	—	SAM	—	—	—	SKM	SKW	—	—	—	—
		DPDT	1	—	SDM	—	—	—	SLM	SLW	—	—	—	—
Series S Snap DC	400 (204)	SPDT	1	—	SBM	—	—	—	SNM	SNW	—	—	—	—
		DPDT	1	—	SEM	—	—	—	SOM	SOW	—	—	—	—
Series T Mercury	500 (260)	SPDT	3	—	TCM	—	THM	—	TMM	TMI	—	TRM	—	TWM
		DPDT	3	—	TEM	—	TJM	—	TKM	TKI	—	TLM	—	TNM

* Process temperature based on +100°F (+38°C) ambient.

GENERAL INSTRUCTIONS

OPERATING PRINCIPLE

Diagrams A and B illustrate the simple, foolproof operating principle. Switching action is obtained through the use of a magnetic sleeve ④ actuated by a float ③, displacer or flow sensing device and a switching mechanism ②. These two basic component assemblies are separated by a non-magnetic, pressure tight enclosing tube ⑤. A switch mechanism ② and magnet ① are assembled to a swinging arm which operates on precision stainless steel pivot sockets.

OPERATING CYCLE

At normal operating level of a liquid in a storage vessel, (diagram A), the float moves the magnetic sleeve upward in the enclosing tube and into the field of the switch mechanism magnet. As a result, the magnet is drawn in tightly to the enclosing tube causing the switch to tilt, making or "breaking" the electrical circuit. As the liquid level recedes, the float pulls the magnetic sleeve downward until, at a predetermined "Low Level," (diagram B) the switch magnet releases and is drawn outward, away from the enclosing tube by a tension spring. This in turn tilts the switch in an opposite direction, thus reversing switch action.

OPERATING CYCLE cont.

When the liquid level returns to normal, the float once again moves the magnetic sleeve up the enclosing tube, causing the switch to assume its original position.

Switch mechanisms may include a single switch or multiple switches, depending on operational requirements and switching action desired.

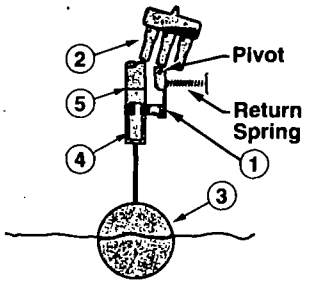

Rising Level
Diagram A

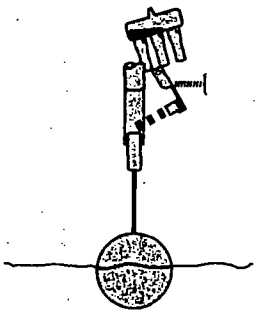

Falling Level
Diagram B

INSTALLATION

REMOVING SWITCH MECHANISM

CAUTION: *Before attempting to remove a switch mechanism, be certain to pull disconnect switch or otherwise assure that electrical circuit through control is de-energized.*

1. Disconnect wiring from supply side of terminal block on switch mechanism. Note and record lead wire terminal locations.
2. Loosen screw in split mounting clamp until mechanism slides freely on enclosing tube, refer to Figure 1.
3. Remove small round head screw securing lower switch mechanism to baffle plate, refer to Figure 7 on page 6.
4. Carefully lift off switch mechanism and place on clean surface, free of metal particles which may be attracted to switch magnet.

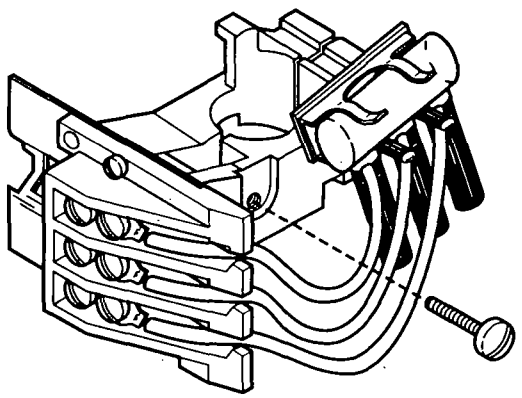

Figure 1

REPLACING MERCURY SWITCH
Series A, L, M, N and 3

1. Disconnect the control from power supply.
2. Disconnect switch leads from terminal block A, noting terminal post numbers marked on switch mechanism.

NOTE: Before removing existing mercury switch, loosen cement holding switch by gently prying between switch clips and glass tube.

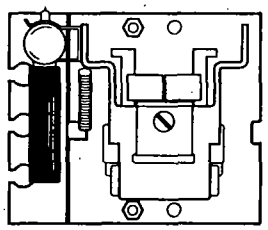

Figure 2

3. Remove mercury switch from clips B, Figure 3.
4. Replace new mercury switch into clips B, making certain that switch legs are positioned to help prevent fouling of leads.
5. Glue switch to clips B, using a cement such as DuPont Duco, Goodyear Pliobond®, shellac or equivalent, refer to Figures 2 and 3.
6. Connect switch leads to terminal block A on identical post positions as those in the original assembly, refer to Figure 3.

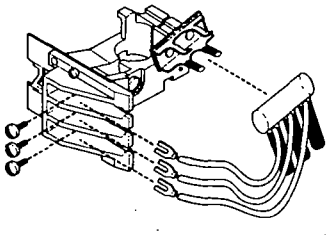

Figure 3

REPLACING MERCURY SWITCH cont.
Series A, L, M, N and 3 cont.

7. Check to be certain that the switch leads do NOT cross over or under one another.
8. Swing magnet assembly in and out by hand, checking carefully for any sign of binding. Assembly should require minimum force to move through its full swing. Contact factory if binding is observed.

NOTE: DPDT mechanisms have "left hand" and "right hand" switches, refer to Figure 4 as viewed facing terminal block of mechanism. Follow all steps for switch replacement and adjustment described above. Reconnect power supply, and test switch action by varying liquid level in the vessel or by "blowing-down" float chamber.

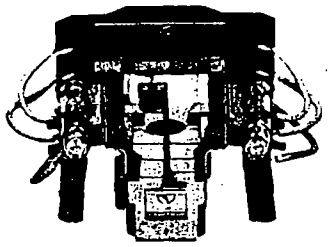

Figure 4

Series E, T and 2
Follow instructions for Series A except:

1. Replace new mercury switch into clips making certain that a space of ⅜" exists from edge of clip to point where lead wires attach to glass tube. Lead wires should project downward at 90% angle from horizontal plane refer to Figure 5.

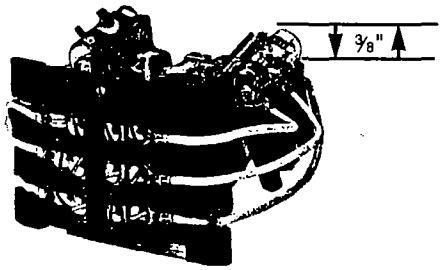

Figure 5

2. Glue switch to clips using a cement such as DuPont Duco, Goodyear Pliobond®, Shellac or equivalent, refer to Figure 2.
3. Connect switch leads to terminal block A on identical post positions as those in the original assembly.

NOTE: Check to be certain that switch glass tube is not resting on the upper switch lead, and that switch leads drape loosely when switch magnet is in the "swing" position. Glass tube may be slid forward in clips toward terminal block to correct such conditions.

4. Check new mercury switch carefully to see that it makes and breaks circuit properly.
   a. Slowly swing switch magnet through its operating angle. Mercury must make and break contact between electrodes before magnet comes to its IN *stop or OUT stop.*
   b. If action is incorrect, contact factory for replacement.

REPLACING MERCURY SWITCH cont.
Series E, T and 2 cont.

NOT E: A properly adjusted mercury switch will have equal overtravel tilt in both directions after switch actuation.

5. DPDT switch mechanisms have two mercury switches carried by the pivoted magnet, refer to Figure 4. Follow all steps 1 through 4.

   Reconnect power supply and test switch action by varying liquid level in the vessel or by "blowing down" float chamber.

REPLACING DRY CONTACT SWITCHES
Series B, C, D, F, O, Q and S

***CAUTION:** Before attempting to work on a switch mechanism, be certain to pull disconnect switch or otherwise assure that electrical circuit through control is de-energized.*

1. Disconnect switch leads from terminal block. Note and record terminal connections of switch to be replaced.
2. Remove two mounting screws holding existing switch, refer to Figure 6.
3. Remove existing switch and install replacement switch in the same position, tightening mounting screws securely.

NOTE: For proper operation of the replacement switch, it must actuate in the middle portion of the pivoted magnet's swing.

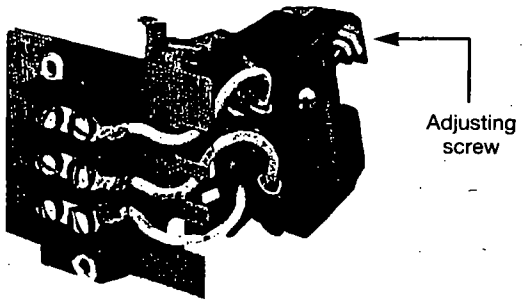

Figure 6

4. Check switch action and adjust as follows:
   a. Slowly rotate the pivoted magnet by hand, back and forth through its angle of swing, listening closely for the actuating click of the switch in each direction.
   b. Check to see if there is equal overtravel of magnet in its swing after the switch click in either direction.
   c. If switch actuation is not correct, change adjustment of actuating screw using a 1/16" hexagon key wrench, refer to Figure 6.

NOTE: If a single switch is being replaced on a DPDT mechanism, lever of second switch must be depressed and held to allow for the audible adjustment of new switch, as described above.

   d. With new switch in adjustment, release lever of second switch and perform fine-tuning of both switches to provide simultaneous actuation (clicks).

5. Reconnect power supply and test switch action by varying liquid level in the vessel or by "blowing down" float chamber.

ADJUSTMENT

VIBRATION APPLICATION
Series E, T and 2

Level controls are frequently used on applications where vibration is encountered, such as on scrubbers in oil field installations. Switch mechanisms may require repositioning to prevent sloshing of mercury in switches. This position is usually best at right angles to the direction of vibration. The direction of vibration may be determined by the arrangement of connections to the vessel or the vessel's mounting method. Accordingly, the vibration will tend to be in one direction only.

Upon determining the vibration direction, switch mechanism(s) may be rotated from an incorrect position (as shown in Figure 7 at right which is looking at a control from above), to a correct position as follows:

***CAUTION:** Before attempting to remove a switch mechanism, be certain to pull disconnect switch or otherwise assure that electrical circuit through control is de-energized.*

1. Disconnect control from power supply.
2. Loosen screw in split mounting clamp until mechanism slides freely on enclosing tube, refer to Figure 1 on page 6.
3. Rotate entire mechanism and bottom baffle plate together to a correct position.

***CAUTION:** Be certain power supply wires retain some slack at new position. Do not pull wires taut.*

NOTE: Amount of rotation will vary with each installation and may not be as much as shown in illustration.

4. Check action of mercury in switch at new position. When mercury sloshes from side to side in glass tube, instead of end to end, correct position has been attained.
5. Tighten clamp screw on switch mechanism.
6. Reconnect power supply, and test switch action under operating conditions.

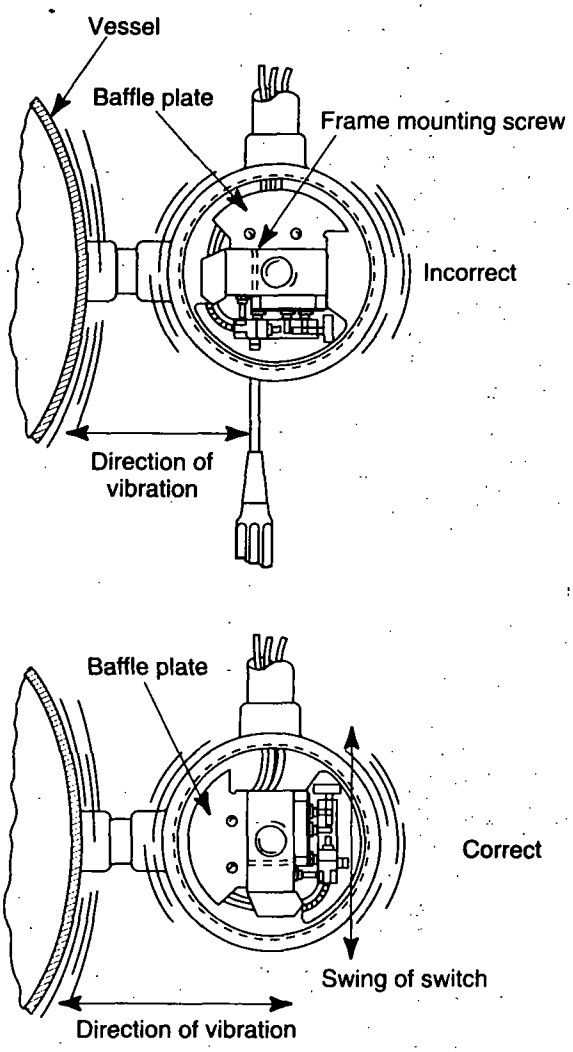

Figure 7

WIRING DIAGRAMS

Circuits shown are for direct acting level switches and are reversed in side mounting float-in-tank models, which utilize a reversing float pivot.

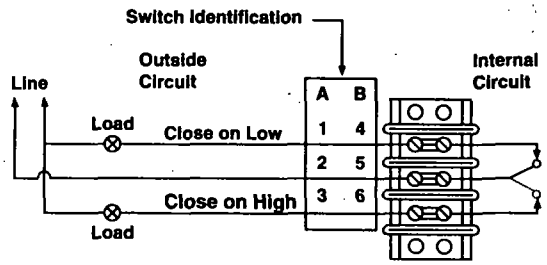

SPDT

Figure 8

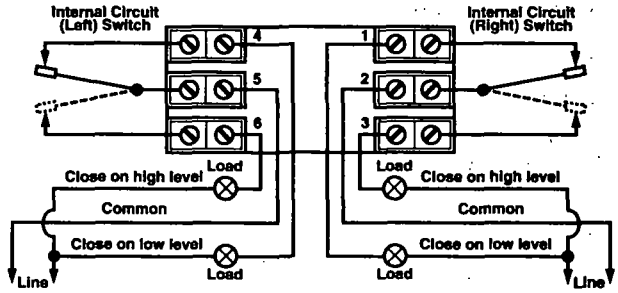

DPDT

Figure 7

BASIC ELECTRICAL RATINGS

Voltage	Switch Series and Non-Inductive Ampere Rating															
	A	B	C	D	E	F	L		N	O	Q	S		T	2	3
							Standard	Vibration Resistant				AC	DC			
120 VAC	13.00	15.00	15.00	10.00	4.00	0.25	13.00	4.00	13.00	15.00	15.00	15.00	10.00	4.00	4.00	13.00
240 VAC	6.50	15.00	15.00	—	2.00	—	6.50	2.00	6.50	15.00	15.00	15.00	—	2.00	2.00	6.50
24 VDC	10.00	6.00	10.00	10.00	—	4.00	—	—	3.70	—	6.00	—	—	—	—	10.00
120 VDC	10.00	0.50	1.00	10.00	4.00	0.30	10.00	4.00	10.00	1.00	0.50	1.00	10.00	4.00	4.00	10.00
240 VDC	5.00	0.25	0.50	3.00	2.00	—	5.00	2.00	5.00	0.50	0.25	0.50	3.00	2.00	2.00	5.00

MANUAL RESET SWITCH MECHANISMS

MODEL NUMBER DESCRIPTION

Mechanical level switches are identified by an alphanumeric part numbering system. The last three digits of the part number describe the type of switch mechanism, enclosing cover length and finish, and magnet strength.

Example: **B75-1 B20-MAD**

Basic model number

Materials of construction

Tank connections

Switch mechanism, enclosure and magnet strength

MAGNET STRENGTH

Switch mechanisms are provided with different strength magnets, as determined by the materials of construction. A red or yellow dot is visible on each magnet. When ordering replacement switch mechanisms, be certain to determine the color dot on the magnet.

***CAUTION:** NEVER replace a switch mechanism with a mechanism containing a dot of a different color.*

ELECTRIC SWITCH MECHANISM AND ENCLOSURE CODES — RED DOT MAGNETS

Switch Description	Max. Process Temp. ° F (° C)	Contacts	Set Points	NEMA 4X Carbon Steel, Polymer Coated	
				Tall Cover	Short Cover
Series M Mercury	550 (288)	SPDT	1	MAD	MAR
			2	MBD	—
			3	MCD	—
		DPDT	1	MDD	MAG
			2	MED	—

Consult factory for additional manual reset switch options.

ELECTRIC SWITCH MECHANISM AND ENCLOSURE CODES — YELLOW DOT MAGNETS

Switch Description	Max. Process Temp. ° F (° C)	Contacts	Set Points	NEMA 4X Carbon Steel, Polymer Coated	
				Tall Cover	Short Cover
Series M Mercury	550 (288)	SPDT	1	MAM	MAY
			2	MBM	—
			3	MCM	—
		DPDT	1	MDM	MDY
			2	MEM	—

Consult factory for additional manual reset switch options.

MANUAL RESET REPLACEMENT SWITCH MECHANISMS

SWITCH MECHANISM SELECTION

When replacing an electric switch mechanism in an enclosure the following guidelines apply: For the lowest mechanism select the "B" switch, for the next mechanism up select the "A" switch, and for the third mechanism the selection is the "B" switch.

MAGNET STRENGTH

Switch mechanisms are provided with different strength magnets as determined by the materials of construction. A red or yellow dot is visible on each magnet. When ordering replacement switch mechanisms, be certain to determine the color dot on the magnet.

***CAUTION:** NEVER replace a switch mechanism with a mechanism containing a dot of a different color.*

Switch Series	Contacts	Replacement Switch Mechanism With Switch (ES)		Replacement Switch Only	
		Yellow Dot Magnet	Red Dot Magnet	Left Hand	Right Hand
M	SPDT	A Switch 89-7401-009	A Switch 89-7401-003	None	89-7101-013
		B Switch 89-7401-012	B Switch 89-7401-006		
	DPDT	89-7401-055	89-7401-018	89-7101-014	89-7101-013

MANUAL RESET ASSEMBLY FIELD INSTALLATION INSTRUCTIONS

Part No. 89-6507-001, on Boiler Controls Equipped with Series A Switch Mechanism

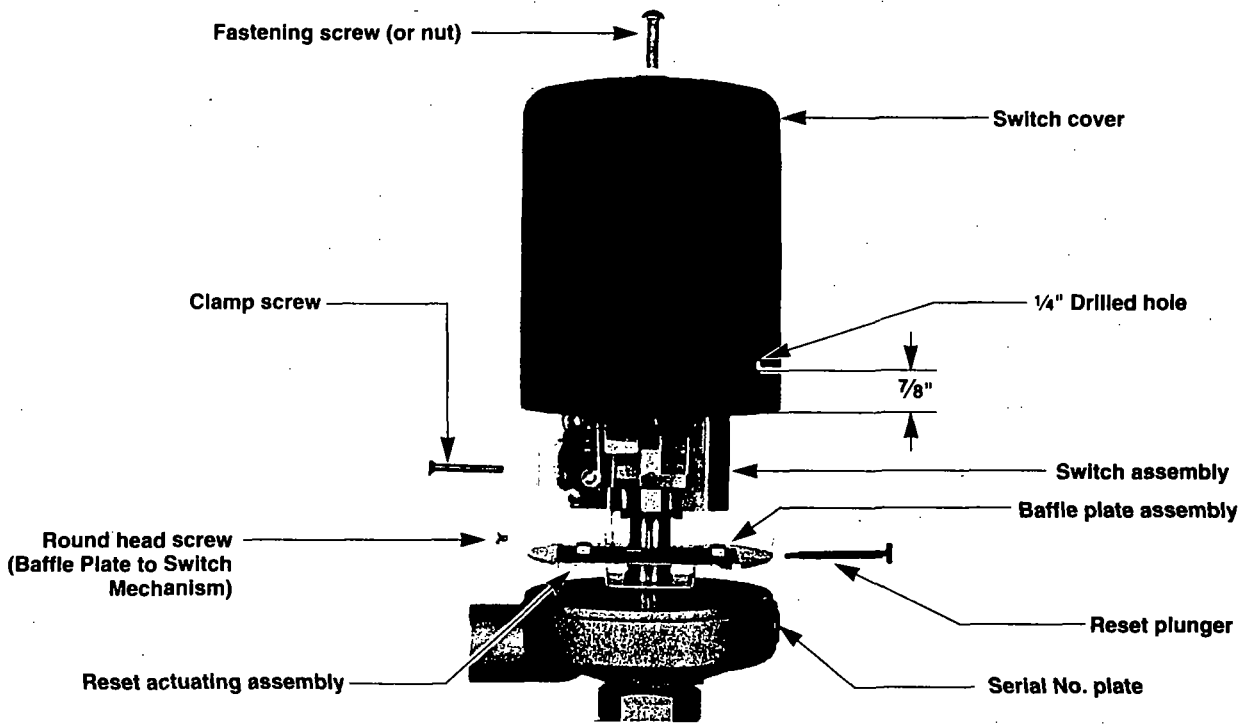

Figure 10

CAUTION: Before attempting work on any level control, be certain to pull disconnect switch or otherwise assure that electrical circuit through control is de-energized.

1. Remove switch cover by loosening fastening screw (or nut).
2. Drill a ¼" diameter hole in cover at 7/8" up from bottom edge, as shown.
3. Disconnect wiring from supply side of terminal strip on switch mechanisms.

NOTE: Measure location of switch mechanism(s) on enclosing tube and record for reference use during reassembly. (Measure from top of enclosing tube to top of mounting clamp on switch mechanism(s)).

4. Loosen screw in split mounting clamp of switch mechanism(s) until assembly moves freely on enclosing tube.
5. Remove small round head screw securing baffle plate to switch mechanism.
6. Carefully lift off switch mechanism(s) and baffle plate. Place on a clean surface, free of any metal particles that may be attracted onto the magnet(s).
7. Install a new baffle plate assembly, with manual reset mechanism, and carefully replace switch mechanism(s) in reverse of steps 3 through 6 above.
8. Replace switch cover, lining up drilled hole with hole in reset actuating mechanism. **Do not** tighten cover fastening screw (or nut) at this point.
9. Thread reset plunger into actuating mechanism through drilled hole in switch cover and thumb tighten securely. Reposition switch cover as necessary to be certain it does not bind reset plunger.
10. Tighten fastening screw (or nut) on switch cover and check action of plunger to see that it moves freely.
11. Blow down float chamber to test operation of manual reset mechanism.

NOTE: Boiler level controls should **not** start firing equipment when boiler water level has returned to normal (safe point) until reset plunger has been manually depressed. If control starts firing equipment, magnet stop arm on switch mechanism must be bent out on switch frame 1/32" allowing magnet to swing further from enclosing tube arm and into the field of the reset magnet.

CAUTION: If it is necessary to reposition manual reset plunger, entire switch mechanism(s) must be loosened and rotated on enclosing tube to desired position (refer to step 4). **Do not** attempt to position plunger by twisting switch cover or damage to switch mechanism(s) will result.

SWITCH RATINGS

SWITCH SERIES	SWITCH TYPE	PROCESS TEMP. ° F (° C) ①	LOAD	RATING					
				Volts AC			Volts DC		
				120	240	480	24	120	240
A	Mercury	550 (288)	Non-Inductive Amp	13.00	6.50	3.70	10.00	10.00	5.00
			Inductive Amp	9.80	4.90	2.50	—	5.20	2.60
3		750 (399)	Horsepower	1/2	1/2	1/2	—	1/2	1/2
B	Snap	250 (121)	Non-Inductive Amp	15.00	15.00	15.00	6.00	0.50	0.25
			Inductive Amp	15.00	15.00	15.00	5.00	0.05	0.03
			Horsepower	1/8	1/4	—	—	—	—
C	Snap	450 (232)	Non-Inductive Amp	15.00	15.00	15.00	10.00	1.00	0.50
			Inductive Amp	15.00	15.00	15.00	5.00	0.50	—
			Horsepower	1/10	1/6	—	—	—	—
D	Snap	250 (121)	Non-Inductive Amp	10.00	—	—	10.00	10.00	1.50 min. 3.00 max.
			Inductive Amp	3.80	—	—	—	2.20	—
			Horsepower	1/8	—	—	—	1/8	—
E	Vibration Resistant Mercury	550 (288)	Non-Inductive Amp	4.00	2.00	1.00	—	4.00	2.00
			Inductive Amp	3.80	1.90	—	—	2.40	1.20
2		750 (399)	Horsepower	1/8	1/8	—	—	1/6	1/6
F (Followed by Letter)	Hermetic	750 (399)	Resistive Amp	2.50	—	—	4.00 ②	0.30	—
			Inductive Amp	2.50	—	—	2.00 ②	0.10	—
F (Followed by No.)	Hermetic	250 (121)	Resistive Amp	1.00	—	—	15.00 ②	—	—
			Inductive Amp	1.00	—	—	10.00 ②	—	—
LA LD LK LN	Mercury	1000 (538)	Non-Inductive Amp	13.00	6.50	3.70	—	10.00	5.00
			Inductive Amp	9.80	4.90	2.50	—	5.20	2.60
			Horsepower	1/2	1/2	1/2	—	1/2	1/2
LB LE LL LO	Mercury Vibration Resistant	1000 (538)	Non-Inductive Amp	4.00	2.00	1.00	—	4.00	2.00
			Inductive Amp	3.80	1.90	—	—	2.40	1.20
			Horsepower	1/8	1/8	—	—	1/6	1/6
M	Mercury Manual Reset	550 (288)	Non-Inductive Amp	13.00	6.50	3.70	10.00	10.00	5.00
			Inductive Amp	9.80	4.90	2.50	—	5.20	2.60
			Horsepower	1/2	1/2	1/2	—	1/2	1/2
N	Mercury	550 (288)	Non-Inductive Amp	13.00	6.50	3.70	—	10.00	5.00
			Inductive Amp	9.80	4.90	2.50	—	5.20	2.60
			Horsepower	1/2	1/2	1/2	—	1/2	1/2
O	Snap	450 (232)	Non-Inductive Amp	15.00	15.00	15.00	—	1.00	0.50
			Inductive Amp	15.00	15.00	15.00	—	—	—
			Horsepower	1/10	1/6	—	—	—	—
Q	Snap	250 (121)	Non-Inductive Amp	15.00	15.00	15.00	6.00	0.50	0.25
			Inductive Amp	15.00	15.00	15.00	5.00	0.05	0.30
			Horsepower	1/8	1/4	—	—	—	—
SA SD SK SN	Snap	550 (288)	Non-Inductive Amp	15.00	15.00	15.00	—	1.00	0.50
			Inductive Amp	15.00	15.00	15.00	—	0.50	—
			Horsepower	1/10	1/6	—	—	—	—
SB SE SL SO	Snap	250 (121)	Non-Inductive Amp	10.00	—	—	10.00	10.00	1.50 min. 3.00 max.
			Inductive Amp	3.80	—	—	—	2.20	—
			Horsepower	1/8	—	—	—	1/8	—
T	Mercury	500 (260)	Non-Inductive Amp	4.00	2.00	1.00	—	4.00	2.00
			Inductive Amp	3.80	1.90	—	—	2.40	1.20
			Horsepower	1/8	1/8	—	—	1/6	1/6
V	Hermetic (Gold Contacts)	500 (260)	Resistive Amp	—	—	—	1.00 ②	—	—
			Inductive Amp	—	—	—	0.25 ②	—	—
W	Hermetic (Silver Contacts)	450 (232)	Resistive Amp	1.00	1.00	—	3.00 ③	0.50	—
			Inductive Amp	—	0.80	—	—	—	—
X	Hermetic (Gold Contacts)	450 (232)	Resistive Amp	0.50	0.50	—	0.50	0.50	0.50
			Inductive Amp	0.15	—	—	—	—	—

① Process temperatures are based on +100° F (+38° C) ambient.
② 28 VDC
③ 30 VDC

REPLACEMENT SWITCH MECHANISMS

SWITCH MECHANISM SELECTION

When replacing an electric switch mechanism in an enclosure the following guidelines apply: For the lowest mechanism select the "B" switch, for the next mechanism up select the "A" switch, and for the third mechanism the selection is the "B" switch.

MAGNET STRENGTH

Switch mechanisms are provided with different strength magnets as determined by the materials of construction. A red, white or yellow dot is visible on each magnet. When ordering replacement switch mechanisms, be certain to determine the color dot on the magnet.

CAUTION: *NEVER replace a switch mechanism with a mechanism containing a dot of a different color.*

Switch Series	Contacts	Replacement Switch Mechanism With Switch (ES)			Replacement Switch Only	
		Yellow Dot Magnet	Red Dot Magnet	White Dot Magnet	Left Hand	Right Hand
A, M, & N	SPDT	A Switch 89-7401-009	A Switch 89-7401-003	None	None	89-7101-013
		B Switch 89-7401-012	B Switch 89-7401-006			
	DPDT	89-7401-055	89-7401-018		89-7101-014	89-7101-013
B & Q	SPDT	A Switch 89-7401-103	A Switch 89-7401-101	None	None	89-7101-020
		B Switch 89-7401-104	B Switch 89-7401-102			
	DPDT	89-7401-122	89-7401-121		89-7101-020	89-7101-020
C & O	SPDT	A Switch 89-7401-109	A Switch 89-7401-107	None	None	89-7101-022
		B Switch 89-7401-110	B Switch 89-7401-108			
	DPDT	89-7401-125	89-7401-124		89-7101-022	89-7101-022
D	SPDT	A Switch 89-7401-105	A Switch None	None	None	89-7101-024
		B Switch 89-7401-106	B Switch None			
	DPDT	89-7401-123	None		89-7101-024	89-7101-024
E & T	SPDT	A Switch 89-7401-063	A Switch 89-7401-073	None	None	89-7101-015
		B Switch 89-7401-068	B Switch 89-7401-078			
	DPDT	89-7401-052	89-7401-046		89-7101-015	89-7101-015
F	SPDT	A Switch 89-7401-096	A Switch 89-7401-094	None	None	89-7101-041
		B Switch 89-7401-095	B Switch 89-7401-093			
	DPDT	89-7401-098	89-7401-097		89-7101-041	89-7101-041
L	SPDT	89-7401-015	None	None	None	89-7101-042
	DPDT	89-7401-024			89-7101-043	
L Vibration Resistant	SPDT	89-7401-155	None	None	None	89-7101-033
	DPDT	89-7401-156			89-7101-044	
S	SPDT	AC 89-7401-126 DC 89-7401-129	None	None	None	AC 89-7101-022 DC 89-7101-024
	DPDT	AC 89-7401-128 DC 89-7401-127			AC...89-7101-022 DC...89-7101-024	AC 89-7101-022 DC 89-7101-024
2	SPDT	A Switch 89-7401-149	None	A Switch 89-7401-151	None	89-7101-033
		B Switch 89-7401-150		B Switch 89-7401-152		
	DPDT	89-7401-154		89-7401-153	89-7101-044	89-7101-033
3	SPDT	A Switch 89-7401-146	None	A Switch 89-7401-157	None	89-7101-042
		B Switch 89-7401-147		B Switch 89-7401-158		
	DPDT	89-7401-148		89-7401-159	89-7101-043	89-7101-042

SWITCH HOUSINGS REPLACEMENT ASSEMBLIES

DESCRIPTION—ALUMINUM HOUSINGS

Standard housing replacement assemblies are designed for applications ranging from general purpose, indoor use, to nonhazardous installations requiring a dust/water/lint, fiber/oil tight enclosure. Refer to Figure 11.

Explosion proof housing replacement assemblies are designed for applications in hazardous atmospheric locations, as classified under types NEMA 7 and 9 of the National Electrical Code.

Housings equipped with submersible bases are suitable for submersion under water, as classified under NEMA type 6 of the code.

ALUMINUM HOUSINGS REPLACEMENT ASSEMBLIES

Description	Replacement Kit Part Number	
	NEMA 4X	NEMA 4X/7/9
Housing Cover 6" (152 mm) and Housing Base, Blue Cover	89-6582-020	89-6582-023
Housing Cover 6" (152 mm) and Housing Base With Drain, Blue Cover	89-6582-026	89-6582-028
Housing Cover 8" (203 mm) and Housing Base, Blue Cover	89-6582-021	89-6582-024
Housing Cover 8" (203 mm) and Housing Base with Drain, Blue Cover	89-6582-027	89-6582-029
Class I, Group B Housing Cover 8" (203 mm) and Housing Base w/o Drain, Blue Cover	—	89-6582-033
Class I, Group B Housing Cover 6" (152 mm) and Housing Base w/o Drain, Blue Cover	—	89-6582-032
Housing with Extension 13" (330 mm) and Housing Base without Drain, Blue Cover	89-6582-022	89-6582-025
Gasket	12-2201-253	
O-Ring	12-2201-116	
Baffle Plate — Series A, B, C, D, E, F, 2 & 3	05-6657-001	

DESCRIPTION—ALUMINUM HOUSINGS cont.

IMPORTANT

When ordering, please specify:

1. Model and serial number of control.
2. Name and part number of replacement kit.

NOTE: Consult your local representative on applications to meet NEMA and other codes not covered in this bulletin.

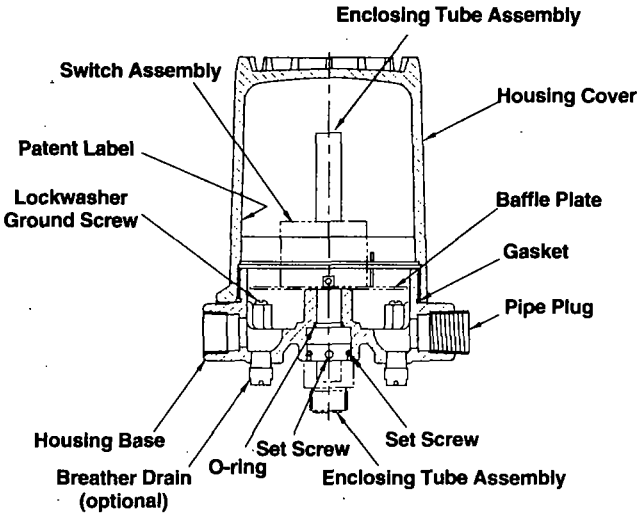

Aluminum Housing Assembly
Figure 11

DESCRIPTION—CAST IRON HOUSINGS

Explosion proof housing replacement assemblies are designed for applications in hazardous atmospheric locations, as classified under types NEMA 7 and 9 of the National Electrical Code. Refer to Figure 12.

Housings equipped with submersible bases are suitable for submersion under water, as classified under NEMA type 6 of the code.

IMPORTANT

When ordering, please specify:

1. Model and serial number of control.
2. Name and part number of replacement kit.

NOTE: Consult your local representative on applications to meet NEMA and other codes not covered in this bulletin.

CAST IRON HOUSINGS REPLACEMENT ASSEMBLIES

Description	Replacement Kit Part No.
Explosion Proof Housing Cover 4" (102 mm) and Housing Base, Blue Cover	89-6582-002
Explosion Proof Housing Cover 4" (102 mm) and Housing Base With Drain, Blue Cover	89-6582-003
Explosion Proof Housing Cover 6" (152 mm) and Housing Base, Blue Cover	89-6582-005
Explosion Proof Housing Cover 6" (152 mm) and Housing Base with Drain, Blue Cover	89-6582-006
Class I, Group B Housing Cover 6" (152 mm) and Housing Base without Drain, Blue Cover	89-6582-008
Explosion Proof Housing Cover with Extension 11" (279 mm) and Housing Base without Drain, Blue Cover	89-6578-001
Gasket	12-2201-249
O-Ring	12-2201-116
Baffle Plate — Series A, B, C, D,E, F, 2 & 3	05-6657-001

SWITCH HOUSINGS REPLACEMENT ASSEMBLIES

DESCRIPTION - CARBON STEEL HOUSINGS

Standard carbon steel housing replacement assemblies are designed for applications ranging from general purpose, indoor use, to nonhazardous installations requiring a dust/water/lint, fiber/oil tight enclosure. Refer to Figure 13.

Manual reset assemblies utilize the same basic componesnts as standard units, but are limited to general purpopse, indoor applications where the unit is not exposed to unusual conditions.

NOTE: Manual reset mechanism requires a hole in the side of the cover to accommodate the reset actuating plunger.

DESCRIPTION - CARBON STEEL HOUSINGS cont

IMPORTANT

When ordering, please specify:

1. Model and serial number of control.
2. Name and part number of replacement kit.

NOTE: Consult your local representative on applications to meet NEMA and other codes not covered in this bulletin.

① National Electrical Manufacturers Association.
② Includes assembly hardware kit 89-6508-001.
③ Includes base assembly hardware.
④ Includes housing base.

CARBON STEEL HOUSINGS REPLACEMENT ASSEMBLIES

Description		NEMA Type ①	Replacement Kit Part Number		
			Black Cover	Gray Cover	Blue Cover
Standard Housing Cover.	Short 4" (102 mm)	NEMA 1 thru 5 & NEMA 12	89-6509-001 ②	89-6523-002	89-6509-003 ②
	Tall 6" (152 mm)		89-6510-001 ②	89-6523-001	89-6510-003 ②
	with Extension 12" (305 mm)		89-6528-001 ④	—	89-6528-003 ④
Manual Reset Housing Cover	Short 4" (102 mm)	NEMA 1 only	89-6511-001 ②	89-6511-002	89-6511-003 ②
	Tall 6" (152 mm)		89-6512-001 ②	89-6512-001	89-6512-003 ②
Housing Base (Standard and Manual Reset)		NEMA 1 thru 5 & NEMA 12	89-6505-001 ③	—	89-6505-003 ③
Cover Assembly Hardware		NEMA 1 thru 5 & NEMA 12	89-6508-001	89-6508-001	89-6508-001
Baffle Plate	Series A, B, C, D E, F, 2, & 3	NEMA 1 thru 5 & NEMA 12	36-5303-001	36-5303-001	36-5303-001

Description		NEMA Type	Replacement Kit Part Number
Transparent Lexan Housing Cover	Tall 6" (152 mm)	NEMA 1 only	89-6522-001 ②

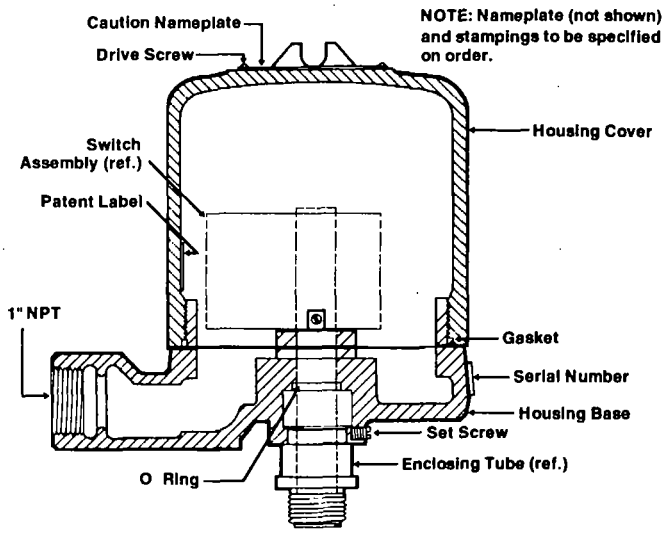

Cast Iron Housing Assembly
Figure 12

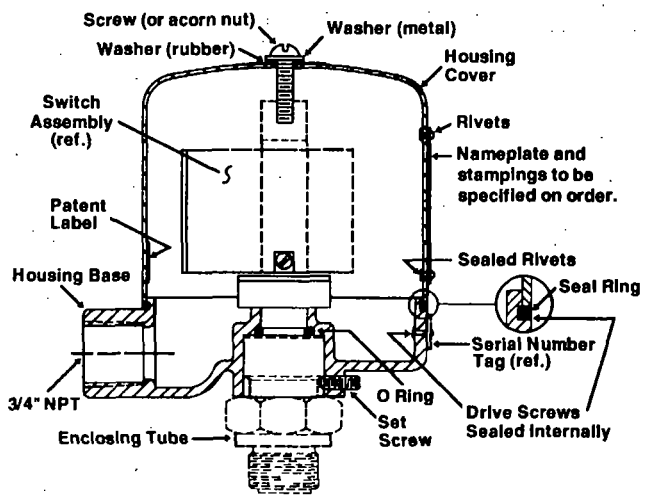

Carbon Steel Housing Assembly
Figure 13

IMPORTANT

PRODUCT WARRANTY

All Magnetrol/STI replacement parts are warranted free of defects in materials or workmanship for one full year from the date of original factory shipment.

If returned within the warranty period; and, upon factory inspection of the control, the cause of the claim is determined to be covered under the warranty; then, Magnetrol/STI will repair or replace the control at no cost to the purchaser (or owner) other than transportation.

Magnetrol/STI shall not be liable for misapplication, labor claims, direct or consequential damage or expense arising from the installation or use of equipment. There are no other warranties expressed or implied, except special written warranties covering some Magnetrol/STI products.

QUALITY ASSURANCE

The quality assurance system in place at Magnetrol guarantees the highest level of quality throughout the company. Magnetrol is committed to providing full customer satisfaction both in quality products and quality service.

Magnetrol's quality assurance system is registered to ISO 9001 and Z299.1 affirming its commitment to known international quality standards providing the strongest assurance of product/service quality available.

ASSURED QUALITY & SERVICE COST LESS

SERVICE POLICY

Owners of Magnetrol/STI controls may request the return of a control or any part of a control for complete rebuilding or replacement. They will be rebuilt or replaced promptly. Controls returned under our service policy must be returned by Prepaid transportation. Magnetrol/STI will repair or replace the control at no cost to the purchaser (or owner) other than transportation if:

1. Returned within the warranty period; and
2. The factory inspection finds the cause of the claim to be covered under the warranty.

If the trouble is the result of conditions beyond our control; or, is NOT covered by the warranty, there will be charges for labor and the parts required to rebuild or replace the equipment.

In some cases it may be expedient to ship replacement parts; or, in extreme cases a complete new control, to replace the original equipment before it is returned. If this is desired, notify the factory of both the model and serial numbers of the control to be replaced. In such cases, credit for the materials returned will be determined on the basis of the applicability of our warranty.

No claims for misapplication, labor, direct or consequential damage will be allowed.

LOW VOLTAGE DIRECTIVE

For use in Category II installations. If equipment is used in a manner not specified by the manufacturer, protection provided by equipment may be impaired.

RETURN MATERIAL PROCEDURE

So that we may efficiently process any materials that are returned, it is essential that a "Return Material Authorization" (RMA) number be obtained from the factory, prior to the material's return. This is available through Magnetrol/STI's local representative or by contacting the factory. Please supply the following information:

1. Company Name
2. Description of Material
3. Serial Number
4. Reason for Return
5. Application

Any unit that was used in a process must be properly cleaned in accordance with OSHA standards, before it is returned to the factory.

A Material Safety Data Sheet (MSDS) must accompany material that was used in any media.

All shipments returned to the factory must be by prepaid transportation.

All replacements will be shipped F.O.B. factory.

STI Controls, L.P.

a subsidiary of Magnetrol International, Incorporated

5300 Belmont Road • Downers Grove, Illinois 60515-4499 • 630-969-4028 • Fax 630-969-9489

Magnetrol

5300 Belmont Road • Downers Grove, Illinois 60515-4499 • 630-969-4000 • Fax 630-969-9489
6291 Dorman Road • Mississauga, Ontario L4V-1H2 • 905-678-2720 • Fax 905-678-7407
Heikenstraat 6 • B 9240 Zele, Belgium • 052 45.11.11 • Telex 25944 • Fax 052 45.09.93
Regent Business Ctr., Jubilee Rd. • Burgess Hill, Sussex RH15 9TL U.K. • 01444-871313 • Fax 01444-871317

©1997 Magnetrol International, Incorporated. All rights reserved. Printed in the USA.
Magnetrol and Magnetrol logotype are registered trademarks of Magnetrol International.

The brand and product names contained within this document are trademarks or registered trademarks of their respective holders.

BULLETIN: 42-683.8
EFFECTIVE: April 1997
SUPERSEDES: November 1996

Magnetrol®
STI

Serial Number Reference

Serial Numbers—Your Guide to Prompt, Accurate Service

Why serial numbers?

The serial number of each control is recorded and cross-indexed with production records. These records are then kept on microfilm to provide a quick access key to the complete engineering of any given control. This file contains full information on the mechanism furnished, exact control action, housing style, pressure and temperature, etc. In addition, all drawings and specifications are included for any special parts used in the construction of non-standard model controls.

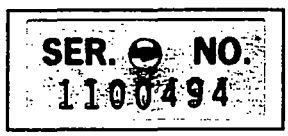

Serial Number Tag

Should electrical short-circuit damage or physical damage make parts replacement necessary, be sure your purchase order includes the SERIAL NUMBER of your control. This will insure prompt delivery of the proper parts.

Record the Serial Number of Your Control

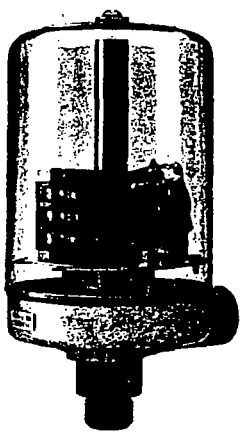

Lexan Housing...

The serial number is located at a point 180° from the conduit opening. This housing is distinguished by a clear cover.

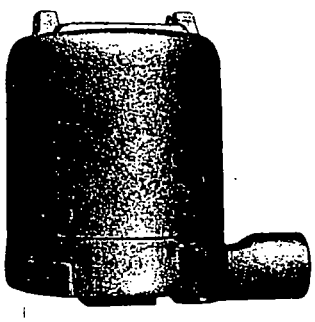

Explosion or Vapor Proof Housing...

The serial number is located at a point 90° from the conduit opening, or 90° from the nameplate.

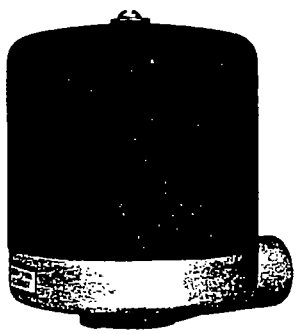

Moisture Proof Housing...

The serial number is located at a point 180° from the conduit opening. This housing is distinguished by a black sheet-steel cover. Whether the cover is standard short, standard tall, or extended, the serial number will be in this location.

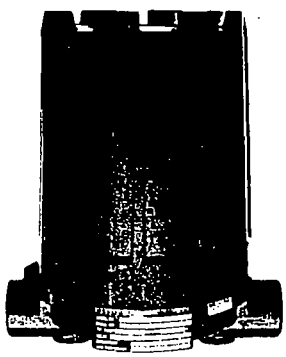

Aluminum Die Cast, Polymer Powder Coated Housing...

The serial number is located to the right of the nameplate on the housing base.

Magnetrol • 5300 Belmont Road • Downers Grove, Illinois 60515-4499 • (630)969-4000 • Fax (630)969-9489
6291 Dorman Road • Mississauga, Ontario L4V-1H2 • (905)678-2720 • Fax (905)678-7407
STI • 5300 Belmont Road • Downers Grove, Illinois 60515-4499 • (630)969-4028 • Fax (630)969-9489

BULLETIN: 41-310.8
EFFECTIVE: October 1994
SUPERSEDES and COMBINES: 41-310.6 and 95-310.0

PRODUCT WARRANTY

All Magnetrol® mechanical level controls are warranted free of defects in materials and workmanship for five full years from the date of original factory shipment. Electronic and ultrasonic level controls are warranted for a period of one full year from the date of shipment. Replacement parts are warranted for a period of one full year from the date of shipment.

If returned within the warranty period in accordance with Magnetrol's Returned Material Procedure; and, upon factory inspection of the control, the cause of the claim is determined to be covered under the warranty; then Magnetrol International will repair or replace the control at no cost to the purchaser (or owner) other than transportation.

Magnetrol shall not be liable for misapplication, labor claims, direct or consequential damage or expense arising from the installation or use of the equipment. There are no other warranties expressed or implied, except special written warranties covering some Magnetrol products.

The quality assurance system in place at Magnetrol guarantees the highest level of quality throughout the company. Magnetrol is committed to providing full customer satisfaction both in quality products and quality service.

Magnetrol's quality assurance system is registered to ISO 9001 and Z299.1 affirming its commitment to known international quality standards providing the strongest assurance of product/service quality available.

DOWNERS GROVE, ILLINOIS
EDGEWOOD, NEW YORK
SUSSEX, ENGLAND

CHAMPS-SUR-MARNE, FRANCE
MISSISSAUGA, ONTARIO
BERGISCH GLADBACH, GERMANY

ZELE, BELGIUM
MILANO, ITALY
DUBAI, UNITED ARAB EMIRATES

measured displacer points

LSL = 41"
LSH = 64
LSHH = 110

Δ's rows 20 = LSL = <42" %R348
22 = LSH = >60" %R349
24 = LSHH = ~~>96"~~ 106 %R350

```
(*****************************************************************************)
(*                                                                           *)
(*                          BLOCK:  _MAIN                                    *)
(*                                                                           *)
(*                                                                           *)
(*                        BLOCK SIZE (BYTES):   974                          *)
(*                    DECLARATIONS (ENTRIES):   348                          *)
                                                                             *)
(*                                                                           *)
(*                    HIGHEST REFERENCE USED                                 *)
(*                  ----------------------------                             *)
(*                                                                           *)
(*                          INPUT (%I):   %I0012                             *)
(*                         OUTPUT (%Q):   %Q0035                             *)
(*                       INTERNAL (%M):   %M0156                             *)
(*                    GLOBAL DATA (%G):      NONE                            *)
(*                      TEMPORARY (%T):   %T0003                             *)
(*                       REGISTER (%R):   %R0463                             *)
(*                  ANALOG INPUT (%AI):   %AI0033                            *)
(*                 ANALOG OUTPUT (%AQ):      NONE                            *)
(*                                                                           *)
(*****************************************************************************)
```

Breazeale O&M Bank #2

FLUID FLOW
PRODUCTS, INC.
MEASUREMENT/CONTROL
FILTRATION

FAX TRANSMISSION

FROM: Pete Gherardi
Fluid Flow of the Carolinas, Inc.
2108 Crown View Drive
Charlotte, NC 28227
TEL: 704-847-4464
FAX: 704-847-2377

TO: Tim Merck VM / HAL
RMT Inc.
11 Regency Hills Drive P.O. Box 16778
Greenville, SC 29606
FAX: 864 281 0288

DATE: August 7, 1997

PAGES: 2

SUBJECT: Reboot of Microprocessor

1. Power down unit
2. While holding down 2nd key button re-power unit
3. Continue to hold in 2nd key until "COMM PARAM FAIL!" is indicated on LCD. There may be some additional messages on the LCD before COMM PARAM FAIL comes up.
4. Once "COMM PARAM FAIL" is on indicator depress the down arrow repeatedly until the indicator reads Magnetrol 801.
5. At this time the micro is reset and you may recalibrate.

SPECIFICATIONS cont.

DIMENSIONAL SPECIFICATIONS inches (mm)

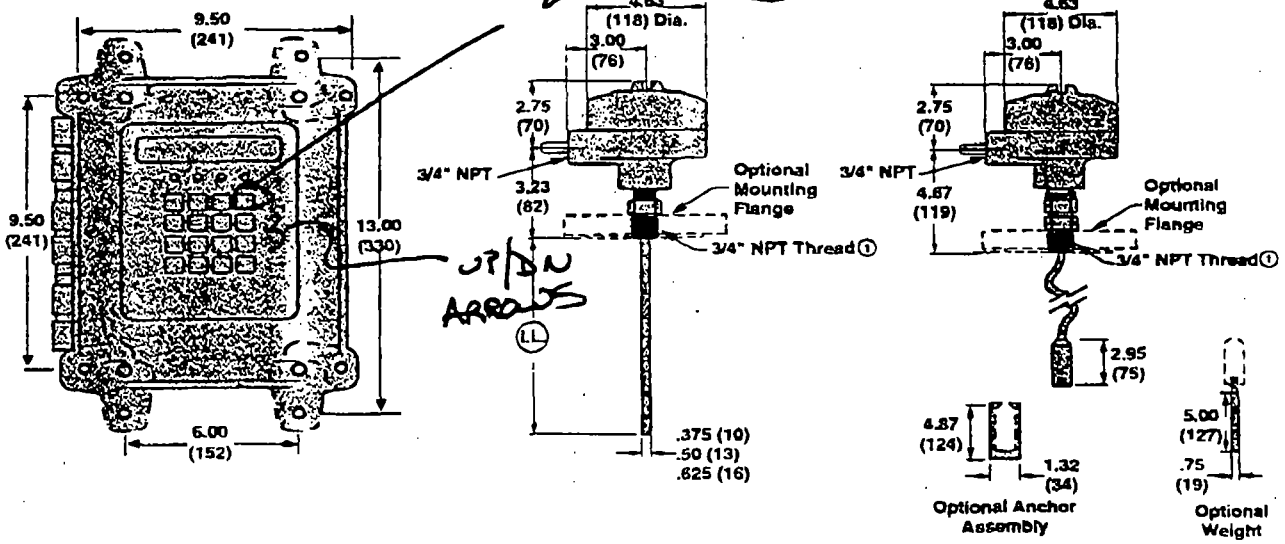

Electronics Housing | Remote Mount/Standard Rigid Probe | Remote Mount/Flexible Probe

NOTE: ① Standard process connection is $^3/_4$" NPT. Consult probe brochure (50-125) for flange and other probe connections.

REPLACEMENT PARTS

Item	Description		Part Number
1	NEMA 4X Door, LCD Display, and Keypad		Consult Factory
2	Main P.C. Board	120 VAC	030-3537-006
		120 VAC with Heater	Consult Factory
		240 VAC	030-3537-008
		240 VAC with Heater	Consult Factory
		24 VDC	Consult Factory
3	Daughter P.C. Board	Standard	030-2207-001
		Intrinsically Safe	030-2207-002
4	Display P.C. Board		030-3539-001
5	Enclosure Gasket		012-1606-001
6	Sensor Base NEMA 4X/7/9		004-9104-001
7	Sensor Cover NEMA 4X/7/9		004-9105-001
8	O-ring		012-2101-345
9	Preamplifier Assembly		030-2210-001
10	Shielded Twisted Pair (Up to 5000 feet [1500 meters])		009-7146-001
	Enclosure Accessories Kit (Includes Mounting feet, hardware and hinges)		089-5210-001

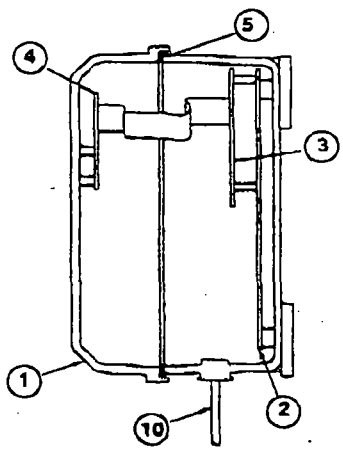

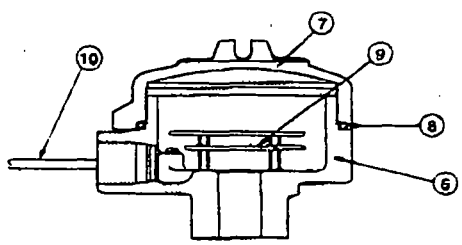

08/07/97 11:09 FLUID FLOW CAROLINA → 18642810288 NO.867 P002

REGISTERED ISO 9001/Z299.1 Assured Quality & Service Cost Less

PRODUCT WARRANTY

All Magnetrol mechanical level controls are warranted free of defects in materials and workmanship for five full years from the date of original factory shipment. Electronic and ultrasonic level controls are warranted for a period of one full year from the date of shipment. Replacement parts are warranted for a period of one full year from the date of shipment.

If returned within the warranty period in accordance with Magnetrol's Returned Material Procedure; and, upon factory inspection of the control, the cause of the claim is determined to be covered under the warranty; then Magnetrol International will repair or replace the control at no cost to the purchaser (or owner) other than transportation.

Magnetrol shall not be liable for misapplication, labor claims, direct or consequential damage or expense arising from the installation or use of the equipment. There are no other warranties expressed or implied, except special written warranties covering some Magnetrol products.

The quality assurance system in place at Magnetrol guarantees the highest level of quality throughout the company. Magnetrol is committed to providing full customer satisfaction both in quality products and quality service.

Magnetrol's quality assurance system is registered to ISO 9001 and Z299.1 affirming its commitment to known international quality standards providing the strongest assurance of product/service quality available.

Magnetrol®

DOWNERS GROVE, ILLINOIS
EDGEWOOD, NEW YORK
SUSSEX, ENGLAND

CHAMPS-SUR-MARNE, FRANCE
MISSISSAUGA, ONTARIO
BERGISCH GLADBACH, GERMANY

ZELE, BELGIUM
MILANO, ITALY
DUBAI, UNITED ARAB EMIRATES

Magnetrol®
STI

Kotron™ II Series 801
R. F. Capacitance Transmitter
For Level/Flow/Volume

Supplemental Wiring Procedure of New Style Preamplifier

A new style preamplifier is being shipped with the Series 801 transmitter to increase resolution on the measurement of low dielectric fluids and improve temperature stability of all applications. The following are instructions for the installation of this preamplifier. Further instructions for installation of the Series 801 will be found in the existing instruction manual, bulletin 50-624.

WIRING PROCEDURE

Probe Preamplifier Wiring

To connect the preamplifier to the transmitter, use a shielded twisted pair of 22 gauge stranded connectors (factory part number 009-7146-001.

Probe Preamplifier to Series 801 Transmitter

1. Strip approximately .38 inch [3/8"] (10 mm) of outer jacket insulation from each end of the shielded twisted pair.
2. At the probe preamplifier end, attach the bare shield wire of the cable to the green ground screw located in the base of the housing. Refer to Figure 1.
3. Connect the red lead to the positive (+) terminal and the black lead to the negative (—) terminal located on the probe preamplifier board.
4. Connect the red lead to the positive (+) terminal and the black lead to the negative (—) terminal of TB1 located on the Series 801 transmitter board.

NOTE: Use the blue terminal blocks on Series 801 units supplied with onboard intrinsically safe barriers.

5. Connect the shield lead at the Series 801 transmitter end to ground.
6. Wiring of the probe preamplifier to the Series 801 transmitter is now complete. Proceed to the section **Transmitter Wiring Output Wiring** located on page 6 of the Series 801 instruction manual, bulletin 50-624.

NOTE: Consult factory for replacement parts. Preamplifier assembly, part number 030-2210-001, listed on Page 27 of bulletin 50-624 is obsolete.

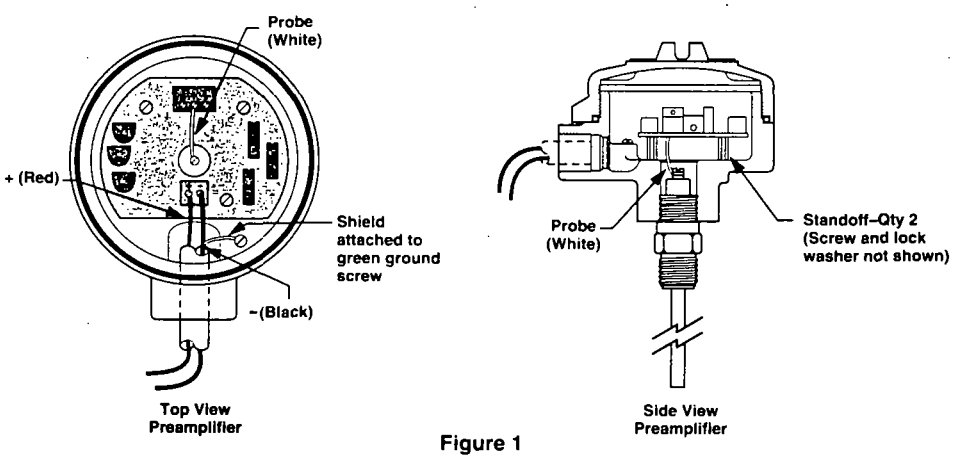

Figure 1

Magnetrol • 5300 Belmont Road • Downers Grove, Illinois 60515-4499 • (708)969-4000 • Fax (708)969-9489
6291 Dorman Road • Mississauga, Ontario L4V-1H2 • (905)678-2720 • Fax (905)678-7407
STI • 5300 Belmont Road • Downers Grove, Illinois 60515-4499 • (708)969-4028 • Fax (708)969-9489

BULLETIN: 50-623.0
EFFECTIVE: June 1996

Magnetrol®
STI

Kotron™ II Series 801
R. F. Capacitance Transmitter
For Level/Flow/Volume

Field Wiring Procedure of New Style Preamplifier

A new style preamplifier is being shipped with the Series 801 transmitter to increase resolution on the measurement of low dielectric fluids and improve temperature stability of all applications. The following are instructions for the installation of this preamplifier. Further instructions for installation of the Series 801 will be found in the existing instruction manual, bulletin 50-624.

WIRING PROCEDURE

Probe Preamplifier Wiring

To connect the preamplifier to the transmitter, use a shielded twisted pair of 22 gauge stranded connectors (factory part number 009-7146-001.

Probe Preamplifier to Series 801 Transmitter

1. Remove power to the Series 801 transmitter.
2. Carefully remove EPROM (U11), located on the motherboard, with a small screwdriver and replace with new EPROM (2.0A 121195). Make sure EPROM is facing in the correct direction (indent to the left). Refer to Figure 1.
3. Remove positive (+) and negative (–) power leads from the preamplifier in the probe housing assembly.
4. Remove the white and yellow probe wires from the electronics and probe (save the white wire by breaking away the white spacer that separates the white wire from the yellow wire).
5. Remove the preamplifier from the probe housing.
6. Carefully install the two standoffs into the probe housing base (Figure 2). Do not overtighten.
7. Install the white probe wire back onto the probe.
8. Carefully install new preamplifier The plastic screw will go into the left hole, the metal screw into the right hole. Install ground screw.
9. Install the white probe wire to the "P" terminal on the remote electronics (Figure 3). Install the red (+) and black (–) power leads into the (+) and (–) terminal block on the remote electronics.
10. **(At this point, before applying power to the Series 801 unit, it must be understood that the unit will have to be rebooted and recalibrated).**

    Before applying power to the Series 801 unit:

    A: Hold the "2nd" key.

    B. Apply power to the unit.

    C. Keep holding the "2nd" key until **COMM PARAM FAIL** appears on the display.

    D. Release the "2nd" key and with the down arrow key scroll through all of the parameters until the **801 Magnetrol** logo scrolls across the display.

    The unit is now ready for recalibration.

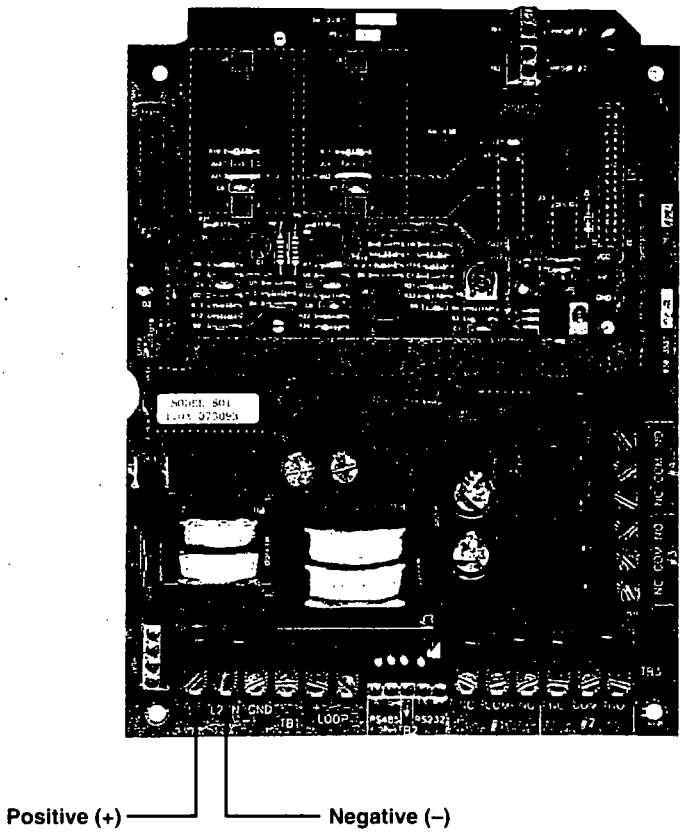

Figure 1

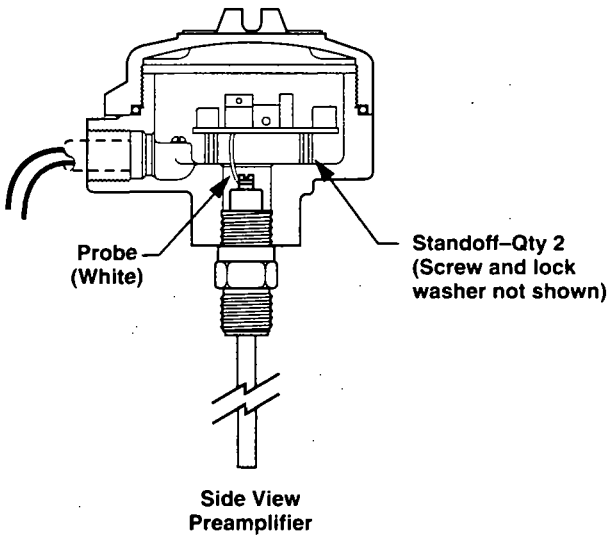

Figure 2

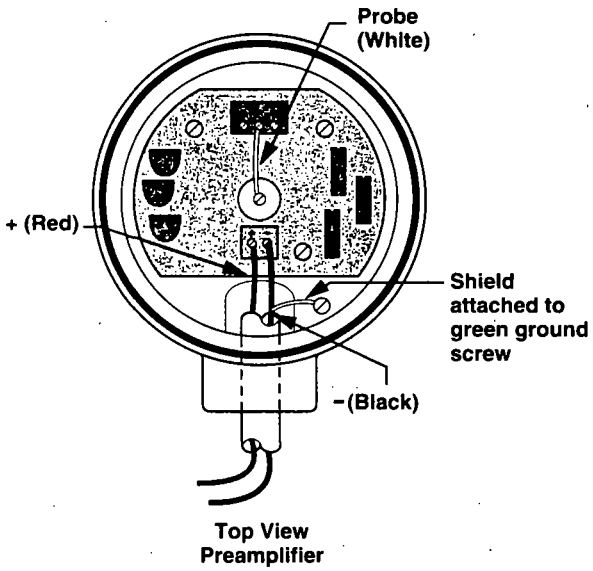

Figure 3

630

Magnetrol®

Kotron™ II Series 801 R.F. Capacitance Transmitter For Level/Flow/Volume

REGISTERED ISO 9001 • Z299.1 ASSURED QUALITY & SERVICE COST LI...

Instruction Manual and Parts List

LIT-106

TABLE OF CONTENTS

General Information 1
Installation 2-4
Wiring 5-6
Unit Configuration 7-23
Troubleshooting 24-25
Electrical Specifications 25
Agency Approvals 26
Intrinsically Safe Installations 26
Dimensional Specifications 27
Replacement Parts 27

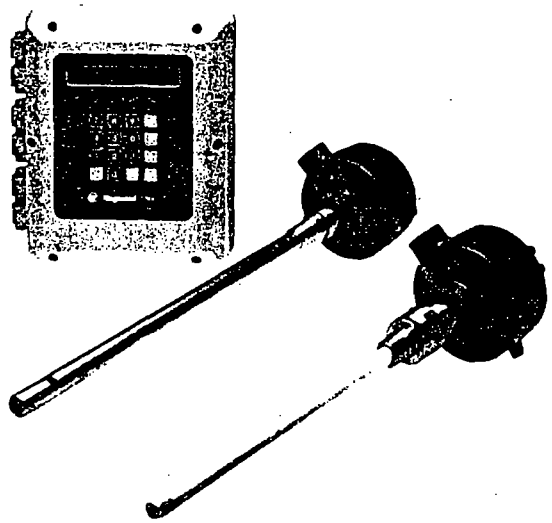

DESCRIPTION

The Kotron II Series 801 Transmitter is a new generation RF Capacitance transmitter that offers the user unparalleled power. The second generation Pulsatel preamplifier combines enhanced anti-coating circuitry with the installation flexibility of a 5000' maximum remote distance. The Series 801 can interface with two separate vessels, essentially making it a mini-multiplexer, while software mathematics allows for the ***Sum*** or ***Difference*** of the two signals.

MODEL IDENTIFICATION

Each Series 801 capacitance transmitter has a nameplate on which the model number of the unit is shown. The model number is coded to identify the options of that specific unit.

801 – □ □ 3 □ – N 4 □

KOTRON II SERIES 801 TRANSMITTER

NUMBER OF PROBES/OUTPUT
2 = 1 probe, One 4-20mA (isolated), RS-232 & RS-485
4 = 2 probes, One 4-20mA (isolated), RS-232 & RS-485

INPUT POWER
0 = 120 VAC
1 = 240 VAC
2 = 24 VDC
3 = 120 VAC with heater and thermostat
4 = 240 VAC with heater and thermostat

DIGITAL, 16 CHARACTER, LCD DISPLAY

REMOTE MOUNTING CONFIGURATION
1 = NEMA 4X
4 = NEMA 4X with I.S. probe circuit

NEMA 4X NORYL HOUSING

(4) 10 AMP SPDT RELAYS

OPTIONS
0 = None
1 = Mechanical Totalizer
2 = 31 Day Data Logger (Smart Watch)
3 = Mechanical Totalizer and 31 Day Data Logger

PRINCIPLE OF OPERATION

The amount of capacitance developed in any application is determined by the size (surface area) of the probe, the distance from the probe to its ground reference, and the dielectric constant of the medium being measured.

Considering that the probe's mounting position is fixed, and the dielectric value of the medium is constant, the amount of capacitance developed in any vessel becomes dependent upon the probe's diameter and length and its proximity to ground.

As a medium rises and falls in the tank, the amount of capacitance developed between the sensing probe and the ground reference also rises and falls. The Pulsatel circuit, mounted on the probe, changes the capacitance signal to a variable frequency which can then be sent to the main electronics located up to 5000 feet (1500 M) away via standard shielded, twisted pair cable.

INSTALLATION

CAUTION: Please read the entire installation section carefully prior to starting installation.

UNPACKING

Unpack the instrument carefully, making sure all components are removed from the packing material. Inspect the components for damage, and report any concealed damage to the carrier within 24 hours. Check the contents of the carton/crate against the packing slip and report any discrepancies to the factory. Check the nameplate model number, making sure it agrees with the packing slip and purchase order. Check and record the serial number for future reference when ordering parts.

INSTALLATION LOCATION

Kotron II Series 801 transmitters should be located with easy access for service, calibration and monitoring. The electronics should not be exposed to ambient temperatures as follows: below -20°F (-29°C) without heater option; -40°F (-40°C) with heater option; or above +160°F (+71°C). Special precaution should be made to prevent exposure to corrosive atmosphere, excessive vibration, shock, or physical damage.

CAUTION: This unit contains CMOS electronics which may be damaged by static electricity. Do not touch any semi-conductor device unless you are properly grounded

It is common practice to use the metal tank wall as the ground reference. In such cases, it is required that the probe housing makes a good electrical connection to the tank wall. If there is any doubt about this connection or the use of PTFE thread tape, gaskets, paint, or rust impede this connection, a separate metal strap should be installed between the probe housing and the tank.

In non-conductive media, sensing probes should be located close to the tank wall for greatest sensitivity. Probes should be isolated from severe motion in the tank, because surface turbulence may cause signal deviation.

CAUTION: When an insulated probe is used in a hazardous and/or abrasive medium, the probe should be inspected annually for nicks, cuts or abrasions which may degrade the integrity of the insulation. In the event that wear is found, replace the probe or consult the factory for further instructions. This procedure is critical in vessels containing hazardous media unless an I.S. probe circuit is used.

Metal Walled Tanks

On water based liquids, a problem should not be encountered with sensitivity or linearity. With non-conductive, low dielectric media, sensitivity can be enhanced by locating the probe close to and parallel with the tank wall. If this is not practical, a concentric ground tube surrounding the probe, (stilling well), may be a solution.

INSTALLATION LOCATION cont.

Tanks/Silos with Non-Conductive Materials of Construction

With plastic, concrete, wood, or any other non-conductive walled vessel, the reference electrode mentioned above needs clarification. Most commonly, this electrode will be in the form of a concentric ground tube (i.e. stilling well). In questionable circumstances, consult the factory. In all cases, a good electrical connection must be made between the ground surface and the probe housing.

NOTE: These comments also apply to glass-lined metal walled tanks.

Vertical Mounting

Vertically mounted probes should be installed so that the end of the probe rod is at least 2.00 inches (51 mm) below the lowest desired level control point with conductive materials, or 4.00 inches (102 mm) below the lowest desired level control point with non-conductive materials. Refer to Figure 1.

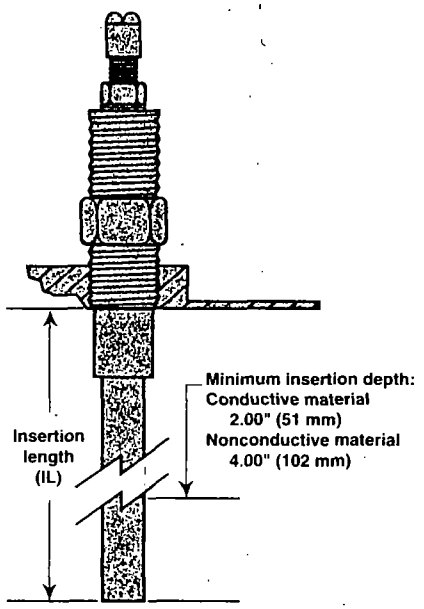

Figure 1

Transmitter Mounting Location

The transmitter enclosure should be securely fastened to an appropriate supporting structure in a location that permits easy access for maintenance. Avoid locations that are exposed to direct sunlight, flooding, high levels of radiated electromagnetic interference, and excessive vibration or shock.

INSTALLATION cont.

MOUNTING PROCEDURE

Transmitter Mounting Procedure

There are two predrilled holes in the enclosure for connecting 3/4" NEMA 4X conduit; one for power and one for the remote probe wiring. Two additional holes may be drilled in the base as shown in Figure 2.

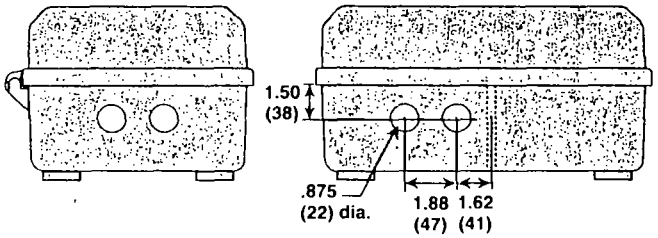

Figure 2

Transmitter Mounting Holes

1. Open the door of the unit.
2. Drill holes in the enclosure as required for additional wiring. Be careful not to damage the printed circuit boards. Be sure that the PC boards are not damaged or contaminated when removing filings and/or debris from the housing.
3. Provide watertight seals for all wiring entrances into the enclosure.
4. Mount the enclosure to a wall or flat surface using the appropriate screws or bolts. The mounting tabs on the back of the enclosure can be rotated to the sides, or top and bottom to facilitate mounting. Refer to Figure 3.

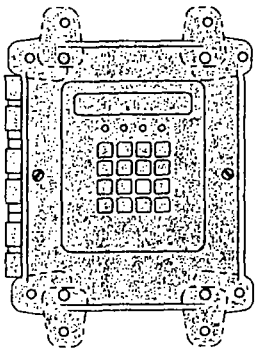

Figure 3

Transmitter Mounting Tabs

5. Install conduit for power and control wiring. Be sure all connections to the enclosure maintain a NEMA 4X rating
6. Close the transmitter door until it is time to wire the transmitter. Proceed to the Probe Mounting Procedure.

MOUNTING PROCEDURE cont.

Standard Rigid Probe

1. Thread probe into mounting bushing on tank.
2. Tighten securely being certain that the wrench is applied **ONLY** to the lower probe nut. Refer to Figure 4
3. Screw the preamplifier housing onto the probe. Refer to Figure 4.
4. Screw housing on probe until hand tight. Housing can be wrench tightened to align conduit connection with conduit.
5. Locate the white wire assembly on the upper printed circuit board. Connect the free end of this wire assembly to the probe connection screw. Refer to Figure 4.

CAUTION: *Check probe terminal connection carefully to be certain lug will not short to packing gland or interfere with assembly of remote housing to probe.*

6. Proceed to Wiring Procedure on Page 5.

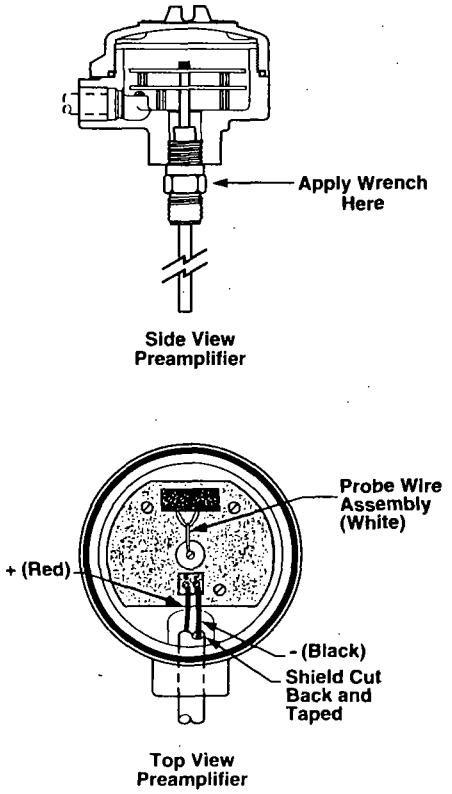

Figure 4

Standard Rigid Probe Mounting

INSTALLATION cont.

MOUNTING PROCEDURE cont.

Flexible Probe

> ***CAUTION:*** *Flexible probes are shipped with the cable clamp and the probe nut hand tightened. The end of a flexible probe* ***MUST*** *be secured to the bottom of the tank by either attachment to a bracket or to a heavy weight in order to keep the probe taut. Follow the mounting instructions listed below.*

1. Remove mylar housing insulator located over the clamp.

> ***CAUTION:*** *Do not discard the mylar housing insulator.*

2. Attach weight (if used) to probe end.
3. Insert probe end through tank mounting bushing and feed cable into the tank. Do not allow probe insulation to

> ***CAUTION:*** *Probe cable must not be in contact with anything metallic in its final installation position.*

be damaged by scraping against the bushing threads.

4. Secure lower end of probe (or optional weight) to tank bracket if one is used.
5. Apply thread sealant to mounting nut.

> ***CAUTION:*** *Apply wrench to lower probe nut only*

6. Screw mounting nut into tank bushing until tight.

NOTE: Do not allow the probe to fall in the tank while following steps 7 through 18.

7. Loosen both socket clamp screws.
8. Pull clamp and teflon retaining bushing off probe.
9. While holding probe cable, loosen upper probe nut.
10. Pull excess cable up through probe nuts until cable is taut.
11. Tighten the probe nuts.
12. Cut off cable 1.35 inches (34 mm) above top of upper probe nut and strip off 1.25 inches (32 mm) of insulation.
13. Slide teflon retaining bushing onto cable and seat it into the upper probe nut.
14. Slide clamp onto cable and seat it in the teflon retaining bushing.
15. Tighten both socket head clamp screws to approximately 35 in./lbs. torque.
16. Slip mylar housing insulator over clamp.

MOUNTING PROCEDURE cont.

Flexible Probe cont.

NOTE: Do not allow the probe to fall in the tank while following steps 7 through 18.

17. Screw housing onto probe and tighten. Make sure conduit connection is properly aligned for wire entry. Refer to Figure 5.
18. Locate the white wire assembly on the upper printed circuit board. Connect the free end of this wire assembly to the probe connection screw. Refer to Figure 5.

> ***CAUTION:*** *Check probe terminal connection carefully to be certain lug will not short to packing gland or interfere with assembly of remote housing to probe.*

19. Proceed to Wiring Procedure on Page 5.

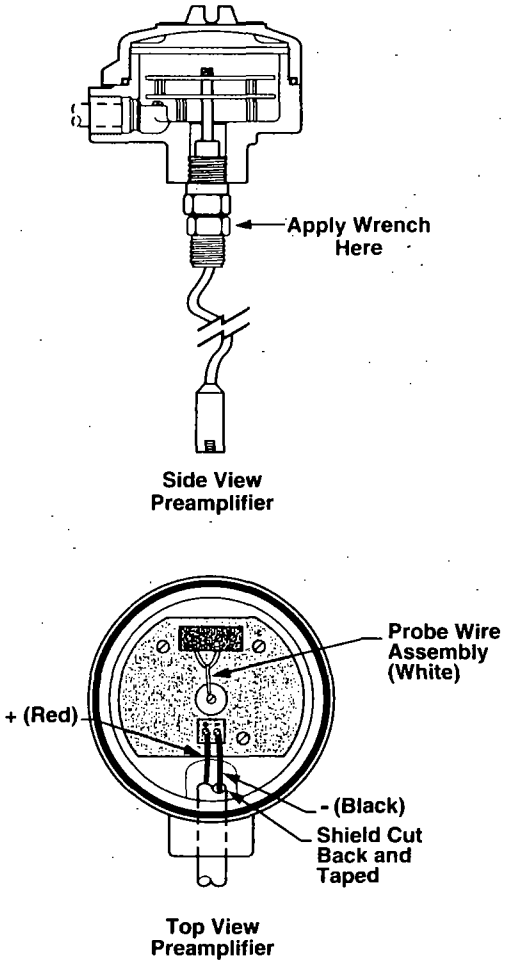

Figure 5

Flexible Probe Mounting

WIRING

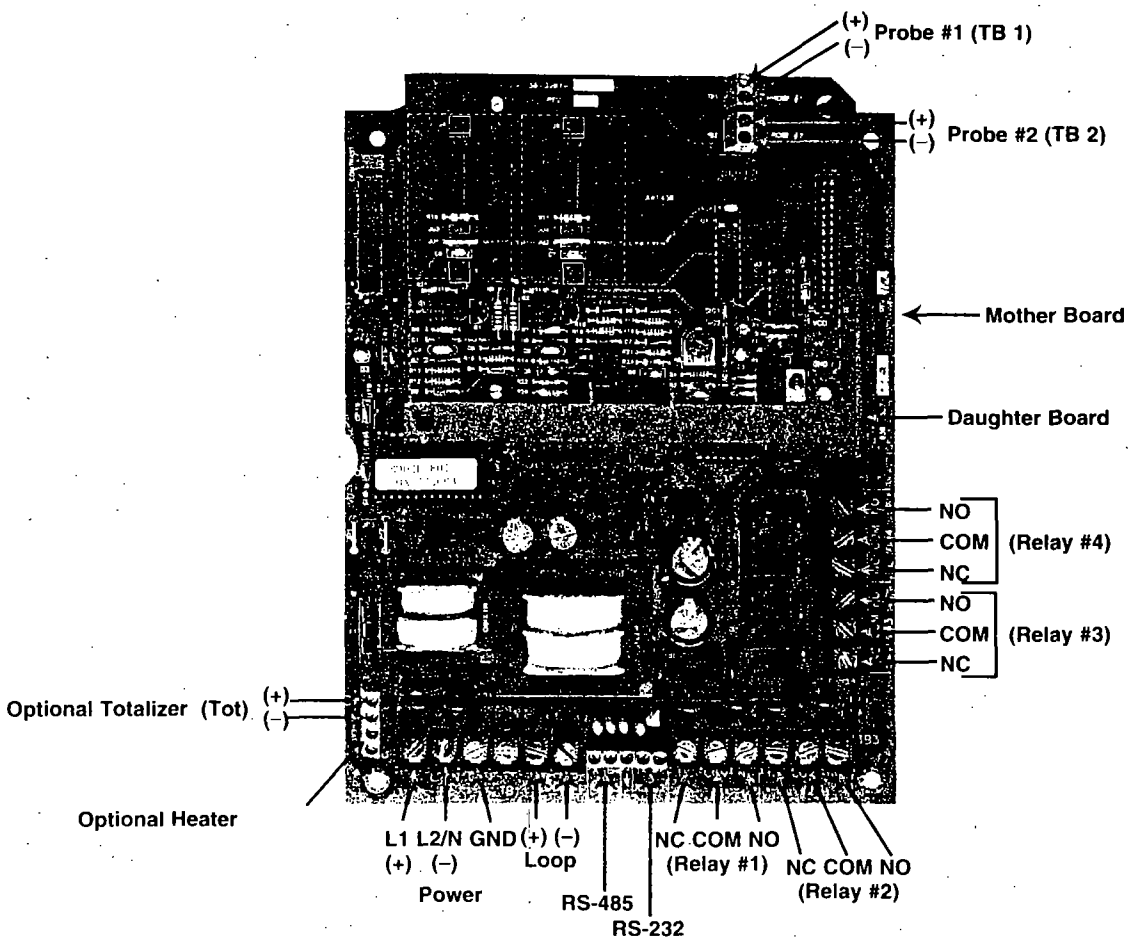

Figure 6

WIRING PROCEDURE

NOTE: Do NOT attempt to operate this unit at voltages other than as shown in the Model Identification as it may damage the unit.

> ***CAUTION:*** *This instrument is grounded through the grounding connector of terminal block TB1 of the mother board. The power input must include a ground wire connected to a good earth ground. Failure to ground the instrument may allow a shock hazard to exist!*

Transmitter Power Wiring

1. Open the cover of the transmitter enclosure by loosening the six screws.
2. The PC board is marked for 120/240 VAC (L1, L2/N, GND) and 24 VDC (+, –) power connections. Ensure proper connections are made on these three terminals. Refer to Figure 6. Spade lugs should be used. For optimum operator safety, observe the wiring colors listed in Table 1.

WIRING PROCEDURE

Transmitter Power Wiring cont.

3. 16 AWG or 18 AWG stranded wire is recommended for connection of power and control circuits.
4. Proceed to the Probe Preamplifier Wiring Section on Page 6.

	U.S.	Europe	U.K.
Line 1 (HI)	Black	Blue	Brown
Line 2 Neutral	White	Black	Blue
Ground	Green/Yellow	Green/Yellow	Green/Yellow

Wiring Colors By Country/Continent
Table 1

WIRING PROCEDURE cont.

Power Wiring

1. Make sure power source is turned off.
2. Pull power supply wires through transmitter conduit connection.
3. Connect the positive supply wire to the (L1) terminal, the negative (neutral) supply wire to the (L2/N) terminal on the transmitter, and the ground wire to the (GND) terminal. Refer to Figure 6.
4. Dress the wires together neatly and securely with cable ties.

NOTE: OBSERVE ALL APPLICABLE ELECTRICAL CODES AND PROPER WIRING PROCEDURES.

Relay Wiring

Refer to Figure 6 for terminal locations.

NOTES:

1. Relay 3 can be dedicated as a diagnostic alarm. (See calibration section of the manual for the proper use of this relay).
2. Equipment controlled by the Kotron relays is assumed to be powered from one source, while the Kotron unit itself is assumed to be powered from a different source.
3. "Fail" means a loss of power to the Kotron unit.
4. a. When the relay coil is de-energized, a connection is made between the terminals CM (common) and NC (normally closed), and there is no connection between CM and NO (normally open).

   b. When the relay coil is energized, a connection is made between the terminals CM and NO, and there is no connection between CM and NC.

Probe Preamplifier Wiring

To connect preamplifier to transmitter, use a shielded twisted pair of 22 gauge stranded connectors (Magnetrol P/N 009-7146-001).

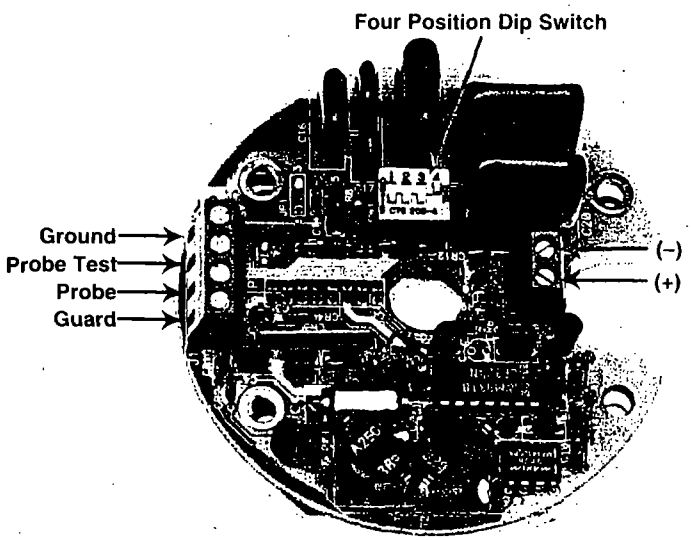

Probe Preamplifier Assembly

WIRING PROCEDURE cont.

Preamplifier to Transmitter

1. Strip approximately .38 inch [3/8"] (10 mm) of outer jacket insulation from each end of the shielded twisted pair.
2. At the probe preamplifier end, cut the bare shield wire of the cable close to the insulating jacket.
3. Connect the red lead to the positive (+) terminal of TB1 on the preamplifier board. Refer to Figure 4.
4. Connect the black lead to the negative (–) terminal on the preamplifier board.
5. Connect the red lead to positive (+) terminal of TB1 on the daughter board in the transmitter.

NOTE: For intrinsically safe applications connect to the blue terminal blocks located on the encapsulated intrinsically safe barriers.

6. Connect black lead and shield to the negative (–) terminal on the daughter board in the transmitter.

NOTE: Terminal block TB1 must be used in a single probe application.

Dip Switch Capacitance Ranges

Position 1 < 500 pF total capacitance

Position 2 < 2000 pF total capacitance (factory preset)

Position 3 < 10,000 pF total capacitance

Position 4 up to 50,000 pF total capacitance

NOTE: Only one position should be ON at any time. These are set at the factory. Consult the factory before any changes are made.

Transmitter Wiring

Output Wiring

Connect 4-20 mA output wiring to (+) and (–) terminals of TB1 on the main printed circuit board. Refer to Figure 6. Ensure proper polarity by connecting red wire to (+) terminal and black wire to (–) terminal. The shield should be connected to ground to ensure proper noise immunity.

Coarse Capacitance Dip Switch Block

Position	Capacitance Range	Application
1	500 pF	Low capacitance e.g. hydrocarbons or any spans < 48"
2	2000 pF	Standard shipped from the factory in this position
3	10,000 pF	41-5095 probe > 60" 41-5101 probe in conductive media > 25'
4	50,000 pF	41-5204 Ultra Gain pobe only

NOTE: Only one position should be ON at any time. These are set at the factory. Consult the factory before any changes are made.

UNIT CONFIGURATION

GENERAL CONFIGURATION INSTRUCTIONS

The Kotron II Series 801 capacitance transmitter contains a microprocessor-based operator interface which allows for easy configuration of level, flow or volume control applications. These features are built into the transmitter and are entered via a keypad located on the front of the unit.

This operator interface and the instructions for the Unit Configuration are broken down into six main groups of menus, as follows:

MEASURED VALUES	To view measured values
SYSTEM CONFIG	First time configuration (Essential programming information for measurements)
I/O CONFIG	Configure input/output functions
CALIBRATION	Values that affect the units performance
DIAGNOSTICS	Test functions
LAPTOP	Download data log to Lap Top computer. (With optional Data Logger only)

Passwords

The Series 801 transmitter has two types of passwords that can be used to protect configuration parameters. They are as follows:

GENERAL PASSWORD - The General Password is used for the **I/O Config** portion of the Menu Structure (except for probe lo/probe hi). Any time a change is made to parameters in this menu, ie. 4-20 mA, relays, etc., the Series 801 will prompt the operator to enter a password. This password can be any one to six character numeric combination that is easy for the operator to remember.

SUPERVISORY PASSWORD -The Supervisory Password is used for the **System Config** and the **Calibration** portion of the Menu Structure (and probe lo/probe hi). This password is used to protect values that can affect the performance and/or accuracy of the device.

NOTE: Although the Supervisory Password is normally used in the System Config and the Calibration menus, this password can also be used in any portion of the menus. The Supervisory Password overrides the General Password.

The Passwords can be changed at any time via the Calibration mode.

If an invalid password is entered into the 801, the display will read **PASSWORD INVALID**. By pressing the DEL key three times, the unit will return to the normal run mode and continue to operate with the previous programmed parameters. **Please enter the programmed password below for future reference.**

Password ☐☐☐☐☐☐

CAUTION: *The Series 801 is shipped from the factory with the password 0801. If the programmed password is misplaced or forgotten, please consult the factory for assistance.*

GENERAL CONFIGURATION INSTRUCTIONS cont.

Operator keypad

All Unit Configuration instructions in this manual will show the local transmitter display exactly as it will appear to the operator on the Series 801.

The operator interface to the 801 is via a keypad consisting of the following keys:

[0] - [9]	For numeric entry of parameters
[.]	For decimal numeric entries
[DEL]	To exit any programming area and return to the measurement mode
[ENT]	For storing new parameter values into memory. Also used to exit the parameter entry mode, if pressed prior to entering numeric parameter values
[▲] [▼]	To sequentially access other parameter procedures. In addition, parameters may be skipped over without affecting their stored values
[2ND]	To change the display scrolling speed when entering text

All values for Parameter Entry procedures follow the trans action flow below:

FIRST LEVEL PROGRAMMING MENUS

Series 801

- **Measured Values**
- **System Configuration**
- **I/O Configuration**
- **Calibration**
- **Diagnostics**
- **Laptop**
- **>>>QUIT<<<**

NOTE: Prior to programming, it is suggested that the installation is reviewed and all data such as **probe lo** and **probe hi** points, desired **units of measurement, 4-20 mA settings,** and **relay set points** are written down to aid in the programming.

SERIES 801 MAIN MENU STRUCTURE
SINGLE PROBE OPERATION

Series 801

Measured Values

- Level
- Volume (Volume mode only)
- Flow (Flow mode only)
- Totalizer (Flow mode only)
- Loop
- Calculation
- View Data Log
- Previous Menu

System Configuration

- Unit Operation
- Level Units
- Mode Setup
  - Level Only
    - Level Limit
    - Probe Lo Point
    - Probe Hi Point
    - Previous Menu
  - Volume & Level
    - Vessel Type
    - Volume Units
    - Level Limit
    - Probe Lo Point
    - Probe Hi Point
    - Previous Menu
  - Flow & Level
    - Flow Element
    - Flow Units
    - Low Flow Cutoff
    - Level Limit
    - Probe Lo Point
    - Probe Hi Point
    - Previous Menu

I/O Configuration

- Relay Settings
- 4-20 mA Settings
- Totalizer (Flow mode only)
- Comm Port Setup
- Previous Menu

Calibration

- Damping
- Set Clock
- Enter Tag
- Default Display
- Calculation
- Change Password
- Change Sup Password
- Previous Menu

Diagnostics

- Test Relays
- Test 4-20 mA Loop
- Signal Values
- View Version #
- Extended Errors
- Previous Menu

Laptop

- STRT
- END

>>>QUIT<<<

UNIT CONFIGURATION cont.

NOTE: Prior to programming, it is suggested that the installation is reviewed and all data such as **probe lo** and **probe hi** points, desired **units of measurement, 4-20 mA settings,** and **relay set points** are written down to aid in the programming.

SERIES 801 MAIN MENU STRUCTURE
DUAL PROBE OPERATION

Series 801

Measured Values

- Probe 1 Select
  - P1 Level
  - P1 Volume (Volume mode only)
  - P1 Flow (Flow mode only)
  - Previous Menu
- Probe 2 Select
  - P2 Level
  - P2 Volume (Volume mode only)
  - P2 Flow (Flow mode only)
  - Previous Menu
- Totalizer (Flow mode only)
- Loop
- Calculation
- View Data Log
- Previous Menu

System Configuration

- Unit Operation
- Probe 1 Select
  - *Level Only*
  - Level Units
  - Mode Setup
  - Level Limit
  - Probe Lo Point
  - Probe Hi Point
  - Previous Menu
  - *Volume & Level*
  - Level Units
  - Mode Setup
  - Vessel Type
  - Volume Units
  - Level Limit
  - Probe Lo Point
  - Probe Hi Point
  - Previous Menu
  - *Flow & Level*
  - Level Units
  - Mode Setup
  - Flow Element
  - Flow Units
  - Low Flow Cutoff

System Configuration cont.

- Probe 1 Select cont.
  - *Flow & Level cont.*
  - Level Limit
  - Probe Lo Point
  - Probe Hi Point
  - Previous Menu
- Probe 2 Select — Same as Probe 1 Select

I/O Configuration

- Relay Settings
- 4-20 mA Settings
- Totalizer (Flow mode only)
- Comm Port Setup
- Previous Menu

Calibration

- Damping
- Set Clock
- Enter Tag
- Default Display
- Calculation
- Change Password
- Change Sup Password
- Previous Menu

Diagnostics

- Test Relays
- Test 4-20 mA Loop
- Signal Values
- View Version #
- Extended Errors
- Previous Menu

Laptop

- STRT
- END

>>>QUIT<<<

NOTE: Prior to programming, it is suggested that the installation is reviewed and all data such as **probe lo** and **probe hi** points, desired **units of measurement, 4-20 mA settings,** and **relay set points** are written down to aid in the programming.

SERIES 801 MAIN MENU STRUCTURE
DIFFERENCE OR SUM OPERATION

Series 801

Measured Values

- Probe 1 Select
  - P1 Level
  - P1 Volume (Volume mode only)
  - P1 Flow (Flow mode only)
  - Previous Menu
- Probe 2 Select
  - P2 Level
  - P2 Volume (Volume mode only)
  - P2 Flow (Flow mode only)
  - Previous Menu
- Comb. Level
- Comb. Volume (Volume mode only)
- Comb. Flow (Flow mode only)
- Totalizer (Flow mode only)
- Loop
- Calculation
- View Data Log
- Previous Menu

System Configuration

- Unit Operation
- Level Units
- Mode Setup
- Volume Units (Volume mode only)
- Flow Units (Flow mode only)
- Probe 1 Select
  - *Level Only*
  - Level Limit
  - Probe Lo Point
  - Probe Hi Point
  - Previous Menu
  - *Volume & Level*
  - Vessel Type
  - Level Limit
  - Probe Lo Point
  - Probe Hi Point
  - Previous Menu
  - *Flow & Level*
  - Flow Element
  - Low Flow Cutoff

System Configuration cont.

- Probe 1 Select cont.
  - *Flow & Level cont.*
  - Level Limit
  - Probe Lo Point
  - Probe Hi Point
  - Previous Menu
- Probe 2 Select — Same as Probe 1 Select

I/O Configuration

- Relay Settings
- 4-20 mA Settings
- Totalizer (Flow mode only)
- Comm Port Setup
- Previous Menu

Calibration

- Damping
- Set Clock
- Enter Tag
- Default Display
- Calculation
- Change Password
- Change Sup Password
- Previous Menu

Diagnostics

- Test Relays
- Test 4-20 mA Loop
- Signal Values
- View Version #
- Extended Errors
- Previous Menu

Laptop

- STRT
- END

>>>QUIT<<<

MEASURED VALUES MENU

This menu is used to view present values being measured in the Series 801. The menu layout is shown below.

Series 801

Measured Values

- Level
  - Present measurement
- Volume (Volume mode only)
  - Present measurement
- Flow (Flow mode only)
  - Present measurement
- Totalizer (Flow mode only)
  - Present measurement
- Loop
  - Present measurement
- Calculation
  - Present measurement
- View Data Log
  - Present measurement
- Previous Menu

Please refer to the above menu layout for the configuration instructions below.

From the Default Display, press ENT to view the *Measured Values* menu. **Measured Values** and the **UP/DOWN** arrows will be displayed.

To view the Measured Values - Press ENT at the **Measured Values** display. **Level** will be displayed if level mode has been selected. (**Level or Volume** can be displayed if volume mode has been selected. **Level, Flow or Totalizer** can be displayed if flow mode has been selected).

To view the Present Measurement: - Press ENT. After reviewing, press ENT to return to **Level, Volume** (Volume Mode Only) or **Flow** (Flow Mode Only).

To scroll down to the next Measured Value - Press the DOWN arrow. Pressing the UP arrow scrolls up the menu. Press ENT at any measured value that you wish to review.

If you do not wish to view the measured values at this time, press DEL up to three times from anywhere in the display and the unit will return to the default display. Pressing ENT at **Previous Menu** display, will cause the unit to return to **Measured Values**.

SYSTEM CONFIG MENU cont.

Level Measurement

This menu is used to configure the main control parameters of the Series 801 for level measurement.

For the purposes of this manual, and to become familiar with the configuration parameters of this unit, all instructions will be shown. It is important to note that once in the System Config menu, you may scroll through the selections by using the UP or DOWN arrows. Once the desired selection is displayed, press ENT. The unit is capable of being configured in three different modes of operation.

- **Level Only**
- **Volume & Level**
- **Flow & Level**

The menu layout for **Level Measurement** is shown below.

Series 801

Measured Values

System Config - Level Measurement

- **Unit Operation**
- **Level Units**
- **Mode Setup**
- **Level Limit**
- **Probe Lo Point**
- **Probe Hi Point**
- **Previous Menu**

Unit Operation

- **Single Probe**
- **Dual Probe**
- **Difference (1-2)**
- **Summing (1+2)**

Please refer to the above menu layout for the configuration instructions below.

From the Default Display, press ENT to display **Measured Values**. Press the DOWN arrow to display **System Config**.

Press ENT once again to enter the System Config Menu and to display **Unit Operation**. Press ENT to display the present configuration. Use the UP or DOWN arrow to scroll through the options. When the desired selection is. displayed, press ENT to store the value. If the mode selection has been changed, a warning will appear:

*****WARNING*** This mode change WILL erase ALL settings! Confirm change by pressing <9> will be displayed if the selection has been changed. Press <9> to confirm.**

Supr Password? will be displayed and your chosen password must be entered at this time. The unit will display the next menu item.

SYSTEM CONFIG MENU cont.

Level Units

- **Inches**
- **Feet**
- **Centimeters**
- **Meters**

Press ENT once again to enter System Config and to display **Level Units**. Press ENT to display the present units of measurement. Use the UP or DOWN arrow to scroll through units of measurement. When the desired selection is displayed, press ENT to store the value. **Password?** will be displayed if the selection has been changed and your chosen password must be entered at this time. Press ENT to display the next menu item - **Mode Setup.**

Refer to Page 7 on selection of a General or Supervisory Password.

Mode Set Up

- **Level Only**
- **Volume & Level**
- **Flow & Level**

With **Mode Set Up** displayed, press ENT to display the present mode. Scroll UP or DOWN until the desired mode is displayed. Press ENT. If the mode selection has changed, a warning will appear:

*****WARNING*** This mode change WILL erase ALL settings! Confirm change by pressing <9> will be displayed if the selection has been changed. Press <9> to confirm.**

Supr Password? will be displayed and your chosen password must be entered at this time. The unit will display the next menu item - **Level Limit.**

Press ENT to display the maximum level possible in the present units of measurement. Press ENT to display the next menu item - **Probe Lo Point.**

NOTES:

1. The Probe Lo and Probe Hi points are the most critical in the calibration procedure. Be sure of the values before they are entered.
2. The media level must be moved to accomplish this procedure. The Probe Lo and Probe Hi points can be entered in any order and can be easily changed in the future when the process level is at a much higher or lower point.
3. A minimum level change of two percent (2%) of tank height (or 5pF, whichever is greater) will yield a valid calibration. However, a large change yields better accuracy.
4. The unit will automatically "time out" and revert back to the Default Display after four minutes if without a keystroke. Any information already entered will remain in memory. Simply reenter the System Config section and enter any remaining data.

SYSTEM CONFIG MENU cont.

Level Measurement cont.

Press ENT to display current **Probe Lo** value. Enter the exact low level of the process medium. Use proper level units (inches, centimeters, etc.) previously selected. When the desired value is displayed, press ENT to store the value. **Supr Password?** will be displayed if the selection is changed. Enter your **Supr Password** at this time. Press ENT to accept the password and to display **Probe Hi Point.**

Move medium to a high point in the tank or simulate the level change by moving the probe. Press ENT to display current **Probe Hi** value. Enter the exact level of the process medium. Use proper level units (inches, centimeters, etc.) previously selected. When the desired value is displayed, press ENT to store the value. **Supr Password?** will be displayed if the selection is changed. Enter your **Supr Password** at this time. Press ENT to accept the password and to display **Previous Menu.**

If the application utilizes two probes (dual probe, difference, or summing) continue to the calibration of **Probe 2**. Press ENT to display **Probe 2 Select.** Press ENT to display **Level Units** and begin calibration of Probe 2. Enter all values for Level Units, Mode Setup, Probe Lo, and Probe Hi points.

System Configuration is now complete. Proceed to I/O Configuration on Page 20 to continue Unit Configuration.

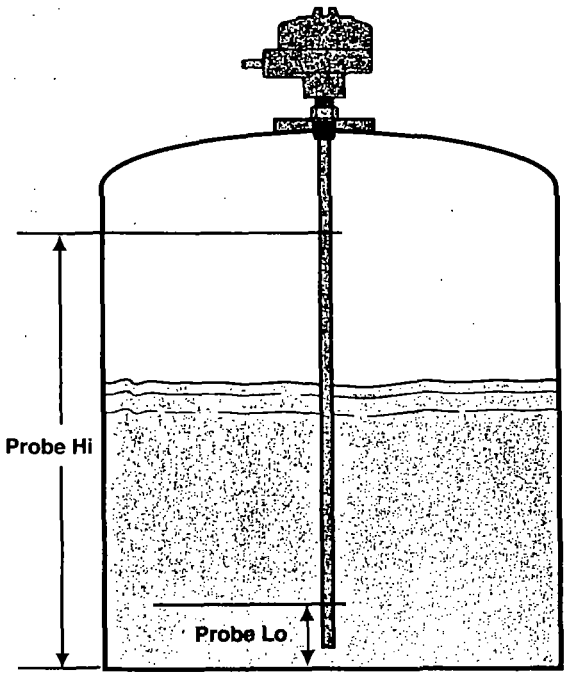

SYSTEM CONFIG MENU cont.

Volume and Level Measurement

This menu is used to configure the main control parameters of the Series 801 for volume and level measurements.

For the purposes of this manual and to become familiar with the configuration parameters of this unit, all instructions will be shown. It is important to note that once in the System Config menu, you may scroll through the selections by using the UP or DOWN arrow. Once the desired selection is displayed, press ENT. The unit is capable of being configured in three different modes of operation.

- **Level Only**
- **Volume & Level**
- **Flow & Level**

The menu layout for **Volume and Level Measurement** is shown below.

Series 801

Measured Values

System Config - Volume and Level Measurement

- **Unit Operation**
- **Level Units**
- **Mode Setup**
- **Vessel Type**
- **Volume Units**
- **Level Limit**
- **Probe Lo Point**
- **Probe Hi Point**
- **Previous Menu**

Unit Operation

- **Single Probe**
- **Dual Probe**
- **Difference (1-2)**
- **Summing (1+2)**

Please refer to the above menu layout for the configuration instructions below.

From the Default Display, press ENT to display **Measured Values**. Press the DOWN arrow to display **System Config**.

Press ENT once again to enter System Config and to display **Unit Operation**. Press ENT to display the present configuration. Use the UP or DOWN arrow to scroll through the options. When the desired selection is displayed, press ENT to store the value. If the mode selection has changed, a warning will appear:

*****WARNING*** This mode change WILL erase ALL settings! Confirm change by pressing <9> will be displayed if the selection has been changed. Press <9> to confirm.**

Supr Password? will be displayed and your chosen password must be entered at this time. The unit will display the next menu item - **Level Units**.

SYSTEM CONFIG MENU cont.

Level Units

- **Inches**
- **Feet**
- **Centimeters**
- **Meters**

Press ENT once again to enter System Config and to display **Level Units**. Press ENT to display the present units of measurement. Use the UP or DOWN arrow to scroll through units of measurement. When the desired selection is displayed, press ENT to store the value. **Password?** will be displayed if the selection has been changed and your chosen password must be entered at this time. The unit will display the next menu item - **Mode Setup**.

Refer to Page 7 on selection of a General or Supervisory Password.

Mode Set Up

- **Level Only**
- **Volume & Level**
- **Flow & Level**

With **Mode Set Up** displayed, press ENT to display the present mode. Scroll UP or DOWN until the desired mode is displayed. Press ENT. If the mode selection is changed, a warning will appear:

*****WARNING*** This mode change WILL erase ALL settings! Confirm change by pressing <9> will be displayed if the selection has been changed. Press <9> to confirm.**

Supr Password? will be displayed and your chosen password must be entered at this time. The unit will display the next menu item - **Vessel Type**.

Volume and Level

Vessel Type

- **Horiz/Flat**
- **Horiz/Elipp.**
- **Horiz/Sphere**
- **Verti/Flat**
- **Verti/Conical**
- **Spherical**
- **Custom Table**

With **Vessel Type** displayed, press ENT to display the present selection. Use the UP or DOWN arrow to scroll through the **Vessel Type** selections. When the desired vessel is displayed, press ENT.

Enter the values needed to define the vessel parameters (ie. length, height, radius, end radius, cone, etc.). Refer to detailed vessel drawings on Page 15 for definitions.

NOTE: For Horiz/Elipp tanks, when **END** is displayed, enter the value for one end of vessel only.

When the necessary parameters are entered, the unit will display the next menu item - **Volume Units**.

SYSTEM CONFIG MENU cont.

Volume and Level Measurement - Vessel Drawings

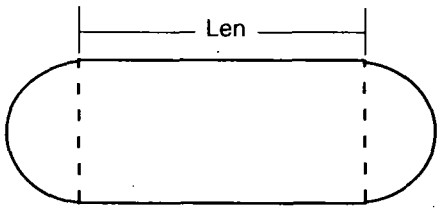

Horizontal/Spherical

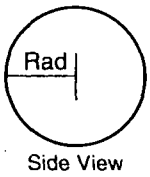

Side View

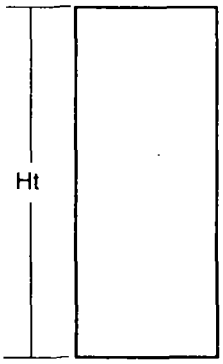

Vertical/Flat

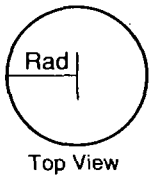

Top View

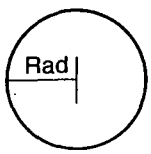

Side View

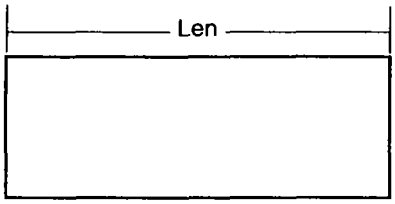

Horizontal/Flat

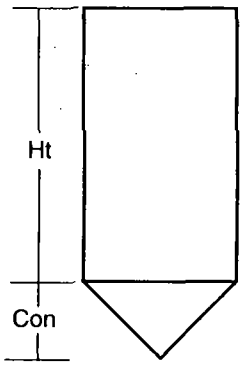

Vertical/Conical

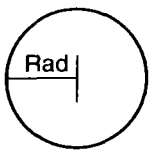

Top View

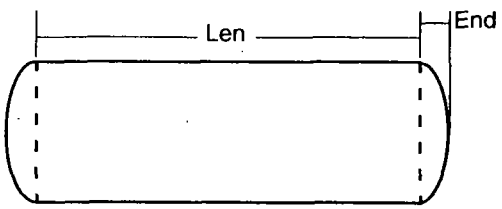

Horizontal/Elliptical

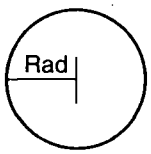

Side View

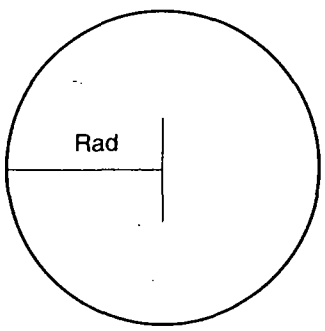

Spherical

SYSTEM CONFIG MENU cont.

Custom Table

If a custom table is selected, **Password?** will be displayed. Enter password and **Table Name** will be displayed. Press ENT and the present name will appear on the display. Press the 2nd key to start the left value/letter scrolling. If a faster scrolling speed is desired, press 2nd again. Make the selection by pressing ENT to lock in the first letter/value designation of the Table name. Press ENT once again to proceed to the next character. Perform the same steps as stated above. When completed, press ENT and the display will read **Max. Table Span**. Enter the maximum span in the units of measurement selected. **Max. Table Value** will then be displayed. Enter the maximum value in the customer conversion/strapping table. **Table Units** will be displayed. Enter via the 2nd key in any units. Press ENT and display reads **ENTER TABLE PTS**. Press ENT again to read **00%**: Begin entering percent of volume for each % of height displayed in 2% steps. Table is complete after all 51 points are entered. After entering the points in the table, **Previous Menu** is displayed. Press ENT to continue to **Volume Units**.

Password? will be displayed and your chosen password must be entered at this time. Press ENT to acknowledge the accepted password and the unit will display the next menu item - **Volume Units.**

Volume Units

- **Cubic Feet**
- **Gallons**
- **Million Gallons**
- **Cubic Meters**
- **Liters**
- **Million Liters**
- **Petroleum Barrel**

With **Volume Units** displayed, press ENT to display the selected units. Scroll to the desired **Volume Units** and press ENT. If the mode selection has changed, a warning will appear:

WARNING This mode change WILL erase ALL settings! Confirm change by pressing <9> will be displayed if the selection has been changed. Press <9> to confirm.

Supr Password? will be displayed and your chosen password must be entered at this time. The unit will display the next menu item - **Level Limit**.

Press ENT to display the maximum level possible in the present units of measurement. Press ENT to display the next menu item - **Probe Lo.**

Refer to Page 7 on selection of a General or Supervisory Password.

NOTES:

1. The Probe Lo and Probe Hi points are the most critical entries in the calibration procedure. Be sure of the values before they are entered.
2. The media level must be moved to accomplish this procedure. The Probe Lo and Probe Hi points can be entered in any order and can be easily changed in the future when the process level is at a much higher or lower point.
3. A minimum level change of two percent (2%) of tank height (or 5pF, whichever is greater) will yield a valid calibration. However, a large change yields better accuracy.
4. The unit will automatically "time out" and revert back to the Default Display after four minutes if without a keystroke. Any information already entered will remain in memory. Simply reenter the System Config. section and enter any remaining data.

Press ENT to display current **Probe Lo** value. Enter the exact low level of the process medium. Use proper level units (inches, centimeters, etc.) previously selected. When the desired value is displayed, press ENT to store the value. **Supr Password?** will be displayed if the selection is changed. Enter your **Supr Password** at this time. Press ENT to accept the password and to display **Probe Hi.**

Move medium to a high point in the tank or simulate the level change by moving the probe.Press ENT to display current **Probe Hi** value. Enter the exact level of the process medium. Use proper level units (inches, centimeters, etc.) previously selected. When the desired value is displayed, press ENT to store the value. **Supr Password?** will be displayed if the selection is changed. Enter your **Supr Password** at this time. Press ENT to accept the password and to display **Previous Menu.**

If the application utilizes two probes (dual probe, difference, or summing) continue to the calibration of **Probe 2**. Press ENT to display **Probe 2 Select.** Press ENT to display **Level Units** and begin calibration of Probe 2. Enter all values for Level Units, Mode Setup, Probe Lo, and Probe Hi points.

System Configuration is now complete. Proceed to I/O Configuration on Page 20 to continue Unit Configuration.

SYSTEM CONFIG MENU cont.

Flow and Level Measurement

This menu is used to configure the main control parameters of the Series 801 for flow and level measurements.

For the purposes of this manual and to become familiar with the configuration parameters of this unit, all instructions will be shown. It is important to note that once in the System Config menu, you may scroll through the selections by using the UP or DOWN arrow. Once the desired selection is displayed, press ENT. The unit is capable of being configured in three different modes of operation.

- **Level Only**
- **Volume & Level**
- **Flow & Level**

The menu layout for **Flow and Level Measurement** is shown below.

Series 801

Measured Values

System Config - Flow and Level Measurement

- **Unit Operation**
- **Level Units**
- **Mode Setup**
- **Flow Element**
- **Flow Units**
- **Low Flow Cutoff**
- **Level Limit**
- **Probe Lo Point**
- **Probe Hi Point**
- **Previous Menu**

Please refer to the above menu layout for the configuration instructions below.

From the Default Display, press ENT to view the **Measured Values** menu. Press DOWN arrow to display **System Config.**

Press ENT once again to enter the System Config menu and to display **Unit Operation**. Press ENT to display the present configuration. Use the UP or DOWN arrow to scroll through the options. When the desired selection is displayed, press ENT to store the value. If the mode selection has changed, a warning will appear:

*****WARNING*** This mode change WILL erase ALL settings! Confirm change by pressing <9> will be displayed if the selection has been changed. Press <9> to confirm.**

Supr Password? will be displayed and your chosen password must be entered at this time. The unit will display the next menu item

SYSTEM CONFIG MENU cont

Level Units

- **Inches**
- **Feet**
- **Centimeters**
- **Meters**

Please refer to the above menu layout for the configuration instructions below.

Press ENT once again to enter System Config and to display **Level Units**. Press ENT to display the present units of measurement. Use the UP or DOWN arrow to scroll through units of measurement. When the desired selection is displayed, press ENT to store the value. **Password?** will be displayed if the selection has been changed and your chosen password must be entered at this time. The unit will display the next menu item - **Mode Setup.**

Mode Set Up

- **Level Only**
- **Volume & Level**
- **Flow & Level**

With **Mode Set Up** displayed, press ENT to display the present mode. Scroll UP or DOWN until the desired mode is displayed. Press ENT. If the mode selection has been changed, a warning will appear:

*****WARNING*** This mode change WILL erase ALL settings! Confirm change by pressing <9> will be displayed if the selection has been changed. Press <9> to confirm.**

Supr Password? will be displayed and your chosen password must be entered at this time. The unit will display the next menu item - **Flow Element.**

Flow and Level

Flow Element

- **V-notch 22.5°**
- **30°**
- **45°**
- **60°**
- **90°**
- **120°**
- **Parshall 1"**
- **2"**
- **3"**
- **6"**
- **9"**
- **12"**
- **18"**
- **24"**
- **36"**
- **48"**
- **60"**
- **72"**
- **96"**
- **120"**
- **144"**

UNIT CONFIGURATION cont.

SYSTEM CONFIG MENU cont

Flow and Level

Flow Element cont.

- **Rectangular/End Contractions (Rct/Cntr)**
- **Rectangular**
- **Cipolletti**
- **Palmer Bowlus 4"**
- **6"**
- **8"**
- **10"**
- **12"**
- **15"**
- **18"**
- **21"**
- **24"**
- **27"**
- **30"**
- **H-Flume 6"**
- **9"**
- **12"**
- **18"**
- **24"**
- **30"**
- **36"**
- **54"**
- **Custom Table**

With **Flow Element** displayed, press ENT to display the selection. Use the UP or DOWN arrow to scroll through the **Flow Element** selections. When the desired flow element is displayed, press ENT.

If the flow element is changed, **Password?** will be displayed and your chosen password must be entered at this time. The unit will display the next menu item - **Flow Units**.

NOTE: If the Rectangular/End Contractions, Rectangular or Cipoletti is selected, the unit will prompt the user for the width of the flow element.

If the flow element for your application is not in the menu. select the custom table to configure a 51 point strapping table. Press ENT on display of Custom Table. Your password will be required, then **Table Name** will be displayed. Press ENT and input the table name via 2nd key. Refer to Page 16 for volume custom table configuration. Press ENT and read **Max. Table Span**. Press ENT and key in maximum span level. Press ENT once again and read **Max Table Value** and press ENT. Key in desired Max. table value (usually equal to the 100% value) and press ENT. **Table Units** will appear. Key in any appropriate units and press ENT. Input 51 points in the strapping table and press ENT. Refer to Page 16, Custom Table Entry for volume mode, for more information about the Custom Table Entry.

SYSTEM CONFIG MENU cont

Flow Units

- **Cubic Feet/Sec**
- **Cubic Feet/Min**
- **Cubic Feet /Hr**
- **Gallons/Min**
- **Gallons/Hr**
- **Million Gals/Day**
- **Cubic Meters/Sec**
- **Cubic Meters/Min**
- **Cubic Meters/Hr**
- **Liters/Min**
- **Liters/Hour**
- **MegaLiters/Day**

With Flow Units displayed, press ENT to display the selections. Use the UP or DOWN arrow to scroll through the Flow Units. When the desired flow unit is displayed, press ENT. The unit will display the next menu item - **Low Flow Cutoff.**

Flow and Level

Low Flow Cutoff

- **Cut __**

With **Low Flow Cutoff** displayed, press ENT to display Cut .

Low Flow Cutoff is the low level cutoff value in the chosen units of level. This will force a zero flow value when the level is at or below this **Low Cutoff Value**. Enter the value and press ENT. **Password?** will be displayed and your chosen password must be entered at this time. The unit will display the next menu item - **Level Limit.**

Press ENT to display the maximum level possible in the present units of measurement. Press ENT to display the next menu item - **Probe Lo.**

NOTES:

1. The Probe Lo and Probe Hi points are the most critical entries in the calibration procedure. Be sure of the values before they are entered.
2. The media level must be moved to accomplish this procedure. The Probe Lo and Probe Hi points can be entered in any order and can be easily changed in the future when the process level is at a much higher or lower point.
3. A minimum level change of two percent (2%) of flume flow (or 5pF, whichever is greater) will yield a valid calibration, however, a large change yields better accuracy.
4. The unit will automatically "time out" and revert back to the Default Display after four minutes if without a keystroke. Any information already entered will remain in memory. Simply reenter the System Config. section and enter any remaining data.

SYSTEM CONFIG MENU cont.

Flow and Level Measurement cont.

Press ENT to display current **Probe Lo** value. Enter the exact low level of the process medium. Use proper level units (inches, centimeters, etc.) previously selected. When the desired value is displayed, press ENT to store the value. **Supr Password?** will be displayed if the selection is changed. Enter your **Supr Password** at this time. Press ENT to accept the password and to display **Probe Hi.**

Move medium to a high point in the tank or simulate level change by moving the probe. Press ENT to display current **Probe Hi** value. Enter the exact level of the process medium. Use proper level units (inches, centimeters, etc.) previously selected. When the desired value is displayed, press ENT to store the value. **Supr Password?** will be displayed if the selection is changed. Enter your **Supr Password** at this time. Press ENT to accept the password and to display **Previous Menu.**

If the application utilizes two probes (dual probe, difference, or summing) continue to the calibration of **Probe 2**. Press ENT to display **Probe 2 Select.** Press ENT to display **Level Units** and begin calibration of Probe 2. Enter all values for Level Units, Mode Setup, Level Limit, Probe Lo, and Probe Hi points.

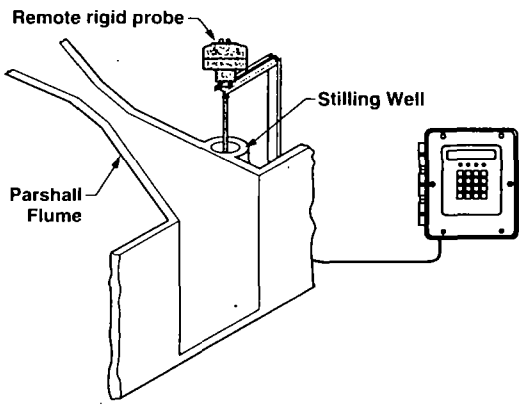

System Configuration is now complete. Proceed to I/O Configuration on Page 20 to continue Unit Configuration.

UNIT CONFIGURATION cont.

I/O CONFIGURATION MENU

This menu is used to configure relay settings, 4-20 mA current output, totalization, and communications parameters of the Series 801. The relays and 4-20 mA output can be set to control from Probe 1 (single probe), Probe 1 or Probe 2 (dual probes), or the combined signals of Probe 1 and 2 (difference or summing).

All relays can be configured for normal mode of action. (ie. high or low alarm). However the unit can be configured for dedicated relay use as follows:

Relay 1	Normal
Relay 2	Normal or Lead/Lag Pump Alternation (Used with Relay 1)
Relay 3	Normal or Dedicated Fault
Relay 4	Normal or Sampler Contact

Series 801

Measured Values

System Config

I/O Config

- **Relay Settings**
- **4-20 mA Settings**
- **Totalizer (Flow Mode Only)**
- **Comm Port Set up**
- **Previous Menu**

Relay Settings – Relays

- **Control w/Probe 1 (Dual Probes, Difference, and Summing Modes Only)**
- **Control w/Probe 2 (Dual Probes, Difference, and Summing Modes Only)**
- **Control w/Probe 1 & 2 (Difference and Summing Modes Only)**
- **Disabled**
- **Enabled**
  - **SetPoint** **LEVEL**
  - **VOLUME (Volume Mode Only)**
  - **FLOW (Flow Mode Only)**
    - **ON Setpoint**
    - **OFF Setpoint**
      - **ON Delay**
      - **OFF Delay**
      - **Fail-safe OFF**
      - **Fail-safe ON**
      - **Fail-safe Hold**

I/O CONFIGURATION MENU cont.

Please refer to the Relay Settings menu layout at bottom left for the configuration instructions below.

From the Default Display, press ENT to display **Measured Values**. Press the DOWN arrow to display **System Config**. Press the DOWN arrow once again to display **I/O Config**.

Press ENT once again to enter I/O Config and to display **Relay Settings**. Press ENT to display **Relay #**. Enter the relay number to be configured and press ENT.

If utilizing a **Single Probe,** press ENT to proceed to operating status.

If utilizing a **Dual Probe**, choose **Probe 1** or **Probe 2**. Press ENT to proceed to operating status.

If utilizing **Difference** or **Summing**, choose **Probe 1, Probe 2**, or **Probe 1 and 2**. Press ENT to proceed to operating status.

Use the UP or DOWN arrow to toggle between **Disabled** and **Enabled**. If enabled is chosen, **ON** will be displayed. Enter the **ON** setpoint value for that relay and press ENT. Enter the value at which the relay setpoint should turn off at the **OFF** display. Press ENT. If the 801 is in the flow or volume modes, the unit will prompt the user to set the relays in a level mode, volume mode, or flow mode.

If the ON and OFF setpoint values entered are identical, the display will read **ON>=Setpoint**. Use the UP or DOWN arrow to toggle between **"greater than or equal to"** and **"less than or equal to"** setpoint. Press ENT to display **ON Delay**. This is the number of seconds before activating or deactivating the relay contact closure. This delay is adjustable from 1 to 120 seconds. Press ENT after the value is entered. Follow the same procedure for the **OFF Delay**. Press ENT and **Fail-safe: OFF** will be displayed. OFF means the relay is released. In the event a failure occurs, ON means the relay is energized and HOLD means the relay is left in its present state. Use the UP or DOWN arrow to scroll through selections. Press ENT and **Relay Settings** will be displayed.

If **Lead/Lag** is chosen under Relay 2, Relays 1 and 2 will be utilized in the Lead/Lag sequence.

If **Fault** is selected for Relay 3, the user will be prompted to select the faults that control Relay 3. Select between Enable and Disable for the displayed Fault by using the UP or DOWN arrow. Press ENT to continue to next item.

With **Fault Action** in the display, press ENT. Choose the operation of Relay 3 on the faults; **Energize** or **De-Energize**. With **Previous Menu** on the display, press ENT.

Relay #3

- **Normal**
- **Fault**
  - **Preamp 1**
  - **Preamp 2**
  - **Loop Flt**
  - **Params**
  - **System**
  - **Fault Action**
    - **Energized**
    - **De-Energized**
  - **Previous Menu**

I/O CONFIGURATION MENU cont.

Password? will be displayed if any of the selections have been changed. Your chosen password must be entered at this time. The unit will display the current menu item - **Relay Settings.**

Refer to Page 7 on selection of a General or Supervisory Password.

Press the DOWN arrow to proceed to **4-20 mA Settings**.

4-20 mA Settings

- **Control w/Probe 1**
  (Dual Probes, Difference, and Summing Modes Only)
- **Control w/Probe 2**
  (Dual Probes, Difference, and Summing Modes Only)
- **Control w/Probe 1 & 2**
  (Difference and Summing Modes Only)
- **4:**
- **20:**
- **Fail-safe: 4 mA**
  20 mA
  Hold

With **4-20 mA Settings** displayed, press ENT to display **Setpoint LEVEL, Setpoint FLOW** or **Setpoint VOLUME**, depending on the mode that the unit is in.

If utilizing a **Single Probe,** press ENT to proceed to 4-20 mA settings.

If utilizing a **Dual Probe**, choose **Probe 1** or **Probe 2**. Press ENT to proceed to 4-20 mA settings.

If utilizing **Difference** or **Summing**, choose **Probe 1, Probe 2**, or **Probe 1 and 2**. Press ENT to proceed to 4-20 mA settings.

If level only is selected as the mode of operation, the display will read **4:**___ and **20:** ___. In addition, if the Volume or Flow modes are selected, the 4 and 20 points can be entered as volume or flow units. Enter the value desired for 4 mA and press ENT. **20:0** will be displayed. Enter the value desired for the 20 mA. The 4-20 mA scale may be set anywhere up to the Level Limit value. **Failsafe**: and the current condition is displayed: **4 mA, 20 mA,** or **Hold**. The fail-safe is the output loop current in the event any fault condition. **Hold:** Current loop remains at last value, **4mA**: Current loop goes to 4 mA, or **20 mA**: Current loop goes to 20 mA. Use the UP/DOWN arrows to scroll to the desired fail-safe condition and press ENT.

Password? will be displayed and your chosen password must be entered at this time. Press ENT, the unit will display the current menu item - **4-20 mA Settings**.

I/O CONFIGURATION MENU cont.

Totalizer (Flow Mode Only)

- **Control w/Probe 1**
  (Dual Probes, Difference, and Summing Modes Only)
- **Control w/Probe 2**
  (Dual Probes, Difference, and Summing Modes Only)
- **Control w/Probe 1 & 2**
  (Difference and Summing Modes Only)
- **Hardware**
  Tot___
- **Software**
  Tot___

This is the weight of each count of flow increment shown on the mechanical totalizer.

If utilizing a **Single Probe,** press ENT to proceed to Totalizer settings.

If utilizing a **Dual Probe**, choose **Probe 1** or **Probe 2**. Press ENT to proceed to Totalizer settings.

If utilizing **Differential** or **Summing**, choose **Probe 1, Probe 2**, or **Probe 1 and 2**. Press ENT to proceed to Totalizer settings.

With **Totalizer** displayed, press ENT to display **Hardware**. Press ENT and **Tot 0 cuft** is displayed. Enter the value at which each digit changes based on the chosen units of flow and press ENT: the unit will display **Password?** and your chosen password must be entered at this time. Press ENT and **Tot 0 cuft** will be displayed. Enter the value desired at which the software totalizer changes each increment and press ENT.

The unit will display **Software**. Press the DOWN arrow to scroll to display **Comm Port Set Up**.

Comm Port Set Up

- **Laptop Rate**
- **MagNet Rate**
- **MagNet Addr**
- **Previous Menu**

With **Comm Port Set Up** displayed, press ENT to display **Laptop Rate 300**. Use the UP/DOWN arrow to scroll to the desired rate and press ENT.

NOTE: The baud rate selected must match the baud rate setting from the communications program of the laptop being used in the downloading scheme.

The unit will display **MagNet Rate 300**. Use the UP/DOWN arrow to scroll to the desired rate. Press ENT at the desired rate and **MagNet Address** will be displayed. Enter the number assigned to the unit in the field at which the MagNet software is to use as the address location and press ENT.

Password? will be displayed and your chosen password must be entered at this time. Press ENT, and the unit will display **Comm Port Set Up**. Use the DOWN arrow to scroll to **Previous Menu** and press ENT. Press the DOWN arrow to scroll to the next menu section - **Calibration**.

UNIT CONFIGURATION cont.

CALIBRATION MENU

This menu is used to calibrate non-control parameters of the Series 801. Each menu item will prompt for **Sup Pswd?** as a protection against unauthorized changes.

Series 801

Measured Values
System Config
I/O Config
Calibration

- **Damping**
- **Set Clock**
- **Enter Tag**
- **Default Display**
- **Calculation**
- **Change Password**
- **Change Sup Pass**
- **Previous Menu**

Damping

This allows for smoothing of the 4-20 mA output signal to achieve a stable display and output under turbulent level conditions. Values of 0 to 50 are available. Increasing the value will increase the damping and slow the response. The factory setting of 10 should be utilized until an unstable display or output is observed.

Set Clock

This allows for changing of the date and time on the smartwatch option. Unit prompts for:

Month?
Date?
Year?
Hour?
Minute?

After entering these values, in military format, the unit prompts **ENTer to set** and then asks for the supervisory password.

Enter Tag

This menu shows the present tag - **Magnetrol 801**. (If utilizing multiple probes, Probe 1 Select will be displayed. A tag may be entered for each probe).

If desired, this tag can be changed by using the UP or DOWN arrows to scan through characters and press ENT to change the character at that location in the tag. Pressing the 2nd key will start the scrolling of the available characters. Press ENT when the desired character is shown.

CALIBRATION MENU cont.

Default Display

This menu allows for a choice of items displayed during normal operation. The following items may be toggled **ENABLED/DISABLED** using the UP and DOWN arrow:

Probe 1 Tag
P1 Level
P1 Vol/Flow
Probe 2 Tag
P2 Level
P2 Vol/Flow
Comb. Level
Comb. Vol/Flow
Loop
Clock
Calculation
Totalizer
Previous Menu

The last menu item is **Previous Menu**. If any change was made in the default display, ENT at this point will cause the unit to prompt for the **Sup Pswd**.

Calculation

Press ENT to display **Existing Test Is**. Press ENT again to display **Text:** ___ . Enter text by using UP or DOWN arrow keys, pressing the 2nd key and pressing ENT at each entry. The display will then read **MULT:**. This is the multiplier used in the calculation. Your level, flow or volume reading is multiplied by this value.

NOTE: The calculation is only for display purposes, not control of relays or loop current.

Change Password

Allows for a change of password. Requires the Sup Pswd.

Change Sup Password

Allows for a change of Sup Pswd. Requires the Sup Pswd.

Previous Menu

Returns to the current menu, **Calibration**.

Press DOWN arrow to proceed to **Diagnostics**.

DIAGNOSTICS MENU

This menu is used to provide the user with testing the functionality and providing useful information for troubleshooting of the unit.

Series 801

Measured Values

System Config.

I/O Config

Calibration

Diagnostics

- **Test Relays**
- **Test 4-20 mA Loop**
- **Signal Values**
- **View Version#**
- **Extended Errors**
- **Previous Menu**

Test Relays

This menu provides a controlled contact closure for each relay to test its integrity. A password is required.

Test 4-20 mA Loop

Once the desired output loop current value is entered on the display, the Series 801 will drive the given loop current to an external device for calibration purposes.

View Version

This is the version number of the software in the 801.

Extended Errors

Provides further information for the factory personnel in troubleshooting.

An eight digit code will be displayed by pressing ENT at the Extended Errors prompt. By reading this code from right to left, information on both probe circuits can be obtained. The first four bits (starting at the right) are associated with probe circuit 1, and the second set of four bits is associated with probe circuit 2, as shown below.

0 0 0 0	0 0 0 0
Probe 2	Probe 1

All zeros will appear on a properly functioning Series 801. A one (1) will appear when an error is detected.

DIAGNOSTICS MENU cont.

Extended Errors cont.

BIT 4 3 2 1

0 0 0 0

- **Internal Oscillator Test Failure**
- **Open Probe Test Failure**
- **General Probe Failure**
- **Signal Failure**

BIT 1: A one (1) will appear if the Series 801 fails the internal oscillator test. Consult factory. The remote probe electronics may be defective.

BIT 2: A one (1) will appear if the Series 801 fails the open probe test. Ensure proper connection between the white wire assembly and the probe screw terminal. Consult factory if unsuccessful.

BIT 3: A one (1) will appear in this position in conjunction with BITS 1 and 2 whenever a probe related error is detected.

BIT 4: A one (1) will appear in this position if the signal between the probe electronics and transmitter is out of range. Ensure proper connection and polarity of wiring between probe housing and transmitter.

Press ENT. **Extended Errors** will be displayed. Press the DOWN arrow to display Previous Menu. Ent will display the current menu, Diagnostics. Press the DOWN arrow to display LapTop.

LAPTOP MENU

This menu is used to enter the start and end day range for downloading of stored data log for the Series 801.

Series 801

Measured Values
System Config.
I/O Config
Calibration
Diagnostics

Laptop

- **STRT**
- **END**

With **LapTop** displayed, press ENT to display **STRT** ___ . Enter a number of the day of data to be downloaded. Press ENT and END will appear. Enter an ending day. Press ENT and **Laptop** will be displayed. If the laptop is connected for RS-232 and the baud rate is compatible as set in the **I/O Config**, the unit will begin to download the start /end day range. Please note: this is an updating 30 day format. It will download the minimum, maximum (at times of occurrence), and total flow data for selected days.

Refer to Page 5 for Wiring information.

Any P.C. communication program may be used to capture this data. Start the communications program. Start an ASCII download and follow the above procedure. Refer to your communications program documentation if needed.

TROUBLESHOOTING

These are troubleshooting displays which may appear on the Series 801.

SYMPTOM	PROBLEM	SOLUTION
CAP TOO LO	The probe high point being entered has a lower capacitance than the present lo point.	Raise the probe high point being entered.
CAP TOO HI	The probe low point being entered has a higher capacitance than the present hi point.	Lower the probe low point being entered.
COMM PARAM FAIL!	The configuration parameters for the communications port are corrupt.	Press **ENT** to continue. This will load default values for the communication parameters The communication parameters should be checked to see that they match your configuration. This is accomplished through the I/O Config menu.
MAIN PARAM FAIL!	The main parameters which store probe lo/probe hi are corrupt.	Press **ENT** to continue. This will load default values for the main parameters. All of the items in the System Config menu need to be verified.
STRAP TBL FAIL!	There is an error in the custom strapping table entry.	Press **ENT** to continue. The table is cleared. If a custom table is not being used then this error can be ignored. If you are using a custom table, the table has to be re-entered.
RLY 1 PARAM FAIL!	The parameters for Relay 1 are corrupt.	Press **ENT** to continue. The relay is disabled and the settings are set to default values. Reconfigure the relay from the I/O Config menu.
RLY 2 PARAM FAIL!	The parameters for Relay 2 are corrupt.	Press **ENT** to continue. The relay is disabled and the settings are set to default values. Reconfigure the relay from the I/O Config menu.
RLY 3 PARAM FAIL!	The parameters for Relay 3 are corrupt.	Press **ENT** to continue. The relay is disabled and the settings are set to default values. Reconfigure the relay from the I/O Config menu.
RLY 4 PARAM FAIL!	The parameters for Relay 4 are corrupt.	Press **ENT** to continue. The relay is disabled. and the settings are set to default values. Reconfigure the relay from the I/O Config menu.
LOOP PARAM FAIL!	The parameters for the 4-20 mA loop are corrupt.	Press **ENT** to continue. The loop is disabled and the settings are set to default values. Reconfigure the relay from the I/O Config menu.
CALC PARAM FAIL!	The calculation parameters are corrupt.	Press **ENT** to continue. New values need to be entered for the calculation. This is accomplished from the Calibration menu.
PASSWORD LOST!	The passwords are corrupt.	Press **ENT** to continue. Enter new passwords from the Calibration menu.
DATA LOG LOST!	The data log is corrupt.	Press **ENT** to continue. The data log is cleared.
P.O.S.T. FAILED!	Power on self test failed. Microprocessor internal register was not set correctly on power up. The software will attempt to set the register to the proper value.	Turn unit off and apply power again. If the error disappears, it was able to set the register to the proper value and will function properly
OPERATION DENIED	Manual operation of relays or current loop is not allowed because the proper password was not entered.	Retry with the proper password.
OUT OF RANGE	The value that was entered was not in an acceptable range.	Re-enter a value within the proper limits.
CANNOT BE EQUAL!	The value for the 4 mA point and the 20 mA point cannot be equal.	Choose the values that are not the same and re-enter.
INVALID LEAD/LAG	Setting any relays other than relay 1 and 2 for lead/lag operation is not allowed.	Check that both relays 1 and 2 are enabled and that the setpoints are proper for lead/lag operation.
PASSWORD INVALID	The password entered is not valid.	Retry the previous operation and enter the proper password.

TROUBLESHOOTING cont.

SYMPTOM	PROBLEM	SOLUTION
CCO/PROBE (1) or (2) FAIL	Various	Consult Extended Errors section on page 23 of this manual.
NO CLOCK PRESENT	The real time clock was not found on the board. No data logging or time sampling is allowed.	If you need the real time functions, contact the factory to determine if your unit was ordered with the data logging option.
LOOP > 20 mA	The calculated value for the loop output is greater than 20 mA. The loop output will be in its fail-safe mode.	If the level is within a normal operating range, adjust the loop parameters to allow proper tracking of the level. If the level is out of the normal 4-20 mA range, then correct the problem with the level.
LOOP < 4 mA	The calculated value for the loop output is less than 4 mA. The loop output will be in its fail-safe mode.	If the level is within a normal operating range, adjust the loop parameters to allow proper tracking of the level. If the level is out of the normal 4-20 mA range, then correct the problem with the level.
DISPLAY IS TOO DIM OR TOO LIGHT		Turn R11(contrast adjustment) clockwise to darken the display or counterclockwise to lighten the display until the desired contrast is obtained.

SPECIFICATIONS

ELECTRICAL SPECIFICATIONS

Description		Specification
Supply Voltage		120 VAC, 50-60 Hz 240 VAC, 50-60 Hz 24 VDC
Output	Analog	4-20 mA (Isolated), reversible 1000 ohms max. loop resistance
	Digital	RS-232, RS-485
	Range	5 pF minimum 50,000 pF maximum
Accuracy		Better than 1.0% of span
Repeatability		± .1%
Linearity		± .5%
Data	Entry	Full numeric keypad
	Indication	16 character alphanumeric LCD display
Relays 4 SPDT	AC	10A @ 120/240 VAC resistive
	DC	10A @ 30 VDC resistive
		0.5A @ 125 VDC resistive
	Set Point Range	0-50,000 pF
	Differential Range	0.50 pF minimum, 50,000 pF maximum
	Time Delay	0-120 Seconds Level Rising, Falling, Both

Description	Specification
Power Consumption	15 VA maximum
Humidity	99% Non-condensing (electronics)
Operating Pressure and Temperature	Dependent upon probe selection See Bulletin 50-125.
Electrostatic Discharge Protection	Per IEC specification 801-2.
Response Time	0.5 to approx. 2 seconds, depending upon probe capacitance and damping value
Ambient Temperature (Electronics)	-20°F to +160°F without heater (-29°C to +71°C) and thermostat
	-40°F to +160°F with heater and (-40°C to +71°C) thermostat
Temperature Coefficient of Set Point -20°F to +160°F (-29°C to +71°C)	± .01%/degree F (± .018%/degree C)
Maximum Remote Mount Distance	Standard: 5000 Feet (1500 M)
	Intrinsically Safe: 800 Feet (240 M)

SPECIFICATIONS cont.

AGENCY APPROVALS

Agency	Model No.	Approval
FM*	801-XX31-N4X	Non-hazardous indoor/outdoor NEMA 4X IP65
	801-XX34-N4X	Intrinsically Safe Remote (indoor/outdoor, NEMA 4X IP65 when installed per Magnetrol drawing 99-5043-001 Class I, II & III, Div. 1 Groups A, B, C, D, E, F, & G NEMA 4X housing mounted in non-hazardous areas

CAUTION: Agency ratings are based partially on the proper probe selection. Refer to the chart at the right for approved combinations.

Agency	Model No.	Approval
	801-XX31-N4X	Non-hazardous indoor/outdoor TYPE 4X
	CSA* 801-XX34-N4X	Intrinsically Safe Remote indoor/outdoor TYPE 4X when installed per Magnetrol drawing 99-5043-001 Class I, II & III Groups A, B, C, D, E, F, & G Enclosure TYPE 4X mounted in non-hazardous areas **NOTE**: For Groups E & F - insulated probes must be used.

* Approvals pending

7th Digit in Elect. Model No.	Approved Probes
1,4	All probes

INTRINSIC SAFETY

INTRINSIC SAFETY

Models 801-XX34-N4X are pending FM and CSA agency approval for use as an intrinsically safe circuit.

HAZARDOUS LOCATION
Intrinsically Safe
Class I, II, III, Div. 1,
Groups A, B, C, D, E, F, G

NON-HAZARDOUS LOCATION

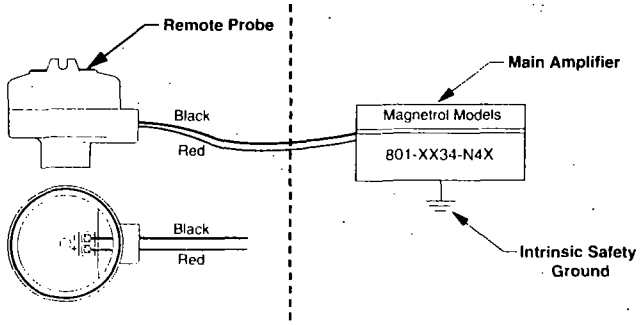

Intrinsically Safe/Sécurité Intrinsèque

WARNING: Substitution of components may impair intrinsic safety.

AVERTISSEMENT: La substitution de composants peut compomettre la sécurité intrinsèque.

NOTES:

1. The NEC must be followed when installing this equipment.
2. For installation guidance, see ANSI/ISA RP 12.6.
3. The resistance between the associated apparatus intrinsic safety ground terminal and earth must be less than one ohm.
4. Non-hazardous area equipment connected to the associated apparatus should not use or generate more than 250 volts.
5. The total cable series inductance and shunt capacitance between the associated apparatus and the remote probe must not exceed the indicated values for applicable groups:

Group	Max. Capacitance	Max. Inductance
AB	0.13 µF	0.47 mH
CE	0.92 µF	1.97 mH
DFG	2.89 µF	3.53 mH

SPECIFICATIONS cont.

DIMENSIONAL SPECIFICATIONS inches (mm)

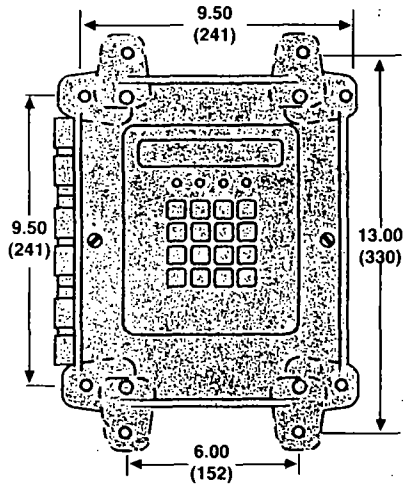

Electronics Housing

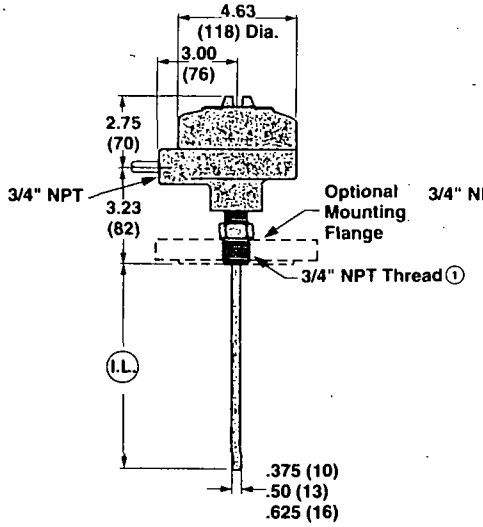

Remote Mount/Standard Rigid Probe

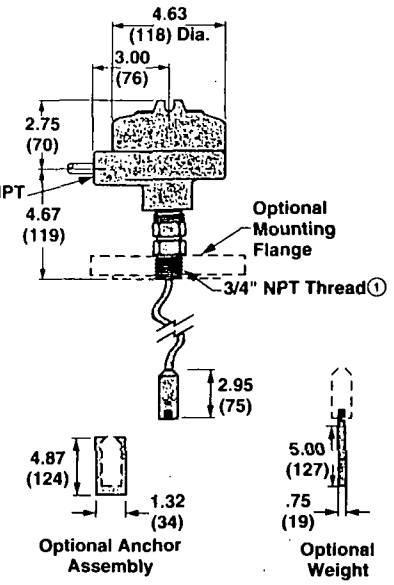

Remote Mount/Flexible Probe

NOTE: ① Standard process connection is $^{3}/_{4}$" NPT. Consult probe brochure (50-125) for flange and other probe connections.

REPLACEMENT PARTS

Item	Description		Part Number
1	NEMA 4X Door, LCD Display, and Keypad		Consult Factory
2	Main P.C. Board	120 VAC	030-3537-006
		120 VAC with Heater	Consult Factory
		240 VAC	030-3537-008
		240 VAC with Heater	Consult Factory
		24 VDC	Consult Factory
3	Daughter P.C. Board	Standard	030-2207-001
		Intrinsically Safe	030-2207-002
4	Display P.C. Board		030-3539-001
5	Enclosure Gasket		012-1606-001
6	Sensor Base NEMA 4X/7/9		004-9104-001
7	Sensor Cover NEMA 4X/7/9		004-9105-001
8	O-ring		012-2101-345
9	Preamplifier Assembly		030-2210-001
10	Shielded Twisted Pair (Up to 5000 feet [1500 meters])		009-7146-001
	Enclosure Accessories Kit (Includes Mounting feet, hardware and hinges)		089-5210-001

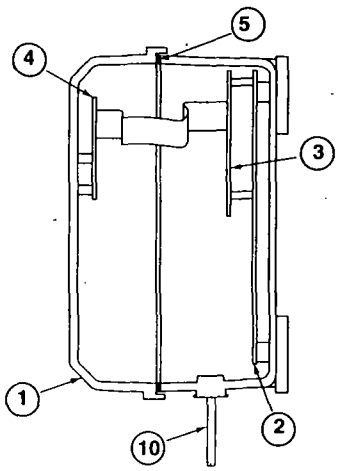

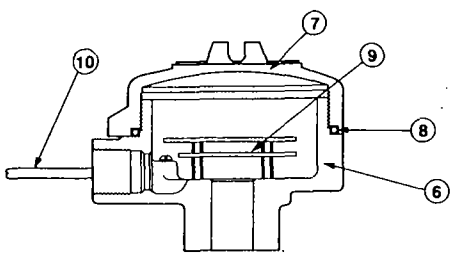

IMPORTANT

PRODUCT WARRANTY

All Magnetrol electronic level and flow controls are warranted free of defects in materials or workmanship for one full year from the date of original factory shipment.

If returned within the warranty period; and, upon factory inspection of the control, the cause of the claim is determined to be covered under the warranty; then, Magnetrol will repair or replace the control at no cost to the purchaser (or owner) other than transportation.

Magnetrol shall not be liable for misapplication, labor claims, direct or consequential damage or expense arising from the installation or use of equipment. There are no other warranties expressed or implied, except special written warranties covering some Magnetrol products.

QUALITY ASSURANCE

The quality assurance system in place at Magnetrol guarantees the highest level of quality throughout the company. Magnetrol is committed to providing full customer satisfaction both in quality products and quality service.

Magnetrol's quality assurance system is registered to ISO 9001 and Z299.1 affirming its commitment to known international quality standards providing the strongest assurance of product/service quality available.

ASSURED QUALITY & SERVICE COST LESS

SERVICE POLICY

Owners of Magnetrol controls may request the return of a control or any part of a control for complete rebuilding or replacement. They will be rebuilt or replaced promptly. Controls returned under our service policy must be returned by Prepaid transportation. Magnetrol International will repair or replace the control at no cost to the purchaser (or owner) other than transportation if:

a. Returned within the warranty period; and
b. The factory inspection finds the cause of the claim to be covered under the warranty.

If the trouble is the result of conditions beyond our control; or, is NOT covered by the warranty, there will be charges for labor and the parts required to rebuild or replace the equipment.

In some cases it may be expedient to ship replacement parts; or, in extreme cases a complete new control, to replace the original equipment before it is returned. If this is desired, notify the factory of both the model and serial numbers of the control to be replaced. In such cases, credit for the materials returned will be determined on the basis of the applicability of our warranty.

No claims for misapplication, labor, direct or consequential damage will be allowed.

RETURN MATERIAL PROCEDURE

So that we may efficiently process any materials that are returned, it is essential that a "Return Material Authorization" (RMA) number be obtained from the factory, prior to the material's return. This is available through Magnetrol's local representative or by contacting the factory. Please supply the following information:

1. Company Name
2. Description of Material
3. Serial Number
4. Reason for Return
5. Application

Any unit that was used in a process must be properly cleaned in accordance with OSHA standards, before it is returned to the factory.

A Material Safety Data Sheet (MSDS) must accompany material that was used in any media.

All shipments returned to the factory must be by prepaid transportation.

All replacements will be shipped F.O.B. factory.

Magnetrol

5300 Belmont Road • Downers Grove, Illinois 60515-4499 • (708) 969-4000 • Fax 708-969-9489
6291 Dorman Road • Mississauga, Ontario L4V-1H2 • Phone: (905) 678-2720 • Fax 905-678-7407
Heikensstraat 6 • B 9240 Zele, Belgium • Tel. 052 45.11.11 • Telex 25944 • Fax 052 45.09.93
Regent Business Ctr., Jubilee Rd. • Burgess Hill, Sussex RH15 9TL U.K. • Tel: 0444-871313 • Fax 0444-871317

BULLETIN: 50-624.0
EFFECTIVE: February 1994

SECTION 6

DREXELBROOK
Engineering Company

DATE April 3, 1997
PAGE 1 OF 1

TO Heritage Environmental
1175 Western Dr.
Indianapolis, IN 46231

CC (Letter Only):
TO

ATTN. Wayne Mitchell
P.O. # 66-01-2828
JOB
D.E. # 392419

ATTN:

_____ PRODUCTION IS BEING HELD PENDING YOUR RELEASE.
To ensure timely delivery and avoid price escalation, please approve and return one of the signed copy of the enclosed drawings.
THIS APPROVAL WILL RELEASE YOUR EQUIPMENT FOR PRODUCTION UNLESS YOU INDICATE OTHERWISE.

__X__ Drawings for record purposes only.

GENTLEMEN:

Enclosed, please find, requested data:

Q	SHEET NUMBER	DATA DESCRIPTION
4 S	3-21-97-PLH-1	Mounting & Wiring (1 Sepia)
S	3-21-97-PLH-2 Rev. #1	Mounting & Wiring (1 Sepia)
S	3-21-97-PLH-3 Rev. #1	Mounting & Wiring (1 Sepia)
S	3-21-97-PLH-4	Mounting & Wiring (1 Sepia)
S	3-21-97-PLH-5 Rev. #1	Mounting & Wiring (1 Sepia)
S	3-21-97-PLH-6	Recommended Spare Parts List (1 Sepia)
S	3-21-97-PLH-7	Recommended Spare Parts List (1 Sepia)
2 S	303-0300-000-LM	Instruction Manual (For Info)
Note: Rev. #1 to change counter. Also remove reference to mounting track & ground plate.		
Note: Final Documentation Certified "As Built".		

Yours truly,
DREXELBROOK ENGINEERING CO.

Patricia L. Hofmeister

Patricia L. Hofmeister

cc. Rep(s): TECI/MACH/TEIN

205 Keith Valley Road Tel. (215) 674-1234
Horsham, PA 19044-1499 Fax (215) 674-2731

NOTES:
1. MATERIAL: FIBERGLASS
2. ENCLOSURE: NEMA 4X
3. COVER GASKET MATERIAL: SILICONE

.. TAG:
FQI-115A

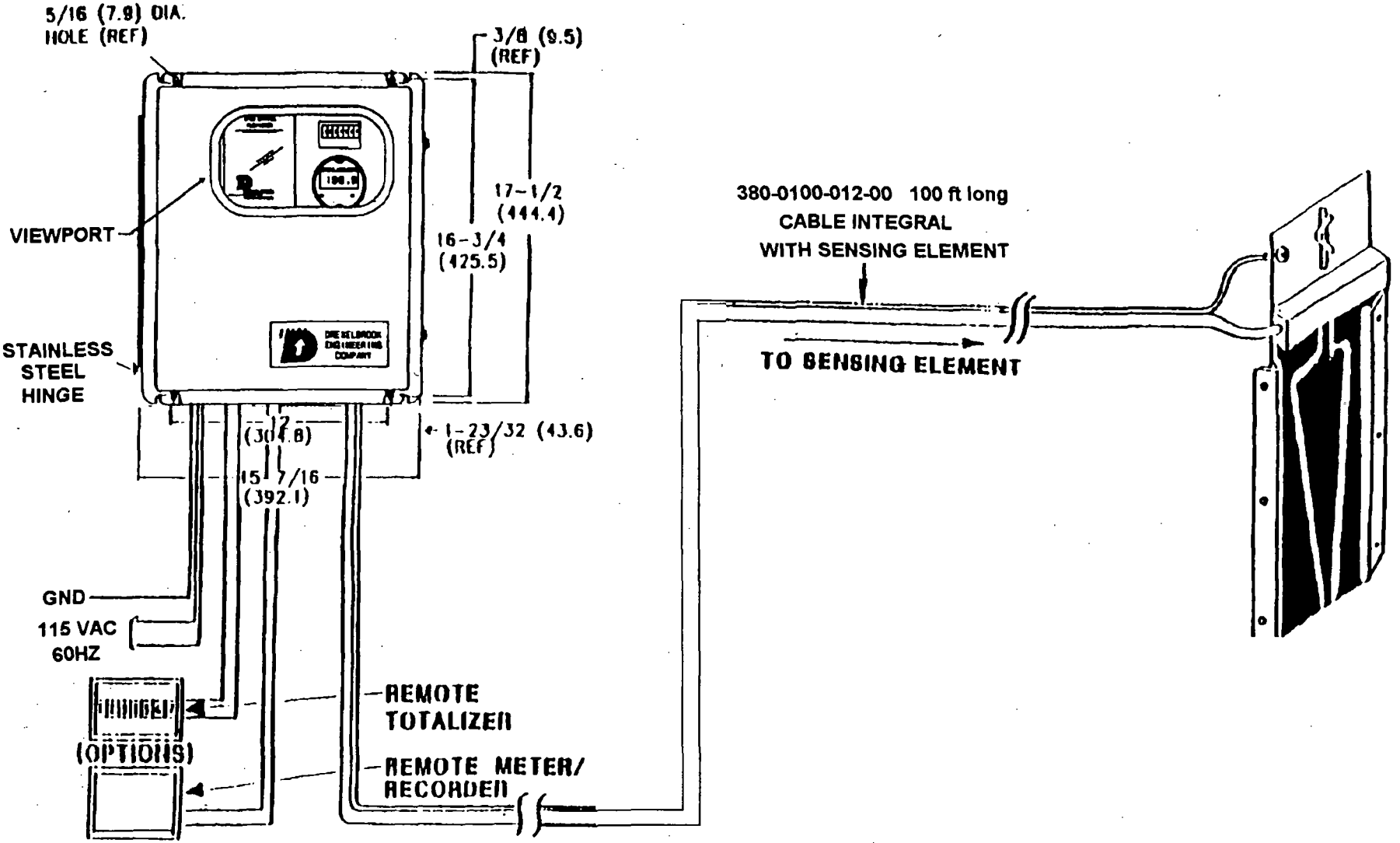

DREXELBROOK ENGINEERING CO. • HORSHAM, PA. 19044 •

COPYRIGHT 1980 DREXELBROOK ENG. CO.

CERTIFIED by PLH
PO# 66-01-2828
ENG:
USER:
HERITAGE ENVIRONMENTAL
DE# 392419

MOUNTING FOR
303-0341-017-30C0
FLUSH FLOW
MEASURING SYSTEM

SCALE NONE
UNLESS OTHERWISE STATED ALL DIMENSIONS
3-21-97-PLH-1

DR. CJP
CHK. EAD
APP'D

2 ISSUE
11-80-503 ENG
DATE

S.S. TAG:
FQI-115A

334-3-2 DREXELBROOK INTEGRATOR

334-0002-008
7 DIGIT NON RESETTABLE
TOTALIZER

370-4010-001-DIGITAL METER

401-13-31 POWER SUPPLY

TERMINALS FOR
ADDITIONAL CUSTOMER
LOAD OPTIONS

1 2 3 4 5 6 7 8 9 10

334-2-9 DREXELBROOK
SAMPLER ACTIVATOR

408-6200-011 15HZ
TRANSMITTER

SEE DETAIL 1

(CONTACT CLOSURE
PROVIDED)

4-20 MA
OUTPUT
REMOVE JUMPER

115 VAC
60 HZ.

24 VDC PULSE TO
REMOTE TOTALIZER

377-4-1

7 8 9

TO SENSING
ELEMENT

SAMPLER
ACTIVATION
CONTROL

DETAIL 1

*TRADEMARK D.E. CO.

DREXELBROOK ENGINEERING CO. ● HORSHAM, PA. 19044 ● COPYRIGHT 1985
DREXELBROOK ENG. CO.

CERTIFIED by PLH
PO# 66-01-2828
ENG:
USER:
HERITAGE
ENVIRONMENTAL
DE# 392419

303-0341-017-30C0
WIRING FOR FLUSH FLOW
MEASURING SYSTEM

SCALE NONE
UNLESS OTHERWISE STATED ALL DIMENSIONS IN INCHES (MM)
TOLERANCES: UNLESS OTHERWISE STATED
DECIMAL ±.005 (.13)
FRACTION ±1/64 (.4)
ANGLE ±2°
DR. RWH 2-19-86
CHK.
APP'D

3-21-97-PLH-2-REV#1

ISSUE	EDO	DATE
2	5-90-286	6-90
1	2-86-282	4-86

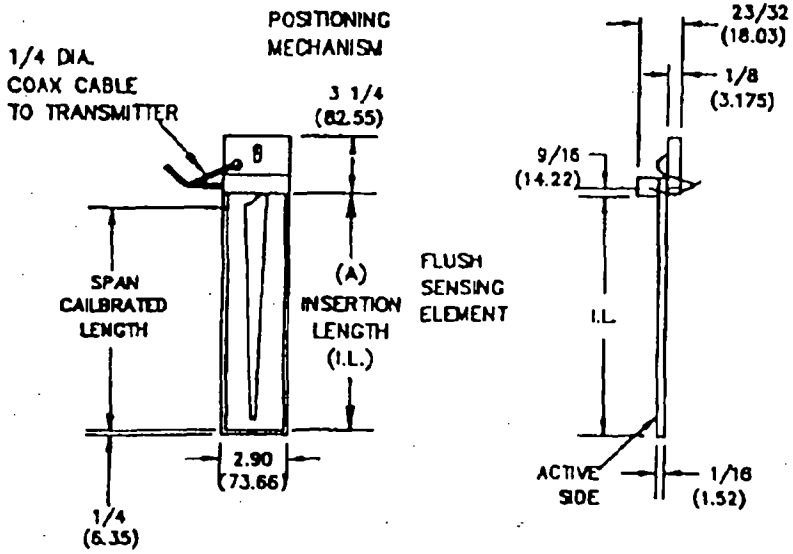

FLUME SIZE (IN)	SENSING ELEMENT (STD) MODEL NO.	(A) I.L. (IN)	SPAN RANGE (IN)		FLOW RANGE (GPM)	
PARSHALL FLUMES			MIN	MAX	MIN	MAX
2	700-703-338	12	0-2	0-6	0-19	0-103

S.S. TAG:

FE-115

NOTES:
1. ALL INSERTION LENGTH (I.L.) DIMENSIONS ARE ±1/4 INCH.

CERTIFIED by PLH
PO# 66-01-2828
ENG:
USER: HERITAGE ENVIRONMENTAL
DE# 392419

ISS.	EDO/DSR NO.	APP'D	DATE
3	3-93-163	[illegible]	4-8-93
2	5-90-250	JRB	10-14-91
1	12-88-246	JRB	1-89

COPYRIGHT 1993
DREXELBROOK ENG CO.

SCALE NONE
DR. JL 4-7-93
CK. [illegible]

DREXELBROOK
Engineering Company
303 KEITH VALLEY RD
HORSHAM, PA 19044-9988
215-674-1234
FAX 215-674-2731

OPEN CHANNEL FLOW FLUSH SENSING ELEMENTS FOR PARSHALL FLUMES.

700-0703-338-D0

3-21-97-PLH-3-REV#1

S.S. TAG:

FE-115

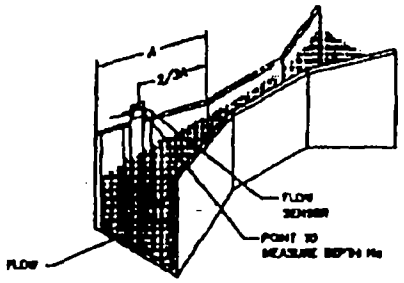

FIG. 1 – PARSHALL FLUME SENSING ELEMENT LOCATION

FLUME SIZE W (IN)	A (IN)	2A/3 (IN)	FLUME SIZE W (IN)	A (IN)	2A/3 (IN)
1	14 1/4	9 1/2	24	60	40
2	18 1/4	12 7/8	36	66	44
3	18 3/8	12 1/4	48	72	48
6	24 7/16	16 3/16	60	78	52
9	34 5/8	23 1/8	72	84	56
12	54	36	84	90	60
18	57	38	96	96	64

TABLE 1 – PARSHALL FLUME SENSING ELEMENT LOCATION

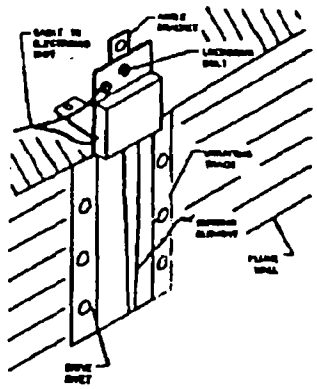

FIG. 3 – STANDARD MOUNTING

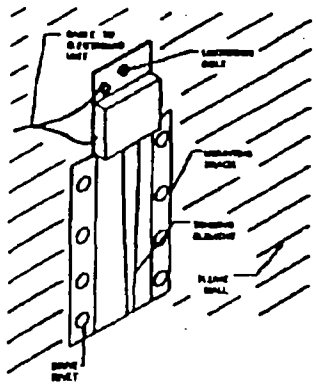

FIG. 4 – MOUNTING IN HIGH WALLED FLUME

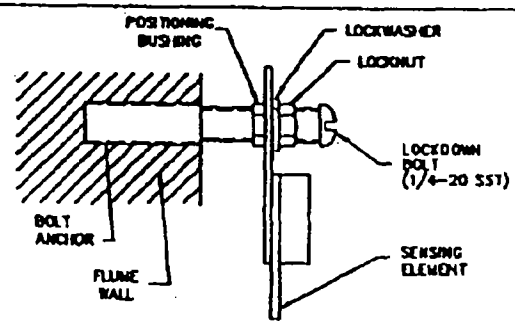

FIG. 5 – ANCHORING IN A HIGH WALLED FLUME

PROCEDURE

THE TRACK IS MOUNTED TO THE WALL OF THE PRIMARY MEASURING DEVICE USING THE DRIVE RIVETS SUPPLIED. FOR LOCATION OF THE SENSING ELEMENT, SEE FIG. 1 AND TABLE 1 FOR PARSHALL FLUMES AND FIG. 2 FOR RECTANGULAR WEIRS.

- MARK THE RIVET HOLES USING THE MOUNTING TRACK AS A TEMPLATE.
- DRILL HOLES 1/4 INCH IN DIA. APPROX. 1 INCH DEEP.
- ONCE MOUNTING TRACK IS IN PLACE, SLIDE SENSING ELEMENT INTO TRACK WITH SCALE SIDE FACING THE STREAM.
- MOUNT ANGLE BRACKET TO TOP EDGE OF FLUME OR WEIR AS SHOWN IN FIG. 3.
- WITH ANGLE BRACKET PROPERLY IN PLACE, FASTEN SENSING ELEMENT TO ANGLE BRACKET WITH LOCKDOWN BOLT.
- TO ENSURE PROPER VERTICAL POSITIONING OF THE SENSING ELEMENT, LOOSEN THE NUT ON THE POSITIONING BUSHING (SEE FIG. 5) AND ADJUST SENSING ELEMENT TO POSTION TIP OF THE SENSOR AT THE ZERO FLOW LEVEL. RE-TIGHTEN NUT AND CHECK THAT TIP IS STILL AT ZERO FLOW LEVEL.
- FOR HIGH-WALLED FLUMES, WHEN ANGLE BRACKET IS NOT USED, DRILL 1/2 INCH HOLE USING SENSING ELEMENT SLOT AS A TEMPLATE (SEE FIG. 4). INSTALL EXPANDING WALL ANCHOR TO WALL OF FLOW CHANNEL. SECURE THE SENSING ELEMENT IN PLACE BY FASTENING THE LOCKDOWN BOLT TO THE WALL ANCHOR.

CERTIFIED by PLH
PO# 66-01-2828
ENG:
USER: HERITAGE ENVIRONMENTAL
DE# 392419

ISS.	EDO/DSR NO.	APP'D	DATE
3	3-93-163	[illegible]	4-7-93
2	5-90-250	JRB	0-14-91
1	12-88-246	JRB	1-24-89

COPYRIGHT 1993
DREXELBROOK ENG CO.

SCALE NONE
UNLESS OTHERWISE STATED ALL DIMENSIONS IN INCHES (mm)
DR. JL 4-7-93
CK. ASK

DREXELBROOK
Engineering Company
5 KEITH VALLEY RD
HORSHAM, PA 19044-9988
215-674-1234
FAX 215-674-2731

OPEN CHANNEL FLOW
FLUSH SENSING ELEMENTS
FOR PARSHALL FLUMES

700-0703-338-D0

3-21-97-PLH-4

TYPICAL MOUNTING INSTRUCTIONS

TRACK MOUNTING FOR FLUMES WITHOUT MOLDED IN TRACK

1. LOCATE MOUNTING TRACK RIVET HOLES BY USING MOUNTING TRACK AS A TEMPLATE.
2. DRILL HOLES 1/4" DIA. (6.35 MM).
3. MOUNT THE MOUNTING TRACK WITH DRIVE RIVETS SUPPLIED.
4. SLIDE SENSING ELEMENT INTO MOUNTING TRACK.

SENSING ELEMENT MOUNTING WEIRS AND STANDARD FLUMES

1. MOUNT ANGLE BRACKET SUPPLIED USING EXTRA DRIVE RIVETS (SUPPLIED), OR AS DESIRED.
2. INSTALL SENSING ELEMENT AND LOCK IN PLACE WITH LOCKDOWN BOLT, TO RIGHT ANGLE BRACKET

HIGH WALLED FLUMES

1. DRILL 1/2" (12.7 MM) HOLE USING SENSING ELEMENT SLOT AS A TEMPLATE.
2. INSTALL EXPANDING WALL ANCHOR SUPPLIED.
3. FASTEN SENSING ELEMENT IN PLACE USING LOCKDOWN BOLT. INTO WALL ANCHOR.

VERTICAL POSITIONING WITH LOCKDOWN BOLT INSTALLED

1. LOOSEN NUT ON POSITIONING BUSHING.
2. ADJUST SENSING ELEMENT UP OR DOWN TO POSITION THE TIP OF THE SENSOR AT THE ZERO FLOW LEVEL (MAXIMUM FLUID LEVEL WHICH CAN EXIST WITHOUT FLOW OCCURING) THE POSITIONING BUSHING WILLL MOVE UP OR DOWN IN ITS SLOT.
3. RETIGHTEN NUT ON POSITIONING BUSHING CHECK THAT TIP IS STILL AT ZERO FLOW LEVEL.

SENSING ELEMENT REMOVAL

1. REMOVE LOCKDOWN BOLT ONLY, AND SLIDE SENSING ELEMENT OUT OF MOUNTING TRACK. THIS WILL ALLOW EXACT REPLACEMENT OF THE SENSOR WITHOUT READJUSTING FOR ZERO FLOW.

® TRADE MARK OF THE F. B. LEOPOLD CO.

S.S. TAG:

FE-115

CALIBRATION LOCK ASSEMBLY

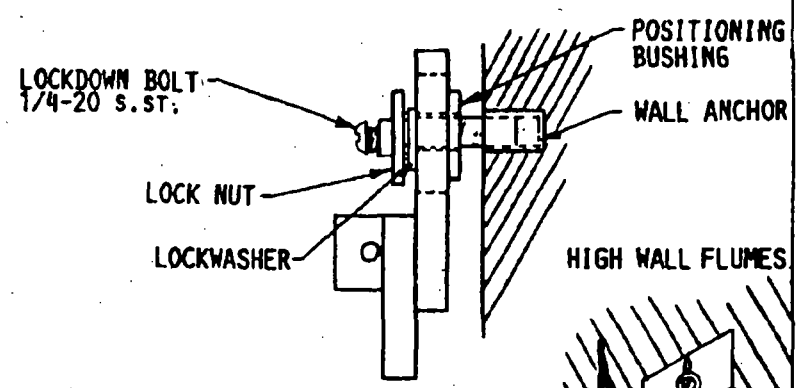

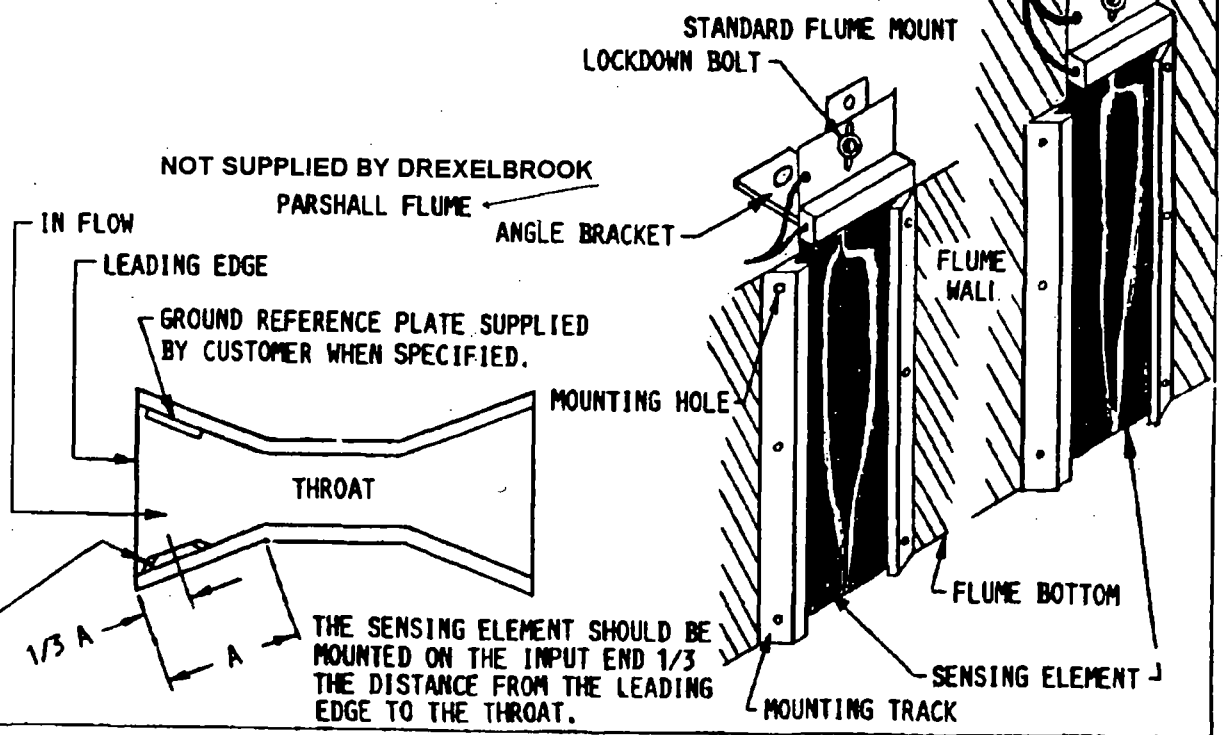

DREXELBROOK ENGINEERING CO. • HORSHAM, PA. 19044 •

COPYRIGHT 1986
DREXELBROOK ENG. CO.

CERTIFIED by PLH
PO# 66-01-2828
ENG:
USER: HERITAGE
ENVIRONMENTAL
DE# 392419

MOUNTING OF TRACK AND SENSING ELEMENT IN FLUME

FOR INFORMATION ONLY

SCALE NONE UNLESS OTHERWISE STATED ALL DIMENSIONS IN INCHES (MM)

TOLERANCES: UNLESS OTHERWISE STATED DECIMAL ±.005 (.13) FRACTION ±1/64 (.4) ANGLE ±2°

DR. R.W. MOYER 2-19-86
CHK. TE
APP'D

3-21-97-PLH-5 REV#1

ISSUE	EDO	DATE
2	5-90-286	6-90
1	2-81-283	4-86

DREXELBROOK
Engineering Company

• 205 Keith Valley Road • Horsham, PA 19044 • Telephone 1-800-334-2748
• (215)674-1234 (Factory) • FAX (215) 674-2731

3-21-97-PLH-6

Spare Parts List

	Price	Quantity Recommended
Electronic Units		
_____	____	_____
_____	____	_____
_____	____	_____
_____	____	_____
408-800 - Magi-Cal		
408-800-1 Chassis (Modif. 91-38)	____	_____
408-830-1 Chassis (Modif. 91-38)	____	_____
_____	____	_____
408-6200 UniversaLevel™		
408-6200-1 Chassis	____	_____
408-6202-1 Chassis (Time Delay)		
408-6200-11 Chassis	$1975.	ONE
408-6200-21 Chassis*	____	_____
408-6230-1 Chassis	____	_____
408-6232-1 Chassis (Time Delay)	____	_____
408-6250-1 Chassis	____	_____
408-6202-1 Chassis	____	_____
408-6232-1 Chassis	____	_____
408-6202-11 Chassis	____	_____
408-6232-11 Chassis	____	_____
_____	____	_____
*Uses Two Terminal Cable and Tuning Assembly # _____ For _____ Length Cable	____	_____
True Level Series		
408-7200-1 Chassis	____	_____
408-7400-1 Chassis	____	_____
_____	____	_____
DE-8000		
401-204-101 Memory Module	____	_____
401-21-6 Battery	____	_____
378-1-14 Fuse	____	_____
_____	____	_____
408-2200		
408-2200 Chassis	____	_____
408-200-1 Magi-Cal Chassis	____	_____
Smart Transmitters		
409-1100-1 Chassis	____	_____
409-1000-1 Chassis	____	_____
Ultrasonic Transmitter		
408-100-1 Chassis	____	_____

	Price	Quantity Recommended
Accessories		
Meters		
370-1104-401 5" Meter (4-20)	____	_____
370-1105-401 5" Meter (1-5)	____	_____
370-1106-401 5" Meter (10-50)	____	_____
370-1101-403 Vert. Scale (4-20)	____	_____
370-1104-401 Meter with Special Scale (Linear)	____	_____
370-1101-403 Meter with Special Scale (Linear)	____	_____
370-3000-1 Digital Meter Conversion Kit	____	_____
370-4000-1 370-4010-001 CHASSIS	$285.	ONE
Universal Level Accessories		
377-4-2 Barrier	____	_____
401-13-21 Chassis (24 VDC Supply)		
401-13-31 Chassis (45 VDC Supply)	$300.	ONE
401-16-1 RFI (Signal) (For WP Housing)	____	_____
401-16-2 RFI (Probe) (For WP Housing)	____	_____
401-16-4 RFI (Power)	____	_____
401-16-6 RFI (Signal) (For XP Housing)	____	_____
401-16-7 RFI (Probe) (For XP Housing)	____	_____
401-16-8 RFI (Signal) (Case Option)	____	_____
401-16-9 RFI (Probe) (Case Option)	____	_____
_____	____	_____
Setcon Chassis (Specify High or Low Level Fail Safe		
401-1000-1 SPDT (4-20 mA)	____	_____
401-1001-1 DPDT (4-20 mA)	____	_____
401-1003-1 Adj. Diff. SPDT (4-20 mA)	____	_____
401-2000-1 Proportional (4-20 mA)	____	_____
_____	____	_____

Notes: 1- Where service is critical, a spare chassis should be stocked. Electronic units are designed with high quality components & redundant circuitry to give high reliability. No specific component is expected to fail.

2- Extra instruction manuals @ $5. each. (One per electronic unit at no charge)

Minimum Order - $50
$100. When Export Documentation Required

P.O. # 66-10-2828

USER HERITAGE ENVIRONMENTAL

ENG _____

JOB # _____

D.E. # 392419

Prices subject to change without notice.
Copyright Drexelbrook Engineering Co. 1995.
Printed in USA.

DREXELBROOK
Engineering Company

• 205 Keith Valley Road • Horsham, PA 19044 • Telephone 1-800-334-2748
• (215)674-1234 (Factory) • FAX (215) 674-2731

3-21-97-PLH-7

Spare Parts List

	Price	Quantity Recommended
Sensing Elements		
_____	_____	_____
_____	_____	_____
_____	_____	_____
Hi Temperature Cables (Three Terminal)		
380-05-11 5 Ft.	_____	_____
380-10-11 10 Ft.	_____	_____
380-15-11 15 Ft.	_____	_____
380-20-11 20 Ft.	_____	_____
380-25-11 25 Ft.	_____	_____
380-35-11 35 Ft.	_____	_____
380-50-11 50 Ft.	_____	_____
380- -11 Ft.	_____	_____
Three Terminal Cable		
380-05-12 5 Ft. Gen. Purpose	_____	_____
380-10-12 10 Ft. Gen. Purpose	_____	_____
380-15-12 15 Ft. Gen. Purpose	_____	_____
380-20-12 20 Ft. Gen. Purpose	_____	_____
380-25-12 25 Ft. Gen. Purpose	_____	_____
380-35-12 35 Ft. Gen. Purpose	_____	_____
380-50-12 50 Ft. Gen. Purpose	_____	_____
380-75-12 75 Ft. Gen. Purpose		
380-100-12 100 Ft. Gen. Purpose	$113.	ONE
380-150-12 150 Ft. Gen. Purpose	_____	_____
380- -12 Ft. Gen. Purpose	_____	_____
Composite Cable (Three Terminal)		
(First 10 Feet High Temp)		
(For Shorter Lengths, Use High Temp Cable)		
380-20-18 20 Ft.	_____	_____
380-25-18 25 Ft.	_____	_____
380-35-18 35 Ft.	_____	_____
380-50-18 50 Ft.	_____	_____
380- -18 Ft.	_____	_____

	Price	Quantity Recommended
True Level Cables (Three Terminal)		
380-5-115 5 Ft.	_____	_____
380-10-115 10 Ft.	_____	_____
380-15-115 15 Ft.	_____	_____
380-20-115 20 Ft.	_____	_____
380-25-115 25 Ft.	_____	_____
380-35-115 35 Ft.	_____	_____
380-50-115 50 Ft.	_____	_____
True Level Cables (Five Terminal)		
380-5-135 5 Ft.	_____	_____
380-10-135 10 Ft.	_____	_____
380-15-135 15 Ft.	_____	_____
380-20-135 20 Ft.	_____	_____
380-25-135 25 Ft.	_____	_____
380-35-135 35 Ft.	_____	_____
380-50-135 50 Ft.	_____	_____

Notes: 1- Where service is critical, a spare chassis should be stocked. Electronic units are designed with high quality components and redundant circuitry to give high reliability. No specific component is expected to fail.

2- Extra instruction manuals @ $5. each. (one per electronic unit at no charge.)

Minimum Order - $100.

P.O. # 66-01-2828

USER HERITAGE ENVIRONMENTAL

ENG _____

JOB # _____

D.E. # 392419

Prices subject to change without notice.
Copyright Drexelbrook Engineering Co. 1995.
Printed in USA.

NOTES:
1. MATERIAL: FIBERGLASS
2. ENCLOSURE: NEMA 4X
3. COVER GASKET MATERIAL: SILICONE

S.S. TAG:
FQI-115A

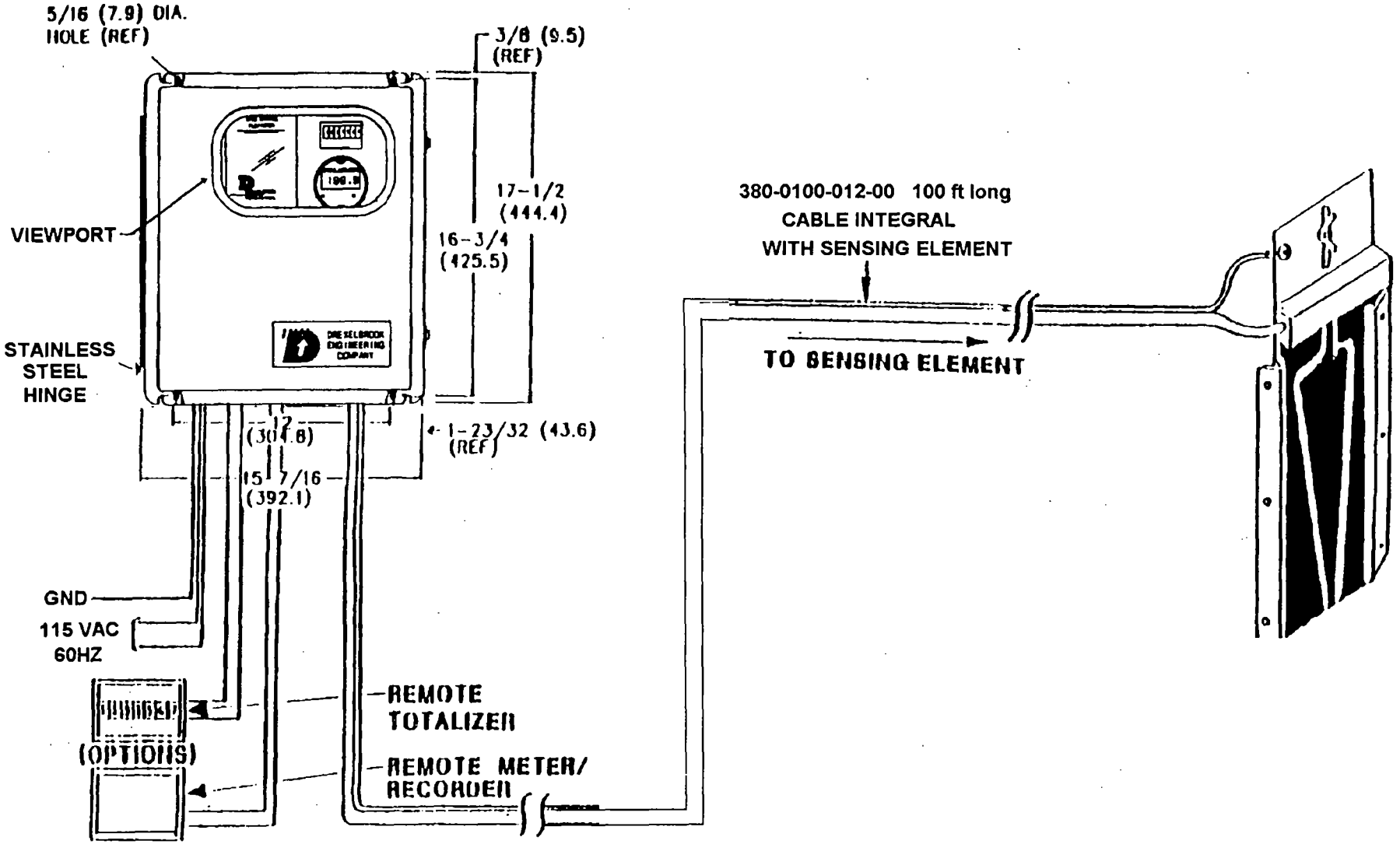

DREXELBROOK ENGINEERING CO. • HORSHAM, PA. 19044 •

COPYRIGHT 1980 DREXELBROOK ENG. CO.

CERTIFIED by PLH
PO# 66-01-2828
ENG:
USER:
HERITAGE ENVIRONMENTAL
DE# 392419

MOUNTING FOR
303-0341-017-30C0
FLUSH FLOW
MEASURING SYSTEM

SCALE NONE
3-21-97-PLH-1

DR. CJP 8/27/80
CHK. EAD
APP'D

2 ISSUE | 11-80-503 ENG | DATE

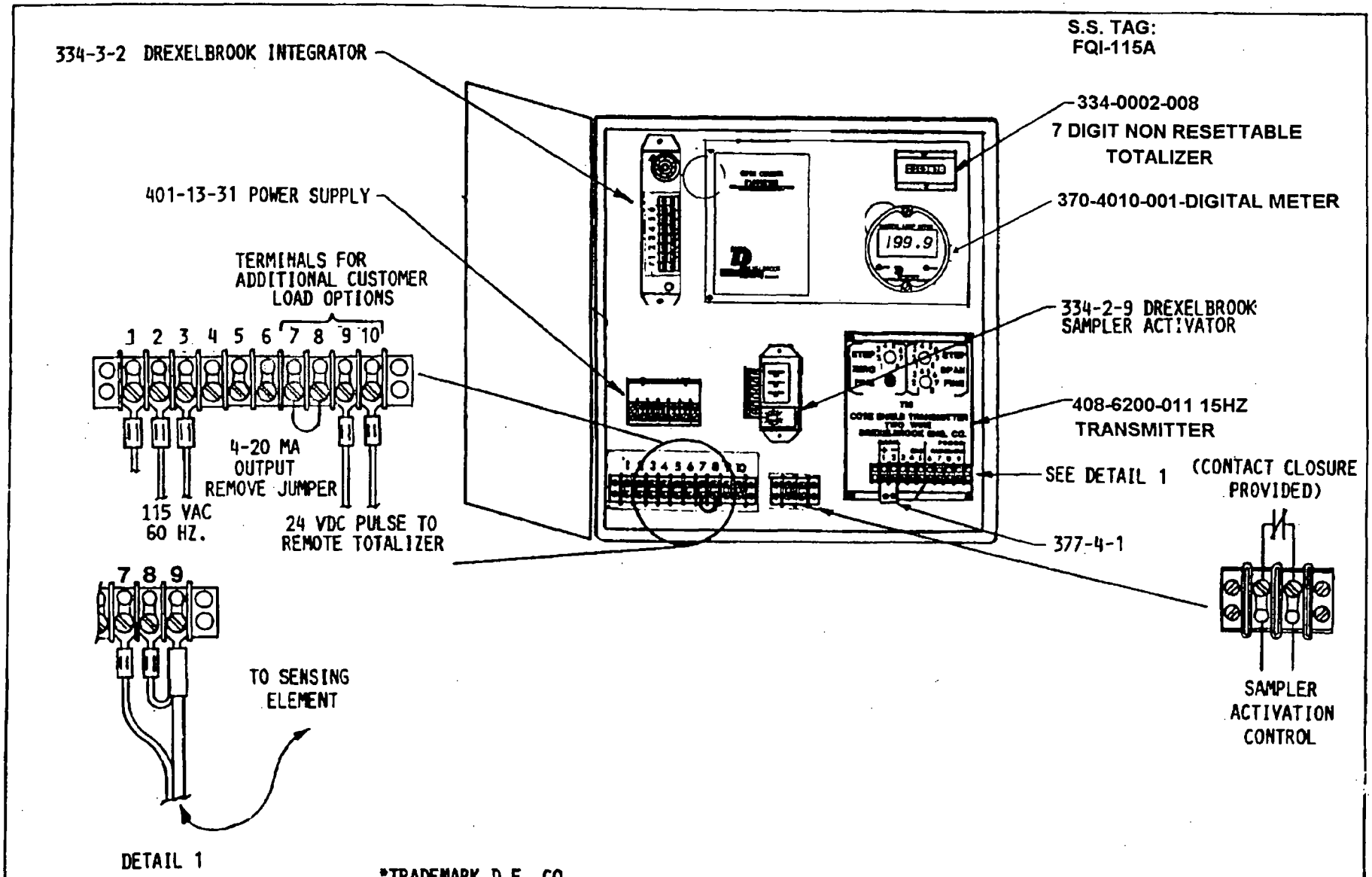

*TRADEMARK D.E. CO.

DREXELBROOK ENGINEERING CO. ● HORSHAM, PA. 19044 ● COPYRIGHT 1986 DREXELBROOK ENG. CO.

CERTIFIED by PLH

PO# 66-01-2828

ENG:

USER:

HERITAGE ENVIRONMENTAL

DE# 392419

303-0341-017-30C0

WIRING FOR FLUSH FLOW MEASURING SYSTEM

SCALE NONE UNLESS OTHERWISE STATED ALL DIMENSIONS IN INCHES (MM)

TOLERANCES: UNLESS OTHERWISE STATED DECIMAL ±.005 (.13) FRACTION ±1/64 (.4) ANGLE ±2°

DR. RWH 2-19-96

CHK. TJF 4-11-96

APP'D

3-21-97-PLH-2-REV#1

ISSUE	EDO	DATE
2	5-90-286	6-90
1	2-86-282	4-86

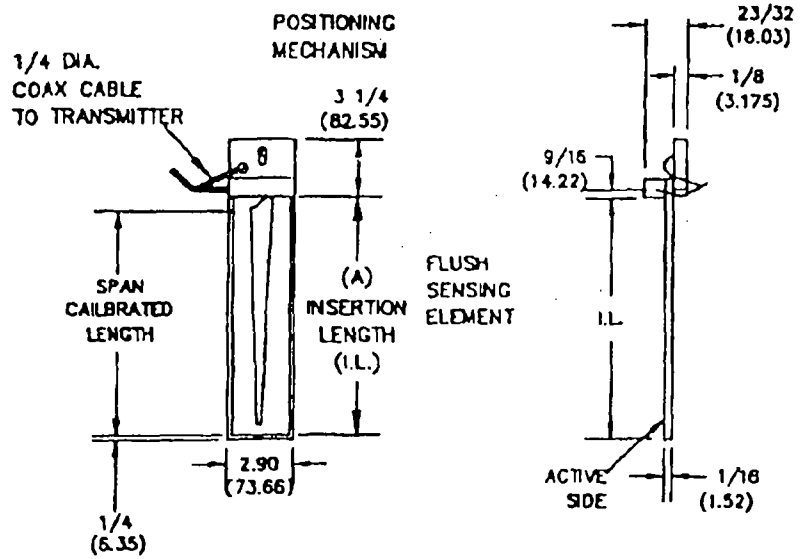

FLUME SIZE (IN)	SENSING ELEMENT (STD) MODEL NO.	(A) I.L. (IN)	SPAN RANGE (IN) MIN	SPAN RANGE (IN) MAX	FLOW RANGE (GPM) MIN	FLOW RANGE (GPM) MAX
PARSHALL FLUMES						
2	700-703-338	12	0-2	0-6	0-19	0-103

S.S. TAG:

FE-115

NOTES:
1. ALL INSERTION LENGTH (I.L.) DIMENSIONS ARE ±1/4 INCH.

CERTIFIED by PLH
PO# 66-01-2828
ENG:
USER: HERITAGE ENVIRONMENTAL
DE# 392419

ISS.	EDO/DSR NO.	APP'D	DATE
3	3-93-163	[illegible]	4-8-93
2	5-90-250	JRB	10-14-91
1	12-88-246	JRB	1-89

COPYRIGHT 1993
DREXELBROOK ENG CO.

SCALE NONE
DR. JL 4-7-93
CK. ASK

DREXELBROOK
Engineering Company
305 KEITH VALLEY RD
HORSHAM, PA 19044-9988
215-674-1234
FAX 215-674-2731

OPEN CHANNEL FLOW FLUSH SENSING ELEMENTS FOR PARSHALL FLUMES.

700-0703-338-D0

3-21-97-PLH-3-REV#1

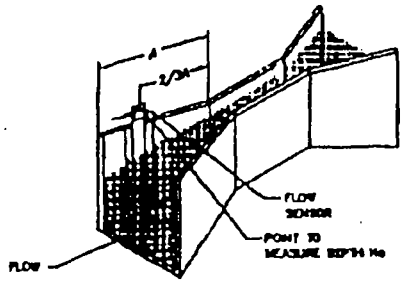

FIG. 1 – PARSHALL FLUME SENSING ELEMENT LOCATION

FLUME SIZE "W" (IN)	A (IN)	2A/3 (IN)
1	14 1/4	9 1/2
2	18 1/4	12 7/8
3	18 3/8	12 1/4
6	24 7/16	16 5/16
9	34 5/8	23 1/8
12	54	36
18	57	38

FLUME SIZE "W" (IN)	A (IN)	2A/3 (IN)
24	60	40
36	66	44
48	72	48
60	78	52
72	84	56
84	90	60
96	96	64

TABLE 1 – PARSHALL FLUME SENSING ELEMENT LOCATION

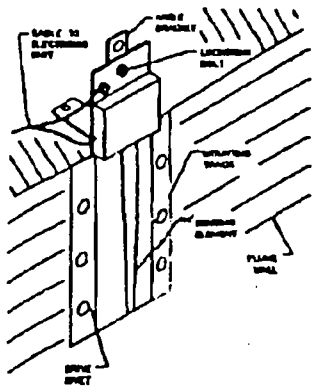

FIG. 3 – STANDARD MOUNTING

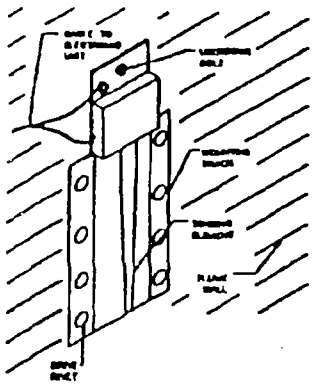

FIG. 4 – MOUNTING IN HIGH WALLED FLUME

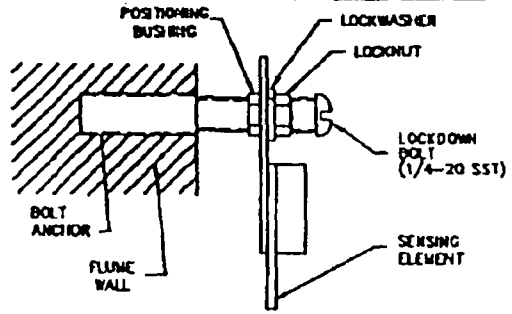

FIG. 5 – ANCHORING IN A HIGH WALLED FLUME

S.S. TAG:

FE-115

PROCEDURE

THE TRACK IS MOUNTED TO THE WALL OF THE PRIMARY MEASURING DEVICE USING THE DRIVE RIVETS SUPPLIED. FOR LOCATION OF THE SENSING ELEMENT, SEE FIG. 1 AND TABLE 1 FOR PARSHALL FLUMES AND FIG. 2 FOR RECTANGULAR WEIRS.

- MARK THE RIVET HOLES USING THE MOUNTING TRACK AS A TEMPLATE.
- DRILL HOLES 1/4 INCH IN DIA. APPROX. 1 INCH DEEP.
- ONCE MOUNTING TRACK IS IN PLACE, SLIDE SENSING ELEMENT INTO TRACK WITH SCALE SIDE FACING THE STREAM.
- MOUNT ANGLE BRACKET TO TOP EDGE OF FLUME OR WEIR AS SHOWN IN FIG. 3.
- WITH ANGLE BRACKET PROPERLY IN PLACE, FASTEN SENSING ELEMENT TO ANGLE BRACKET WITH LOCKDOWN BOLT.
- TO ENSURE PROPER VERTICAL POSITIONING OF THE SENSING ELEMENT, LOOSEN THE NUT ON THE POSITIONING BUSHING (SEE FIG. 5) AND ADJUST SENSING ELEMENT TO POSTION TIP OF THE SENSOR AT THE ZERO FLOW LEVEL. RE-TIGHTEN NUT AND CHECK THAT TIP IS STILL AT ZERO FLOW LEVEL.
- FOR HIGH-WALLED FLUMES, WHEN ANGLE BRACKET IS NOT USED, DRILL 1/2 INCH HOLE USING SENSING ELEMENT SLOT AS A TEMPLATE (SEE FIG. 4). INSTALL EXPANDING WALL ANCHOR TO WALL OF FLOW CHANNEL. SECURE THE SENSING ELEMENT IN PLACE BY FASTENING THE LOCKDOWN BOLT TO THE WALL ANCHOR.

CERTIFIED by PLH
PO# 66-01-2828
ENG:
USER: HERITAGE ENVIRONMENTAL
DE# 392419

ISS.	EDO/DSR NO.	APP'D	DATE
3	3-93-163	[illegible]	4-7-93
2	5-90-250	JRB	0-14-91
1	12-88-246	JRB	1-24-89

COPYRIGHT 1993
DREXELBROOK ENG CO.

SCALE NONE
UNLESS OTHERWISE STATED ALL DIMENSIONS IN INCHES (mm)
DR. JL 4-7-93
CK. ASK

DREXELBROOK
Engineering Company
7 KEITH VALLEY RD
HORSHAM, PA 19044-9988
215-674-1234
FAX 215-674-2731

OPEN CHANNEL FLOW
FLUSH SENSING ELEMENTS
FOR PARSHALL FLUMES

700-0703-338-D0

3-21-97-PLH-4

TYPICAL MOUNTING INSTRUCTIONS

TRACK MOUNTING FOR FLUMES WITHOUT MOLDED IN TRACK

1. LOCATE MOUNTING TRACK RIVET HOLES BY USING MOUNTING TRACK AS A TEMPLATE.
2. DRILL HOLES 1/4" DIA. (6.35 MM).
3. MOUNT THE MOUNTING TRACK WITH DRIVE RIVETS SUPPLIED.
4. SLIDE SENSING ELEMENT INTO MOUNTING TRACK.

SENSING ELEMENT MOUNTING WEIRS AND STANDARD FLUMES

1. MOUNT ANGLE BRACKET SUPPLIED USING EXTRA DRIVE RIVETS (SUPPLIED), OR AS DESIRED.
2. INSTALL SENSING ELEMENT AND LOCK IN PLACE WITH LOCKDOWN BOLT, TO RIGHT ANGLE BRACKET

HIGH WALLED FLUMES

1. DRILL 1/2" (12.7 MM) HOLE USING SENSING ELEMENT SLOT AS A TEMPLATE.
2. INSTALL EXPANDING WALL ANCHOR SUPPLIED.
3. FASTEN SENSING ELEMENT IN PLACE USING LOCKDOWN BOLT, INTO WALL ANCHOR.

VERTICAL POSITIONING WITH LOCKDOWN BOLT INSTALLED

1. LOOSEN NUT ON POSITIONING BUSHING.
2. ADJUST SENSING ELEMENT UP OR DOWN TO POSITION THE TIP OF THE SENSOR AT THE ZERO FLOW LEVEL.(MAXIMUM FLUID LEVEL WHICH CAN EXIST WITHOUT FLOW OCCURING) THE POSITIONING BUSHING WILLL MOVE UP OR DOWN IN ITS SLOT.
3. RETIGHTEN NUT ON POSITIONING BUSHING CHECK THAT TIP IS STILL AT ZERO FLOW LEVEL.

SENSING ELEMENT REMOVAL

1. REMOVE LOCKDOWN BOLT ONLY,AND SLIDE SENSING ELEMENT OUT OF MOUNTING TRACK. THIS WILL ALLOW EXACT REPLACEMENT OF THE SENSOR WITHOUT READJUSTING FOR ZERO FLOW.

® TRADE MARK OF THE F. B. LEOPOLD CO.

S.S. TAG:

FE-115

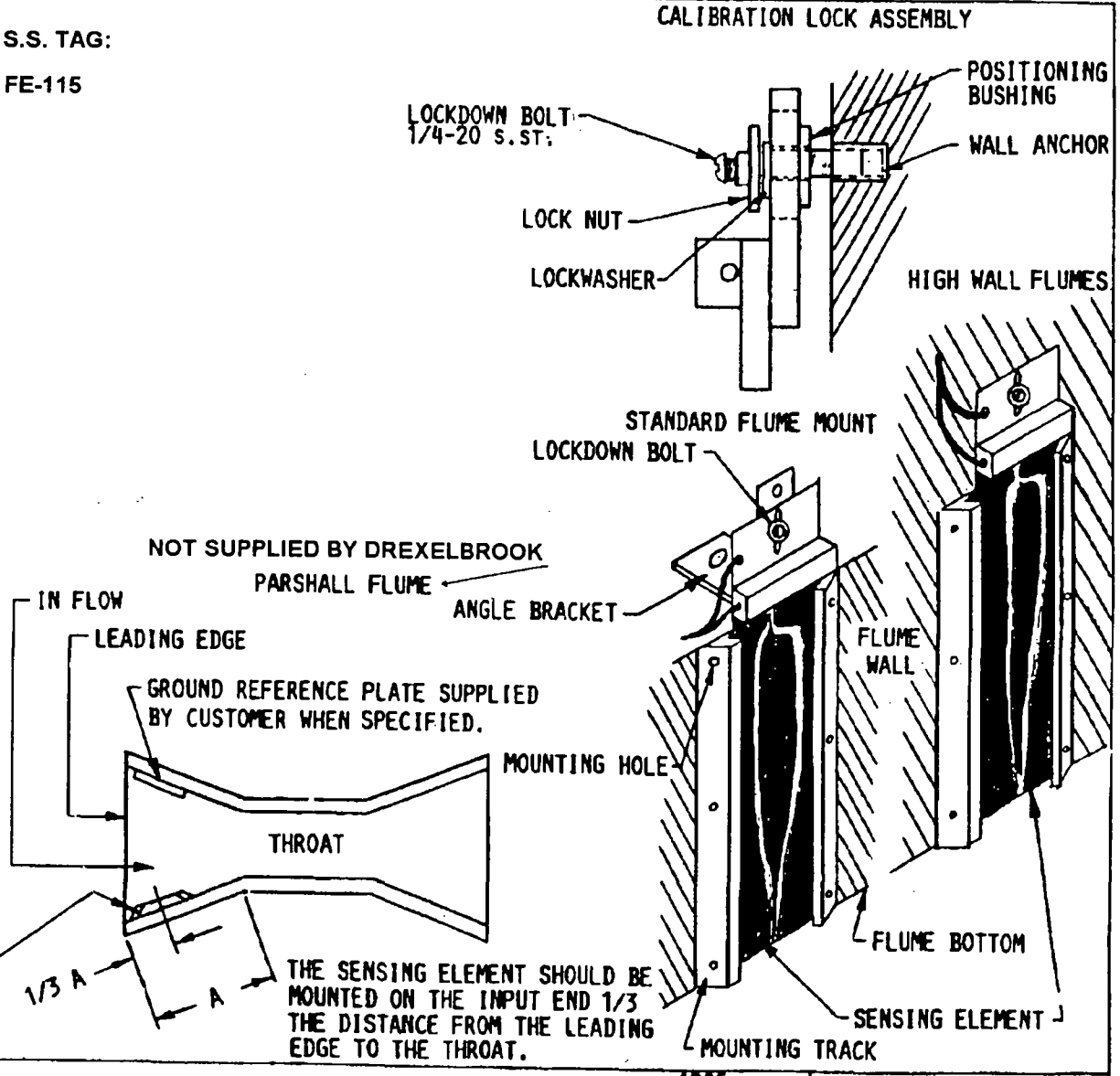

DREXELBROOK ENGINEERING CO. • HORSHAM, PA. 19044 •

COPYRIGHT 1986 DREXELBROOK ENG. CO.

CERTIFIED by PLH

PO# 66-01-2828

ENG:

USER: HERITAGE ENVIRONMENTAL

DE# 392419

MOUNTING OF TRACK AND SENSING ELEMENT IN FLUME

FOR INFORMATION ONLY

SCALE NONE UNLESS OTHERWISE STATED ALL DIMENSIONS IN INCHES (MM)

TOLERANCES: UNLESS OTHERWISE STATED DECIMAL ±.008 (.13) FRACTION ±1/64 (.4) ANGLE ±2°

DR. R.W.MOYER 2-19-86

CHK

APP'D

3-21-97-PLH-5 REV#1

ISSUE	EDO	DATE
2	5-90-286	6-90
1	2-81-283	4-86

DREXELBROOK
Engineering Company

• 205 Keith Valley Road • Horsham, PA 19044 • Telephone 1-800-334-2748
• (215)674-1234 (Factory) • FAX (215) 674-2731

3-21-97-PLH-6

Spare Parts List

	Price	Quantity Recommended
Electronic Units		
_____	____	_____
_____	____	_____
_____	____	_____
_____	____	_____
408-800 - Magi-Cal		
408-800-1 Chassis (Modif. 91-38)	____	_____
408-830-1 Chassis (Modif. 91-38)	____	_____
_____	____	_____
408-6200 UniversaLevel™		
408-6200-1 Chassis	____	_____
408-6202-1 Chassis (Time Delay)		
408-6200-11 Chassis	$1975.	ONE
408-6200-21 Chassis*	____	_____
408-6230-1 Chassis	____	_____
408-6232-1 Chassis (Time Delay)	____	_____
408-6250-1 Chassis	____	_____
408-8202-1 Chassis	____	_____
408-8232-1 Chassis	____	_____
408-8202-11 Chassis	____	_____
408-8232-11 Chassis	____	_____
_____	____	_____
*Uses Two Terminal Cable and Tuning Assembly #_____For_____ Length Cable	____	_____
True Level Series		
408-7200-1 Chassis	____	_____
408-7400-1 Chassis	____	_____
_____	____	_____
DE-8000		
401-204-101 Memory Module	____	_____
401-21-5 Battery	____	_____
378-1-14 Fuse	____	_____
_____	____	_____
408-2200		
408-2200 Chassis	____	_____
408-200-1 Magi-Cal Chassis	____	_____
Smart Transmitters		
409-1100-1 Chassis	____	_____
409-1000-1 Chassis	____	_____
Ultrasonic Transmitter		
408-100-1 Chassis	____	_____

	Price	Quantity Recommended
Accessories		
Meters		
370-1104-401 5" Meter (4-20)	____	_____
370-1105-401 5" Meter (1-5)	____	_____
370-1106-401 5" Meter (10-50)	____	_____
370-1101-403 Vert. Scale (4-20)	____	_____
370-1104-401 Meter with Special Scale (Linear)	____	_____
370-1101-403 Meter with Special Scale (Linear)	____	_____
370-3000-1 Digital Meter Conversion Kit	____	_____
370-4000-1 370-4010-001 CHASSIS	$285.	ONE
Universal Level Accessories		
377-4-2 Barrier	____	_____
401-13-21 Chassis (24 VDC Supply)		
401-13-31 Chassis (45 VDC Supply)	$300.	ONE
401-16-1 RFI (Signal) (For WP Housing)	____	_____
401-16-2 RFI (Probe) (For WP Housing)	____	_____
401-16-4 RFI (Power)	____	_____
401-16-6 RFI (Signal) (For XP Housing)	____	_____
401-16-7 RFI (Probe) (For XP Housing)	____	_____
401-16-8 RFI (Signal) (Case Option)	____	_____
401-16-9 RFI (Probe) (Case Option)	____	_____
_____	____	_____
Setcon Chassis (Specify High or Low Level Fail Safe		
401-1000-1 SPDT (4-20 mA)	____	_____
401-1001-1 DPDT (4-20 mA)	____	_____
401-1003-1 Adj. Diff. SPDT (4-20 mA)	____	_____
401-2000-1 Proportional (4-20 mA)	____	_____
_____	____	_____

Notes: 1- Where service is critical, a spare chassis should be stocked. Electronic units are designed with high quality components & redundant circuitry to give high reliability. No specific component is expected to fail.

2- Extra instruction manuals @ $5. each. (One per electronic unit at no charge)

Minimum Order - $50.
$100. When Export Documentation Required.

P.O. # 66-10-2828

USER HERITAGE ENVIRONMENTAL

ENG _____

JOB # _____

D.E. # 392419

Prices subject to change without notice.
Copyright Drexelbrook Engineering Co. 1995.
Printed in USA.

DREXELBROOK
Engineering Company

• 205 Keith Valley Road • Horsham, PA 19044 • Telephone 1-800-334-2748
• (215)674-1234 (Factory) • FAX (215) 674-2731

3-21-97-PLH-7

Spare Parts List

	Price	Quantity Recommended
Sensing Elements		
_____	____	_____
_____	____	_____
_____	____	_____
Hi Temperature Cables (Three Terminal)		
380-05-11 5 Ft.	____	_____
380-10-11 10 Ft.	____	_____
380-15-11 15 Ft.	____	_____
380-20-11 20 Ft.	____	_____
380-25-11 25 Ft.	____	_____
380-35-11 35 Ft.	____	_____
380-50-11 50 Ft.	____	_____
380- -11 Ft.	____	_____
Three Terminal Cable		
380-05-12 5 Ft. Gen. Purpose	____	_____
380-10-12 10 Ft. Gen. Purpose	____	_____
380-15-12 15 Ft. Gen. Purpose	____	_____
380-20-12 20 Ft. Gen. Purpose	____	_____
380-25-12 25 Ft. Gen. Purpose	____	_____
380-35-12 35 Ft. Gen. Purpose	____	_____
380-50-12 50 Ft. Gen. Purpose	____	_____
380-75-12 75 Ft. Gen. Purpose		
380-100-12 100 Ft. Gen. Purpose	$113.	ONE
380-150-12 150 Ft. Gen. Purpose	____	_____
380- -12 Ft. Gen. Purpose	____	_____
Composite Cable (Three Terminal)		
(First 10 Feet High Temp)		
(For Shorter Lengths, Use High Temp Cable)		
380-20-18 20 Ft.	____	_____
380-25-18 25 Ft.	____	_____
380-35-18 35 Ft.	____	_____
380-50-18 50 Ft.	____	_____
380- -18 Ft.	____	_____

	Price	Quantity Recommended
True Level Cables (Three Terminal)		
380-5-115 5 Ft.	____	_____
380-10-115 10 Ft.	____	_____
380-15-115 15 Ft.	____	_____
380-20-115 20 Ft.	____	_____
380-25-115 25 Ft.	____	_____
380-35-115 35 Ft.	____	_____
380-50-115 50 Ft.	____	_____
True Level Cables (Five Terminal)		
380-5-135 5 Ft.	____	_____
380-10-135 10 Ft.	____	_____
380-15-135 15 Ft.	____	_____
380-20-135 20 Ft.	____	_____
380-25-135 25 Ft.	____	_____
380-35-135 35 Ft.	____	_____
380-50-135 50 Ft.	____	_____

Notes: 1- Where service is critical, a spare chassis should be stocked. Electronic units are designed with high quality components and redundant circuitry to give high reliability. No specific component is expected to fail.

2- Extra instruction manuals @ $5. each. (one per electronic unit at no charge.)

Minimum Order - $100.

P.O. # 66-01-2828

USER HERITAGE ENVIRONMENTAL

ENG _____

JOB # _____

D.E. # 392419

Prices subject to change without notice.
Copyright Drexelbrook Engineering Co. 1995.
Printed in USA.

NOTES:
1. MATERIAL: FIBERGLASS
2. ENCLOSURE: NEMA 4X
3. COVER GASKET MATERIAL: SILICONE

S.S. TAG:
FQI-115A

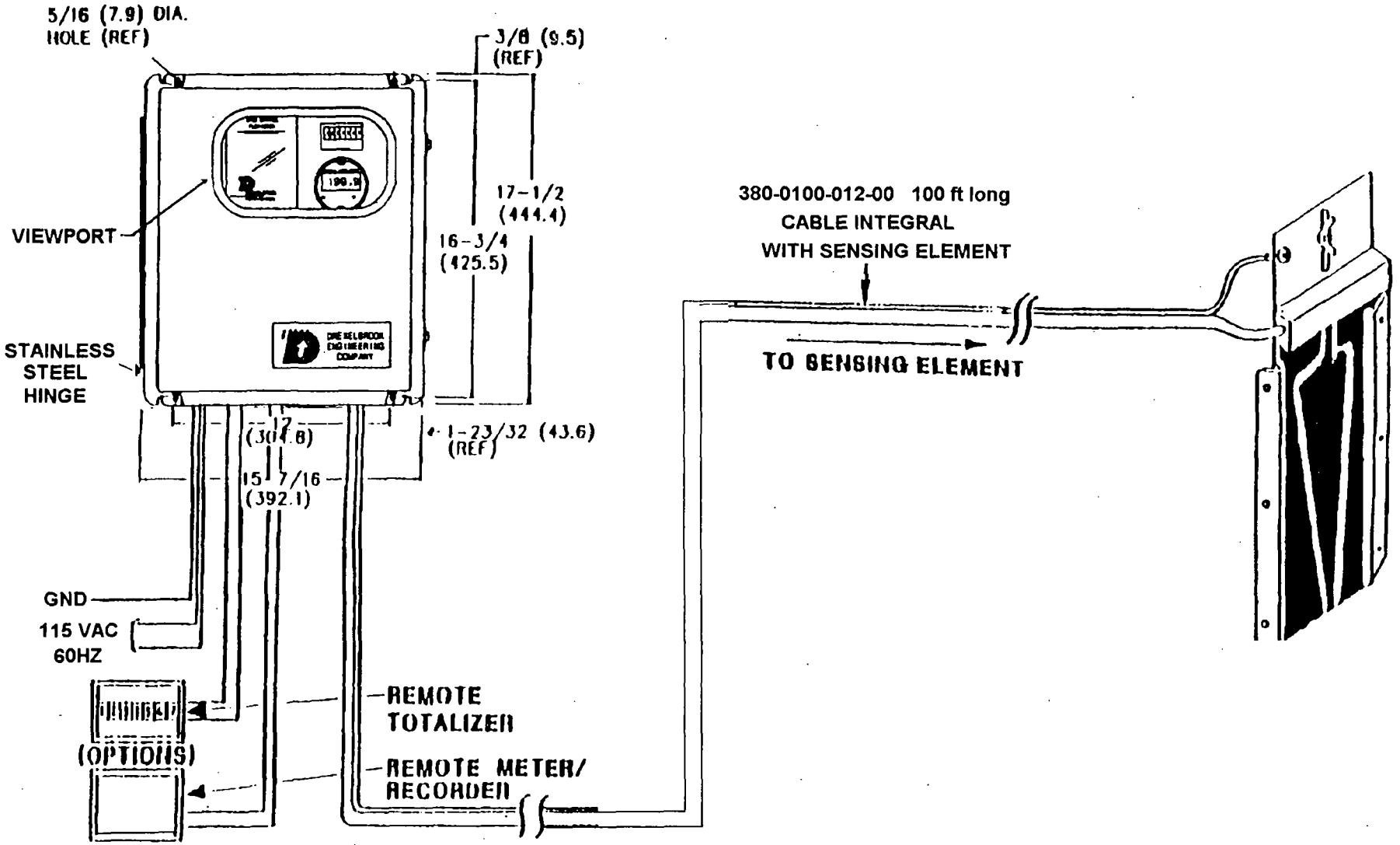

DREXELBROOK ENGINEERING CO. • HORSHAM, PA. 19044 •

COPYRIGHT 1980 DREXELBROOK ENG. CO.

MOUNTING FOR 303-0341-017-30C0 FLUSH FLOW MEASURING SYSTEM

SCALE NONE

3-21-97-PLH-1

DR. CJP 8/27/80

CHK. ELD

APP'D SAS

2 ISSUE | 11-80-503 ENG | 1/8/80 DATE

CERTIFIED by PLH

PO# 66-01-2828

ENG:

USER:

HERITAGE ENVIRONMENTAL

DE# 392419

S.S. TAG:
FQI-115A

334-3-2 DREXELBROOK INTEGRATOR

334-0002-008
7 DIGIT NON RESETTABLE
TOTALIZER

401-13-31 POWER SUPPLY

370-4010-001-DIGITAL METER

TERMINALS FOR
ADDITIONAL CUSTOMER
LOAD OPTIONS

1 2 3 4 5 6 7 8 9 10

334-2-9 DREXELBROOK
SAMPLER ACTIVATOR

408-6200-011 15HZ
TRANSMITTER

4-20 MA
OUTPUT
REMOVE JUMPER

115 VAC
60 HZ.

24 VDC PULSE TO
REMOTE TOTALIZER

SEE DETAIL 1

(CONTACT CLOSURE
PROVIDED)

377-4-1

7 8 9

TO SENSING
ELEMENT

SAMPLER
ACTIVATION
CONTROL

DETAIL 1

*TRADEMARK D.E. CO.

DREXELBROOK ENGINEERING CO. • HORSHAM, PA. 19044 •

COPYRIGHT 1986
DREXELBROOK ENG. CO.

CERTIFIED by PLH
PO# 66-01-2828
ENG:
USER:
HERITAGE ENVIRONMENTAL
DE# 392419

303-0341-017-30C0
WIRING FOR FLUSH FLOW
MEASURING SYSTEM

SCALE NONE
UNLESS OTHERWISE STATED ALL DIMENSIONS IN INCHES (MM)
TOLERANCES: UNLESS OTHERWISE STATED
DECIMAL ±.005 (.13)
FRACTION ±1/64 (.4)
ANGLE ±2°
DR. RWH 2-19-86
CHK. T.E.
APP'D

3-21-97-PLH-2-REV#1

ISSUE	EDO	DATE
2	5-90-286	6-90
1	2-86-282	4-86

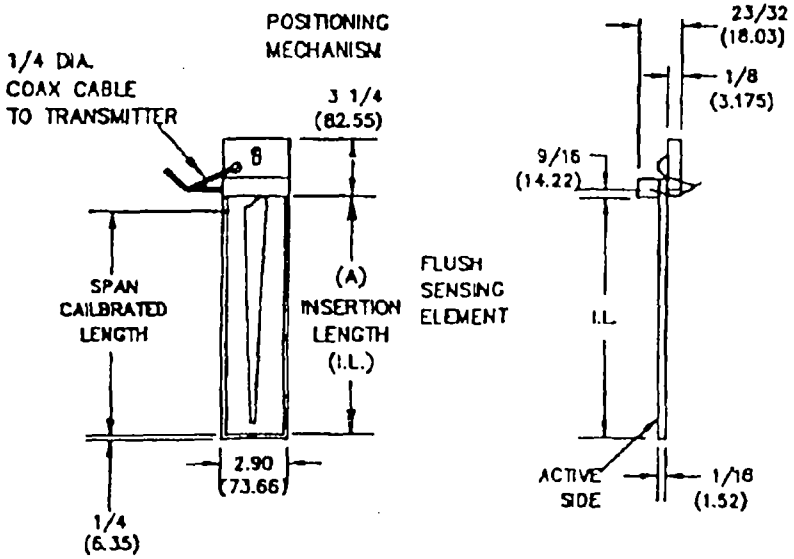

FLUME SIZE (IN)	SENSING ELEMENT (STD) MODEL NO.	(A) I.L. (IN)	SPAN RANGE (IN) MIN	SPAN RANGE (IN) MAX	FLOW RANGE (GPM) MIN	FLOW RANGE (GPM) MAX
PARSHALL FLUMES						
2	700-703-338	12	0-2	0-6	0-19	0-103

S.S. TAG:

FE-115

NOTES:
1. ALL INSERTION LENGTH (I.L.) DIMENSIONS ARE ±1/4 INCH.

CERTIFIED by PLH
PO# 66-01-2828
ENG:
USER: HERITAGE ENVIRONMENTAL
DE# 392419

ISS.	EDO/DSR NO.	APP'D	DATE
3	3-93-163	[illegible]	4-8-93
2	5-90-250	JRB	10-14-91
1	12-88-246	JRB	1-89

COPYRIGHT 1993
DREXELBROOK ENG CO.
SCALE NONE
DR. JL 4-7-93
CK. ASK

DREXELBROOK
Engineering Company
309 KEITH VALLEY RD
HORSHAM, PA 19044-9988
215-674-1234
FAX 215-674-2731

OPEN CHANNEL FLOW FLUSH SENSING ELEMENTS FOR PARSHALL FLUMES.

700-0703-338-D0

3-21-97-PLH-3-REV#1

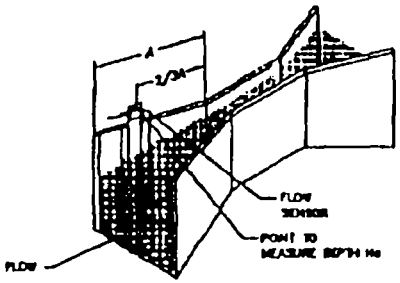

FIG. 1 – PARSHALL FLUME SENSING ELEMENT LOCATION

FLUME SIZE W (IN)	A (IN)	2A/3 (IN)	FLUME SIZE W (IN)	A (IN)	2A/3 (IN)
1	14 1/4	9 1/2	24	60	40
2	18 1/4	10 7/8	36	66	44
3	16 3/8	12 1/4	48	72	48
6	24 7/16	16 3/16	60	78	52
9	34 5/8	23 1/8	72	84	56
12	54	36	84	90	60
18	57	38	96	96	64

TABLE 1 – PARSHALL FLUME SENSING ELEMENT LOCATION

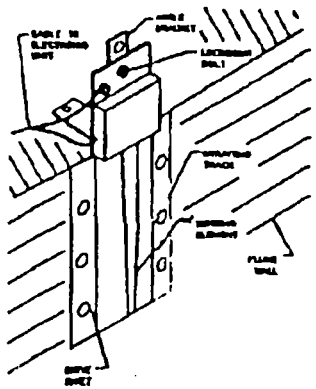

FIG. 3 – STANDARD MOUNTING

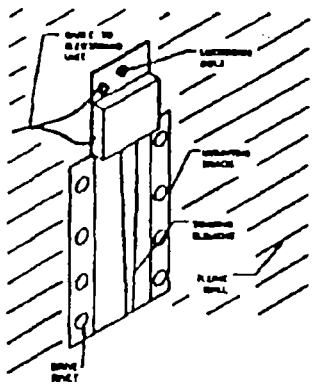

FIG. 4 – MOUNTING IN HIGH WALLED FLUME

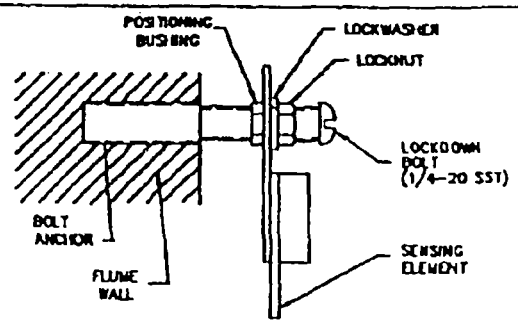

FIG. 5 – ANCHORING IN A HIGH WALLED FLUME

S.S. TAG:

FE-115

PROCEDURE

THE TRACK IS MOUNTED TO THE WALL OF THE PRIMARY MEASURING DEVICE USING THE DRIVE RIVETS SUPPLIED. FOR LOCATION OF THE SENSING ELEMENT, SEE FIG. 1 AND TABLE 1 FOR PARSHALL FLUMES AND FIG. 2 FOR RECTANGULAR WEIRS.

- MARK THE RIVET HOLES USING THE MOUNTING TRACK AS A TEMPLATE.
- DRILL HOLES 1/4 INCH IN DIA. APPROX. 1 INCH DEEP.
- ONCE MOUNTING TRACK IS IN PLACE, SLIDE SENSING ELEMENT INTO TRACK WITH SCALE SIDE FACING THE STREAM.
- MOUNT ANGLE BRACKET TO TOP EDGE OF FLUME OR WEIR AS SHOWN IN FIG. 3.
- WITH ANGLE BRACKET PROPERLY IN PLACE, FASTEN SENSING ELEMENT TO ANGLE BRACKET WITH LOCKDOWN BOLT.
- TO ENSURE PROPER VERTICAL POSITIONING OF THE SENSING ELEMENT, LOOSEN THE NUT ON THE POSITIONING BUSHING (SEE FIG. 5) AND ADJUST SENSING ELEMENT TO POSTION TIP OF THE SENSOR AT THE ZERO FLOW LEVEL. RE-TIGHTEN NUT AND CHECK THAT TIP IS STILL AT ZERO FLOW LEVEL.
- FOR HIGH-WALLED FLUMES, WHEN ANGLE BRACKET IS NOT USED, DRILL 1/2 INCH HOLE USING SENSING ELEMENT SLOT AS A TEMPLATE (SEE FIG. 4). INSTALL EXPANDING WALL ANCHOR TO WALL OF FLOW CHANNEL. SECURE THE SENSING ELEMENT IN PLACE BY FASTENING THE LOCKDOWN BOLT TO THE WALL ANCHOR.

CERTIFIED by PLH
PO# 66-01-2828
ENG:
USER: HERITAGE ENVIRONMENTAL
DE# 392419

ISS.	EDO/DSR NO.	APP'D	DATE
3	3-93-163	[illegible]	4-7-93
2	5-90-250	JRB	10-14-91
1	12-88-246	JRB	1-24-89

COPYRIGHT 1993
DREXELBROOK ENG CO.

SCALE NONE
UNLESS OTHERWISE STATED ALL DIMENSIONS IN INCHES (mm)
DR. JL 4-7-93
CK. ASK

DREXELBROOK
Engineering Company
5 KEITH VALLEY RD
HORSHAM, PA 19044-9988
215-674-1234
FAX 215-674-2731

OPEN CHANNEL FLOW
FLUSH SENSING ELEMENTS
FOR PARSHALL FLUMES

700-0703-338-D0

3-21-97-PLH-4

TYPICAL MOUNTING INSTRUCTIONS

TRACK MOUNTING FOR FLUMES WITHOUT MOLDED IN TRACK

1. LOCATE MOUNTING TRACK RIVET HOLES BY USING MOUNTING TRACK AS A TEMPLATE.
2. DRILL HOLES 1/4" DIA. (6.35 MM).
3. MOUNT THE MOUNTING TRACK WITH DRIVE RIVETS SUPPLIED.
4. SLIDE SENSING ELEMENT INTO MOUNTING TRACK.

SENSING ELEMENT MOUNTING WEIRS AND STANDARD FLUMES

1. MOUNT ANGLE BRACKET SUPPLIED USING EXTRA DRIVE RIVETS (SUPPLIED), OR AS DESIRED.
2. INSTALL SENSING ELEMENT AND LOCK IN PLACE WITH LOCKDOWN BOLT, TO RIGHT ANGLE BRACKET

HIGH WALLED FLUMES

1. DRILL 1/2" (12.7 MM) HOLE USING SENSING ELEMENT SLOT AS A TEMPLATE.
2. INSTALL EXPANDING WALL ANCHOR SUPPLIED.
3. FASTEN SENSING ELEMENT IN PLACE USING LOCKDOWN BOLT. INTO WALL ANCHOR.

VERTICAL POSITIONING WITH LOCKDOWN BOLT INSTALLED

1. LOOSEN NUT ON POSITIONING BUSHING.
2. ADJUST SENSING ELEMENT UP OR DOWN TO POSITION THE TIP OF THE SENSOR AT THE ZERO FLOW LEVEL (MAXIMUM FLUID LEVEL WHICH CAN EXIST WITHOUT FLOW OCCURING) THE POSITIONING BUSHING WILLL MOVE UP OR DOWN IN ITS SLOT.
3. RETIGHTEN NUT ON POSITIONING BUSHING CHECK THAT TIP IS STILL AT ZERO FLOW LEVEL.

SENSING ELEMENT REMOVAL

1. REMOVE LOCKDOWN BOLT ONLY, AND SLIDE SENSING ELEMENT OUT OF MOUNTING TRACK. THIS WILL ALLOW EXACT REPLACEMENT OF THE SENSOR WITHOUT READJUSTING FOR ZERO FLOW.

S.S. TAG:

FE-115

CALIBRATION LOCK ASSEMBLY

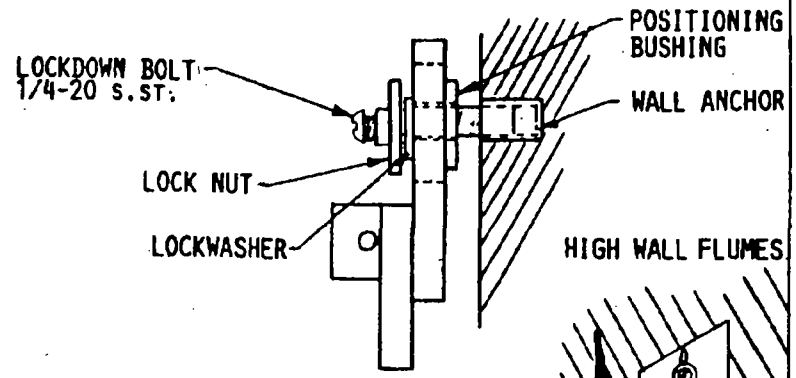

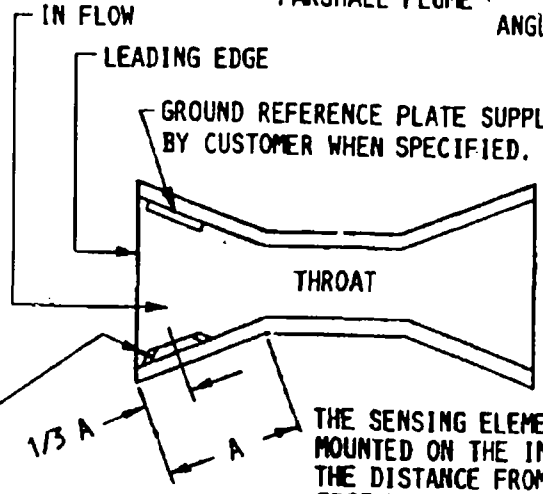

THE SENSING ELEMENT SHOULD BE MOUNTED ON THE INPUT END 1/3 THE DISTANCE FROM THE LEADING EDGE TO THE THROAT.

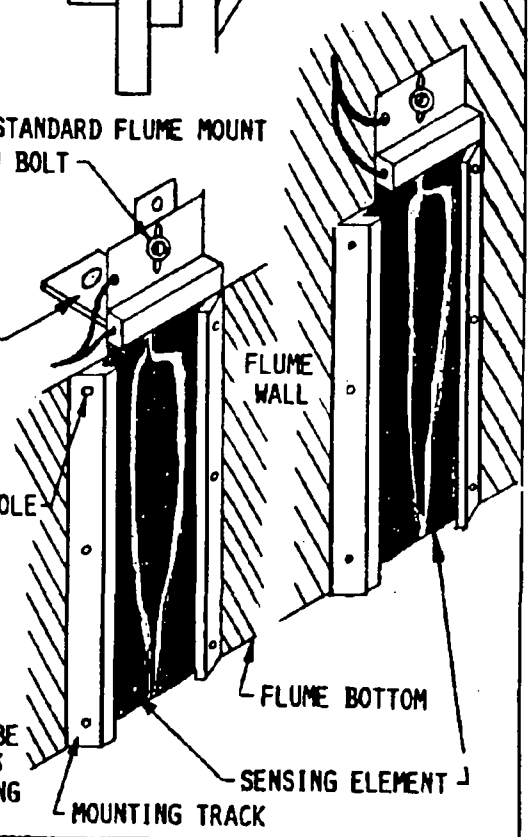

® TRADE MARK OF THE F. B. LEOPOLD CO.

DREXELBROOK ENGINEERING CO. ● HORSHAM, PA. 19044 ●

COPYRIGHT 1986 DREXELBROOK ENG. CO.

CERTIFIED by PLH

PO# 66-01-2828

ENG:

USER: HERITAGE

ENVIRONMENTAL

DE# 392419

MOUNTING OF TRACK AND SENSING ELEMENT IN FLUME

FOR INFORMATION ONLY

SCALE NONE UNLESS OTHERWISE STATED ALL DIMENSIONS IN INCHES (MM)

TOLERANCES: UNLESS OTHERWISE STATED DECIMAL ±.005 (.13) FRACTION ±1/64 (.4) ANGLE ±2°

DR. R. W. MOYER 2-19-86

CHK. T.E

APP'D

3-21-97-PLH-5 REV#1

ISSUE	EDO	DATE
2	5-90-286	6-90
1	2-81-283	4-86

DREXELBROOK
Engineering Company

• 205 Keith Valley Road • Horsham, PA 19044 • Telephone 1-800-334-2748
• (215)674-1234 (Factory) • FAX (215) 674-2731

3-21-97-PLH-6

Spare Parts List

	Price	Quantity Recommended
Electronic Units		
408-800 - Magi-Cal		
408-800-1 Chassis (Modif. 91-38)		
408-830-1 Chassis (Modif. 91-38)		
408-8200 UniversaLevel™		
408-8200-1 Chassis		
408-8202-1 Chassis (Time Delay)		
408-8200-11 Chassis	$1975.	ONE
408-8200-21 Chassis*		
408-8230-1 Chassis		
408-8232-1 Chassis (Time Delay)		
408-8250-1 Chassis		
408-8202-1 Chassis		
408-8232-1 Chassis		
408-8202-11 Chassis		
408-8232-11 Chassis		
*Uses Two Terminal Cable and Tuning Assembly #_____For_____ Length Cable		
True Level Series		
408-7200-1 Chassis		
408-7400-1 Chassis		
DE-8000		
401-204-101 Memory Module		
401-21-5 Battery		
376-1-14 Fuse		
408-2200		
408-2200 Chassis		
408-200-1 Magi-Cal Chassis		
Smart Transmitters		
409-1100-1 Chassis		
409-1000-1 Chassis		
Ultrasonic Transmitter		
405-100-1 Chassis		

	Price	Quantity Recommended
Accessories		
Meters		
370-1104-401 5" Meter (4-20)		
370-1105-401 5" Meter (1-5)		
370-1106-401 5" Meter (10-50)		
370-1101-403 Vert. Scale (4-20)		
370-1104-401 Meter with Special Scale (Linear)		
370-1101-403 Meter with Special Scale (Linear)		
370-3000-1 Digital Meter Conversion Kit		
370-4000-1 370-4010-001 CHASSIS	$285.	ONE
Universal Level Accessories		
377-4-2 Barrier		
401-13-21 Chassis (24 VDC Supply)		
401-13-31 Chassis (45 VDC Supply)	$300.	ONE
401-16-1 RFI (Signal) (For WP Housing)		
401-16-2 RFI (Probe) (For WP Housing)		
401-16-4 RFI (Power)		
401-16-6 RFI (Signal) (For XP Housing)		
401-16-7 RFI (Probe) (For XP Housing)		
401-16-8 RFI (Signal) (Case Option)		
401-16-9 RFI (Probe) (Case Option)		
Setcon Chassis (Specify High or Low Level Fail Safe		
401-1000-1 SPDT (4-20 mA)		
401-1001-1 DPDT (4-20 mA)		
401-1003-1 Adj. Diff. SPDT (4-20 mA)		
401-2000-1 Proportional (4-20 mA)		

Notes: 1- Where service is critical, a spare chassis should be stocked. Electronic units are designed with high quality components & redundant circuitry to give high reliability. No specific component is expected to fail.

2- Extra instruction manuals @ $5. each. (One per electronic unit at no charge)

Minimum Order - $50.
$100. When Export Documentation Required

P.O. # 66-10-2828

USER HERITAGE ENVIRONMENTAL

ENG._____

JOB #_____

D.E. # 392419

Prices subject to change without notice.
Copyright Drexelbrook Engineering Co. 1995.
Printed in USA.

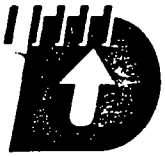

DREXELBROOK
Engineering Company

RF Level and Flow Controls

Installation and Operating Instructions

for

Drexelbrook 303-300 Series Open Channel Flowmeters with 408-6200 Series Electronics and 700-700 Series Flush Sensing Elements

For factory service, call toll free
1-800-527-6297

205 Keith Valley Road • Horsham, PA 19044 • 215-674-1234

303-300-LM
EDO #1-93-248

Installation and Operating Instructions for Drexelbrook 303-300 Series Open Channel Flowmeters with 408-6200 Series Electronics and 700-700 Series Flush Sensing Elements

For factory service, call toll-free
1-800-527-6297

Copyright 1993, Drexelbrook Engr. Co.
Printed in USA
Issue 8/87

Table of Contents

1.0 Introduction
- 1.1 Basics of Open Channel Flow
- 1.2 System Description
- 1.3 Models Available
  - 1.3.1 Open Channel Flowmeter Systems
  - 1.3.2 Sensing Elements

2.0 Specifications

3.0 Theory of Operation

4.0 Installation
- 4.1 Unpacking
- 4.2 Mounting the Electronic Unit
- 4.3 Mounting the Sensing Element
  - 4.3.1 The Mounting Track
  - 4.3.2 The Grounding Plate
  - 4.3.3 Mounting in a Parshall Flume
  - 4.3.4 Mounting in Palmer Bowlus and Leopold Lagco® Flume
  - 4.3.5 Mounting in Weirs
- 4.4 Wiring the Electronic Unit
- 4.5 Wiring the Sensing Element
  - 4.5.1 Integral Cable
  - 4.5.2 Long Cable Kit

5.0 Operation/Calibration
- 5.1 Start/up
- 5.2 Calibration Controls and Adjustments
  - 5.2.1 Zero and Span Controls
  - 5.2.2 Time Delay Control
  - 5.2.3 Fail-Safe Selector
- 5.3 Transmitter Calibration Procedures
  - 5.3.1 Calibration in Stream (Insitu)
  - 5.3.2 Calibration in a Bucket
- 5.4 Integrator - Totalizer Calibration
- 5.5 Sampler - Activator Calibration
- 5.6 Strip Chart Recorder Operation

6.0 Trouble Shooting
- 6.1 Introduction
- 6.2 Testing the 408-6200 Series Electronics
  - 6.2.1 Operational Check
  - 6.2.2 Drift Check
- 6.3 Checking the Two-Wire System Loop
- 6.4 Checking the Power Supply
- 6.5 Checking the Flush Sensing Element
  - 6.5.1 Operational Check
  - 6.5.2 Checking for Defective Insulation
- 6.6 Checking the Extension Cable
- 6.7 Checking the Integrator-Totalizer
- 6.8 Checking the Sampler-Activator
- 6.9 Checking the Optional Strip Chart Recorder

Table of Contents

7.0 Factory and Field Service Assistance
- 7.1 Telephone Assistance
- 7.2 Equipment Return
- 7.3 Field Service
- 7.4 Customer Training

8.0 Flow Tables
- 8.1 Table 1: 1"-24" Parshall Flumes
- 8.2 Table 2: 3'-12' Parshall Flumes
- 8.3 Table 3: 4"-21" Palmer Bowlus Flumes
- 8.4 Table 4: 24"-72" Palmer Bowlus Flumes
- 8.5 Table 5: 6"-24" Leopold Lagco Flumes
- 8.6 Table 6: 30"-72" Leopold Lagco Flumes
- 8.7 Table 7: 1'-5' Rectangular Weirs
- 8.8 Table 8: 6'-10' Rectangular Weirs
- 8.9 Table 9: 22 1/2° - 120° V-Notch Weirs
- 8.10 Table 10: 1'-5' Cipolletti Weirs
- 8.11 Table 11: 6'-10' Cipolletti Weirs

9.0 Appendix
290-1000-XXX-CD, sheets 1-4

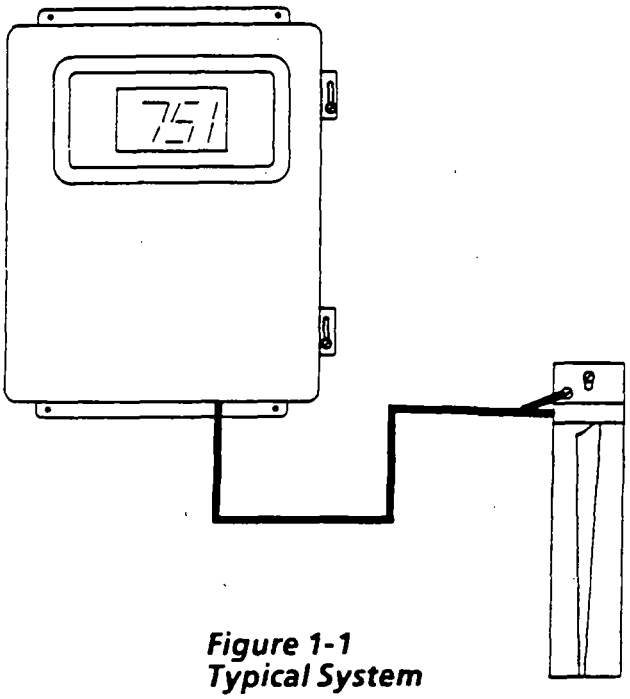

Figure 1-1
Typical System

1.0 Introduction

The instructions in this manual are for the Drexelbrook 303-300 Series open channel flowmeters.

1.1 Basics of Open Channel Flow

Open channel flow is flow in any type of channel where the liquid flows with a free surface. Rivers, canals, culverts, sewers, and partially filled pipes are examples of open channel flow.

The most common method of open channel flow measurement is to direct the stream through a primary measuring device. The primary measuring device conditions the stream to create a variable liquid head height that has a known and definite relationship to flow. The height or level of the liquid is measured at a mathematically defined point in or near the primary element. It is critical that the sensing element be mounted at this location. That level measurement is then used to calculate the flow rate of the stream.

Primary measuring devices, i.e. flumes and weirs, are carefully engineered and manufactured to close dimensional tolerance. It is important that the primary measuring device be carefully installed according to manufacturer's instructions. That will ensure the flow rate versus liquid head height relationship follows the published data.

1.2 System Description

There is a Drexelbrook open channel flowmeter for nearly every type and size of flume or weir. Each system consists of a 408-62XX Series electronic unit, a 700 Series flush mounted sensing element, and a 380 Series measuring cable. See Figure 1-1. The transmitter output is a standard 4-20 mAdc signal and is directly proportional to the flowrate. The sensing element is specifically sized and characterized, using flow as a function of level, for each type and size of flume or weir. It has no moving parts, is nonintrusive, and is intrinsically safe.

1.3 Models Available

1.3.1 Electronic Packages

303-301-XXX* (See Fig. 1-2):
Basic flow transmitter with 408-62XX Series electronic unit in standard 6" x 8" weatherproof housing, and a 700 series sensing element with integral coax. cable.

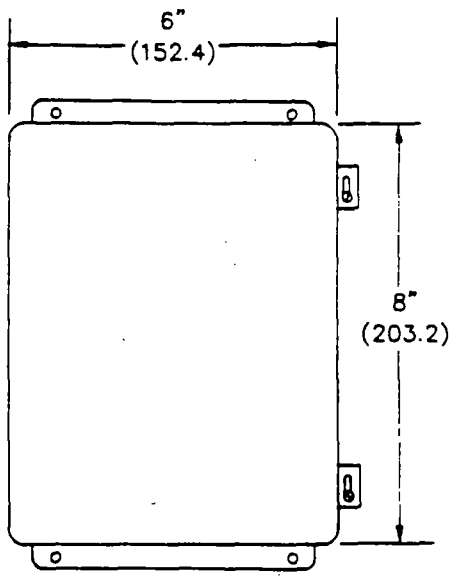

Figure 1-2
303-301 Series
Flowmeter

303-311-XXX* (See Fig. 1-3):
Indicating flow transmitter with 408-62XX Series electronic unit and digital meter in a 10" x 12" weatherproof housing, and a 700 series sensing element with integral coax. cable

*XXX -indicates sensing element reference number.

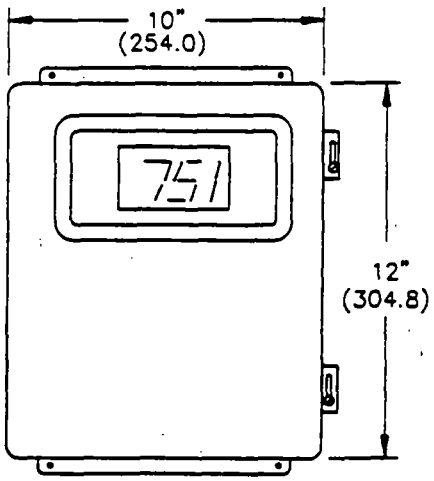

Figure 1-3
303-311 Series
Flowmeter

303-321-XXX* (See Fig. 1-4):
Line-powered indicating flow transmitter with 408-62XX Series electronic unit, digital meter, and 24 Vdc power supply in a 10" x 12" weatherproof housing, and a 700 series sensing element with integral coax. cable.

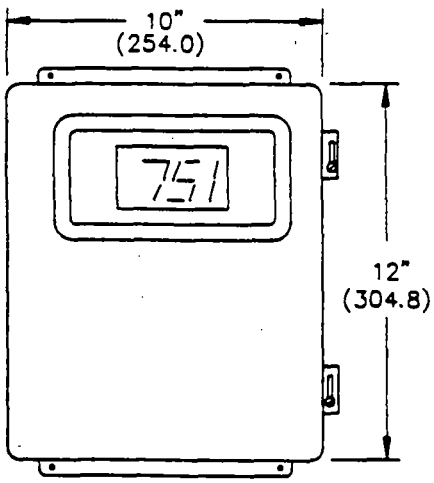

Figure 1-4
303-321 Series
Flowmeter

*XXX -indicates sensing element reference number.

303-331-XXX* (See Fig. 1-5):
Line-powered totalizing flow transmitte with 408-62XX Series electronic unit, digital meter, 45 Vdc power supply, integrator with 7-digit non-resettable totalizer, in a 14" x 16" weatherproof housing, and a 700 Series sensing element with integral coax. cable.

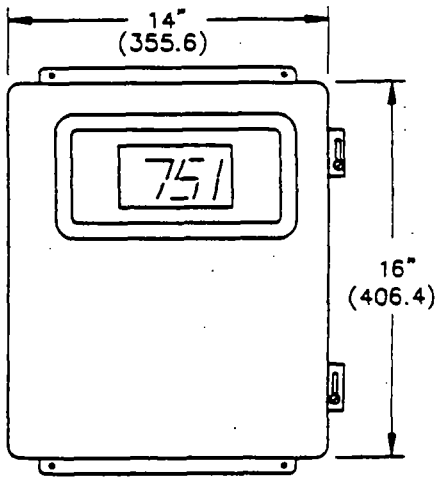

Figure 1-5
303-331 Series
Flowmeter

303-341-XXX* (See Fig. 1-6):
Line-powered totalizing/sampler activating flow transmitter with 408-62XX Series electronic unit, digital meter, 45 Vdc power supply, integrator with 7-digit non-resettable totalizer, sampler activator, in a 14" x 16" weatherproof housing, and a 700 Series sensing element with integral coax. cable.

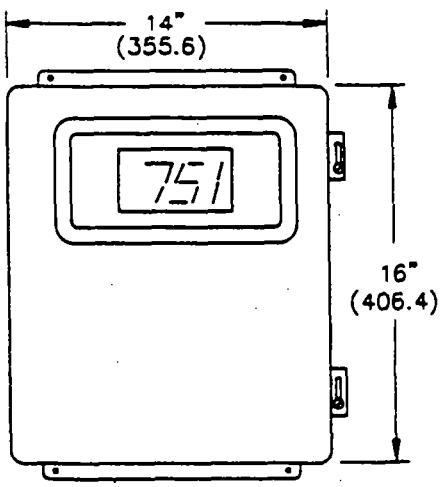

Figure 1-6
303-341 Series
Flowmeter

303-351-XXX* (See Fig. 1-7):
Portable battery-operated flow transmitter with 408-61XX Series electronic unit (.25-1.25 mAdc), analog meter, 12 Vdc battery, integrator with 6-digit resettable totalizer, a 2 1/2" strip chart recorder in a 14" x 16" weatherproof housing, and a 700 Series sensing element with integral coax. cable.

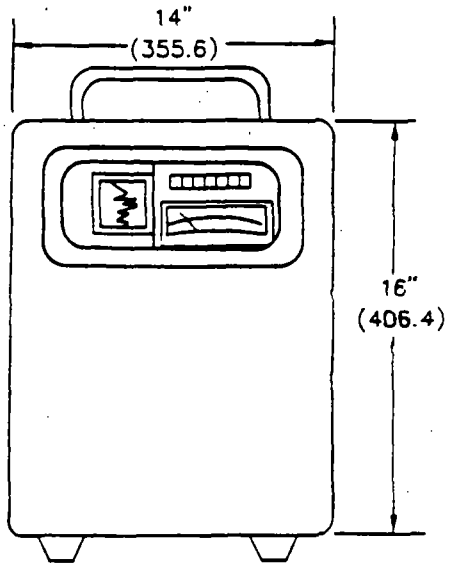

Figure 1-7
303-351 Series
Flowmeter

***XXX** -indicates sensing element reference number.

Options:

- NEMA 4 Epoxy Coated Housing
- NEMA 4X fiberglass Housing
- Analog Meter
- Special Analog Meter Scale
- Time Delay (0-30 Sec.)
- Resettable Totalizers (Models 303-331-XXX, 303-341-XXX only)
- 2 1/2" Strip-Chart Recorder (Models 303-331-XXX, 303-341-XXX only)
- Radio Frequency Interference (RFI) Filters

1.3.2 Sensing Elements

Each flush sensing element for open channel flow measurement includes a 25-foot integral measuring coax. cable. The cable length can be extended to 100 feet with a Drexelbrook "long cable kit". The sensing element can also be purchased with integral cable up to 100 feet.

Standard sensing elements are available for use with any flume or weir having the appropriate power law of flow rate vs. level.

700-701-XXX*:
Flush sensing element, linear non-characterized for level measurement in flumes and weirs.

700-702-XXX*:
Flush sensing element characterized for open channel flow measurement in Leopold-Lagco® flumes.

700-703-XXX*:
Flush sensing element characterized for open channel flow measurement in Parshall flumes, Cipolletti (trapezoidal) and Rectangular weirs.

700-704-XXX*:
Flush sensing element characterized for open channel flow measurement in Palmer Bowlus flumes.

700-705-XXX*:
Flush sensing element characterized for open channel flow measurement in "V" notch weirs.

***XXX** indicates sensing element reference number for specific flume/weir size and flow rate.

Note: Characterized, flush sensing elements are available for open channel flow nozzles and other primary measuring devices not listed above. Consult factory for details.

2.0 Electrical Specifications

A. **Power Requirement**
24 to 100 Vdc std.
120 ± 25 Vac 50/60 Hz for line powered units.

B. **Input Range**

408-6200 : 8.0 to 40,000 pF
408-6230 : 12.0 to 40,000 pF.

C. **Output Range**
4-20 mAdc

D. **Linearity**
± 0.5%

E. **Load Resistance**
$\frac{Vs^* - 13}{.02}$ = ohms (i.e. 550 ohms @ 24 Vdc
1600 ohms @ 45 Vdc)

*Vs = Power Supply Voltage

F. **Temperature Effect**
± 0.5% per 30°F or
±0.15pF whichever is larger

G. **Supply Voltage Effect**
.5% max per 10 volt change in dc power supply.

H. **Effect of Load Resistance**
0.2% or less for full resistance range at 24 Vdc supply.

I. **Response to Step Change**
20 milliseconds, std. (to 90% of final value)
0-30 seconds available in time delay units.

J. **Ambient Temperature**
-40° to + 140°F (-40 to 60C).

K. **Calibration Adjustments**
Step Zero, Fine Zero, Step Span, Fine Span

L. **Lowest permitted resistance** (sensing element to ground): 100KΩ

M. **Sensing Element Max. Temperature Rating**
175°F (80°C)

N. **Measuring Cable**
Three-terminal guarded coaxial cable.
.51" O.D. at largest point.
160°F temp limit.

O. **Intrinsic Safety**
Sensing element and cable are intrinsically safe for Class I, Groups A,B,C, and D; Class II, Groups E,F, and G (Div. 1 and 2).

Electronic unit and signal wires are intrinsically safe for Class I, Groups C and D; Class II, Groups E, F, and G (Div. 1) when powered by an intrinsically safe power supply. Non-incendive for Class I, Group A,B,C and D; Class II, Groups E,F, and G (Div. 2).

3.0 Theory of Operation

The Drexelbrook 303-300 Series Open Channel Flowmeter consists of an electronic unit and a characterized, flush sensing element with integral coax. cable. The sensing element is attached flush to the channel wall by means of a mounting track, and connected to the electronic unit by the integral coax. cable. The output of a low-voltage radio-frequency oscillator is applied to the sensing element via the cable.

Level variations in the channel, corresponding to changes in flow in the stream, will cause a very small amount of current to flow between the sensing element and ground. The sensing element is designed to the characteristics of the channel, so that its output current is linear with flowrate. The admittance - both capacitive and resistive components of the current - is measured in the electronic unit by comparing the sensing element with a standard supply across a wide range bridge circuit. Cable characteristics have no effect on calibration.

The bridge output voltage is applied to a detector circuit and then to a feedback amplifier. The resulting output current is directly proportional to the flowrate. The current is compatible with standard readout devices such as meters, recorders, alarm circuits, and electro-pneumatic transducers.

4.0 Installation

4.1 Unpacking

Carefully remove the contents of the shipping carton and check each item against the packing list before destroying any packing materials. If there is any shortage or damage, report it immediately to the factory.

4.2 Mounting The Electronic Unit

The Drexelbrook open channel flow electronic units are designed for field mounting, but should be installed in a location that is as free as possible from vibration, corrosive atmospheres, and the possibility of mechanical damage. Ambient temperatures should be between -40°F and + 140°F. For convenience at start-up, it is best to install the instrument in a reasonably accessible location. For mounting dimensions, see Figure 4-1, 4-2, and 4-3.

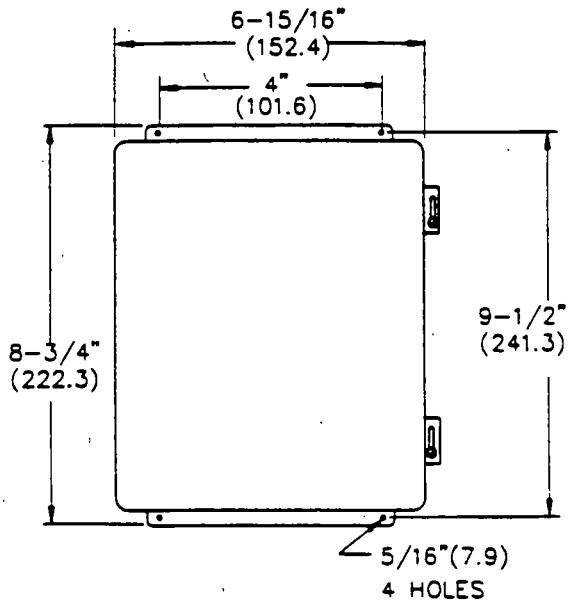

Figure 4-1
Mounting Dimensions of 303-301 Series Electronic Housing

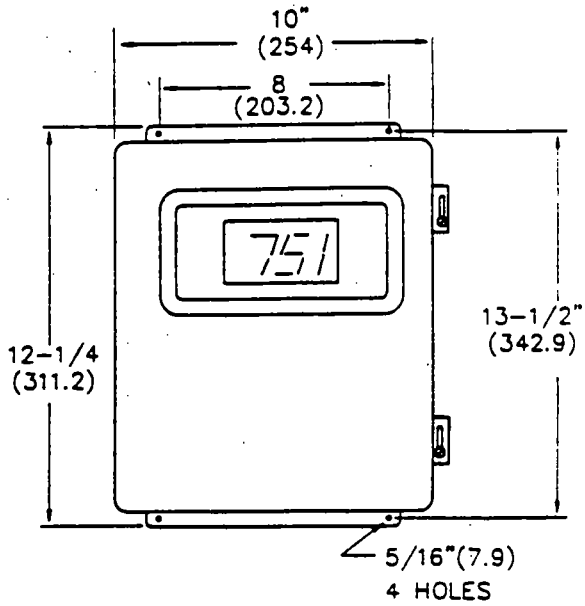

Figure 4-2
Mounting Dimensions of 303-311 and 321 Series Electronic Housing

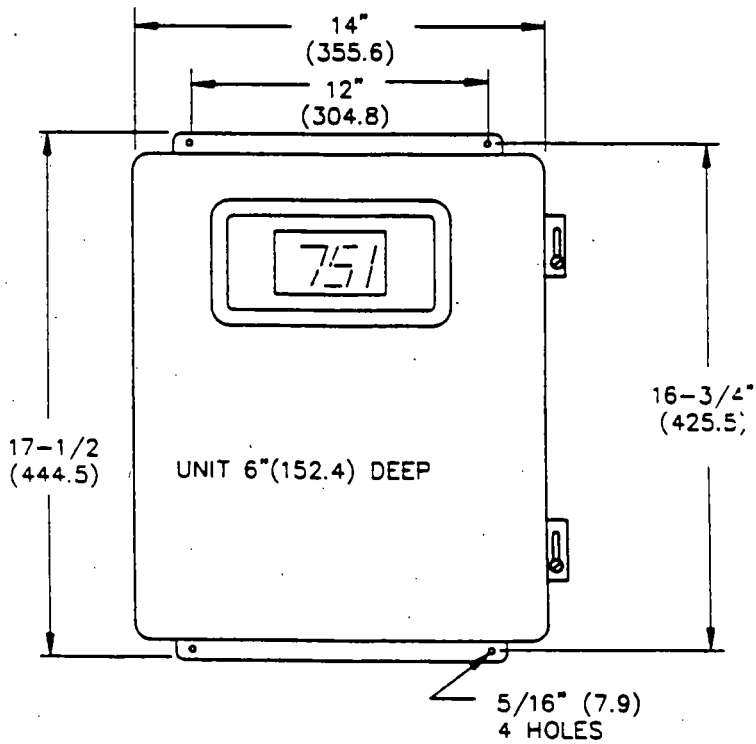

Figure 4-3
Mounting Dimensions of 303-331and 341 Series Electronic Housing

4.3 Mounting The Sensing Element

4.3.1 The Mounting Track

Drexelbrook open channel flow sensing elements are thin and flexible and will slide easily into the mounting track on the wall of the primary measuring device or flow channel. Several flume manufacturers provide flumes with tracks premolded into the flume wall. For flumes or weirs without mounting provisions, Drexelbrook can provide a mounting track that attaches to the weir or flume wall.

The track is mounted to the wall of the primary measuring device using the drive rivets supplied. Mark the rivet holes by using the mounting track as a template and drill the holes 1/4 inch in diameter approximately one inch deep. The number of holes needed depends on the mounting track supplied. For positioning of the sensing element mounting track in the primary measuring device, see one of the following sections 4.3.3 to 4.3.5 pertaining to the appropriate flume or weir.

Once the track is in place, slide the sensing element into the track with the scale side facing the open stream. See Figure 4-4. Mount the angle bracket to the top edge of the flume or weir as shown in Figure 4-4. With the angle bracket properly in place, fasten the sensing element to the angle bracket with the lock down bolt. This will secure the sensing element in the mounting track. To ensure proper vertical positioning of the sensing element, loosen the nut on the positioning bushing. Adjust the sensing element to position the tip of the sensor at the zero flow level. The positioning bushing will move up and down in its slot. Retighten the nut on the positioning bushing and check that the tip of the sensing element is still at the zero flow level.

For high walled flumes and weirs, when the angle bracket is not used, drill a 1/2 inch hole using the sensing element slot for the lockdown bolt as a template. See Figure 4-5. Install the expanding wall anchor supplied to the wall of the flow channel. Secure the sensing element in place by fastening the lockdown bolt to the wall anchor as shown in Figure 4-6.

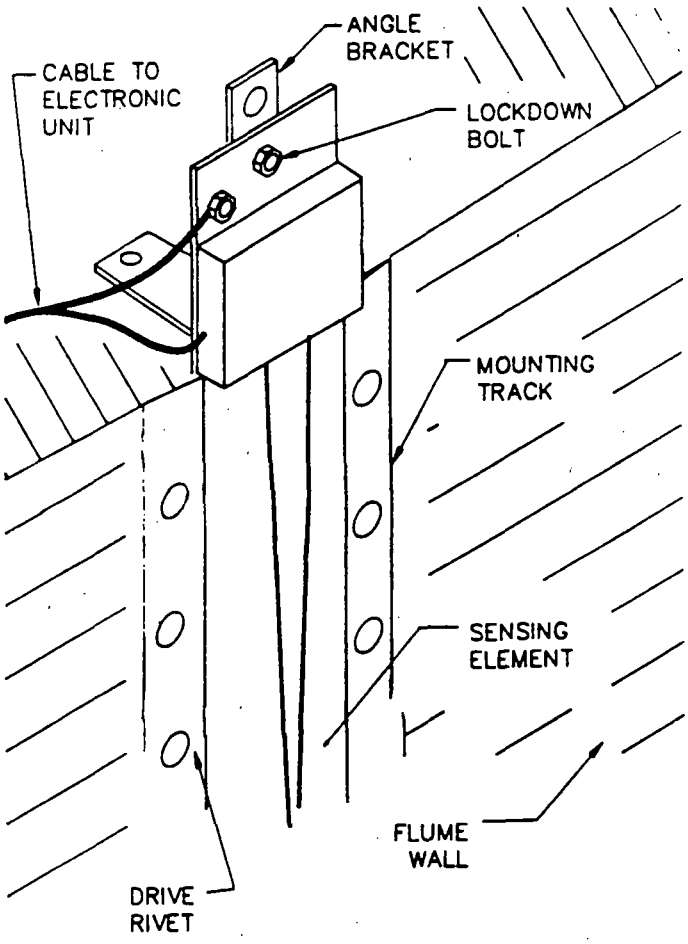

Figure 4-4
Standard Mounting of the Sensing Element and Track

To remove the sensing element, unscrew the lockdown bolt and lift up gently on the head of the sensing element to slide it out of the mounting track. This allows for replacement of the sensing element without readjusting for zero flow.

When it is not possible to drill holes in the wall of the primary element, the track can be mounted to a stiff piece of fiberglass sheet which is pressed against the wall and fastened at the top.

4.3.2 The Ground Reference Plate

(See 290-1000-XXX-CD in 9.0 Appendix)

Drexelbrook recommends installing a metal ground reference plate (in most applications) in the flow channel. The ground plate provides a stable reference for the sensing element to "see" and minimizes fluctuations in output signal due to variations in material conductivities. It should be at least 12 inches wide, and as long as the total

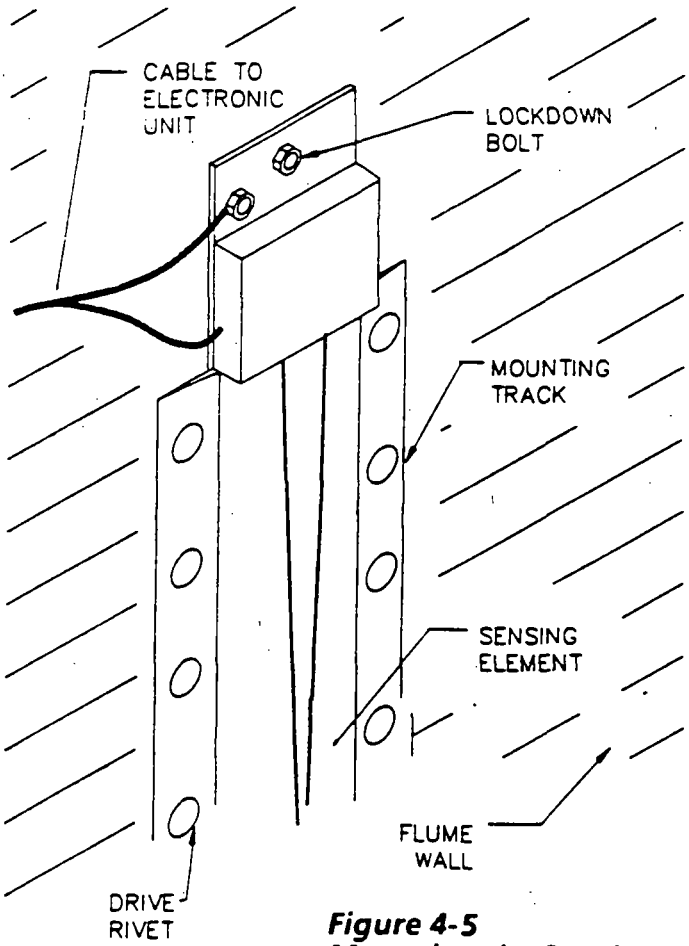

Figure 4-5
Mounting the Sensing Element in High-Walled Flumes

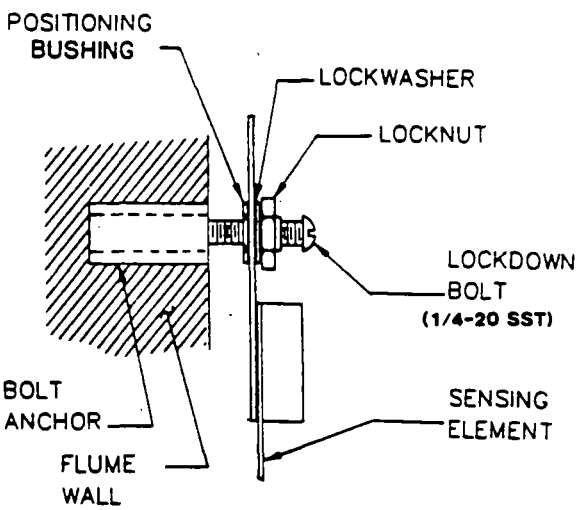

Figure 4-6
Anchoring the Sensing Element in a High-Walled Flume

insertion length of the sensing element. The ground plate should be made of non-corroding metal, such as stainless steel, and be mounted per the installation drawing included with the flowmeter. In all cases, the plate should reach low enough into the flow channel to be in contact with the stream at all times, even during low flow conditions. Make sure that the plate does not cause turbulence or change the flow characteristics of the channel. Finally, connect the stainless steel ground wire from the ground plate to the ground screw on the sensing element. A Series 290 ground plate is available from Drexelbrook.

4.3.3 Mounting in a Parshall Flume

The sensing element and mounting track for a Parshall Flume should be attached flush to the wall of the converging section of the flume, at a location of 2/3A. See Figure 4-7. The sensing element should be inserted into the mounting track with the tip of the sensing element at the zero reference level of the flume. Consult factory for "Submerged Flow" installation.

4.3.4 Mounting in Palmer Bowlus and Leopold Lagco® Flumes

The sensing element for Palmer Bowlus flumes should be mounted at a distance one-half D (pipe diameter or channel width) upstream from the end of the throat section. For the Leopold Lagco® flumes, it should be mounted on a 5-inch straight section, 0 to 3 inches ahead of the input end of the flume. See Figure 4-8A and 4-8B. Using the positioning bushing on the backside of the sensing element lockdown bolt, adjust the sensor so the tip is 1/4 inch below the zero flow level. Tighten the positioning bushing to secure the position of the sensing element.

4.3.5 Mounting in Weirs

The sensing elements for V-notch, rectangular and Cipolletti weirs should be mounted to the inside of the weir wall, at a distance of 4 times the maximum expected head height of the stream from the edge of the weir plate. See Figure 4-9A, 4-9B, and 4-9C. In this position, the sensing element will not b affected by the "drawdown" of the stream as it falls over the edge. The tip of the sensing element should be on the same plane as the bottom of the weir opening (zero flow).

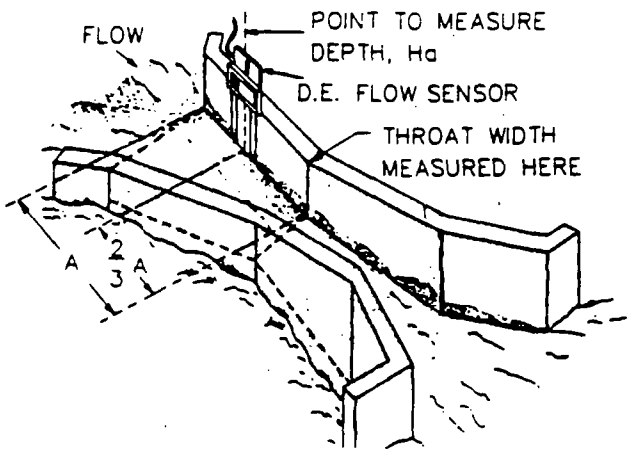

Figure 4-7
Mounting the Sensing Element in a Parshall Flume

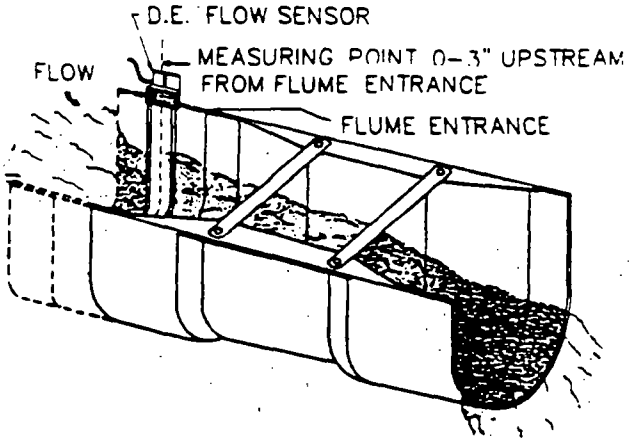

Figure 4-8B
Mounting the Sensing Element in a Leopold Lagco Flume

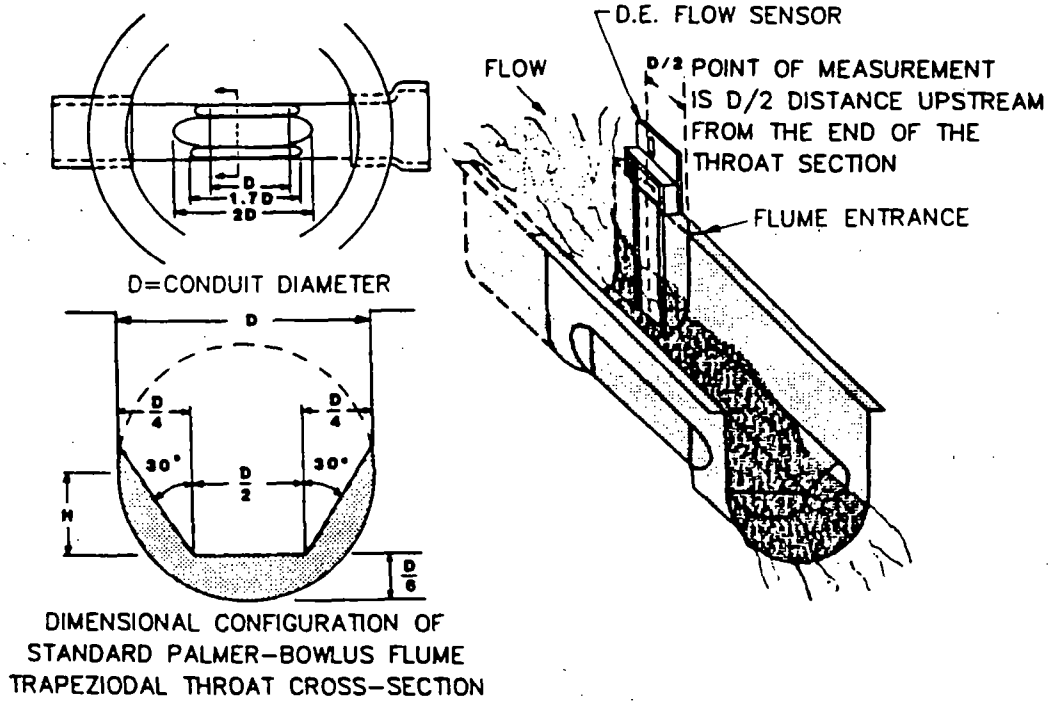

Figure 4-8A
Mounting the Sensing Element in a Palmer Bowlus Flume

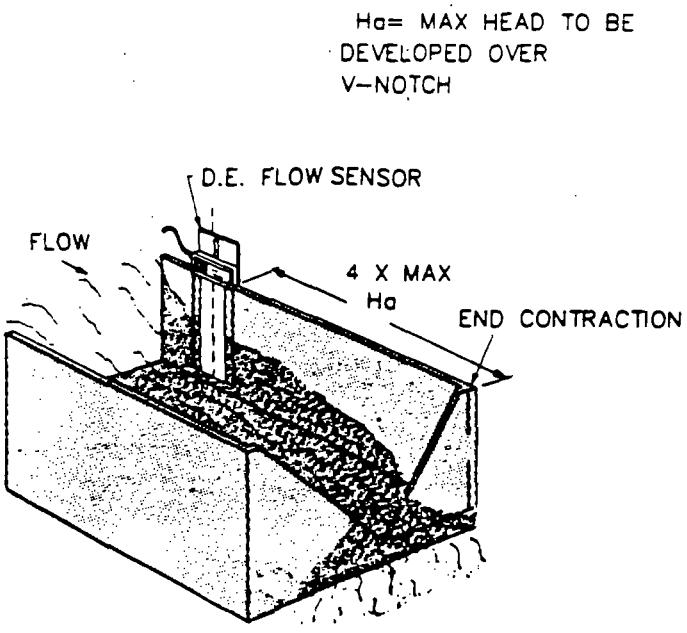

Figure 4-9A
Mounting the Sensing Element In a V-Notch Weir

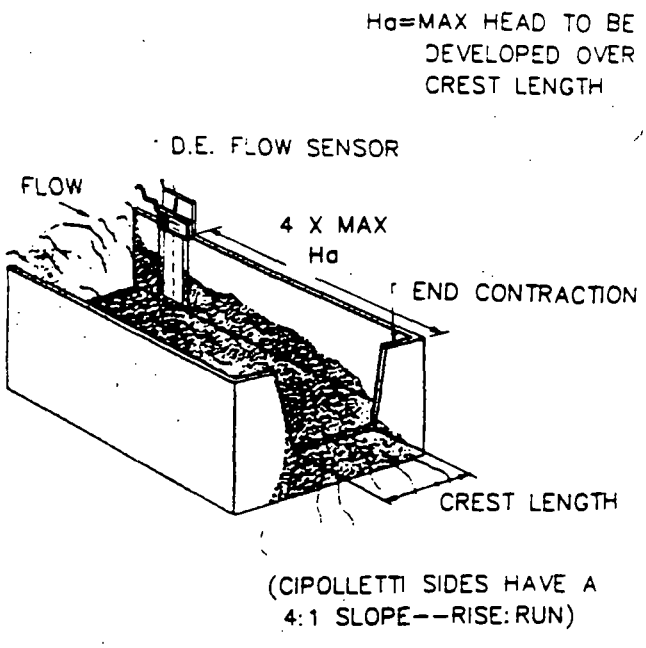

Figure 4-9C
Mounting the Sensing Element in a Cipolletti Weir

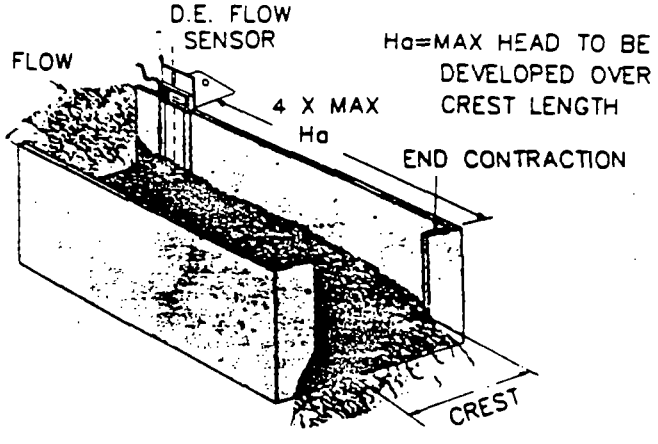

Figure 4-9B
Mounting the Sensing Element in a Rectangular Weir

4.4 Wiring the Electronic Unit

Due to low power consumption, the dc signal wires on 303-301 and -311 Series transmitters need only be light gauge. Twisted, shielded pairs are recommended. The wiring need not be in conduit. However, if it is run in conduit or wire trays, be sure it is not in close proximity to high voltage or high current lines. See Figures 4-10 and 4-11.

The ac wiring to 303-321, -331, and -341 Series transmitters should be done in accordance with local or national wiring codes. For connections, see Figures 4-12, 4-13, and 4-14.

The cable from the sensing element is connected to the terminal strip on the electronic unit chassis. See Figure 4-15. The cable connections are center wire (CW), ground (gnd) and shield (SH), which are terminated respectively to term. #9 (CW), term. #7 (gnd), and term. #8 (SH) of the electronic unit. Only coaxial cables supplied by Drexelbrook Engineering Company should be used to connect the electronic unit to the sensing element. Use of other cables can result in unstable calibration.

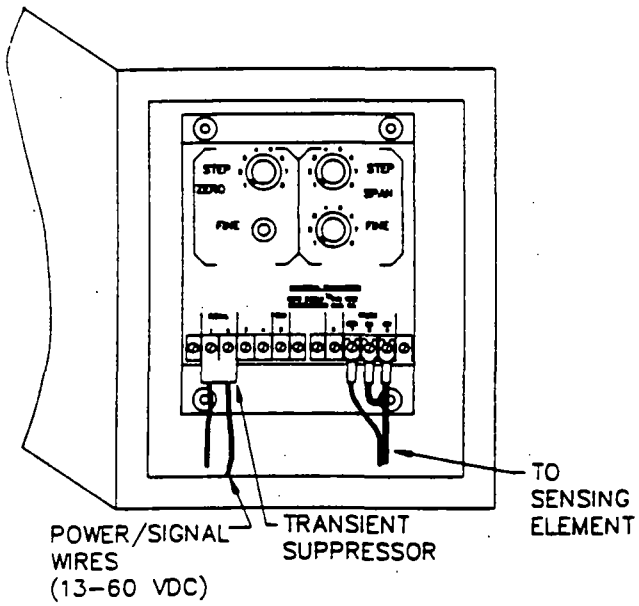

Figure 4-10
Power / Signal Connections to the 303-301 Series Flowmeter

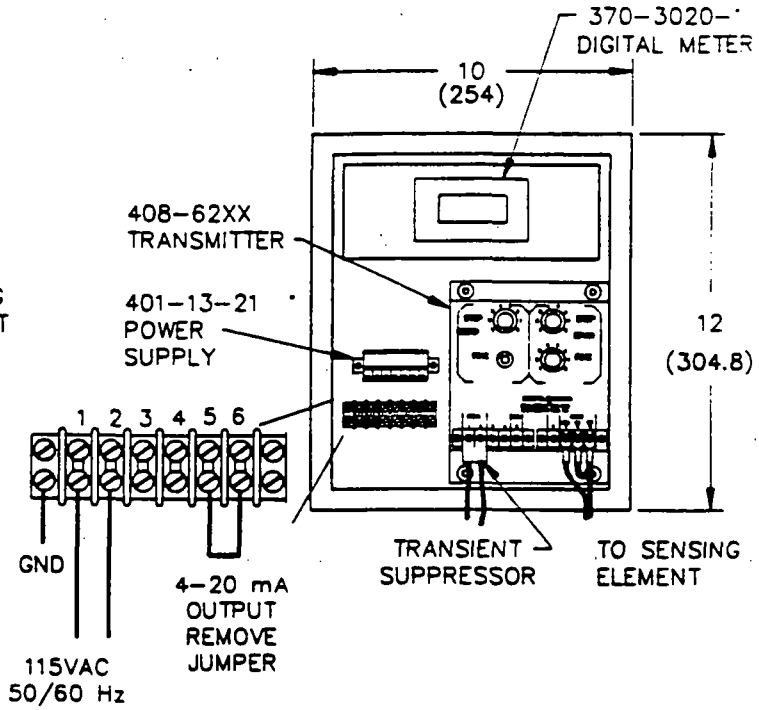

Figure 4-12
Power / Signal Connections to the 303-321 Series Flowmeter

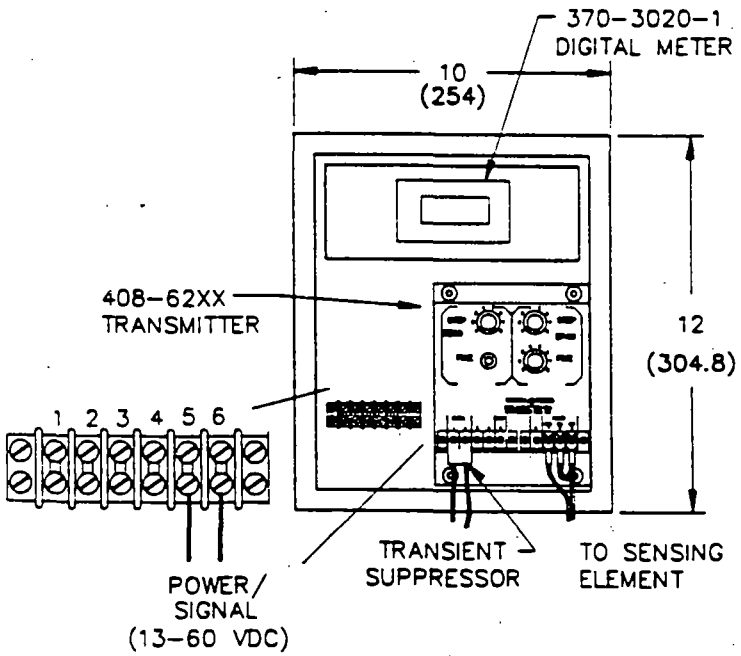

Figure 4-11
Power / Signal Connections to the 303-311 Series Flowmeter

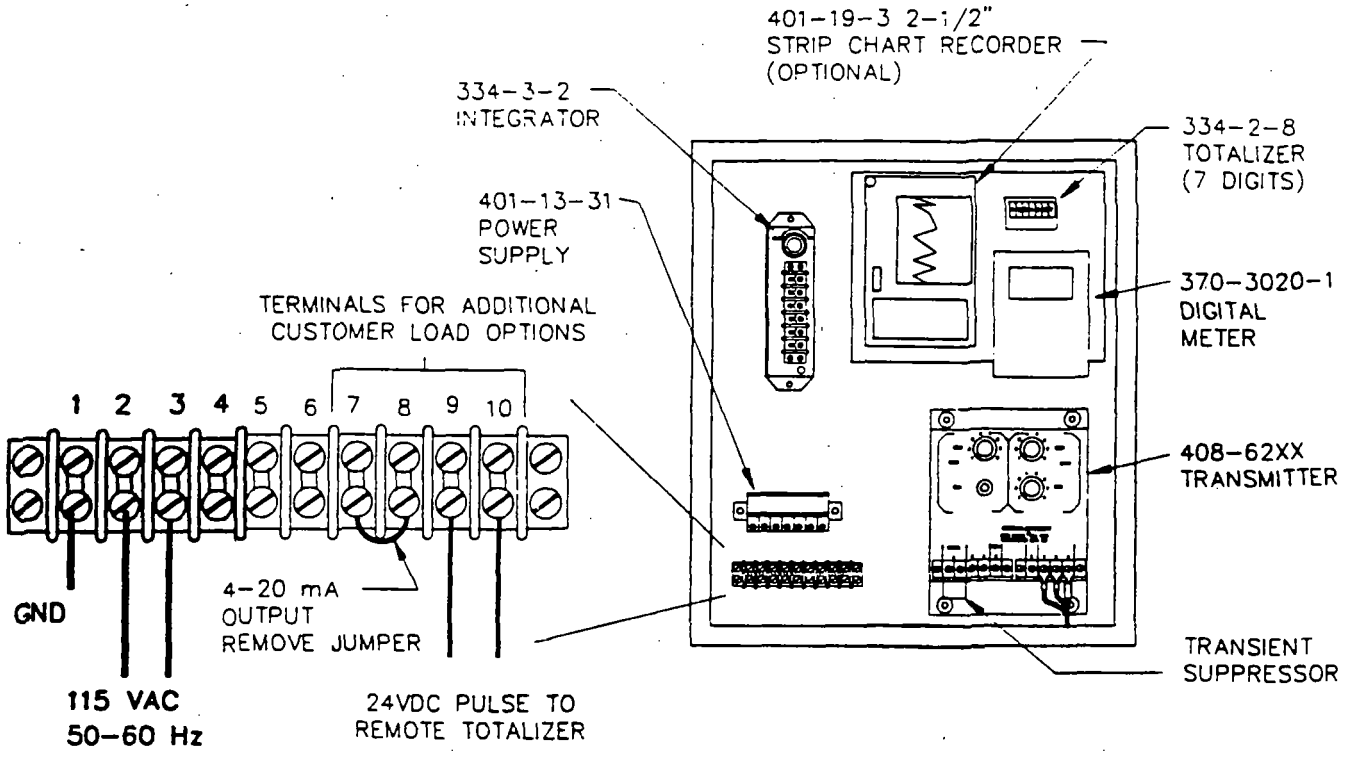

Figure 4-13
Power / Signal Connections to the 303-331 Series Flowmeter

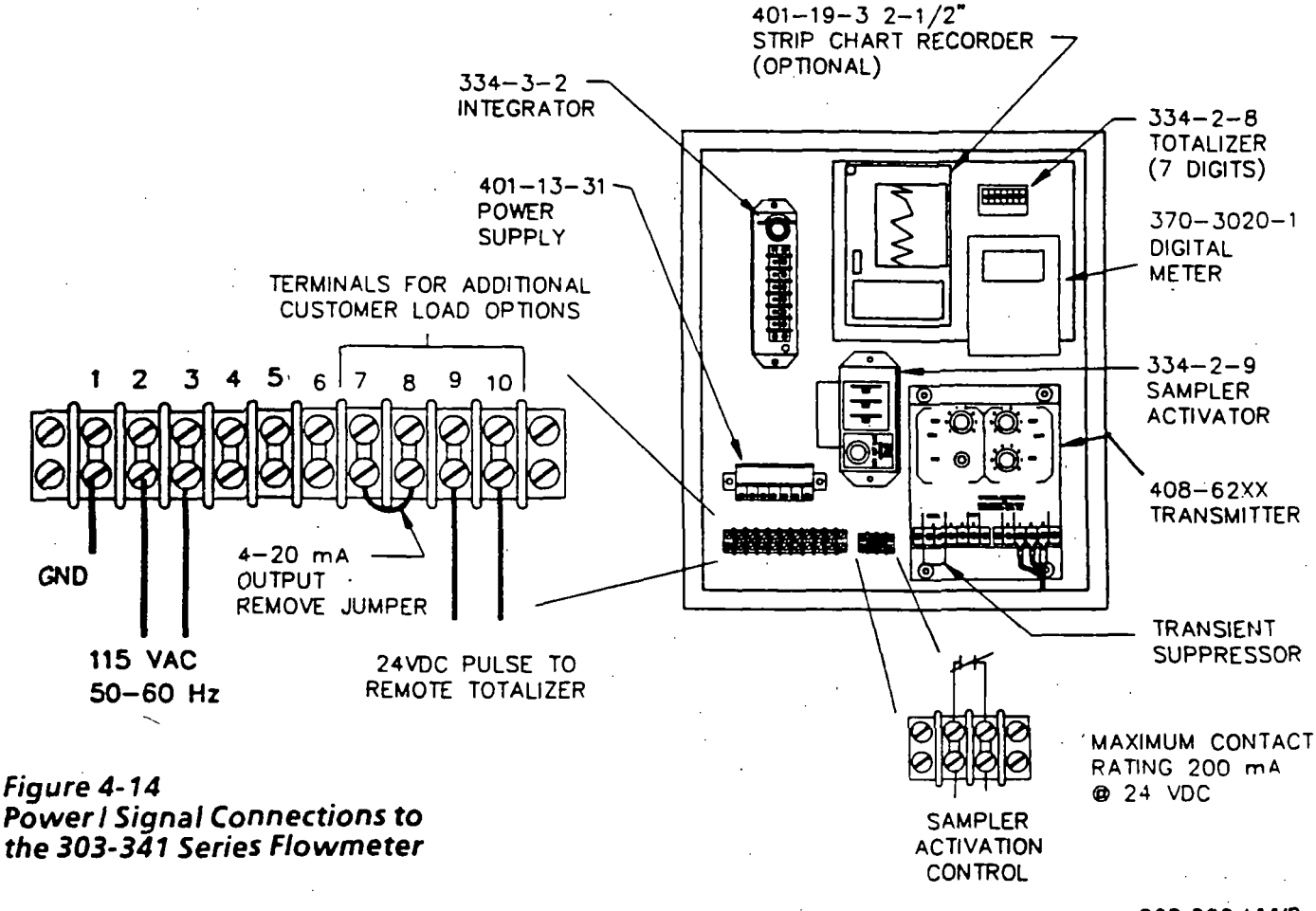

Figure 4-14
Power / Signal Connections to the 303-341 Series Flowmeter

4.5 Wiring the Sensing Element

4.5.1 Integral Cable

Drexelbrook open channel flow flush sensing elements are furnished standard with 25 feet of three-terminal cable integral with the sensing element. See Fig. 4-15 for sensing element cable connections to the electronic unit. The cable should not be run in conduit where substantial moisture could accumulate.

4.5.2 Long Cable Kit

If a cable length of more than 25 feet is needed, that distance can be extended, in the field, to 100 feet by using a long cable kit. See Figure 4-16. (The sensing element can also be purchased with integral cable up to 100 feet.)

Note: When cable connections are verified, condulet should be potted with 2 part silicone or melted paraffin.

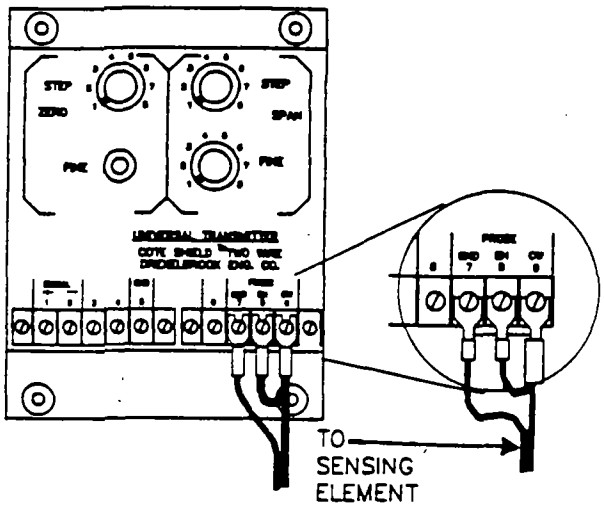

Figure 4-15
Sensing Element Cable Connections to the Electronic Unit

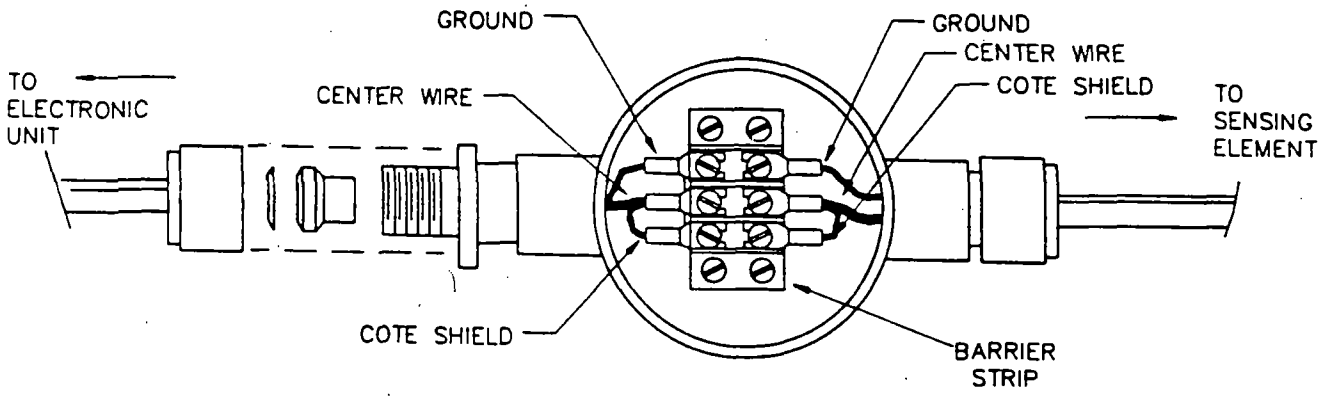

Figure 4-16
Wiring the Long Cable Extension Kit

5.0 Operation/Calibration

5.1 Start-Up

Be sure the input power to the electronic unit chassis is between 24 and 100 Vdc. This can be accomplished by checking the voltage on terminals #1 and #2 of the electronic unit. Check all wiring connections, observing polarity of the output loop.

5.2 Calibration Controls and Adjustments

5.2.1 Zero and Span Controls

There are four main calibration controls on the chassis front panel. They are Step Zero, Fine Zero, Step Span, and Fine Span. See Figure 5-1.

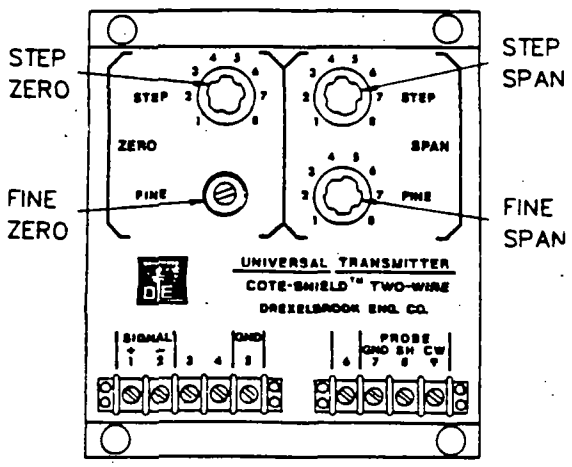

Figure 5-1
Zero and Span Controls on the Electronic Unit

The Step Zero and Fine Zero controls work together to provide continuous adjustment of the minimum current point. Each Step Zero position advances the minimum current point approximately 60 pF, while the Fine Zero provides continuous adjustment between each step.

Note: Under normal circumstances, the interaction between zero and span should be less than 1%. If this interaction becomes greater than 1%, consult factory for assistance.

The Step Span and Fine Span controls also work together to provide continuous adjustment of the change in capacitance required to produce full scale current. Each Step Span position advances the range to approximately three times the previous setting. The Fine Span provides continuous adjustment between the Step Span positions.

5.2.2 Time Delay Control

Time delay or adjustable damping is available on Drexelbrook open channel flow transmitters. It is a RC time constant circuit that is variable over a range of zero to 30 seconds. Calibration of the transmitter is done with the time delay control turned off. See Figure 5-2. After calibration is complete, the time delay can be added, without affecting the calibration, by turning the control knob clockwise. Occasionally, when the time delay is first turned on, there is a temporary upset in the transmitter output until the circuit settles out.

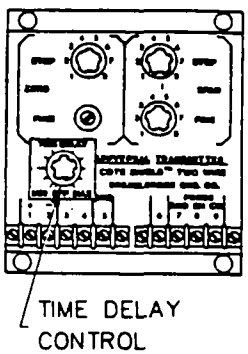

Figure 5-2
Time Delay Control

5.2.3 Fail-Safe Selector

The fail-safe link on the open channel flow electronics unit is set by the factory and normally does not need to be changed. However, if necessary, it can be reset by field personnel.

The fail-safe selector determines whether increasing or decreasing level

(flowrate) will cause the output current to increase. It is a moveable link located on the P.C. board on the right side of the electronic unit chassis. See Figure 5-3.

The instrument is supplied as low-level fail-safe unless otherwise specified. However, it may be changed in the field, after which the instrument must be recalibrated.

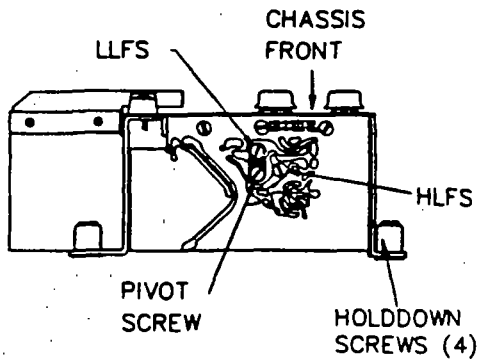

Figure 5-3
Fail-Safe Selector

To change the fail-safe of the instrument, take the chassis out of the housing by removing the four holddown screws and lifting up. See Figure 5-3. To change the fail-safe link, loosen the fail-safe screw that the link is attached to and swing the link to the other fail-safe screw. When the link is in place, tighten down both screws. Do not force.

Low-Level Fail-Safe (LLFS) is also called direct acting. This is the most commonly used fail-safe position for continuous instruments. Output current increases as level (flowrate) increases. In the event of most probable failures, the output current will drop and indicate low level (flowrate).

High-Level Fail-Safe (HLFS) is called reverse acting. Output current increases as level (flowrate) decreases. In the event of most probable failures, output current will drop indicating high level (flowrate).

5.3 Transmitter Calibration Procedures

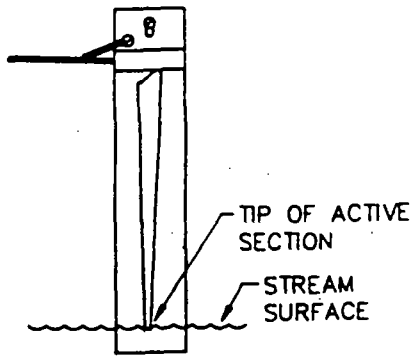

ZEROING THE SENSING ELEMENT
FIG 5-4A

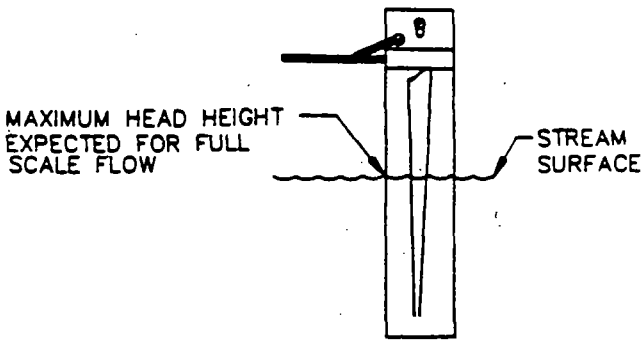

SPANNING THE SENSING ELEMENT
FIG 5-4B

Figure 5-4
Calibrating the Sensing Element in the Flow Stream

5.3.1 Calibration In Stream (Insitu)

It is always best to calibrate the system in the flume or weir. During calibration, be sure you are not touching the face of the sensing element.

A. Set the Fine Span control to the extreme clockwise (CW) position. Do not force. See Figure 5-1.

B. Set the Step Span control to position #1.

C. With the tip of the sensing element active section just touching the stream surface, adjust the Step Zero and Fine Zero controls until the output is minimum (i.e. 4 mA). See Fig. 5-4A.

D. Immerse the sensing element in the stream up to the mark corresponding to the maximum head height expected for full scale. Output current should now exceed full scale current. See Figure 5-4B.

E. Turn the Step Span control clockwise (CW) until the output is just less than full scale. Then turn back the Step Span control one position.

F. Turn the Fine Span control counter-clockwise (CCW) until the output is full scale (i.e. 20 mA).

G. With calibration complete, the output reading will be linear with the flow rate.

Note: The maximum flow rate corresponding to full scale for Parshall Flumes and Rectangular Weirs can be obtained by consulting tables on flow rate vs. head height. For 3/2 power law probes, the maximum head height corresponding to full scale should be greater than 1/3 the maximum calibrated length of the sensing element to insure optimum accuracy. For example, a sensing element with a 20 inch maximum calibrated length should be used with a maximum head height for full scale flow of greater than 6 inches.

5.3.2 Calibration in a Bucket

Although it is always best to calibrate th system in the flume or weir, sometimes this is not possible. In this situation, a calibration can be accomplished in a bucket.

A. Fill a well grounded, bare metal bucket with process water to simulate the stream. Attach a jumper wire between the ground screw on the sensing element and the bucket. See Figure 5-5.

B. Set the Fine Span control on the electronic unit to the extreme clockwise (CW) position. Do not force. See Figure 5-1.

C. Set the Step Span to position #1.

D. With the tip of the sensing element at the surface of the water, adjust the Step Zero and Fine Zero controls for minimum output, or zero flow (i.e. 4 mA), depending on the output range.

E. Immerse the sensing element to the level which corresponds to th maximum expected flow rate. See Figure 5-5.

Note: The scale markings on the sensing element are in 1/2 inch increments and correspond to the vertical level in the flow channel.

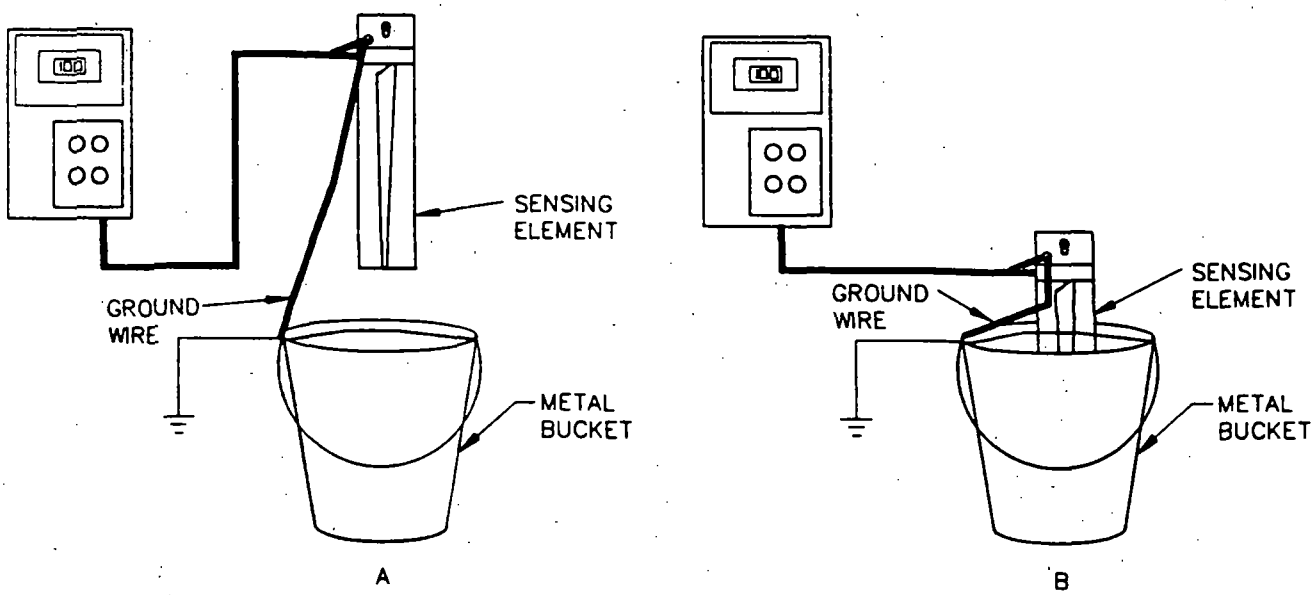

Figure 5-5
Calibrating the Sensing Element in a Bucket

F. Turn the Step Span control clockwise (CW) until the output is just less than full scale, then turn back the Step Span control one position.

G. Turn the Fine Span control counter-clockwise (CCW) until the output is full scale (i.e. 20 mA).

H. Calibration is complete. Slide the sensing element into its mounting track and secure it in place.

5.4 Integrator-Totalizer Calibration

303-331 Series, 303-341 Series, and 303-351 Series flow transmitters are equipped with an integrator- totalizer. See Figure 5-6. The count rate control on the integrator is a 10 turn pot that reads 1.11 in the full counterclockwise position. The 1.11 setting corresponds to 111 counts/hour at the full scale current (20 mA) and the 11.1 setting corresponds to 1111 counts/hour at the full scale current (20 mA). Normally the system is supplied with the count rate control factory-set to the appropriate count rate. If the count rate needs adjustment,

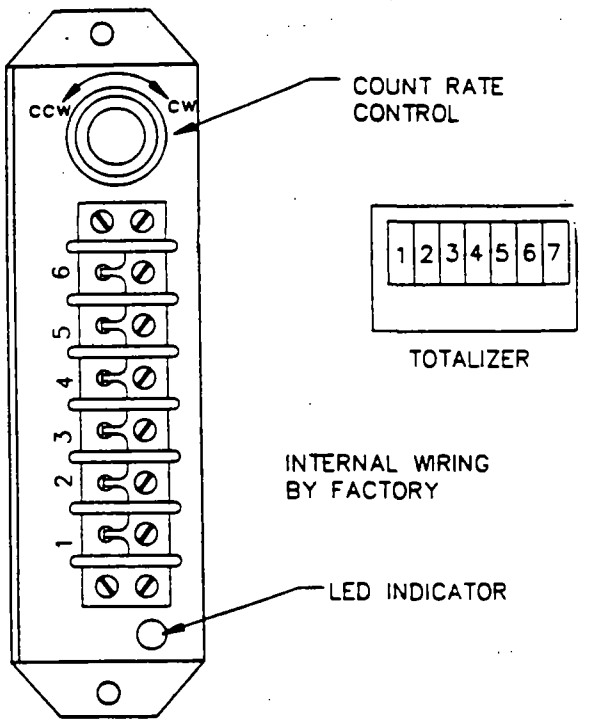

Figure 5-6
Integrator-Totalizer Adjustments

it can be reset in the field. (See Figure 4-14 for 24 Vdc pulse wiring for remote use.)

A. Determine the maximum flow rate for full scale indication, and convert the flow to gallons per minute (GPM).

B. The following table shows count rate for maximum flow.

Totalizer Count Ranges

Max Flow in GPM	Gals/Count (Count Rate)
1.8 to 18.5	1
18.6 to 185	10
186 to 1852	100
1853 to 18516	1000
18517 to 185166	10,000
185167 plus . . .	100,000

C. Multiply the flow rate in GPM by 60 to obtain gallons per hour.

D. Divide the gallons per hour by the count rate corresponding to the max flow rate in GPM.

E. Divide the result of Step D by 100 for the count rate control setting.

F. Set this number on the count rate control. With calibration complete, the instrument will now indicate totalized flow.

Example:

A. The maximum flow rate is determined to be 5156 GPM.

B. According to the totalizer count ranges (see table), 5156 GPM corresponds to 1000 gallons/count.

C. 5156 x 60 = 309,360 gallons per hour

D. 309,360 ÷ 1000 = 309.36 counts per hour.

E. 309.36 ÷ 100 = 3.09 = count rate control setting.

5.5 Sampler Activator Calibration

303-341 Series flow transmitters are equipped with a sampler/activator. See Figure 5-7. The sampler/activator provides a momentary contact closure (SPST, n.o. 200 mA max @ 24 Vdc) for operating a sampler at pre-set intervals. (See Figure 4-14 for customer wiring of the SPST contact.) This contact closure duration is adjustable from 60m sec to 2 sec. The sampler/activator consists of a pulse width

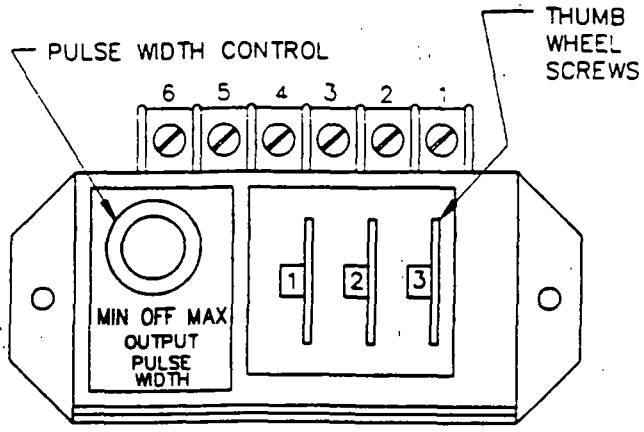

Figure 5-7
Sampler Activator Adjustments

control and a 3-digit thumbwheel switch. The sampler activator counts pulses from the integrator until the number of pulses equals the thumbwheel setting. At this time, the contact closes for the preset interval and the sampler activator resets itself.

Use the following instructions to calibrate the sampler-activator.

A. Determine the flow units per count (gallons/count) from the integrator setting.

B. Decide on the number of units desired per sample.

C. Divide units per sample by units per count to determine the number of counts per sample.

i.e. $\frac{\text{gallons/sample}}{\text{gallons/count}} = \frac{\#\ \text{counts}}{\text{sample}}$

D. Set the resulting number from Step C on the thumbwheel switch. See Figure 5-7. If that number is greater than 999, it will be necessary to make an adjustment on the P.C. board on the back of the sampler/activator unit. See Figure 5-8. For sample counts below 999, the jumper on the P.C. board will be in the X1 (top) position. For counts over 999, move the jumper to the X10 (bottom) position, divide the number obtained in Step C by 10, and set it on the thumbwheel switch. The count range will now be from 10 to 9990.

E. The pulse width control determines the amount of time the relay contact will be closed each time the sampler/activator

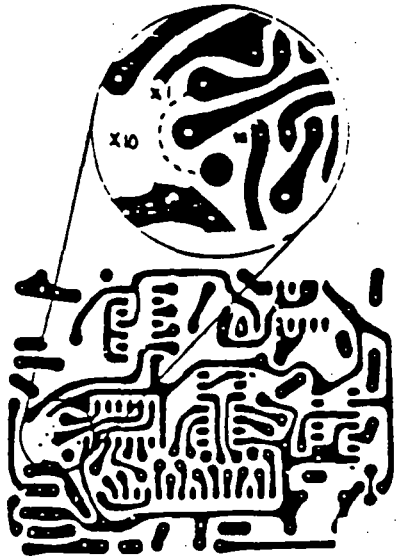

Figure 5-8
Sampler Activator P.C. Board

reaches the number of pulses set on the thumbwheel switch. With the pulse width control set at midscale, the relay contact closed for about 1/2 second per sample. Turning the control clockwise (CW) will increase the time up to a maximum of 2 seconds, and turning it counterclockwise (CCW) will decrease the time to a minimum of 60 milliseconds. By turning the knob one step CCW beyond the minimum relay closure time, you can turn off the sampler/activator without affecting any other part of the system.

F. Once the counts per sample are set on the thumbwheel switch, and the contact closure time is set on the pulse width control, calibration of the sampler-activator is complete.

Example:

A. Gallons per count = 1000

B. One sample is desired every 10,000 gallons.

C. 10,000 ÷ 1000 = 10 counts per sample.

D. With the multiplier jumper in the X1 position, set the thumbwheel switch to 0

E. Set the pulse width control to the desired contact closure time.

5.6 Strip Chart Recorder Operation

Optional 2 1/2" Strip Chart Recorders can be provided with 303-331 Series and 303-341 Series flow transmitters. See Figure 5-9. Refer to the recorder instruction manual for operation procedures.

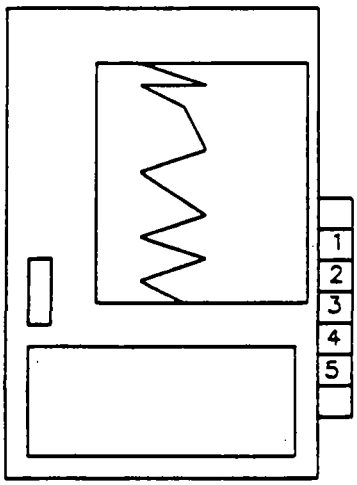

Figure 5-9
Strip Chart Recorder
(Optional)

6.0 Troubleshooting

6.1 Introduction

The 303-300 Series instruments are designed to give years of dependable service.

A spare electronic chassis is recommended for every 10 units so that, in case of a failed unit, a critical application will not be held up while the unit is returned to the factory for repair.

If a difficulty occurs when operating your measurement system, divide the system into its component parts and test each part individually for proper operation.

These troubleshooting procedures should be followed in checking out your system. If attempts to locate the difficulty fail, notify your local factory representative or call the factory direct and ask for the service department.

6.2 Testing the 408-6200 Series Electronics

6.2.1 Operational Check

A. Remove the sensing element and signal wires from the transmitter.

B. Be sure the Fail-Safe link is in the low-level fail-safe position. See Figure 6-1.

C. With a pencil, mark the positions of all controls on the faceplate in order to return to them.

D. Put the Step Span control in Position #1 and the Fine Span in the full clockwise (CW) position. Put the Step Zero in Position #1 (most sensitive position). See Figure 6-2.

E. Observing polarities, connect a DC milliammeter and DC power supply (24 to 100 volts) in series, and complete the loop by connecting to Terminals 1 and 2. See Figure 6-3.

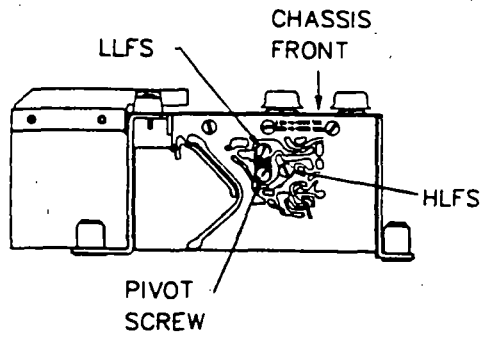

Figure 6-1
Fail-Safe Selector

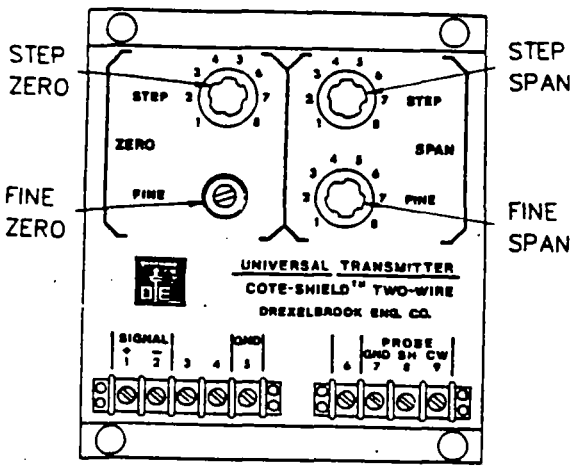

Figure 6-2
Zero and Span Controls

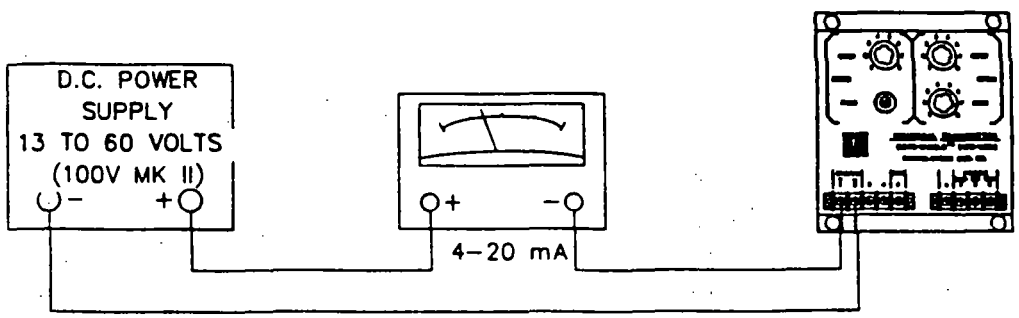

Figure 6-3
Power / Signal Wiring

F. Adjust the Fine Zero until the meter reads 0% (4 mA).

G. Turn the Fine Zero control one turn further clockwise. The output should read greater than 30% if the electronic unit is a 408-6230 and greater than 50% if it is a 408-6200.

   If so, the instrument is probably working correctly. Each turn of the Fine Zero changes the input of a known amount. This checks the operation and gain of the transmitter.

H. If the difficulty has not been located at this point, proceed to the next checkout procedure.

6.2.2 Drift Check

If the output of a transmitter seems to be drifting, it is important to determine whether the drift is in the transmitter or in the sensing element. (A properly connected cable never drifts).

A. Remove the sensing element cable from the transmitter.

B. Without disturbing the dial settings, connect a capacitance standard or an NPO capacitor* across the probe-to-ground input. Adjust the capacitance standard or select a capacitor value that will bring the unit on scale.

*The capacitor should remain stable with changes in temperature.

C. Observe the reading over a 24-hour period to see if it is stable (± 1/2%).

D. If the reading is stable, the sensing element or the application must be the source of the drift. If the reading drifted, return the instrument for repair. Be sure to mark on the tag that the problem is drift. (List the capacitor size and mA deviation).

6.3 Checking the Two-Wire System Loop.

A. See Figure 6-4. With the sensing element disconnected, remove the power wires from Terminals 1 and 2 and measure the open circuit voltage from the power supply. Voltage should be between 13 and 100 Vdc.

B. Connect the signal wires to Terminals 1 and 2. Turn the Step Span and Step Zero controls to Position #1. Turn the Fine Span control completely clockwise (CW) and adjust the Fine Zero until 20 mA flows.

C. Measure the voltage between Terminals 1 and 2. Voltage should be between 13 and 100 Vdc. If there is less than the minimum 13 volts required, the loop has too much resistance or not enough power supply voltage.

D. If, in Step C above, the voltage is less than 13 Vdc, disconnect the power supply and signal wires to the unit. Short the wires that were removed from the power supply (+) and (-) terminals.

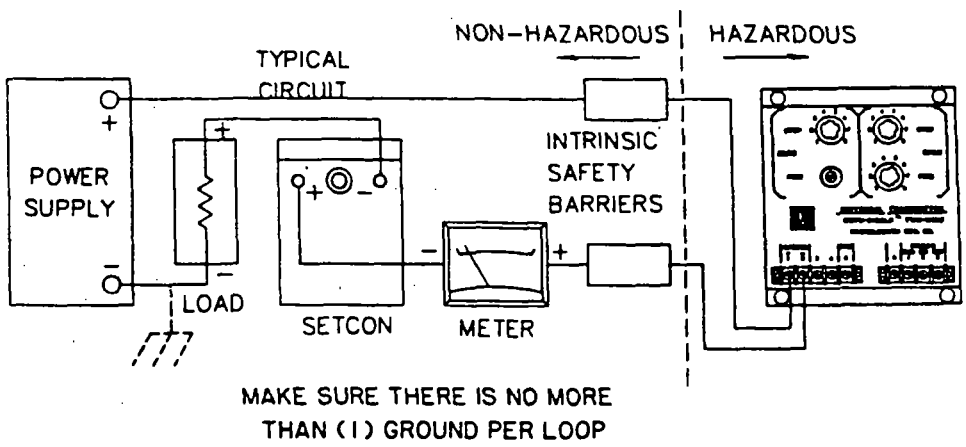

Figure 6-4
Loop Check

E. Measure the resistance between the two wires that were just removed from Terminals 1 and 2 of the electronic unit. The graph below will tell you when the resistance is too large. See Figure 6-5.

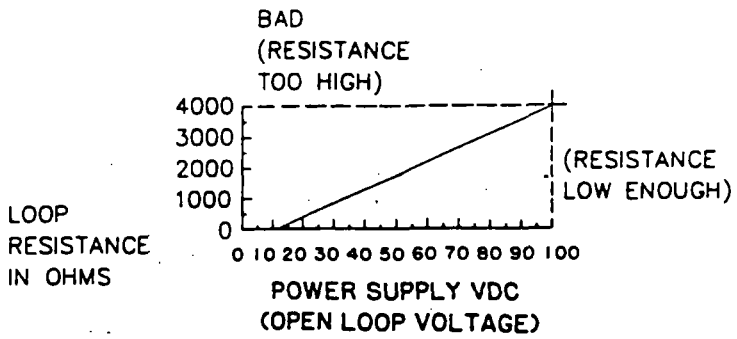

Figure 6-5
Loop Resistance

6.4 Checking the Power Supply

A. With 20 mA (100%) indicated on the flowmeter, measure the line voltage across power supply terminals 1 and 2. See Figure 6-6. The voltage should be between 95 and 135 Vac.

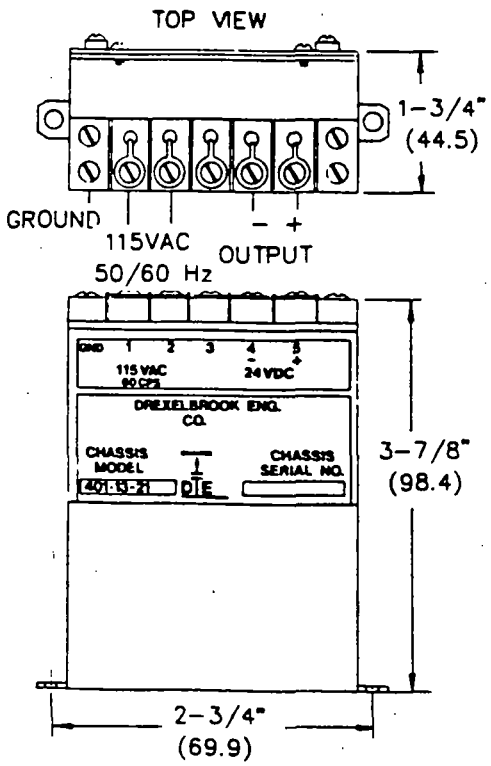

Figure 6-6
Power Supply Connections

B. Measure the voltage at terminals 4 (-) and 5 (+). The voltage should be 24 ± 3 Vdc for power supply model 401-13-21 and 45 ± Vdc for model 401-13-31.

6.5 Checking the Flush Sensing Element

6.5.1 Operational Check

A. Remove the sensing element from the mounting track and lay the sensing element down flat with the back facing down.

B. Disconnect the cable at the electronic unit terminals 7, 8 and 9.

C. With the Step Span control in position #1 and the Fine Span control fully clockwise (CW), adjust the Fine Zero control for an output of 0% (4mA).

D. Reconnect the cable to terminals 7, 8 and 9 of the electronic unit. The flowmeter reading should stay at 0% ± 30%.

E. Pick up the sensor and hold it at t ground terminal with one har. Grab the sensor with the other hand, placing the thumb in the center of the sensor, at approximately the 50% flow point. The flowmeter output should increase 30% or more. **Note:** placing the hand on the back side of the sensing element should have little effect.

F. If the output in Step E does not increase 30% or more, consult factory.

6.5.2 Checking for Defective Insulation

A. With the sensing element out of the mounting track, disconnect the cable from the electronic unit. Use an analog ohmmeter to measure the resistance between the sensing element terminals. See Figure 6-7.

a. Resistance, center wire to shield _____
b. Resistance, shield to ground _____
c. Resistance, center wire ground _____

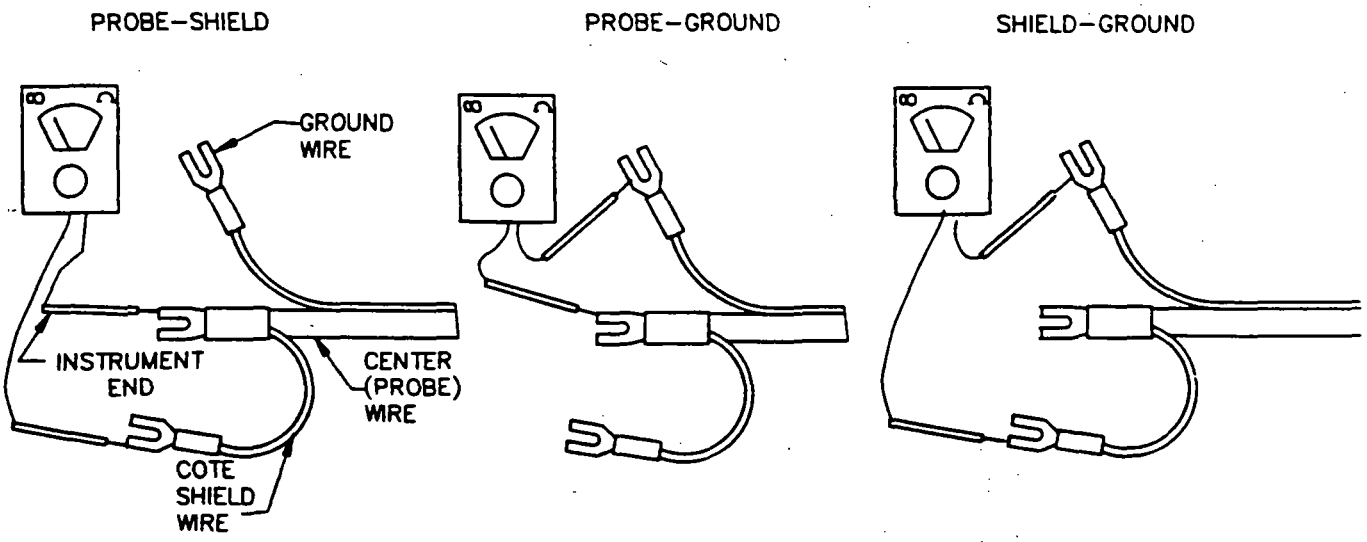

Figure 6-7
Checking the Sensing Element For Defective Insulation

B. With the sensing element in air and no coating, the resistance measured should be infinite in all three cases. Resistances less than one megohm may indicate a defect in the insulation.

C. With the sensing element, including ground connection, completely immersed in a bucket of water containing one tablespoon salt per gallon, minimum resistance readings should still be greater than one megohm. Resistance less than one megohm may indicate defect in insulation. Consult factory.

6.6 Checking the Extension Cable. See Figure 6-8

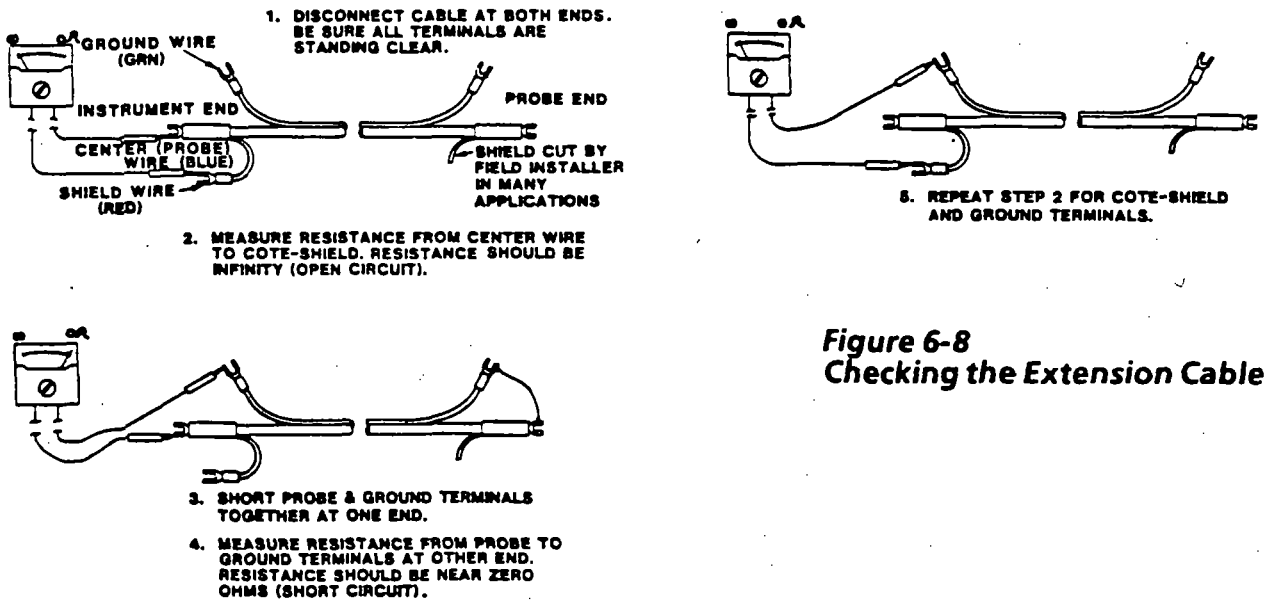

Figure 6-8
Checking the Extension Cable

6.7 Checking the Integrator/Totalizer

A. Adjust the electronic unit controls to produce an output current of 4 mA (0%). See Section 6.2.1.

B. Note and record the setting on the pulse rate adjustment. Now turn the adjustment to the full clockwise position (11-1). With the transmitter output at 0% (4 mA), the totalizer should not index. Wait 60 seconds to make sure it does not index.

C. Adjust the electronic unit to produce a current output of 20 mA (100%). The totalizer should now index one number approximately every three seconds. If so, the integrator and totalizer are working properly and you can proceed to Step F. If not, continue with Step D.

D. Check the LED on the integrator. See Figure 6-9. If the LED is flashing approx. every 3 sec., the totalizer is defective and should be replaced.

E. If the LED on the integrator is not flashing, the integrator may be at fault. Check the voltage across the integrator terminals 4 and 6 with a DC voltmeter. See Figure 6-9 The input voltage should be 45 ± 5 Vdc. the input voltage is correct, return the integrator to the factory for repair. If the input voltage is not correct, check the power supply. See Section 6.4.

F. Return the pulse rate adjustment to the original number recorded above.

Note: If the meter is reading the correct percentage of flow, but the totalizer seems incorrect in relation to the input water meter, the integrator may be set for the wrong flow rate. Recalibrate integrator per Sec. 5.4.

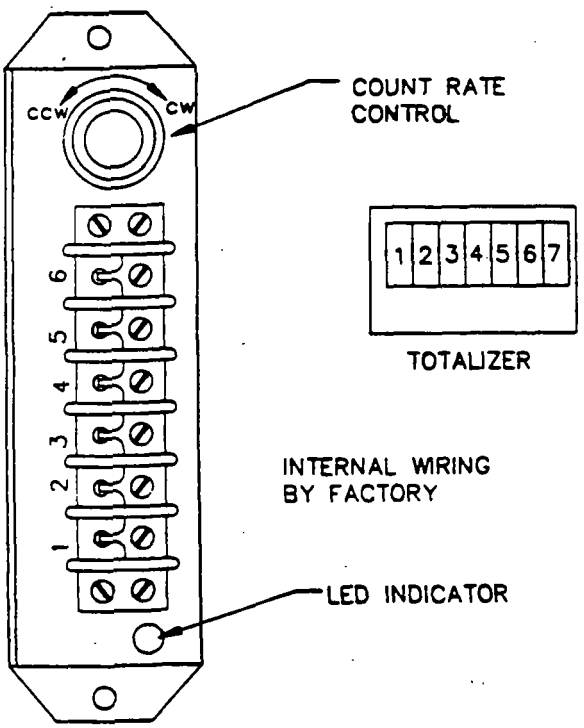

Figure 6-9
Integrator Totalizer

6.8 Checking the Sampler/Activator

A. Measure the voltage between terminals 1 and 2. See Figure 6-10. The voltage should be between 11.5 and 50 Vdc with terminal 1 positive.

B. Check the voltage pulse from the integrator on terminals 3 and 4. The pulse should measure between 12 and 24 Vdc with a minimum duration of 60 milliseconds.

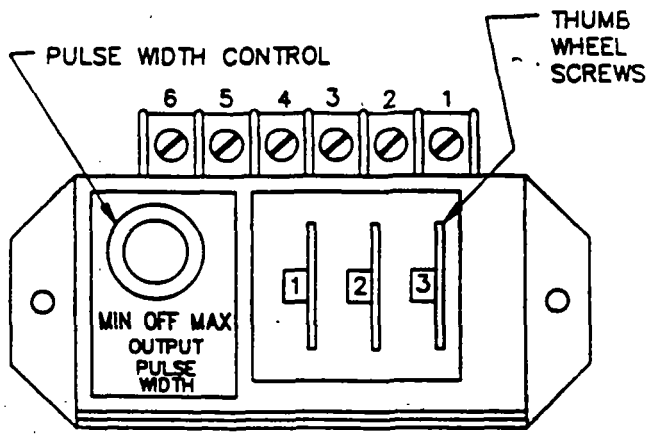

Figure 6-10
Sampler Activator

C. Turn the output pulse width control to the full clockwise (CW) position.

D. Turn the thumbwheel switch to 001. Make sure the multiplier jumper is in the XI position on the sampler/activator P.C. board. See Section 5.5.

E. Each time the integrator sends a pulse to the sampler activator, the relay contact on terminals 5 and 6 of the sampler activator

should close for approximately 2 seconds. If not, the unit should be returned to the factory for repair.

Note: The integrator should be set to provide a pulse to the sampler activator once every 45 seconds or longer. This allows the sampler activator to reset between pulses.

6.9 Checking the Optional Strip Chart Recorder

A. Use procedure 6.3 to produce a current of 20 mA. Connect a voltmeter or digital voltmeter across the recorder terminals 4 and 5. See Figure 6-11. The voltmeter should read .2 Vdc, and the recorder should read 100%.

B. If the recorder *does* not read 100% with .2 Vdc across terminals 4 *and* 5, it should be returned to the factory for repair.

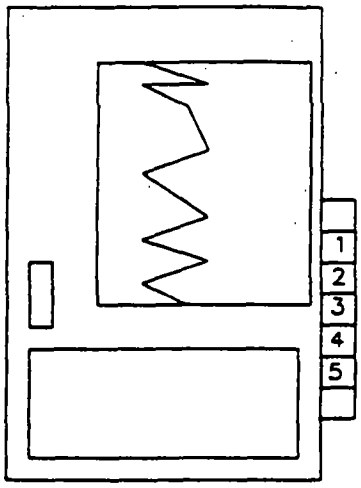

6-11
Strip Chart Recorder

7.0 Factory and Field Service Assistance

7.1Telephone Assistance

If you are having difficulty with your Drexelbrook equipment, and attempts to locate the problems have failed, notify your local Drexelbrook representative, or call the factory direct and ask for the service department. Drexelbrook Engineering Company is located at 205 Keith Valley Road, Horsham, Pa. 19044. The telephone number is (215) 674-1234. To help us solve your problem quickly, please have as much of the following information as possible when you call:

Instrument Model#_____

_____

Probe Model#_____

_____

P.O. #_____

Date_____

Cable Length_____

Application_____

_____

Material being measured_____

_____

Temperature _____

Pressure _____

Agitation _____

Brief description of the problem _____

_____

_____

Checkout procedures that failed _____

_____

_____

_____

7.2 Equipment Return

Do not return equipment without first contacting the factory for a return authorization number. Any equipment being returned must include the following information:

Reason for return_____

_____

Return Authorization# _____

_____

Original P.O.#_____

Drexelbrook order#_____

Your company contact _____

"Ship To" address _____

To keep the paperwork in order, please include a purchase order with returned equipment even though it may be coming back for warranty repair. You will not be charged if covered under warranty. Please return your equipment with freight charges prepaid. We regret that we cannot accept collect shipments.

Drexelbrook usually has a stock of reconditioned exchange units available for faster turnaround of a repair order. If you prefer your own uni repaired rather than exchanged, please mark clearly on the return unit, "Do Not Exchange".

Spare instruments are generally in factory stock. If the application is critical, a spare chassis should be kept on hand.

7.3 Field Service

Trained field servicemen are available on a time-plus-expense basis to assist in start-ups, diagnosing difficult application problems, or in-plant training of personnel.

Contact the service department for further details.

7.4 Customer Training

Periodically, Drexelbrook instrument training seminars for customers are held at the factory. These sessions are guided by Drexelbrook engineers and specialists, and provide detailed information on all aspects of level measurement including theory and instrument operation. For more information about these valuable workshops, write to Drexelbrook Engineering Attention: Communi-cations/Training Group; o call direct (215) 674-1234.

Table 1

1 Inch to 24 Inch PARSHALL Flumes

Flow in GPM vs. Head Height in Inches

Flow	1"	2"	3"	6"	9"	12"	18"	24"
10	2.1	1.4	1.0	.7	.5	.4	.3	.3
20	3.2	2.1	1.6	1.1	.8	.6	.5	.4
30	4.2	2.8	2.1	1.4	1.0	.8	.6	.5
40	5.1	3.3	2.5	1.6	1.2	1.0	.8	.7
50	5.9	3.8	2.9	1.9	1.4	1.1	.9	.8
65	6.9	4.5	3.5	2.2	1.6	1.4	1.1	.9
80	7.9	5.2	4.0	2.6	1.9	1.6	1.2	1.0
95	8.9	5.8	4.4	2.8	2.1	1.7	1.4	1.2
110	9.8	6.4	4.9	3.1	2.3	1.9	1.5	1.3
125	10.6	6.9	5.3	3.4	2.5	2.1	1.6	1.4
140	11.4	7.4	5.7	3.6	2.7	2.2	1.8	1.5
155	12.2	7.9	6.1	3.9	2.9	2.4	1.9	1.6
170	12.9	8.4	6.5	4.1	3.1	2.5	2.0	1.7
185	13.6	8.9	6.8	4.3	3.2	2.7	2.1	1.8
200	14.4	9.4	7.2	4.6	3.4	2.8	2.2	1.9
220	15.3	9.9	7.6	4.8	3.6	3.0	2.4	2.0
240	16.1	10.5	8.1	5.1	3.8	3.2	2.5	2.1
260	17.0	11.1	8.5	5.4	4.0	3.4	2.6	2.2
280	17.8	11.6	8.9	5.6	4.2	3.5	2.8	2.3
300	18.6	12.2	9.3	5.9	4.4	3.7	2.9	2.4
320	19.4	12.7	9.7	6.1	4.6	3.9	3.0	2.5
340	20.2	13.2	10.1	6.4	4.8	4.0	3.1	2.6
360		13.7	10.5	6.6	5.0	4.2	3.2	2.7
380		14.2	10.9	6.8	5.2	4.3	3.4	2.8
400		14.6	11.3	7.1	5.3	4.5	3.5	2.9
420		15.1	11.6	7.3	5.5	4.6	3.6	3.0
440		15.6	12.0	7.5	5.7	4.8	3.7	3.1
460		16.0	12.3	7.7	5.9	4.9	3.8	3.2
480		16.5	12.7	7.9	6.0	5.0	3.9	3.3
500		16.9	13.0	8.1	6.2	5.2	4.0	3.4
525		17.4	13.4	8.4	6.4	5.3	4.1	3.5
550		18.0	13.8	8.6	6.6	5.5	4.3	3.6
575		18.5	14.2	8.9	6.8	5.7	4.4	3.7
600		19.0	14.6	9.1	7.0	5.8	4.5	3.8
625		19.5	15.0	9.4	7.2	6.0	4.6	3.9
650		20.0	15.4	9.6	7.3	6.2	4.8	4.0
675		20.5	15.8	9.8	7.5	6.3	4.9	4.1
700		21.0	16.2	10.1	7.7	6.5	5.0	4.2
725		21.5	16.5	10.3	7.9	6.6	5.1	4.3
750		21.9	16.9	10.5	8.1	6.8	5.2	4.4
800		22.9	17.6	11.0	8.4	7.1	5.5	4.6
850		23.8	18.3	11.4	8.7	7.3	5.7	4.7
900		24.7	19.0	11.8	9.1	7.6	5.9	4.9
950			19.7	12.2	9.4	7.9	6.1	5.1
1000			20.3	12.6	9.7	8.2	6.3	5.3
1050			21.0	13.0	10.0	8.4	6.5	5.4
1100			21.6	13.4	10.3	8.7	6.7	5.6
1150			22.3	13.8	10.7	9.0	6.9	5.8
1200			22.9	14.2	11.0	9.2	7.1	5.9
1250			23.5	14.5	11.3	9.5	7.3	6.1
1300			24.1	14.9	11.5	9.7	7.5	6.2
1350			24.7	15.3	11.8	9.9	7.7	6.4
1400			25.3	15.6	12.1	10.2	7.8	6.5
1450			25.9	16.0	12.4	10.4	8.0	6.7
1500			26.4	16.3	12.7	10.7	8.2	6.8
1550			27.0	16.7	13.0	10.9	8.4	7.0
1600			27.6	17.0	13.2	11.1	8.6	7.1
1650			28.1	17.3	13.5	11.4	8.7	7.3
1700			28.7	17.7	13.8	11.6	8.9	7.4
1750			29.2	18.0	14.0	11.8	9.1	7.5

1 Inch to 24 Inch PARSHALL Flumes

Flow in GPM vs. Head Height in Inches

Flow	1"	2"	3"	6"	9"	12"	18"	24"
1800			29.7	18.3	14.3	12.0	9.2	7.7
1850			30.3	18.6	14.5	12.2	9.4	7.8
1900			30.8	19.0	14.8	12.5	9.6	8.0
1950			31.3	19.3	15.0	12.7	9.7	8.1
2000			31.8	19.6	15.3	12.9	9.9	8.2
2050			32.4	19.9	15.5	13.1	10.1	8.4
2100			32.9	20.2	15.8	13.3	10.2	8.5
2150			33.4	20.5	16.0	13.5	10.4	8.6
2200			33.9	20.8	16.3	13.7	10.5	8.7
2250			34.4	21.1	16.5	13.9	10.7	8.9
2300			34.9	21.4	16.8	14.1	10.8	9.0
2350			35.3	21.7	17.0	14.3	11.0	9.1
2400			35.8	22.0	17.2	14.5	11.1	9.3
2450			36.3	22.3	17.5	14.7	11.3	9.4
2500			36.8	22.5	17.7	14.9	11.4	9.5
2600				23.1	18.2	15.3	11.7	9.7
2700				23.7	18.6	15.7	12.0	10.0
2800				24.2	19.1	16.1	12.3	10.2
2900				24.8	19.5	16.4	12.6	10.5
3000				25.3	19.9	16.8	12.9	10.7
3100				25.8	20.4	17.2	13.2	10.9
3200				26.4	20.8	17.5	13.4	11.1
3300				26.9	21.2	17.9	13.7	11.4
3400				27.4	21.6	18.3	14.0	11.6
3500				27.9	22.1	18.6	14.2	11.8
3600				28.4	22.5	19.0	14.5	12.0
3700				28.9	22.9	19.3	14.8	12.2
3800				29.4	23.3	19.6	15.0	12.4
3900				29.9	23.7	20.0	15.3	12.7
4000				30.4	24.1	20.3	15.5	12.9
4100				30.8	24.5	20.6	15.8	13.1
4200				31.3	24.8	21.0	16.0	13.3
4300				31.8	25.2	21.3	16.3	13.5
4400				32.2	25.6	21.6	16.5	13.7
4500				32.7	26.0	21.9	16.8	13.9
4600				33.2	26.4	22.3	17.0	14.1
4700				33.6	26.7	22.6	17.2	14.3
4800				34.1	27.1	22.9	17.5	14.5
4900				34.5	27.5	23.2	17.7	14.7
5000				35.0	27.8	23.5	18.0	14.9
5100				35.4	28.2	23.8	18.2	15.0
5200				35.8	28.6	24.1	18.4	15.2
5300				36.3	28.9	24.4	18.6	15.4
5400				36.7	29.3	24.7	18.9	15.6
5500					29.6	25.0	19.1	15.8
5600					30.0	25.3	19.3	16.0
5700					30.3	25.6	19.5	16.2
5800					30.7	25.9	19.8	16.3
5900					31.0	26.2	20.0	16.5
6000					31.4	26.5	20.2	16.7
6100					31.7	26.8	20.4	16.9
6200					32.0	27.1	20.6	17.1
6300					32.4	27.4	20.9	17.2
6400					32.7	27.7	21.1	17.4
6500					33.1	27.9	21.3	17.6
6600					33.4	28.2	21.5	17.8
6700					33.7	28.5	21.7	17.9
6800					34.0	28.8	21.9	18.1
6900					34.4	29.1	22.1	18.3
7000					34.7	29.3	22.3	18.5

Table 1

1 Inch to 24 Inch PARSHALL Flumes

Flow in GPM vs. Head Height in Inches

Flow	1"	2"	3"	6"	9"	12"	18"	24"
7200					35.3	29.9	22.8	18.8
7400					36.0	30.4	23.2	19.1
7600					36.6	31.0	23.6	19.5
7800						31.5	24.0	19.8
8000						32.0	24.4	20.1
8200						32.5	24.8	20.4
8400						33.1	25.2	20.8
8600						33.6	25.5	21.1
8800						34.1	25.9	21.4
9000						34.6	26.3	21.7
9200						35.1	26.7	22.0
9400						35.6	27.1	22.3
9600						36.1	27.4	22.6
9800						36.6	27.8	22.9
10000							28.2	23.2
10200							28.5	23.5
10400							28.9	23.8
10600							29.3	24.1
10800							29.6	24.4
11000							30.0	24.7
11200							30.3	25.0
11400							30.7	25.3
11600							31.0	25.6
11800							31.4	25.9
12000							31.7	26.1
12200							32.1	26.4
12400							32.4	26.7
12600							32.7	27.0
12800							33.1	27.2
13000							33.4	27.5
13200							33.7	27.8
13400							34.1	28.1
13600							34.4	28.3
13800							34.7	28.6
14000							35.1	28.9
14200							35.4	29.1
14400							35.7	29.4
14600							36.0	29.7
14800							36.4	29.9
15000							36.7	30.2
15500								30.8
16000								31.5
16500								32.1
17000								32.7
17500								33.3
18000								33.9
18500								34.6
19000								35.2
19500								35.7
20000								36.3
20500								

Table 2

3 ft to 12 ft PARSHALL Flumes

Flow in GPM vs. Head Height in Inches

Flow	3'	4'	5'	6'	7'	8'	10'	12'
100	.9	.8	.7	.6	.6	.5	.5	.4
200	1.5	1.2	1.1	1.0	.9	.8	.7	.7
300	1.9	1.6	1.4	1.3	1.2	1.1	.9	.8
400	2.3	1.9	1.7	1.5	1.4	1.3	1.1	1.0
500	2.6	2.2	1.9	1.8	1.6	1.5	1.3	1.2
600	3.0	2.5	2.2	2.0	1.8	1.7	1.4	1.3
700	3.3	2.7	2.4	2.2	2.0	1.8	1.6	1.4
800	3.6	3.0	2.6	2.4	2.1	2.0	1.7	1.6
900	3.8	3.2	2.8	2.5	2.3	2.1	1.9	1.7
1000	4.1	3.4	3.0	2.7	2.5	2.3	2.0	1.8
1100	4.4	3.7	3.2	2.9	2.6	2.4	2.1	1.9
1200	4.6	3.9	3.4	3.0	2.8	2.6	2.2	2.0
1300	4.8	4.1	3.6	3.2	2.9	2.7	2.3	2.1
1400	5.1	4.3	3.7	3.3	3.0	2.8	2.5	2.2
1500	5.3	4.4	3.9	3.5	3.2	2.9	2.6	2.3
1600	5.5	4.6	4.0	3.6	3.3	3.1	2.7	2.4
1700	5.7	4.8	4.2	3.8	3.4	3.2	2.8	2.5
1800	6.0	5.0	4.4	3.9	3.6	3.3	2.9	2.6
1900	6.2	5.2	4.5	4.0	3.7	3.4	3.0	2.7
2000	6.4	5.3	4.7	4.2	3.8	3.5	3.1	2.8
2200	6.8	5.7	4.9	4.4	4.0	3.7	3.3	2.9
2400	7.2	6.0	5.2	4.7	4.3	3.9	3.4	3.1
2600	7.5	6.3	5.5	4.9	4.5	4.1	3.6	3.3
2800	7.9	6.6	5.8	5.2	4.7	4.3	3.8	3.4
3000	8.3	6.9	6.0	5.4	4.9	4.5	4.0	3.6
3200	8.6	7.2	6.3	5.6	5.1	4.7	4.1	3.7
3400	8.9	7.5	6.5	5.8	5.3	4.9	4.3	3.8
3600	9.3	7.7	6.7	6.0	5.5	5.1	4.4	4.0
3800	9.6	8.0	7.0	6.2	5.7	5.2	4.6	4.1
4000	9.9	8.3	7.2	6.4	5.9	5.4	4.7	4.3
4200	10.2	8.5	7.4	6.6	6.1	5.6	4.9	4.4
4400	10.5	8.8	7.7	6.8	6.2	5.7	5.0	4.5
4600	10.8	9.0	7.9	7.0	6.4	5.9	5.2	4.6
4800	11.1	9.3	8.1	7.2	6.6	6.1	5.3	4.8
5000	11.4	9.5	8.3	7.4	6.7	6.2	5.4	4.9
5500	12.2	10.1	8.8	7.9	7.2	6.6	5.8	5.2
6000	12.9	10.7	9.3	8.3	7.6	7.0	6.1	5.5
6500	13.5	11.3	9.8	8.7	7.9	7.3	6.4	5.8
7000	14.2	11.8	10.3	9.2	8.3	7.7	6.7	6.0
7500	14.8	12.3	10.7	9.6	8.7	8.0	7.0	6.3
8000	15.4	12.9	11.2	10.0	9.1	8.3	7.3	6.6
8500	16.1	13.4	11.6	10.3	9.4	8.7	7.6	6.8
9000	16.7	13.8	12.0	10.7	9.7	9.0	7.9	7.1
9500	17.2	14.3	12.4	11.1	10.1	9.3	8.1	7.3
10000	17.8	14.8	12.8	11.5	10.4	9.6	8.4	7.5
10500	18.4	15.3	13.2	11.8	10.7	9.9	8.7	7.8
11000	18.9	15.7	13.6	12.2	11.0	10.2	8.9	8.0
11500	19.5	16.2	14.0	12.5	11.4	10.4	9.2	8.2
12000	20.0	16.6	14.4	12.8	11.7	10.7	9.4	8.5
12500	20.5	17.1	14.8	13.2	12.0	11.0	9.7	8.7
13000	21.1	17.5	15.2	13.5	12.3	11.3	9.9	8.9
13500	21.6	17.9	15.5	13.8	12.5	11.5	10.1	9.1
14000	22.1	18.3	15.9	14.1	12.8	11.8	10.4	9.3
14500	22.6	18.7	16.2	14.5	13.1	12.1	10.6	9.5
15000	23.1	19.1	16.6	14.8	13.4	12.3	10.8	9.7
15500	23.6	19.5	16.9	15.1	13.7	12.6	11.0	9.9
16000	24.0	19.9	17.3	15.4	14.0	12.8	11.3	10.1
16500	24.5	20.3	17.6	15.7	14.2	13.1	11.5	10.3
17000	25.0	20.7	17.9	16.0	14.5	13.3	11.7	10.5
17500	25.5	21.1	18.3	16.3	14.8	13.6	11.9	10.7

3 ft to 12 ft PARSHALL Flumes

Flow in GPM vs. Head Height in Inches

Flow	3'	4'	5'	6'	7'	8'	10'	12'
18000	25.9	21.5	18.6	16.6	15.0	13.8	12.1	10.9
18500	26.4	21.9	18.9	16.8	15.3	14.0	12.3	11.1
19000	26.8	22.2	19.3	17.1	15.5	14.3	12.5	11.3
19500	27.3	22.6	19.6	17.4	15.8	14.5	12.8	11.5
20000	27.7	23.0	19.9	17.7	16.0	14.7	13.0	11.6
20500	28.2	23.3	20.2	18.0	16.3	15.0	13.2	11.8
21000	28.6	23.7	20.5	18.2	16.5	15.2	13.4	12.0
21500	29.0	24.0	20.8	18.5	16.8	15.4	13.6	12.2
22000	29.5	24.4	21.1	18.8	17.0	15.6	13.8	12.4
22500	29.9	24.7	21.4	19.0	17.3	15.9	13.9	12.5
23000	30.3	25.1	21.7	19.3	17.5	16.1	14.1	12.7
23500	30.7	25.4	22.0	19.6	17.7	16.3	14.3	12.9
24000	31.2	25.8	22.3	19.8	18.0	16.5	14.5	13.0
24500	31.6	26.1	22.6	20.1	18.2	16.7	14.7	13.2
25000	32.0	26.5	22.9	20.3	18.4	16.9	14.9	13.4
25500	32.4	26.8	23.2	20.6	18.7	17.2	15.1	13.5
26000	32.8	27.1	23.5	20.8	18.9	17.4	15.3	13.7
26500	33.2	27.5	23.7	21.1	19.1	17.6	15.4	13.9
27000	33.6	27.8	24.0	21.3	19.3	17.8	15.6	14.0
27500	34.0	28.1	24.3	21.6	19.6	18.0	15.8	14.2
28000	34.4	28.4	24.6	21.8	19.8	18.2	16.0	14.4
28500	34.8	28.7	24.9	22.1	20.0	18.4	16.2	14.5
29000	35.2	29.1	25.1	22.3	20.2	18.6	16.3	14.7
29500	35.5	29.4	25.4	22.6	20.4	18.8	16.5	14.8
30000	35.9	29.7	25.7	22.8	20.7	19.0	16.7	15.0
31000	36.7	30.3	26.2	23.3	21.1	19.4	17.0	15.3
32000		30.9	26.7	23.7	21.5	19.8	17.4	15.6
33000		31.5	27.3	24.2	21.9	20.1	17.7	15.9
34000		32.1	27.8	24.7	22.3	20.5	18.0	16.2
35000		32.7	28.3	25.1	22.8	20.9	18.4	16.5
36000		33.3	28.8	25.6	23.2	21.3	18.7	16.8
37000		33.9	29.3	26.0	23.6	21.6	19.0	17.1
38000		34.5	29.8	26.4	24.0	22.0	19.3	17.4
39000		35.1	30.3	26.9	24.3	22.3	19.7	17.7
40000		35.6	30.8	27.3	24.7	22.7	20.0	18.0
41000		36.2	31.3	27.7	25.1	23.1	20.3	18.2
42000		36.8	31.7	28.2	25.5	23.4	20.6	18.5
43000			32.2	28.6	25.9	23.7	20.9	18.8
44000			32.7	29.0	26.2	24.1	21.2	19.1
45000			33.1	29.4	26.6	24.4	21.5	19.3
46000			33.6	29.8	27.0	24.8	21.8	19.6
47000			34.1	30.2	27.4	25.1	22.1	19.9
48000			34.5	30.6	27.7	25.4	22.4	20.1
49000			35.0	31.0	28.1	25.8	22.7	20.4
50000			35.4	31.4	28.4	26.1	23.0	20.6
51000			35.9	31.8	28.8	26.4	23.3	20.9
52000			36.3	32.2	29.1	26.7	23.5	21.2
53000			36.7	32.6	29.5	27.0	23.8	21.4
54000				33.0	29.8	27.4	24.1	21.7
55000				33.3	30.2	27.7	24.4	21.9
56000				33.7	30.5	28.0	24.7	22.2
57000				34.1	30.9	28.3	24.9	22.4
58000				34.5	31.2	28.6	25.2	22.6
59000				34.8	31.5	28.9	25.5	22.9
60000				35.2	31.9	29.2	25.7	23.1
61000				35.6	32.2	29.5	26.0	23.4
62000				35.9	32.5	29.8	26.3	23.6
63000				36.3	32.8	30.1	26.5	23.8
64000				36.7	33.2	30.4	26.8	24.1
65000					33.5	30.7	27.1	24.3

Table 2

3 ft to 12 ft PARSHALL Flumes

Flow in GPM vs. Head Height in Inches

Flow	3'	4'	5'	6'	7'	8'	10'	12'
66000					33.8	31.0	27.3	24.5
67000					34.1	31.3	27.6	24.8
68000					34.5	31.6	27.8	25.0
69000					34.8	31.9	28.1	25.2
70000					35.1	32.2	28.3	25.5
72000					35.7	32.7	28.8	25.9
74000					36.3	33.3	29.3	26.4
76000						33.9	29.8	26.8
78000						34.4	30.3	27.3
80000						35.0	30.8	27.7
82000						35.5	31.3	28.1
84000						36.0	31.8	28.5
86000							32.2	29.0
88000							32.7	29.4
90000							33.2	29.8
92000							33.6	30.2
94000							34.1	30.6
96000							34.5	31.0
98000							35.0	31.4
100000							35.4	31.8
105000							36.5	32.8
110000							37.6	33.8
115000							38.7	34.7
120000							39.7	35.7
125000							40.7	36.6
130000							41.7	37.5
135000							42.7	38.4
140000							43.7	39.3
145000							44.7	40.1
150000							45.6	41.0
155000							46.6	41.9
160000							47.5	42.7
165000							48.4	43.5
170000								44.3
175000								45.2
180000								46.0
185000								46.8
190000								47.5
195000								48.3
200000								49.1
205000								49.8
210000								50.6
215000								51.4
220000								52.1
225000								52.8
230000								53.6
235000								54.3
240000								55.0
245000								55.7
250000								56.4
255000								57.1
260000								57.8
265000								58.5
270000								59.2
275000								59.9

Table 3

4 Inch to 21 Inch PALMER-BOWLUS Flumes

Flow in GPM vs. Head Height in Inches

Flow	4"	6"	8"	10"	12"	15"	18"	21"
5	.8	.7	.7	.6	.6	.6	.5	.5
10	1.2	1.1	1.0	.9	.9	.8	.7	.7
15	1.5	1.3	1.2	1.1	1.1	1.0	.9	.9
20	1.8	1.6	1.4	1.3	1.3	1.1	1.1	1.0
25	2.0	1.7	1.6	1.5	1.4	1.3	1.2	1.2
30	2.2	1.9	1.8	1.6	1.5	1.4	1.3	1.3
35	2.4	2.1	1.9	1.7	1.7	1.5	1.4	1.4
40	2.6	2.2	2.0	1.9	1.8	1.7	1.5	1.5
45	2.8	2.4	2.2	2.0	1.9	1.8	1.6	1.6
50	3.0	2.5	2.3	2.1	2.0	1.9	1.7	1.7
60	3.3	2.8	2.5	2.3	2.2	2.0	1.9	1.8
70	3.6	3.0	2.8	2.5	2.4	2.2	2.1	2.0
80	3.8	3.2	3.0	2.7	2.6	2.4	2.2	2.1
90		3.4	3.1	2.9	2.8	2.5	2.4	2.3
100		3.6	3.3	3.1	2.9	2.7	2.5	2.4
115		3.9	3.6	3.3	3.1	2.9	2.7	2.6
130		4.2	3.8	3.5	3.4	3.1	2.9	2.8
145		4.4	4.1	3.7	3.6	3.3	3.0	2.9
160		4.7	4.3	3.9	3.7	3.4	3.2	3.1
175		4.9	4.5	4.1	3.9	3.6	3.4	3.2
190		5.1	4.7	4.3	4.1	3.8	3.5	3.4
205		5.3	4.9	4.5	4.3	3.9	3.7	3.5
220		5.5	5.1	4.7	4.4	4.1	3.8	3.6
235		5.7	5.2	4.9	4.6	4.2	3.9	3.8
250		5.9	5.4	5.0	4.7	4.4	4.1	3.9
275			5.7	5.3	5.0	4.6	4.3	4.1
300			6.0	5.5	5.2	4.8	4.5	4.3
325			6.2	5.8	5.4	5.0	4.7	4.5
350			6.5	6.0	5.7	5.2	4.9	4.7
375			6.7	6.2	5.9	5.4	5.1	4.8
400			7.0	6.5	6.1	5.6	5.2	5.0
425			7.2	6.7	6.3	5.8	5.4	5.2
450			7.4	6.9	6.5	5.9	5.6	5.3
475			7.6	7.1	6.6	6.1	5.7	5.5
500				7.3	6.8	6.3	5.9	5.6
525				7.5	7.0	6.5	6.1	5.8
550				7.7	7.2	6.6	6.2	5.9
575				7.9	7.3	6.8	6.4	6.1
600				8.0	7.5	6.9	6.5	6.2
625				8.2	7.7	7.1	6.7	6.3
650				8.4	7.8	7.2	6.8	6.5
675				8.6	8.0	7.4	6.9	6.6
700				8.7	8.1	7.5	7.1	6.7
725				8.9	8.3	7.7	7.2	6.9
750				9.1	8.4	7.8	7.3	7.0
775				9.2	8.6	7.9	7.5	7.1
800				9.4	8.7	8.1	7.6	7.2
825				9.5	8.9	8.2	7.7	7.4
850					9.0	8.3	7.8	7.5
875					9.2	8.5	8.0	7.6
900					9.3	8.6	8.1	7.7
925					9.4	8.7	8.2	7.8
950					9.6	8.8	8.3	7.9
975					9.7	9.0	8.4	8.0
1000					9.8	9.1	8.6	8.1
1050					10.1	9.3	8.8	8.4
1100					10.3	9.5	9.0	8.6
1150					10.6	9.8	9.2	8.8
1200					10.8	10.0	9.4	9.0
1250					11.1	10.2	9.6	9.2

4 Inch to 21 Inch PALMER-BOWLUS Flumes

Flow in GPM vs. Head Height in Inches

Flow	4"	6"	8"	10"	12"	15"	18"	21"
1300					11.3	10.4	9.8	9.4
1350					11.5	10.6	10.1	9.5
1400						10.8	10.2	9.7
1450						11.0	10.4	9.9
1500						11.2	10.6	10.1
1550						11.4	10.8	10.3
1600						11.6	11.0	10.4
1650						11.8	11.2	10.6
1700						12.0	11.4	10.8
1750						12.2	11.5	11.0
1800						12.4	11.7	11.1
1850						12.6	11.9	11.3
1900						12.7	12.1	11.4
1950						12.9	12.2	11.6
2000						13.1	12.4	11.8
2100						13.4	12.7	12.1
2200						13.8	13.1	12.4
2300						14.1	13.4	12.7
2400						14.4	13.7	12.9
2500							14.0	13.2
2600							14.3	13.5
2700							14.6	13.8
2800							14.9	14.0
2900							15.1	14.3
3000							15.4	14.6
3100							15.7	14.8
3200							16.0	15.1
3300							16.2	15.3
3400							16.5	15.6
3500							16.7	15.8
3600							17.0	16.0
3700							17.2	16.3
3800								16.5
3900								16.7
4000								17.0
4100								17.2
4200								17.4
4300								17.6
4400								17.8
4500								18.1
4600								18.3
4700								18.5
4800								18.7
4900								18.9
5000								19.1
5100								19.3
5200								19.5
5300								19.7
5400								19.9

Table 4

24 inch to 72 inch PALMER-BOWLUS Flumes

Flow in GPM vs. Head Height in Inches

Flow	24"	27"	30"	36"	42"	48"	60"	72"
50	1.6	1.6	1.5	1.6	1.4	1.2	1.2	1.1
100	2.3	2.2	2.1	2.2	2.0	1.7	1.7	1.6
150	2.9	2.8	2.7	2.7	2.4	2.2	2.1	2.0
200	3.3	3.2	3.1	3.2	2.8	2.5	2.5	2.3
250	3.8	3.6	3.5	3.6	3.2	2.8	2.8	2.6
300	4.1	4.0	3.8	3.9	3.5	3.1	3.1	2.9
350	4.5	4.3	4.2	4.2	3.8	3.4	3.3	3.1
400	4.8	4.7	4.5	4.5	4.1	3.7	3.6	3.4
450	5.1	5.0	4.8	4.8	4.3	3.9	3.8	3.6
500	5.4	5.2	5.0	5.0	4.6	4.1	4.0	3.8
550	5.7	5.5	5.3	5.3	4.8	4.3	4.2	4.0
600	6.0	5.8	5.5	5.5	5.0	4.6	4.4	4.2
650	6.2	6.0	5.8	5.8	5.3	4.8	4.6	4.4
700	6.5	6.3	6.0	6.0	5.5	4.9	4.8	4.5
750	6.7	6.5	6.2	6.2	5.7	5.1	5.0	4.7
800	6.9	6.7	6.4	6.4	5.9	5.3	5.2	4.9
850	7.2	6.9	6.7	6.6	6.1	5.5	5.3	5.0
900	7.4	7.1	6.9	6.8	6.2	5.7	5.5	5.2
950	7.6	7.3	7.1	7.0	6.4	5.8	5.7	5.3
1000	7.8	7.6	7.3	7.2	6.6	6.0	5.8	5.5
1100	8.2	7.9	7.6	7.5	6.9	6.3	6.1	5.8
1200	8.6	8.3	8.0	7.9	7.3	6.6	6.4	6.0
1300	9.0	8.7	8.3	8.2	7.6	6.9	6.7	6.3
1400	9.3	9.0	8.7	8.5	7.9	7.2	6.9	6.5
1500	9.7	9.3	9.0	8.8	8.2	7.5	7.2	6.8
1600	10.0	9.7	9.3	9.1	8.4	7.7	7.5	7.0
1700	10.3	10.0	9.6	9.4	8.7	8.0	7.7	7.3
1800	10.7	10.3	9.9	9.7	9.0	8.2	7.9	7.5
1900	11.0	10.6	10.2	9.9	9.2	8.5	8.2	7.7
2000	11.3	10.9	10.5	10.2	9.5	8.7	8.4	7.9
2100	11.6	11.2	10.8	10.5	9.8	9.0	8.6	8.1
2200	11.9	11.4	11.0	10.7	10.0	9.2	8.8	8.3
2300	12.1	11.7	11.3	11.0	10.2	9.4	9.0	8.5
2400	12.4	12.0	11.5	11.2	10.5	9.6	9.2	8.7
2500	12.7	12.2	11.8	11.4	10.7	9.9	9.4	8.9
2600	12.9	12.5	12.0	11.7	10.9	10.1	9.6	9.1
2700	13.2	12.7	12.3	11.9	11.1	10.3	9.8	9.3
2800	13.5	13.0	12.5	12.1	11.3	10.5	10.0	9.4
2900	13.7	13.2	12.8	12.3	11.6	10.7	10.2	9.6
3000	14.0	13.5	13.0	12.5	11.8	10.9	10.4	9.8
3100	14.2	13.7	13.2	12.7	12.0	11.1	10.6	10.0
3200	14.4	13.9	13.4	13.0	12.2	11.3	10.8	10.1
3300	14.7	14.2	13.7	13.2	12.4	11.5	10.9	10.3
3400	14.9	14.4	13.9	13.4	12.6	11.6	11.1	10.5
3500	15.1	14.6	14.1	13.6	12.8	11.8	11.3	10.6
3600	15.4	14.8	14.3	13.7	12.9	12.0	11.4	10.8
3700	15.6	15.0	14.5	13.9	13.1	12.2	11.6	10.9
3800	15.8	15.3	14.7	14.1	13.3	12.4	11.8	11.1
3900	16.0	15.5	14.9	14.3	13.5	12.5	11.9	11.3
4000	16.3	15.7	15.1	14.5	13.7	12.7	12.1	11.4
4100	16.5	15.9	15.3	14.7	13.9	12.9	12.3	11.6
4200	16.7	16.1	15.5	14.9	14.0	13.0	12.4	11.7
4300	16.9	16.3	15.7	15.0	14.2	13.2	12.6	11.8
4400	17.1	16.5	15.9	15.2	14.4	13.4	12.7	12.0
4500	17.3	16.7	16.1	15.4	14.6	13.5	12.9	12.1
4600	17.5	16.9	16.3	15.6	14.7	13.7	13.0	12.3
4700	17.7	17.1	16.5	15.7	14.9	13.9	13.2	12.4
4800	17.9	17.3	16.7	15.9	15.1	14.0	13.3	12.6
4900	18.1	17.5	16.8	16.1	15.2	14.2	13.5	12.7
5000	18.3	17.6	17.0	16.2	15.4	14.3	13.6	12.8

24 inch to 72 inch PALMER-BOWLUS Flumes

Flow in GPM vs. Head Height in Inches

Flow	24"	27"	30"	36"	42"	48"	60"	72"
5200	18.7	18.0	17.4	16.6	15.7	14.6	13.9	13.1
5400	19.1	18.4	17.7	16.9	16.0	14.9	14.2	13.4
5600	19.4	18.7	18.1	17.2	16.3	15.2	14.5	13.6
5800	19.8	19.1	18.4	17.5	16.6	15.5	14.7	13.9
6000	20.1	19.4	18.7	17.8	16.9	15.8	15.0	14.1
6200	20.5	19.8	19.1	18.1	17.2	16.1	15.3	14.4
6400	20.8	20.1	19.4	18.4	17.5	16.4	15.5	14.6
6600	21.2	20.4	19.7	18.7	17.8	16.7	15.8	14.9
6800	21.5	20.7	20.0	19.0	18.1	16.9	16.0	15.1
7000	21.9	21.1	20.3	19.3	18.4	17.2	16.3	15.3
7200	22.2	21.4	20.6	19.5	18.6	17.5	16.5	15.6
7400	22.5	21.7	20.9	19.8	18.9	17.7	16.8	15.8
7600		22.0	21.2	20.1	19.2	18.0	17.0	16.0
7800		22.3	21.5	20.4	19.5	18.2	17.2	16.2
8000		22.6	21.8	20.6	19.7	18.5	17.5	16.5
8200		22.9	22.1	20.9	20.0	18.7	17.7	16.7
8400		23.2	22.4	21.1	20.2	19.0	17.9	16.9
8600		23.5	22.7	21.4	20.5	19.2	18.1	17.1
8800		23.8	23.0	21.6	20.7	19.5	18.4	17.3
9000		24.0	23.2	21.9	21.0	19.7	18.6	17.5
9200		24.3	23.5	22.1	21.2	19.9	18.8	17.7
9400		24.6	23.8	22.4	21.5	20.2	19.0	17.9
9600		24.9	24.0	22.6	21.7	20.4	19.2	18.1
9800		25.1	24.3	22.9	21.9	20.6	19.4	18.3
10000		25.4	24.6	23.1	22.2	20.9	19.7	18.5
10500			25.2	23.7	22.7	21.4	20.2	19.0
11000			25.8	24.2	23.3	22.0	20.7	19.5
11500			26.4	24.8	23.9	22.5	21.2	19.9
12000			27.0	25.3	24.4	23.0	21.6	20.4
12500			27.6	25.9	24.9	23.5	22.1	20.8
13000			28.2	26.4	25.5	24.0	22.6	21.3
13500				26.9	26.0	24.5	23.0	21.7
14000				27.4	26.5	25.0	23.5	22.1
14500				27.9	27.0	25.5	23.9	22.5
15000				28.4	27.4	26.0	24.4	22.9
15500				28.8	27.9	26.4	24.8	23.4
16000				29.3	28.4	26.9	25.2	23.7
16500				29.8	28.9	27.4	25.6	24.1
17000				30.2	29.3	27.8	26.0	24.5
17500				30.7	29.8	28.2	26.4	24.9
18000				31.1	30.2	28.7	26.8	25.3
18500				31.6	30.6	29.1	27.2	25.6
19000				32.0	31.1	29.5	27.6	26.0
19500				32.4	31.5	29.9	28.0	26.4
20000				32.8	31.9	30.4	28.4	26.7
21000				33.7	32.8	31.2	29.1	27.4
22000					33.6	32.0	29.8	28.1
23000					34.4	32.7	30.5	28.8
24000					35.1	33.5	31.2	29.4
25000					35.9	34.3	31.9	30.1
26000					36.7	35.0	32.6	30.7
27000					37.4	35.7	33.2	31.3
28000					38.1	36.4	33.9	31.9
29000					38.8	37.1	34.5	32.5
30000					39.5	37.8	35.1	33.1
31000						38.5	35.7	33.7
32000						39.2	36.4	34.3
33000						39.8	36.9	34.8
34000						40.5	37.5	35.4
35000						41.1	38.1	35.9

Table 4

24 Inch to 72 Inch PALMER-BOWLUS Flumes

Flow in GPM vs. Head Height in Inches

Flow	24"	27"	30"	36"	42"	48"	60"	72"
36000						41.7	38.7	34.5
37000						42.4	39.3	37.0
38000						43.0	39.8	37.5
39000						43.6	40.4	38.0
40000						44.2	40.9	38.6
41000						44.8	41.4	39.1
42000							42.0	39.6
43000							42.5	40.1
44000							43.0	40.6
45000							43.5	41.0
46000							44.0	41.5
47000							44.5	42.0
48000							45.0	42.5
49000							45.5	42.9
50000							46.0	43.4
52000							47.0	44.3
54000							47.9	45.2
56000							48.9	46.1
58000							49.8	46.9
60000							50.7	47.8
62000							51.6	48.6
64000							52.4	49.4
66000							53.3	50.3
68000							54.2	51.1
70000							55.0	51.8
72000							55.8	52.6
74000								53.4
76000								54.2
78000								54.9
80000								55.6
82000								56.4
84000								57.1
86000								57.8
88000								58.5
90000								59.2
92000								59.9
94000								60.6
96000								61.3
98000								61.9
100000								62.6
102000								63.3
104000								63.9
106000								64.6
108000								65.2
110000								65.9
112000								66.5
114000								67.1
116000								67.7

Table 5

6 inch to 24 inch LEOPOLD-LAGCO^{tm} Flumes

Flow in GPM vs. Head Height in Inches

Flow	6"	8"	10"	12"	15"	18"	21"	24"
10	.9	.7	.7	.6	.5	.5	.4	.4
20	1.4	1.2	1.0	.9	.8	.7	.6	.6
30	1.8	1.5	1.3	1.2	1.0	.9	.8	.8
40	2.2	1.8	1.6	1.4	1.2	1.1	1.0	.9
50	2.5	2.1	1.8	1.6	1.4	1.3	1.2	1.1
60	2.8	2.4	2.1	1.9	1.6	1.4	1.3	1.2
70	3.1	2.6	2.3	2.0	1.8	1.6	1.4	1.3
80	3.4	2.9	2.5	2.2	1.9	1.7	1.6	1.5
90	3.7	3.1	2.7	2.4	2.1	1.9	1.7	1.6
100	3.9	3.3	2.9	2.6	2.2	2.0	1.8	1.7
115	4.3	3.6	3.2	2.8	2.5	2.2	2.0	1.8
130	4.7	3.9	3.4	3.1	2.7	2.4	2.2	2.0
145	5.0	4.2	3.7	3.3	2.9	2.6	2.3	2.1
160	5.4	4.5	3.9	3.5	3.0	2.7	2.5	2.3
175	5.7	4.7	4.1	3.7	3.2	2.9	2.6	2.4
190	6.0	5.0	4.4	3.9	3.4	3.0	2.8	2.5
205		5.3	4.6	4.1	3.6	3.2	2.9	2.7
220		5.5	4.8	4.3	3.7	3.3	3.0	2.8
235		5.7	5.0	4.5	3.9	3.5	3.2	2.9
250		6.0	5.2	4.7	4.1	3.6	3.3	3.0
275		6.4	5.5	5.0	4.3	3.9	3.5	3.2
300		6.7	5.9	5.2	4.6	4.1	3.7	3.4
325			6.2	5.5	4.8	4.3	3.9	3.6
350			6.5	5.8	5.0	4.5	4.1	3.8
375			6.8	6.1	5.3	4.7	4.3	4.0
400			7.1	6.3	5.5	4.9	4.5	4.1
425			7.3	6.6	5.7	5.1	4.7	4.3
450			7.6	6.8	5.9	5.3	4.8	4.4
475			7.9	7.1	6.1	5.5	5.0	4.6
500			8.2	7.3	6.4	5.7	5.2	4.8
525			8.4	7.5	6.6	5.9	5.3	4.9
550				7.8	6.8	6.0	5.5	5.1
575				8.0	7.0	6.2	5.7	5.2
600				8.2	7.2	6.4	5.8	5.4
625				8.4	7.3	6.6	6.0	5.5
650				8.6	7.5	6.7	6.1	5.6
675				8.9	7.7	6.9	6.3	5.8
700				9.1	7.9	7.1	6.4	5.9
725				9.3	8.1	7.2	6.6	6.1
750				9.5	8.3	7.4	6.7	6.2
800				9.9	8.6	7.7	7.0	6.4
850				10.3	9.0	8.0	7.3	6.7
900					9.3	8.3	7.6	7.0
950					9.6	8.6	7.8	7.2
1000					9.9	8.9	8.1	7.4
1050					10.3	9.2	8.3	7.7
1100					10.6	9.5	8.6	7.9
1150					10.9	9.7	8.9	8.2
1200					11.2	10.0	9.1	8.4
1250					11.5	10.3	9.3	8.6
1300					11.8	10.5	9.6	8.8
1350					12.1	10.8	9.8	9.0
1400					12.4	11.1	10.1	9.3
1450						11.3	10.3	9.5
1500						11.6	10.5	9.7
1550						11.8	10.7	9.9
1600						12.0	11.0	10.1
1650						12.3	11.2	10.3
1700						12.5	11.4	10.5
1750						12.8	11.6	10.7

6 inch to 24 inch LEOPOLD-LAGCO^{tm} Flumes

Flow in GPM vs. Head Height in Inches

Flow	6"	8"	10"	12"	15"	18"	21"	24"
1800						13.0	11.8	10.9
1850						13.2	12.0	11.1
1900						13.5	12.2	11.3
1950						13.7	12.5	11.5
2000						13.9	12.7	11.7
2050						14.1	12.9	11.8
2100						14.4	13.1	12.0
2150							13.3	12.2
2200							13.5	12.4
2250							13.7	12.6
2300							13.9	12.8
2350							14.0	12.9
2400							14.2	13.1
2450							14.4	13.3
2500							14.6	13.5
2600							15.0	13.8
2700							15.4	14.2
2800							15.7	14.5
2900							16.1	14.8
3000							16.5	15.2
3100							16.8	15.5
3200							17.2	15.8
3300							17.5	16.1
3400							17.8	16.4
3500							18.2	16.7
3600							18.5	17.0
3700							18.8	17.4
3800							19.2	17.7
3900							19.5	18.0
4000							19.8	18.2
4100							20.1	18.5
4200							20.4	18.8
4300							20.8	19.1

Table 6

30 inch to 72 inch LEOPOLD-LAGCO™ Flumes

Flow	Flow in GPM vs. Head Height in Inches							
	30"	36"	42"	48"	54"	60"	66"	72"
50	.9	.8	.8	.7	.7	.6	.6	.5
100	1.5	1.3	1.2	1.1	1.0	1.0	.9	.9
150	1.9	1.7	1.5	1.4	1.3	1.2	1.2	1.1
200	2.3	2.0	1.9	1.7	1.6	1.5	1.4	1.3
250	2.6	2.4	2.2	2.0	1.8	1.7	1.6	1.5
300	3.0	2.7	2.4	2.2	2.1	1.9	1.8	1.7
350	3.3	2.9	2.7	2.5	2.3	2.1	2.0	1.9
400	3.6	3.2	2.9	2.7	2.5	2.3	2.2	2.1
450	3.9	3.5	3.1	2.9	2.7	2.5	2.4	2.3
500	4.1	3.7	3.4	3.1	2.9	2.7	2.6	2.4
550	4.4	3.9	3.6	3.3	3.1	2.9	2.7	2.6
600	4.7	4.2	3.8	3.5	3.2	3.0	2.9	2.7
650	4.9	4.4	4.0	3.7	3.4	3.2	3.0	2.9
700	5.2	4.6	4.2	3.9	3.6	3.4	3.2	3.0
750	5.4	4.8	4.4	4.0	3.8	3.5	3.3	3.1
800	5.6	5.0	4.6	4.2	3.9	3.7	3.5	3.3
850	5.8	5.2	4.8	4.4	4.1	3.8	3.6	3.4
900	6.1	5.4	4.9	4.5	4.2	4.0	3.7	3.5
950	6.3	5.6	5.1	4.7	4.4	4.1	3.9	3.7
1000	6.5	5.8	5.3	4.9	4.5	4.2	4.0	3.8
1100	6.9	6.2	5.6	5.2	4.8	4.5	4.2	4.0
1200	7.3	6.5	5.9	5.5	5.1	4.8	4.5	4.3
1300	7.7	6.9	6.3	5.8	5.4	5.0	4.7	4.5
1400	8.1	7.2	6.6	6.0	5.6	5.3	5.0	4.7
1500	8.4	7.5	6.9	6.3	5.9	5.5	5.2	4.9
1600	8.8	7.9	7.1	6.6	6.1	5.7	5.4	5.1
1700	9.1	8.2	7.4	6.8	6.4	6.0	5.6	5.3
1800	9.5	8.5	7.7	7.1	6.6	6.2	5.8	5.5
1900	9.8	8.8	8.0	7.4	6.8	6.4	6.0	5.7
2000	10.2	9.1	8.3	7.6	7.1	6.6	6.3	5.9
2100	10.5	9.4	8.5	7.9	7.3	6.8	6.5	6.1
2200	10.8	9.7	8.8	8.1	7.5	7.1	6.6	6.3
2300	11.1	9.9	9.0	8.3	7.7	7.3	6.8	6.5
2400	11.4	10.2	9.3	8.6	8.0	7.5	7.0	6.7
2500	11.7	10.5	9.5	8.8	8.2	7.7	7.2	6.8
2600	12.0	10.8	9.8	9.0	8.4	7.9	7.4	7.0
2700	12.3	11.0	10.0	9.2	8.6	8.0	7.6	7.2
2800	12.6	11.3	10.3	9.5	8.8	8.2	7.8	7.4
2900	12.9	11.5	10.5	9.7	9.0	8.4	7.9	7.5
3000	13.2	11.8	10.7	9.9	9.2	8.6	8.1	7.7
3100	13.5	12.1	11.0	10.1	9.4	8.8	8.3	7.9
3200	13.8	12.3	11.2	10.3	9.6	9.0	8.5	8.0
3300	14.0	12.6	11.4	10.5	9.8	9.2	8.6	8.2
3400	14.3	12.8	11.6	10.7	10.0	9.3	8.8	8.3
3500	14.6	13.0	11.9	10.9	10.2	9.5	9.0	8.5
3600	14.9	13.3	12.1	11.1	10.3	9.7	9.1	8.7
3700	15.1	13.5	12.3	11.3	10.5	9.9	9.3	8.8
3800	15.4	13.8	12.5	11.5	10.7	10.0	9.5	9.0
3900	15.6	14.0	12.7	11.7	10.9	10.2	9.6	9.1
4000	15.9	14.2	12.9	11.9	11.1	10.4	9.8	9.3
4100	16.2	14.4	13.1	12.1	11.3	10.5	9.9	9.4
4200	16.4	14.7	13.3	12.3	11.4	10.7	10.1	9.6
4300	16.7	14.9	13.5	12.5	11.6	10.9	10.3	9.7
4400	16.9	15.1	13.7	12.7	11.8	11.0	10.4	9.9
4500	17.2	15.3	14.0	12.8	11.9	11.2	10.6	10.0
4600	17.4	15.6	14.1	13.0	12.1	11.4	10.7	10.2
4700	17.7	15.8	14.3	13.2	12.3	11.5	10.9	10.3
4800	17.9	16.0	14.5	13.4	12.5	11.7	11.0	10.4
4900	18.1	16.2	14.7	13.6	12.6	11.8	11.2	10.6
5000	18.4	16.4	14.9	13.8	12.8	12.0	11.3	10.7

30 inch to 72 inch LEOPOLD-LAGCO™ Flumes

Flow	Flow in GPM vs. Head Height in Inches							
	30"	36"	42"	48"	54"	60"	66"	72"
5200	18.8	16.8	15.3	14.1	13.1	12.3	11.6	11.0
5400	19.3	17.3	15.7	14.5	13.4	12.6	11.9	11.3
5600	19.8	17.7	16.1	14.8	13.8	12.9	12.2	11.5
5800	20.2	18.1	16.4	15.1	14.1	13.2	12.4	11.8
6000	20.7	18.5	16.8	15.5	14.4	13.5	12.7	12.1
6200	21.1	18.9	17.2	15.8	14.7	13.8	13.0	12.3
6400	21.6	19.3	17.5	16.1	15.0	14.1	13.3	12.6
6600	22.0	19.6	17.9	16.5	15.3	14.3	13.5	12.8
6800	22.4	20.0	18.2	16.8	15.6	14.6	13.8	13.1
7000	22.8	20.4	18.6	17.1	15.9	14.9	14.1	13.3
7200	23.3	20.8	18.9	17.4	16.2	15.2	14.3	13.6
7400	23.7	21.2	19.2	17.7	16.5	15.4	14.6	13.8
7600		21.5	19.6	18.0	16.8	15.7	14.8	14.0
7800		21.9	19.9	18.3	17.1	16.0	15.1	14.3
8000		22.3	20.2	18.6	17.3	16.2	15.3	14.5
8200		22.6	20.6	18.9	17.6	16.5	15.6	14.8
8400		23.0	20.9	19.2	17.9	16.8	15.8	15.0
8600		23.3	21.2	19.5	18.2	17.0	16.1	15.2
8800		23.7	21.5	19.8	18.4	17.3	16.3	15.4
9000		24.0	21.8	20.1	18.7	17.5	16.5	15.7
9200		24.4	22.1	20.4	19.0	17.8	16.8	15.9
9400		24.7	22.5	20.7	19.2	18.0	17.0	16.1
9600		25.0	22.8	21.0	19.5	18.3	17.2	16.3
9800		25.4	23.1	21.2	19.8	18.5	17.5	16.6
10000		25.7	23.4	21.5	20.0	18.8	17.7	16.8
10500		26.5	24.1	22.2	20.7	19.4	18.3	17.3
11000		27.3	24.9	22.9	21.3	20.0	18.8	17.8
11500			25.6	23.6	21.9	20.5	19.4	18.4
12000			26.3	24.2	22.5	21.1	19.9	18.9
12500			27.0	24.9	23.1	21.7	20.4	19.4
13000			27.7	25.5	23.7	22.2	21.0	19.9
13500			28.4	26.1	24.3	22.8	21.5	20.4
14000			29.1	26.8	24.9	23.3	22.0	20.8
14500			29.7	27.4	25.5	23.9	22.5	21.3
15000			30.4	28.0	26.0	24.4	23.0	21.8
15500			31.0	28.6	26.6	24.9	23.5	22.3
16000				29.2	27.1	25.4	24.0	22.7
16500				29.8	27.7	25.9	24.5	23.2
17000				30.3	28.2	26.4	24.9	23.6
17500				30.9	28.7	26.9	25.4	24.1
18000				31.5	29.3	27.4	25.9	24.5
18500				32.0	29.8	27.9	26.3	25.0
19000				32.6	30.3	28.4	26.8	25.4
19500				33.2	30.8	28.9	27.2	25.8
20000				33.7	31.3	29.4	27.7	26.3
20500				34.2	31.8	29.8	28.1	26.7
21000				34.8	32.3	30.3	28.6	27.1
21500				35.3	32.8	30.8	29.0	27.5
22000				35.8	33.3	31.2	29.5	27.9
22500					33.8	31.7	29.9	28.3
23000					34.3	32.1	30.3	28.7
23500					34.8	32.6	30.7	29.1
24000					35.3	33.0	31.2	29.5
24500					35.7	33.5	31.6	29.9
25000					36.2	33.9	32.0	30.3
25500					36.7	34.4	32.4	30.7
26000					37.1	34.8	32.8	31.1
26500					37.6	35.2	33.2	31.5
27000					38.0	35.7	33.6	31.9
27500					38.5	36.1	34.0	32.3

Table 6

30 inch to 72 inch LEOPOLD-LAGCO^{tm} Flumes

Flow	Flow in GPM vs. Head Height in Inches 30"	36"	42"	48"	54"	60"	66"	72"
28000					39.0	36.5	34.4	32.6
28500					39.4	36.9	34.8	33.0
29000						37.3	35.2	33.4
29500						37.8	35.6	33.7
30000						38.2	36.0	34.1
30500						38.6	36.4	34.5
31000						39.0	36.8	34.8
31500						39.4	37.1	35.2
32000						39.8	37.5	35.6
32500						40.2	37.9	35.9
33000						40.6	38.3	36.3
33500						41.0	38.7	36.6
34000						41.4	39.0	37.0
34500						41.8	39.4	37.3
35000						42.2	39.8	37.7
35500						42.6	40.1	38.0
36000						42.9	40.5	38.4
36500						43.3	40.9	38.7
37000						43.7	41.2	39.1
37500						44.1	41.6	39.4
38000						44.5	41.9	39.7
38500						44.9	42.3	40.1
39000						45.2	42.6	40.4
39500						45.6	43.0	40.8
40000							43.4	41.1
41000							44.0	41.7
42000							44.7	42.4
43000							45.4	43.1
44000							46.1	43.7
45000							46.8	44.3
46000							47.4	45.0
47000							48.1	45.6
48000							48.8	46.2
49000							49.4	46.8
50000							50.1	47.5
51000							50.7	48.1
52000							51.4	48.7
53000								49.3
54000								49.9
55000								50.5
56000								51.1
57000								51.7
58000								52.2
59000								52.8
60000								53.4
61000								54.0

Table 7

1 ft to 5 ft RECTANGULAR Weirs with End Contractions

Flow in GPM vs. Head Height in Inches

Flow	1'	1.5'	2'	3'	4'	5'
100	2.0	1.5	1.3	1.0	.8	.7
200	3.3	2.4	2.0	1.5	1.2	1.1
300	4.3	3.2	2.6	2.0	1.6	1.4
400	5.3	3.9	3.2	2.4	2.0	1.7
500	6.2	4.6	3.7	2.8	2.3	2.0
600	7.1	5.2	4.2	3.2	2.6	2.2
700	7.9	5.8	4.7	3.5	2.9	2.5
800	8.8	6.3	5.1	3.9	3.2	2.7
900	9.6	6.9	5.6	4.2	3.4	2.9
1000	10.4	7.4	6.0	4.5	3.7	3.2
1100	11.2	7.9	6.4	4.8	3.9	3.4
1200	12.0	8.4	6.8	5.1	4.2	3.6
1300	12.8	8.9	7.2	5.4	4.4	3.8
1400	13.6	9.4	7.6	5.6	4.6	4.0
1500	14.4	9.9	7.9	5.9	4.8	4.1
1600	15.3	10.4	8.3	6.2	5.1	4.3
1700	16.1	10.9	8.7	6.4	5.3	4.5
1800	16.9	11.3	9.0	6.7	5.5	4.7
1900	17.8	11.8	9.4	6.9	5.7	4.9
2000	18.7	12.2	9.7	7.2	5.9	5.0
2100	19.6	12.7	10.0	7.4	6.1	5.2
2200	20.5	13.2	10.4	7.7	6.3	5.4
2300	21.5	13.6	10.7	7.9	6.5	5.5
2400	22.5	14.1	11.0	8.2	6.6	5.7
2500	23.6	14.5	11.4	8.4	6.8	5.9
2600	24.7	14.9	11.7	8.6	7.0	6.0
2700	25.9	15.4	12.0	8.8	7.2	6.2
2800	27.3	15.8	12.3	9.1	7.4	6.3
2900	28.9	16.3	12.7	9.3	7.6	6.5
3000	30.9	16.7	13.0	9.5	7.7	6.6
3200		17.6	13.6	9.9	8.1	6.9
3400		18.4	14.2	10.4	8.4	7.2
3600		19.3	14.8	10.8	8.8	7.5
3800		20.2	15.4	11.2	9.1	7.8
4000		21.1	16.0	11.6	9.4	8.0
4200		22.0	16.6	12.0	9.7	8.3
4400		22.8	17.2	12.4	10.1	8.6
4600		23.7	17.8	12.8	10.4	8.9
4800		24.7	18.4	13.2	10.7	9.1
5000		25.6	18.9	13.6	11.0	9.4
5200		26.5	19.5	14.0	11.3	9.6
5400		27.5	20.1	14.3	11.6	9.9
5600		28.4	20.7	14.7	11.9	10.1
5800		29.4	21.2	15.1	12.2	10.4
6000		30.4	21.8	15.5	12.5	10.6
6200		31.5	22.4	15.8	12.7	10.8
6400		32.5	22.9	16.2	13.0	11.1
6600		33.7	23.5	16.5	13.3	11.3
6800		34.8	24.1	16.9	13.6	11.6
7000		36.0	24.6	17.3	13.9	11.8
7200		37.3	25.2	17.6	14.1	12.0
7400		38.6	25.8	18.0	14.4	12.2
7600		40.1	26.3	18.3	14.7	12.5
7800		41.7	26.9	18.7	14.9	12.7
8000		43.5	27.5	19.0	15.2	12.9
8200		45.6	28.1	19.3	15.5	13.1
8400		48.3	28.6	19.7	15.7	13.4
8600			29.2	20.0	16.0	13.6
8800			29.8	20.4	16.3	13.8
9000			30.4	20.7	16.5	14.0

1 ft to 5 ft RECTANGULAR Weirs with End Contractions

Flow in GPM vs. Head Height in Inches

Flow	1'	1.5'	2'	3'	4'	5'
9200			31.0	21.0	16.8	14.2
9400			31.5	21.4	17.0	14.4
9600			32.1	21.7	17.3	14.6
9800			32.7	22.0	17.5	14.9
10000			33.3	22.4	17.8	15.1
10200			33.9	22.7	18.0	15.3
10400			34.5	23.0	18.3	15.5
10600			35.1	23.3	18.5	15.7
10800			35.7	23.7	18.8	15.9
11000			36.4	24.0	19.0	16.1
11200			37.0	24.3	19.3	16.3
11400			37.6	24.6	19.5	16.5
11600			38.2	25.0	19.8	16.7
11800			38.9	25.3	20.0	16.9
12000			39.5	25.6	20.2	17.1
12200			40.2	25.9	20.5	17.3
12400			40.9	26.2	20.7	17.5
12600			41.5	26.6	20.9	17.7
12800			42.2	26.9	21.2	17.9
13000			42.9	27.2	21.4	18.1
13200			43.6	27.5	21.7	18.3
13400			44.3	27.8	21.9	18.5
13600			45.1	28.1	22.1	18.7
13800			45.8	28.5	22.4	18.8
14000			46.6	28.8	22.6	19.0
14200			47.3	29.1	22.8	19.2
14400			48.1	29.4	23.0	19.4
14600			49.0	29.7	23.3	19.6
14800			49.8	30.0	23.5	19.8
15000			50.7	30.3	23.7	20.0
15500			52.9	31.1	24.3	20.4
16000			55.5	31.9	24.9	20.9
16500			58.4	32.7	25.4	21.4
17000				33.4	26.0	21.8
17500				34.2	26.5	22.3
18000				35.0	27.1	22.7
18500				35.7	27.6	23.1
19000				36.5	28.2	23.6
19500				37.3	28.7	24.0
20000				38.1	29.2	24.5
20500				38.8	29.8	24.9
21000				39.6	30.3	25.3
21500				40.4	30.8	25.7
22000				41.2	31.4	26.2
22500				41.9	31.9	26.6
23000				42.7	32.4	27.0
23500				43.5	33.0	27.4
24000				44.3	33.5	27.9
24500				45.1	34.0	28.3
25000				45.9	34.5	28.7
25500				46.7	35.0	29.1
26000				47.5	35.5	29.5
26500				48.3	36.1	29.9
27000				49.1	36.6	30.3
27500				49.9	37.1	30.7
28000				50.7	37.6	31.1
28500				51.5	38.1	31.5
29000				52.3	38.6	31.9
29500				53.2	39.1	32.3
30000				54.0	39.6	32.7

Table 7

1 ft to 5 ft RECTANGULAR Weirs with End Contractions

Flow in GPM vs. Head Height in Inches

Flow	1'	1.5'	2'	3'	4'	5'
30500				54.8	40.1	33.1
31000				55.7	40.7	33.5
31500				56.6	41.2	33.9
32000				57.4	41.7	34.3
32500				58.3	42.2	34.7
33000				59.2	42.7	35.1
33500				60.1	43.2	35.4
34000				61.0	43.7	35.8
34500					44.2	36.2
35000					44.7	36.6
35500					45.2	37.0
36000					45.7	37.4
36500					46.2	37.8
37000					46.7	38.1
37500					47.2	38.5
38000					47.7	38.9
38500					48.2	39.3
39000					48.7	39.6
39500					49.2	40.0
40000					49.7	40.4
41000					50.7	41.2
42000					51.7	41.9
43000					52.7	42.6
44000					53.7	43.4
45000					54.7	44.1
46000					55.7	44.9
47000					56.7	45.6
48000					57.8	46.3
49000					58.8	47.1
50000					59.8	47.8
51000					60.8	48.5
52000						49.3
53000						50.0
54000						50.7
55000						51.4
56000						52.1
57000						52.9
58000						53.6
59000						54.3
60000						55.0
61000						55.7
62000						56.5
63000						57.2
64000						57.9
65000						58.6
66000						59.3
67000						60.1
68000						60.8

Table 8

6 ft to 10 ft RECTANGULAR Weirs with End Contractions

Flow	Flow in GPM vs. Head Height in Inches 6'	7'	8'	9'	10'
100	.6	.5	.5	.5	.4
200	1.0	.9	.8	.7	.7
300	1.2	1.1	1.0	1.0	.9
400	1.5	1.4	1.2	1.2	1.1
500	1.8	1.6	1.4	1.3	1.2
600	2.0	1.8	1.6	1.5	1.4
700	2.2	2.0	1.8	1.7	1.6
800	2.4	2.2	2.0	1.8	1.7
900	2.6	2.3	2.1	2.0	1.8
1000	2.8	2.5	2.3	2.1	2.0
1100	3.0	2.7	2.5	2.3	2.1
1200	3.2	2.8	2.6	2.4	2.2
1300	3.3	3.0	2.7	2.5	2.4
1400	3.5	3.2	2.9	2.7	2.5
1500	3.7	3.3	3.0	2.8	2.6
1600	3.8	3.4	3.2	2.9	2.7
1700	4.0	3.6	3.3	3.0	2.8
1800	4.1	3.7	3.4	3.1	2.9
1900	4.3	3.9	3.5	3.3	3.0
2000	4.4	4.0	3.7	3.4	3.1
2100	4.6	4.1	3.8	3.5	3.3
2200	4.7	4.3	3.9	3.6	3.4
2300	4.9	4.4	4.0	3.7	3.5
2400	5.0	4.5	4.1	3.8	3.6
2500	5.2	4.7	4.2	3.9	3.7
2600	5.3	4.8	4.4	4.0	3.8
2700	5.4	4.9	4.5	4.1	3.8
2800	5.6	5.0	4.6	4.2	3.9
2900	5.7	5.1	4.7	4.3	4.0
3000	5.8	5.3	4.8	4.4	4.1
3200	6.1	5.5	5.0	4.6	4.3
3400	6.4	5.7	5.2	4.8	4.5
3600	6.6	5.9	5.4	5.0	4.7
3800	6.9	6.2	5.6	5.2	4.8
4000	7.1	6.4	5.8	5.4	5.0
4200	7.3	6.6	6.0	5.6	5.2
4400	7.6	6.8	6.2	5.7	5.3
4600	7.8	7.0	6.4	5.9	5.5
4800	8.0	7.2	6.6	6.1	5.7
5000	8.2	7.4	6.8	6.2	5.8
5200	8.5	7.6	6.9	6.4	6.0
5400	8.7	7.8	7.1	6.6	6.1
5600	8.9	8.0	7.3	6.7	6.3
5800	9.1	8.2	7.5	6.9	6.4
6000	9.3	8.4	7.7	7.1	6.6
6200	9.5	8.6	7.8	7.2	6.7
6400	9.8	8.8	8.0	7.4	6.9
6600	10.0	8.9	8.2	7.5	7.0
6800	10.2	9.1	8.3	7.7	7.1
7000	10.4	9.3	8.5	7.8	7.3
7200	10.6	9.5	8.7	8.0	7.4
7400	10.8	9.7	8.8	8.1	7.6
7600	11.0	9.8	9.0	8.3	7.7
7800	11.2	10.0	9.1	8.4	7.8
8000	11.4	10.2	9.3	8.6	8.0
8200	11.5	10.4	9.4	8.7	8.1
8400	11.7	10.5	9.6	8.9	8.2
8600	11.9	10.7	9.8	9.0	8.4
8800	12.1	10.9	9.9	9.1	8.5
9000	12.3	11.0	10.1	9.3	8.6

6 ft to 10 ft RECTANGULAR Weirs with End Contractions

Flow	Flow in GPM vs. Head Height in Inches 6'	7'	8'	9'	10'
9200	12.5	11.2	10.2	9.4	8.8
9400	12.7	11.4	10.4	9.6	8.9
9600	12.9	11.5	10.5	9.7	9.0
9800	13.0	11.7	10.7	9.8	9.1
10000	13.2	11.9	10.8	10.0	9.3
10200	13.4	12.0	11.0	10.1	9.4
10400	13.6	12.2	11.1	10.2	9.5
10600	13.8	12.3	11.2	10.4	9.6
10800	13.9	12.5	11.4	10.5	9.8
11000	14.1	12.7	11.5	10.6	9.9
11200	14.3	12.8	11.7	10.8	10.0
11400	14.5	13.0	11.8	10.9	10.1
11600	14.6	13.1	11.9	11.0	10.2
11800	14.8	13.3	12.1	11.1	10.4
12000	15.0	13.4	12.2	11.3	10.5
12200	15.1	13.6	12.4	11.4	10.6
12400	15.3	13.7	12.5	11.5	10.7
12600	15.5	13.9	12.6	11.6	10.8
12800	15.7	14.0	12.8	11.8	10.9
13000	15.8	14.2	12.9	11.9	11.1
13200	16.0	14.3	13.0	12.0	11.2
13400	16.2	14.5	13.2	12.1	11.3
13600	16.3	14.6	13.3	12.3	11.4
13800	16.5	14.8	13.4	12.4	11.5
14000	16.7	14.9	13.6	12.5	11.6
14200	16.8	15.1	13.7	12.6	11.7
14400	17.0	15.2	13.8	12.7	11.9
14600	17.1	15.3	14.0	12.9	12.0
14800	17.3	15.5	14.1	13.0	12.1
15000	17.5	15.6	14.2	13.1	12.2
15500	17.9	16.0	14.6	13.4	12.5
16000	18.3	16.3	14.9	13.7	12.7
16500	18.7	16.7	15.2	14.0	13.0
17000	19.0	17.0	15.5	14.3	13.3
17500	19.4	17.4	15.8	14.6	13.5
18000	19.8	17.7	16.1	14.8	13.8
18500	20.2	18.1	16.4	15.1	14.0
19000	20.6	18.4	16.7	15.4	14.3
19500	20.9	18.7	17.0	15.7	14.6
20000	21.3	19.0	17.3	15.9	14.8
20500	21.7	19.4	17.6	16.2	15.1
21000	22.1	19.7	17.9	16.5	15.3
21500	22.4	20.0	18.2	16.7	15.5
22000	22.8	20.3	18.5	17.0	15.8
22500	23.1	20.7	18.8	17.3	16.0
23000	23.5	21.0	19.1	17.5	16.3
23500	23.9	21.3	19.3	17.8	16.5
24000	24.2	21.6	19.6	18.0	16.8
24500	24.6	21.9	19.9	18.3	17.0
25000	24.9	22.2	20.2	18.6	17.2
25500	25.3	22.5	20.5	18.8	17.5
26000	25.6	22.8	20.7	19.1	17.7
26500	26.0	23.1	21.0	19.3	17.9
27000	26.3	23.4	21.3	19.6	18.2
27500	26.6	23.7	21.5	19.8	18.4
28000	27.0	24.0	21.8	20.0	18.6
28500	27.3	24.3	22.1	20.3	18.8
29000	27.7	24.6	22.3	20.5	19.1
29500	28.0	24.9	22.6	20.8	19.3
30000	28.3	25.2	22.9	21.0	19.5

Table 8

6 ft to 10 ft RECTANGULAR Weirs with End Contractions

Flow	Flow in GPM vs. Head Height in Inches 6'	7'	8'	9'	10'
30500	28.7	25.5	23.1	21.3	19.7
31000	29.0	25.8	23.4	21.5	19.9
31500	29.3	26.1	23.7	21.7	20.2
32000	29.6	26.4	23.9	22.0	20.4
32500	30.0	26.7	24.2	22.2	20.6
33000	30.3	27.0	24.4	22.4	20.8
33500	30.6	27.2	24.7	22.7	21.0
34000	31.0	27.5	24.9	22.9	21.2
34500	31.3	27.8	25.2	23.1	21.5
35000	31.6	28.1	25.4	23.4	21.7
35500	31.9	28.4	25.7	23.6	21.9
36000	32.2	28.6	25.9	23.8	22.1
36500	32.6	28.9	26.2	24.0	22.3
37000	32.9	29.2	26.4	24.3	22.5
37500	33.2	29.5	26.7	24.5	22.7
38000	33.5	29.8	26.9	24.7	22.9
38500	33.8	30.0	27.2	24.9	23.1
39000	34.1	30.3	27.4	25.2	23.3
39500	34.5	30.6	27.7	25.4	23.5
40000	34.8	30.8	27.9	25.6	23.7
41000	35.4	31.4	28.4	26.1	24.1
42000	36.0	31.9	28.9	26.5	24.6
43000	36.6	32.5	29.4	26.9	25.0
44000	37.2	33.0	29.8	27.4	25.3
45000	37.8	33.5	30.3	27.8	25.7
46000	38.5	34.0	30.8	28.2	26.1
47000	39.1	34.6	31.2	28.6	26.5
48000	39.7	35.1	31.7	29.0	26.9
49000	40.3	35.6	32.2	29.5	27.3
50000	40.9	36.1	32.6	29.9	27.7
51000	41.4	36.6	33.1	30.3	28.1
52000	42.0	37.1	33.5	30.7	28.4
53000	42.6	37.7	34.0	31.1	28.8
54000	43.2	38.2	34.4	31.5	29.2
55000	43.8	38.7	34.9	31.9	29.6
56000	44.4	39.2	35.3	32.3	29.9
57000	45.0	39.7	35.8	32.7	30.3
58000	45.5	40.2	36.2	33.1	30.7
59000	46.1	40.7	36.6	33.5	31.0
60000	46.7	41.1	37.1	33.9	31.4
61000	47.3	41.6	37.5	34.3	31.8
62000	47.9	42.1	37.9	34.7	32.1
63000	48.4	42.6	38.4	35.1	32.5
64000	49.0	43.1	38.8	35.5	32.8
65000	49.6	43.6	39.2	35.9	33.2
66000	50.1	44.1	39.7	36.3	33.5
67000	50.7	44.6	40.1	36.6	33.9
68000	51.3	45.0	40.5	37.0	34.2
69000	51.8	45.5	40.9	37.4	34.6
70000	52.4	46.0	41.4	37.8	34.9
71000	53.0	46.5	41.8	38.2	35.3
72000	53.5	46.9	42.2	38.5	35.6
73000	54.1	47.4	42.6	38.9	36.0
74000	54.6	47.9	43.0	39.3	36.3
75000	55.2	48.4	43.4	39.7	36.7
76000	55.8	48.8	43.9	40.0	37.0
77000	56.3	49.3	44.3	40.4	37.3
78000	56.9	49.8	44.7	40.8	37.7
79000	57.4	50.2	45.1	41.1	38.0
80000	58.0	50.7	45.5	41.5	38.3

6 ft to 10 ft RECTANGULAR Weirs with End Contractions

Flow	Flow in GPM vs. Head Height in Inches 6'	7'	8'	9'	10'
81000	58.5	51.2	45.9	41.9	38.7
82000	59.1	51.6	46.3	42.2	39.0
83000	59.6	52.1	46.7	42.6	39.3
84000	60.2	52.6	47.1	43.0	39.7
85000	60.7	53.0	47.5	43.3	40.0
86000		53.5	47.9	43.7	40.3
87000		53.9	48.3	44.1	40.7
88000		54.4	48.7	44.4	41.0
89000		54.9	49.1	44.8	41.3
90000		55.3	49.5	45.1	41.6
91000		55.8	49.9	45.5	42.0
92000		56.2	50.3	45.8	42.3
93000		56.7	50.7	46.2	42.6
94000		57.1	51.1	46.5	42.9
95000		57.6	51.5	46.9	43.2
96000		58.0	51.9	47.2	43.6
97000		58.5	52.3	47.6	43.9
98000		58.9	52.7	47.9	44.2
99000		59.4	53.1	48.3	44.5
00000		59.8	53.4	48.6	44.8
02000		60.7	54.2	49.3	45.5
04000			55.0	50.0	46.1
06000			55.8	50.7	46.7
08000			56.5	51.4	47.3
10000			57.3	52.1	48.0
12000			58.1	52.7	48.6
14000			58.8	53.4	49.2
16000			59.6	54.1	49.8
18000			60.3	54.8	50.4
20000				55.4	51.0
22000				56.1	51.6
24000				56.8	52.2
26000				57.4	52.8
28000				58.1	53.4
30000				58.7	54.0
35000				60.4	55.5
40000					56.9
45000					58.4
50000					59.8

Table 9

22.5° to 120° TRIANGULAR or V-NOTCH Wiers with End Contractions

Flow	Flow in GPM vs. Head Height in Inches					
	22.5°	30°	45°	60°	90°	120°
5	2.6	2.3	1.9	1.7	1.3	1.1
10	3.4	3.0	2.5	2.2	1.8	1.4
15	4.0	3.6	3.0	2.6	2.1	1.7
20	4.5	4.0	3.3	2.9	2.3	1.9
25	4.9	4.4	3.7	3.2	2.6	2.1
30	5.3	4.7	3.9	3.5	2.8	2.2
35	5.6	5.0	4.2	3.7	2.9	2.4
40	6.0	5.3	4.4	3.9	3.1	2.5
45	6.3	5.5	4.7	4.1	3.3	2.6
50	6.5	5.8	4.9	4.2	3.4	2.7
60	7.0	6.2	5.2	4.6	3.7	2.9
70	7.5	6.6	5.6	4.9	3.9	3.1
80	7.9	7.0	5.9	5.1	4.1	3.3
90	8.3	7.3	6.2	5.4	4.3	3.5
100	8.6	7.7	6.4	5.6	4.5	3.6
115	9.1	8.1	6.8	5.9	4.8	3.8
130	9.6	8.5	7.1	6.3	5.0	4.0
145	10.0	8.9	7.5	6.5	5.2	4.2
160	10.5	9.3	7.8	6.8	5.4	4.4
175	10.8	9.6	8.1	7.1	5.7	4.5
190	11.2	9.9	8.3	7.3	5.8	4.7
205	11.6	10.2	8.6	7.5	6.0	4.8
220	11.9	10.5	8.8	7.7	6.2	5.0
235	12.2	10.8	9.1	7.9	6.4	5.1
250	12.5	11.1	9.3	8.1	6.5	5.2
275	13.0	11.5	9.7	8.5	6.8	5.4
300	13.5	12.0	10.0	8.8	7.0	5.6
325	13.9	12.3	10.4	9.1	7.3	5.8
350	14.3	12.7	10.7	9.3	7.5	6.0
375	14.8	13.1	11.0	9.6	7.7	6.2
400	15.1	13.4	11.3	9.9	7.9	6.3
425	15.5	13.8	11.5	10.1	8.1	6.5
450	15.9	14.1	11.8	10.3	8.3	6.6
475	16.2	14.4	12.1	10.6	8.5	6.8
500	16.6	14.7	12.3	10.8	8.6	6.9
550	17.2	15.3	12.8	11.2	9.0	7.2
600	17.8	15.8	13.3	11.6	9.3	7.5
650	18.4	16.3	13.7	12.0	9.6	7.7
700	19.0	16.8	14.1	12.4	9.9	7.9
750	19.5	17.3	14.5	12.7	10.2	8.2
800	20.0	17.8	14.9	13.0	10.5	8.4
850	20.5	18.2	15.3	13.4	10.7	8.6
900	21.0	18.6	15.6	13.7	11.0	8.8
950	21.5	19.1	16.0	14.0	11.2	9.0
1000	21.9	19.5	16.3	14.3	11.4	9.2
1050	22.4	19.8	16.7	14.6	11.7	9.4
1100	22.8	20.2	17.0	14.8	11.9	9.5
1150	23.2	20.6	17.3	15.1	12.1	9.7
1200	23.6	21.0	17.6	15.4	12.3	9.9
1250	24.0	21.3	17.9	15.6	12.5	10.0
1300	24.4	21.6	18.2	15.9	12.7	10.2
1350	24.8	22.0	18.4	16.1	12.9	10.4
1400	25.1	22.3	18.7	16.4	13.1	10.5
1450	25.5	22.6	19.0	16.6	13.3	10.7
1500	25.9	22.9	19.2	16.8	13.5	10.8
1550	26.2	23.2	19.5	17.1	13.7	10.9
1600	26.5	23.5	19.7	17.3	13.8	11.1
1650	26.9	23.8	20.0	17.5	14.0	11.2
1700	27.2	24.1	20.2	17.7	14.2	11.4
1750	27.5	24.4	20.5	17.9	14.4	11.5

22.5° to 120° TRIANGULAR or V-NOTCH Wiers with End Contractions

Flow	Flow in GPM vs. Head Height in Inches					
	22.5°	30°	45°	60°	90°	120°
1800	27.8	24.7	20.7	18.1	14.5	11.6
1850	28.2	25.0	20.9	18.3	14.7	11.8
1900	28.5	25.2	21.2	18.5	14.8	11.9
1950	28.8	25.5	21.4	18.7	15.0	12.0
2000	29.1	25.8	21.6	18.9	15.1	12.1
2100	29.6	26.3	22.0	19.3	15.5	12.4
2200	30.2	26.8	22.5	19.6	15.7	12.6
2300	30.7	27.3	22.9	20.0	16.0	12.8
2400	31.3	27.7	23.3	20.4	16.3	13.1
2500	31.8	28.2	23.7	20.7	16.6	13.3
2600	32.3	28.7	24.0	21.0	16.8	13.5
2700	32.8	29.1	24.4	21.3	17.1	13.7
2800	33.3	29.5	24.8	21.7	17.4	13.9
2900	33.8	29.9	25.1	22.0	17.6	14.1
3000	34.2	30.4	25.5	22.3	17.9	14.3
3100	34.7	30.8	25.8	22.6	18.1	14.5
3200	35.1	31.2	26.1	22.9	18.3	14.7
3300	35.6	31.6	26.5	23.2	18.6	14.9
3400	36.0	31.9	26.8	23.4	18.8	15.0
3500	36.4	32.3	27.1	23.7	19.0	15.2
3600		32.7	27.4	24.0	19.2	15.4
3700		33.1	27.7	24.3	19.4	15.6
3800		33.4	28.0	24.5	19.6	15.7
3900		33.8	28.3	24.8	19.9	15.9
4000		34.1	28.6	25.0	20.1	16.1
4100		34.5	28.9	25.3	20.3	16.2
4200		34.8	29.2	25.5	20.5	16.4
4300		35.1	29.5	25.8	20.7	16.6
4400		35.5	29.7	26.0	20.8	16.7
4500		35.8	30.0	26.3	21.0	16.9
4600		36.1	30.3	26.5	21.2	17.0
4700		36.4	30.5	26.7	21.4	17.2
4800			30.8	26.9	21.6	17.3
4900			31.1	27.2	21.8	17.4
5000			31.3	27.4	22.0	17.6
5200			31.8	27.8	22.3	17.9
5400			32.3	28.3	22.6	18.1
5600			32.8	28.7	23.0	18.4
5800			33.3	29.1	23.3	18.7
6000			33.7	29.5	23.6	18.9
6200			34.2	29.9	24.0	19.2
6400			34.6	30.3	24.3	19.4
6600			35.0	30.7	24.6	19.7
6800			35.5	31.0	24.9	19.9
7000			35.9	31.4	25.2	20.2
7200			36.3	31.8	25.4	20.4
7400				32.1	25.7	20.6
7600				32.5	26.0	20.8
7800				32.8	26.3	21.1
8000				33.1	26.6	21.3
8200				33.5	26.8	21.5
8400				33.8	27.1	21.7
8600				34.1	27.3	21.9
8800				34.4	27.6	22.1
9000				34.8	27.9	22.3
9200				35.1	28.1	22.5
9400				35.4	28.3	22.7
9600				35.7	28.6	22.9
9800				36.0	28.8	23.1
10000				36.3	29.1	23.3

Table 9

22.5° to 120° TRIANGULAR or V-NOTCH Wiers with End Contractions

Flow	Flow in GPM vs. Head Height in Inches 22.5°	30°	45°	60°	90°	120°
10500					29.6	23.8
11000					30.2	24.2
11500					30.8	24.6
12000					31.3	25.1
12500					31.8	25.5
13000					32.3	25.9
13500					32.8	26.3
14000					33.3	26.7
14500					33.8	27.1
15000					34.3	27.4
15500					34.7	27.8
16000					35.2	28.2
16500					35.6	28.5
17000					36.0	28.9
17500						29.2
18000						29.5
18500						29.9
19000						30.2
19500						30.5
20000						30.8
20500						31.1
21000						31.5
21500						31.8
22000						32.0
22500						32.3
23000						32.6
23500						32.9
24000						33.2
24500						33.5
25000						33.8
25500						34.0
26000						34.3
26500						34.6
27000						34.8
27500						35.1
28000						35.3
28500						35.6
29000						35.8
29500						36.1
30000						36.3

Table 10

1 ft to 5 ft CIPOLLETTI Weirs with End Contractions

Flow in GPM vs. Head Height in Inches

Flow	1'	1.5'	2'	3'	4'	5'
50	1.2	.9	.8	.6	.5	.4
100	2.0	1.5	1.2	.9	.8	.7
150	2.6	2.0	1.6	1.2	1.0	.9
200	3.1	2.4	2.0	1.5	1.2	1.1
250	3.6	2.8	2.3	1.7	1.4	1.2
300	4.1	3.1	2.6	2.0	1.6	1.4
350	4.5	3.5	2.9	2.2	1.8	1.5
400	4.9	3.8	3.1	2.4	2.0	1.7
450	5.4	4.1	3.4	2.6	2.1	1.8
500	5.7	4.4	3.6	2.8	2.3	2.0
550	6.1	4.7	3.9	2.9	2.4	2.1
600	6.5	4.9	4.1	3.1	2.6	2.2
650	6.8	5.2	4.3	3.3	2.7	2.3
700	7.2	5.5	4.5	3.5	2.9	2.5
750	7.5	5.7	4.7	3.6	3.0	2.6
800	7.9	6.0	4.9	3.8	3.1	2.7
850	8.2	6.2	5.2	3.9	3.2	2.8
900	8.5	6.5	5.4	4.1	3.4	2.9
950	8.8	6.7	5.5	4.2	3.5	3.0
1000	9.1	7.0	5.7	4.4	3.6	3.1
1100	9.7	7.4	6.1	4.7	3.9	3.3
1200	10.3	7.9	6.5	4.9	4.1	3.5
1300	10.9	8.3	6.8	5.2	4.3	3.7
1400	11.4	8.7	7.2	5.5	4.5	3.9
1500	11.9	9.1	7.5	5.7	4.7	4.1
1600	12.5	9.5	7.9	6.0	4.9	4.3
1700	13.0	9.9	8.2	6.2	5.2	4.4
1800	13.5	10.3	8.5	6.5	5.4	4.6
1900	14.0	10.7	8.8	6.7	5.5	4.8
2000	14.5	11.0	9.1	7.0	5.7	4.9
2100	14.9	11.4	9.4	7.2	5.9	5.1
2200	15.4	11.8	9.7	7.4	6.1	5.3
2300	15.9	12.1	10.0	7.6	6.3	5.4
2400	16.3	12.5	10.3	7.9	6.5	5.6
2500	16.8	12.8	10.6	8.1	6.7	5.7
2600	17.2	13.1	10.9	8.3	6.8	5.9
2700	17.7	13.5	11.1	8.5	7.0	6.0
2800	18.1	13.8	11.4	8.7	7.2	6.2
2900	18.5	14.1	11.7	8.9	7.4	6.3
3000	19.0	14.5	11.9	9.1	7.5	6.5
3100	19.4	14.8	12.2	9.3	7.7	6.6
3200	19.8	15.1	12.5	9.5	7.9	6.8
3300	20.2	15.4	12.7	9.7	8.0	6.9
3400	20.6	15.7	13.0	9.9	8.2	7.0
3500	21.0	16.0	13.2	10.1	8.3	7.2
3600	21.4	16.3	13.5	10.3	8.5	7.3
3700	21.8	16.6	13.7	10.5	8.7	7.5
3800	22.2	16.9	14.0	10.7	8.8	7.6
3900	22.6	17.2	14.2	10.9	9.0	7.7
4000	23.0	17.5	14.5	11.0	9.1	7.9
4100	23.3	17.8	14.7	11.2	9.3	8.0
4200	23.7	18.1	14.9	11.4	9.4	8.1
4300	24.1	18.4	15.2	11.6	9.6	8.2
4400	24.5	18.7	15.4	11.8	9.7	8.4
4500	24.8	19.0	15.6	11.9	9.9	8.5
4600	25.2	19.2	15.9	12.1	10.0	8.6
4700	25.6	19.5	16.1	12.3	10.1	8.7
4800	25.9	19.8	16.3	12.5	10.3	8.9
4900	26.3	20.1	16.6	12.6	10.4	9.0
5000	26.6	20.3	16.8	12.8	10.6	9.1

1 ft to 5 ft CIPOLLETTI Weirs with End Contractions

Flow in GPM vs. Head Height in Inches

Flow	1'	1.5'	2'	3'	4'	5'
5200	27.3	20.9	17.2	13.1	10.9	9.4
5400	28.0	21.4	17.7	13.5	11.1	9.6
5600	28.7	21.9	18.1	13.8	11.4	9.8
5800	29.4	22.4	18.5	14.1	11.7	10.1
6000	30.1	23.0	19.0	14.5	11.9	10.3
6200	30.8	23.5	19.4	14.8	12.2	10.5
6400	31.4	24.0	19.8	15.1	12.5	10.7
6600	32.1	24.5	20.2	15.4	12.7	11.0
6800	32.7	25.0	20.6	15.7	13.0	11.2
7000	33.3	25.4	21.0	16.0	13.2	11.4
7200	34.0	25.9	21.4	16.3	13.5	11.6
7400	34.6	26.4	21.8	16.6	13.7	11.8
7600	35.2	26.9	22.2	16.9	14.0	12.0
7800	35.8	27.3	22.6	17.2	14.2	12.3
8000	36.4	27.8	23.0	17.5	14.5	12.5
8200		28.3	23.3	17.8	14.7	12.7
8400		28.7	23.7	18.1	14.9	12.9
8600		29.2	24.1	18.4	15.2	13.1
8800		29.6	24.5	18.7	15.4	13.3
9000		30.1	24.8	19.0	15.6	13.5
9200		30.5	25.2	19.2	15.9	13.7
9400		31.0	25.6	19.5	16.1	13.9
9600		31.4	25.9	19.8	16.3	14.1
9800		31.8	26.3	20.1	16.6	14.3
10000		32.3	26.6	20.3	16.8	14.5
10200		32.7	27.0	20.6	17.0	14.7
10400		33.1	27.3	20.9	17.2	14.8
10600		33.6	27.7	21.1	17.4	15.0
10800		34.0	28.0	21.4	17.7	15.2
11000		34.4	28.4	21.7	17.9	15.4
11200		34.8	28.7	21.9	18.1	15.6
11400		35.2	29.1	22.2	18.3	15.8
11600		35.6	29.4	22.4	18.5	16.0
11800		36.0	29.8	22.7	18.7	16.2
12000		36.4	30.1	23.0	19.0	16.3
12200			30.4	23.2	19.2	16.5
12400			30.8	23.5	19.4	16.7
12600			31.1	23.7	19.6	16.9
12800			31.4	24.0	19.8	17.1
13000			31.7	24.2	20.0	17.2
13200			32.1	24.5	20.2	17.4
13400			32.4	24.7	20.4	17.6
13600			32.7	25.0	20.6	17.8
13800			33.0	25.2	20.8	17.9
14000			33.3	25.4	21.0	18.1
14200			33.7	25.7	21.2	18.3
14400			34.0	25.9	21.4	18.4
14600			34.3	26.2	21.6	18.6
14800			34.6	26.4	21.8	18.8
15000			34.9	26.6	22.0	19.0
15500			35.7	27.2	22.5	19.4
16000			36.4	27.8	23.0	19.8
16500				28.4	23.4	20.2
17000				29.0	23.9	20.6
17500				29.5	24.4	21.0
18000				30.1	24.8	21.4
18500				30.6	25.3	21.8
19000				31.2	25.7	22.2
19500				31.7	26.2	22.6
20000				32.3	26.6	23.0

Table 10

1 ft to 5 ft CIPOLLETTI Weirs with End Contractions

Flow in GPM vs. Head Height in Inches

Flow	1'	1.5'	2'	3'	4'	5'
20500				32.8	27.1	23.3
21000				33.3	27.5	23.7
21500				33.9	28.0	24.1
22000				34.4	28.4	24.5
22500				34.9	28.8	24.8
23000				35.4	29.2	25.2
23500				35.9	29.7	25.6
24000				36.4	30.1	25.9
24500					30.5	26.3
25000					30.9	26.6
25500					31.3	27.0
26000					31.7	27.3
26500					32.1	27.7
27000					32.5	28.0
27500					32.9	28.4
28000					33.3	28.7
28500					33.7	29.1
29000					34.1	29.4
29500					34.5	29.8
30000					34.9	30.1
30500					35.3	30.4
31000					35.7	30.8
31500					36.1	31.1
32000					36.4	31.4
32500						31.7
33000						32.1
33500						32.4
34000						32.7
34500						33.0
35000						33.3
35500						33.7
36000						34.0
36500						34.3
37000						34.6
37500						34.9
38000						35.2
38500						35.5
39000						35.8
39500						36.1
40000						36.4

Table 11

6 ft to 10 ft CIPOLLETTI Weirs with End Contractions

Flow	Flow in GPM vs. Head Height in Inches 6'	7'	8'	9'	10'
100	.6	.5	.5	.5	.4
200	.9	.9	.8	.7	.7
300	1.2	1.1	1.0	.9	.9
400	1.5	1.4	1.2	1.1	1.1
500	1.7	1.6	1.4	1.3	1.2
600	2.0	1.8	1.6	1.5	1.4
700	2.2	2.0	1.8	1.7	1.5
800	2.4	2.1	2.0	1.8	1.7
900	2.6	2.3	2.1	2.0	1.8
1000	2.8	2.5	2.3	2.1	2.0
1200	3.1	2.8	2.6	2.4	2.2
1400	3.5	3.1	2.9	2.6	2.5
1600	3.8	3.4	3.1	2.9	2.7
1800	4.1	3.7	3.4	3.1	2.9
2000	4.4	4.0	3.6	3.3	3.1
2200	4.7	4.2	3.9	3.6	3.3
2400	4.9	4.5	4.1	3.8	3.5
2600	5.2	4.7	4.3	4.0	3.7
2800	5.5	4.9	4.5	4.2	3.9
3000	5.7	5.2	4.7	4.4	4.1
3200	6.0	5.4	4.9	4.6	4.3
3400	6.2	5.6	5.2	4.8	4.4
3600	6.5	5.8	5.4	4.9	4.6
3800	6.7	6.1	5.5	5.1	4.8
4000	7.0	6.3	5.7	5.3	4.9
4200	7.2	6.5	5.9	5.5	5.1
4400	7.4	6.7	6.1	5.7	5.3
4600	7.6	6.9	6.3	5.8	5.4
4800	7.9	7.1	6.5	6.0	5.6
5000	8.1	7.3	6.7	6.2	5.7
5500	8.6	7.8	7.1	6.6	6.1
6000	9.1	8.2	7.5	7.0	6.5
6500	9.6	8.7	7.9	7.3	6.8
7000	10.1	9.1	8.3	7.7	7.2
7500	10.6	9.5	8.7	8.1	7.5
8000	11.0	10.0	9.1	8.4	7.9
8500	11.5	10.4	9.5	8.8	8.2
9000	11.9	10.8	9.9	9.1	8.5
9500	12.4	11.2	10.2	9.4	8.8
10000	12.8	11.6	10.6	9.8	9.1
10500	13.2	11.9	10.9	10.1	9.4
11000	13.6	12.3	11.3	10.4	9.7
11500	14.1	12.7	11.6	10.7	10.0
12000	14.5	13.1	11.9	11.0	10.3
12500	14.9	13.4	12.3	11.3	10.6
13000	15.3	13.8	12.6	11.6	10.9
13500	15.6	14.1	12.9	11.9	11.1
14000	16.0	14.5	13.2	12.2	11.4
14500	16.4	14.8	13.5	12.5	11.7
15000	16.8	15.1	13.9	12.8	11.9
15500	17.2	15.5	14.2	13.1	12.2
16000	17.5	15.8	14.5	13.4	12.5
16500	17.9	16.1	14.8	13.6	12.7
17000	18.2	16.5	15.1	13.9	13.0
17500	18.6	16.8	15.4	14.2	13.2
18000	19.0	17.1	15.6	14.5	13.5
18500	19.3	17.4	15.9	14.7	13.7
19000	19.6	17.7	16.2	15.0	14.0
19500	20.0	18.0	16.5	15.3	14.2
20000	20.3	18.3	16.8	15.5	14.5

6 ft to 10 ft CIPOLLETTI Weirs with End Contractions

Flow	Flow in GPM vs. Head Height in Inches 6'	7'	8'	9'	10'
20500	20.7	18.7	17.1	15.8	14.7
21000	21.0	19.0	17.3	16.0	14.9
21500	21.3	19.3	17.6	16.3	15.2
22000	21.7	19.6	17.9	16.5	15.4
22500	22.0	19.8	18.2	16.8	15.6
23000	22.3	20.1	18.4	17.0	15.9
23500	22.6	20.4	18.7	17.3	16.1
24000	23.0	20.7	19.0	17.5	16.3
24500	23.3	21.0	19.2	17.8	16.6
25000	23.6	21.3	19.5	18.0	16.8
25500	23.9	21.6	19.7	18.2	17.0
26000	24.2	21.9	20.0	18.5	17.2
26500	24.5	22.1	20.2	18.7	17.4
27000	24.8	22.4	20.5	19.0	17.7
27500	25.1	22.7	20.8	19.2	17.9
28000	25.4	23.0	21.0	19.4	18.1
28500	25.7	23.2	21.3	19.6	18.3
29000	26.0	23.5	21.5	19.9	18.5
29500	26.3	23.8	21.7	20.1	18.7
30000	26.6	24.0	22.0	20.3	19.0
30500	26.9	24.3	22.2	20.6	19.2
31000	27.2	24.6	22.5	20.8	19.4
31500	27.5	24.8	22.7	21.0	19.6
32000	27.8	25.1	23.0	21.2	19.8
32500	28.1	25.4	23.2	21.4	20.0
33000	28.4	25.6	23.4	21.7	20.2
33500	28.7	25.9	23.7	21.9	20.4
34000	29.0	26.1	23.9	22.1	20.6
34500	29.2	26.4	24.1	22.3	20.8
35000	29.5	26.6	24.4	22.5	21.0
35500	29.8	26.9	24.6	22.7	21.2
36000	30.1	27.1	24.8	23.0	21.4
36500	30.4	27.4	25.1	23.2	21.6
37000	30.6	27.6	25.3	23.4	21.8
37500	30.9	27.9	25.5	23.6	22.0
38000	31.2	28.1	25.7	23.8	22.2
38500	31.5	28.4	26.0	24.0	22.4
39000	31.7	28.6	26.2	24.2	22.6
39500	32.0	28.9	26.4	24.4	22.8
40000	32.3	29.1	26.6	24.6	23.0
40500	32.5	29.4	26.9	24.8	23.2
41000	32.8	29.6	27.1	25.0	23.3
41500	33.1	29.8	27.3	25.2	23.5
42000	33.3	30.1	27.5	25.4	23.7
42500	33.6	30.3	27.7	25.6	23.9
43000	33.9	30.6	28.0	25.8	24.1
43500	34.1	30.8	28.2	26.0	24.3
44000	34.4	31.0	28.4	26.2	24.5
44500	34.7	31.3	28.6	26.4	24.7
45000	34.9	31.5	28.8	26.6	24.8
45500	35.2	31.7	29.0	26.8	25.0
46000	35.4	32.0	29.2	27.0	25.2
46500	35.7	32.2	29.5	27.2	25.4
47000	35.9	32.4	29.7	27.4	25.6
47500	36.2	32.7	29.9	27.6	25.7
48000		32.9	30.1	27.8	25.9
48500		33.1	30.3	28.0	26.1
49000		33.3	30.5	28.2	26.3
49500		33.6	30.7	28.4	26.5
50000		33.8	30.9	28.6	26.6

Table 11

6 ft to 10 ft CIPOLLETTI Weirs with End Contractions

Flow	Flow in GPM vs. Head Height in Inches 6'	7'	8'	9'	10'
51000		34.2	31.3	29.0	27.0
52000		34.7	31.7	29.3	27.3
53000		35.1	32.1	29.7	27.7
54000		35.6	32.5	30.1	28.0
55000		36.0	32.9	30.5	28.4
56000		36.4	33.3	30.8	28.7
57000			33.7	31.2	29.1
58000			34.1	31.6	29.4
59000			34.5	31.9	29.8
60000			34.9	32.3	30.1
61000			35.3	32.6	30.4
62000			35.7	33.0	30.8
63000			36.1	33.3	31.1
64000			36.4	33.7	31.4
65000				34.0	31.7
66000				34.4	32.1
67000				34.7	32.4
68000				35.1	32.7
69000				35.4	33.0
70000				35.8	33.3
71000				36.1	33.7
72000				36.4	34.0
73000					34.3
74000					34.6
75000					34.9
76000					35.2
77000					35.5
78000					35.8
79000					36.1
80000					36.4

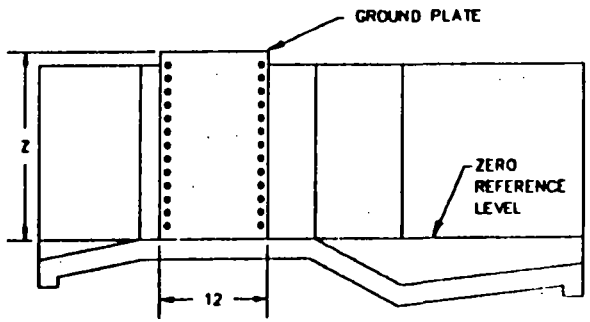

VIEW A-A
FIGURE 1
GROUND PLATE ORIENTATION

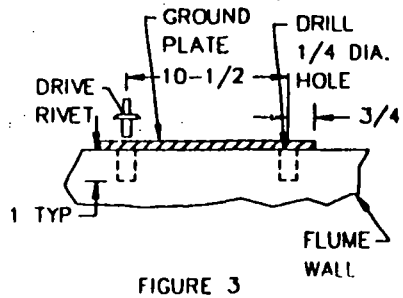

FIGURE 3
GROUND PLATE
INSTALLATION

FLUME SIZE W	A	2A/3	X	Y	Z	GROUND PLATE
1	14-1/4	9-1/2	3-1/2	-	12	290-1000-007
2	16-1/4	10-7/8	5	-	12	290-1000-007
3	18-3/8	12-1/4	6	-	26	290-1000-009
6	24-7/16	16-5/16	10	-	26	290-1000-009
9	34-5/8	23-1/8	17	-	32	290-1000-010
12	54	36	30	-	38	290-1000-011
18	57	38	-	4	38	290-1000-011
24	60	40	-	4	38	290-1000-011
36	66	44	-	4	38	290-1000-011
48	72	48	-	4	38	290-1000-011
60	78	52	-	4	38	290-1000-011
72	84	56	-	4	38	290-1000-011
84	90	60	-	4	38	290-1000-011
96	96	64	-	4	38	290-1000-011
ALL DIMENSIONS ARE IN INCHES						

TABLE 1
SENSING ELEMENT AND GROUND PLATE
LOCATION DIMENSIONS

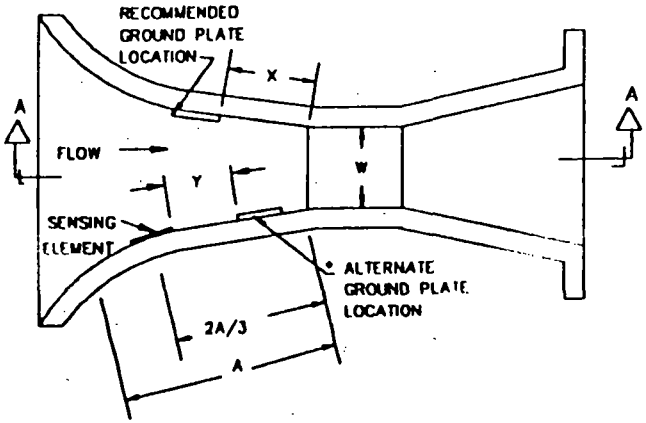

FIGURE 2
SENSING ELEMENT
AND GROUND PLATE LOCATION

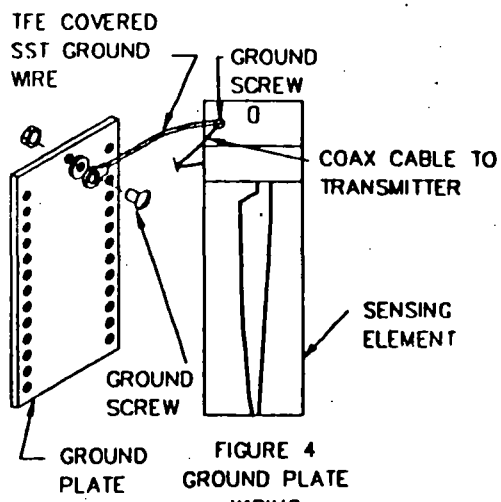

FIGURE 4
GROUND PLATE
WIRING

* ALTERNATE GROUND PLATE LOCATION IS USED ON FLUMES HAVING THROAT WIDTHS 18" INCHES OR LARGER.

GROUND PLATE INSTALLATION

1. DETERMINE GROUND PLATE LOCATION AND ORIENTATION FROM TABLE 1 AND FIGURES 1 AND 2.
2. USING GROUND PLATE AS A TEMPLATE, DRILL 1/4" DIA. HOLES APPROXIMATELY 1" DEEP AND DRIVE PIN FLUSH WITH RIVET HEAD. SEE FIGURE 3.

GROUND PLATE WIRING

1. ATTACH TFE COVERED STAINLESS STEEL GROUND WIRE BETWEEN GROUND SCREWS ON GROUND PLATE AND SENSING ELEMENT. SEE FIGURE 4.

CERTIFIED by
PO #
ENG
USER

ISS.	EDO/DSR NO.	APP'D	DATE
3	6-93-168	[illegible]	7-16-93
2	3-89-245	H.HSU	3-30-89
1	8-87-241	JRB	8-87

COPYRIGHT 1993
DREXELBROOK ENG CO.

SCALE NONE
UNLESS OTHERWISE STATED ALL DIMENSIONS IN INCHES (MM)
DR. AJK
CK. VCT3

DREXELBROOK
Engineering Company
205 KEITH VALLEY RD
HORSHAM, PA 19044-9986
215-674-1234
FAX 215-674-2731

MOUNTING AND WIRING OF OPEN CHANNEL FLOW GROUND PLATES IN PARSHALL FLUMES

290-1000-XXX-CD
SHT. 1 of 4
ISS. 3

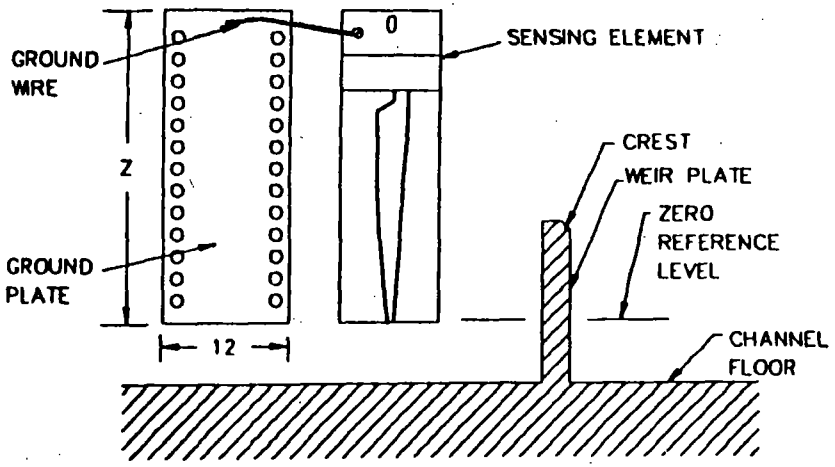

FIGURE 1
GROUND PLATE ORIENTATION

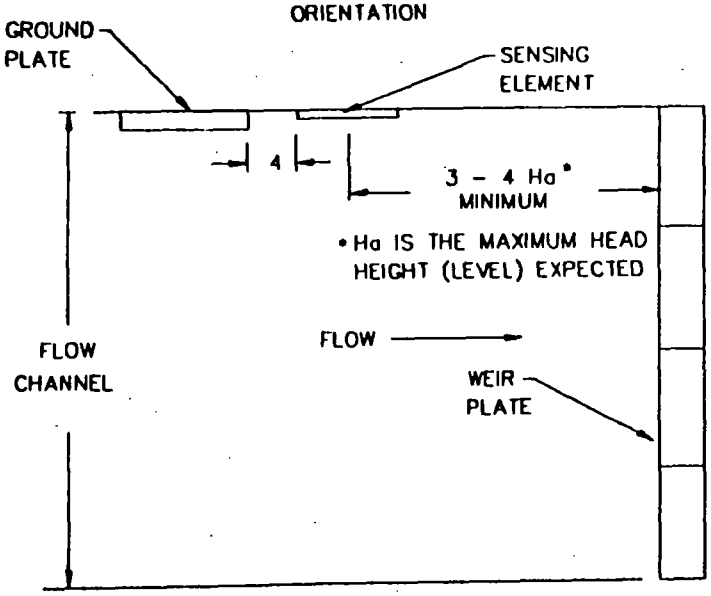

FIGURE 2
SENSING ELEMENT AND GROUND PLATE LOCATION

SENSING ELEMENT MODEL NO.	INSERTION LENGTH	SPAN RANGE MIN.	SPAN RANGE MAX	Z	GROUND PLATE
700-703-331	12	3.3	10	12	290-1000-007
700-703-332	12	1.7	5	12	290-1000-007
700-703-333	26	7	20	26	290-1000-009
700-703-334	26	3.3	11	26	290-1000-009
700-703-335	38	12	36	38	290-1000-011
700-703-336	38	5.3	16	38	290-1000-011

GROUND PLATE INSTALLATION

1. DETERMINE GROUND PLATE LOCATION AND ORIENTATION FROM FIGURES 1 AND 2.
2. USING GROUND PLATE AS A TEMPLATE, DRILL 1/4" DIA. HOLES APPROXIMATELY 1" DEEP AND DRIVE PIN FLUSH WITH RIVET HEAD. (SEE FIGURE 4).

GROUND PLATE WIRING

1. ATTACH TFE COVERED STAINLESS STEEL GROUND WIRE BETWEEN GROUND SCREWS ON GROUND PLATE AND SENSING ELEMENT. (SEE FIGURE 3)

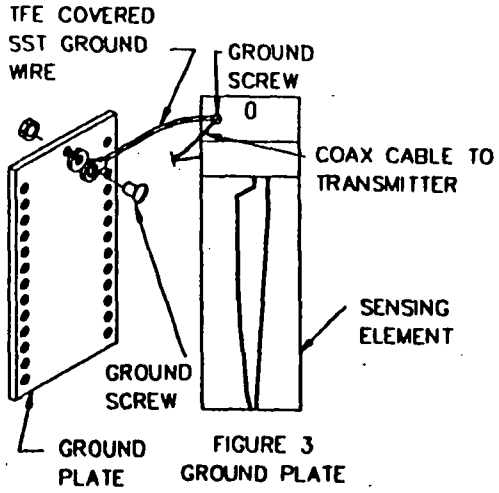

FIGURE 3
GROUND PLATE WIRING

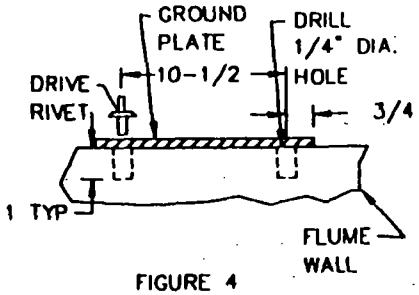

FIGURE 4
GROUND PLATE INSTALLATION

ISS.	EDO/DSR NO.	APP'D	DATE
3	6-93-168	[illegible]	7-16-93
2	3-89-245	H.HSU	3-30-89
1	8-87-241	JRB	8-87

CERTIFIED by
PO #
ENG
USER
DE #

COPYRIGHT 1993
DREXELBROOK ENG CO.

SCALE NONE
UNLESS OTHERWISE STATED ALL DIMENSIONS IN INCHES (MM)
DR. AJK
CK. WCB

DREXELBROOK
Engineering Company
KEITH VALLEY RD
M, PA 19044-9986
215-674-1234
FAX 215-674-2731

MOUNTING AND WIRING
OPEN CHANNEL FLOW GROUND PLATES IN WEIRS

290-1000-XXX-

SHT. 2 OF 4
ISS. 3

440-115-184 (2)
NO. 290-1000-XXX-CD SHT 2 OF 4

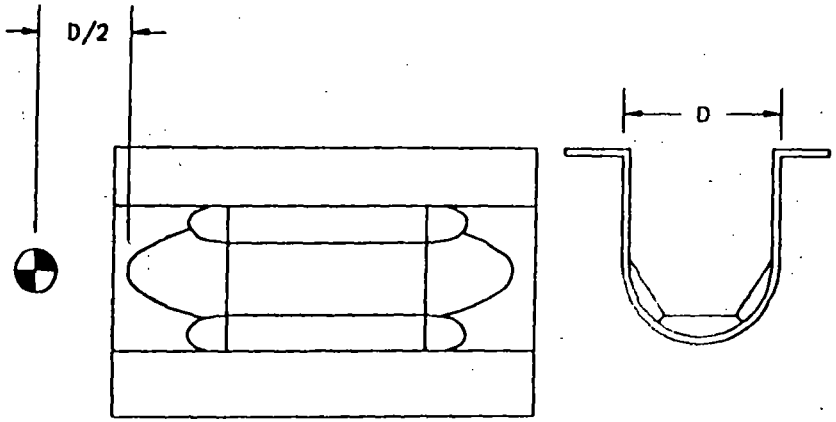

FIGURE 1 – PALMER BOWLUS INSERT (TYPICAL)

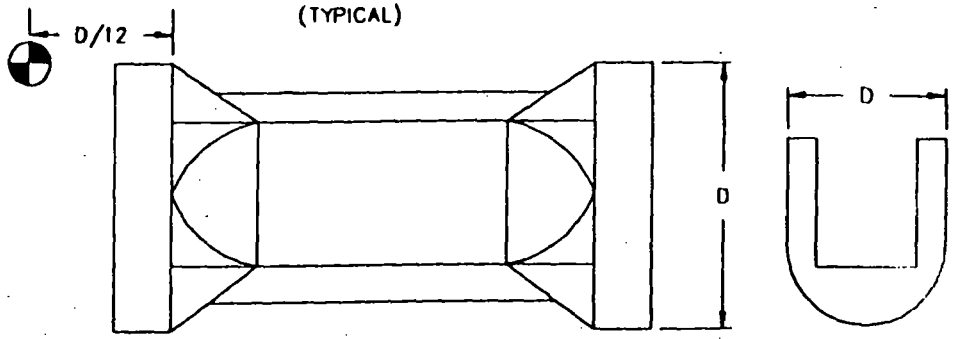

FIGURE 2 – LEOPOLD LAGCO INSERT (TYPICAL)

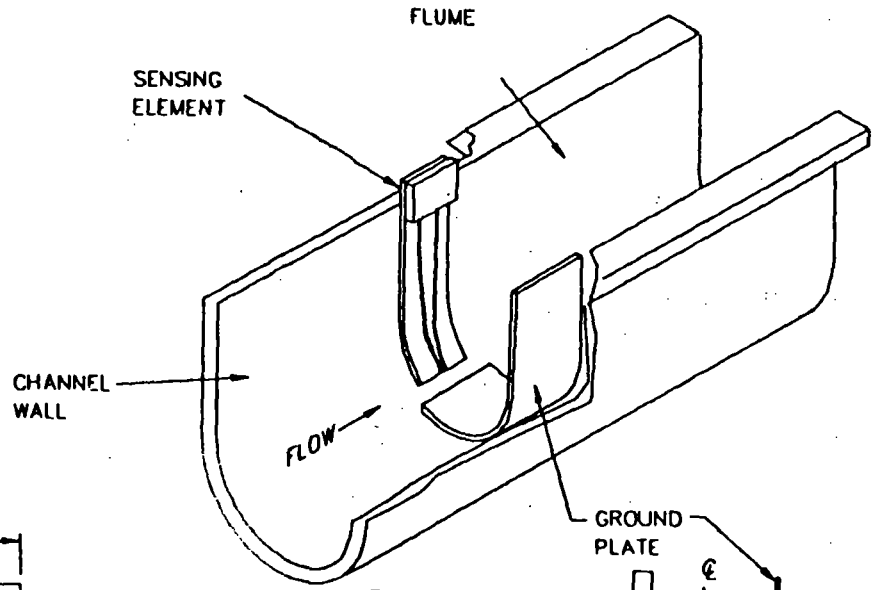

FIGURE 3

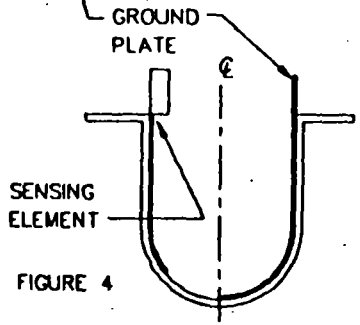

FIGURE 4

NOTES:

1. GROUND PLATE INSTALLATION

PALMER BOWLUS – SENSING ELEMENT SHOULD BE LOCATED ONE-HALF D (DIAMETER OF PIPE/WIDTH OF CHANNEL) UPSTREAM FROM THE END OF THE THROAT SECTION. THIS LOCATION IS NOT CRITICAL AS LONG AS THE SENSING ELEMENT IS LOCATED ABOVE THE UPPER TRANSITION SECTION IN AN AREA WHERE THE DEPTH OF FLOW DOES NOT CHANGE SIGNIFICANTLY WITHIN A RANGE OF ONE PIPE DIAMETER. (FIGURE 1)

LEOPOLD LAGCO – SENSING ELEMENT SHOULD BE LOCATED A MINIMUM OF 1/12 OF PIPE DIAMETER UPSTREAM OF CONVERGING SECTION OR A MINIMUM OF 1 INCH UPSTREAM OF CONVERGING SECTION (FIGURE 2)

- LOCATE GROUND PLATE ON OPPOSITE SIDE FROM SENSING ELEMENT MAKING SURE THAT BOTTOM EDGE CONFORMS TO CURVATURE OF FLUME/CHANNEL AND EXTENDS TO CENTERLINE ℄ REFERENCE. (FIGURES 3 AND 4)
- USING GROUND PLATE AS A TEMPLATE, DRILL 1/4" DIA. HOLES APPROXIMATELY 1" DEEP AND DRIVE PIN FLUSH WITH RIVET HEAD (FIGURE 6)

GROUND PLATE WIRING

- ATTACH TFE COVERED STAINLESS STEEL GROUND WIRE BETWEEN GROUND SCREWS ON GROUND PLATE AND SENSING ELEMENT (FIGURE 7)

3	6-93-168	WMW	7-15-93	
2	3-89-245	H.HSU	3-30-89	

CERTIFIED by_____
PO # _____
ENG _____
USER _____

COPYRIGHT 1993
DREXELBROOK ENG CO.

SCALE NONE
UNLESS OTHERWISE STATED ALL DIMENSIONS IN INCHES (MM)

DREXELBROOK
Engineering Company

MOUNTING AND WIRING OF OPEN CHANNEL FLOW GROUND PLATES IN PALMER BOWLUS AND LEOPOLD LAGCO FLUMES

440-115-184 (2)

NO. 290-1000-XXX-CD SHT 3 OF

PUT 3 ISS

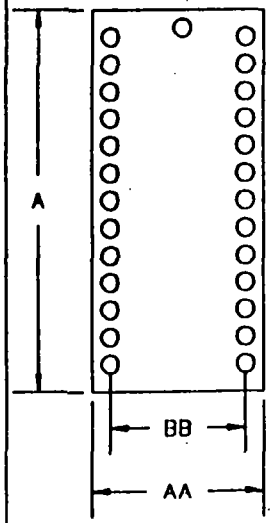

FIGURE 5
GROUND PLATE
(SEE TABLE 1)

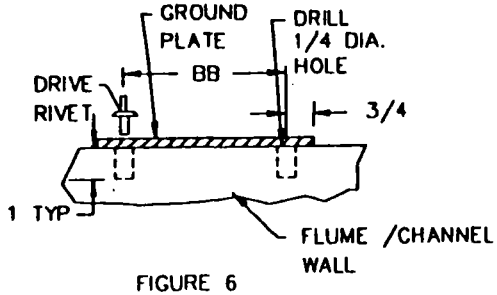

FIGURE 6
GROUND PLATE
INSTALLATION

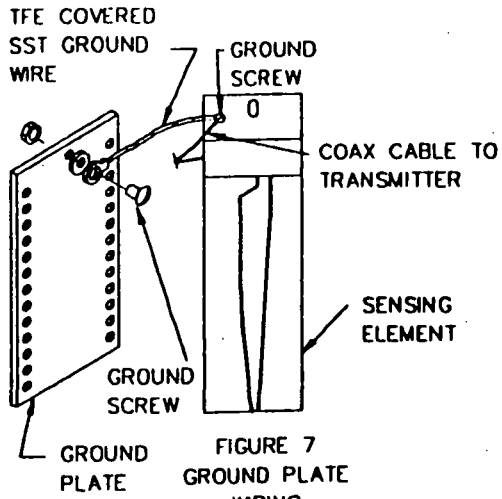

FIGURE 7
GROUND PLATE
WIRING

FLUME DIA. INCHES	A INCHES	AA INCHES	BB INCHES	GROUND PLATE
4	6	4	2-1/2	290-1000-50
6	8	6	4-1/2	290-1000-51
8	11	6	4-1/2	290-1000-52
10	13	6	4-/12	290-1000-53
12	16	6	4-1/2	290-1000-54
15	20	6	4-1/2	290-1000-55
18	24	12	10-1/2	290-1000-57
20	26	12	10-1/2	290-1000-58
21	28	12	10-1/2	290-1000-59
24	32	12	10-1/2	290-1000-60
27	36	12	10-1/2	290-1000-61
30	39	12	10-1/2	290-1000-62
36	47	12	10-1/2	290-1000-63
42	55	12	10-1/2	290-1000-64
48	62	12	10-1/2	290-1000-65
54	72	12	10-1/2	290-1000-66
60	78	12	10-1/2	290-1000-67
66	86	12	10-1/2	290-1000-68
72	94	12	10-1/2	290-1000-69

TABLE 1
GROUND PLATE DIMENSIONS

NOTE:
FOR GROUND PLATE
MOUNTING DETAILS
SEE SHEET 2

CERTIFIED by
PO #
ENG
USER
DE #

ISS.	EDO/DSR NO.	APP'D	DATE
3	6-93-168	[illegible]	7-16-93
2	3-89-245	H.HSU	3-30-89
1	8-87-241	JRB	8-87

COPYRIGHT 1993
DREXELBROOK ENG CO.

SCALE NONE
UNLESS OTHERWISE STATED ALL DIMENSIONS IN INCHES (MM)
DR. AJK
CK. WCB

DREXELBROOK
Engineering Company
205 KEITH VALLEY RD
'ORSHAM, PA 19044-9986
215-674-1234
FAX 215-674-2731

MOUNTING AND WIRING OF
OPEN CHANNEL FLOW GROUND PLATES
IN PALMER-BOWLUS AND
LEOPOLD LAGCO FLUMES

290-1000-XXX-CD SHT. 4 OF 4 ISS. 3

440-115-184 (2)

NO. 290-1000-AAA-CD SHT 4 OF 4

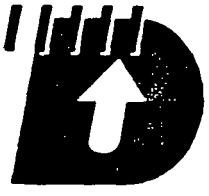

DREXELBROOK

Engineering Company

SECTION 7

INSTALLATION, OPERATION AND MAINTENANCE MANUAL

ROSEDALE PRODUCTS, INC.

MODEL 8

150 PSIG RATED FILTER UNIT

NORTHERN STATES FILTRATION CO.
228 SOUTH CEDAR LAKE ROAD
MINNEAPOLIS, MN 55405-2006
PHONE: (612) 377-1100

Table of Contents

I. Installation 2

II. Operation 3

III. Spare Parts List 4

IV. Spare Parts Diagram 5

Rosedale Engineering Standards are the property of Rosedale Products, Inc. A Rosedale standard or copy thereof shall not be distributed (except with express approval of Rosedale Products, Inc.) to any individual or firm beyond the intended recipient firm or individual. Firms of individuals acting contrary to the above may be subject to suit, ineligibility for continued or future employment, or removal from Rosedale's "Approved Manufacturers and Specialty Contractors List".

I. Installation

Please remove all shipping and crating materials carefully. Be sure to remove the plugs from the inlet and outlet openings. Dispose of all crating materials safely.

The Model 8 Filter unit is capable of having several different piping variations based upon the outlet style of your unit. The inlet service line should be connected to the inlet flange or NPT coupling located near the top of the unit (above the basket level).

The outlet service line should be connected to the outlet flange or coupling, located near the middle or bottom of the unit depending upon the style of your unit (below basket level).

There are two 1/4" NPT ports on the shell and one 1/4" NPT port on the cover of the Model 8 Filter unit. These ports can remain plugged or used for pressure gauges or special fittings as your application requires.

Some installations require electrical grounding of all equipment, be sure to provide adequate grounding where necessary.

After completing installation be sure to double check connections for integrity. Your Model 8 Filter unit has been factory pressure tested leak free, therefore, any seepage problems usually occur from improper installation connections.

You are now ready to install the filter basket and bag. Remove cover by loosening the cover eyenuts. The eyenuts in the slotted corners should be loosened sufficiently to swing free. Loosen the third eyenut sufficiently to allow the top cover and closure assembly to swing away from the top of the unit.

If your application requires a basket seal, insert the basket seal into the basket collar groove. Refer to Figure 1 or Figure 2 in the Spare Parts Diagram for installation position of your seal.

Place the basket into the filter housing, make sure the basket flange is firmly seated into the basket collar.

Insert bag into the bag basket making sure filter bag ring is firmly seated inside the basket flange. For best results, be sure filter bag is installed fully extended to the bottom of the basket.

Before replacing cover assembly, inspect cover seal gasket (replacing as necessary). Close cover and alternately tighten the three clamp assemblies evenly to ensure a leak proof seal between the cover and housing body. The recommended torque value for 5/8"-11 closure assemblies is 150$^{inch\text{-}lbs}$.

Your Rosedale Model 8 is now ready for operation!

Rosedale Engineering Standards are the property of Rosedale Products, Inc. A Rosedale standard or copy thereof shall not be distributed (except with express approval of Rosedale Products, Inc.) to any individual or firm beyond the intended recipient firm or individual. Firms of individuals acting contrary to the above may be subject to suit, ineligibility for continued or future employment, or removal from Rosedale's "Approved Manufacturers and Specialty Contractors List".

II. Operation

Filter System Start-Up Procedure:

Prior to turning on the flow to the inlet service, please make the following checks:

1. Check inside filter unit to be sure basket and filter bag (if applicable) are in housing and do not require cleaning or replacement. If necessary install a clean filter basket and bag (if applicable).

2. Check that filter unit cover is securely fastened to housing. You are now ready to open the flow to the inlet service line. Slowly open the inlet service line approximately 25% of normal operational flow (open slowly as not to displace filter bag inside the housing). After filter unit is pressurized and vented, slowly open outlet service line unit valve until completely open. Complete opening of inlet service line until desired flow rate is reached.

Once the desired service flow has been established, the filter will operate efficiently until dirty. However, under no circumstances should more than *15 PSI Differential Pressure* through the filter be obtained. Operating the filter unit with a high differential may cause filter bags to rupture and/or cause damage to filter system and downstream equipment.

To prevent excessive drop through the filter unit, regular inspection of the filter media is required. Monitoring of differential pressure through the housing can be utilized as a means of determining whether or not the filter media needs cleaning or replacement.

When it becomes necessary to clean or replace filter media, follow the procedure outlined below:

1. First close the flow from the inlet service line.
2. Close the flow to the outlet service line. (In some applications closing flow to outlet is not required.)
3. Relieve the pressure from the filter unit.

⚠ WARNING

CONTENTS UNDER PRESSURE
Relieve Pressure in accordance with Manufacturer's Instructions before opening Filter Vessel.
FAILURE TO DO SO MAY RESULT IN SERIOUS BODILY INJURY.

4. Drain housing sufficiently to access filter basket.
5. Remove cover by loosening the cover eyenuts. The eyenuts in the slotted corners should be loosened sufficiently to swing free. Loosen the third eyenut sufficiently to allow the top cover and closure assembly to swing away from the top of the unit.
6. Remove filter basket and clean thoroughly, remove the filter bag (if applicable) and throw

Rosedale Engineering Standards are the property of Rosedale Products, Inc. A Rosedale standard or copy thereof shall not be distributed (except with express approval of Rosedale Products, Inc.) to any individual or firm beyond the intended recipient, firm or individual. Firms of individuals acting contrary to the above may be subject to suit, ineligibility for continued or future employment, or removal from Rosedale's "Approved Manufacturers and Specialty Contractors List".

away. (Cleaning and reusing the filter bag is not recommended.)

7. Remove debris and sludge from inside the inlet portion of housing to avoid interference with cover seal or flow of fluid being filtered.
8. Remove basket seal and inspect, replace if necessary. Clean basket seal groove and replace basket seal (see spare parts diagram for location of basket seal).
9. Install clean filter basket and filter bag (if applicable). Place the basket into the filter housing, make sure the basket flange is firmly seated into the basket collar. If applicable, insert bag into the bag basket making sure filter bag ring is firmly seated inside the basket flange. For best results, be sure filter bag is installed fully extended to the bottom of the basket.
10. Inspect cover gasket for cuts or other signs of failure and make sure it is properly seated.
11. Move cover back into position, and alternately tighten the three clamp assemblies evenly to ensure a leak proof seal between cover and housing body. The recommended torque value for 5/8"-11 closure assemblies is 150$^{inch\text{-}lbs}$.

Your Rosedale Model 8 Filter unit is now ready for operation. Refer to filter system start-up procedure.

III. Spare Parts List

Your Rosedale Model 8 Filter unit will give you many years of reliable service provided periodic inspections are made of various components and replacement of worn parts are made promptly. The following is meant to be a recommended spare parts list, these parts are illustrated on the following page.

SPARE PARTS LIST

Balloon	Description	Part Number	Time-Frame
1	Cover Seal	8150CG-*	as needed
2	Basket Seal	8BG-*	as needed
3	Cover	8*150	as needed
4	Eye Nut	8ENNI	as needed
5	Rod End	8RENI	as needed
6	Clevis Pin Assembly	8CPNI	as needed
7	Filter Bag	(See Order)	as needed
8	Filter Basket	(See Order)	as needed
9	Tripod Legs	8T22*S	as needed

* Select Material Designation:

C = Carbon Steel
S = 304 Stainless Steel
S316 = 316 Stainless Steel

B = Buna N
E = Ethylene Propylene
V = Viton
TEV = Teflon Encapsulated Viton
TSW = Teflon Solid White

Rosedale Engineering Standards are the property of Rosedale Products, Inc. A Rosedale standard or copy thereof shall not be distributed (except with express approval of Rosedale Products, Inc.) to any individual or firm [illegible] recipient firm or individual. Firms of individuals acting contrary to the above may be subject to suit, ineligibility for continued or future employment, or removal from Rosedale's "Approved Manufacturers and Specialty Contractors List".

IV. Spare Parts Diagram

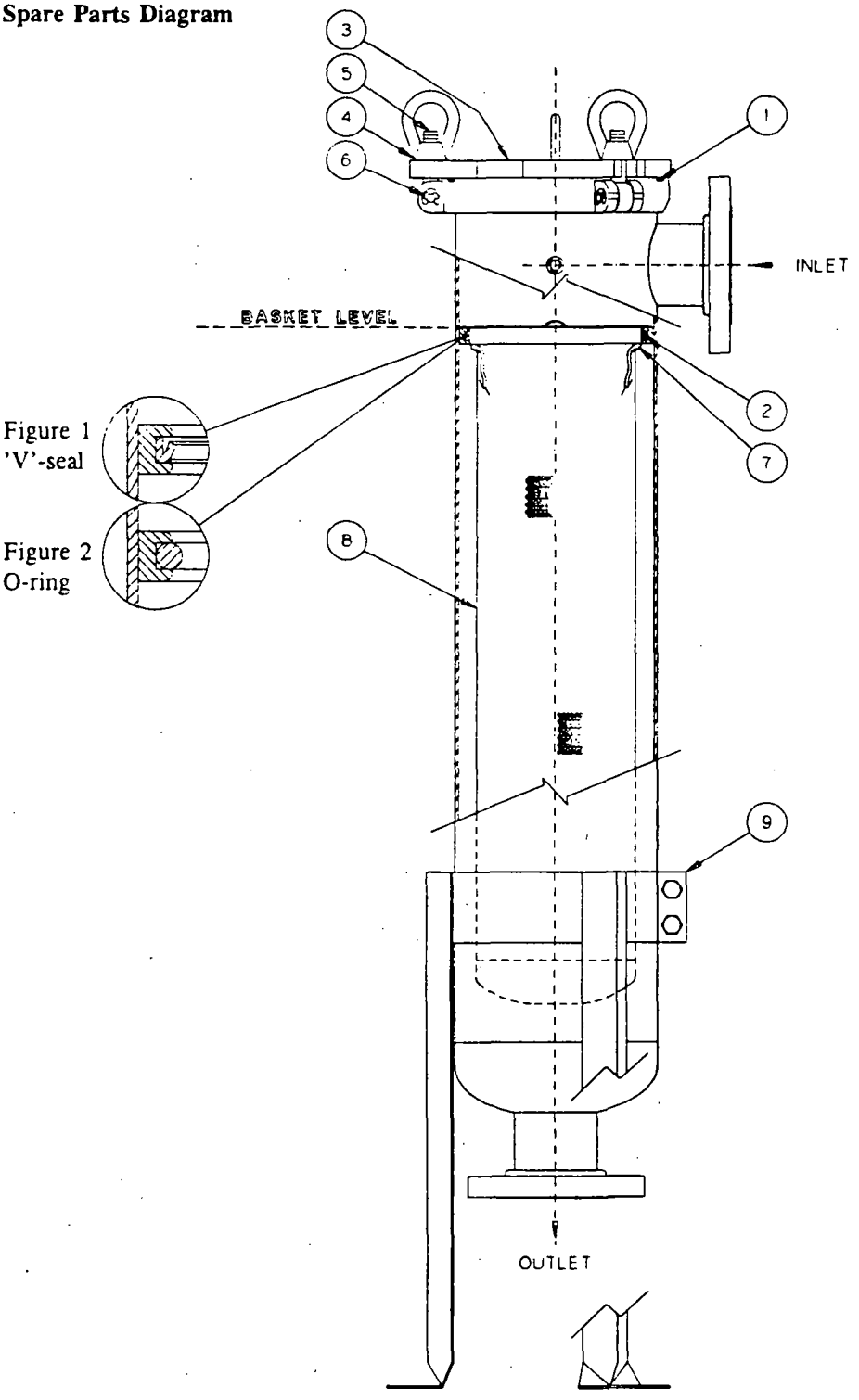

Figure 1
'V'-seal

Figure 2
O-ring

Rosedale Engineering Standards are the property of Rosedale Products, Inc. A Rosedale standard or copy thereof shall not be distributed (except with express approval of Rosedale Products, Inc.) to any individual or firm beyond the intended recipient firm or individual. Firms of individuals acting contrary to the above may be subject to suit, ineligibility for continued or future employment, or removal from Rosedale's "Approved Manufacturers and Specialty Contractors List".

Important Notice

Warranty: In the event any Rosedale Products, Inc. filtration product is found to be defective in material, workmanship, or not in conformance with any express warranty for a specific purpose, Rosedale's only obligation and your exclusive remedy, shall be to repair, replace or refund the purchase price of such parts or products upon timely notification thereof and substantiation that the product has been stored, maintained and used in accordance with Rosedale's written instructions.

EXCLUSIONS TO WARRANTY: **THIS WARRANTY IS EXCLUSIVE AND IS IN LIEU OF ANY IMPLIED WARRANTY OF MERCHANTABILITY, FITNESS FOR A PARTICULAR PURPOSE OR OTHER WARRANTY OF QUALITY, EXCEPT OF TITLE AND AGAINST PATENT INFRINGEMENT.**

LIMITATION OF LIABILITY: Except as provided above, Rosedale shall not be liable or responsible for any loss or damage, whether direct, indirect, incidental, special or consequential, arising out of sale, use or misuse of Rosedale filtration products, or the user's inability to use such products.

THE REMEDIES SET FORTH HEREIN ARE EXCLUSIVE.

Rosedale Products, Inc.
3730 West Liberty Road
Ann Arbor, MI 48103 USA
313-665-8201
800-821-5373
Fax. 313-665-2214
Filters@mcimail.com
http://www.webcom.com/~filters/

Rosedale Engineering Standards are the property of Rosedale Products, Inc. A Rosedale standard or copy thereof shall not be distributed (except with express approval of Rosedale Products, Inc.) to any individual or firm, beyond the intended recipient firm or individual. Firms or individuals acting contrary to the above may be subject to suit, ineligibility for continued or future employment, or removal from Rosedale's "Approved Manufacturers and Specialty Contractors List".

SEALS

Buna or EPR seals are included in housing price. Only add if using Viton or Teflon.
Also use this chart when ordering replacements.

Material	Cover Seal Part No.	Cover Seal Price	Strainer Seal Part No.	Strainer Seal Price
B[illegible]N	8150CG-B	[illegible].00	[illegible]G-B	$13.00
Ethylene Propylene	[illegible]	[illegible]	[illegible]	[illegible]
Food Grade Material	8150CG-FG*	38.00	8BG-FG**	29.00
Viton	8150CG-V	33.00	8BG-V	~~68.00~~ 54.00
Teflon Encapsulated Viton	8150CG-TEV	60.00	8BG-TEV	58.00
Teflon (Solid White) (150 psi only)	8150CG-TSW	62.00	8BG-TSW	84.00

* NSF 61 certified EPDM
** NSF 61 certified Santoprene

NORTHERN STATES FILTRATION CO.
228 SOUTH CEDAR LAKE ROAD
MINNEAPOLIS, MN 55405-2006
PHONE: (612) 377-1100

MODEL 8 OPTIONS

Add prices of desired options to base price.

ASME CODE STAMP ("C" OPTION)
(150 psi only) $214.00

	BASKET DEPTHS 15"	30"
LIQUID DISPLACER ("D" OPTION) Made of 316 stainless steel fixed to cover. (Can be removed)	$ 134.00	$ 161.00
PERFORATED STRAINER BASKET ("P" STYLE BASKETS) 1/16", 3/32", 9/64", 3/16",or 1/4" diameter openings	$ 87.00	$ 109.00
WIRE MESH LINED PERFORATED STRAINER BASKETS ("M" & "BM" STYLE BASKETS)		
Mesh size 20, 30, 40, 50, 60, 70, 80 or 100	$ 119.00	$ 227.00
Mesh size 150 or 200	187.00	351.00

LIQUID DISPLACER-LOOSE

Material	Part No.	Basket Depth	Pric
316 Stainless Steel	815 Float	15"	$134.(
316 Stainless Steel	830 Float	30"	161.(

FILTER BAG HOLD DOWN SPRING (100 psi only)

Material	Part No.	Pric
304 Stainless Steel	8HDS	$80.(

ADDER FOR INDICATOR OPTION Pric $565.(

REPLACEMENT PARTS

BASKETS (Made of 304 Stainless Steel)			BASKET DEPTHS 15" Part No.	15" Price	30" Part No.	30" Price
Style "P"	Perforated strainer basket: 1/16", 3/32", "9/64", 3/16," or 1/4" dia. openings	OUTER	O-715-P*	$278.00	O-730-P*	$379.00
		INNER	I-715-P*	278.00	I-730-P*	379.00
Style "PB"	Pleated bag basket, with standard 9/64" dia. perforations:	OUTER	O-715-PB	192.00	O-730-PB	270.00
		INNER	N/A		N/A	
Style "M"	Mesh-lined perforated strainer basket **Specify mesh size 20, 30, 40, 50, 60, 70, 80 or 100	OUTER	O-715-M**	310.00	O-730-M**	496.00
		INNER	I-715-M**	310.00	I-730-M**	496.00
	***Mesh size 150 or 200	OUTER	O-715-M***	379.00	O-730-M***	621.00
		INNER	I-715-M***	379.00	I-730-M***	621.00
Style "B"	Filter bag basket, with standard 9/64" dia. perforations:	OUTER	O-715-B	192.00	O-730-B	270.00
		INNER	I-715-B	192.00	I-730-B	270.00
Style "BM"	Mesh-lined filter bag basket **Mesh size 20, 30, 40, 50, 60, 70, 80 or 100	OUTER	O-715-BM**	310.00	O-730-BM**	496.00
		INNER	I-715-BM**	310.00	I-730-BM**	496.00
	***Mesh size 150 or 200	OUTER	O-715-BM***	379.00	O-730-BM***	621.00
		INNER	I-715-BM***	379.00	I-730-BM***	621.00

LIQUID DISPLACER & COVER
[illegible] mounted to a replacement cover. They can be detached to use as floats.)

	BASKET DEPTHS 15" Part No.	15" Price	30" Part No.	30" Price
On carbon steel 150 psi cover	LD150-15-C	273.00	LD150-30-C	300.00
On stainless steel 150 psi cover	LD150-15-S	494.00	LD150-30-S	521.00

22" TRIPOD LEG ASSEMBLY

Material	Part No.	Price
Carbon Steel	8T22CS	$ 40.00
Stainless Steel	8T22SS	90.00

150 PSI HOUSINGS

Rod end	8RENI	$17.00
Eye nut	8ENNI	21.00
Clevis pin assembly	8CPNI	9.00

COVERS

	Part No.	Pric
150 psi carbon steel cover	8C150-C	$ 139.0
150 psi stainless steel cover	8C150-S	360.0

SECTION 8

INSTRUCTION MANUAL

3700FR/3720 Refrigerated Sampler

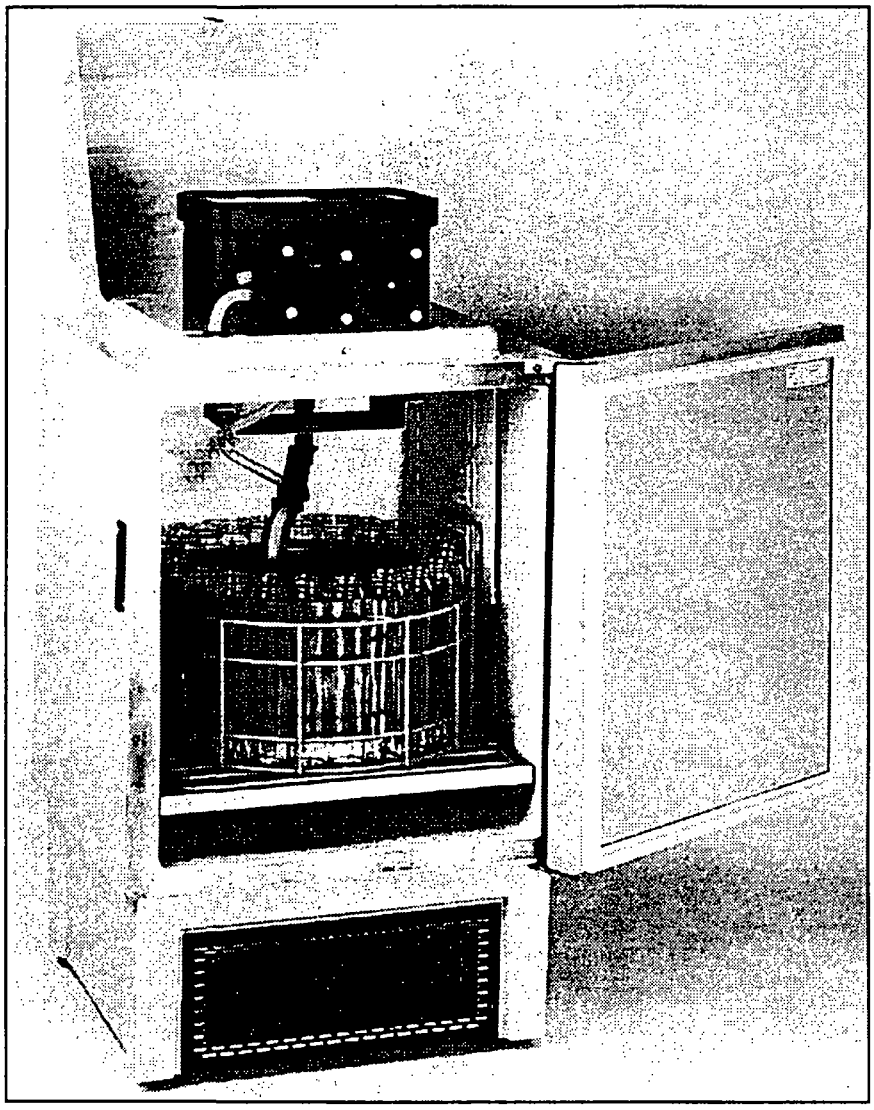

Part #60-3704-104

Copyright © 1996

Issued: October 24, 1996
Revision:

531 Westgate Boulevard
Lincoln, Nebraska, 68528-1586 USA
Phone: (402) 474-2233
Toll Free: (800) 228-4373 (USA & Canada).
FAX: (402) 474-6685

ISCO®

FOREWORD

This instruction manual is designed to help you gain a thorough understanding of the operation of the equipment. Isco recommends that you read this manual completely before placing the equipment in service.

Although Isco designs reliability into all equipment, there is always the possibility of a malfunction occurring. You can use this manual to help in diagnosing and repairing the malfunction, if possible.

If the malfunction persists, call or write the Isco Customer Service Department for assistance. (Address: Isco Inc., Environmental Division, 531 Westgate Boulevard, Lincoln, NE 68528-1586; Phone: [800] 228-4373 or [402] 474-2233 Fax: [402] 474-6685.) Simple difficulties can often be diagnosed over the phone. If it is necessary to return the equipment to the factory for service, please follow the shipping instructions provided by the Customer Service Department, including the use of the **Return Authorization Number** specified. **Be sure to include a note describing the malfunction.** This will aid in the prompt repair and return of the equipment.

Isco welcomes suggestions that would improve the information presented in this manual or enhance the operation of the equipment itself.

Table of Contents

Chapter 1 Product Description..... 1
Introduction 1
Manual Organization 1
Description 1
3700FR Refrigerated Sampler 1
Programmable Features 2
Flexible Sampling Intervals 2
Multiplexing 2
Storm Sampling 3
Accurate Sample Volumes 3
Flexible Start Times 3
Foreign Languages and Metric Units of Measure 3
Delivery System 3
Liquid Detector 4
Pump Tubing and Suction Lines 4
Strainers 4
Bottle Configurations 4
Power Sources 4
3720 Sampler Refrigerator 4
Isco Flow Meters 5
Isco Field Printers and SAMPLINK for Sampling Data Retrieval 5
SAMPLINK and Laptop Computers 5
Non-Isco Flow Meters 5
Liquid Level Actuator 5
Model 583 Field Computer 5
Accessories 6
Technical Specifications, Controls, and Connectors ... 6

Chapter 2 Setup & Operating Procedures .. 8
Introduction 8
Summary of Setup Procedures 8
Attaching the Suction Line 8
Attaching the Vinyl Suction Line to the Pump Tubing . 8
Attaching the Teflon Suction Line to the Pump Tubing 9
Placement of the Suction Line and Intake 9
Strainers 9
Attaching the Debris Deflector to the Strainer 9
Weighted Strainer Optional 10
Intake Placement 10
Connection to a Power Source 10
Connection to a Flow Meter or Flow Logger 11
Sample Bottle Rack or Bottle Locating Base 11
Installing the 24, 12, or 8 Bottle Configuration 11
Sample Bottle Rack with 24 or 12 Sample Bottle 11
Sample Bottle Rack with 8 Sample Bottles 12
Bottle Locating Base with 2 Sample Bottles 13
Operation of the Refrigerator 13
Automatic Defrosting 14

Chapter 3 Programming Guidelines 15
Introduction 15
Chapter Organization 15
Description of Sampling Operations 15
Sample Events and the Sampling Cycle 15
Types of Samples 16
Types of Sample Pacing 16
Types of Sample Distribution 16
Multiplexing 17
Samples-per-Bottle Multiplexing 17
Bottles-per-Sample Multiplexing 17
Types of Sampling Available Through the Extended Programming Mode 17
Nonuniform Time Intervals 18
Extended Multiplexing 18
Multiple Bottle 18
Stops and Resumes 18
STORM Programming 19
STORM Event Sample Distribution Schemes 19
Programming Introduction 19
Operating States 19
Standby State 19
Run State 19
Interactive State 20
Programming Modes 20
Extended Programming 20
Configure Sequence 20
Introduction to the Programming Procedure 22
Using the Keypad to Respond to Displays 23
Keypad Description 23
Control Keys 23
Program Keys 23
Numeric Keys 25
Displays 25
Informational Displays 25
Input Displays 25
Display Numbers 25
Displays With Choices 25
Numeric Input Displays 25
Editing Numbers 26
Military Times 26
European Date Format 26
Exit Program Key 26
Basic Programming Mode Introduction 26
Two Sets Of Examples 26
Basic Programming Procedure 27
Configure Sequence 42
Set Clock 42
Bottles and Sizes 42
Portable or Refrigerated Sampler 43
Portable 43
Refrigerated 43
Continuous Sampling 43
Cumulative Error 43
Suction Line 44
Liquid Detector 44
Enable/Disable Detector 44
Rinse Cycles 44
Enter Head Manually 44

Sampling Retries 45
Programming Mode 45
Load Stored Program 47
Save Current Program 48
Flow Mode Sampling 49
Sample at Start Time 49
Sample at Time Switch 49
Nonuniform Time 49
Calibrate Sampler 49
Sampling Stop/Resume 49
Enable/Disable 49
Sample at Stop 49
Sample at Resume 49
Start Time Delay 49
Enable Pin 50
Sample Upon Disable 50
Sample Upon Enable 50
Reset Sample Interval 50
Inhibit Countdown 50
Event Mark 50
Continuous/Pulse Signal 51
Pump/Cycle Forward Pumping 51
Pulse Signal Timing 52
Purge Counts 52
Tubing Life 52
Program Lock 52
Sampler ID 52
Acceptable Characters 52
Run Diagnostics 52
Software Revision Number 52
Test RAM and ROM 52
LCD Test 52
Pump Test 52
Distributor Test 53
Re-initialize Controller 53
Exit Configuration 53
Extended Programming Mode 53
Extended Mode Sample Pacing 56
Extended Mode Sample Distribution 56
Extended Mode Sample Volumes 57
Extended Mode Key Times 57
First Switch Time 57
Stops and Resumes 57
Start Times 57
Sequence of events preceding sampling routine 57
Nonuniform Clock Times and Disable Signals 58
Manual Sample Key and Programmed Start Times 58
Start Time Delay 58
Storm Programming 61
Storm Sampling Checklist 61
Equipment Checklist 61
Optional Equipment Checklist 61
Installation Checklist 61
Terminating the Routine 62
Manual Samples 62
Run State Displays 62
Programming the Sampler for a Storm Routine 64
First Section: Settings for the First Bottle Group 64
How to Allocate Bottles to the Bottle Groups 64
Sample Distribution and Sample Volumes for the First and Second Bottle Groups 64
Second Section: Second Bottle Group 68
Pacing for the Second Bottle Group 68
Time-Pacing 68
Flow-Pacing for the Second Bottle Group 69
STORM Key Times 71
Programmed Start Times, Start Time Delays, and Delays to Group Sample 71
Programming Examples 71
Foreign Languages and Metric Units of Measure 72
Standby State 88
Standby Display 88
Program Halted 88
Additional Displays 91
Done 91
Problem Occurred 91
Display Status 91
Display Status and Reviewing or Printing Program Information 91
Source of Sample Event 93
Error Messages and Missed Samples 93
Run State 94

Chapter 4 Routine Maintenance 98

Routine Maintenance 98
Weather and Corrosion Resistance 98
Cleaning 98
Tubing 98
Sample Bottles 98
Cleaning Protocols for Priority Pollutants 98
Proper Cleaning 98
Cleaning Examples 98
Cleaning the Refrigerator 99
Cleaning the Bottle Locating Base & Sample Bottles 99
Replacement of Pump Tubing 99
Inspection of Pump Tubing 100
Removing the Pump Tubing 100
Installing a New Pump Tube 101
Replacement of Suction Line 102
Cleaning Suction Line 102
Replacement Vinyl Line 102
Replacement Teflon Line 102
Vinyl Suction Line 102
Bulk Suction Line 102
Teflon Suction Line 102
Changing the Internal Desiccant 102
Renewing the Desiccant 103

Chapter 5 Options and Interfacing Equipment 104
Introduction 104
Flow Meter Connections 104
Isco Flow Meters and Flow Loggers 104
Non-Isco Flow Meters 104
Interface Devices 105
Model 1640 Liquid Level Actuator 105

Chapter 6 Servicing 107
Servicing Information 107
Electrical System 107
Refrigeration System 112
Troubleshooting Guide 112
Servicing the 3700 Controller 112
Installing a 3700 Series Controller on the 3720 Refrigerator 114
Access to Electronic Components 115
Removal of the Distributor Gear Case Assembly 116
Removal of the Pump Gear Case Assembly 116
Precautions for Servicing CMOS Circuitry 117
Preliminary Electronics Troubleshooting Steps 117
Circuit Boards 117
Main Board 118
Pump Control Board 118
Sample Event Cycle & Delivery of Sample Volumes 123
Peristaltic Pump 123
Volumetric Determination 123
Sample Delivery 123
Replacement Parts List 123
Accessory Parts List 123

Appendix A Accessories List 136

Appendix B Display Index 138

Appendix C Calculating Flow Increment Between Samples 147

Appendix D Glossary 149

List of Figures

1. Tube Coupling without Suction Line and Pump Tubing Attached 9
2. Tube Coupling with Suction Line and Pump Tubing 9
3. Polypropylene Strainer with Debris Deflector 10
4. Polypropylene Strainer with Debris Deflector in Place 10
5. Stainless Steel Strainer 10
6. Flow Meter Cable Connection and Suction Line Port 10
7. Liquid Deflector 12
8. Interior of the 3700FR/3720 12
9. Sample Bottle Rack with 24 Sample Bottles 12
10. Sample Bottle Rack with 24 Sample Bottles 13
11. Plastic Sample Bottle Rack with 8 Sample Bottles 13
12. Glass Sample Bottle Rack with 8 Sample Bottles 13
13. Sequential Sample Distribution 16
14. Samples-Per-Bottle Multiplexing 17
15. Bottles-Per-Sample Multiplexing 17
16. Multiple Bottle Compositing 18
17. Storm Distribution Scheme 19
18. Interactive State Structure 21
19. 3700FR Sampler Control Panel 24
20. Basic Programming Mode: Program Sequence Structure 28
21. Event Mark and Bottle Number Signal Output 51
22. Simplified Start Time Diagram 58
23. Start Time Diagram 59
24. Start Time Diagram for Nonuniform Clock Time Routines 60
25. Extended Programming Mode: Sample Pacing and Sample Distribution .. 65
26. Extended Programming Mode: STORM Programming 66
27. Extended Programming Mode: STORM Programming 67
28. Storm Sampling: Time Pacing for the Second Bottle Group . 69
29. Storm Sampling: Flow Pacing for the second Bottle Group .. 70
30. Start Time Diagram for STORM Routines . 73
31. Liquid Detector and Pump Case 100
32. Interior of Liquid Detector and Pump Tube 101
33. Control Box Internal Desiccant 103
34. Pin Location Diagram for 6-pin Connector 104
35. Type A Interface 106
36. 4-20 mA Sampler Input Interface 106
36. Rear View of the 3700FR/3720 107
37. Circuit Board Wiring Connections 108
38. 3700FR/3720 Refrigerator Wiring Diagram 110
39. 3700FR/3720 Schematic Diagram 111
40. Refrigeration Schematic Diagram 112
41. Compressor Trouble-Shooting Flowchart . 113
42. Mounting the Control Box 114
43. Underside of the Control Box Cover 115
44. Main Circuit Board 116
45. Control Box Tray Removal 117
46. 3700 Controller Main Circuit Board Schematic 119
47. Main Circuit Board Component Layout ... 120
48. Case Schematic Diagram 121
49. Optical Counter PCB Component Layout . 122
50. Time Line 139

List of Tables

1. Technical Specifications 6
2. Controls and Connectors 7
3. Configure Option Functions 21
4. Bottle volume settings for sequential and composite bottle configurations 43
5. Sampling capabilities available through the Program Sequence 45
6. Factory Configure Option Settings 54
7. Factory Program Sequence Settings 55
8. Recommended STORM Settings for Configure Options 62
9. Run State Displays: Time-paced Sampling 95
10. Run State Displays: Flow-paced Sampling 96
11. Run State Displays: Composite Sampling 97
12. 6-Pin Printer Connector Wiring 105
13. 6-Pin Flow Meter Connector Wiring 105

List of Examples

1. Checking the Configure Option Settings 29
2. Time-Paced Sequential Sampling 32
3. Flow-paced Sequential Sampling 34
4. Time-paced Multiplexed (Samples-Per-Bottle) Sampling 35
5. Flow-paced Multiplexed (Bottles-per-Sample) Sampling 37
6. Time-Paced Composite Sampling 39
7. Calibration Procedure 41
8. Loading a Stored Program 47
9. Saving a Current Program 48
10. Extended Time-paced Sequential Sampling 74
11. Time-paced Multiplexed (Samples-Per-Bottle) Sampling 75
12. Extended Flow-paced Multiplexed (Bottles-Per-Sample) Sampling 77
13. Extended Flow-paced Multiplexed (Multiple Bottle Compositing) Sampling 79
14. Nonuniform Time-paced Sequential Sampling . . . 81
15. Entering Nonuniform times as Specific Clock Times 83
16. Extended Time-paced Sequential Sampling Using Stops and Resumes 84
17. Storm Water Run Off Sampling 86
18. Program Started Later than Programmed Start Time 89
19. Program Started Later than Programmed First Switch Time 90
20. Program Started Later than Programmed Stop Time 90
21. Display Status: Results of Sampling Program 92

Chapter 1 Product Description

INTRODUCTION

This chapter contains of a brief discussion of the organization of the manual, an overall description of the sampler, and a list of technical specifications.

Manual Organization

This manual contains the information necessary to operate, maintain, and service the 3700FR/3720 Refrigerated Sampler. It has six chapters.

Chapter 1 is a general introduction to the sampler and refrigerator.

Chapter 2 covers preparation for use, operating the refrigerator, and automatic refrigerated sampling.

Chapter 3 covers programming guidelines.

Chapter 4 contains maintenance information.

Chapter 5 discusses optional equipment that can interface with the sampler.

Chapter 6 includes servicing information to assist you in correcting problems. It also contains an illustrated list of replacement parts.

Description

The 3700FR consists of a 3720 refrigerator and a 3700 controller mounted on the refrigerator. This instruction manual covers the two configurations in which the refrigerator is available: the 3700FR and the 3720. Each configuration is discussed individually in the following sections.

3700FR REFRIGERATED SAMPLER

The 3700FR/3720 Fiberglass Refrigerated Sampler is a programmable liquid sampler designed for sequential (discrete) sampling. It is one of Isco's 3700 Series of portable and refrigerated samplers. The extensive sampling capabilities, flexible programming, and durable construction make the 3700FR Sampler ideally suited for general purpose or priority pollutant sampling. The 3700 Sampler also provides storm-paced sampling capabilities designed to meet the EPA requirements for storm water run off monitoring.

The 3700FR Sampler, although extremely easy to use, offers a number of very sophisticated features. The following sections introduce key features and provide an overview of the unit's sampling capabilities and a variety of interfacing equipment. Examples of interfacing equipment include:

- Isco 4100 Series Flow Loggers, 4200 and 3200 Series Flow Meters, 3010 FM Ultrasonic Flow Transmitter and 3020 Flow Transmitter (collectively called "flow meters" throughout this manual) for flow weighted sampling and sampler-enable control.
- Isco Field Printers that print the sampler's program settings and sampling results.
- Laptop computers that collect, store, or transfer the same data from a sampler in the field to a computer in the office.
- Isco Model 583 Field Computer, which can be used instead of a laptop computer that gathers data and downloads it to an office-based PC.
- Model 1640 Liquid Level Sampler Actuator for sampling when a liquid level reaches a predetermined height.
- PAL 1101 (Parameter Actuator Logger) for sampling when the pH and temperature of the liquid reaches a predetermined value.

The 3700FR Refrigerated Sampler consists of the 3720 Sampler Refrigerator with the 3700 controller installed on the refrigerator at the factory. (The 3720 is discussed in *Technical Specifications, Controls, and Connectors* on page 6.) The controller is housed in the watertight control box mounted on the top of the refrigerator. The controller consists of a microprocessor with software embedded in a PROM (Programmable Read-Only Memory) and supporting electronics. The controller runs the pump, responds to the keypad, and presents information on the display. It governs all automatic sampling according to user-selectable program settings. The controller provides for manual control of the sampler; for instance, you can run the pump forward with the pump forward key or initiate a manual sample with the manual sample key.

The control panel, containing the 40-character alphanumeric LCD (Liquid Crystal Display) and keypad, is located on the top of the control box. The 24-position keypad is used to enter program parameters and direct the following controls: on/off, pump reverse, pump forward, stop the pump, start sampling, resume sampling, display the operating status and move the distributor arm to the next bottle. A desiccator is installed in the control box to prevent moisture damage to the electronics, pump, and distributor systems.

PROGRAMMABLE FEATURES

An intuitive user-interface allows the 3700FR Sampler to be easily programmed for both simple and complex sampling schemes. The LCD prompts you through the programming process by presenting a choice or a question on the sampler's LCD. Programming the sampler is a matter of responding to displayed prompts with the keypad.

Two programming modes, "basic" and "extended," are standard with the 3700FR Sampler. The basic programming mode allows you to set up typical sampling routines easily and efficiently. The extended programming mode expands the versatility of the sampler by providing options which allow you to create complex sampling routines.

The LCD not only prompts you through the programming process, but also allows you to closely monitor a sampling routine as it is executed. The LCD displays pertinent information about the routine – for example, the time of the next sample – and notifies you of any problems encountered during the routine. As the routine progresses, the sampler logs (stores) key information about the results of the routine. The results include the start time, any halt and resume times, time of samples, and cause of any missed samples. This information is accessible during a routine or after a sampling routine is finished. You can view this information from the sampler's display or retrieve it with the Field Printer or a laptop computer running Isco's SAMPLINK software.

Flexible Sampling Intervals

The 3700FR is designed to collect as many as 24 separate sequential (discrete) samples and is fully programmable for true composite sampling. Both sequential and composite samples may be collected at user-definable time intervals (time-pacing) or at equal flow volume intervals using flow pulse inputs from an external flow meter (flow-pacing). The flow interval may be set from 1 to 9999 flow pulses. Sampling can be terminated by a user-defined number of samples.

The sampler offers two types of time-pacing: uniform and nonuniform. Uniform time-paced samples may be taken at regular time intervals, a sample every 15 minutes, for example. The interval between samples can be set from 1 minute to 99 hours, 59 minutes in 1 minute intervals. Using the extended programming mode, you can specify up to 999 (or bottle volume dependent) non-uniform time intervals in minutes. For example, you can program the sampler to take the first six samples at 10 minutes intervals, then four more samples at 15 minute intervals, and so on. Nonuniform time intervals can be from 1 to 999 minutes in 1 minute intervals. Nonuniform times can be specified in a clock-time format by entering a time and date for each sample. The sampler will accept up to 99 nonuniform clock times.

Additionally, the Sampling Stops and Resumes feature allows you to create an intermittent sampling schedule. With this extended programming feature, you can sample only during key periods of the day. For example, you may wish to sample only during the hours of 6:00 am to 8:00 am, and 5:00 pm to 7:00 pm. You can enter up to 12 sampling stops and 12 resumes. Sampling stops and resumes can be used with both flow- and time-paced routines and with uniform and nonuniform time intervals.

Multiplexing

In addition to sequential sampling, which places one sample in each bottle, the sampler provides three standard types of multiplexed sample distribution: samples-per-bottle, bottles-per-sample multiplexing, and multiple bottle compositing. In samples-per-bottle multiplexing, more than one sample volume can be placed in a bottle. Samples-per-bottle multiplexing allows you to collect a series of small composite samples. By depositing several samples in each bottle, the contents of each bottle represent an average of the flow stream during the sampling period. In bottles-per-sample multiplexing, equal sample volumes can be placed in up to 24 bottles at each sample event. Bottles-per-sample multiplexing is ideal for situations where you need identical sets of samples – when you need to use more than one preservative, for example. Both time-paced and flow-paced sequential samples can be multiplexed.

The third type of multiplexing, multiple bottle compositing, is accessible through the extended programming mode. Multiple bottle compositing places more than one sample volume into more than one bottle. At each sample event, a sample volume is placed in several bottles, in sets of up 24 bottles. Multiple bottle compositing combines bottles-per-samples multiplexing and samples-per-bottle multiplexing; it is applicable to situations where you need a series of identical sets of samples. Multiple bottle compositing can also be used when you need to acquire a series of larger volume composite samples by taking a number of smaller samples and distributing them over several bottles.

In the extended programming mode, you can switch multiplexed bottles or bottle sets after a programmed number of samples have been deposited or after a programmed period of time has elapsed.

Both methods can be used with either time-paced or flow-paced routines. By specifying the number of samples to be deposited, you can control the volume of each bottle precisely.

By specifying the sets be switched after specific time periods, you can control the time frame for a series of sample volumes. This is especially useful for flow-paced sampling. Although the flow-rate may vary, each bottle or bottle set represents a fixed time period.

Storm Sampling

The 3700FR Sampler's storm capabilities are ideal for monitoring storm water runoff. The sampler allows you to divide the bottles into two groups. The first group of bottles is normally reserved for a first flush grab sample. The second bottle group receives the flow weighted composite samples. Samples can be distributed in either group sequentially or in any of the three types of multiplexing. Three bottle configurations are available for STORM sampling: the standard 24-bottle configuration with either 1000 or 350 ml bottles, a 12 bottle configuration containing 1 quart (950 ml) glass bottles, and a 4 bottle configuration with 1 gallon (3800 ml) glass bottles.

STORM sampling takes full advantage of the sampler enable programming available through the Isco Flow Meters and the FLOWLINK® software. You can program the flow meter to monitor the flow stream for "storm" conditions— a specific amount of rainfall, for example — and enable the sampler when it detects those conditions.

Accurate Sample Volumes

The sampler can be programmed to take sample volumes of 10 to 9990 milliliters. Equipped with the patented LD90 (Patent 5,125,801) liquid presence detector, the 3700 Sampler delivers accurate, repeatable sample volumes in changing head conditions. The LD90 is a non-wetted liquid presence detector. It detects virtually any pumpable liquid and because it is non-wetted; sample conductivity, viscosity, temperature, and composition do not affect detection. Although it is not normally necessary, samples can be calibrated, if desired.

Flexible Start Times

sampling routine can be programmed to use a specific start time and date or a start time delay. The sampler will accept a specific start time and date up to one month in advance of the current date. The start time delay is the period between the time you press the START SAMPLING key and the time the routine actually starts. It is adjustable from zero to 9999 minutes.

Other features are available. Program storage allows you to store up to three separate programs, eliminating the need to reprogram the sampler for recurrent sampling routines. A program lock is available for protection from unauthorized program alterations. When enabled, a password must be entered before any program settings can be changed, although program settings can be viewed at any time.

Foreign Languages and Metric Units of Measure

The 3700FR provides displays in French, German, and Spanish. Additionally, the software supports entries in metric units of measure. Samplers using French and German language displays support metric units for suction line and suction head measurements. Metric units include volumes in milliliters, suction head and suction line length in decimeters, and suction line inside diameter (ID) in millimeters. Samplers operating with English displays support either English or metric units for suction line and suction head measurements. (Sample volume units are always entered in milliliters, regardless of the selected language.)

Delivery System

The 3700FR Sampler uses a peristaltic pump for sample collection. The sample liquid is under pumped flow at all times; there are no metering chambers or gravity-fed internal tubing. Each sampling cycle includes an air pre-sample purge and a post-sample purge to clear the suction line both before and after sampling. These features make the 3700FR Sampler ideal for both "suspended solids" and "toxic materials" sampling. Cross contamination between samples is minimized and sites for sediment accumulation in the system are eliminated. Materials in contact with the sample fluid are limited to the strainer, suction line, pump tubing and collection bottles. The system can be easily and safely cleaned by simply replacing relatively inexpensive lengths of tubing.

Pump speed is approximately 250 RPM which generates a velocity sufficient to obtain representative samples. The pumping rate of 3500 ml/minute is generated when using 3/8 inch ID suction line at 3 ft of head. The line transport velocity, using the same suction line and head, is 2.5 ft/sec. Volumetric accuracy is not significantly affected by pump speed since the delivered volume is based on a patented electronic count of the number of pump revolutions (Patent No. 4,415,011).

Liquid Detector

The patented LD90 (Patent 5,125,801) gives the 3700FR Sampler the ability to deliver accurate, repeatable sample volumes regardless of changing head conditions. Typical sample volumes are accurate to within 10% of the programmed volume and repeatable to within ± 10 ml. The detector and a programmable setting provide for automatic rinsing of the suction line when concerns of cross contamination arise. A programmable setting for sampling retries is available.

If the suction line becomes clogged and no liquid is detected in the line, the sampler can be programmed to repeat a purge cycle – up to three times – to clear the clogged line.

Pump Tubing and Suction Lines

The pump tubing is Silastic™ medical grade silicon rubber. Liquid is transferred from the source to the pump through either 1/4 or 3/8 inch ID vinyl or 3/8 inch ID Teflon® suction tubing. The pump tubing and suction lines are easily replaced, minimizing the need for cleaning. The sampler automatically monitors pump tubing wear: a tubing warning indication is reported on the display when the pump revolution count exceeds a user-specified wear limit.

Strainers

There are two stainless steel strainers are available for priority pollutant applications: a larger unit for normal flow and a smaller unit for low flow situations. An all-plastic strainer is available for sampling from highly acidic flow streams. A weighted polypropylene strainer is used for general purpose applications.

Bottle Configurations

A number of sample containers are available for both sequential sampling and composite conversion sampling:

24-Bottle Configurations

- 350 ml glass with Teflon lined caps
- 1000 ml polypropylene bottles with polyethylene foam lined caps

12-Bottle Configuration

- 2500 ml polyethylene with foam lined caps (Note: This configuration is available for Isco's fiberglass refrigerators only.)

4- and 8- Bottle Configuration

- 3800 ml (1 gallon) glass with Teflon lined caps

Single Bottle Composite Configurations

- 9400 ml (2.5 gallon) glass composite bottle with unlined cap
- 9400 ml (2.5 gallon) polyethylene composite bottle with unlined cap
- 15,000 ml (4 gallon) polyethylene composite bottle with unlined cap
- 20,800 ml (5.5 gallon) polyethylene composite bottle with unlined cap

Power Sources

The 3720 operates from 120 VAC, 60 Hz power or 230 VAC, 50 Hz power depending on how the refrigerator was ordered. A 12 VDC power converter, built into the refrigerator, supplies power to the controller.

In the case of critical sampling, the sampler's controller may be powered by an external battery-backed power pack, as described in *Connection to a Power Source* on page 10. This allows sampling to continue even if a power failure causes the refrigerator's cooling system to stop functioning.

3720 Sampler Refrigerator

If you want to convert a presently owned 3700 Portable Sampler into a refrigerated unit, or to have both portable and refrigerated options with the same controller, the 3720 Sampler Refrigerator is available. The 3720 includes all the parts necessary to attach the controller from a portable sampler to the refrigerator.

The exterior of the refrigerator is constructed of a fiberglass reinforced polyester with an ultraviolet-resistant gel coat. The interior is made of formed ABS (acrylonitrile-butadiene-styrene) plastic which will not support bacterial growth or retain odors. Both the controller cover and sample compartment may be individually padlocked. The door utilizes a magnetic gasket which seals against a stainless steel bezel.

The refrigerator's solid state thermostat is calibrated at the factory to be accurate at 4°C (39°F). A forced-air condensing coil and front ventilation allow the unit to be positioned close to a wall or in a corner with clearance required only for the controller cover to open. Wrap-around construction of the oversized evaporator plate provides quick and efficient cooling of the sample compartment. Heaters are mounted on the back side of the evaporator plate to keep the sample from freezing in sub-freezing temperatures. Defrosting is automatic under normal operating conditions. The technical specifications of the 3700FR/3720 are found in Table 1.

A full line of accessories and interfacing equipment is available to help you adapt the sampler to your specific application; some of the more common items are briefly discussed below. Other accessories are noted throughout this manual, where appropriate. A full list of accessories is found in the *Appendix A Accessories List* on page 136.

Isco Flow Meters

The 3700FR Sampler will accept flow pulses from all Isco flow meters and flow loggers for flow proportional sampling.

These instruments are equipped with a sampler enable feature, allowing them to inhibit a 3700FR Sampler until the level of the flow stream reaches a predetermined height; when that height is reached, the flow meter enables the sampler and starts the sampling routine. If the level of the stream falls below the predetermined height, the flow meter can disable the sampler and halt the routine.

The 4200 Series Flow Meters, 4100 Flow Loggers, and certain models of the 3200 Series Flow Meters can monitor rainfall when equipped with a rain gauge. The flow meter can be programmed to enable the sampler when the measured amount of rainfall reaches a predetermined set point. Set points or pairs of set points — pairs can be level and rainfall rates, level and elapsed time, rainfall and elapsed time, and so on — form the sampler enable control condition. A control condition is simply the set of parameters defining the conditions in which a flow meter will enable the sampler. For example, a flow meter can be programmed with a control condition which is satisfied when the flow meter detects ¼ inch of rainfall in 15 minutes.

In addition to enable control conditions, Isco's flow meters provide internal memory. When programmed with the FLOWLINK software, the flow meters use the memory to store level or flow rate readings, rainfall measurements, and sample event data from the samplers. The stored data, which expands the information available from the sampler's results displays, can be retrieved with a computer running the FLOWLINK software. For more information on sampler enable control conditions and data retrieval, refer to the *FLOWLINK Tutorial* provided with the FLOWLINK software.

Isco Field Printers and SAMPLINK for Sampling Data Retrieval

Isco provides three additional interfacing products. Each of these products collect data from the sampler's memory. The first product is the Isco Field Printer designed to print sampling data from a 3700 Series Sampler. You can initiate the reports from either the printer or the sampler.

The Isco Field Printer prints two reports which reproduce the data collected by the sampler. The first report lists the current status data and program settings for the sampling routine. The second report lists the sampling results currently stored in the sampler's memory. The results include the time, date, and bottle numbers for each sample event and any errors encountered during the routine.

SAMPLINK and Laptop Computers

The second data collection product is a software package: SAMPLINK. SAMPLINK runs on a laptop computer that can be taken to the sampling installation to collect the data. SAMPLINK collects the data and formats it into two files: a text file and a FLOWLINK compatible sample event file. The text file can be loaded into a word processor for editing. SAMPLINK's text file contains the same two reports produced by the Field Printer. The first report contains sampler status information and program settings. The second report contains the sampling results. Because the text file is pre-formatted into report form, you can use DOS printing commands to print the file without editing with a word processor.

The sample event files are identical to those created by FLOWLINK when it retrieves sample event data from Isco's flow meters and flow loggers. Because these files are fully compatible with FLOWLINK, FLOWLINK can use the files in its sampling reports and graphs.

Non-Isco Flow Meters

The 3700 Sampler will accept flow pulses from certain non-Isco flow meters. Two interface accessories convert incompatible (non-Isco) signals to pulses acceptable to the 3700 Sampler. The Type A Interface converts pulse duration input; the 4-20 mA Sampler Input Interface converts 4-20 mA output signals. The 3700 Sampler sends event marks to both Isco and non-Isco flow meters each time a sample is taken.

Liquid Level Actuator

Another item, the Liquid Level Actuator, is used to provide level sensitive control of the sampler. The actuator can be used as an alternative to a flow logger or flow meter.

Model 583 Field Computer

The Isco 583 Field Computer is a rugged, weatherproof hand-held computer designed for retrieving data in the field and downloading it to IBM PC or compatible computers running FLOWLINK software. The unit has a keypad for manual data entry and inputs for sensors such as bar code wands.

Accessories

Two additional accessories are available:

Type A Interface - Converts flow pulse duration output from non-Isco flow meters to flow pulses acceptable to the 3700FR Sampler.

4-20 mA Sampler Input Interface - Converts 4 to 20 mA output signals from non-Isco flow meters to flow pulses acceptable to the 3700FR Sampler.

TECHNICAL SPECIFICATIONS, CONTROLS, AND CONNECTORS

The controls and connectors of the 3700FR/3720 are listed in **Table 1** and **Table 2**. Refer to **Figure 6,** on page 10 for a picture of the controls and connectors.

Table 1 Technical Specifications

Physical Specifications

Physical Size	Height: 47 inches (119 cm) Width: 26 inches (66 cm) Depth: 26 inches (66 cm)
Dry weight	175 lb (80 kg)
Shipping weight	200 lbs (91 kg)
Operational Temperature Range	-20°F to 120°F (-29°C to 49°C)
Storage Temperature Range	0° to 140° F (-20° to 60° C)
Control Box	Self Certified NEMA 4X and 6 ratings (Submersible, watertight, dust-tight, and corrosion resistant)
Temperature set point accuracy	± 1.8°F (1°C) at 39°F (4°C)
Pulldown time from 75°F (24°C) to 39°F (4°C)	15 minutes, typical
Recovery time, door open 1 minute with unit operating at 39°F (4°C), 75°F (24°C) ambient	5 minutes, typical

Power Specifications

Sampler Controller Power Requirement	12V DC AC power converter Sampler standby current 10 mA, maximum
Voltage	120V, 60 Hz (230V, 50 Hz available)
Current: Running Starting Stalled compressor	3.5 amp, typical 120 volts. (1.75 amp, typical 230 volts) 15 amp, typical 120 volts. (7.5 amp, typical 230 volts) 20.7 amp, maximum 120 volts. (10.4 amp at 230 volts)
Controller Internal 3V Lithium Battery Capacity	5 years, minimum (maintains internal logic and program settings)

Refrigeration System

Compressor	1/6HP Tecumseh AE1343A for refrigerators with serial numbers before 11901-001 1/5 HP Tecumseh AE1360Y for refrigerators with serial numbers beginning with 11901-001
Refrigerant	R-12, 8.5 oz. charge for refrigerators with serial numbers before 11901-001 R-134a, 7.5 oz. charge for refrigerators with serial numbers beginning with 11901-001

Pump and Tubing Specifications

Suction Tubing (intake)	3 to 99 foot lengths of: 1/4 inch ID vinyl 3/8 inch ID vinyl 3/8 inch ID Teflon® lined

Table 1. Technical Specifications (continued)

Suction Lift	26 feet (7.9 m), maximum
Pumping Rate (at 3 feet of head)	1/4 inch ID suction tubing: 3000 ml/minute 3/8 inch ID suction tubing: 3500 ml/minute
Line Transport Velocity (at 3 feet of head)	1/4 inch ID suction tubing: 5.1 ft/sec 3/8 inch ID suction tubing: 2.5 ft/sec

Clock Specifications

Real Time Clock Accuracy	1 minute/month, typical

Sample Specifications

Sample Volume Accuracy	Accuracy with the liquid detector enabled and automatic compensation for head: typically, the greater of ± 10% or ± 20 ml, over a head range of 1 to 12 feet and sampler supply voltage of 10 to 13 volts.
Sample Volume Repeatability	± 10 ml, typical
Sample Frequency	Selectable from one minute to 99 hours, 59 minutes in 1 minute increments between consecutive samples, or from 1 to 9999 flow pulses in single pulse intervals. Up to 999 nonuniform times may be entered in minute intervals or up to 99 times as specific clock times.

Flow Meter Signal Specifications

Flow Meter Signal Requirements	5 to 15 volt DC pulse or isolated contact closure of at least 25 milliseconds duration. (4-20 mA or pulse duration signal may be converted with optional interface unit).

Table 2 Controls and Connectors

Controls

CONTROL	SETTING	FUNCTION
Thermostat	WARMER, COOLER, 4°C (39°F)	selects the sample temperature

Connectors

CONNECTOR	TYPE	FUNCTION
12V DC	2-pin female mounted	12V DC power supply for sampler
Printer	6-pin female panel mounted	Connects 3700FR to Isco Field Printer or laptop computer
Flow Meter	6-pin male panel mounted	Connects 3700FR to external flow meter
120 or 230 VAC	3-pin grounded male line cord	Supplies line voltage for the unit

Note: This equipment generates and uses radio frequency energy and if not installed and used properly, in strict accordance with the manufacturer's directions, may cause interference with radio and television reception. There is no guarantee that interference will not occur in a particular installation. If this equipment does cause interference with radio or television reception, which can be determined by turning equipment off and on, the user is encouraged to try to correct the interference by one or more of the following measures.

- Reorient the receiving antenna on the television
- Relocate the unit with respect to the receiver
- Plug the unit into a different outlet so the unit and receiver are on different branch circuits
- If necessary, consult the manufacturer or an experienced radio-television technician for additional suggestions.

You may find the following booklet prepared by the FCC helpful: "*How to Identify and Resolve Radio-TV Interference Problems.*" This book is available from the U.S. Government printing Office, Washington, D.C. 20402, Stock No. 004-00-0035404.

Chapter 2 Setup and Operating Procedures

INTRODUCTION

This chapter provides the information necessary for everyday operation of the refrigerator. Included are sections covering setup, operation of the refrigerator, and automatic refrigerated sampling.

A summary of setup procedures appears in *Summary of Setup Procedures,* on page 8.

Attaching the suction line is discussed *in Attaching the Suction Line* , on page 8.

Placement of the suction line intake or strainers is discussed in *Placement of the Suction Line and Intake,* on page 9.

Connection to a power source is discussed in *Connection to a Power Source,* on page 10.

Connection to a flow meter or flow logger is discussed in *Connection to a Flow Meter or Flow Logger,* on page 11.

Sample bottle racks and the bottle locating base are discussed in *Sample Bottle Rack or Bottle Locating Base,* on page 11.

Operation of the refrigerator is discussed in *Operation of the Refrigerator,* on page 13.

SUMMARY OF SETUP PROCEDURES

The following sections detail the preparations made before using the refrigerator. To place the sampler into operation:

1. Install the sampler.

   Although the suction line can extend to a liquid source up to 99 feet from the sampler, note that the maximum lift for the peristaltic pump with either the Teflon or vinyl line is 26 feet. When installing the sampler, be sure the head — the vertical distance between the level of the liquid source and the pump — is no greater than 26 feet. The pump will not be able to deliver samples for heads of 26 feet or greater.
2. Be sure the sampler is connected to a 120 VAC (230 VAC) power source. Turn the refrigerator on.
3. Attach the suction line.
4. Place the suction line inlet properly in the liquid source.
5. Connect the sampler to a flow meter or flow logger, if required.
6. Program the sampler. Guidelines for programming the sampler are in **Chapter 3**.
7. Calibrate the sample volume, if desired. (**Chapter 3** contains calibration instructions.)
8. Start the sampling routine.

ATTACHING THE SUCTION LINE

The suction line is the piece of tubing that extends from the sampler's pump tubing intake, at the top of the liquid detector, to the liquid source. There are three standard suction lines available: plasticized vinyl tubing in 1/4 inch (0.64 cm) or 3/8 inch (0.94 cm) inside diameters, or FEP Teflon with a polyethylene cover in 3/8 inch inside diameter. The polyethylene cover over the 0.02 inch (0.051 cm) wall Teflon tubing prevents the Teflon liner from kinking or collapsing in service and protects it from abrasion and other damage.

The vinyl suction tubing contains a very low PPM (parts per million) level of phenols. If this affects your samples, use the Teflon suction line.

Both vinyl and Teflon lines can be cut to any length from 3 to 99 feet in 1 foot increments. Cut the suction line in whole foot increments: lengths of 4 ft, not 3.5 ft. The controller will accept only whole numbers as suction line lengths. To insure the accuracy of the sampler, the suction line length entered must equal that of the actual line measurement. When programming the sampler, you must enter the inside diameter, type, and length of suction line.

Cut the line to the shortest length feasible: this aids the downhill routing. Avoid loops of coiled suction line which may hold residual amounts of liquid which would cross contaminate sample volumes. A shorter suction line will also extend battery life and pump tube life because a shorter pumping cycle will be needed to deliver the sample volume.

ATTACHING THE VINYL SUCTION LINE TO THE PUMP TUBING

Vinyl suction line is attached to the pump tubing with the tube coupling as illustrated in **Figures 1** and **2**. Two couplings are available, one for each size of vinyl line.

Each coupling has two color coded nylon clamps attached to the stainless steel ferrule. The black clamp secures the pump tube to the coupling.

The white clamp secures the suction line. To attach the line or tubing to the coupling, push it onto the appropriate side of the ferrule and tighten the clamp by squeezing the finger pads together. To loosen a clamp, twist the two sides of the clamp until the teeth disengage.

Attaching the Teflon Suction Line to the Pump Tubing

The Teflon line is attached to the pump tubing by inserting the line into the pump tubing and securing it with a suitable clamp.

Figure 1 Tube Coupling without Suction Line and Pump Tubing Attached

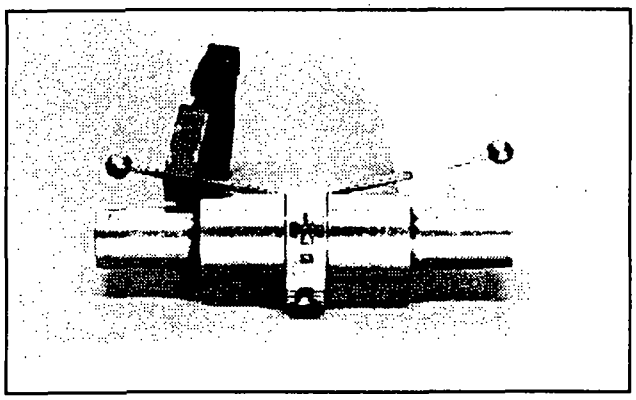

Figure 2 Tube Coupling with Suction Line and Pump Tubing

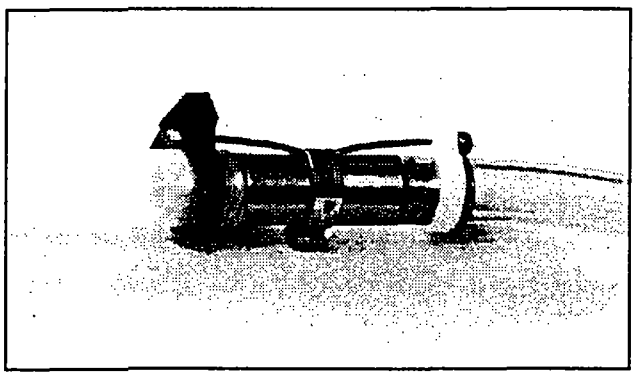

Placement of the Suction Line and Intake

Route the suction line from sampler to sampling point so that it slopes continuously downhill. This helps drain the suction line when the peristaltic pump purges the line and minimizes the possibility of cross contamination. When the sampler is used in near freezing temperatures, thoroughly draining the suction line minimizes the possibility of frozen liquid clogging the line.

Strainers

The 1/4 and 3/8 inch ID (inside diameter) vinyl suction lines are shipped from the factory with a polypropylene bodied weighted inlet strainer installed on the end of the suction line, as shown in **Figures 3** and **4**.

Optional stainless steel strainers (see **Figure 5**) are also available for use with the vinyl or Teflon suction lines. For sampling from highly acidic flow streams, an plastic strainer is available. Bulk suction line can be purchased without strainers. Refer to the *Appendix A Accessories List,* on page 136 for more information.

The strainer prevents solid particles over a specific diameter from entering and clogging the suction line. It is recommended for bottom sampling or sampling from streams containing large solids. The 1/4 inch strainers supplied for use with the 1/4 inch ID suction line have 15/64 inch (0.56 cm) diameter holes. The 3/8 inch strainers supplied for use with the vinyl or Teflon 3/8 inch ID suction line have 23/64 inch (0.9 cm) diameter holes.

The suction line tends to float in deep flow streams, dislodging the line and strainer. The table below shows the maximum depths you can submerge the lines and strainers without risks of floatation. At depths exceeding the safe depths, anchor the line and strainer securely.

Strainer	1/4"Vinyl Line	3/8" Vinyl Line	3/8" Teflon Line
Stainless Steel	-------	22 feet	15 feet
Low-Flow Stainless Steel	14 feet	7 feet	-------
Polypropylene	22 feet	11 feet	-------
CPVC	-------	4 feet	-------

Attaching the Debris Deflector to the Strainer

A debris deflector prevents debris from accumulating on the hose clamp which attaches the strainer to the vinyl line. The 3/8 inch polypropylene strainer is shipped with the line attached and the debris deflector in place.

To replace the strainer line with a debris deflector:

1. Push the deflector back up the line to expose the hose clamp. See **Figure 3**.
2. Loosen the clamp and pull the line from the strainer's ferrule.
3. Remove the deflector from the old line and thread it on the new line. Push the deflector back on the new line; leave enough room to work with the hose clamp.
4. Thread the hose clamp on the new line.

5. Slip the line onto the ferrule and secure it with the hose clamp.
6. Push the debris deflector down the vinyl line and onto the strainer. **Figure 4** shows the deflector in place.

Figure 3 Polypropylene Strainer with Debris Deflector

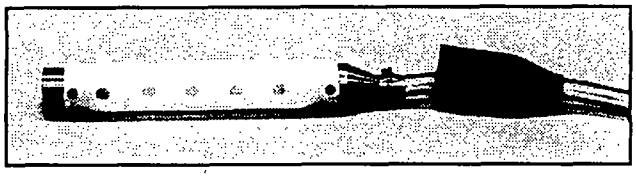

Figure 4 Polypropylene Strainer with Debris Deflector in Place

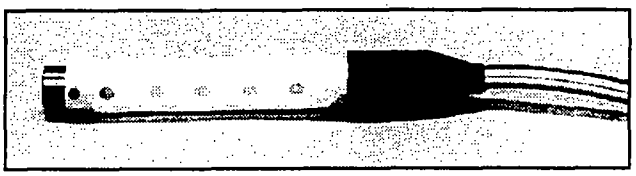

Figure 5 Stainless Steel Strainer

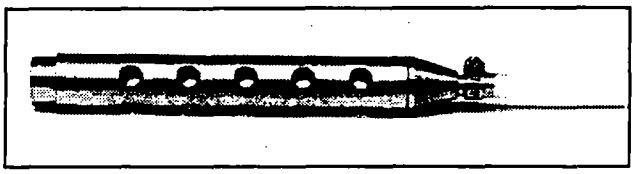

Weighted Strainer Optional

The use of the weighted strainer is optional. When heavy suspended solids are involved and flow stream velocities are significant, some field investigation results indicate more representative samples are obtained without the strainer. If the strainer is not used, a short piece of thin walled aluminum tubing may be attached to the end of the suction line and the tubing anchored in the flow stream so that the inlet is oriented upstream. The thin wall will provide minimum disturbance of the flow stream and aluminum ions are usually not of concern in analysis. Whether the strainer is used or not, the pre-sample purge cycle should be sufficient to remove any debris which may collect over the strainer or tubing entrance between sampling events.

Intake Placement

The proper placement of the sampler intake assures the collection of representative samples. The intake should be placed in the main flow, not in an eddy or at the edge of flow. The vertical position of the intake in the flow is important. An intake at the bottom may result in excess heavy solids and no floating materials, while placement at the top may result in the opposite.

Connection to a Power Source

The 3720 operates from 120 VAC, 60 Hz power (230 VAC, 50 Hz). To provide power for the refrigerator and controller, plug the refrigerator's line cord into an appropriate source. A 12 VDC power converter, built into the refrigerator, supplies power to the controller. A 3V lithium battery, with a minimum service life of 5 years, maintains the controller's real time clock and program settings when power is disconnected. The sampler's controller may be temporarily powered by an external 12 VDC battery-backed power pack when AC power is not available. Simply disconnect the power cable shown in **Figure 6** and attach the power-pack connector to the sampler's power connector. Refer to the *Power Products Guide* for more information on external power sources for the controller.

Figure 6 Flow Meter Cable Connection and Suction Line Port

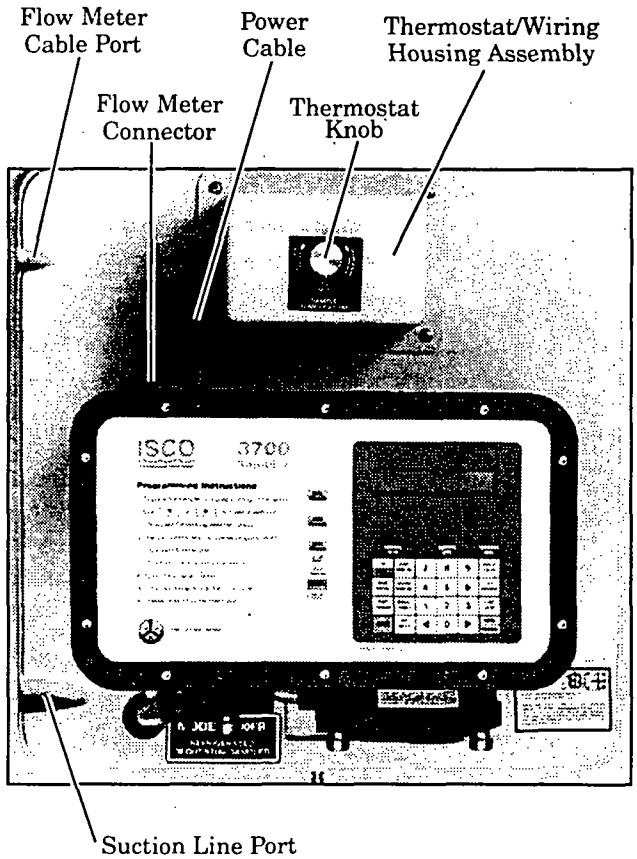

Connection to a Flow Meter or Flow Logger

To permit flow proportional sampling, the sampler's controller must be connected to an external flow meter. This connection is made to the flowmeter connector, shown in **Figure 6**. A small port is provided on the left side of the control base for routing the flow meter cable. Refer to **Chapter 5** for information on interfacing devices required to interface the sampler with non-Isco flow meters.

Sample Bottle Rack or Bottle Locating Base

The sample bottle rack is used with both the 24, 12, and 8 bottle configurations to hold the bottles in place inside the refrigerator. The bottle locating base is used with the 2 bottle configuration to position the bottles in place inside the refrigerator. All three configurations are described in detail below.

If you want to use a bottle configuration other than the one presently being used, conversion kits are available. Consult the factory or your sales representative for more information.

Installing the 24, 12, or 8 Bottle Configuration

Install the bottle rack, with bottles, in the refrigerator by sliding it into the unit until it drops over the two ramps which hold it in place. The five posts and two ramps which locate the bottles under the distributor arm are adjusted at the factory; however, manufacturing tolerances may result in misalignment between the bottles and distributor arm. Check the alignment by rotating the distributor arm using the NEXT BOTTLE key. If there is any misalignment, adjust the five posts and two ramps until proper alignment is attained.

Sample Bottle Rack with 24 or 12 Sample Bottle

The sample bottle rack will hold either 24 round 350 ml, glass sample bottles with Teflon lined caps or 24 wedge-shaped 1000 ml, polypropylene sample bottles with foamed-polyethylene lined caps. The 12 bottle rack is similar, using 12 wedge-shaped plastic bottles.

The glass bottles are held in place by a stainless steel retaining ring installed inside the circle of bottles. The ring expands to hold the bottles firmly against the interior of the wire rack. The plastic bottles for both the 24 and 12 bottle configurations are held in place by a plastic, funnel-shaped retaining ring that rests on top of the slanted portion of the bottles and fits down inside the circle of bottles. It is held in place by three large draw cords attached to the bottom of the rack. Each of these draw cords is stretched up and hooked onto a corresponding projection located on the ring.

The sets of glass and plastic bottles are interchangeable in the sample bottle rack. However, since each set of bottles has its own retaining ring, only one type of bottle can be used at a time; they cannot be mixed. The order in which the bottles are filled is indicated on the plate on the bottom of the rack. Since the bottle rack is used for both 24 and 8 bottle configurations, the plate is numbered 1 through 24 and 1 through 8. The 12 bottle rack is numbered similarly.

The bottle rack is removed by slightly lifting the front edge of the rack to disengage it from the two ramps, indicated in **Figure 8**, and pulling it straight out of the refrigerator. Be careful not to catch the distributor arm. The rack with bottles is reinstalled in the refrigerator by sliding it straight in on the shelf provided. Place the bottle caps on the bottles before attempting to remove them so the sample does not spill.

To remove the glass sample bottles, lift each bottle out of the bottle rack leaving the retaining ring in place. Once all bottles are removed, lift the retaining ring out of the rack by squeezing the two finger grips. Place the new glass bottles in the rack as shown in **Figure 9**. Make sure all bottles are fitted properly in the rack. Note the four metal triangles on the inside of the rack which rotationally align the bottles. Finally, replace the bottle retaining ring.

To remove the plastic sample bottles, disconnect the draw cords from the projections on the retaining ring, lift out the retaining ring, and remove the full bottles. Place the new plastic bottles in the rack as shown in **Figure 10**, note the four metal triangles on the inside of the rack which rotationally align the bottles. Replace the bottle retaining ring making sure that all the bottles fit properly into the rack.

NOTE

All 24 bottles must be installed in the rack to ensure they are properly held in place.

Sample Bottle Rack with 8 Sample Bottles

The sample bottle rack, with the 8 bottle adapter, will hold either 8, 1.8 liter, glass sample bottles with Teflon lined caps or 8, 2 liter, polypropylene sample bottles with caps. The glass and plastic bottles are held in place by an 8 bottle adapter that hooks over the four bottle alignment triangles located on the inside edge of the bottle rack. The glass and plastic bottles are interchangeable in the sample bottle rack. Combinations of glass and plastic bottles may be used if desired. Note: All 8 bottles should be installed in the rack to insure that they are properly held in place.

The order in which the bottles are filled is indicated on the plate located on the bottom of the rack. Since the bottle rack is used for both 24 and 8 bottle configurations, the plate is numbered 1 through 24 and 1 through 8.

The bottle rack is removed by slightly lifting the front edge of the rack to disengage it from the two ramps, indicated in **Figure 8**, and pulling it straight out of the refrigerator. Be careful not to catch the distributor arm. The rack with bottles is reinstalled in the refrigerator by sliding it straight in on the shelf provided. To remove the glass or plastic sample bottles, simply lift the bottles straight out of the rack. Place the new bottles in the rack as shown in **Figure 11** Make sure all bottles are fitted properly in the rack.

Cross contamination caused by splashing between bottles is eliminated by the use of a liquid deflector. The liquid deflector is coated with PTFE (polytetrafluoroethylene) Teflon. It is installed by pushing the short width part of the deflector up between the flat surface of the distributor arm and the pump tubing. See **Figure 7**.

Figure 7 Liquid Deflector

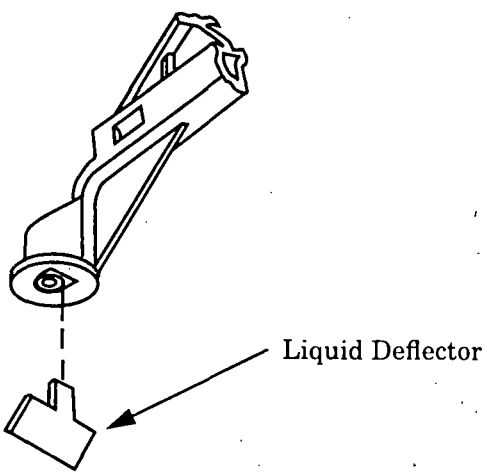

Figure 8 Interior of the 3700FR/3720

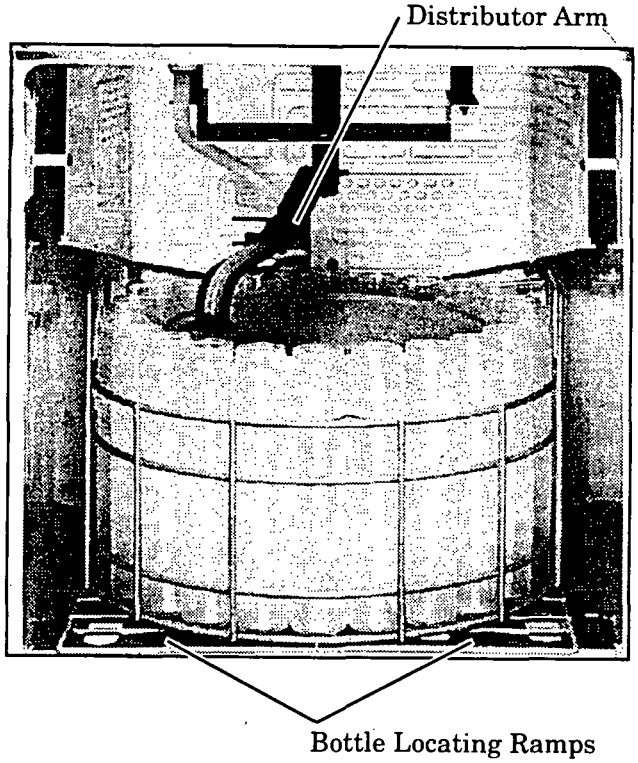

Figure 9 Sample Bottle Rack with 24 Sample Bottles

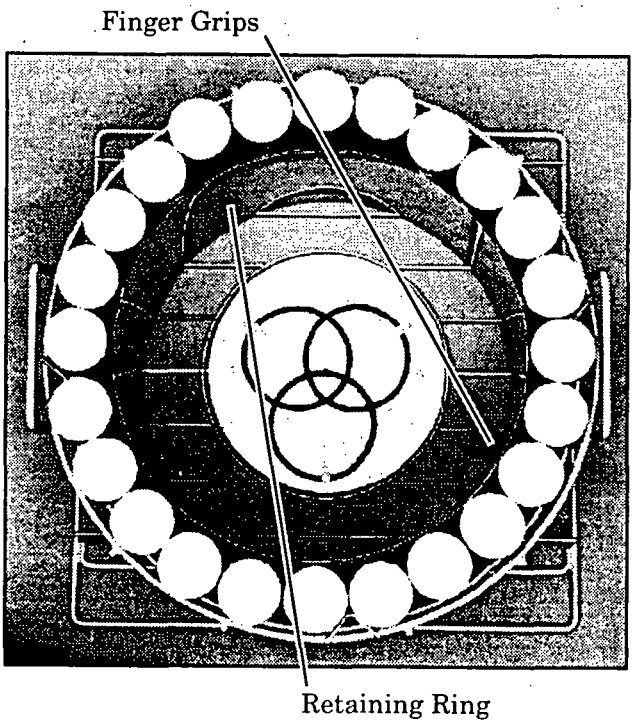

Figure 10 Sample Bottle Rack with 24 Sample Bottles

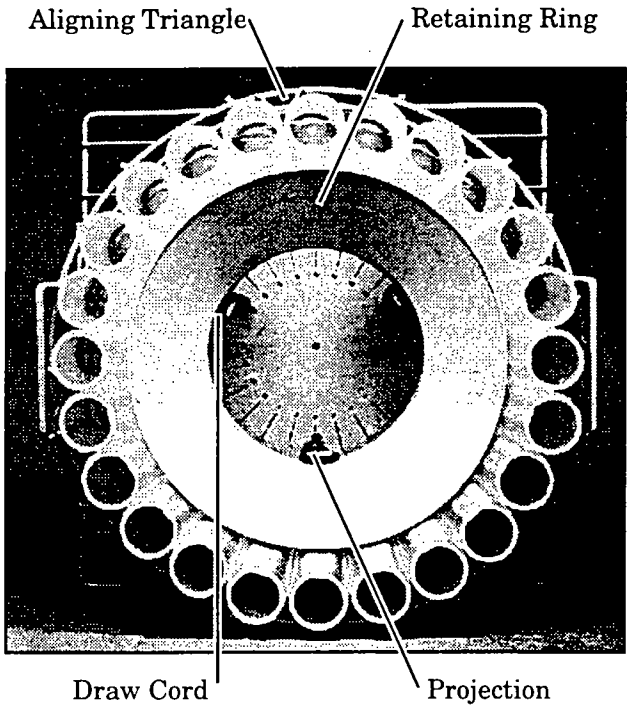

Figure 11 Plastic Sample Bottle Rack with 8 Sample Bottles

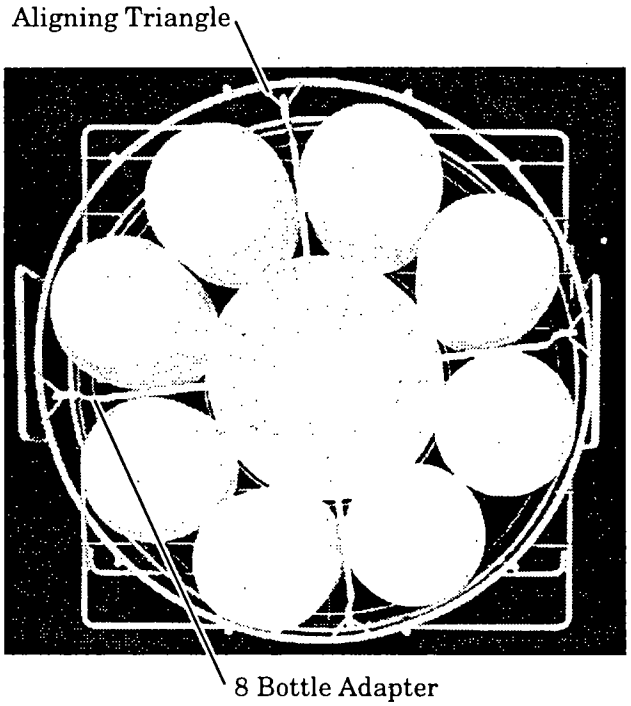

Figure 12 Glass Sample Bottle Rack with 8 Sample Bottles

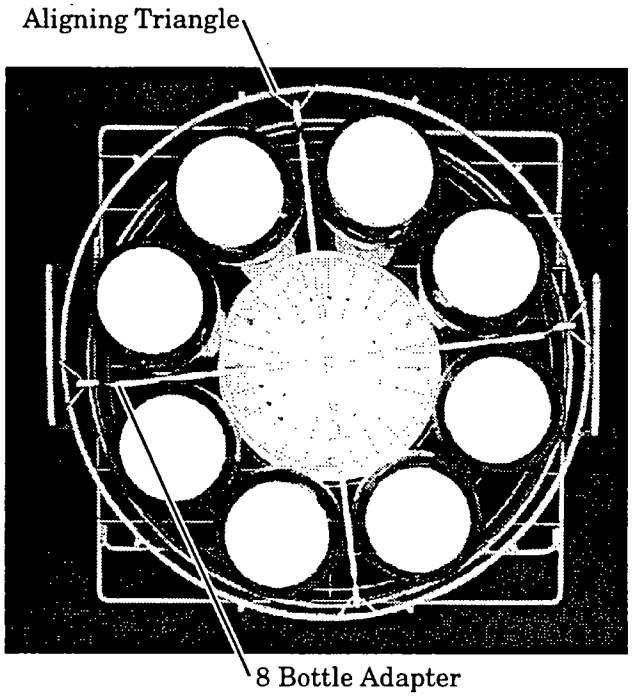

Bottle Locating Base with 2 Sample Bottles

The locating base is designed to be permanently installed over the wire rack mounting plate. It is held in place by five screws, washers, and nuts and a bottle locating base retainer. Four of the screws, washers, and nuts replace the four locating posts on the wire rack mounting plate. The fifth screw, washer, and nut and the bottle locating base retainer are used to hold the center of the bottle locating base to the wire rack mounting plate. The locating base will hold either the 2.5 gallon glass or plastic bottles.

To install the bottles, center them within the bosses provided on the locating base. Bottle number one is the left bottle when looking from the front of the refrigerator. To remove the bottle, simply lift them out of the refrigerator.

Operation of the Refrigerator

To operate the refrigerator, turn the thermostat knob, shown in **Figure 6**, to the desired sample temperature. The interior air temperature should reach the set value within 20 to 30 minutes. The refrigerator's thermostat is calibrated in sample temperature.

That is, if the temperature is set at 4°C (39°F), the temperature of the sample after being in the refrigerator will be 4°C ± 1°C, although the refrigerator air temperature may vary more than this due to the nature of the refrigeration cycle.

Note

If the thermostat knob is turned to the lowest setting, the sample may freeze.

Automatic Defrosting

Under normal conditions, you should not need to defrost the refrigerator manually. The cooling coil temperature always cycles from below freezing (when the compressor is running) to above freezing (when the compressor is off) during the normal refrigeration cycle.

If the unit is used in hot, humid conditions; you may need to defrost the unit after several days of operation. Turn the thermostat off and allow the refrigerator to defrost. The refrigerator is equipped with a water diverting tray and a drain tube to route defrost water to an evaporating tray in the rear of the refrigerator. Water in the tray is evaporated by the warm air from the condensing system. The refrigerator compressor may not start immediately when the thermostat is turned on or turned to a lower setting due to the action of the compressor overload relay. After a short time, the compressor will start and initiate the cooling cycle.

Chapter 3 Programming Guidelines

INTRODUCTION

This chapter discusses the sampling features of the 3700FR Sampler in detail and covers the procedures used to program the sampler.

We recommend that you have a sampler with you when you read this chapter. The most effective way to learn how to program the 3700FR Sampler is to read this chapter and experiment. The sampler cannot be harmed by improper programming, so there is nothing to be lost by experimenting. A few minutes spent in actually programming the sampler and observing its operation usually proves to be a worthwhile investment of time. Simply "playing" with the sampler is the best way to become familiar with programming, and may help avoid costly delays or problems when the sampler is used in the field.

If you are already familiar with the sampling capabilities of the 3700FR Sampler, you may prefer to begin with*Programming Introduction,* on page 19. This section introduces the specifics of programming the sampler.

Chapter Organization

A description of sampling operations, sample events and the sampling cycle is placed in *Description of Sampling Operations,* on page 15.

The types of samples available with the 3700FR Sampler are listed and discussed in *Types of Samples,* on page 16.

A programming introduction and a discussion of the sampler's program structure is placed in *Programming Introduction,* on page 19. The basic and extended programming modes are introduced.

The three operating states of the sampler are discussed in *Operating States,* on page 19.

The interactive operating state, used to program the sampler, is discussed in *Interactive State,* on page 20.

The programming procedure is outlined in *Introduction to the Programming Procedure,* on page 22.

Using the keypad to program the sampler is discussed in*Using the Keypad to Respond to Displays,* on page 23, *Keypad Description,* on page 23, and *Displays,* on page 25.

Programming examples for the basic programming mode are placed in *Basic Programming Mode Introduction.*

The configure sequence, used to tailor the sampler to your specific application, is discussed in *Configure Sequence,* on page 42.

The extended programming mode and several extended programming examples are discussed in *Extended Programming Mode,* on page 53.

Adjusting the sampler for foreign languages and metric units of measure is discussed in *Foreign Languages and Metric Units of Measure,* on page 72.

The standby state is discussed in *Standby State,* on page 88.

Run state is discussed in *Run State,* on page 94.

DESCRIPTION OF SAMPLING OPERATIONS

This information serves to acquaint you with the 3700FR Sampler's operation during a typical sampling routine. It introduces you to the types of sampling performed by the sampler and the terminology used to describe those capabilities.

SAMPLE EVENTS AND THE SAMPLING CYCLE

A sample event is the process of taking a sample or a series of samples. It includes the full sampling cycle. Although the sampling cycle varies somewhat according to the program settings which define the sampling routine, the cycle described here follows the typical sequence. This information is presented here to provide you with a frame of reference for the remainder of this chapter.

1. A sample event is initiated when the interval following the previous sample has expired. For time based intervals, the samples are taken when the internal clock reaches the time of the sampling event. For flow-paced intervals, the interval is set to the programmed number of pulses received from a flow meter or flow logger; the sample event begins when the pulses are counted down to zero.
2. When the time or pulse interval countdown reaches zero, the distributor moves to the bottle which is to receive the sample.
3. The pump rotates in the reverse direction for the pre-sample purge. The pre-sample purge is an air purge of the suction line and inlet which clears the line of any accumulated debris and residual liquid to avoid cross-contamination of samples.

4. The pump direction changes, pumping in the forward direction to fill the suction line up to the liquid detector.
5. After the suction line has been filled to the liquid detector and liquid has been detected, the sample volume measuring portion of the sampling cycle begins. The pump continues to rotate in the forward direction until the programmed volume of liquid has been delivered to the appropriate sample bottle. In this manual, the amount of liquid delivered to the bottle is referred to as the "sample volume."
6. The pump direction again changes, pumping in the reverse direction for the post-sample purge. Like the pre-sample purge, the post-sample purge is an air purge of the suction line. After the post-sample purge, the pump then shuts off.
7. The sample interval is reset and the cycle begins again at step 1.

TYPES OF SAMPLES

The 3700FR Sampler is principally designed to collect sequential (discrete) samples. However, it may be programmed to collect a number of other types of samples. As noted in Chapter 1, the 3700FR Sampler has two programming modes: basic and extended. The basic programming mode is used for conventional routines which include the types of sampling described and introduced in this section. A discussion of the types of sampling available through the extended programming mode is placed in *Types of Sampling Available Through the Extended Programming Mode,* on page 17 and *STORM Programming,* on page 19.

Sample types can be characterized by sample distribution and by sample pacing. Sample distribution is the order in which the samples are placed in the bottles. Sample pacing refers to the interval between samples.

Types of Sample Pacing

There are two types of sample pacing: time-pacing and flow-pacing. In time-paced sampling, the interval between samples is a time interval. In flow-paced sampling, the interval between samples is a certain volume of liquid which has passed a measuring point in a flow stream. Flow-paced sampling requires a flow meter or flow logger. The 3700FR Sampler can also be interfaced with certain non-Isco flow meters. The flow instruments measure the flow quantity and sends a pulse for every predetermined flow quantity to the sampler. The sampler totalizes the number of pulses received from the flow instrument and collects a sample when the total reaches a programmed number.

Types of Sample Distribution

There are two primary types of sample distribution: sequential and composite sampling. In a sequential sample, each bottle receives one sample. A sequential sample represents a "snapshot" of the flow stream at a particular point in time. **Figure 13** shows a diagram of sequential sample distribution. In a composite sample, the individual samples are combined – "composited" – into a single container. A composite sample represents an average of the characteristics of the flow stream over the total elapsed time of sampling.

Figure 13 Sequential Sample Distribution

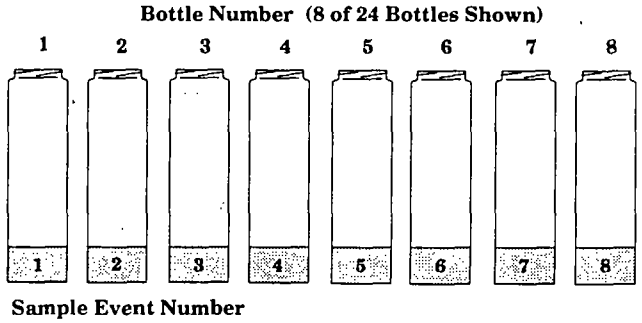

Note: The 3700FR Sampler is fully programmable for both sequential and composite sampling; however, in addition to programming the sampler for composite sampling, you must convert the sampler mechanically for single bottle compositing. This requires the composite conversion kit which contains the extra equipment needed to adapt the sampler for composite sampling. Conversion procedures are discussed in the instruction sheets provided with the conversion kit.

The types of sample pacing and sample distribution can be combined. Thus, you can take time- or flow-paced sequential samples and time- or flow-paced composite samples. Each combination is noted below.

Time-Paced Sequential: In a time-paced sequential sample, samples are collected at equal increments of time. Each bottle receives one sample.

Flow-Paced Sequential: In a flow-paced sequential sample, samples are collected at equal increments of flow volume, as measured by an associated flow meter. Each bottle receives one sample.

Time-Paced Composite: In a composite time sample, the individual samples are combined – "composited" – into a single container. Samples are collected at equal increments of time.

Flow-Paced Composite: In a composite flow sample, the individual samples are combined into a single container. Samples are collected at equal increments of flow volume, as measured by an associated flow meter.

Multiplexing

Both time-paced and flow-paced sequential samples can be multiplexed. Multiplexing places more than one sample in a bottle at different sample events or places a sample in several bottles at the same sample event. Two types of multiplexing are commonly used: samples-per-bottle multiplexing and bottles-per-sample multiplexing.

Samples-per-Bottle Multiplexing

In samples-per-bottle multiplexing, a number of individual samples are deposited in the same bottle. Samples-per-bottle multiplexing is useful when you need to collect a series of small composite samples. In sample-per-bottle multiplexing, the normal sampling cycle (relocate distributor, pre-sample purge, sample delivery, post-sample purge) is modified by altering the number of times the distributor is relocated. Because a bottle will receive more than one sample from more than one sample event, the distributor does not relocate to a new bottle at each sample event. At the first sample event, the distributor relocates, if necessary, to the appropriate bottle. The normal sampling cycle is completed. At the next sample event, the distributor does not relocate, and a second sample is deposited into the same bottle.

Figure 14 Samples-Per-Bottle Multiplexing

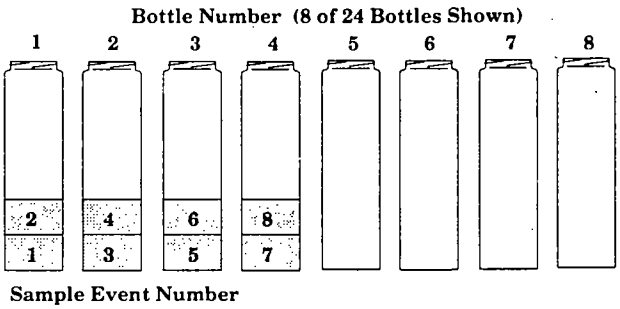

Compositing multiple samples continues up to the programmed number of samples. After the last sample is deposited in the bottle, the sampler pauses until another sample event occurs, the distributor then rotates to the new bottle position, and multiple samples are deposited into the new bottle. **Figure 14** illustrates sample-per-bottle multiplexing.

Bottles-per-Sample Multiplexing

In bottles-per-sample multiplexing, a programmed number of bottles is filled at each sample event. (The programmed number of bottles is called a bottle set; up to 24 bottles can be included in a set.) Bottles-per-sample multiplexing is useful when you need a sample larger than the 350 ml or 1000 ml bottles will contain. It is also useful when you need sets of identical samples; for example when you are using more than one preservative.

Figure 15 Bottles-Per-Sample Multiplexing

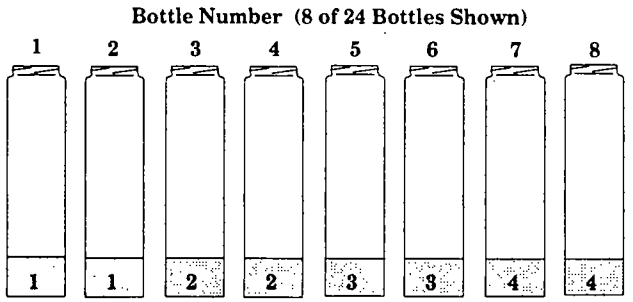

When you use bottles-per-sample multiplexing, the normal sampling cycle (relocate distributor, pre-sample purge, sample delivery, post-sample purge) is modified by delaying the complete post-sample purge until sample volumes have been delivered to each bottle of the set. Instead, the pump reverses until the pump tubing is purged just beyond the liquid detector. When the purged liquid passes the detector, the distributor moves to the next bottle, and the pump begins pumping forward to deliver the next sample. This is repeated until each bottle of the set is filled. A full post-sample purge is completed at the end of the sample event. The sampler then pauses until the next sample event occurs, at which time the cycle is repeated for the following bottle set. **Figure 15** illustrates bottles-per-sample multiplexing.

Types of Sampling Available Through the Extended Programming Mode

The extended programming mode expands the variations of sample pacing and distribution. The extended features listed below are used in more complex sampling routines.

Note, however, that the sampling capabilities described above, in *Types of Samples,* on page 16, are available in both the basic and the extended programming modes. STORM programming is available only in the extended programming mode.

Nonuniform Time Intervals

The 3700FR Sampler, through the extended programming mode, can take samples at nonuniform time intervals. With nonuniform time intervals, samples are taken at irregular time intervals, rather than at equal time intervals.

Nonuniform time intervals are typically used in run-off studies (often in conjunction with a Model 1640 Liquid Level Actuator). Nonuniform time intervals permit a number of samples to be collected at short intervals after a rainfall or other event occurs and remaining samples to be collected at widening intervals. For example, when the sampler is used with the Actuator in a runoff study, the Actuator turns the sampler on when the liquid level of the flow stream rises to contact the Actuator's probe. Nonuniform time intervals allow the sampler to collect samples frequently when the flow rate is highest, and to sample less frequently as the flow rate decreases. Nonuniform times can also be used to simulate flow-paced sampling; when the flow rate varies predictably, using nonuniform time intervals allows you to take samples at equal flow volumes. As the flow rate increases, you can take samples at equal flow volumes by decreasing the time interval. As the flow rate decreases, you can increase the time interval.

When you use nonuniform times, the time interval between each sample event is individually programmable. You can enter nonuniform times in two ways: in minutes or in clock times. The first method, minutes, allows you to enter the number of sample events spaced at intervals defined in minutes: 12 samples at 5-minute intervals, 6 samples at 10-minute intervals, 4 samples at 15-minute intervals, and so on. You can also enter a specific time and date for each sample event: sample event 1 at 6:00 on April 20, sample event 2 at 6:30 on April 20, sample event 3 at 7:15 on April 20, and so on. You can specify as many as 999 sample events spaced in nonuniform minutes, or up to 99 events specified as clock times. (If a routine requires a large number of nonuniform times, you can save the routine with the program storage feature so that you do not have to reenter the nonuniform times again.) Nonuniform time intervals can be used with sequential, multiplexed, and composite sampling.

Extended Multiplexing

Multiplexing is somewhat more flexible in the extended programming mode. In the extended mode, you can switch multiplexed bottles or bottle sets after a programmed number of samples have been deposited, or after a programmed period of time has elapsed. Under most conditions, we recommend you switch bottles or sets after a programmed number of samples have been deposited. This allows you to control the number of samples in each bottle precisely. When you switch bottles or sets on a time basis, the total volume of each bottle or bottle set may vary in samples-per-bottle or bottles-per-sample multiplexing.

Multiple Bottle

The extended programming mode offers a third multiplexing possibility: multiple bottle compositing. Multiple bottle compositing combines samples per bottle and bottles per sample multiplexing by depositing multiple samples in a bottle set. At each sample event, the sampler places a sample into each bottle of a set. This is repeated until each bottle of the set contains a programmed number of samples. **Figure 16** illustrates multiple bottle compositing. The bottle sets can be switched after a programmed number of samples have been deposited or after a programmed period of time elapses. Multiple bottle compositing is useful when you want a series of identical sets of samples or a larger volume composite sample than can be collected in a single 350 or 1000 ml bottle. Multiple bottle compositing can be used with time-paced or flow-paced routines.

Stops and Resumes

The extended programming mode allows you to create an intermittent sampling schedule. You can program the sampler to stop the routine at a specific time. The routine can then be resumed at a later time. Up to 12 stop times and 12 resume times can be entered. Stops and Resumes can be used with time-paced and flow-paced routines and with routines programmed for nonuniform time intervals.

Figure 16 Multiple Bottle Compositing

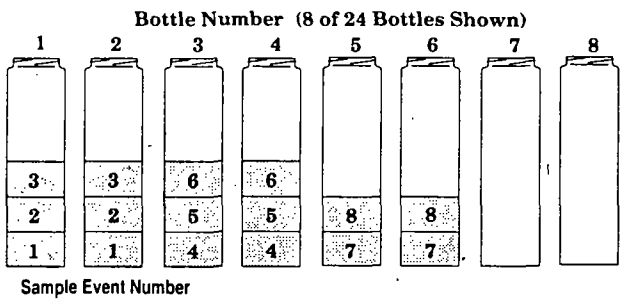

STORM Programming

The 3700FR Sampler's STORM programming allows you meet storm water monitoring requirements easily. The sampler's STORM pacing program divides the bottles of the 4, 12, and 24 bottle configurations into two separate groups. The first group receives a first flush (time-paced) grab sample. The second bottle group receives either a flow-paced or time-paced "composite" sample.

STORM Event Sample Distribution Schemes

A bottle group can consist of one or more bottles. Thus, the first flush sample can be a large sample delivered to a single bottle or distributed to several bottles with a multiplexing scheme. The remaining samples can be distributed to the second bottle group sequentially or according to any of the three available multiplexing distribution schemes — bottles-per-sample, samples-per-bottle, or multiple bottle compositing. By dividing the samples into multiple bottles, you can analyze the pollutant concentration from each phase of the storm event. To obtain an analysis of a composite sample, simply combine the contents of the bottles into a composite for the grab sample and a composite for the flow-weighted samples.

Figure 17 shows a STORM distribution scheme that combines time-paced bottles-per-sample multiplexing with flow-paced samples-per-bottle multiplexing. The program has allocated bottles 1, 2, and 3 for the timed grab samples, and bottles 4 through 24 for flow-weighted samples. At each time-paced sample event, the sampler places a single sample in the first bottle group: bottles 1, 2, and 3. Each bottle of the second group receives two samples per bottle.

If you need to obtain a greater number of samples or a larger volume of samples than a single sampler will permit, use the master/slave option. The master/slave option allows you to use the first sampler to acquire a set of samples based on STORM programming and the second (slave) sampler to continue the sampling.

Figure 17 Storm Distribution Scheme

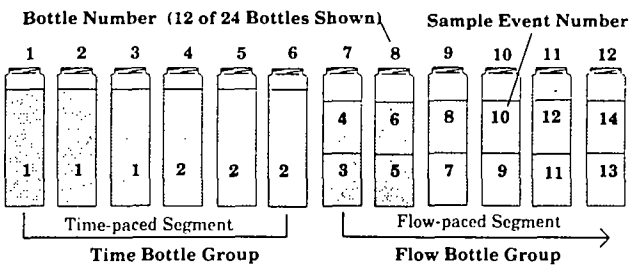

Programming Introduction

The sampler's programming process is self-prompting. Prompts displayed on the LCD step you through the programming sequence in a logical order, indicating the needed value or option. For example, the sampler will prompt you to enter settings for the interval between samples (time-paced or flow-paced); sample volume in ml; determine whether you want sequential, composite, or multiplexed samples; and other operating controls. These settings can be changed at any time. If the unit is turned off or power is disconnected, the settings are retained in the sampler's memory by the lithium battery. The sampler will accept only appropriate values for the program settings and will reject any unacceptable values.

Operating States

Although there is a certain amount of overlap between the types of operations the sampler performs, there are essentially three operating states: the standby state where the sampler is waiting for your instructions, the run state where the sampler is running a sampling routine, and the interactive state used to program the sampler. Each state serves a different purpose and is discussed separately.

Standby State

In the standby state, the sampler is waiting for your instructions. From standby, you can start a sampling routine, placing the sampler in the run state. You can also access the interactive state to program it. The standby state is discussed in *Standby State,* on page 88.

Run State

In the run state, the sampler's sampling routine is being executed and the sampler is operating under program control. While the sampling routine is executed, the LCD displays a number of messages to communicate the progress of the sampler through the routine. The current bottle or bottle set, current time or flow pulse count, and remaining time or pulse count to the next sample are reported. These status messages vary according to the sampling routine; a representative set of messages are included with the programming examples placed in *Basic Programming Procedure,* on page 27 and *Start Times,* on page 57.

As the routine progresses, the sampler creates a log of sampling results that records pertinent information about each sample event. The results include the time and date of each sample, the number of pump counts occurring until liquid is detected for each sample event, and any problems encountered.

This information can be retrieved with the Display Status procedure, discussed in *Display Status,* on page 91. You can retrieve the results in the middle of a routine or when the routine is done. The results remain in the sampler's memory until you start the sampler again. More information on the run state is placed in *Run State*.

INTERACTIVE STATE

The interactive state allows you to program the sampler. The interactive state contains two branches: the program sequence and the configure sequence. **Figure 18** diagrams the structure of the interactive state. The program sequence is used to define the sampling routine; it allows you to enter the interval between samples, the number of samples in each bottle, the sample size, and the start time. The configure sequence provides a number of setup options. Some configure options provide equipment specifications. For example, the 3700FR Sampler can be used with two sizes of sequential bottles: 350 ml and 1000 ml. You must tell the sampler which bottle size you are using so that it can calculate the number of samples of a certain size each bottle can contain. This information is used to prevent overfilling. Other options allow you to set the sampler's real time clock, calibrate the sampler, or enable the password program protection.

Programming Modes

The configure sequence also allows you to select either of the programming modes: basic or extended. The basic programming mode is used for conventional sampling routines. Using the basic programming mode, you can take sequential or composite samples at uniform time intervals or flow pulse intervals. You can multiplex samples, if desired; both bottles-per-sample and samples-per-bottle multiplexing are available.

Extended Programming

The extended programming mode increases the number of available features. These features make more complex sampling routines possible. While all basic programming features are available in the extending programming mode, the less frequently used extended features have been separated to simplify the programming process for conventional routines. For example, you can use STORM programming, multiple bottle compositing, or create an intermittent sampling schedule with the Stops and Resumes feature.

Although the basic and extended program sequences vary in detail, both can be divided into four sections: Sample Pacing (interval between samples), Sample Distribution (number of samples in each bottle), Sample Volume (sample size in ml), and Key Times (start times or, in the extended mode, stop and resume times). These sections are noted in the Program Sequence section of the diagram shown in **Figure 18,** on page 21.

Configure Sequence

The program sequence and the configure sequence are interdependent. The selections you make in the configure sequence determine what settings will be available to you in the program sequence. For example, the basic or extended programming modes are selected in the configure sequence as a setup option. When you select the extended programming mode, the program sequence is modified to accommodate the extended features by adding one or more input displays. For example, because Nonuniform Times are an extended programming feature, the nonuniform times input displays are available in the Sample Pacing program section in the extended programming mode, but not in the basic programming mode.

The extended programming mode not only extends the number of features available in the program sequence, it extends the number of configure options. Refer to **Figure 18**. The configure options marked with asterisks are available only when you select the extended programming mode. As in the programming sequence, less frequently used options have been separated to simplify the configuration process.

Most configure options are available to both programming modes. The configure sequence contains 18 options which are summarized in **Table 3,** on page 21; each option is marked as available in both modes or available only in the extended mode. A detailed discussion of each configuration option is found in *Set Clock,* on page 42 and through *Exit Configuration,* on page 53.

It is usually not necessary to change the configure option settings unless the sampling application changes significantly. The sampler is always programmed and configured: program and configure settings are maintained by the sampler's internal battery. The sampler is shipped with factory program and configure settings. It is configured for the basic program mode and for the bottles and suction line ordered with the sampler. **Table 7,** on page 55 lists the factory settings for the program sequence; **Table 6,** on page 54 lists the factory settings for the configure options.

Figure 18 Interactive State Structure

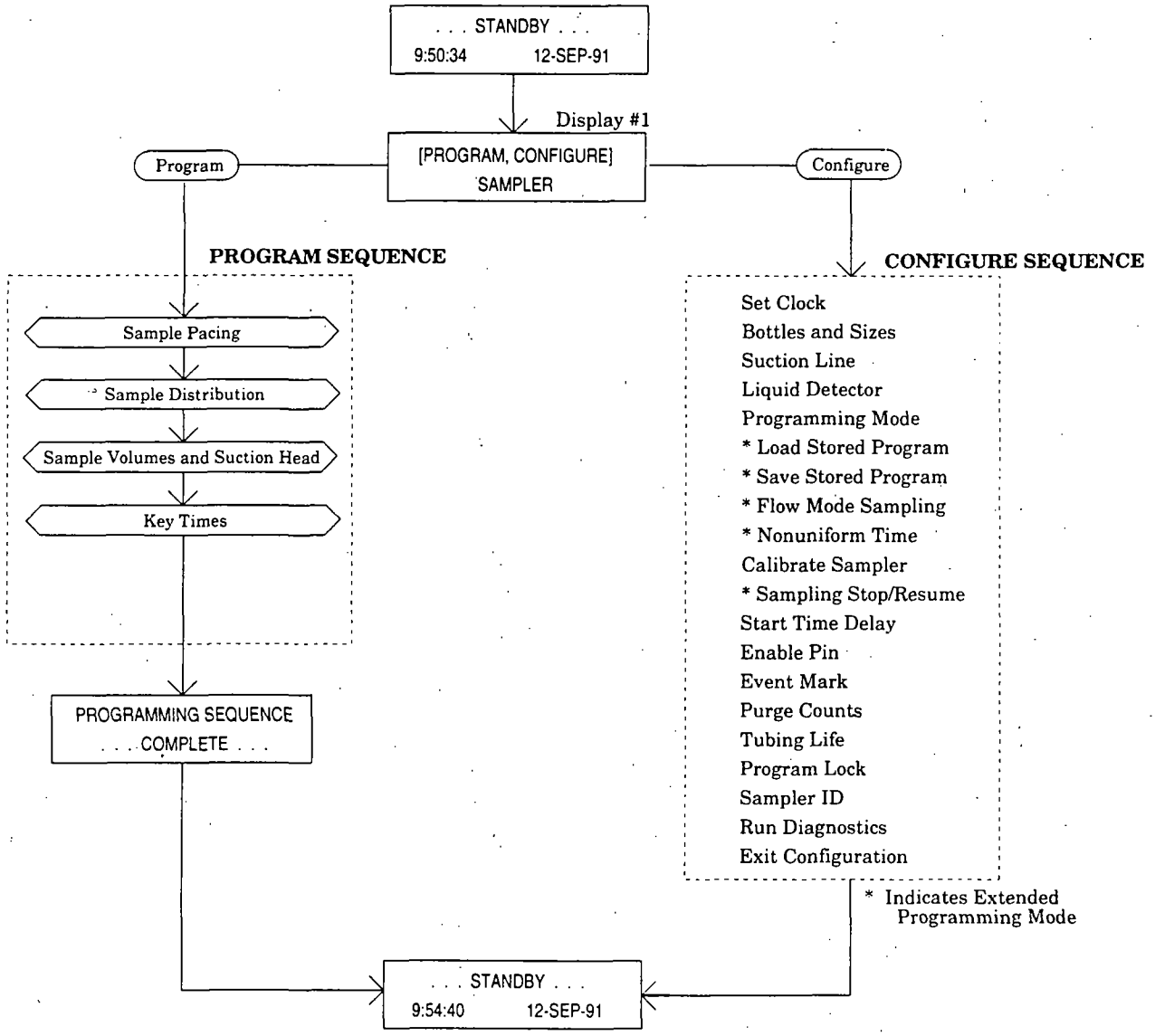

Table 3 Configure Option Functions

Configure Option	Programming Mode	Function
Set Clock	Basic & Extended	Sets the sampler's real time clock.
Bottles and Sizes	Basic & Extended	Sets the number and size of bottles used in the tub.
Suction Line	Basic & Extended	Sets the type of line (vinyl or Teflon), line diameter (1/4 or 3/8 inch), and line length (3 to 99 ft).
Liquid Detector	Basic & Extended	Enables/disables liquid detector, sets the number of rinse cycles (0 to 3), enables/disables the suction head entry, and sets the number of sampling retries (0 to 3).
Programming Mode	Basic & Extended	Sets the programming mode: basic or extended.
Load Stored Program	Extended	Loads one of up to three previously saved sampling programs.
Save Current Program	Extended	Saves current sampling program.
Flow Mode Sampling	Extended	Directs sampler to take a sample at the beginning of a flow-paced program. Directs sampler to take a sample at time-switches.

Configure Option	Programming Mode	Function
Nonuniform Time	Extended	Directs sampler to accept nonuniform intervals as specific clock times or in minutes.
Calibrate Sampler	Basic & Extended	Enables/disables the calibration sequence.
Sampling Stop/Resume	Extended	Enables/disables Sampling Stops and Resumes feature.
Start Time Delay	Basic & Extended	Sets the start time delay (from 0 to 9999 minutes). If no start time is entered in the program sequence, the program will delay the routine according to the amount of time entered in the Start Time Delay option. The delay begins after the start sampling key is pressed.
Enable Pin	Basic & Extended	Enables/disables the master/slave sampling mode. Directs the sampler to take a sample when disabled and/or enabled by a Liquid Level Actuator or like device. Allows you to restart the sampling interval when the sampler is enabled.
Event Mark	Basic & Extended	Allows you to select one of four types of event marks.
Purge Counts	Basic & Extended	Adjusts the number of pre-sample and post-sample purge counts.
Tubing Life	Basic & Extended	Displays the pump tubing life information. Resets the tubing life count.
Program Lock	Basic & Extended	Enables/disables the password protection for input displays.
Sampler ID	Basic & Extended	Allows you to enter a 10 character ID number for the sampler.
Run Diagnostics	Basic & Extended	Tests the RAM, ROM, pump, and distributor. Allows for re-initialization of certain program and configure settings.

INTRODUCTION TO THE PROGRAMMING PROCEDURE

The procedure used to program the sampler, in the basic programming mode, essentially follows the steps listed below.

Note: because the configuration settings determine portions of the program sequence and affect the accuracy of the sample, check the configuration settings before programming. Steps 2 and 3, configuring and programming the sampler, are covered in greater detail in *Basic Programming Mode Introduction,* on page 26, and in programming **Example 1,** on page 29 through **Example 7,** on page 41.

1. Determine the equipment you will be using with the sampler. You will need to know the size of the bottles you will be using and the inside diameter, type, and length of the suction line. You will need this information when you verify and revise the configuration settings in step 2.

   If you will be using the sampler for composite sampling, you may need to convert the sampler. **Example 6,** on page 39 demonstrates the configuration changes you must make.
2. Configure the sampler. From standby, access the interactive state. Select the configure sequence. Check the configuration settings, revising any settings as needed; select basic or extended programming mode. Return to the standby state.

   Example 1, on page 29 shows you how to check and revise the configuration settings in the configure sequence. We recommend you review *Keypad Description,* on page 23 and *Displays,* on page 25 before you work through the programming examples. These sections discuss the functions of the individual keys and how to use the keys when programming the sampler.
3. Program the sampler. Again, from standby, access the interactive state. Select the program sequence. Enter the program settings for your routine. The sampler will prompt you through the programming process. When the process is completed, the sampler will automatically return to standby. (A more detailed discussion of this procedure is placed in *Basic Programming Mode Introduction,* on page 26). **Example 2,** on page 32 through **Example 7,** on page 41 demonstrate several types of sampling programs in the basic mode. **Example 10,** on page 74 through **Example 17,** on page 86 demonstrate several sampling programs in the extended mode.
4. Install the sampler, if you have not already done so. (The sampler can be programmed on site or in the office before installation.) If desired, connect the sampler to a flow meter or other interfacing equipment. Chapter 2 discusses the installation of the sampler and interfacing equipment. Start the sampler to place the sampler into the run state and execute the routine.
5. As the routine runs, the displays will report the sampler's progress. The programming examples in this manual conclude with the run state displays you should see for each sampling routine. When the routine is done, the sampler will return to standby.

6. Retrieve the filled sample bottles. If desired, use the display status procedure, discussed in *Display Status,* on page 91, to examine the sampler's log of sampling results.
7. If you need to reprogram the sampler, follow this procedure from the beginning. If the sampler's current program is correct, start the sampling routine again.

Using the Keypad to Respond to Displays

Configuring and programming the sampler is as simple as responding to displays with the keypad. The sampler will prompt you through many of the entries by presenting a question or a choice on the display. You must respond with the keypad. The LCD and the keypad are located on the 3700FR Sampler control panel, shown in **Figure 19**.

A summary of each key's function is placed in *Keypad Description,* on page 23. For a discussion of the displays presented on the LCD and the way you can use the keypad to interact with the sampler, refer to *Displays,* on page 25.

Keypad Description

Keys are grouped together to assist you in identifying related functions. Control keys manually control the sampler, numeric keys enter program values, programming keys monitor the sampler's status and direct programming activities. In this manual, individual keys are indicated in small capital letters.

The individual key switches that make up the keypad provide both tactile and audio feedback to assure you that the key switch has been successfully actuated. You can feel the deflection of the spring member in the switch; an audio indicator inside the sampler will beep once. The sampler has a 10-keystroke buffer which, in some cases, allows you to "type ahead" of the display.

Control Keys

Control keys allow you to turn the sampler on or off, start or resume the currently entered program, and control the sampler manually. The functions of the control keys are listed below.

ON/OFF - Pressing the ON/OFF key when the sampler is off will turn the sampler on, reactivate the display and place the sampler in the standby state. Pressing the ON/OFF key (when the sampler is on) will halt all sampling activity and clear the display.

PUMP FORWARD - While in the standby state, pressing the PUMP FORWARD key will cause the pump to run continuously in the forward direction. The pump will run until the STOP key is pressed.

PUMP REVERSE - While in the standby state, pressing the PUMP REVERSE key will run the pump continuously in reverse. The pump will continue to operate until the STOP key is pressed.

STOP - The STOP key will stop the pump any time it is running. When the STOP key is pressed in the run state, the sampling routine will be halted, the sampler will be transferred to the standby state, and the "PROGRAM HALTED" message will be displayed. Pressing the STOP key while in the interactive state will access the display's reference number.

START SAMPLING - When in the standby state, pressing the START SAMPLING key will begin the sampling program. When entering a sampler ID, the key will type a space.

RESUME SAMPLING - When "PROGRAM HALTED" is displayed, pressing the RESUME SAMPLING key will cause the sampler to continue with the current sample program at the point at which it was halted. When entering a sampler ID, the key will type a period

MANUAL SAMPLE - Pressing the MANUAL SAMPLE key will allow you to take a manual sample. The MANUAL SAMPLE key is valid in the standby state, the run state, and when calibrating the sampler. When entering a sampler ID, the key will type a dash (-).

NEXT BOTTLE - Pressing the NEXT BOTTLE key will cause the distributor to move to the next bottle. If the distributor is positioned over the last bottle, it will move to bottle position 1.

Program Keys

The four program keys are used to enter program settings. Each key's function is listed below.

DISPLAY STATUS - While the sampler is in the standby or run state, pressing the DISPLAY STATUS key will allow you to view the program settings or the sampling results.

EXIT PROGRAM - Pressing the EXIT PROGRAM key while in the program sequence will return the sampler to standby. Pressing the EXIT PROGRAM key while in the run state will halt the program; the message "PROGRAM HALTED" will be displayed.

CLEAR ENTRY - When entering a number, the CLEAR ENTRY key can be used to return to the original entry.

ENTER/PROGRAM - Pressing the ENTER/PROGRAM key, while in the standby state, will cause the sampler to enter the interactive state. While at an input display, pressing the ENTER/PROGRAM key will accept an entered value or a blinking option, and direct the sampler to proceed to the next step. Input displays are discussed in *Displays,* on page 25.

Figure 19 3700FR Sampler Control Panel

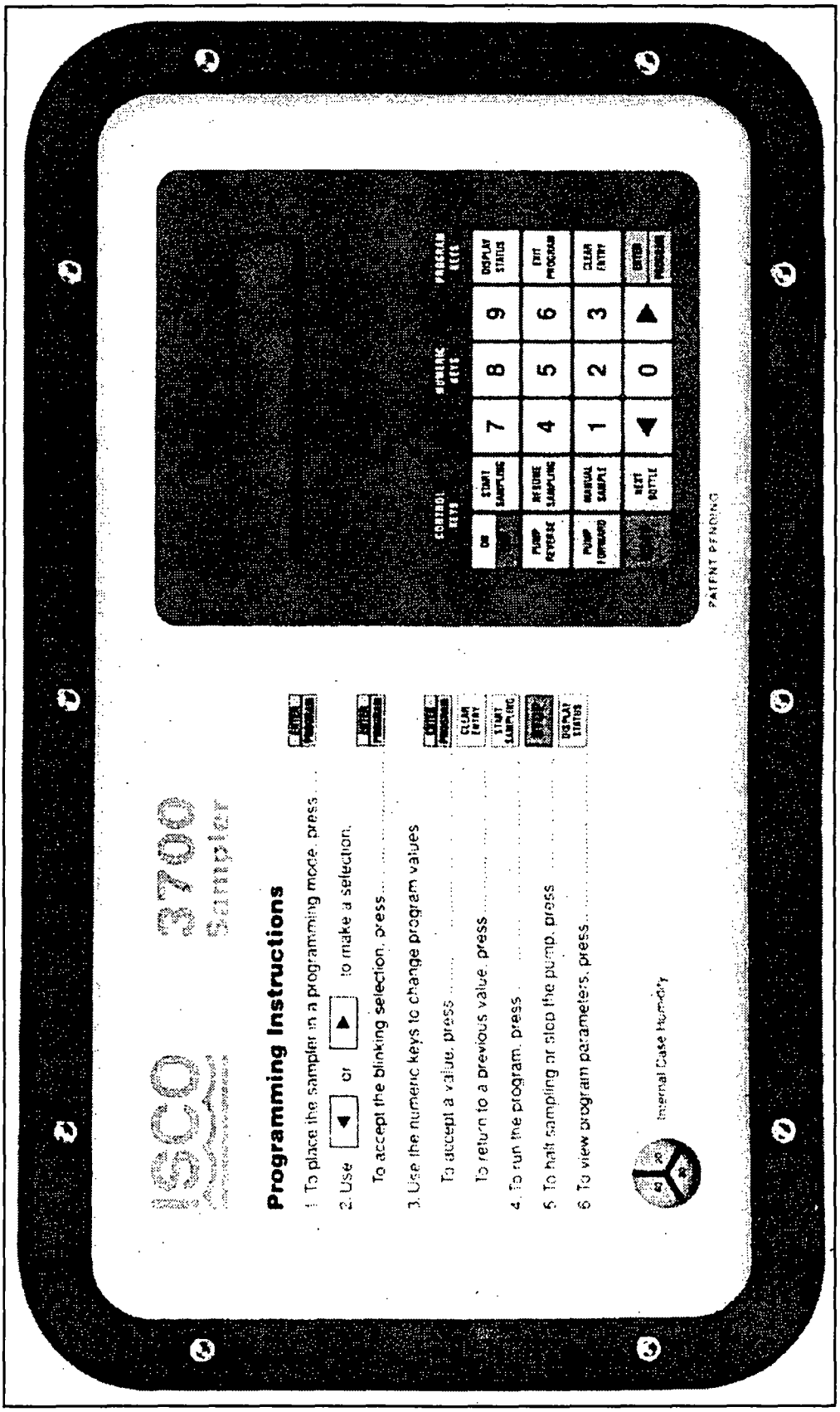

Numeric Keys

The numeric keys consist of 10 digit keys, a LEFT ARROW key, and a RIGHT ARROW key. The digit keys are used to enter quantities. The ARROW keys are used to move through lists or program options.

LEFT ARROW - The LEFT ARROW key is used to select one of two or more program options displayed when the sampler is in the interactive state. When more than one numeric entry is displayed – for example, the hours and minutes of a time setting – the LEFT ARROW can be used to step back to a previously entered value. When entering a number, the LEFT ARROW can be used to erase the most recently entered digit.

RIGHT ARROW - The RIGHT ARROW key is used to select one of two or more program options displayed in an input display. It is also steps through status information.

DISPLAYS

There are two types of displays: displays which communicate information about the sampler's status and displays which request input. In many cases, you must respond with the keypad.

Informational Displays

Informational displays communicate information about the sampler's status. For example, when the sampler completes a sampling program, a display similar to the illustration below appears. It communicates the sampler's status, "DONE," the number of samples taken (which will vary according to the program), and the current time and date.

```
DONE... 24 SAMPLES
10:32:34  14-JUN-91
```

Input Displays

Input displays can be identified easily because they contain a blinking word or number. The blinking word or number serves as a prompt for input and is said to be "selected." When the input displays shown below first appear, the word "PROGRAM" (display a) and the sample volume entry "250" (display b) will be blinking. Blinking words or numbers are represented in illustrations with OUTLINE characters.

```
[PROGRAM, CONFIGURE]
SAMPLER
```
a

```
SAMPLES VOLUMES OF
250 ml (10-1000)
```
b

Display Numbers

Nearly all input displays have a number assigned to them. The number is used to cross reference the input displays with a explanatory listing found in Appendix A - Display Index or in the 3700R/3700FR Sampler Pocket Guide. If you have a question about a given input display, you can easily locate the description of the display with the display number.

The display number can be accessed by pressing the STOP key when viewing the input display in the interactive and standby states. (In the run state, the STOP key is used to halt the sampling program.) To see the display number, press the stop key, read the number from the display, then look up the corresponding number in *Appendix B Display Index*, on page 138 for information on that display. The display number for display is "1."

Displays With Choices

There are two types of input displays: displays which prompt you to make a choice (between time-paced and flow-paced sampling, for example) and displays which prompt for numeric input (sample volume, for example). In displays which prompt you to make a choice, you must select one of up to four alternatives placed in brackets.

For example, display a above prompts you to select the program or the configure sequence. The choices, "PROGRAM" and "CONFIGURE," are placed in brackets.

When an input display prompting for a choice first appears, the blinking word indicates the currently selected choice. If the blinking word is acceptable, press the ENTER/PROGRAM key. If the blinking word is not acceptable, select the preferred choice by pressing the LEFT ARROW or RIGHT ARROW key until the preferred choice is blinking; then press the ENTER/PROGRAM key. The sampler will store the selected choice and advance to the next step.

When the display illustrated in a appears, the word "PROGRAM" will be blinking. If "PROGRAM" is acceptable, press the ENTER/PROGRAM key. If "PROGRAM" is not acceptable, press the LEFT ARROW or RIGHT ARROW key until "CONFIGURE" is blinking. Then, press the ENTER/PROGRAM key. The ENTER/PROGRAM key directs the sampler to advance to the next step.

Numeric Input Displays

A numeric input display will prompt for input by blinking the currently stored number. In the display illustrated in b, the number "250" will blink to prompt you to enter a value.

If the blinking number is acceptable, it is not necessary to type the number again: pressing the ENTER/PROGRAM key will store the number and advance the program to the next step. To enter a new number, press the appropriate numeric keys, then press the ENTER/PROGRAM key.

The sampler will not accept a number that exceeds the allowable range of values placed in parentheses on the display. In illustration b, no less than 10 ml and no more than 990 ml can be entered as a sample volume. If an entered number exceeds the range, the sampler will emit a series of beeps and the original number will reappear. An acceptable value must be entered to advance to the next step.

Editing Numbers

The LEFT ARROW key and CLEAR ENTRY key can be used to edit numeric entries if they are used after you press a numeric key and before you press the enter/program key. The CLEAR ENTRY key will clear any typed number and the original number will reappear. The LEFT ARROW will erase the most recently typed number.

Some numeric input displays prompt for more than one value. In the illustration below, the prompt asks for five number entries: hours, minutes, month, day, and year. The LEFT ARROW key and RIGHT ARROW key can be used to move back and forth between each of the five entries. Individual entries can be changed, as discussed above. Pressing the RIGHT ARROW or ENTER/PROGRAM key on the last entry will store the values and advance to the next display.

HH:MM	DD-MM-YY
12:33	21/06/91

Military Times

Times must be entered in military format. For example, to set the sampler's clock to 3:30 pm, enter a time of 15:30. When the display above first appears, the first two digits, "12," will blink. To enter a new time, type in the new hour, "15." Store the hour entry and advance to minutes by pressing the ENTER/PROGRAM key. Although months are displayed with a three-letter abbreviation, you must enter the month as a number. If the month or year entry does not need to be changed, accept the entry by pressing the RIGHT ARROW or ENTER/PROGRAM key. The LEFT ARROW key can be used to return to a previous position. Pressing the RIGHT ARROW or ENTER/PROGRAM key on the last entry, "91," will store the value and advance to the next display.

European Date Format

The sampler uses the European date format where the day precedes the month's three-letter abbreviation. To enter a date, enter the day before the month's number, and the year. The sampler will convert the numeric entry to the three-letter abbreviation for you.

Exit Program Key

The user can exit an input display by pressing the EXIT PROGRAM key. If you use the EXIT PROGRAM key, the currently stored setting will not change.

BASIC PROGRAMMING MODE INTRODUCTION

The *following* examples demonstrate the steps used to check the configure option settings and program the sampler for several different sampling routines. They are designed to provide you with step-by-step procedures and are provided as models for you to use later when programming the sampler for your "real" applications. Each programming example concludes with the run state displays that appear while that routine is being executed. These displays can be used to monitor the sampler's progress through a routine.

Two Sets Of Examples

There are two sets of examples. Examples for the basic programming sequence are provided in **Example 2,** on page 32 through **Example 7,** on page 41. Because many of the features of the extended programming mode are affected by selections made in the configure sequence, examples for the extended programming sequence follow *Basic Programming Mode Introduction,* on page 26, which discusses each configure option separately. We recommend you become familiar with the basic programming mode procedure and basic programming examples before using the extended programming mode. Most of the procedures used in the extended programming mode duplicate those of the basic programming mode and are not repeated in the section on extended programming procedures.

Examples for both programming modes are accompanied by flow charts. These charts diagram the program sequence structure for each mode. **Figure 20** charts the Basic Programming Mode structure.

Figure 25, on page 65 charts the structure of the Extended Programming Mode. The charts are provided to act as a "map" to the programming process. Both charts are divided into sections - Sample Pacing, Sample Distribution, Sample Volume, and Key Times - which correspond to the steps listed in *Basic Programming Procedure,* on page 27.

Each chart contains the input displays used in the sequence. The input displays, in turn, are labeled with their display number so they can be cross-referenced with the listing found in *Appendix B Display Index,* on page 138. When programming the sampler, the display number can be accessed by pressing the STOP key.

As noted earlier, the sampler is shipped with a test program and factory configuration settings. The examples in this manual assume that all factory settings are being used, that the sampler will use the 24 bottle base, and that a 10 foot length of 3/8 inch vinyl suction line is being used.

Most program and configure settings can be re-initialized to factory settings, if desired. **Tables 6** and **7**, starting on page 54, list factory settings. A discussion of the re-initialize option, located in the Run Diagnostics configure option is found in *Run Diagnostics,* on page 52. Instructions for re-initializing the sampler are also included as part of **Example 1,** and **Example 2** provides detailed instructions to help you work through the procedures detailed in *Basic Programming Procedure.*

BASIC PROGRAMMING PROCEDURE

The steps needed to program the sampler in the basic mode follow the procedure outlined below.

1. Turn the sampler on with the ON/OFF key. The sampler always "wakes up" in the standby state. The "STANDBY" message will appear; or, if the sampler were turned off while running a routine, the "PROGRAM HALTED" message will be displayed. Both messages indicate the sampler is in standby.
2. Press the ENTER/PROGRAM key to access the interactive state. Select the program sequence. Refer to **Figure 20** for displays noted in steps 3 - 6. During the programming procedure, if you want to return to a previous display; press the EXIT PROGRAM key. The sampler will return to standby and you can repeat steps 1 and 2. Then press the ENTER/PROGRAM key to scroll through the settings until you locate the display in question.
3. Enter the Sample Pacing settings. The sampler will prompt you to select either time- or flow-pacing. Depending on your selection, you will then be prompted to enter the time interval between samplers, or the flow pulse interval.

   Note: If you will be using very short sample intervals, be sure the interval is longer than the duration of the sampling cycle. The duration of the cycle can be determined by programming the sampler with the desired settings, pressing the MANUAL SAMPLE key, and simply timing the cycle. For truly representative sampling, the interval – in either time- or flow-paced sampling – should be longer than the duration of the sampling cycle. If the intervals are too short, no sample events will be missed, although some events will occur at improper times.

   When programming the sampler for flow pacing, you must enter the number of pulses that make up the flow interval. If the flow meter has been set to send a pulse once every 1000 gallons, you can program the sampler to collect a sample once every 1000 gallons by entering a flow pulse interval of "1." To collect a sample once every 50,000 gallons, you would enter a sample interval of 50 pulses. *Appendix C Calculating Flow Increment Between Samples,* on page 147 provides a discussion of some of the calculations needed when determining flow pulse intervals.
4. Enter the Sample Distribution settings. The settings in the Sample Distribution section allow you to perform sequential or multiplexed sampling. The first display of the Sample Distribution program section asks you if you want to multiplex samples or not. If you want simple sequential sampling – one sample per bottle – select "NO." The sampler will then prompt you for the Sample Volume settings.

   If you want to use bottles-per-sample or samples-per-bottle multiplexing, select "YES." The next display will prompt you to select, "BOTTLES PER SAMPLE" or "SAMPLES PER BOTTLE."

   Bottles-per-sample multiplexing is useful where a sample volume greater than the capacity of a single bottle is required, or where various types of preservatives must be added to the samples. Samples-per-bottle multiplexing is useful when it is desirable to collect a series of small composite samples. For example, four samples at 15 minute intervals can be collected in each bottle, resulting in a series of hourly composite samples. *Types of Samples,* on page 16 discusses the various types of multiplexing.
5. Enter the Sample Volume settings. The Sample Volume program section will always contain prompts for the sample volume. Depending on the selections made in the configure sequence, it may contain prompts for the suction head and for calibrating the sampler.

   When entering the sample volume, the ± 10 ml sample volume repeatability should be kept in mind (refer to **Table 1,** on page 6). Because the sample volume programmed is a "nominal" value, it is prudent to enter a total sample volume which is somewhat less than the volumetric capacity of the bottle, as a safety factor. This will minimize the effects of cumulative error. Refer to *Bottles and Sizes,* on page 42 for notes on cumulative error and bottle size.

Figure 20 Basic Programming Mode: Program Sequence Structure

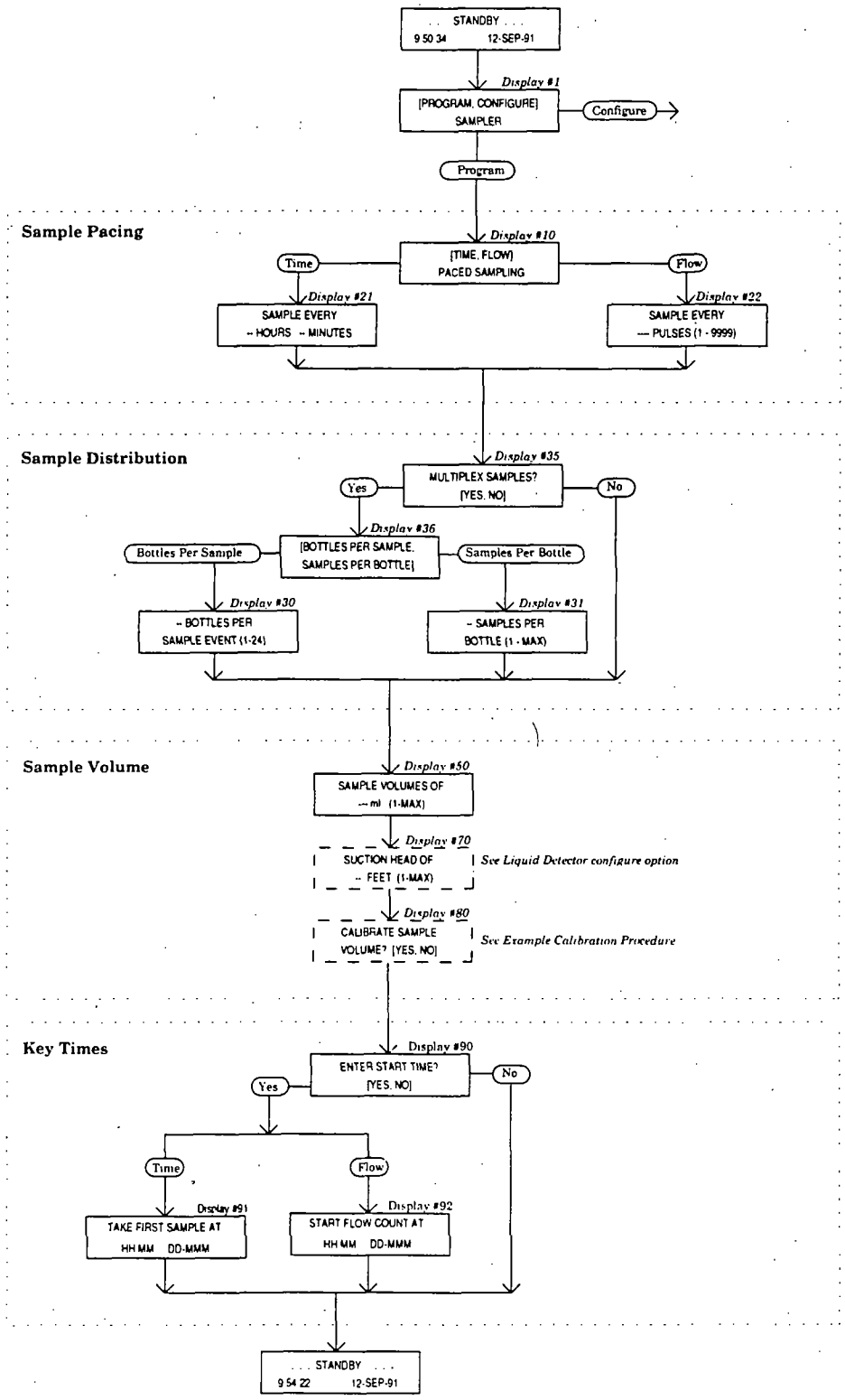

If bottles-per-sample multiplexing is being used to add preservatives to a number of consecutive samples, be sure to take the volume of the preservative into account.

The sampler can be configured, through the Liquid Detector configure option, to add the suction head setting to the program sequence. The suction head display will appear after you enter the sample volume. However, when the head is unknown or variable, the suction head setting should be omitted by disabling the suction head setting in the Liquid Detector configure option. By disabling the setting, you allow the liquid detector to determine the operating suction head each time a sample is taken. If the Liquid Detector is disabled, the suction head is automatically added to the program sequence and you are required to enter the suction head.

If you want to calibrate the sample volume, the calibration option must be enabled. To enable this option, select "ENABLE" in the Calibrate Sampler configure option. (Refer to *Calibrate Sampler,* on page 49). Enabling the option will add the calibration displays to the Sample Volume program section. These displays are included in **Example 7,** on page 41 which demonstrates the calibration procedure.

6. Enter the Key Times settings. In the basic programming mode, you will be asked if you want to enter a start time for the routine. If you select "YES," you will be prompted to enter a specific start time and date. If you select "NO," the sampler will use the start time delay. The start time delay can be set from 0 to 9999 minutes in the Start Time Delay configure option (see section 3.2.4.12). When you select "NO," the routine will start according to the delay setting in the Start Time Delay configure option. *Start Times,* on page 57 contains an extensive explanation of the sampler's start times.

   When the sampler is operating under factory configuration settings, the first sample will be taken at the start time for time-paced sampling. This is true whether you enter a specific start time and date, or if you use the start time delay. For flow-paced sampling, however, the flow pulse countdown will begin at the start time and the first sample will be taken when the countdown reached zero. Refer to the discussion on the Enable Pin option in *Enable Pin,* on page 50 for additional information.
7. The sampler will automatically return to standby.
8. From standby, start the routine by pressing the START SAMPLING key. This places the sampler into the run state. You will be prompted to enter the starting bottle number. If you want to begin with bottle 1, press the ENTER/PROGRAM key. If you make no response within 60 seconds, sampler will automatically begin with bottle 1. If you happen to start the routine after the programmed start time, the sampler will allow you to reprogram the start time. For more information, see *Standby State,* on page 88.
9. Use the run state displays to monitor the sampler's progress.

Example 1 Checking the Configure Option Settings

Before programming the sampler – especially if you are unfamiliar with the settings used in the previous routine, or if you think the settings have been changed – you should verify the configure option settings. You must change the settings if they do not match the number or size of the bottles, or the suction line used with the unit. The entries suggested in this example configure the sampler for 24 1000-ml bottles, a 10-foot length of 3/8-inch vinyl suction line, enable the liquid detector, and select the basic programming mode among other settings. Procedures for reinitializing the program settings and configure options to factory settings are placed in steps 22 through 26.

Not all configure options are discussed in this example; however, the options noted in this example include all the configure options which are not reinitialized to factory settings when the reinitialization process is run.

Step No.	Display	Procedure
1	...STANDBY... 10:34:50 19-JUN-91	If the sampler is not already on, press the ON/OFF key to turn it on. The standby display shown here will appear. Press the ENTER/PROGRAM key to access the interactive state. The next display you'll see is shown in step 2.
2	[..., CONFIGURE] SAMPLER	Access the configure sequence by selecting "CONFIGURE." Select "CONFIGURE" by pressing the RIGHT ARROW key once. When "CONFIGURE" blinks, accept the selection by pressing the ENTER/PROGRAM key.

Step No.	Display	Procedure
3	SELECT OPTION: (← →) SET CLOCK	Press the LEFT ARROW or RIGHT ARROW key to scroll through the configure options. The first option displayed is the Set Clock configure option. If the time displayed on the LCD in the standby message is not correct, reset the time with the Set Clock configure option. Access the Set Clock input display by pressing the ENTER/PROGRAM key.
4	HH:MM MM/DD/YY :35:20 19-JUN-91	Use this display to reset the time. This display requires five entries. The LEFT ARROW and RIGHT ARROW key can be used to move back and forth between each of the five entries. Use the ARROW keys until the entry you want to change blinks. Type in the new entry. Press the ENTER/PROGRAM key to accept the new entry. Pressing the RIGHT ARROW or ENTER/PROGRAM key on the last entry will store the values and advance to the next display.
5	SELECT OPTION: (← →) BOTTLES AND SIZES	To verify the Bottles and Sizes settings, press the ENTER/PROGRAM key. The display shown in step 6 will appear.
6	[PORTABLE, REFRIG.] SAMPLER	The 3700 Series portable and refrigerated samplers use the same controller. Because the 3700FR Sampler is a refrigerated sampler, select "REFRIG." Accept the selection by pressing the ENTER/PROGRAM key.
7	[1, 2, 4, 8, 12, 24] BOTTLES	For the purposes of this example, select "24" when you are using the 24 bottle base. Use the ARROW keys until "24" blinks, then press the ENTER/PROGRAM key. Select "1" when you are using a single bottle for composite sampling. NOTE: The 12 bottle configuration is available for Isco's fiberglass refrigerated samplers only.
8	BOTTLE VOLUME IS ml	Enter the bottle size here. Enter "350" for the 350 ml glass bottles, "1000" for plastic bottles. Press the ENTER/PROGRAM key. If you enter a number that exceeds the standard bottle size, the message, "WARNING: STANDARD BTL VOLUME EXCEEDED!", will be displayed for a short time. The sampler will then prompt you to confirm the volume entered. This prompt is displayed in step 9.
9	1001 ml! ... ARE YOU SURE? [YES,]	Select "YES" if you want to use the non-standard bottle volume. Select "NO" if you want to revise the entry. The display shown in step 8 will reappear; use it to enter the revised bottle volume. Press the ENTER/PROGRAM key to accept the entry and advance to step 10.
10	SELECT OPTION: (← →) SUCTION LINE	Press the ENTER/PROGRAM key at this display to access the Suction Line input displays shown in steps 11 - 13.
11	SUCTION LINE ID IS [1/4,] INCH	Select "1/4" if you are using 1/4 inch suction line, "3/8" if you are using 3/8 inch suction line. Press the ENTER/PROGRAM key to accept the entry and advance to the next step. If you select "1/4," you will not see the display shown in step 12; instead you will be prompted for the suction line length, as shown in step 13. (1/4 inch suction line is only available in vinyl, so you do not need to specify the line type.)
12	SUCTION LINE IS [, TEFLON]	This display appears when you have selected "3/8" in step 11. Select "VINYL" if you are using vinyl suction line, "TEFLON" if you are using Teflon suction line. Press the ENTER/PROGRAM key to accept the selection.

Step No.	Display	Procedure
13	SUCTION LINE LENGTH IS 15 FEET (3 - 99)	Enter the length of the suction line. The length should not include the tube coupling or the strainer. Press the ENTER/PROGRAM key to accept the entry and move to the step 14. If you change the suction line settings, the ". . . CALCULATING . . . PUMP TABLE VALUES" message will appear for a short time.
14	SELECT OPTION: (← →) LIQUID DETECTOR	Press the ENTER/PROGRAM key at this display to access the Liquid Detector input displays shown in steps 15 - 18.
15	[ENABLE, DISABLE] LIQUID DETECTOR	Select "ENABLE" to turn the Liquid Detector on, "DISABLE" to turn the Liquid Detector off. For the purposes of the following examples, select "ENABLE." Press the ENTER/PROGRAM key to accept the selection. The detector should normally be left enabled unless you suspect it is malfunctioning. If you disable the detector, you will be required to enter the suction head in the program sequence.
16	0 RINSE CYCLES (0 - 3)	This display appears when you have selected "ENABLE" in step 15. Enter the number of rinse cycles. For the purposes of this example, enter "0." Press the ENTER/PROGRAM key to accept the entry. Rinse cycles condition the suction line to reduce cross contamination.
17	ENTER HEAD MANUALLY [YES, NO]	This display appears when you have selected "ENABLE" in step 15. Select "YES" to add the suction head setting to the program sequence. For the purposes of the following examples, select "NO" to omit the setting. Press the ENTER/PROGRAM key to accept the selection.
18	RETRY UP TO 3 TIMES WHEN SAMPLING (0 - 3)	This display appears when you have selected "ENABLE" in step 15. Enter the number of retries. For the purposes of this example, set the number of retries to "0." Press the ENTER/PROGRAM key to accept the entry. This setting determines the number of times the sampler will try to detect the presence of liquid for each sample event.
19	SELECT OPTION: (← →) PROGRAMMING MODE	To verify the programming mode setting, press the ENTER/PROGRAM key.
20	[BASIC, EXTENDED] PROGRAMMING MODE	Select "BASIC." Press the ENTER/PROGRAM key to accept the selection.
21	↓ ↓	Scroll through the remaining options with the arrow keys. Use the techniques demonstrated above to change or verify the settings. If you want to re-initialize the configure and program settings to factory settings, follow the procedures given in steps 22-27.
22	SELECT OPTION: (← →) RUN DIAGNOSTICS	To access the displays used in this option, press the ENTER/PROGRAM key.
23	SOFTWARE REVISION #4.6	The sampler will display the software revision number for a short period of time.
24	RAM PASSED TEST TESTING 'ROM'	The software revision display is replaced by the RAM and ROM test messages. A successful test is indicated by the messages "RAM PASSED TEST" or "ROM PASSED TEST." If either the RAM or ROM fail the test, the sampler will display one of the following messages: "RAM FAILED TEST" or "ROM FAILED TEST" and beep every three seconds until you turn the sampler off. If either the RAM or ROM fail their test, the sampler should be serviced. Contact Isco Customer Service for instructions on returning the sampler.

Step No.	Display	Procedure
25	ABCDEFGHIJKLMNOPQRST UVWXYZ[¥]^_`abcdefgh	After successful RAM and ROM tests, the sampler will then test the LCD by first filling the display with solid rectangles and then printing the alphabet and other characters. Each character position in the display should contain a character.
26	PUMP COUNT TEST OFF/ON = 105	The next step tests the pump. During the test, the pump will run briefly and the display will indicate an "OFF/ON" number. The number should fall within the range of 50 to 200. If the count falls below 50 or exceeds 200, the pump should be serviced. A count near 100 is typical.
27	TEST DISTRIBUTOR? [YES, NO]	For the purposes of this example, select "NO" to skip the test. Press ENTER/PROGRAM to accept the selection.
28	RE-INITIALIZE? [YES, NO]	If you want to re-initialize the settings, select "YES." The entire RAM, with the exception of the current pump count total, bottle size settings, and suction line settings, will be re-initialized to factory settings. When you select "YES," the sampler will automatically turn itself off as part of the re-initialization process. Select "NO" leave the controller unchanged. Press the ENTER/PROGRAM key to accept the selection.

Example 2 Time-Paced Sequential Sampling

The steps in this example program the sampler to take samples every 30 minutes. Each bottle is to receive one 250 ml sample volume. The sampling routine is to begin according to the start time delay- one minute after the start sampling key is pressed.

Step No.	Display	Procedure
1	...STANDBY... 5:34:50 19-JUN-91	If the sampler is not already on, press the ON/OFF key to turn it on. The standby display shown here will appear. Press ENTER/PROGRAM to access the interactive state.
2	[PROGRAM, CONFIGURE] SAMPLER	Access the program sequence by selecting "PROGRAM." Because the choice "PROGRAM" will already be selected (blinking), press the ENTER/PROGRAM key to accept it and move to the next step.
3	[TIME, FLOW] PACED SAMPLING	To enter the interval between samples in time increments, select "TIME." If "TIME" is already blinking, press the ENTER/PROGRAM key to accept the selection. If "FLOW" is blinking, press the LEFT ARROW key once so that "TIME" blinks. Then, press the ENTER/PROGRAM key to accept "TIME."
4	SAMPLE EVERY HOURS, 1 MINUTES	This display requires two entries: one for the hours, one for the minutes. Enter "0" to set the hours at zero. Press ENTER/PROGRAM to accept the number "0" and move to the minutes entry shown in step 5.
5	SAMPLE EVERY 0 HOURS, MINUTES	Enter "30" to set the minutes entry to 30. Press ENTER/PROGRAM to accept the entry.
6	MULTIPLEX SAMPLES? [YES, NO]	For the purposes of this example, select "NO." Press the ENTER/PROGRAM key to accept the entry. If you select "YES" in response to this question, you would be able to select bottles-per-sample or samples-per-bottle multiplexing for your routine.
7	SAMPLE VOLUMES OF ml (10 - 1000)	Enter "250" to set the sample volume at 250 ml. Press the ENTER/PROGRAM key to accept the entry.

Step No.	Display	Procedure
8	ENTER START TIME? [YES, NO]	Because this sampling routine does not require a specific start time, use the arrow keys to select "NO." Press the ENTER/PROGRAM key to accept the entry. If you select "YES," you would be able to enter a specific start time and date for the routine.
9	PROGRAMMING SEQUENCE COMPLETE . . .	After this message is displayed briefly, the sampler will automatically return to the standby state.
10	. . . STANDBY . . . 5:42:23 19-JUN-91	After the sampler is properly installed, press the START SAMPLING key to run the program.
11	START SAMPLING BOTTLE 1 (1-24)	To start the sampling routine with the first bottle, accept the blinking "1" by pressing the ENTER/PROGRAM key. If you want to start the routine with another bottle, enter the starting bottle number here.
12	BOTTLE 1 AT 5:44 5:42:33	This display appears as the sampler counts down the time remaining to the start time. The first line reports the bottle which will receive the next sample volume. The second line reports the start time at the left and the current time on the right.
13	BOTTLE 1	When the start time arrives, the sampler will take the first sample. The sample event cycle begins with a pre-sample purge. During the purge, the display indicates the bottle number which will receive the sample volume.
	BOTTLE 1 PUMPING 250 ml	As soon as the pump runs forward to deliver the sample volume, the message on the second line appears. This message remains through the post-sample purge.
14	BOTTLE 2 AT 6:14 5:45:11	This display appears when the post-sample purge from the previous sample event is completed. It indicates the bottle number which is to receive the sample at the upcoming sample event. The second line displays the scheduled time for the next event on the left. The current time is displayed on the right.
15	↓ ↓	The cycle of displays, illustrated in steps 12 through 13, is repeated for each bottle until the sampling routine is done.
16	DONE . . . 24 SAMPLES 6:10:35 21-JUN-91	When the routine is completed, this message appears. It reports the status of the routine ("DONE"), the total number of sample events, and the current time and date.

Example 3 Flow-paced Sequential Sampling

This example programs the sampler to take flow-paced samples at intervals of 5 pulses. One 500 ml sample is to be placed in each bottle. The sampling program will default to the start time delay entered in the Start Time Delay configure option.

Step No.	Display	Procedure
1	...STANDBY... 10:34:50 19-JUN-91	Press ENTER/PROGRAM to access the interactive state.
2	[PROGRAM, CONFIGURE] SAMPLER	Access the program sequence by selecting "PROGRAM."
3	[TIME, FLOW] PACED SAMPLING	Select "FLOW."
4	SAMPLE EVERY 5 PULSES (1-9999)	Enter "5" as the flow pulse interval. The sampler will take a sample every fifth flow pulse received.
5	MULTIPLEX SAMPLES? [YES, NO]	
6	SAMPLE VOLUMES OF 500 ml (10 - 1000)	Enter "500" to set the sample volume at 500 ml.
7	ENTER START TIME? [YES, NO]	ENTER START TIME? [YES, NO] Select "NO."
8	PROGRAMMING SEQUENCE COMPLETE..	After this message is displayed briefly, the sampler will automatically return to the standby state.
9	...STANDBY... 10:37:23 19-JUN-91	After the sampler is properly installed, press the START SAMPLING key to run the program.
10	START SAMPLING AT BOTTLE 1 (1-24)	To start the sampling routine with the first bottle, press the ENTER/PROGRAM key. To start the routine with another bottle, enter the starting bottle number here.
11	START AT 10:38 19-JUN 10:37:26 19-JUN	The first line of this display indicates the start time. The second line reports the current time and date.
12	BOTTLE 1 AFTER 5 PULSES	This display indicates the bottle which will receive a sample at the next sample event. The second line indicates the number of pulses remaining to the sample.
13	BOTTLE 1 AFTER 4 PULSES	This display shows that one flow pulse has been received. The pulse countdown will continue until the sample event.
14	↓ ↓	
15	BOTTLE 1	The second line of the display will disappear as the sampler begins the presample purge.

Step No.	Display	Procedure
	BOTTLE 1 PUMPING 500 ml	This display appears when the pump begins to run in the forward direction to deliver the sample volume. It remains through the end of the post-sample purge.
16	BOTTLE 2 AFTER 5 PULSES	When the first sample volume has been delivered, the display will indicate the next sample bottle and the number of pulses remaining until the next sample event. This series of displays will repeat until the last sample is taken at bottle 24 and the sampling routine is done.
17	↓ ↓	
18	DONE . . . 24 SAMPLES 22:48:32 20-JUN-91	This display informs you that the sampling routine is completed. The number of sample events is displayed in the upper right corner. The second line indicates the current time and date.

Example 4 Time-paced Multiplexed (Samples-Per-Bottle) Sampling

This programming example demonstrates samples-per-bottle multiplexed sampling. Samples are to be taken every 15 minutes. Each bottle is to receive four sample volumes of 200 ml each, so that bottles are switched every hour. The sampling routine is to start at 6:00 am on the following day.

Step No.	Display	Procedure
1	. . . STANDBY . . . 10:34:50 19-JUN-91	Press ENTER/PROGRAM to access the interactive state.
2	[PROG PULSE, CONFIGURE] SAMPLER	Access the program sequence by selecting "PROGRAM."
3	[TIME, FLOW] PACED SAMPLING	Select "TIME."
4	SAMPLE EVERY 0 HOURS,1 MINUTES	Enter "0" to set the hours at zero. Press ENTER/PROGRAM to store the number "0" and move to the minutes entry.
5	SAMPLE EVERY 0 HOURS,15 MINUTES	Enter "15" to set the minutes entry to 15.
6	MULTIPLEX SAMPLES? [YES, NO]	Select "YES" to set up the samples-per-bottle multiplexing.
7	[BOTTLES PER SAMPLE, SAMPLES PER BOTTLE]	Select "SAMPLES PER BOTTLE."
8	4 SAMPLES PER BOTTLE (1 - 50)	Enter "4" to set the number of samples per bottle to 4.
9	SAMPLE VOLUMES OF 200 ml (10 - 250)	Enter the sample volume of "200" ml.
10	ENTER START TIME? [YES, NO]	Select "YES" so you can enter the specific start time.

Step No.	Display	Procedure
11	TAKE FIRST SAMPLE AT :00 20-JUN-91	When this display first appears, it will show you the sampler's "guess" at the start time. Type in the desired start time. For this example, the start time is 6:00 on June 20.
12	PROGRAMMING SEQUENCE COMPLETE . . .	After this message is displayed briefly, the sampler will automatically return to the standby state.
13	. . STANDBY . . . 10:37:23 19-JUN-91	To run the program, press the START SAMPLING key after the sampler is installed.
14	START SAMPLING AT BOTTLE 1 (1-24)	To start the sampling routine with the first bottle, accept the blinking "1" by pressing the ENTER/PROGRAM key. If you want to start the routine with another bottle, enter the starting bottle number here.
15	1 OF 4, BOTTLE 1 AT 6:00 5:55:33	This display is used with samples-per-bottle multiplexing. The first line shows the number of the next sample, the number of samples each bottle is to receive, and the current bottle number. Here, the next sample is the first of four samples for bottle 1. The second line shows the time of the next sample and displays the current time.
16	1 OF 4, BOTTLE 1	When the scheduled sample event time arrives, the second line will disappear while the sampler completes the pre-sample purge.
	1 OF 4, BOTTLE 1 PUMPING 200 ml	This message appears when the pump begins to deliver the sample. The message remains through the post-sample purge.
17	2 OF 4, BOTTLE 1 AT 6:15 6:00:26	When the sampling cycle is completed, the display will again indicate the upcoming sample.
18	2 OF 4, BOTTLE 1	The next displays illustrated here, in steps 18 through 20, show the displays as the sample volumes are deposited in bottle 1.
	2 OF 4, BOTTLE 1 PUMPING 200 ml	
19	3 OF 4, BOTTLE 1 AT 6:30 6:15:27	
20	3 OF 4, BOTTLE 1	
	3 OF 4, BOTTLE 1 PUMPING 200 ml	
21	↓ ↓	
22	1 OF 4, BOTTLE 2AT 7:00 6:45:25	When the final sample has been deposited in the first bottle, the display changes to indicate the new sample bottle. This display indicates that the next sample event will place the first of four sample volumes in bottle 2 at 7:00.

Step No.	Display	Procedure
23	1 OF 4, BOTTLE 2	This display appears as the pump begins the pre-sample purge for the first sample delivered to bottle 2.
	1 0F 4, BOTTLE 2 PUMPING 200 ml	
24	↓ ↓	The cycle of displays is repeated for each bottle until the sampling routine is done.
25	DONE . . . 96 SAMPLES 6:10:35 21-JUN-91	When the routine is completed, this message appears. It reports the status of the routine ("DONE"), the total number of sample events, and the current time and date.

Example 5 Flow-paced Multiplexed (Bottles-per-Sample) Sampling

This example demonstrates the steps needed to program the sampler for a flow-paced routine that is to place a sample in two bottles at each sample event. Sample volumes of 500 ml are to be placed in the bottle sets at intervals of 10 flow-pulses. The routine is to start at 5:00 am, the following morning.

Step No.	Display	Procedure
1	. . . STANDBY . . . 10:34:50 19-JUN-91	Press ENTER/PROGRAM to access the interactive state.
2	[, CONFIGURE] SAMPLER	Access the program sequence by selecting "PROGRAM."
3	[TIME,] PACED SAMPLING	Select "FLOW."
4	SAMPLE EVERY PULSES (1-9999)	Enter "10" as the flow pulse interval. The sampler will take a sample every tenth flow pulse received.
5	MULTIPLEX SAMPLES? [, NO]	Select "YES" to multiplex samples.
6	[, SAMPLES PER BOTTLE]	Select "BOTTLES PER SAMPLE."
7	BOTTLES PER SAMPLE EVENT (1-24)	Enter the number of bottles per sample event: "2."
8	SAMPLE VOLUMES OF ml (10 - 1000)	Enter "500" to set the sample volume at 500 ml.
9	ENTER START TIME? [, NO]	Select "YES."
10	START FLOW COUNT AT :00 20-JUN-91	Enter the start time for the sampling routine. Note that the sampler may receive flow pulses before the sampling routine begins. Any pulses received before the start time will be disregarded.
11	PROGRAMMING SEQUENCE COMPLETE . . .	After this message is displayed briefly, the sampler will automatically return to the standby state.

Step No.	Display	Procedure
12	...STANDBY... 10:37:23 19-JUN-91	Press the START SAMPLING key to run the program.
13	START SAMPLING AT BOTTLE 1 (1-23)	START SAMPLING?AT BOTTLE 1 (1-23) To start the sampling routine with the first bottle, accept the blinking "1" by pressing the ENTER/PROGRAM key. If you want to start the routine with another bottle, enter the starting bottle number here.
14	START AT 5:00 4/20 10:37:23 19-JUN	This display appears after you press the start SAMPLING KEY to start the routine. It reports the scheduled start time on the first line. The second line reports the current time and date.
15	BOTTLES 1-2 AFTER 10 PULSES	When the scheduled start time arrives, the sampler will begin to count flow pulses. This display indicates the bottles which will receive sample volumes at the sample event. (If the bottle set consisted of four bottles, the first line of the display would read, "BOTTLES 1 - 4.") The number of flow pulses remaining to the sample event is displayed on the second line.
16	BOTTLES 1-2 AFTER 9 PULSES	The second line of the display changes as each flow pulse is received.
17	↓ ↓	
18	BOTTLES 1-2 AFTER 1 PULSES	This display shows one pulse remaining until the sample event.
19	BOTTLE 1	When the tenth pulse is received, the first line will report the current bottle number.
20	BOTTLE 1 PUMPING 500 ml	When the pump begins to run forward to deliver the sample volume, the second line appears. After the pump completes the sample delivery, it reverses to purge the liquid from the pump tube past the liquid detector. The suction line is not completely purged; instead, the liquid is pumped just past the liquid detector. At the end of the pump tube purge, the distributor moves to the next bottle of the set. The display remains unchanged until the distributor relocates to the next bottle of the set.
21	BOTTLE 2 PUMPING 500 ml	When the distributor is relocated above the next bottle, the bottle number reported in the display changes to indicate the bottle number. The message, "PUMPING 500 ml," will remain on the display. When the distributor reaches the correct position over the second bottle, the pump delivers the sample volume. When the delivery is completed, the pump reverses to complete the post-sample purge.
22	BOTTLE 3-4 AFTER 10 PULSES	At the end of the post-sample purge, the display changes to indicate the bottle numbers of the next bottle set. The display will change as it receives each flow pulse.
23	↓ ↓	The cycle is repeated until the sampling routine is completed.
24	DONE... 12 SAMPLES 6:10:35 21-JUN-91	When the routine is complete, the display will indicate the status of the routine ("DONE"), the number of sample events, and the current time and date.

Example 6 Time-Paced Composite Sampling

This example demonstrates the programming procedures for a composite sampling routine. When using the 3700FR Sampler for composite sampling, the unit must be mechanically converted for single bottle sampling.

After converting the sampler, check the configure settings to verify the sampler is configured for composite sampling. This example begins with a demonstration of the steps needed to check the Bottles and Sizes configure option settings. The Bottles and Sizes configure settings should indicate that only one bottle is being used. Be sure to enter the correct bottle volume. The settings used in this example are for the 4-gallon (15000 ml) composite bottle. Please refer to *Bottles and Sizes,* on page 42. for a discussion of the Bottles and Sizes configure option.

This time-paced routine takes samples at 15-minute intervals for a 12-hour period. Sample volumes are to be 250 ml each. When entering the program settings, you must enter the number of samples required before entering the sample volumes. At four samples per hour, the 12 hour period would yield 48 samples. The total volume at the end of the routine would be 12000 ml (48 samples x 250 ml/sample), well within the capacity of the 4-gallon bottle.

Step No.	Display	Procedure
1	... STANDBY ... 10:34:50 19-JUN-91	If the sampler is not already on, press the ON/OFF key to turn it on. Press ENTER/PROGRAM to access the interactive state.
2	[PROGRAM, CONFIGURE] SAMPLER	Access the configure sequence by selecting "CONFIGURE."
3	SELECT OPTION: (← →) SET CLOCK	Press the LEFT ARROW or RIGHT ARROW key to scroll through the configure options until the Bottles and Sizes configure option appears.
4	SELECT OPTION: (← →) BOTTLES AND SIZES	To access the Bottles and Sizes settings, press the ENTER/PROGRAM key.
5	[PORTABLE, REFRIG.] SAMPLER	Select "REFRIG."
6	[, 2, 4, 8, 12, 24] BOTTLES	Select "1" for single bottle composite sampling.
7	BOTTLE VOLUME IS [illegible] ml	Enter the bottle size here, "15000." (**Table 4,** on page 43 lists the standard Isco bottle sizes.)
8	SELECT OPTION: (← →) SUCTION LINE	Press the ENTER/PROGRAM key at this display to access the Suction Line input displays.
9	SUCTION LINE ID IS [1/4, [illegible]] INCH	Select "1/4" if you are using 1/4 inch suction line, "3/8" if you are using 3/8 inch suction line.
10	SUCTION LINE IS [[illegible], TEFLON]	This display appears when you have selected "3/8" in step 9. Select "VINYL" if you are using vinyl suction line, "TEFLON" if you are using Teflon suction line.
11	SUCTION LINE LENGTH IS [illegible] FEET (3 - 99)	Enter the length of the suction line. The length should not include the tube coupling or the strainer.
12	SELECT OPTION: (← →) LIQUID DETECTOR	To verify the Liquid Detector configure options, press the ENTER/PROGRAM key.

Step No.	Display	Procedure
13	↓ ↓	Continue to scroll through the configure options with the RIGHT ARROW key. When you have checked the settings for the desired options, press the EXIT PROGRAM key to return to standby.
14	... STANDBY ... 10:38:50 19-JUN-91	Press the ENTER/PROGRAM key to reenter the interactive state.
15	[PROGRAM, CONFIGURE] SAMPLER	Access the program sequence by selecting "PROGRAM."
16	[TIME, FLOW] PACED SAMPLING	Select "TIME."
17	SAMPLE EVERY HOURS, 1 MINUTES	Enter "0" to set the hours at zero. Press ENTER/PROGRAM to store the number "0" and move to the minutes entry.
18	SAMPLE EVERY 0 HOURS, 15 MINUTES	Enter "15" to set the minutes entry to 15.
19	COMPOSITE SAMPLES (0-200)	Enter the number of samples to be collected: "48."
20	SAMPLE VOLUMES OF ml H (10 - 310)	Enter the sample volume: "250." Note that the upper limit of the range of acceptable volumes has been adjusted. When 48 samples are to be collected, the maximum sample volume is 310 ml. If you need to use a larger sample volume, you would need to adjust the sample number downward.
21	ENTER START TIME? [YES, NO]	Select "YES" to enter the start time for the routine.
22	TAKE FIRST SAMPLE AT :00 20-JUN	Enter the start time and date: "6:00" on "4-20."
23	PROGRAMMING SEQUENCE COMPLETE ...	After this message is displayed briefly, the sampler will automatically return to the standby state.
24	... STANDBY ... 10:40:23 19-JUN-91	After the sampler is properly installed, press the START SAMPLING key to run the program.
25	SAMPLE 1 OF 48 AT 6:00 5:50:43	The first line of this display indicates the number of the upcoming sample event and the total number of programmed samples. The second line indicates the scheduled time of the upcoming event followed by the current time.
26	SAMPLE 1 OF 48	When the time to the next sample event has elapsed and the sampler has initiated the sample event, the sampling cycle begins.
	SAMPLE 1 OF 48 PUMPING 250 ml	When the pump reverses for the pre-sample purge, the second line disappears. At the end of the pre-sample purge, the pump runs forward to deliver the sample, and the second line appears on the display. This display remains through the end of the post-sample purge.

Step No.	Display	Procedure
27	SAMPLE 2 OF 48 AT 6:15 6:00:33	At the end of the sample event, the display changes to indicate the number and time of the next event. The current time is in the lower right corner.
28	SAMPLE 2 OF 48	The cycle is repeated for the remainder of the sampling routine.
	SAMPLE 2 OF 48 PUMPING 250 ml	
29	↓ ↓	
30	DONE . . . 48 SAMPLES 6:10:35 21-JUN-91	This display appears when the routine is completed. It reports the status of the routine ("DONE"), the total number of sample events, and the current time and date.

Example 7 Calibration Procedure

This example demonstrates the method used to calibrate the sampler for a 200 ml sample volume. The Calibrate Sampler configure option must be enabled in the configure sequence before the calibration displays shown below appear.

Even without calibrating, the 3700FR Sampler will deliver accurate sample volumes. If your sample volumes vary significantly with the entered values, check the suction line first. Be sure the line slopes continuously downhill and is draining completely after each pumping cycle. Then, please check the suction line entries in the configure sequence to see that they are accurate. The calibration procedure is intended for "fine tuning" only. After you enter the sample volume actually delivered, as shown in step 8, the next sample volume delivered will be adjusted to correct for the difference between the expected sample volume and the actual volume entered. All subsequent volumes delivered will be adjusted. The adjustment can be cleared by changing a suction line entry in the Suction Line configure option or by re-initializing the sampler.

We suggest using a spare sample bottle as the collection container. Because the sample volume can be calibrated to ± 10 ml, a graduated cylinder should be used to facilitate measurement. A graduated cylinder and spare bottles are available as accessories from the factory. Refer to the Accessories List at the back of this manual for details.

The calibration pump cycle will include rinse cycles and retries, if the sampler is configured to perform them (*Liquid Detector,* on page 44). This insures that the calibration procedure includes the pump cycle used while running the sampling program.

Step No.	Display	Procedure
1	. . . STANDBY . . . 9:34:50 19-JUN-91	Press ENTER/PROGRAM to access the interactive state.
2	[, CONFIGURE] SAMPLER	Access the program sequence by selecting "PROGRAM."
3	[, FLOW] PACED SAMPLING	Step through the program until the "CALIBRATE SAMPLER?" (step 5) input display appears.
4	↓ ↓	Other program sequence displays.

Step No.	Display	Procedure
5	CALIBRATE SAMPLER? [YES, NO]	Select "YES."
6	PRESS MANUAL SAMPLE KEY WHEN READY . . .	Before pressing the MANUAL SAMPLE key, make sure a collection container is underneath the distributor.
7	. . . MANUAL SAMPLE . . . PUMPING 200 ml	The sampler will deliver the programmed sample volume.
8	[illegible] ml VOLUME DELIVERED	Measure the actual volume delivered and enter that value here.
9	CALIBRATE SAMPLER? [YES, NO]	Repeat the procedure if desired, then select "NO." Under normal conditions, you should not need to repeat the procedure more than once.
10	↓ ↓	Other program sequence displays.
11	. . . STANDBY . . . 9:39:50 19-JUN-91	The sampler will return to standby. Press the START SAMPLING key to run the program.

CONFIGURE SEQUENCE

The configure sequence provides a number of setup options. Some options enable sampling features, some provide reference data, and others affect run state operations.

Example 1, on page 29 shows the procedure used to access the configure sequence. (When you see a "SELECT OPTION: (← →)" display, you are in the configure sequence.) Each option uses at least two displays. The first display lists the option name. The following displays are input displays. To access an input display, press the ENTER/PROGRAM key while the desired option name is displayed. Once you've accessed the input display, use the keypad to enter numbers and make choices as described in *Keypad Description,* on page 23 through *Displays,* on page 25.

Note: pressing the EXIT PROGRAM key in the configure option list will return the sampler to standby. Pressing the EXIT PROGRAM key in a configure option input display will return you to the list of configure options without changing the setting.

By pressing the LEFT ARROW or RIGHT ARROW key at the "SELECT OPTION:" display in the configure sequence, you can scroll through the list of configure options without viewing each input display. If you are interested in only one or two options, you can locate the option of interest quickly.

Each option is discussed below in the order in which it appears when configuring the sampler. Individual input displays and their settings, are discussed separately within the discussion of each option. For these, the name of the setting is placed in the left margin so you can identify each topic. Illustrations of displays are not included in each discussion; however, each discussion includes the display number, should you need to refer to display listing in *Appendix B Display Index,* on page 138.

SET CLOCK

The Set Clock option is used to synchronize the sampler's clock with real time. Times must be entered in military time: 9:30 am would be entered as 9:30, 9:30 pm would be entered as 21:30. When the year entry is accepted, the seconds will be reset to zero. (Display #210).

BOTTLES AND SIZES

The Bottles and Sizes option is used to enter the number of bottles and the bottle volume. The option uses four input displays:

- The first display specifies a portable or refrigerated sampler.
- The second display sets the number of bottles (1, 4, 12, or 24) for portable configurations. The second display appears only when you specify a portable sampler in the first display.

- The third display sets the number of bottles (1, 2, 4, 8, 12, 24) for refrigerated configurations. The third display appears only when you specify a refrigerated sampler in the first display.
- The fourth display sets the bottle volume.

Portable or Refrigerated Sampler

Because the 3700 Series portable and refrigerated samplers use the same control box, you must specify the type of unit. The 3700FR Sampler will be shipped with this setting as "REFRIGERATED." This setting is not changed when you reinitialize the settings. You should not specify "PORTABLE" unless you move the control box to portable sampler. (Display #220).

CAUTION

The sampler uses the bottle configuration setting to position the distributor. If you enter a bottle configuration that does not correspond to the actual configuration used in the sampler, the sampler may position the distributor over locations without a bottle and fill the refrigerator instead of a sample bottle.

Portable

If you specify "PORTABLE" in the previous display, you will be able to specify a 1-, 4-, 12, or 24-bottle configuration. The sampler comes configured for the number of bottles ordered with the sampler. Each bottle configuration requires a different base section. The 1-bottle configuration requires the composite base section; the 4-bottle configuration requires the 4 bottle base section, and so on. Change the configuration setting only when you have moved the controller to a portable sampler. If you change the bottle configuration without changing the base section, the sampler will not position the distributor arm over the bottles and will miss the bottle mouth, filling the base section instead of the bottles. (Display #222).

Refrigerated

If you specify "REFRIGERATED," you will be able to specify a 1-, 2-, 4-, 8-, 12-, or 24-bottle configuration. The 2- and 8-bottle configurations are used only with Isco's 3700 Series Refrigerated Samplers. (Display #221).

Continuous Sampling

You can program the 3700FR refrigerated sampler for continuous sampling. A 3700FR programmed for continuous sampling will deposits samples into successive sets of bottles, until it reaches the last set of bottles. It then returns to the first set of bottles and continues sampling indefinitely into successive sets. Continuous sampling is available for all multiple-bottle configurations.

Before programming a sampler for continuous sampling, configure the sampler as follows. Select "refrigerated" and "2," "4," "8," "12," or "24" bottles in the Bottles and Sizes configure option. Next, configure the sampler for extended programming in the Programming Mode configure option. Under these settings, the display illustrated below will appear in the sample distribution section.

SAMPLE CONTINUOUSLY? [YES, NO]	Display #48

Note: The sampler will deposit samples indefinitely, even though the bottles have been filled to capacity. To avoid overfilling the bottles, replace them at regular time intervals or as soon as they are filled.

Cumulative Error

The sample accuracy is the greater of 10% of the sample volume or 20 ml and is repeatable to ± 10 ml. If you wish to fill a 1000-ml bottle with five 200-ml samples, adjust the actual sample volume according to the sample accuracy. Since samples of 200 ml can vary by 10% or ± 20 ml, the cumulative error for five samples would be ± 100 ml. If the sampler consistently places an actual sample volume of 220 ml for each of five samples, the total volume held by the bottle would be 1100 ml. Again, to avoid possible overfilling, enter a bottle volume that is less than the actual bottle capacity.

Table 4 Bottle volume settings for sequential and composite bottle configurations

Bottle Configuration	Bottle Size	Bottle Volume Setting
24 (polypropylene)	1000 ml	1000
24 (glass)	350 ml	350
12 (polyethylene)	2500 ml	2500
8 (polyethylene)	2000 ml	2000
8 (glass)	1800 ml	1800
4 (glass and polyethylene)	1 gal	3800
2 (glass and polyethylene)	2.5 gal	9400
1 (glass and polyethylene)	2.5 gal	2.5 gal
1 (polyethylene)	4 gal	15000

SUCTION LINE

The Suction Line configure option is used to configure the sampler for the type (vinyl or Teflon), diameter, and length of the suction line used. Because the volumetric delivery varies with line diameter, type, and length; it is important that these settings be entered accurately. An incorrect setting will impair the accuracy of the sample volume. If you change the current suction line settings, the ". . . CALCULATING . . . PUMP TABLE VALUES" message will appear for a short time. Because the volumetric delivery of the sample varies with the diameter, type, and length of the suction line, the sampler must revise the internal pump tables. The tables are used as reference for the electronic pump count for sample delivery.

There are three types of suction lines available for use with the 3700FR sampler: 3/8 inch vinyl, 3/8 inch vinyl, and 3/8 inch Teflon. If you specify 1/4 inch line, the sampler will prompt you for the line length immediately. If you specify 3/8 inch line, the sampler will prompt you to specify vinyl or Teflon before prompting for the line length. (Display #'s 230 and 231).

The sampler will accept suction line lengths of 3 to 99 feet. When measuring the line, do not include the tube coupling or the strainer in the measurement. The line should be cut to even foot lengths. It is important to enter these settings accurately. These settings affect the accuracy of the sample volume and are used to determine the number of post-sample purge counts. It is important to have sufficient counts to completely clear the line. (Refer to *Purge Counts,* on page 52.) (Display #232).

LIQUID DETECTOR

The Liquid Detector configure option is used to turn the liquid detector on or off, set the number of rinse cycles, add a suction head setting to the program sequence, and set the number of sampling retries should the suction line become clogged. The option uses four input displays. Each display is discussed below.

Enable/Disable Detector

The recommended setting for the Enable/Disable Detector option is "ENABLE." The 3700FR Sampler determines the delivered sample volume suction head by counting revolutions of the pump rotor.

The volume of liquid delivered by one revolution of the pump rotor is a function of the suction head of the pump; as the suction head increases, the volume delivered by one revolution of the pump rotor decreases and vice versa. By enabling the detector, the sampler can accurately determine the operating suction head. It does not have to rely on a programmed suction head value, but can instead begin its volume delivery count when liquid is detected. This minimizes inaccuracies which can occur in changing head conditions, or when measurement of the suction head is difficult to determine accurately.

The disable option is provided should the detector or its associated circuitry become suspect. If the detector is disabled, the manual suction head setting (Display #70) is automatically added to the sample volume program section in the program sequence. If the detector is disabled, the sampler will use a calculated number of pump counts based on the suction head entry to deliver the correct sample volume. The programmed suction head entry is then used to determine the operating suction head. The sampler will operate at diminished accuracy with the detector disabled. (Display #240).

Rinse Cycles

The Rinse Cycle setting is available only when the detector is enabled. It is used to set the number of suction line rinses, from 0 to 3. Rinses are used to condition the suction line to reduce cross contamination. During a rinse cycle, the pump draws liquid up through the line until it is detected by the liquid detector. At that point, the pump reverses to purge the line. This cycle is repeated according to the number of rinse cycles entered. (See *Sample Events and the Sampling Cycle,* on page 15 for a discussion of the sample event cycle.) (Display #241).

Rinse cycles contribute to the wear on pump tubing; therefore, if you use rinse cycles, it may be necessary to replace the tubing more frequently. The Tubing Life configure option, *Tubing Life,* on page 52, allows you to monitor pump tubing wear.

Enter Head Manually

Entering the head manually is available as an option when the detector is enabled and allows you to add the suction head entry (Display #70) to the program sequence. When the detector is disabled, the Suction Head entry is automatically added to the program sequence. By disabling the suction head setting, you allow the liquid detector to determine the operating suction head each time a sample is taken. Using the Suction Head entry in conjunction with the liquid detector, when the head is stable and known accurately, further increases accuracy of the delivered volume. When the head is variable or unknown, you should select "NO." An incorrect head setting diminishes the delivered volume accuracy. (Display #242).

Sampling Retries

The Sampling Retries option is used to set the number of times, from 0 to 3, the sampler will try to detect liquid in the line before skipping the sample. The option can be used when sampling liquid with a high concentration of solids which tend to clog the suction line or the strainer. The sampler will also retry the rinse cycle when you are using the Sampling Retry option. (Display #243).

PROGRAMMING MODE

The Programming Mode option allows you to specify either the basic or extended programming mode. The basic programming mode is used for conventional routines; the extended programming mode can be used for either conventional or more complex routines. Storm programming is available through the extended programming mode.

Table 5 summarizes the sampling features according to programming mode in the program sequence. **Table 3,** on page 21, placed in *Interactive State,* on page 20, summarizes the features available in the configure sequence. Extended features are normally used in exceptional applications and are not available in the basic mode to simplify the programming process for conventional routines.

Table 5 Sampling capabilities available through the Program Sequence

Pacing:	Mode	Feature
Time-pacing: Uniform Time Intervals	Basic & Extended	Samples taken at regular time intervals from 1 minute to 99 hours, 59 minutes.
Time-pacing: Nonuniform Intervals in Minutes	Extended	Samples taken at irregular time intervals by specifying the amount of time in minutes between each sample. Intervals can be entered from 1 to 999 minutes.
Flow-pacing	Basic & Extended	Samples taken at regular flow intervals. The sampler will totalize flow intervals of 1 to 9999 pulses.

Distribution:	Mode	Feature
Sequential	Basic & Extended	One sample volume placed in each bottle.
Samples per Bottle Multiplexing	Basic & Extended	More than one sample volume placed in each bottle. Bottles can be switched after a specified number of samples have been deposited or after a specified period of time.
Bottles per Sample Multiplexing	Basic & Extended	Sample volumes placed in more than one bottle at each sample event.
Multiple Bottle Compositing	Extended	More than one sample volume placed in a set of bottles. Bottle sets can be switched after a specified number of samples have been deposited or after a specified period of time

Volumes and Accuracy:	Mode	Feature
Sample Volume	Basic & Extended	Volumes from 10 to 9990 ml can be entered.
Suction Head	Basic & Extended	Suction heads from 1 to 20 feet can be entered.
Calibration	Basic & Extended	Sample volumes can be calibrated, if desired.

Key Times:	Mode	Feature
Start Times	Basic & Extended	Specific start times can be entered for both time-paced and flow-paced routines. If no start time is entered, the Start Time Delay will be used.
First Switch Time	Extended	Bottles can be switched after specified time intervals. After the routine is started, the first switch time allows the first bottle or bottle set to receive samples for a partial interval. After the first switch, the remaining sets will receive samples for full time intervals. This allows you to place the sampler "on schedule."
Stop/Resume Times	Extended	Intermittent sampling can be performed by defining sampling stop and resume times. Up to 12 stop times and 12 resume times can be entered.

STORM Programming (Available in the Extended Mode Only.)

STORM Pacing:	Mode	Feature
Time-pacing	Extended	Samples taken at regular time intervals from 1 minute to 99 hours, 59 minutes.
Flow-pacing	Extended	Samples taken at regular flow intervals. The sampler will totalize flow intervals of 1 to 9999 pulses.

STORM Distribution:	Mode	Feature
Sequential	Extended	One sample volume placed in each bottle.
Samples per Bottle Multiplexing	Extended	More than one sample volume placed in each bottle. Bottles can be switched after a specified number of samples have been deposited.
Bottles per Sample Multiplexing	Extended	Sample volumes placed in more than one bottle at each sample event.
Multiple Bottle Compositing	Extended	More than one sample volume placed in a set of bottles. Bottle sets can be switched after a specified number of samples have been deposited.

STORM Volumes and Accuracy:	Mode	Feature
Sample Volume	Extended	Volumes from 10 to 990 ml can be entered for the time-paced and flow-paced segments separately.
Suction Head	Extended	Suction heads from 1 to 20 feet can be entered.
Calibration	Extended	Sample volumes can be calibrated, if desired. Sets calibration using the timed sample volume, only.

STORM Key Times:	Mode	Feature
Delay to First Timed Sample	Extended	A delay of up to 99 minutes can be entered to delay the first timed sample event after the programmed start time, and, in applications where a flow meter is programmed to enable the sampler, after the sampler is enabled.
Start Times	Extended	A specific start time can be entered for the routine. Bottle groups can be filled concurrently. If no start time is entered, the Start Time Delay will be used.
Maximum Flow Interval	Extended	Maximum period of time can be entered between flow-paced sample events. If this period of time is exceeded, the sampler will terminate the routine.

LOAD STORED PROGRAM

The Load Stored Program option allows you to load one of up to three sampling programs which have been previously saved with the Save Current Program configure option, discussed in *Save Current Program,* on page 48. The loaded program will replace the current program. After loading a program, the sampler will adjust the loaded program's time settings to current times and dates. Check the settings before starting the program to be sure they are appropriate for your application.

When the sampler loads a program, it compares the current Bottle Configuration setting (Display #220) to the Bottle Configuration setting required by the loaded program. If the settings do not match, an error message will be displayed: "LOAD ERROR - BOTTLE COUNT MISMATCH." The load process will be aborted. (Display #250).

The sampler is shipped from the factory with four programs: the current program and three stored programs, numbered from 1 to 3. All four programs contain the factory default program settings. Unless you have previously saved a program under one of the program numbers, loading a program will replace the current program with the factory default settings. When you reinitialize the sampler, all four programs return to the default program settings.

Example 8 Loading a Stored Program.

Step No.	Display	Procedure
1	...STANDBY... 10:34:50 19-JUN-91	Press ENTER/PROGRAM to access the interactive state.
2	[PROGRAM, CONFIGURE] SAMPLER	Access the configure sequence by selecting "CONFIGURE."
3	SELECT OPTION: (← →) SET CLOCK	Press the LEFT ARROW or RIGHT ARROW key to scroll through the configure options. The first option displayed is the Set Clock configure option.
4	↓ ↓	
5	SELECT OPTION: (← →) PROGRAMMING MODE	You can load a stored programmed only when the sampler is configured for the extended programming mode. To verify the programming mode setting, press the ENTER/PROGRAM key.
6	[BASIC, EXTENDED] PROGRAMMING MODE	Select "EXTENDED." Press the ENTER/PROGRAM key to accept the selection.
7	SELECT OPTION: (← →) LOAD STORED PROGRAM	Press ENTER to access the Load Stored Program configure option.
8	LOAD PROGRAM [#1, #2, #3, NONE]	Select the number of the program you want to load. Select "NONE" when you do not want to load a program.
9	SELECT OPTION: (← →) SAVE CURRENT PROGRAM	When the sampler has loaded the program, it will display the next configure option. When you are done configuring the sampler, press EXIT PROGRAM to return to Standby.
10	...STANDBY... 10:37:23 19-JUN-91	After the sampler is properly installed, press the START SAMPLING key to run the program.

SAVE CURRENT PROGRAM

The Save Current Program option allows you to assign up to three sampling routines a number and store them. This option eliminates the need to reprogram the sampler for recurrent routines. Only the program settings are saved; if different routines require different cofigurations, the sampler must be reconfigured for each routine. For example, if the sampler is used at two sites, each requiring a specific sampling routine and different suction line lengths, the sampling routines can be stored for each site, but the suction line length settings must be reentered each time the line changes. (Display #260).

The sampler is shipped from the factory with four programs: the current program and three stored programs, numbered from 1 to 3. All four programs contain the factory default program settings. Saving a program will replace the default program with the current settings. Reinitializing the sampler will restore the default program settings. The default program settings are listed in **Table 7,** on page 55.

Note: saving a program will overwrite a program saved earlier under the same number. Settings for the current program can be viewed with the Display Status procedure. Refer to *Display Status,* on page 91.

Example 9 Saving a Current Program

Step No.	Display	Procedure
1	...STANDBY... 10:34:50 19-JUN-91	Press ENTER/PROGRAM to access the interactive state.
2	[PROGRAM, ▯▯▯▯▯▯▯▯] SAMPLER	Access the configure sequence by selecting "CONFIGURE."
3	SELECT OPTION: (← →) SET CLOCK	Press the LEFT ARROW or RIGHT ARROW key to scroll through the configure options. The first option displayed is the Set Clock configure option.
4	↓ ↓	
5	SELECT OPTION: (← →) PROGRAMMING MODE	You can save the current program only when the sampler is configured for the extended programming mode. To verify the programming mode setting, press the ENTER/PROGRAM key.
6	[BASIC, ▯▯▯▯▯▯▯▯] PROGRAMMING MODE	Select "EXTENDED." Press the ENTER/PROGRAM key to accept the selection.
7	SELECT OPTION: (" Æ) LOAD STORED PROGRAM	Press the RIGHT ARROW key to skip the Load Stored Program configure option.
8	SELECT OPTION: (← →) SAVE CURRENT PROGRAM	Press the ENTER/PROGRAM key to access the Save Current Program configure option.
9	SAVE PROGRAM AS [#1, #2, #3, NONE]	Select the number you want to use as the program "name." Select "NONE" when you do not want to save a program. When the sampler has saved the program, it will display the next configure option. When you are done configuring , press EXIT to return to Standby.
10	...STANDBY... 10:37:23 19-JUN-91	When the sampler is properly installed, press the START SAMPLING key to run the program.

FLOW MODE SAMPLING

The Flow Mode Sampling option is used to direct the sampler to take a sample at key times in a flow-paced sampling program. The Flow Mode Sampling option has two settings. The first setting directs the sampler to take a sample at the start time. The second directs the sampler to take a sample at the switch times (when the bottle set changes are based on time). Both settings of the option are disregarded in STORM sampling routines. (Display #40).

Sample at Start Time

If you select "YES," the first sample will be taken at the start time. If you select "NO," the first sample is delayed until the number of flow pulses, set in the program sequence, have been counted. (Display #270).

Sample at Time Switch

If you select "YES," the sampler will switch to a new bottle or set, take a sample, and reset the flow pulse count. The next sample will occur after a full pulse countdown. If you select "NO," the sampler will take no samples at the switch time and will not reset the pulse countdown. The switch will occur in the middle of a pulse countdown and the first sample will be deposited in the new bottle or set when the countdown is completed. (Display #271).

NONUNIFORM TIME

The Nonuniform Time option specifies the method in which nonuniform intervals are to be entered in the program sequence (Display #'s 26 or 27). If you select "clock-time," you will be able to enter a specific time and date for each sample event. If you select "MINUTES," you will be able to enter nonuniform intervals in minutes. Nonuniform times are not available in a STORM sampling routine. (Display #280).

CALIBRATE SAMPLER

The Calibrate Sampler option is used to add the calibration sequence to the program sequence. If you select "ENABLE," the calibration sequence will be added to the program sequence and you will be able to precisely calibrate the sample volumes. (Display #290)

SAMPLING STOP/RESUME

The Sampling Stop/Resume configure option allows you to add stop and resume settings (Display #'s 100, 101, and 102) to the Key Time section of the program sequence. You can enter up to 24 times: 12 stop times and 12 resume times. For example, the Stop/Resume option allows you to define a sampling routine which will take samples at intervals of 15 minutes between 6:00 am to 8:00 am and between 4:00 pm to 6:00 pm. Sampling Stops and Resumes are not available in a STORM routine.

When you are using a time-switched sampling routine which includes stops and resumes, the sampler will reset the time-switch interval at each resume time. For example, if a routine with time-switches every hour is programmed for stop and resume times, the first time-switch would occur one hour after the resume time; switches would repeat every hour until a stop time occurred or the routine was completed. See **Example 10,** on page 74.

There are two other settings which direct the sampler to take samples at stop or resume times.

Enable/Disable

Select "ENABLE" to add the stops and resume settings to the program sequence. (Display #300).

Sample at Stop

The Sample at Stop setting directs the sampler to take a sample at stop times. (Display #301).

Sample at Resume

The Sample at Resume setting directs the sampler to take a sample at resume times. (Display #302).

START TIME DELAY

The Start Time Delay option is used to set the amount of time in minutes, between the time you press the start sampling key and the time the sampling routine is initiated. The sampler's response varies according to specific entries: "0," "1," and entries greater than 1.

---- MINUTE DELAY TO START (0 - 9999)	Display #310

An entry of "0" eliminates the delay to start time; the start time occurs the moment you press START SAMPLING. For example, if you press START SAMPLING at 10:32:15, the sampler will initiate a time-paced sample event at 10:32:15.

However, the sampler will start clocking time intervals at the beginning of the minute (HH:MM:00) of the first sample event. If a sampling routine requires 10 minute intervals and you pressed start sampling at 10:32:15, the sampler would begin the time interval at 10:32:00. It would initiate the second sample event at 10:42:00. The sampler would begin the flow interval at 10:32:15 for flow-paced routines.

If you enter a start time delay of "1," the sampler will begin the routine at the beginning of the next minute. Thus, if you pressed start sampling at 10:32:15, the sampler would initiate the sample event at 10:33:00. The sampler would begin time and flow intervals at 10:33:00. If you enter a start time delay of "2," the sampler would begin time or flow intervals at 10:34:00. (Display #310).

Note: If you enter a start time, the sampler will disregard the start time delay. The sampler will use the start time delay setting when you do not enter the start time in the program sequence. Care must be taken when using a start time delay of greater than zero when the sampler is being inhibited by another sampler or by a Liquid Level Actuator. Refer to *Enable Pin,* on page 50.

Enable Pin

The Enable Pin option allows you to program the sampler's response to a device controlling pin F of the sampler's flow meter connector: for example, the Model 1640 Liquid Level Actuator. Samplers configured for refrigerated sampling have four Enable Pin setup options: Sample Upon Disable, Sample Upon Enable, Reset Sample Interval, and Inhibit Countdown. The sampler disregards the Enable Pin configure option setting when running a STORM routine. Each of these options is discussed below.

Sample Upon Disable

When you are using a flow meter, a Liquid Level Actuator, or like device, "SAMPLE UPON DISABLE?" allows you to direct the sampler to take a sample as soon as the sampler is disabled through pin F. A response of "YES" will cause the sampler to take a sample when the pin is disabled; a response of "NO" will prevent the sampler from taking a sample at that time. (Display #321).

Sample Upon Enable

When you are using a Liquid Level Actuator or like device, "SAMPLE UPON ENABLE?" allows you to direct the sampler to take a sample as soon as the sampler is enabled through pin F. A response of "YES" will cause the sampler to take a sample when the pin is enabled; a response of "NO" will prevent the sampler from taking a sample at that time. (Display #322).

Reset Sample Interval

"Reset Sample Interval" is used to control the time or flow pulse countdown. If you select "YES," a full sample interval will begin when pin F is enabled. If you select "NO," the interval will not be reset when the sampler is enabled; the interval is then governed by settings entered in the "INHIBIT COUNTDOWN?" option. If you are sampling on a time-paced basis and wish to synchronize all sampling with real time, do not reset the sample interval. (Display #323).

Inhibit Countdown

"INHIBIT COUNTDOWN?" is only applicable when you respond "NO" to "RESET SAMPLE INTERVAL?" The Inhibit Countdown option is used to control the countdown while the sampler is inhibited. Select "YES" to freeze the countdown to the next sample. The count will resume when the sampler is enabled. Select "NO" to allow the countdown to continue while the sampler is disabled. (Display #324).

The sampler determines an enable or disable condition by monitoring the voltage on pin F. High voltage is interpreted as an enable signal. Low voltage or ground is interpreted as a disable signal.

A sampler which has been inhibited while running a routine will move to the next bottle set when enabled if at least one sample volume has been deposited in the current bottle set. This is true for both time-switched and count-switched routines, and for bottles sets composed of one or more bottles.

A sampler which has been inhibited while running a time-switched routine will advance to the next bottle or bottle set, regardless of the number of time-switches that elapse while the sampler is inhibited. In other words, if the bottle sets were to be switched every two hours and the sampler has been inhibited for six hours, the recommenced routine will begin with the next bottle set. The routine may not continue with the bottle set that would have been used had the sampler not been inhibited.

Event Mark

The Event Mark option configures the sampler to send an event mark to an interfaced flow meter or other equipment. The sampler will supply a variable duration pulse of up to 700 mA at 12 V on pin E of the flow meter connector. Four types of signals can be sent: a pulse at the beginning of the pre-sample purge, a pulse at the beginning of forward pumping only, continuous during the entire pump cycle, and continuous during forward pumping only.

The event mark includes a signal sent on pin D which is interpreted and recorded by an Isco flow meter as the bottle number(s) for the sample event. The bottle number signal consists of a number of 100 millisecond, 12 V pulses which equal the bottle number; i.e., four pulses represent bottle 4, twenty pulses for bottle 20.

The type of signal selected from the Event Mark configure option affects both the event mark signal on pin E and the bottle number signal on pin D. **Figure 21** diagrams the signals during a sample event cycle according to the selection made in the option. The figure shows three sample volumes being delivered (to bottles 1, 2, and 3) at the sample event. In **Figure 21(A)**, a pulse signal is sent at the beginning of the pre-sample purge and only the first bottle number of the bottle set is sent to the flow meter. In **Figure 21(B)**, a pulse signal is sent during the sample volume delivery portion of the sample event. Since three sample volumes are delivered, three pulses are sent to the flow meter and three bottle number signals are sent. In **Figure 21(C)**, a continuous signal is sent during the entire pump cycle; the bottle numbers are sent as shown. In **Figure 21(D)**, three continuous pulses are sent for the duration of each sample volume delivery and three bottle number signals are sent.

Continuous/Pulse Signal

The Continuous/Pulse setting is used to select either continuous or pulse signals. Pulse signals are three seconds in duration; continuous signals are three seconds or longer and depend on the setting and the pump cycle. (Display #330).

Pump/Cycle Forward Pumping

The Pump Cycle/Fwd Pumping settings will appear when you have selected "CONTINUOUS." Select "PUMP CYCLE" when you want a continuous signal transmitted during the entire pump cycle, from the beginning of the pre-sample purge to the end of the post-sample purge. Select "FWD PUMPING" when you want a continuous signal transmitted while the pump is delivering a sample volume. A signal is transmitted for each bottle when the sampler is programmed for more than one bottle per sample. (Display #331).

Figure 21 Event Mark and Bottle Number Signal Output

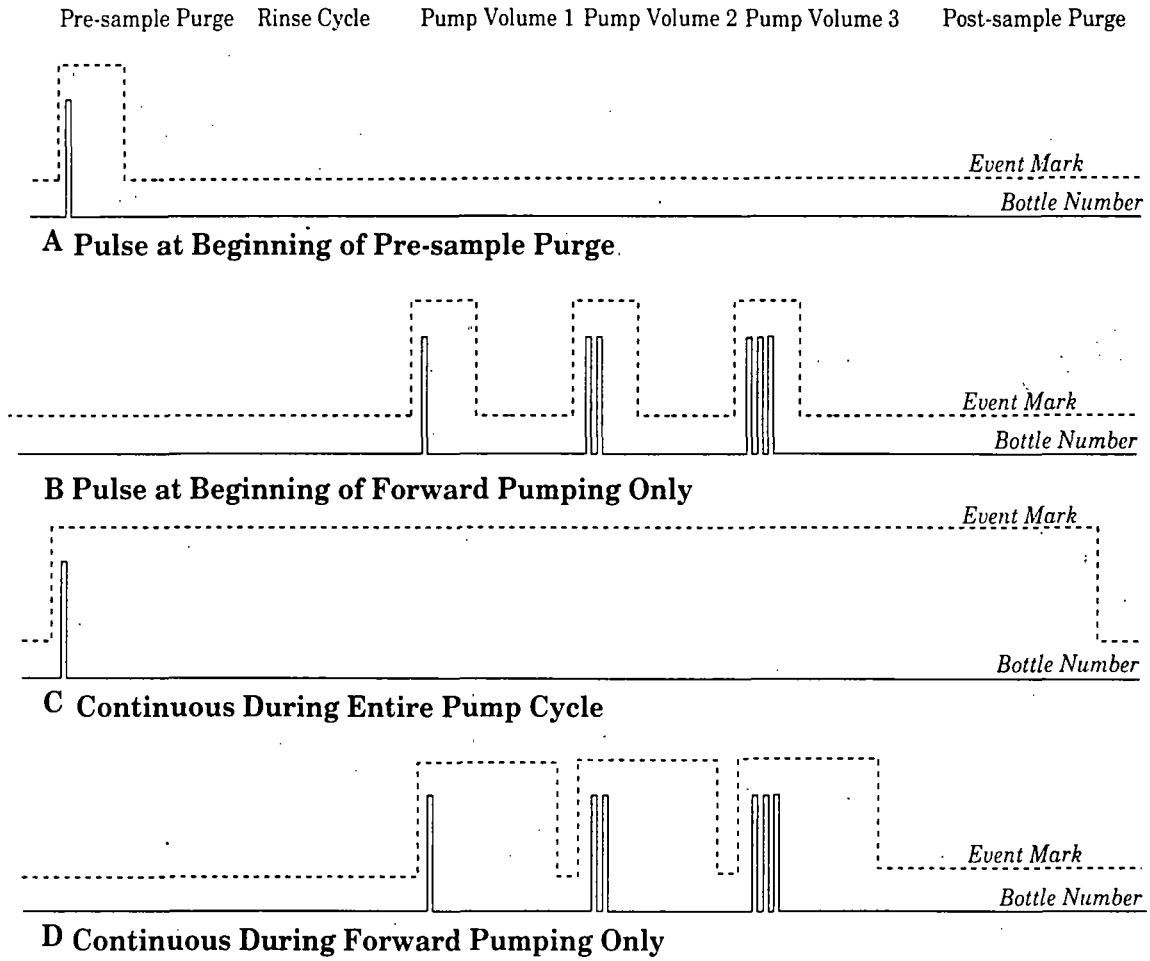

Pulse Signal Timing

The Pulse Signal setting will appear when you have selected "PULSE." Two options are available. The first option, "PURGE," is used to send a pulse at the beginning of the pre-sample purge. The second option, "FWD PUMPING," is used to send a pulse at the beginning of the sample delivery when the pump is running forward. (Display #332).

PURGE COUNTS

The Purge Counts option is used to override the number of pump counts needed to clear the suction line in both pre-sample purge and post-sample purge cycles. The pre-sample purge count is normally set to 150 counts and will be reset to this value if the sampler is re-initialized. The post-sample purge count is derived from the suction line diameter and length settings.

If your observations indicate that a greater or lesser number of pump counts in either purge is needed, you can change the count settings. Acceptable entries are between 0 and 9999 for both purges. A purge count can be obtained using the PUMP FORWARD or PUMP REVERSE keys; refer to *Keypad Description,* on page 23. (Display #'s 340 and 341).

TUBING LIFE

The Tubing Life option is used to set the number of pump counts needed to trigger the "Replace Pump Tubing" warning. You must reset the pump counter after replacing the pump tubing. The warning will be activated when the pump count reaches the entered value. If you consistently experience a tubing failure at a pump count that differs significantly from the current setting, enter that value here. The factory set value of 500,000 pump counts will deliver approximately 500 samples of 200 ml each, using a 3/8 inch × 10 ft vinyl suction line and a 5 ft suction head. (Display #350, 351, and 352).

PROGRAM LOCK

The Program Lock option allows you to protect program and configure settings with a pass-number. Select "ENABLE" to turn the protection on. When the Program Lock is enabled, each protected display can be viewed, but no values can be changed without first entering the pass-number: 3700. Once the pass-number has been entered, you can change any value or setting in either the program or configure sequence. (Display #360).

SAMPLER ID

The Sampler ID option allows you to enter a 10 character ID for the sampler. The ID number is used to identify sampling reports produced by the Isco Field Printer and in files created by SAMPLINK. The sampler is shipped from the factory with 10 dashes (-) entered for the ID. (Display #365).

Acceptable Characters

The ID field will accept digits, dashes, spaces, and periods. You can enter spaces, dashes, and periods with three of the control keys. Enter a space with the START SAMPLING key, a dash (-) with the manual SAMPLE KEY, and a period with the RESUME SAMPLING key.

RUN DIAGNOSTICS

Run Diagnostics is used to perform a number of diagnostic functions. This option contains the software revision number; tests the sampler's RAM, ROM, display, distributor, and pump; and allows for re-initializing RAM. The display information is discussed below in the order of appearance.

Software Revision Number

The sampler will display the software revision number for a short period of time.

Test RAM and ROM

The software revision display is replaced by the RAM and ROM test messages. A successful test is indicated by the messages "RAM PASSED TEST" or "ROM PASSED TEST." If either the RAM or ROM fail the test, the sampler will display one of the following messages: "RAM FAILED TEST" or "ROM FAILED TEST" and beep every three seconds until you turn the sampler off. If either the RAM or ROM fail their test, the sampler should be serviced. Contact Isco Customer Service for instructions on returning the sampler. Contact Isco Customer Service for assistance: (800) 228-4373.

LCD Test

After successful RAM and ROM tests, the sampler will then test the LCD by first filling the display with solid rectangles and then printing the alphabet and other characters. Each character position in the display should contain a character.

Pump Test

The next step tests the pump. During the test, the pump will run briefly and the display will indicate an "OFF/ON" number. The number should fall within the range of 50 to 200. If the count falls below 50 or exceeds 200, the pump should be serviced. A count near 100 is typical.

Distributor Test

Following the pump test, you can test the distributor. If you elect to test the distributor, the sampler will move the distributor to position 24, then return it to position 1. The positions are indicated on the display. If the message, "DISTRIBUTOR JAMMED" is displayed; check the routing of the pump tubing and the bottles in the tub. If the tubing and bottles are correctly positioned, the distributor drive mechanism may need servicing. (Display #370).

Re-initialize Controller

The final step allows you to re-initialize the sampler. If you select "NO," the sampler will return to the configure option list. If you select "YES," the sampler will reset a number of configuration and program settings, then turn the sampler off. (Display #371).

Table 6, on page 54 and **Table 7,** on page 55 list the re-initialized settings. Note: not all settings are reset. Set Clock, Bottles and Sizes, and Suction Line configure option settings remain unchanged to minimize the settings you would need to change if the sampler were accidentally re-initialized. The Pump Count total is not reset to maintain an accurate count for the Tubing Life Warning.

Exit Configuration

This option allows you to leave the configure sequence and return to the standby state. There are no input displays. Press the ENTER/PROGRAM key to exit the configure sequence. The configuration sequence can also be exited at any time using the EXIT PROGRAM key.

Extended Programming Mode

All sampling capabilities available in the basic programming mode are available in the extended programming mode; a listing of the capabilities is placed in **Table 5,** on page 45. The extended programming mode provides several additional capabilities: Nonuniform Time pacing, an additional multiplexing scheme (multiple bottle compositing), Sampling Stops and Resumes, program storage, etc.

The procedure used to program the sampler in the extended mode is the same as the procedure used to program the sampler in the basic programming mode. This procedure is outlined in *Basic Programming Mode Introduction,* on page 26. (To avoid duplication, the programming procedure is not repeated here.) There are some exceptions, however. The extended mode modifies the sections of the program sequence to allow you to take advantage of the additional features. The Sample Pacing section is extended to include settings for nonuniform times. The Sample Distribution section is modified to allow you to program the sampler for multiple bottle compositing. The procedure and displays used to program the sampler for bottles-per-sample and samples-per-bottle multiplexing, and sequential sampling are somewhat different. The section is also extended to allow you to switch multiplexed bottles or bottle sets after programmed periods of time. (With the extended mode, you can still switch bottles after a programmed number of samples have been deposited.) The Key Times section is extended to allow you to enter the time of the first bottle or bottle set change. If you have enabled the Sampling Stops and Resumes configure option, it will also include displays for sampling stops and resumes.

Each of these extended features is discussed briefly below. You may find it helpful to refer to **Figure 25,** on page 65 which charts the program sequence in the extended mode.

Table 6 Factory Configure Option Settings

CONFIGURE OPTION	DISPLAY NO.	FACTORY SETTING
SET CLOCK	210	Not Reset
BOTTLES AND SIZES	220,221,222,223	Not Reset
SUCTION LINE	230, 231, 232	Not Reset
LIQUID DETECTOR		
LIQUID DETECTOR	240	ENABLE
RINSES	241	0
ENTER HEAD MANUALLY	242	NO
# OF RETRIES	243	0
PROGRAMMING MODE	250	BASIC
LOAD STORED PROGRAM	255	
SAVE CURRENT PROGRAM	260	
FLOW MODE SAMPLING		
SAMPLE AT START TIME	270	NO
SAMPLE AT SWITCH TIMES	271	NO
NONUNIFORM TIME	280	Minutes
CALIBRATE SAMPLER	290	DISABLE
SAMPLING STOP/RESUME	300	DISABLE
SAMPLE AT STOP TIMES	301	NO
SAMPLE AT RESUME TIMES	302	NO
START TIME DELAY	310	2
ENABLE PIN		
SAMPLE UPON DISABLE	321	NO
SAMPLE UPON ENABLE	322	NO
RESET SAMPLE INTERVAL	323	NO
INHIBIT COUNTDOWN	324	NO
EVENT MARK		
CONTINUOUS/PULSE	330	CONTINOUS SIGNAL
PUMP CYCLE/FORWARD ONLY	331	FWD PUMPING ONLY
PURGE COUNTS		
PRE-SAMPLE COUNTS	340	150
POST-SAMPLE COUNTS	341	BASED ON LINE LENGTH
TUBING LIFE		
RESET PUMP COUNTER	351	NO
# PUMP COUNTS	352	Not Reset
PROGRAM LOCK	360	DISABLE
SAMPLER ID	365	Not Reset
RUN DIAGNOSTICS		

Table 7 Factory Program Sequence Settings

PROGRAM SETTING	DISPLAY NO.	FACTORY SETTING
[TIME, FLOW, PACED] SAMPLING	10	TIME
UNIFORM/NONUNIFORM TIME INTERVALS	11	UNIFORM
[TIME, FLOW, STORM] PACED SAMPLING	12	TIME
-- MINUTE DELAY TO FIRST TIMED SAMPLE	15	0 MINUTES
[DURING, AFTER] TIME MODE	16	DURING
SAMPLE EVERY -- HOURS, -- MINUTES	21	1 HOUR 0 MINUTES
SAMPLE EVERY ---- PULSES (1 - 9999)	22	10
TAKE -- TIMED SAMPLE EVENTS (1-MAX)	23	1
SAMPLE INTERVALS OF --MINUTES (1-99)	24	60
TAKE --- SAMPLES (1 - MAX)	25	10
QUANTITY AT INTERVAL 1. -- AT --- MINUTES	27	1 AT 60 MINUTES
-- BOTTLES PER SAMPLE EVENT (1 - 24)	30	1
-- SAMPLES PER BOTTLE (1-MAX)	31	1
MULTIPLEX SAMPLES? [YES, NO]	35	NO
[BOTTLES PER SAMPLE, SAMPLES PER BOTTLE]	36	SAMPLES PER BOTTLE
CHANGE BOTTLES BASED ON [TIME, SAMPLE]	40	COUNT
CHANGE SETS BASED ON [TIME, SAMPLE]	41	COUNT
CHANGE BOTTLES EVERY -- HOURS, -- MINUTES	42	2 HOURS 0 MINUTES
CHANGE SETS AFTER -- HOURS, -- MINUTES	43	2 HOURS 0 MINUTES
CHANGE BOTTLES AFTER -- SAMPLES	44	1
CHANGE SETS AFTER SAMPLES	45	1
SAMPLE CONTINUOUSLY? [YES, NO]	48	NO
SAMPLE VOLUMES OF --- ml EACH (10 - MAX)	50	200

PROGRAM SETTING	DISPLAY NO.	FACTORY SETTING
--- COMPOSITE SAMPLES (0 - MAX)	60	10
SUCTION HEAD OF -- FEET (1 - MAX)	70	10
ENTER START TIME? [YES, NO]	90	NO
STORM ENABLED AFTER HH:MM MM/DD	93	
ENTER FIRST SWITCH TIME? [YES, NO]	95	NO
-- STOP or RESUME TIMES (0 - 24)	100	0
MAX FLOW INTERVAL OF -- HOURS, --MINUTES	110	2 HOURS 0 MINUTES

Extended Mode Sample Pacing

In the extended programming mode, the Sample Pacing section allows you to select one of two types of time-pacing: uniform or nonuniform time intervals. Uniform time intervals are identical to the time intervals entered in the basic programming mode. Nonuniform times allow you to pace the sampler at irregular intervals. You can enter nonuniform intervals in two ways. The first method allows you to define the interval between each sample event in minutes. For example, you can program the sampler to take sample #2 after an interval of 10 minutes, sample #3 after an interval of 30 minutes, sample #4 after an interval of 60 minutes, and so on. Sample #1 would be taken at the start time. The second method allows you to enter a specific time and date for each sample event. For example, with nonuniform time pacing, samples can be collected at specific times and dates at irregular intervals: 6:00 am on April 15, noon on April 15, 7:00 am on April 16, and 1:00 pm (or 13:00 in military time) on April 16. If you have several sequences of nonuniform times, you can use the program storage feature to save the programs using each sequence.

Extended Mode Sample Distribution

The extended Sample Distribution section expands the multiplexing capabilities of the sampler. Both the bottles-per-sample and samples-per-bottle multiplexing are available; however, the procedure used to program them differs slightly from the procedure used in the basic programming mode. **Example 12,** on page 77 illustrates the bottles-per-sample multiplexing procedure; **Example 11,** on page 75 demonstrates the procedure used for samples-per-bottle multiplexing. The extended mode also offers multiple bottle compositing; refer to **Example 13,** on page 79.

In the extended programming mode, you can switch bottles or bottle sets after a programmed time period elapses or after a programmed number of samples have been deposited.

The displays used to specify the type of switches are shown in the Sample Distribution section of **Figure 25,** on page 65. Display #40 allows you to select either "TIME" or "SAMPLES." If you select "TIME," the bottles can be changed after a programmed period of time.

If you select "SAMPLES," the bottles can be switched after a programmed number of samples. In Display #41, which allows you to switch bottle sets, you can select either "TIME" or "SAMPLES/BTL." If you select "TIME," the bottle sets can be changed after a programmed period of time. If you select "SAMPLES/BTL," the bottle sets can be changed after a programmed number of samples. You can use select either "TIME," "SAMPLES," or "SAMPLE/BTL" settings with both time- and flow-paced sampling.

Extended Mode Sample Volumes

The extended mode Sample Volumes section is identical to the Basic Mode Sample Volume section.

Extended Mode Key Times

The extended mode Key Times section has two additional sets of displays which allow you to specify the time of the first bottle or bottle set change and to set up the sampling stop and resume times.

First Switch Time

The first switch time displays will appear only when you have specified bottle or bottle set changes based on time in the Sample Distribution section. If you select "TIME" rather than "SAMPLES/BTL" in the "CHANGE SETS BASED ON [TIME, SAMPLES/BTL]" display, you first will be asked if you want to enter a setting for the first switch time. If you respond "YES," you will be asked for the time of the first bottle or set change.

The first switch time setting allows you to control the times of each bottle switch without delaying the routine and thereby missing samples. For example, if you have programmed the sampler for time switches every hour and you want the switches to occur on the hour, you can set the time of the first switch at the next even hour, start the sampling routine early, and deposit samples in the first bottle set until the first switch time. At the first switch time, the distributor moves to the next bottle set. The first bottle set may not be completely filled; however, by starting the routine early, you can sample until the bottle switches are placed "on schedule" to avoid missing any samples. The first time switch displays are indicated by display #'s 95, 46, and 47 in **Figure 17,** on page 19.

If you do not enter a first switch time, the sampler will begin timing the switch interval from the start time for the routine and the first bottle or bottle set will receive samples for the full time period. Switch times are not available in STORM routines.

Stops and Resumes

The Stops and Resumes settings are available only when you have enabled the Sampling Stop/Resume configure option (see *Sampling Stop/Resume,* on page 49). You must first enter the number of stops and resumes, from 0 to 24. (Enter "0" if you want to omit the stop and resume settings without returning to the configure sequence and disabling the Stops and Resumes option.) Then enter the stop and resume clock times beginning with the first stop time. Refer to the Key Times section of **Figure 26**, display #'s 100, 101, and 102.

Start Times

This section discusses the sampler's start times. It begins by outlining the sequence of events preceding the start time for most sampling routines.

Sequence of events preceding sampling routine

After you program a sampler, you must start the sampling routine by pressing the start sampling key. However, depending on the program and configure option settings, the sampling routine may not start at soon as you press the key. The "Delay to Start Time" is the period between the time you press start sampling and the start time for the routine. **Figure 22** diagrams the sequence of events preceding the start time.

The start time for a routine is either the programmed start time or the time at which the delay to start time expires. The programmed start time is determined by entries made in Displays #90, #91, #92 and #93. The delay to start time is determined by the entry in Display #310 of the Start Time Delay configure option. These input displays are illustrated below. They are also illustrated in the program structure charts in **Figure 15,** on page 17 and **Figure 17,** on page 19.

Note: Unless the sampling routine contains a programmed start time (Displays #91, #92, or #93), the sampler will delay the start time according to the amount of time specified in the Start Time Delay configure option. A programmed start time entry always overrides any settings made in the Start Time Delay configure option.

Programmed start time displays (Program Sequence)

ENTER START TIME? [YES, NO]	Display #90.
TAKE FIRST SAMPLE AT HH:MM DD-MMM	Display #91 (time-paced sampling).
START FLOW COUNT AT HH:MM DD-MMM	Display #92 (flow-paced sampling).
STORM ENABLED AFTER HH:MM DD-MMM	Display #93 (storm-paced sampling).

Start Time Delay display (Configure Sequence)

---- MINUTE DELAY? TO START (0 - 9999)	Display #310 (Start Time Delay configure option).

Figure 22 Simplified Start Time Diagram

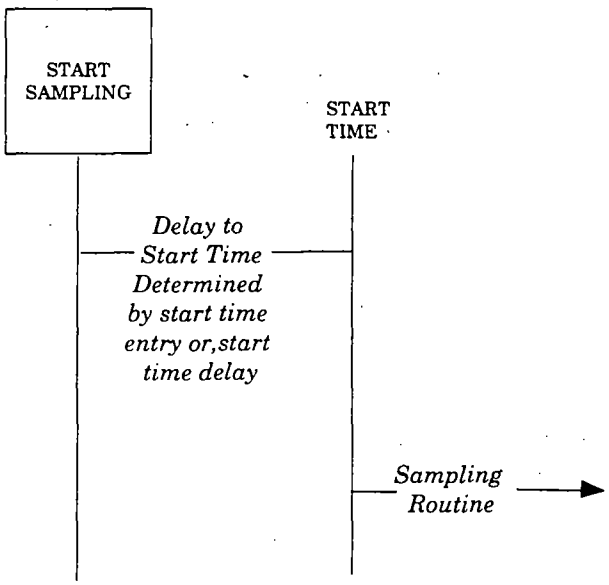

Isco 3200 and 4200 Series Flow Meters and 4100 Series Flow Loggers provide two essential functions for certain sampling applications. They send flow-pacing signals — flow pulses — to the sampler for flow-paced sampling. The second function provides disable (inhibit) or enable signals to the sampler. A sampler receiving a disable signal will suspend the sampling routine until it receives an enable signal.

The sampler will disregard a disable signal received from a flow meter during the delay to start time. If the sampler is disabled when the start time occurs, it will suspend the routine until it is enabled. Once enabled, the sampler will begin the time or flow intervals. The sampler will initiate a sample event when enabled for all time-paced routines. For flow-paced routines, it will initiate a sample event when the sampler is configured to take a sample upon enable in the Enable Pin configure option (see *Enable Pin,* on page 50).

If the sampler is enabled when the start time occurs, it will begin the routine. The sampler will initiate a sample event at the start time for all time-paced routines. It will initiate a sample event at the start time for flow-paced routines when configured for sample at start time in the Flow Mode configure option (see *Flow Mode Sampling,* on page 49). Refer to **Figure 23**. The diagram shows the sampler's response when enabled or disabled at the start time for most basic and extended mode routines.

Nonuniform Clock Times and Disable Signals

Figure 24 diagrams the sequence of events preceding a routine programmed for nonuniform clock times. Nonuniform clock time programming allows you to enter a specific time and date for each sample event. Samplers programmed with nonuniform clock times may skip a number of samples if disabled for long periods. If the sampler is disabled and subsequently enabled, it will initiate only one event to compensate for the skipped sample events even if several sample event times have been passed.

Note: Nonuniform clock time programming is designed to replace flow-pacing when a flow meter is not available at the site. Before using a sampler programmed for nonuniform clock times with a flow meter, be sure flow-pacing is not a more appropriate application.

Manual Sample Key and Programmed Start Times

The sampler will disregard the manual sample key during the delay to start time and during the disable period. The periods where the sampler disregards disable signals (Delay to Start) and the manual sample key (when disabled) appear in **Figures 23** and **24**.

Start Time Delay

Entries made in the Start Time Delay configure option affect the start times. The sampler's response varies according to specific entries: "0," "1," and entries greater than 1. *Start Time Delay,* on page 49 discusses the Start Time Delay configure option.

Figure 23 Start Time Diagram

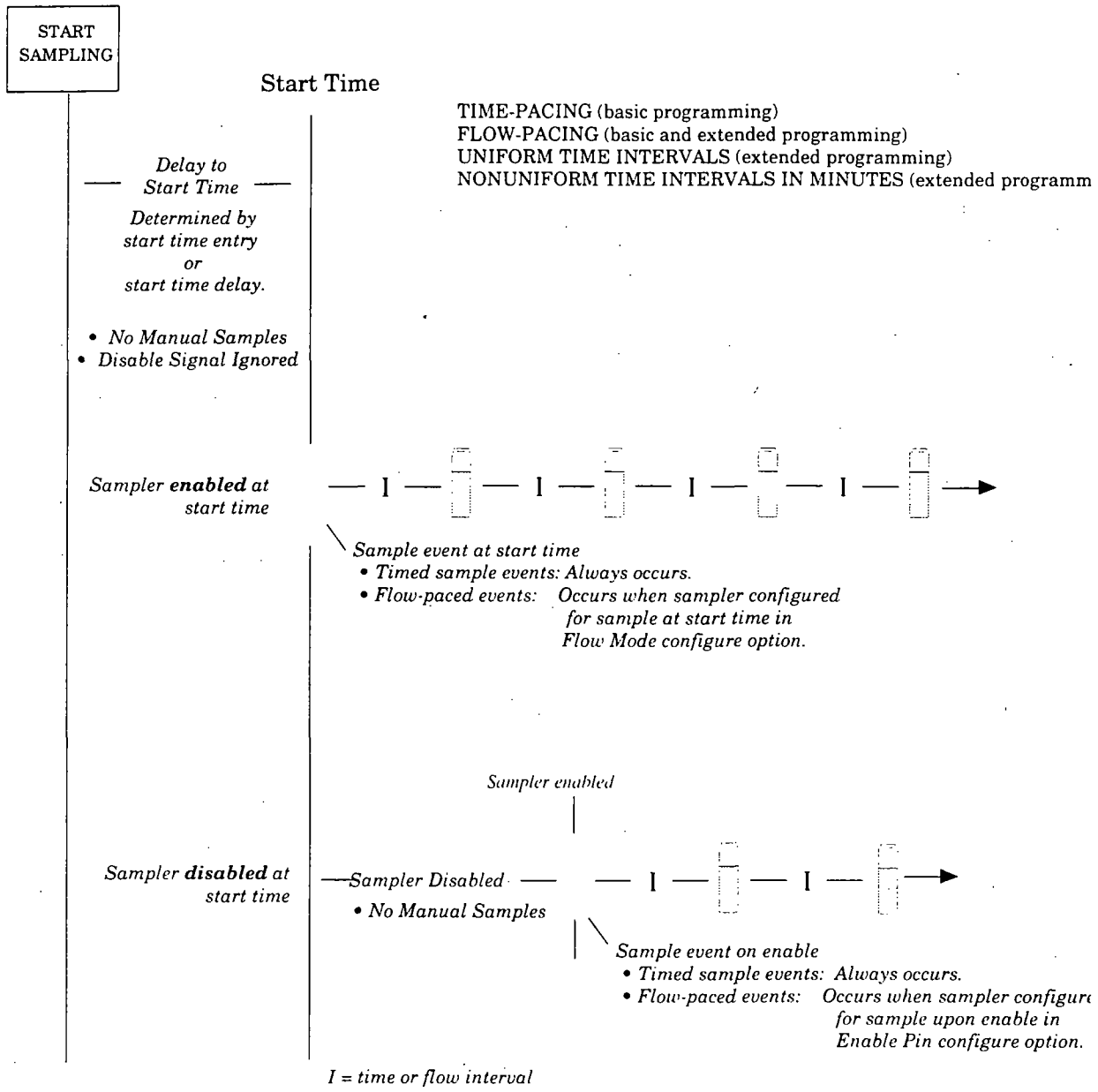

Figure 24 Start Time Diagram for Nonuniform Clock Time Routines

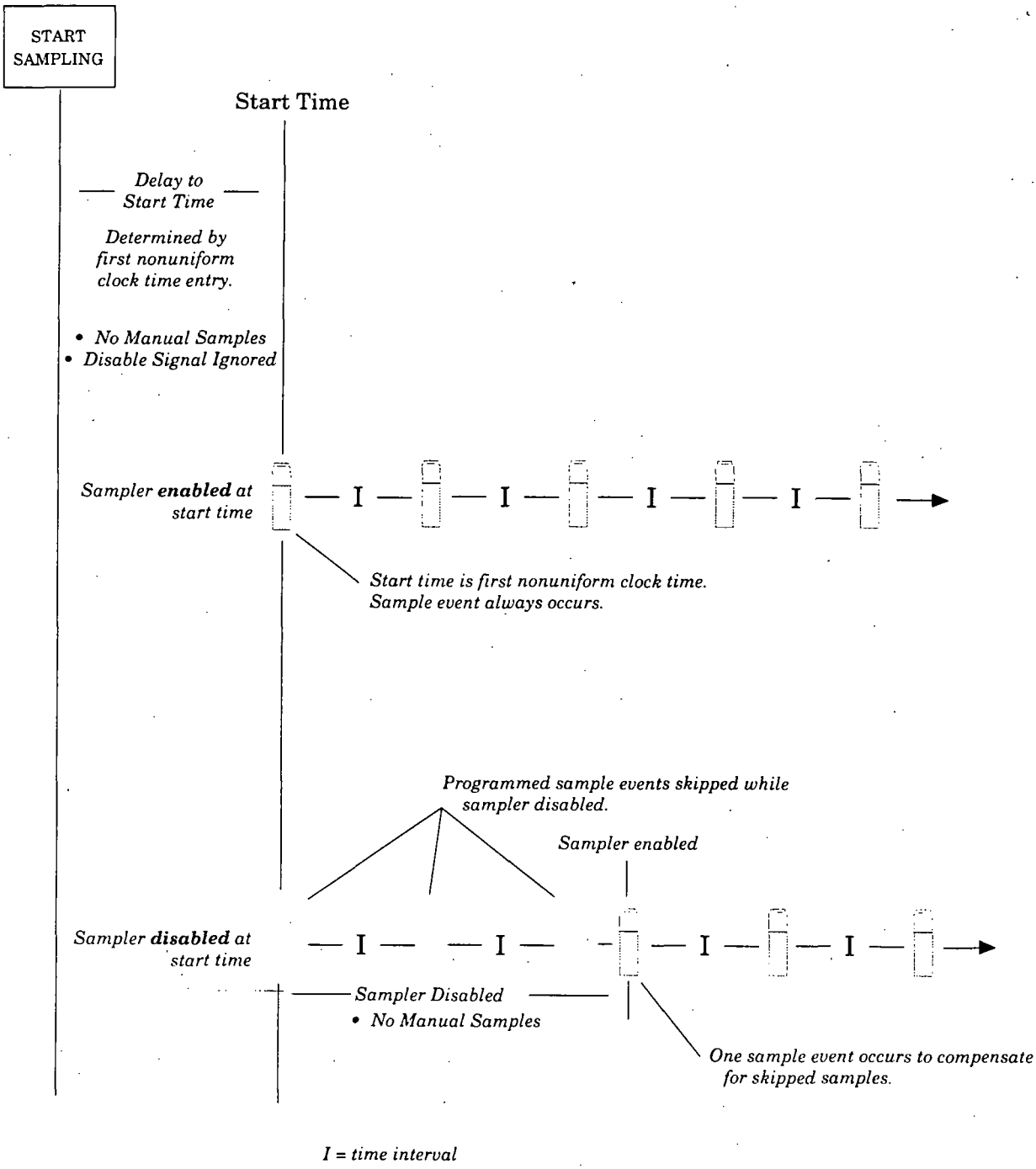

STORM PROGRAMMING

Many STORM water runoff monitoring permits require a first-flush grab sample within the first 30 minutes of the STORM event and a time- or flow-paced composite sample during the remainder of the event. The 3700 Sampler's STORM pacing is ideal for monitoring STORM events. storm pacing allows you to:

- Divide the sampler's bottles into two groups. The first bottle group receives the first flush grab sample. The grab sample is always a time-paced sample. The second bottle group receives either a flow-paced or time-paced sample.
- Collect samples for the second bottle group after collecting the first-flush samples or collect samples for both groups at the same time. See **Figures 29** and **28**.
- Distribute sample volumes to both bottle groups sequentially or in any of the three multiplexing schemes: bottles-per-sample, samples-per-bottle, or multiple bottle compositing.
- Use an Isco flow logger or flow meter to enable or disable the sampler according to the level or flow rate of the flow stream or to specific amount of rainfall.
- You can use a maximum flow interval setting to terminate a STORM routine that uses flow-paced sampling.

  The maximum flow interval setting limits the amount of time between flow-paced sample events. For example, if the flow rate declines so that the amount of time between flow-paced sample events exceeds a maximum flow interval setting of two hours, the sampler will terminate the routine when more than two hours elapses between events.

  The maximum flow interval setting allows the sampler to terminate the routine when the flow rate falls below an acceptable rate or drops off completely. This limits the sampling routine to one STORM event so that samples from multiple STORM events are not deposited into the bottle groups.

STORM SAMPLING CHECKLIST

This section provides two checklists: a list of suggested STORM monitoring equipment and a brief installation checklist. Notes on terminating a routine, manual sampling during a STORM routine, and a STORM routine's run state displays follow the checklist. **Example 17,** on page 86 contains a STORM programming example.

You can find additional information about STORM monitoring installations in the *Isco Storm Water Runoff Monitoring Pocket Guide*. The pocket guide contains the following information:

- How to connect the sampler and rain gauge to the flow meter.
- Programming examples for both the flow meter and the sampler.
- Starting and restarting the monitoring installation.

Equipment Checklist

The equipment listed below is suggested for typical STORM event monitoring:

- 3700 Sampler and power source.

  You can use a 2-, 4-, 8-, 12-, or 24-bottle configuration for STORM routines.
- An Isco flow logger or flow meter with power source.
- A Sampler-to-Flow Meter Connect Cable.

Optional Equipment Checklist

Optional: Rain gauge with cable and connector (Rain gauges are required for rain-event triggered sampling)

- Optional: FLOWLINK software (requires IBM-compatible computer system).

  Although the flow meter contains the sampler enable conditions most commonly used in storm water runoff monitoring, you can use the FLOWLINK system to download many additional sample enable conditions to the flow meter. Refer to the FLOWLINK Instruction Manual for more information.
- Optional: Interrogator communication line kit to connect a computer to the flow meter.

  This kit provides the computer-to-flow meter cabling. Isco Flow Meters and Flow Loggers can also be equipped with a modem to communicate with the FLOWLINK system over standard telephone lines.
- Optional: Solar Panel Battery Charger.

Installation Checklist

This checklist summarizes the four steps required to set up a storm monitoring installation:

1. Program and install the flow meter. Install the rain gauge, if used.

   You can program 3200 and 4200 Series Flow Meter for sampler enable control conditions from the flow meter front panel or use FLOWLINK and a computer to download the desired condition. 4100 Series Flow Loggers can only be programmed with Flowlink.

Note: You can program the sampler to start the routine at a specific time and date with a start time entry. You are not required to use a flow meter to enable the sampler.

2. Program and install the sampler.

   Programming the sampler includes adjusting certain configuration option settings as well as entering the STORM program settings. **Table 8** lists the configure options and their recommended STORM settings.

3. Connect the flow meter to the sampler with the connect cable or connect the flow meter to the master/slave pair with the "Y" connect cable.

4. Turn the flow meter on. Turn the sampler on and start the sampling routine by pressing the start sampling key.

   Connect the flow meter to the sampler and start the flow meter before you press the start sampling key on the sampler. If you are using the flow meter to detect a storm event and enable the sampler when the event occurs, the sampler must be disabled by the flow meter when you press the start sampling key. If the sampler is not disabled, it will begin the routine as soon as you press the key. This means that the flow meter must not detect the enable control conditions. The flow meter will disable a sampler only when the conditions are not satisfied.

Terminating the Routine

A STORM routine will terminate under the following conditions:

- The sampler completes the routine.
- A flow meter disables the sampler when the enable control condition is no longer satisfied. Once a sampler running a STORM routine has been disabled, however, it cannot be re-enabled if control conditions are satisfied again. You can prevent the sampler from being disabled by "latching" the sampler enable through the flow meter's control condition.

  It is particularly important to latch the sampler if you are using master/slave sampling. The master sampler that has been disabled by a flow meter cannot enable the slave sampler.
- The amount of time between flow-paced sample events exceeds the STORM routine's maximum flow interval setting.

Manual Samples

Manual sampling is not available during a STORM routine. If you press manual sample during a storm routine, the sampler will disregard the key.

Run State Displays

Run state displays for STORM routines are identical to displays used with conventional routines. However, the displays for the first and second bottle groups will alternate with each other.

Table 8 Recommended STORM Settings for Configure Options

Configure Option	Display No.	Recommended Setting
SET CLOCK	210	Enter correct time and date.
BOTTLES AND SIZES		
PORTABLE/REFRIG	220	Select "REFRIG."
1, 2, 4, 8, 12, 24	222	Select 2, 4, 8, 12, or 24. Do not select 1. If the sampler is configured for one bottle (composite sampling), the STORM branch will not be accessible.
BOTTLE VOLUME	233	
		FOR: 2 glass or plastic, enter 9400 ml 4 bottles, enter 3800 ml 8 plastic bottles, enter 1800 ml 12 plastic bottles, enter 2500 ml 24 plastic bottles enter 1000 ml 24 glass bottles, enter 350 ml
SUCTION LINE	230, 231, 232	Enter correct settings

Configure Option	Display No.	Recommended Setting
LIQUID DETECTOR		
LIQUID DETECTOR	241	0
RINSES	241	0
ENTER HEAD MANUALLY	242	NO
# OF RETRIES	243	
PROGRAMMING MODE	250	Select "Extended."
Load Stored Program	255	Load only a stored STORM program.
SAVE CURRENT PROGRAM	260	Not applicable.
FLOW MODE SAMPLING		
SAMPLE AT START TIME	270	Disregarded by STORM routines.
SAMPLE AT SWITCH TIMES	271	Disregarded by STORM routines.
NONUNIFORM TIMES	280	Disregarded by STORM routines.
CALIBRATE SAMPLER	290	Select "DISABLE"
SAMPLING STOP/RESUME	300	
SAMPLE AT STOP TIMES	301	Disregarded by STORM routines.
SAMPLE AT RESUME TIMES	302	Disregarded by STORM routines.
START TIME DELAY	310	Disregarded by STORM routines.
ENABLE PIN		
MASTER/SLAVE	320	Select "Disable" when using a single sampler for Storm monitoring.
SAMPLE UPON DISABLE	321	Disregarded by STORM routines.
SAMPLE UPON ENABLE	322	Disregarded by STORM routines.
RESET SAMPLE INTERVAL	323	Disregarded by STORM routines.
INHIBIT COUNTDOWN	324	Disregarded by STORM routines.
EVENT MARK		
CONTINUOUS/PULSE	330	Select Preferred Event Mark
PUMP/CYCLE/FWD ONLY	331	Select Preferred Event Mark
PURGE COUNTS		
Pre-sample counts	340	Enter Preferred Count.
Post-sample counts	341	Enter Preferred Count.
TUBING LIFE		
RESET PUMP COUNTER	351	Reset if required.
#PUMP COUNTS	352	Enter preferred count.
PROGRAM LOCK	360	Select "ENABLE" or "DISABLE," as preferred
SAMPLER ID	365	Enter appropriate Id.
RUN DIAGNOSTICS		No setting required.

PROGRAMMING THE SAMPLER FOR A STORM ROUTINE

The extended programming mode contains two program sequences. The first sequence contains the displays for time- and flow-paced routines. The second sequence contains the displays for STORM paced routines. **Figure 25** shows the displays for the first sequence.

The storm input displays are divided into three sections. Each section is marked in **Figures 25 through 27**. The first section contains the displays that control the pacing and distribution to the first bottle group. The second section contains the displays that control the pacing and distribution for the second bottle group. The third section controls the start time for the routine and may include calibration and manual suction head displays.

First Section: Settings for the First Bottle Group

The first section contains the input displays that:

- Set a delay to the first sample event of the first bottle group.
- Set the time-pacing for the first bottle group.
- Allocate the bottles for the first bottle group.
- Determine the sample distribution for the first bottle group: sequential, samples-per-bottle multiplexing, bottles-per-sample multiplexing, or multiple bottle compositing.

The "TIME MODE" message marks the beginning of the first section. This message is followed by Display #15, below.

-- MINUTE DELAY TO FIRST GROUP SAMPLE	Display #15

Use this display to set amount of time between the time the sampler is enabled and the first sample delivered to the first bottle group. (The sampler may be enabled at the start time.) The acceptable range of values for the delay to first group sample is 0 to 999 minutes. If the delay is zero, the sampler will take the first sample when enabled by the flow meter. Subsequent time-paced samples will occur at the time interval entered in Display #23.

How to Allocate Bottles to the Bottle Groups

Use the next three displays to determine the both the sample distribution and the number of bottles allocated to the bottle groups.

TAKE 2 TIMED SAMPLE EVENTS (1 - MAX)	Display #23

3 BOTTLES PER SAMPLE EVENT (1 - MAX)	Display #30

1 SAMPLES PER BOTTLE(1 - MAX)	Display #31

A bottle group can contain one or more bottles. You can allocate all bottles but one to the first bottle group. The STORM routine will automatically allocate the remaining bottles (or bottle) to the second bottle group. (It obtains the total number of bottles from the bottle number setting in the bottles and sizes configure option.) Refer to the displays above; a 24-bottle sampler programmed to distribute samples to three bottles at two sample events would allocate six bottles to the first bottle group. It would allocate the remaining 18 bottles to the second bottle group.

Sample Distribution and Sample Volumes for the First and Second Bottle Groups

STORM sampling supports sequential sampling as well as all three types of multiplexing: bottles-per-sample multiplexing, samples-per-bottle multiplexing, and multiple bottle compositing. These distribution schemes are available for both bottle groups. Because STORM programming is part of the extended programming mode, the sample distribution displays used (Display #'s 30 and 31) are identical to other extended mode programming routines. Refer to **Example 11** for an example of samples-per-bottle multiplexing, **Example 12** for bottles-per-sample multiplexing, and **Example 13** for multiple bottle compositing. To enter a sample volume for the first bottle group, simply enter the volume in Display #50.

Figure 25 Extended Programming Mode: Sample Pacing and Sample Distribution

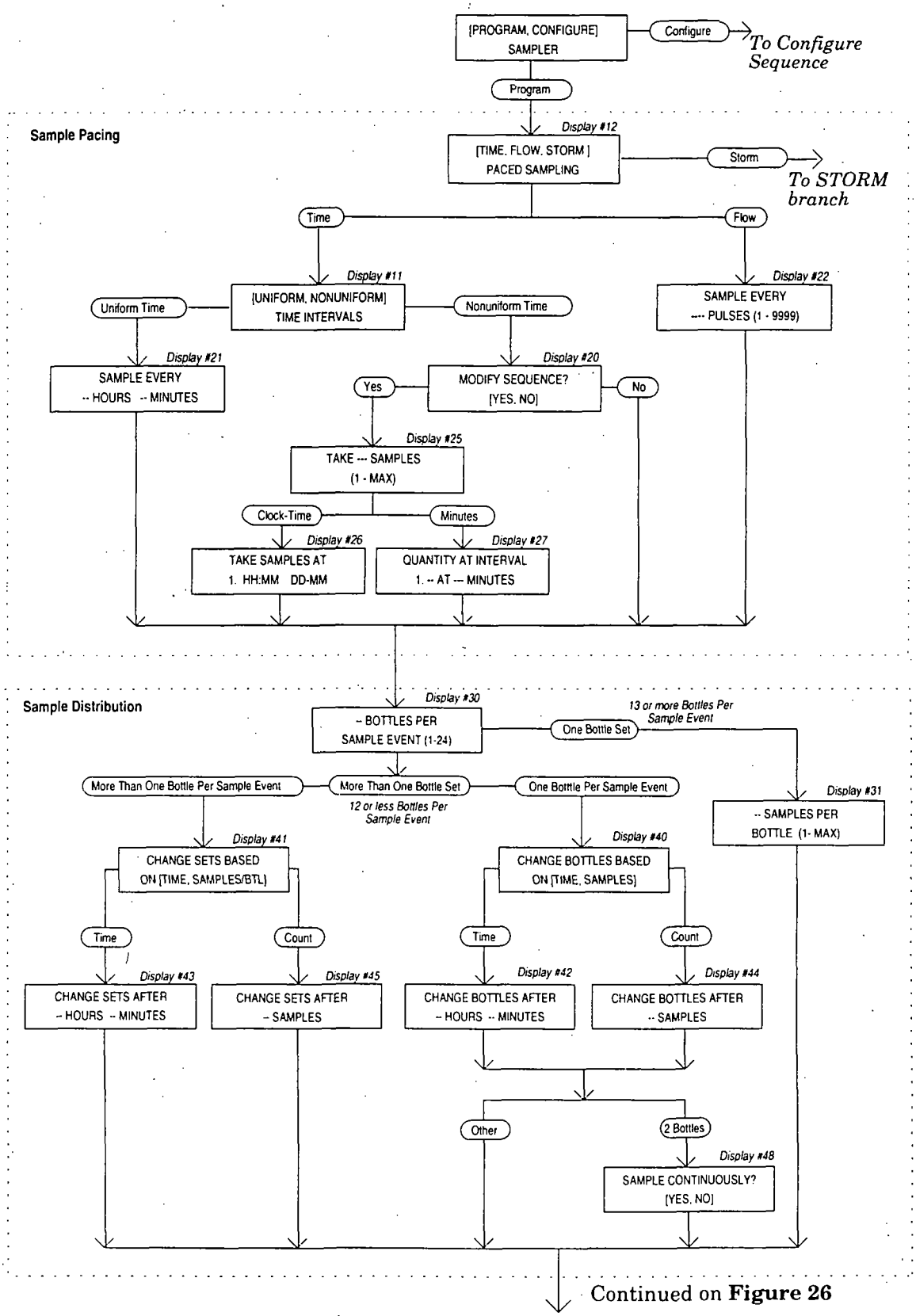

Continued on **Figure 26**

Figure 26 Extended Programming Mode: STORM Programming

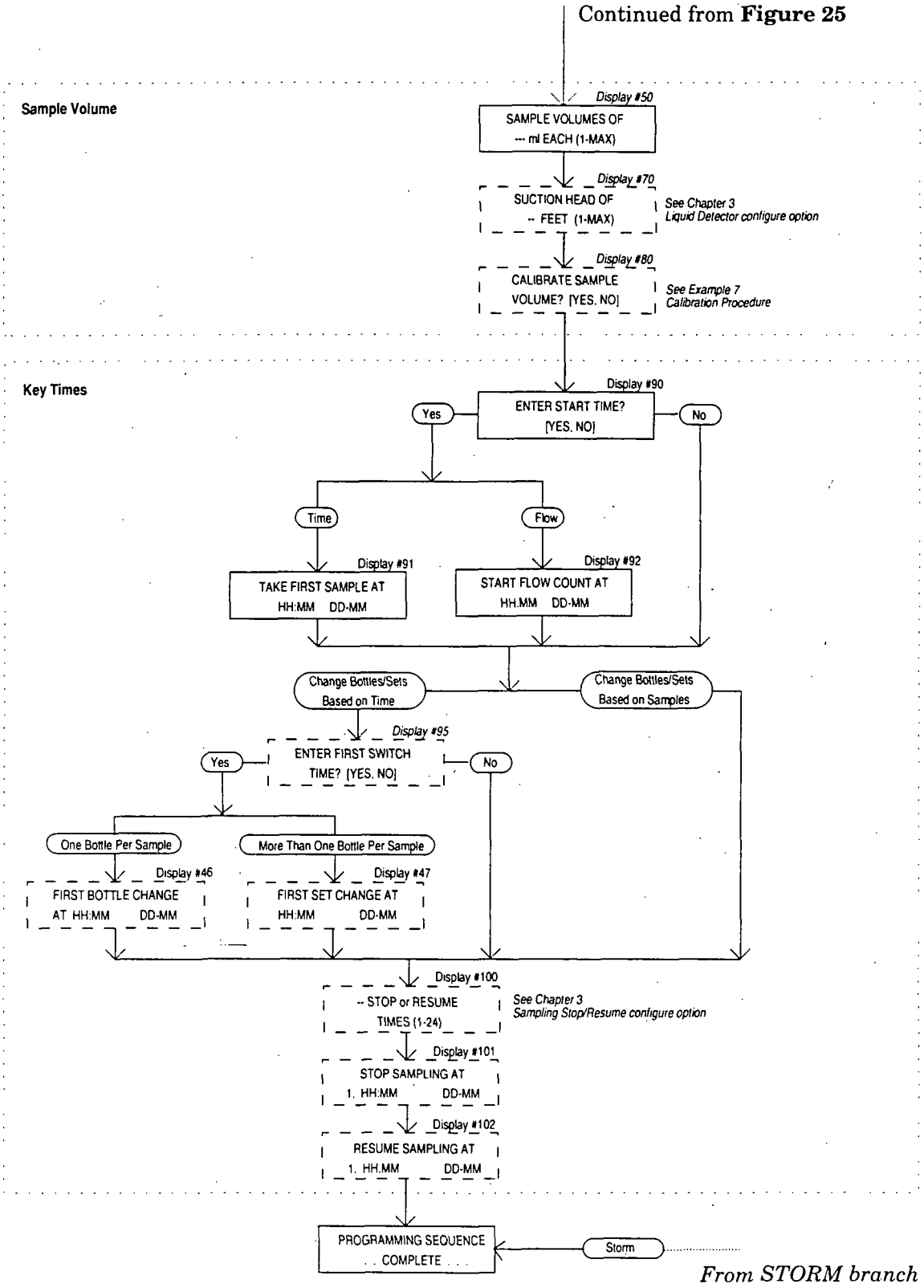

Figure 27 Extended Programming Mode: STORM Programming

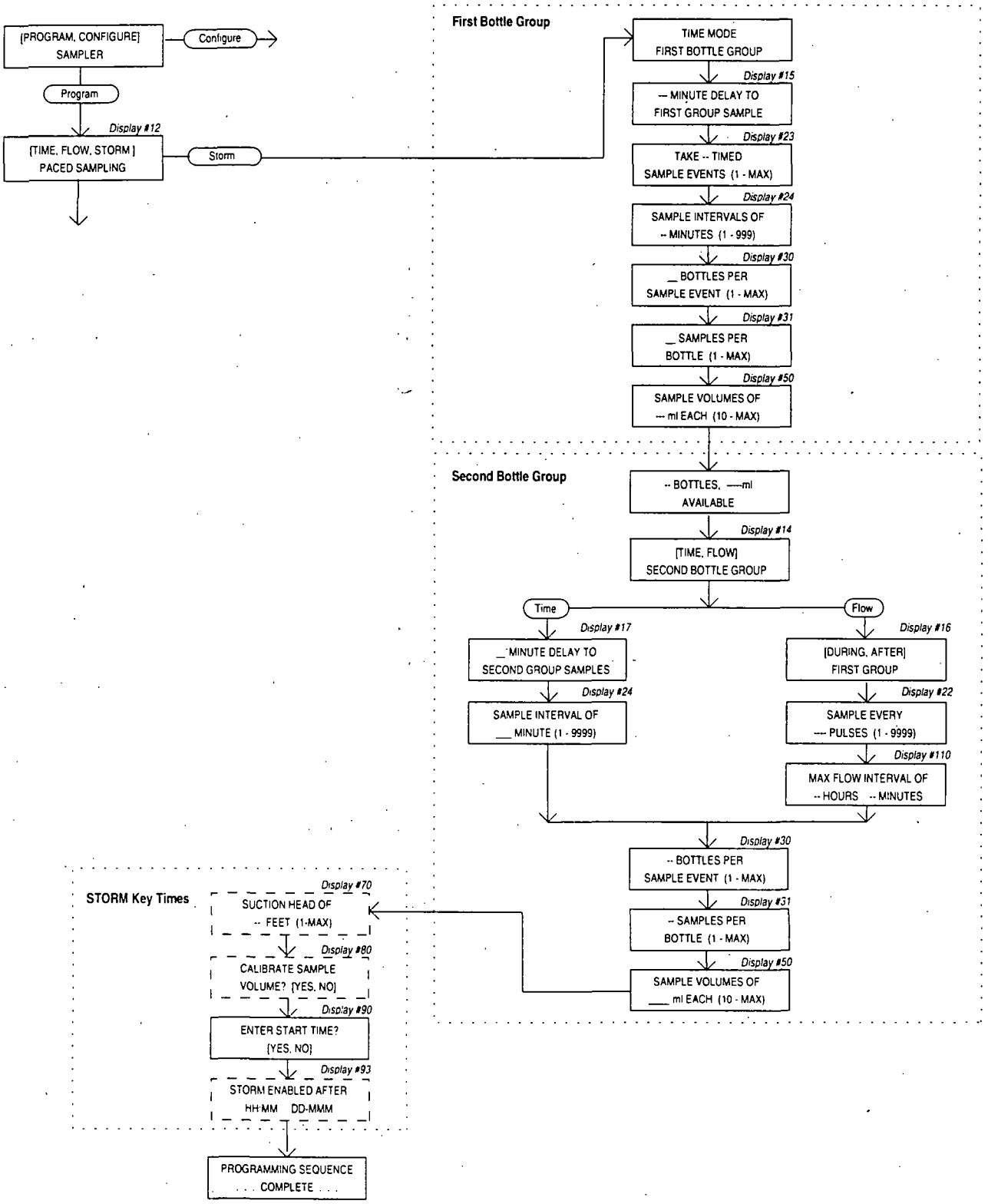

Second Section: Second Bottle Group

The second section contains the input displays for the second bottle group. It includes displays that:

- Set the pacing for the second bottle group.
- Determine when the sampler begins filling the second bottle group: during the same time period as the first bottle group or after it fills the first bottle group.
- Set the maximum flow interval.
- Determine the sample distribution for the second bottle group: samples-per-bottle multiplexing, bottles-per-sample multiplexing, or multiple bottle compositing.

After you've completed the entries for the first bottle group, the sampler will present the message:

-- BOTTLES, ----- ml AVAILABLE

This message marks the beginning of the second section. It reports the number of bottles allocated for the second bottle group and the total volume of their combined capacity. The sampler displays this information to help you enter the sample distribution scheme and sample volumes for the second bottle group. If the remaining number of bottles or the capacity is incorrect, reprogram the first section.

Pacing for the Second Bottle Group

The next display, Display #14, allows you to select time or flow pacing for the second bottle group.

[TIME, FLOW] SECOND BOTTLE GROUP	Display #14

Depending on your selection, the STORM sequence will follow one of the two paths shown for the second section in **Figure 25**.

Time-Pacing

When you select "TIME" from Display #14, two time-pacing displays (#17 and #24) will follow.

____ MINUTE DELAY TO SECOND GROUP SAMPLES	Display #17

SAMPLE INTERVAL OF ____ MINUTE (1 - 9999)	Display #24

Use Display #17 to set the delay to the second bottle group. Like the delay to the first group sample, the delay to the second group sample determines the period between the time the sampler is enabled and the time the first sample is deposited in the second bottle group. You can use this setting to fill the second bottle group during the same time the sampler fills the first bottle group or after the sampler fills the first bottle group. **Figure 28** shows a time diagram for a STORM routine that uses time pacing for both the first and second bottle groups.

To fill the second bottle group after the first, be sure amount of time you enter for the delay to second group is equal to (or greater than, if necessary) the delay to the first group plus the total amount of time required to fill the first group. The sampler will begin timing both delays (delay to first and delay to second bottle group) at the same time. Refer to the lower diagram in **Figure 28**.

Entries made in Display #'s 15, 23, and 24 (" -- MINUTE DELAY TO FIRST GROUP SAMPLE," "TAKE -- TIMED EVENTS," and "SAMPLE INTERVALS OF -- MINUTES") determine the amount of time required to fill the first bottle group. For example, if the delay to the first group were zero and the routine required two timed sample events at 30 minute intervals, the sampler would take 30 minutes to fill the first bottle group. The first sample event would occur after the programmed delay to group sample; the second sample event would occur 30 minutes later.

Use Display #24 to enter the time interval for the second bottle group. You can use any interval; you do not have to use the same time interval for the second bottle group as you used for the first group.

Figure 28 Storm Sampling: Time Pacing for the Second Bottle Group

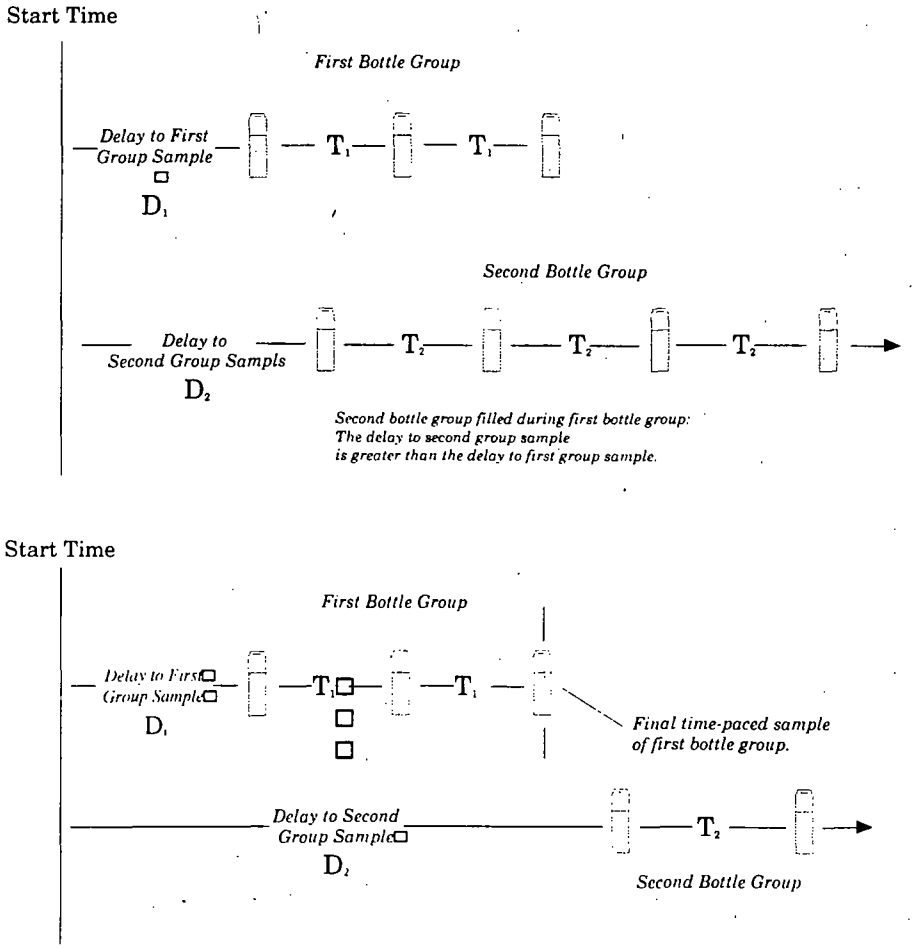

Flow-Pacing for the Second Bottle Group

If you need a flow-paced sample for the second bottle group, select "FLOW" from Display #14. Three flow pacing displays (#16, #22, and #110) will follow.

[DURING, AFTER] TIME MODE	Display #16
SAMPLE EVERY ---- PULSES (1 - 9999)	Display #22
MAX FLOW INTERVAL OF __ HOURS __ MINUTES	Display #110

Use Display #'16 to determine when the sampler will begin filling the second bottle group. Select "DURING" if you want the second bottle group filled during the same time period as the first bottle group. Select "AFTER" to begin the flow pacing for the second bottle group after the sampler fills the first bottle group. If you select "DURING," the sampler will begin counting flow pulses when it begins timing the delay to first group sample. The sampler will take the first sample of the second bottle group as soon at the sampler counts a full flow pulse interval. If you select "AFTER," the sampler will begin counting flow pulses after the last sample event of the first bottle group. Use Display #22 to enter the flow pulse interval for the second bottle group.

The third flow paced display allows you to enter the maximum flow interval. The acceptable range of values for the maximum flow interval is one minute to 99 hours and 59 minutes.

The sampler will terminate the sampling routine when the amount of time between flow-paced samples exceeds the limit set for the maximum flow interval. The maximum flow interval will terminate the routine even if all bottles of either bottle group have not been filled. Once the sampler terminates a routine, the sampler cannot be reenabled by the flow meter should the flow meter detect enable control conditions again.

Note: If the second bottle group requires flow-paced samples, the sampler may fill the second bottle group before it fills the first bottle group. This can occur when the flow rate monitored by the flow meter is higher than anticipated and the flow pulse interval has not been adjusted to reflect the higher rate. If this occurs, the sampler will continue the first bottle group until all samples have been taken. Adjust the pulse interval by:

- Reprogramming the flow meter to change the number of flow pulses sent to the sampler by the flow meter.
- Reprogramming the sampler to change the flow pulse interval in the flow-pacing segment of the STORM routine.
- Reprogramming both the flow meter and the sampler.

Figure 29 Storm Sampling: Flow Pacing for the second Bottle Group

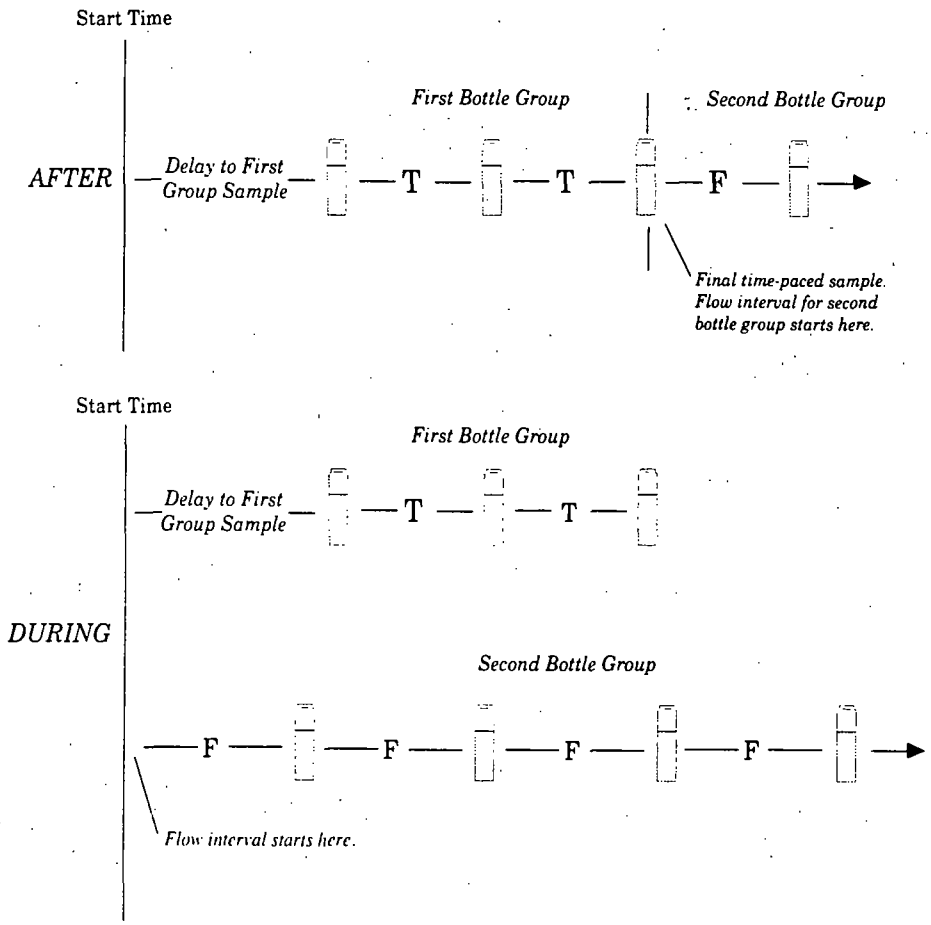

STORM Key Times

The third section, STORM Key Times, contains the displays used to

- Enter suction head measurements.
- Enable the calibration routine.
- Enter a start time for the STORM routine.

The input displays of the third section of the STORM program sequence vary according to configure option settings. The first two displays ("SUCTION HEAD OF -- FEET" and "CALIBRATE SAMPLE VOLUME") appear only if the sampler is configured to add them to the STORM program sequence. Entries made in the Liquid Detector configure option and the Calibrate Sampler configure option add or exclude these displays from the sequence. **Example 17** on page 86 does not include these displays since they are not normally necessary.

To enter a specific start time for the routine, select "YES" in Display #90 (illustrated in step 19 of Example 17). The sampler will prompt you to enter a start time with Display #93 (step 20). If you select "NO," the start time will be delayed by the amount set in the Start Time Delay configure option. After you've made these entries, the sampler will present the "PROGRAMMING SEQUENCE COMPLETE" message and return to standby.

Programmed Start Times, Start Time Delays, and Delays to Group Sample

Samplers programmed for STORM sampling respond to start-time delays and programmed start times in the same way as samplers programmed for any other basic or extended mode routines. The sampler will delay the STORM routine until the start time entered in the third segment of the STORM sequence. (See Display #93.) If the sampler is enabled by the flow meter at the start time, the sampler will begin to time the delay to the first bottle group. If the sampler is disabled by the flow meter at the start time, the sampler will suspend the routine until it becomes enabled. Once the sampler is enabled by the flow meter, the sampler will begin the delay to first timed sample event and continue the STORM routine.

As you can see, a STORM sampling routine has four delay periods that vary slightly with the programming entries. Every STORM routine will have a delay to start time and delay to first group sample. Depending on whether the second bottle group is time paced or flow paced, the third delay period will be either the delay to second group sample or the "During/After" delay.

- Delay to Start Time. The start time is simply the time the sampler begins the routine. The sampler begins timing the delay to start time when you press the start sampling key. The sampler will not check for an enable or disable signal from a flow meter, Liquid Level Actuator, or another sampler until the start time.

  The delay to start time is the amount of time between the time you press the start sampling key and the start time. The delay to start time is determined by the programmed start time entry for the STORM routine (Display #93) or the Start Time Delay configure option. The Start Time Delay, set in the configure option, can be from 0 to 999 minutes long. A programmed start time can be any date within 30 days of the sampler's current date.
- Delay to First Group Sample. The delay to first group sample is the period between the time the sampler is enabled (not the start time) and the time first sample volume is delivered to the first bottle group. Your entry in Display #15 determines the Delay to First Group.
- Delay to Second Group Samples. The delay to second group sample is the period between the time the sampler is enabled (not the start time) and the time the first sample volume is delivered to the second bottle group. This delay is determined by your entry in Display #17. You can enter a delay to second group sample only for time-paced second bottle groups.
- DURING/AFTER. This delay affects flow-paced second bottle groups. Like the delay to second group sample, the during/after delay determines when the sampler begins sampling for the second bottle group. Because the flow-paced sampling can consume unpredictable amounts of time, the STORM routine must use two specific events to mark the beginning of the flow intervals. These events are the time the sampler is enabled and the time the sampler completes the first bottle group.

  If you want the sampler to fill the second bottle group during the first bottle group, select "DURING" from Display #16. The sampler will begin counting flow pulses when the sampler is enabled. (If the sampler is enabled at the start time, the sampler starts counting flow pulses at the start time.)

  If you want the sampler to fill the second group after the sampler fills the first bottle group, select "AFTER." The sampler will begin counting flow pulses after it fills the first bottle group.

Programming Examples

The following examples demonstrate the steps used to program the sampler for several different sampling routines in the extended programming mode.

Each programming example concludes with the run state displays that appear for that routine. The examples assume you are familiar with the functions of the keys as discussed in *Keypad Description,* on page 23 and *Displays,* on page 25.

Note: Before programming a sampler in the extended programming mode, the sampler must be configured for extended programming. Refer to *Programming Mode,* on page 45 for a discussion of the Programming Mode configure option. **Example 1** on page 29 shows the steps required to access the Programming Mode option.

Foreign Languages and Metric Units of Measure

The 3700FR Sampler provides displays in French, Spanish, and German. Additionally, the software supports entries in metric units of measure. Metric units include volumes in milliliters, suction head and suction line length in decimeters, and suction line ID in millimeters.

Samplers using French, Spanish, and German language displays support metric units for suction line and suction head measurements. Samplers operating with English displays support either English or metric units for suction line and suction head measurements. (Sample volumes are always entered in milliliters, regardless of the language).

To program the sampler for foreign language displays, begin by placing the sampler in standby. Then, be sure the sampler is configured for extended programming. Access the language programming sequence by pressing the stop key five times. The standby display will be replaced by the input display illustrated below.

[English, German, Spanish, French]

Select the preferred language from this display. If you select French, Spanish, or German, the sampler will automatically convert English units of measure to metric units and return to standby. If you select English, a second input display (shown below) will appear. Select the units of measure from this display. After you've made the selection, the sampler will convert the units of measure as required and return to standby.

[U.S., Metric] Units

Figure 30 Start Time Diagram for STORM Routines

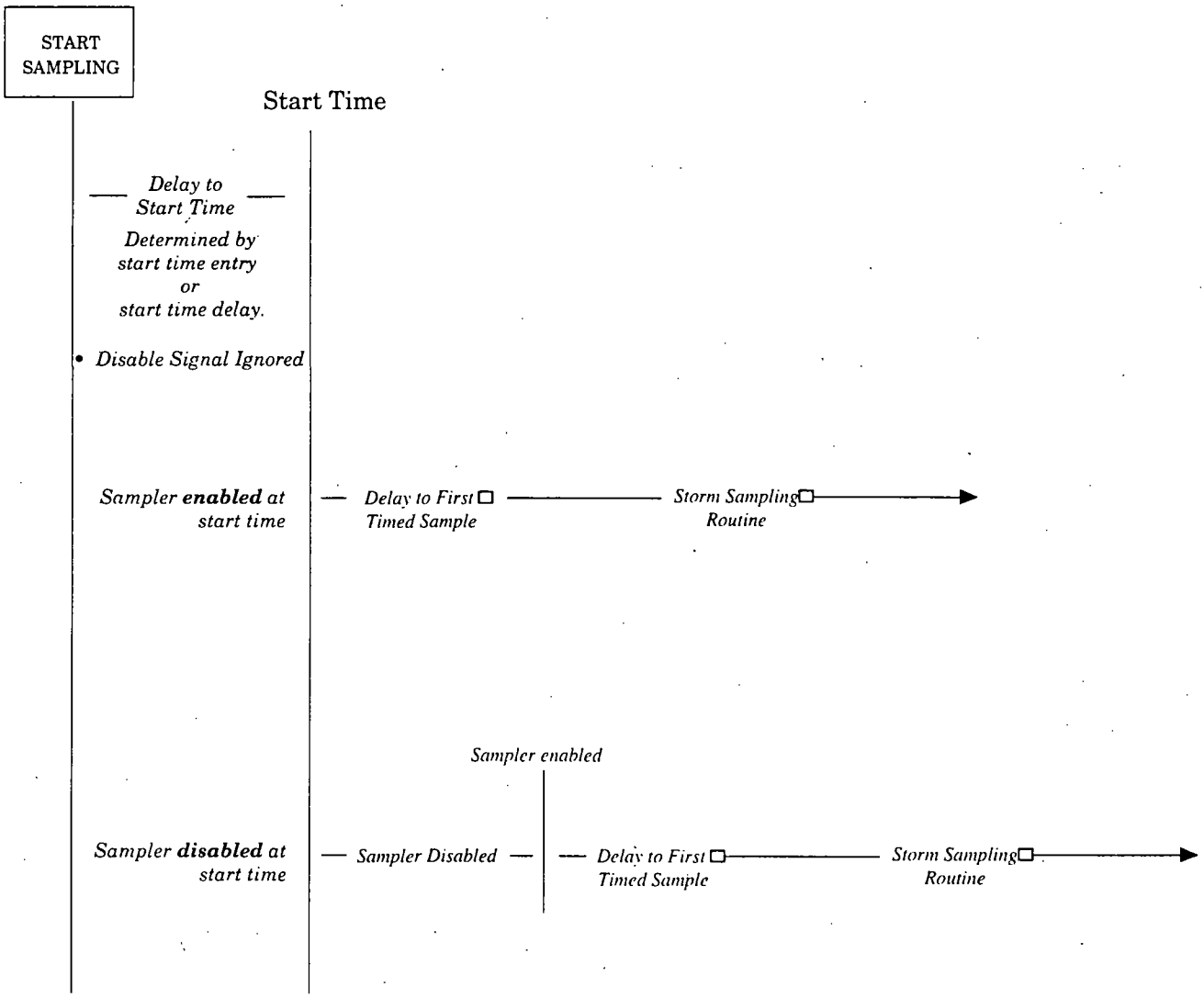

Example 10 Extended Time-paced Sequential Sampling

The following example programs the sampler to take time-paced samples at uniform time intervals of 30 minutes starting at 8:00 am, tomorrow morning. One 500 ml sample is to be placed in each bottle.

Step No.	Display	Procedure
1	... STANDBY ... 10:34:50 19-JUN-91	Press ENTER/PROGRAM to access the interactive state.
2	[PROGRAM, CONFIGURE] SAMPLER	Access the program sequence by selecting "PROGRAM."
3	[TIME, FLOW, STORM] PACED SAMPLING	Select "TIME."
4	[UNIFORM, NONUNIFORM] TIME INTERVALS	Select "UNIFORM."
5	SAMPLE EVERY 0 HOURS, 10 MINUTES	Enter "0" to set the hours at zero. Press ENTER/PROGRAM to store the number "0" and move to the minutes entry.
6	SAMPLE EVERY 0 HOURS, 30 MINUTES	Enter "30" to set the minutes entry to 30.
7	1 BOTTLES PER SAMPLE EVENT (1 - 24)	Enter "1" to set the number of bottles per sample event to 1.
8	CHANGE BOTTLES BASED ON [TIME, SAMPLES/BTL]	Select "SAMPLES/BTL."
9	CHANGE BOTTLES EVERY 1 SAMPLES (1 - 8)	Enter "1" to set the number of samples per bottle to 1.
10	SAMPLE VOLUMES OF 500 ml (10 - 1000)	Enter "500" to set the sample volume at 500 ml.
11	ENTER START TIME? [YES, NO]	Select "YES."
12	TAKE FIRST SAMPLE AT 8:00 20-JUN	Enter the start time and date: 8:00 tomorrow morning.
13	PROGRAMMING SEQUENCE COMPLETE ...	After this message is displayed briefly, the sampler will automatically return to the standby state.
14	... STANDBY ... 10:37:23 19-JUN-91	When the sampler is properly installed, press the START SAMPLING key to run the program.
15	START SAMPLING BOTTLE 1 (1-24)	To start the sampling routine with the first bottle, accept the blinking "1" by pressing the ENTER/PROGRAM key. If you want to start the routine with another bottle, enter the starting bottle number here.

Step No.	Display	Procedure
16	BOTTLE 1 AT 8:00 10:38:07	This display appears as the sampler counts down the time remaining to the start time. The first line reports the bottle which will receive the next sample volume. The second line reports the start time at the left and the current time on the right.
17	BOTTLE 1	When the start time occurs, the sampler will take the first sample. The sample event cycle begins with a pre-sample purge. During the purge, the display indicates the bottle number which will receive the sample volume.
	BOTTLE 1 PUMPING 500 ml	As soon as the pump runs forward to deliver the sample volume, the message on the second line appears and remains through the post-sample purge.
18	BOTTLE 2 AT 8:30 8:01:11	This display appears when the post-sample purge from the previous sample event is completed. It indicates the bottle number which is to receive the sample at the upcoming sample event. The second line displays the scheduled time for the next event on the left. The current time is displayed on the right.
19	↓ ↓	The cycle of displays is repeated for each bottle until the sampling routine is done.
20	DONE . . . 24 SAMPLES 8:10:35 21-JUN-91	When the routine is completed, this message appears. It reports the status of the routine ("DONE"), the total number of sample events, and the current time and date.

Example 11 Time-paced Multiplexed (Samples-Per-Bottle) Sampling

The following example programs the sampler to take time-paced samples at uniform time intervals of 15 minutes. At each sample event, one bottle will receive a sample volume of 75 ml. The bottles are to be switched every hour so that four sample volumes have been deposited into each bottle. The sampling routine is to start according to the programmed start time delay set in the Start Time Delay configure option.

Step No.	Display	Procedure
1	. . . STANDBY . . . 5:37:23 19-JUN-91	Press ENTER/PROGRAM to access the interactive state.
2	[, CONFIGURE] SAMPLER	Access the program sequence by selecting "PROGRAM."
3	[, FLOW, STORM] PACED SAMPLING	Select "TIME."
4	[, NONUNIFORM] TIME INTERVALS	Select "UNIFORM."
5	SAMPLE EVERY HOURS,30 MINUTES	Enter "0" to set the hours at zero. Press ENTER/PROGRAM to store the number "0" and move to the minutes entry.
6	SAMPLE EVERY 0 HOURS, MINUTES	Enter "15" to set the minutes entry to 15.

Step No.	Display	Procedure
7	1 BOTTLES PER SAMPLE EVENT (1 - 24)	Enter "1" to set the number of bottles per sample event to 1.
8	CHANGE BOTTLES BASED ON [TIME, SAMPLES/BTL]	Select "SAMPLES/BTL." We recommend bottle set changes be based on samples for time-paced sampling routines.
9	CHANGE BOTTLES EVERY 4 SAMPLES (1 - 8)	Enter "4" to set the number of samples per bottle to 4.
10	SAMPLE VOLUMES OF 75 ml (10 - 250)	Enter "75" to set the sample volume at 75 ml.
11	ENTER START TIME? [YES, NO]	Select "NO."
12	PROGRAMMING SEQUENCE COMPLETE . . .	After this message is displayed briefly, the sampler will automatically return to the standby state.
13	. . . STANDBY . . . 5:39:25 20-JUN-91	After the sampler is properly installed, press the START SAMPLING key to run the program.
14	START SAMPLING AT BOTTLE 1 (1-24)	To start the sampling routine with the first bottle, accept the blinking "1" by pressing the ENTER/PROGRAM key. If you want to start the routine with another bottle, enter the starting bottle number here.
15	1 OF 4, BOTTLE 1 AT 5:41 5:39:33	This display is used with samples-per-bottle multiplexing. The first line indicate the number of the upcoming sample and the total number of samples each bottle is to receive. It also indicates the current bottle number. Thus, this display indicates that the upcoming sample is the first of four samples and bottle one is to receive the next sample. The second line indicates the scheduled time of the sample. The current time is shown in the right corner as the sampler counts down to the next sample event time.
16	1 OF 4, BOTTLE 1	When the scheduled sample event time arrives, the second line will disappear while the sampler completes the pre-sample purge.
	1 OF 4, BOTTLE 1 PUMPING 75 ml	When the pump begins to pump forward to deliver the sample, the second line will indicate the sample delivery by displaying the word "PUMPING" and the sample volume being delivered. The message remains during the sample delivery and post-sample purge.
17	2 OF 4, BOTTLE 1 AT 6:15 6:00:26	When the sampling cycle is completed, the display will indicate the upcoming sample, shown here. This display indicates that the upcoming sample is the second of four samples; the current sample bottle is bottle 1. The sample event is scheduled for 6:15. The current time is just after 6:00.
18	2 OF 4, BOTTLE 1	The next displays illustrated here, in steps 18 through 19, show the displays as the sample volumes are deposited in bottle 1.
	2 OF 4, BOTTLE 1 PUMPING 75 ml	

Step No.	Display	Procedure
19	3 OF 4, BOTTLE 1 AT 6:30 6:15:27	
	↓ ↓	
20	1 OF 4, BOTTLE 2 AT 7:00 6:45:25	When the final sample has been deposited in the first bottle, the display changes to indicate the new sample bottle. This display indicates that the upcoming sample event will place the first of four sample volumes in bottle 2 at 7:00.
21	1 OF 4, BOTTLE 2	This display appears as the pump delivers the first sample to bottle 2.
	1 OF 4, BOTTLE 2	PUMPING 75 mL
22	↓ ↓	The cycle of displays is repeated for each bottle until the sampling routine is done.
23	DONE . . . 96 SAMPLES 6:10:35 21-JUN-91	When the routine is completed, this message appears. It reports the status of the routine ("DONE"), the total number of sample events, and the current time and date.

Example 12 Extended Flow-paced Multiplexed (Bottles-Per-Sample) Sampling

This example programs the sampler to take samples at intervals of 10 pulses. Samples will be multiplexed: 800 ml sample volumes will be placed into two bottles at each sample event. Each bottle is to receive only one sample volume. The routine will use the start time delay.

Step No.	Display	Procedure
1	. . . STANDBY . . . 10:35:23 19-JUN-91	Press ENTER/PROGRAM to access the interactive state.
2	[, CONFIGURE] SAMPLER	Access the program sequence by selecting "PROGRAM."
3	[TIME, , STORM] PACED SAMPLING	Select "FLOW."
4	SAMPLE EVERY PULSES (1 - 9999)	Enter "10" to set the pulse interval to 10 pulses.
5	BOTTLES PER SAMPLE EVENT (1 - 24)	Enter "2" to set the number of bottles per sample event to 2.
6	CHANGE SETS BASED ON [TIME,]	Select "SAMPLES."

Step No.	Display	Procedure
7	CHANGE SETS EVERY 1 SAMPLES (1 - 8)	Enter "1" to set the number of samples per bottle to 1.
8	SAMPLE VOLUMES OF 800 ml (10 - 1000)	Enter "800" to set the sample volume at 800 ml.
9	ENTER START TIME? [YES, NO]	Select "NO."
10	PROGRAMMING SEQUENCE COMPLETE . . .	After this message is displayed briefly, the sampler will automatically return to the standby state.
11	. . . STANDBY . . . 10:37:23 19-JUN-91	When the sampler is installed, press the START SAMPLING key to run the program.
12	START SAMPLING AT BOTTLE 1 (1-23)	To start the sampling routine with the first bottle, accept the blinking "1" by pressing the ENTER/PROGRAM key. If you want to start the routine with another bottle, enter the starting bottle number here.
13	START FLOW COUNT AT 10:38 20-JUN	This display appears after you press the START SAMPLING key to start the routine. It reports the scheduled start time on the first line. The second line reports the current time and date.
14	BOTTLES 1- 2 AFTER 10 PULSES	When the scheduled start time arrives, the sampler will begin to count flow pulses. This display indicates the bottles which will receive sample volumes at the upcoming sample event. (If the bottle set consisted of four bottles, the first line of the display would read, "BOTTLES 1 - 4.") The number of flow pulses remaining to the sample event is displayed on the second line.
15	BOTTLES 1- 2 AFTER 9 PULSES	The second line of the display changes as each flow pulse is received.
16	↓ ↓	
17	BOTTLES 1- 2 AFTER 1 PULSES	This display shows one pulse remaining until the sample event.
18	BOTTLE 1	When the tenth pulse is received, the display will display the current bottle number, only.
	BOTTLE 1 PUMPING 800 ml	When the pump begins to run forward to deliver the sample volume, the second line appears. After the pump completes the sample delivery, it reverses to purge the liquid from the pump tube past the liquid detector. The suction line is not completely purged; instead, the liquid is pumped just past the liquid detector. At the end of the pump tube purge, the distributor moves to the next bottle of the set. The display remains unchanged until the distributor relocates to the next bottle of the set.

Step No.	Display	Procedure
19	BOTTLE 2 PUMPING 800 ml	As the distributor moves to the next bottle, the bottle number reported in the display changes to indicate the bottle number. The message, "PUMPING 800 ml," will remain on the display. When the distributor reaches the correct position over the current bottle, the pump runs forward to deliver the sample volume. When the delivery is completed, the pump reverses to complete the post-sample purge.
20	BOTTLES 3- 4 AFTER 10 PULSES	At the end of the post-sample purge, the display changes to indicate the bottle numbers of the next bottle set. The display will change as it receives each flow pulse.
21	↓ ↓	The cycle is repeated until the sampling routine is completed.
22	DONE . . . 12 SAMPLES 6:10:35 21-JUN-91	When the routine is complete, the display will indicate the status of the routine ("DONE"), the number of sample events, and the current time and date.

Example 13 Extended Flow-paced Multiplexed (Multiple Bottle Compositing) Sampling

In this example, 100 ml samples are taken every 1000 flow pulses and deposited into two bottles. To avoid missing samples, the routine starts immediately. To place the bottle-set changes at the top of the hour, the routine samples until 12:00, the time of the first bottle-set change. Then, bottle sets change occur every two hours. The number of samples in each bottle set vary as the flow rate varies. If at least one sample is desired in each bottle, the sampler should take a sample at the start and switch times. See *Flow Mode Sampling,* on page 49.

Step No.	Display	Procedure
1	. . . STANDBY . . . 10:34:50 19-JUN-91	Press ENTER/PROGRAM to access the interactive state.
2	[, CONFIGURE] SAMPLER	Access the program sequence by selecting "PROGRAM."
3	[TIME, , STORM] PACED SAMPLING	Select "FLOW."
4	SAMPLE EVERY PULSES (1 - 9999)	Enter "1000" to set the pulse interval to 1000 pulses.
5	BOTTLES PER SAMPLE EVENT (1 - 24)	Enter "2" to set the bottles per sample event to 2. Each bottle set will consist of two bottles.
6	CHANGE SETS BASED ON [, SAMPLES/BTL]	Select "TIME."
7	CHANGE SETS EVERY HOURS 0 MINUTES	Enter "2" to switch bottle sets every two hours. Press the ENTER/PROGRAM key to advance to the minutes entry.
8	CHANGE SETS EVERY 2 HOURS MINUTES	Press ENTER/PROGRAM to accept an entry of "0" for minutes.

Step No.	Display	Procedure
9	SAMPLE VOLUMES OF 100 ml (10 - 330)	Enter "100" to set the sample volume at 100 ml.
10	ENTER START TIME? [YES, NO]	Select "NO.
11	ENTER FIRST SWITCH TIME? [YES, NO]	Select "YES."
12	FIRST SET CHANGE AT 12:00 19-JUN	Enter the time at which you want the sampler to move to the second bottle set. At the first bottle set change, 12:00, the bottle set changes will be placed on schedule.
13	PROGRAMMING SEQUENCE COMPLETE . . .	After this message is displayed briefly, the sampler will automatically return to the standby state.
14	. . . STANDBY . . . 10:37:23 19-JUN-91	When the sampler has been correctly installed, press the START SAMPLING key to run the program.
15	START SAMPLING AT BOTTLE 1 (1-23)	To start the sampling routine with the first bottle, accept the blinking "1" by pressing the ENTER/PROGRAM key. If you want to start the routine with another bottle, enter the starting bottle number here.
16	START FLOW COUNT AT 10:39 19-JUN	This display appears after you press the START SAMPLING key to start the routine. The scheduled start time is reported on the first line. The second line reports the current time and date.
17	SAMPLE 1, BTLS 1- 2 AFTER 1000 PULSES	This display alternates with the display illustrated below. The first line indicates the sample event number and the bottle numbers of the current bottle set. The second line is used to indicate the number of flow pulses remaining until the sample event is initiated.
	NEXT SET CHANGE AT 12:00 19-JUN	This display indicates the time and date of the next bottle set change.
18	SAMPLE 1, BOTTLE 1	This display appears when the sample event is initiated. It reports the sample number and the receiving bottle number on the first line during the pre-sample purge.
	SAMPLE 1, BOTTLE 1 PUMPING 100 ml	When the pump begins to run forward to deliver the sample, the second line appears; it reports the sample volume.
19	SAMPLE 1, BOTTLE 2 PUMPING 100 ml	When the sample delivery has been completed for the first bottle of the set, the distributor moves to the second bottle.
20	SAMPLE 2, BTLS 1- 2 AFTER 1000 PULSES	After the bottles of the set have each received a sample volume, the alternating pair of displays re-appear.
21	NEXT SET CHANGE AT 12:00 19-JUN	

Step No.	Display	Procedure
22	SAMPLE 2, BOTTLE 1	When the next sample event occurs, this display reports the current sample event and the current bottle. When the sample delivery is completed, the distributor will move to the next bottle of the set and the following display will appear.
	SAMPLE 2, BOTTLE 1 PUMPING 100 ml	
23	SAMPLE 2, BOTTLE 2 PUMPING 100 ml	This cycle will be repeated, as samples are deposited in the bottles of the set. The sample number will increase with each sample deposited until the set change.
24	SAMPLE 1, BTLS 3- 4 AFTER 1000 PULSES	When the bottle sets are changed, the sample event number is reset to one. The bottle numbers of the new current set is reported.
	NEXT SET CHANGE AT 2:00 19-JUN	
25	↓ ↓	The cycle of displays is repeated for each bottle until the sampling routine is done.
26	DONE . . . 96 SAMPLES 6:10:35 21-JUN-91	When the routine is completed, this message appears. It reports the status of the routine ("DONE"), the total number of sample events, and the current time and date.

Example 14 Nonuniform Time-paced Sequential Sampling

The following example programs the sampler to take time-paced samples at nonuniform time intervals. This example assumes the sampler is configured for extended programming and that it connected to a Liquid Level Actuator. The Actuator will inhibit the sampler until the liquid level rises to contact the Actuator probe.

The sampler is to take 24 samples: the first samples are to occur at 10 minute intervals for an hour, the following samples at 20 minute intervals for an hour, and the remaining samples at 30 minute intervals. One 500 ml sample is to be placed in each bottle. Although this example assumes that nonuniform times are being used with the Actuator, uniform time intervals or flow intervals can be used with the Actuator as well.

Step No.	Display	Procedure
1	. . . STANDBY . . . 10:34:50 19-JUN-91	Press ENTER/PROGRAM to access the interactive state.
2	[, CONFIGURE] SAMPLER	Access the program sequence by selecting "PROGRAM."
3	[, FLOW, STORM] PACED SAMPLING	Select "TIME."
4	[UNIFORM,] TIME INTERVALS	Select "NONUNIFORM."
5	MODIFY SEQUENCE? [, NO]	Select "YES" to modify the sequence of nonuniform time entries.

Step No.	Display	Procedure
6	TAKE 24 SAMPLES (1-999)	Enter the total number of samples: "24." This entry should always include the sample taken at the start time.
7	QUANTITY AT INTERVAL 1. 5 AT 10 MINUTES	Enter the number of samples to occur at the first interval. The sampler is to take samples at 10 minute intervals for an hour or 6 samples in the first hour. Since the first sample is taken at the start time, the remaining five samples will occur at the 10 minute interval.
8	1. 5 AT 10 MINUTES 2. 3 AT 20 MINUTES	When you have completed the first entries, the display will "roll" to move the first interval entries to the first line, and add the second line entries for the next series of samples and intervals. Enter the next entries: "3" samples at "20" minutes.
9	2. 3 AT 20 MINUTES 3. 15 AT 30 MINUTES	Enter the third set of samples and intervals, "15" samples at "30" minutes.
10	1 BOTTLES PER SAMPLE EVENT (1 - 24)	Enter "1" to set the number of bottles per sample event to 1.
11	CHANGE BOTTLES BASED ON [TIME, SAMPLES]	Select "SAMPLES."
12	CHANGE BOTTLES EVERY 1 SAMPLES (1 - 50)	Enter "1" to set the number of samples per bottle to 1.
13	SAMPLE VOLUMES OF 500 ml (10 - 1000)	Enter "500" to set the sample volume at 500 ml.
14	ENTER START TIME? [YES, NO]	Select "NO."
15	PROGRAMMING SEQUENCE COMPLETE . . .	After this message is displayed briefly, the sampler will automatically return to the standby state.
16	. . STANDBY . . . 10:37:23 19-JUN-91	Press the START SAMPLING key to run the program.
	Run State Displays	**Comment**
17	START SAMPLING BOTTLE 1 (1-24)	To start the sampling routine with the first bottle, accept the blinking "1" by pressing the ENTER/PROGRAM key. If you want to start the routine with another bottle, enter the starting bottle number here.
18	SAMPLER INHIBITED! 10:35 20-JUN-91	This display appears while the Actuator is inhibiting the sampler. The second line indicates the current time and date.
19	BOTTLE 1 AT 11:26 11:25:47	This display appears when the sampler becomes enabled and counts down the time remaining to the start time. The first line reports the bottle which will receive the next sample volume. The second line reports the start time at the left and the current time on the right.

Step No.	Display	Procedure
20	BOTTLE 1	When the start time occurs, the sampler will take the first sample. The sample event cycle begins with a pre-sample purge. During the purge, the display indicates the receiving bottle number.
	BOTTLE 1 PUMPING 500 ml	As soon as the pump runs forward to deliver the sample volume, the message on the second line appears. This message remains through the post-sample purge.
21	BOTTLE 2 AT 11:36: 11:26:11	This display appears when the post-sample purge from the previous sample event is completed. It indicates the bottle number which is to receive the sample at the upcoming sample event. The second line displays the scheduled time for the next event on the left; the current time is displayed on the right.
22	↓ ↓	The cycle of displays is repeated for each bottle until the sampling routine is done.
23	DONE . . . 24 SAMPLES 8:10:35 21-JUN-91	When the routine is completed, this message appears. It reports the status of the routine, "DONE;" the total number of sample events; and the current time and date.

Example 15 Entering Nonuniform times as Specific Clock Times

Nonuniform times can be entered in either the method shown above, in **Example 14** on page 81, or by specifying a clock time and date for each sample. The abbreviated example below shows the displays used to enter the clock times. The type of display, clock time or minutes, used in the program sequence is controlled by the settings in the Nonuniform Times configure option; you must specify either clock time or minutes in that configure option.

Step No.	Display	Procedure
1	TAKE SAMPLES AT 1. 06:00 19-JUN	Enter the time and date for the first sample event. Times and dates are entered on the second line of the display.
2	1. 06:00 19-JUN 2. 07:00 19-JUN	Enter the time and date for the second sample event. The controller will guess a time at the hour succeeding the previously entered time.
3	2. 06:30 19-JUN 3. 07:00 19-JUN	Enter the time and date for the third sample event.
4	↓ ↓	Continue to enter times and dates for each sample event. After all sample event times have been entered, the sample distribution section of the programming sequence will appear.

Example 16 Extended Time-paced Sequential Sampling Using Stops and Resumes

The following example programs the sampler for time-paced samples at intervals of 15 minutes, starting at 6:00 am on the following day and placing one 500 ml sample in each bottle. The sampling continues from 6:00 am until 8:00 am, resumes at 11:00 am, and continue until 1:30 pm. It pauses until 4:00 pm, continuing until 6:00 pm. When sampling stops, less than 24 samples may have been taken. Note: See *Sampling Stop/Resume,* on page 49.

Step No.	Display	Procedure
1	... STANDBY ... 10:34:50 19-JUN-91	Press ENTER/PROGRAM to access the interactive state.
2	[PROGRAM, CONFIGURE] SAMPLER	Access the program sequence by selecting "PROGRAM."
3	[TIME, FLOW, STORM] PACED SAMPLING	Select "TIME."
4	[UNIFORM, NONUNIFORM] TIME INTERVALS	Select "UNIFORM."
5	SAMPLE EVERY 0 HOURS, 10 MINUTES	Enter "0" to set the hours at zero. Press ENTER/PROGRAM to store the number "0" and move to the minutes entry.
6	SAMPLE EVERY 0 HOURS, 15 MINUTES	Enter "15" to set the minutes entry to 15.
7	BOTTLES PER SAMPLE EVENT (1 - 24)	Enter "1" to set the number of bottles per sample event to 1.
8	CHANGE BOTTLES BASED ON [TIME, SAMPLES/BTL]	Select "SAMPLES/BTL."
9	CHANGE BOTTLES EVERY 1 SAMPLES (1 - 8)	Enter "1" to set the number of samples per bottle to 1.
10	SAMPLE VOLUMES OF 500 ml (10 - 1000)	Enter "500" to set the sample volume at 500 ml.
11	ENTER START TIME? [YES, NO]	Select "YES."
12	TAKE FIRST SAMPLE AT 6:00 19-JUN	Enter the start time and date of the sampling program: 6:00 am tomorrow.
13	STOP or RESUME TIMES (0-24)	Enter "5." There are three stop times and two resume times.
14	STOP SAMPLING AT 1. 8:00 19-JUN	Enter the time and date of the first stop time: 8:00 am.

Step No.	Display	Procedure
15	RESUME SAMPLING AT 1. 11:00 19-JUN	Enter the time and date the program should resume: 11:00 am.
16	STOP SAMPLING AT 2. 16:30 19-JUN	
17	RESUME SAMPLING AT 2. 16:00 19-JUN	Enter the time and date the program should resume: 4:00 pm or 16:00 in military time.
18	STOP SAMPLING AT 3. 18:00 19-JUN	Enter the final stop time: 6:00 pm or 18:00 in military time.
19	PROGRAMMING SEQUENCE COMPLETE . . .	After this message is displayed briefly, the sampler will automatically return to the standby state.
20	. . . STANDBY . . . 10:37:23 19-JUN-91	Press the START SAMPLING key to run the program.
21	START SAMPLING BOTTLE 1 (1-24)	To start the sampling routine with the first bottle, accept the blinking "1" by pressing the ENTER/PROGRAM key. If you want to start the routine with another bottle, enter the starting bottle number here.
	Run State Displays	**Comment**
22	BOTTLE 1 AT 6:00 10:38:07	This display appears as the sampler counts down the time remaining to the start time. The first line reports the bottle which will receive the next sample volume. The second line reports the start time at the left and the current time on the right.
23	BOTTLE 1	When the start time arrives, the sampler will take the first sample. The sample event cycle begins with a pre-sample purge. During the purge, the display indicates the bottle number which will receive the sample volume.
	BOTTLE 1 PUMPING 500 ml	As soon as the pump runs forward to deliver the sample volume, the message on the second line appears. This message remains through the post-sample purge.
24	BOTTLE 2 AT 6:15 8:01:11	This display appears when the post-sample purge from the previous sample event is completed. It indicates the bottle number which is to receive the sample at the upcoming sample event. The second line displays the scheduled time for the next event on the left. The current time is displayed on the right.
25	↓ ↓	The cycle of displays is repeated for each bottle until the sampling routine is done.
26	DONE . . . 18 SAMPLES 18:10:35 21-JUN-91	When the routine is completed, this message appears. It reports the status of the routine ("DONE"), the total number of sample events, and the current time and date.

Example 17 Storm Water Run Off Sampling

The following example programs a 24 bottle sampler to allocate six bottles to the first bottle group. The remaining 18 bottles, allocated to the second bottle group, will be used for flow-weighted samples. The sampler will delay the first group 25 minutes after it is enabled. For the first bottle group, the sampler will take two samples with a 5 minute interval between each sample event. At the first sample event, bottles 1 through 3 will each receive 900 ml each (bottles-per-sample multiplexing). At the second timed event, bottles 4 through 6 will receive 900 ml each. The distribution scheme used in this program is illustrated in **Figure 17,** on page 19. The sampler will fill the second bottle group with flow-paced samples during the same time as the first bottle group. At each sample event, a single bottle in the second bottle group will receive a 400 ml sample. Each bottle will receive samples from two sample events (samples-per-bottle multiplexing).

Step No.	Display	Disp No.	Procedure
1	... STANDBY ... 10:34:50 12-JUN-92		Press ENTER/PROGRAM to access the interactive state.
2	[PROGRAM, CONFIGURE] SAMPLER	#1	Access the program sequence by selecting "PROGRAM."
3	[TIME, FLOW, STORM] PACED SAMPLING	#12	Select "STORM."
4	TIME MODE FIRST BOTTLE GROUP		After displaying this message briefly, the sampler will automatically advance to the next display.
5	[ ] MINUTE DELAY TO FIRST GROUP SAMPLE	#15	Enter "25" to delay the first group sample 25 minutes. (Acceptable range of values: 0 to 999.)
6	TAKE [ ] TIMED EVENTS (1 - 50)	#23	Enter "2" to take two timed samples.
7	SAMPLE INTERVALS OF MINUTES (1 - 999)	#24	Enter "5" to set the time interval between samples to five minutes.
8	BOTTLES PER SAMPLE EVENT (1-23)	#30	Enter the number of bottles per sample event: "3."
9	SAMPLES PER BOTTLE (1 - 2)	#31	Enter "1" to place one sample in each bottle.
10	SAMPLE VOLUMES OF [ ] ml (10 - 1000)	#50	Enter the sample volume of "900" ml.
11	18 BOTTLES, 18000 ml AVAILABLE		The sampler will display this message before automatically advancing to the next display.
12	[TIME, FLOW] SECOND BOTTLE GROUP	#14	Select "FLOW."
13	[DURING, AFTER] TIME MODE	#16	Select "DURING" to fill the second bottle group at the same time as the first bottle group.

Step No.	Display	Disp No.	Procedure
14	SAMPLE EVERY [illegible] PULSES (1-9999)	#22	Enter "5" as the flow pulse interval. The sampler will take a sample every fifth flow pulse.
15	MAX FLOW INTERVAL OF [illegible] HOURS 0 MINUTES	#110	This display requires two entries. Enter "2" hours and "0" to set the maximum amount of time between flow-paced sample events.
16	[illegible] BOTTLES PER SAMPLE EVENT (1-22)	#30	Enter the number of bottles filled at each sample event: "1."
17	[illegible] SAMPLES PER BOTTLE (1 - 50)	#31	Enter "2" to set the number of samples delivered to each bottle.
18	SAMPLE VOLUMES OF [illegible] ml (10 - 990)	#50	Enter the sample volume of "400" ml.
19	ENTER START TIME: [[illegible], NO]	#90	Select "YES" to enter a start time in the following step.
20	STORM ENABLED AFTER 06:00 20-[illegible]	#93	This display requires two entries. Enter a time of "06:00" and a date of "20-06" to start the STORM routine at 6:00 am on June 20.
21	PROGRAMMING SEQUENCE COMPLETE . . .		After displaying this message, the sampler will automatically return to the standby state
	Run State Displays		**Comment**
	START STORM PROGRAM AT 6:00 5:33:07		This display appears when you press START SAMPLING.
22	BOTTLE 1 AT 6:25 5:38:07		The displays shown in step 22 alternate as the sampler's clock approaches the start time. The first line reports the bottles which will receive the first sample volumes for each bottle group.
	1 of 2, BOTTLE 3 AFTER 5 PULSES		
23	BOTTLE 1 PUMPING 900 ml		As soon as the pump runs forward to deliver the sample volume, the message on the second line appears. This message remains through the post-sample purge.
24	BOTTLE 2 AT 6:30 6:26:11		The sampler will continue to alternate displays until the routine terminates
	1 of 2, BOTTLE 3 AFTER 5 PULSES		
25	↓ ↓		The cycle of displays is repeated for each bottle until the sampling routine is done.
26	DONE . . . 42 SAMPLES 18:10:35 25-JUN-92		When the routine is completed, this message appears. It reports the status of the routine ("DONE"), the total number of sample events, and the current time and date.

STANDBY STATE

A sampler in the standby state is waiting for your instructions. From standby, you can start or resume a sampling program, access the program or configure sequences, take manual samples, and use the display status key to review program settings or the results of a sampling routine.

A sampler in standby uses a number of displays to communicate its status. Some of these displays are associated with the function of a specific key; other displays are used to notify you that a sampling program is done, halted, or has encountered a problem. The standby state displays and valid keys are discussed below. (Most standby displays do not have numbers.)

Standby Display

When you first turn the sampler on, the sampler "wakes up" in the standby state. The standby display, illustration *a*, simply informs you that the sampler is in standby and reports the current time and date.

... STANDBY ...
10:37:23 19-JUN-91

a

At this point, the following keys are operable: ON/OFF, PUMP REVERSE, PUMP FORWARD, enter/program, start sampling, manual sample, NEXT BOTTLE, and display status.

Program Halted

A sampling program can be halted with either the STOP or exit program key; if this occurs, the sampler will display the halt message shown in illustration *b*. If you halt the program to take a manual sample or to change a setting in the program or configure sequence, the sampler will return to standby. If this is the case, you will not be able to use the resume sampling key.

... PROGRAM HALTED ...
10:37:33 19-JUN-91

b

Each operable key is listed and discussed below.

On/Off- When in the standby state, this key simply shuts the sampler off.

Pump Forward and Pump Reverse - The PUMP FORWARD and PUMP REVERSE keys run the pump forward or in reverse until you interrupt it with the STOP key. While the pump is running, the message illustrated in *c* or D is displayed, depending on the pumping direction.

PUMPING FORWARD ...

c

PUMPING REVERSE ...

d

When you press the STOP key, the sampler will display a message similar to the one illustrated in e. This message indicates the total number of pump counts that occurred while the pump was running. This information can be used to set the desired number of purge counts in *Purge Counts,* on page 52. Press any key, except STOP and ON/OFF, to return to the standby display.

311 COUNTS FORWARD

e

Manual Sample - You can take manual samples in standby by pressing the MANUAL SAMPLE key. After you press the MANUAL SAMPLE key, the sampler will deliver the programmed sample volume to the bottle currently under the distributor. A manual sample delivers the sample volume currently entered as a programmed setting, and includes the pre-sample and post-sample purges. It will also include any programmed rinses and retries. The sampling process can be stopped with the STOP key at any time. If you press the MANUAL SAMPLE key while a sampling program is in progress, the manual sample will be counted as one of the programmed samples.

While the sample is being delivered, the sampler displays a message similar to that illustrated in *f*. The second line will not appear until the pump begins to pump forward to deliver the sample. The display will revert to standby after the manual sample has been delivered.

... MANUAL SAMPLE ...
PUMPING 200 ml

f

Next Bottle - If you want to reposition the distributor, use the NEXT BOTTLE key. The sampler will advance the distributor to the next bottle position. (The sampler determines the bottle positions by referring to the Bottle Number configuration setting. See *Bottles and Sizes,* on page 42.) The sampler will display the distributor's location as illustrated in g. After a short time, the display will revert to standby. If the distributor is over the last bottle position when you press NEXT BOTTLE, it will move to Bottle 1.

NOW ON BOTTLE 2

g

Start Sampling - Once you have programmed and configured the sampler, use the start sampling key to run the sampling program. The first display you'll see after pressing the START SAMPLING key is illustrated in *h*. If you want to have the sampling program begin with a bottle other than bottle one, enter the first bottle number here. If "1" is acceptable, press the ENTER/PROGRAM key to place the sampler into the run state. If you do not press a key within 60 seconds, the sampler will automatically enter the run state and will begin the sampling routine with bottle 1.

START SAMPLING AT BOTTLE 1 (1 - 24)

h

There are three instances where the sampler will not be able to run the program immediately. These occur when the program has been started after: the programmed start time, the first switch time, one or more programmed stop times. The sampler responds to these situations as discussed in **Examples 18** through **20**.

Resume Sampling - To resume or restart the program, press the RESUME SAMPLING or START SAMPLING key. When you press the RESUME SAMPLING key, the program will resume at the point it was halted. The display must read "PROGRAM HALTED" for the RESUME SAMPLING key to be active. If any samples were missed during the time the program was halted, the sampler will inform you with the message illustrated in *i*. The sampler will initiate one sample event if one or more sample events were missed.

2 SAMPLES WILL BE SKIPPED

i

Example 18 Program Started Later than Programmed Start Time

Display	Display No.	Procedure
PAST START TIME . . .		This display informs you of the expired start time. The sampler will present this display for a short time, then advance to the next display.
1 SAMPLES WILL BE SKIPPED		This display reports the number of samples which will be skipped if you do not change the start time; it appears only if more than one sample event time has passed. (See *Source of Sample Event,* on page 93.)
CHANGE START TIME? [YES, NO]	142	Select "YES" if you want to change the start time. Select "NO" if missed samples are acceptable.
TAKE FIRST SAMPLE AT :30 19-JUN	93	This display appears when you select "YES" in display #142 and a sample event is to occur at the start time. Enter the new start time.
START FLOW COUNT AT :30 19-JUN	94	This display appears when you select "YES" in display #142 and no sample is to occur at the start time for a flow-paced sampling routine. Enter the new start time.

Example 19 Program Started Later than Programmed First Switch Time

Display	Display No.	Procedure
PAST SWITCH TIME . .		This display informs you of the expired switch time. The sampler presents this display for a short time, then advances to the next display.
CHANGE SWITCH TIME? [YES, NO]	143	Select "YES" to change the switch time. Select "NO" to continue the routine.
FIRST BOTTLE CHANGE AT :30 19-JUN	46	This display appears when you select "YES" in display #143 and the bottles per sample event is set at "1." Enter the new switch time.
FIRST SET CHANGE AT :30 19-JUN	47	This display appears when you select "YES" in display #143 and the bottles per sample event is set to a number greater than one. Enter the new switch time.

Example 20 Program Started Later than Programmed Stop Time

Display	Display No.	Procedure
PAST STOP TIME . . . PLEASE REPROGRAM		This display informs you of the expired stop time. The sampler presents this display for a short time, then reverts to standby.
. . . STANDBY . . . 10:22:34 21-JUN-91		You must access the program sequence to change the expired stop and resume times. Once you've made the changes, start the routine again with the START SAMPLING key.

Start Sampling - When you press the START SAMPLING key after a program has been halted, the sampler will give you the choice between resuming the program and starting the program by presenting the display illustrated in *j*.

[START, RESUME]?SAMPLING PROGRAM

j

Select "START" to start the program from the beginning. Select "RESUME" to resume the program at the point at which it halted. If you do not make a selection from this display within 60 seconds, the sampler will automatically select the currently blinking response. START will re-initialize the display status memory.

Additional Displays

There are three additional displays used in the run state. These displays are discussed below.

Done

The sampler will inform you it has completed a program by displaying the message illustrated in *k*. This message is displayed until you press any key, at which time the display will return to the standby message.

DONE . . . 24 SAMPLES 10:37:33 19-JUN-91

k

Problem Occurred

You will be informed that a problem was encountered during the sampling routine with the message illustrated in *l*. This display will alternate with the "DONE" display at approximately three second intervals until you press any key. The sampler tracks missed samples and logs the probable cause in memory. This information is available through the display status procedure discussed in *Display Status,* on page 91.

PROBLEM OCCURRED . . . PRESS DISPLAY STATUS

l

Display Status

You can access a summary of the current program settings and the results of the most recent sampling routine with the DISPLAY STATUS key. This key is valid in both the run and standby states. The summary of the program settings consists of a number of informational displays describing the settings. The results of the sampling program include information about each sample event and reports problems encountered during the program. This information remains in memory until you start another program.

You can retrieve this information with Isco's Field Printer or a laptop computer running Isco's SAMPLINK software. Both methods produce two reports which contain the sampler ID, current status, program settings, and sampling results.

If a sampling routine is in progress when you press the DISPLAY STATUS key, the sampling routine will be suspended. No samples will be taken until you exit Display Status.

If the pump count reaches the number entered for the Tubing Life Warning setting, the Pump Tubing Warning will be displayed. An illustration of the warning is shown below.

WARNING: REPLACE PUMP TUBING!

Display Status and Reviewing or Printing Program Information

The sampler tracks and reports the following items:

- program start time and date
- sample volume
- source of each sample event
- cause of any missed samples
- start time of each sample event,
- number of pump counts to liquid detection for each event
- time the routine was completed
- sampler ID
- current time and date
- program settings.

Each of these items is illustrated in **Example 21** on page 92.

When you press DISPLAY STATUS, the display shown below, follows the pump tubing warning. It allows you to review the program settings or sampling results.

[REVIEW, PRINT] PROGRAM INFORMATION	Display # 148

Select "REVIEW" to review the program settings and sampling results. The sampler will present the display shown below. Use this display to leave the display status procedure or to review the program settings or sampling results.

REVIEW PROGRAM [NO, SETTINGS, RESULTS]	Display # 150

Select "NO" to return to the previous operating state. If you entered display status from standby, the standby message will reappear. If you entered display status from the run state, the sampling routine will resume.

Select "SETTINGS" to review the program settings. Use the LEFT ARROW, RIGHT ARROW, and the enter/program keys to move through the sampling settings. When the RIGHT ARROW or the ENTER/PROGRAM key is pressed at the last settings display, the "REVIEW PROGRAM" display will reappear.

Select "RESULTS" to review the results of the sampling routine. The first display reports the time and date the sampling program started. Use the LEFT ARROW, RIGHT ARROW, and ENTER/PROGRAM keys to move through the results. If the routine was finished at the time you pressed the DISPLAY STATUS key, the last display will report the time and date the routine ended. Use the LEFT ARROW, RIGHT ARROW, and the ENTER/PROGRAM keys to move through the sampling results. When the RIGHT ARROW or the ENTER/PROGRAM key is pressed at the last results display, the "REVIEW PROGRAM" display will reappear.

Select "PRINT" from Display #148 to send the current status, program settings, or sampling results to the Isco Field Printer. For information on the reports produced by the Field Printer, refer to the *Field Printer Instruction Manual.*

Example 21 Display Status: Results of Sampling Program

Step No.	Display	Procedure
1	DONE . . . 24 SAMPLES 12:34:50 20-JUN-91	Press DISPLAY STATUS to view the results of the sampling program.
2	[REVIEW, PRINT] PROGRAM INFORMATION	Select "REVIEW."
3	REVIEW PROGRAM [NO, SETTINGS, RESULTS]	Select "RESULTS."
4	PROGRAM STARTED AT 5:30 19-JUN-91	This display reports the start time and date of the program. Press ENTER/PROGRAM to advance to the next display.
5	200 ml SAMPLES	200 ml SAMPLES? This display reports the nominal sample volume. Press ENTER/PROGRAM to advance to the next display.
6	SAMPLE: 1, BOTTLE: 1 SOURCE: START	This display reports the bottle number(s) for each sample event. It also reports the source of the event; in this case, the sample was taken at the start time. Press ENTER/PROGRAM to advance to the next display.
7	TIME: 5:30 19-JUN-91 COUNTS: 280	This display reports the initiation time of the sample and the number of pump counts to liquid detection in the sample delivery cycle. Variations in the pump count indicate changes in the sampling conditions – head changes, example. Press ENTER/PROGRAM to advance to the next display.
8	↓ ↓	Press ENTER/PROGRAM to continue to review the information for the remaining sample events.
9	PROGRAM FINISHED AT 12:00 20-JUN-91	Press ENTER/PROGRAM to return to the "REVIEW PROGRAM" display.
10	REVIEW PROGRAM [NO,SETTINGS, RESULTS]	Select "NO" to return to standby.
11	. . . STANDBY . . . 15:39:50 19-JUN-91	

When you select "PRINT," Display #149 appears. Use this display to select the settings or results report. (The sampler will interrupt the reports to take a sample, if necessary.) Select "NO" to return to standby.

PRINT PROGRAM [NO, SETTINGS, RESULTS]	Display # 149

The sampler will display one of two messages as it sends the data to the printer. The first message informs you that the transmission is in progress. The second message is a warning which informs you that the sampler is unable to detect the printer. If you see the warning message, check the cable connections between the printer and the sampler.

. . . PRINTING . . . PROGRAM INFORMATION

PRINT ABORTED NO PRINTER DETECTED!

Source of Sample Event

The display illustrated in step 5 of **Example 21** on page 92 shows the sample event number, the bottle(s) used, and the source of the sample event. Source refers to the programmed or configured setting that initiated the sample event. For example, the sampler will report "TIME" as a source if the sample was taken as one of the program's time-paced samples. Nine sources are tracked and reported:

Time - The sample event was one of the program's time-paced samples.

Flow - The sample event was one of the program's flow-paced samples.

Start - The sample event was initiated at the program's start time.

Resume - The sample event was initiated to compensate for a missed sample which should have occurred while the sampler was halted. If more than one sample event was missed, only one sample will be taken.

Power - The sample event was initiated to compensate for a missed sample which should have occurred while the sampler was without power. If more than one sample was missed, only one sample will be taken.

Enable - The sample event was initiated when the sampler became enabled by a device connected to pin F of the flow meter connector, generally a Liquid Level Actuator. This source is also reported when the sample was initiated at a programmed resume time. Two different configure option settings control this event: the Sample Upon Enable setting in the Enable Pin configure option and the Sample at Resume setting in the Sampling Stop/Resume configure option.

Manual - The sample event was initiated with the MANUAL SAMPLE key and was counted as one of the programmed sample events.

Time Switch - The sample event was initiated at the programmed switch time. This event is controlled by the Sample at Time Switch setting in the Flow Mode Sampling configure option. This option is available for flow-paced sampling only.

Disable - The sample event was initiated when the sampler became disabled by a device connected to pin F of the flow meter connector, generally a Liquid Level Actuator. This source is also reported when the sample was taken at a programmed stop time. Two different configure option settings control this event: the Sample Upon Disable setting in the Enable Pin configure option and the Sample at Stop setting in the Sampling Stop/Resume configure option.

Error Messages and Missed Samples

The probable cause of any missed sample is reported after the sample number/source display. A missed sample display is illustrated below.

SAMPLE MISSED: NO LIQUID DETECTED!

Eleven causes are tracked and reported:

Pump "STOP" Key Hit! - The sampler was halted with the STOP key during the sample event.

Pump Jammed! - The sampler was unable to take the sample because the pump jammed.

Started Too Late! - The sampling routine was started after the programmed start time for the first sample. This message is reported for all samples skipped because of an expired start time.

Program Halted! - The sampling routine was interrupted by the STOP or exit PROGRAM KEY when the sample event was to occur.

Power Lost! - The sampler was unable to take the sample because the sampler's power source was disconnected.

Sampler Inhibited! - The sampler was prevented from taking the sample by an inhibit signal sent to the sampler by the Liquid Level Actuator, or other inhibiting device.

Distributor Jammed! - The sampler was unable to take the sample because the distributor jammed.

Probable Overflow! - Overflow is determined by comparing the bottle volume to the product of the sample volume and the number of samples. If the product exceeds the bottle volume, the sampler will not pump a sample for that sample event and will record the "Probable Overflow!" message.

No More Liquid! - The sampler was unable to deliver a full sample volume because the sampler pumped all liquid from the flow stream.

No Liquid Detected! - The sampler was unable to take the sample because no liquid was detected.

Sampler Shut "OFF"! - The sampler was unable to take the sample because it was halted with the ON/OFF key during the sample event.

RUN STATE

A sampler in the run state is executing the sampler's instructions according to the settings you've entered in the program and configure sequences.

To start a sampling program and place the sampler into the run state, press the START SAMPLING key. While running the sampling program, the sampler will present a number of displays which allow you to monitor the sampler's progress. The displays are listed with a brief explanation in **Tables 9** through **11.**

If a problem is encountered while running a sampling routine which has resulted in missed samples, an asterisk will appear in the lower right corner of the display, as illustrated below.

BOTTLE 11
AT 6:00 5:42:33 *

There is one instance where the refrigerated sampler will enter the run state after the START SAMPLING key is pressed, but will not begin the sampling program. If the sampler is interfaced with a flow meter, a Liquid Level Actuator, or other equipment capable of transmitting an inhibit signal, the sampler will not begin the program until the inhibit signal is suspended. The sampler will use the following display to inform you of this conditions.

SAMPLER INHIBITED!
10:32 19-JUN

Sampler Inhibited Display

Table 9 Run State Displays: Time-paced Sampling

	Display	Explanation
1	BOTTLE 5 AT 5:44 5:42:33	Indicates the bottle number of the next sequential sample. The second line reports the scheduled sample event time followed by the current time.
2	BOTTLES 1- 4 AT 6:00 5:55:33	Indicates the scheduled time and receiving bottle numbers for an upcoming sample event. The sampling program requires four bottles per sample event.
3	1 OF 4, BOTTLE 1 AT 6:00 5:55:33	Indicates the number of the upcoming sample, the total number of samples each bottle is to receive, and the current bottle number. The program requires four samples per bottle.
4	1 OF 4, BTLS 1- 4 AT 6:00 5:55:33	Indicates the sample and bottle numbers of the next sample event. The bottle set consists of four bottles. The sampling program requires that four samples be placed in each bottle of the set.
5	SAMPLE 3, BOTTLE 1 AT 6:00 5:42:33	Indicates the sample and bottle number of the next sample event The current time is shown in the lower right corner. The sampling program requires one bottle per sample event and that the bottles be switched on a time basis. This display alternates at three second intervals with the display illustrated in item 6.
6	NEXT BOTTLE CHANGE AT 10:00 19-JUN	Indicates the time of the next bottle switch.
7	SAMPLE 2, BTLS 1 - 4 AT 6:00 5:42:33	Indicates the sample and bottle numbers of the next sample event. The current time is shown in the lower right corner. The sampling program requires four bottles per sample event and that the bottle sets be switched on a time basis. This display alternates at three second intervals with the display illustrated in item 8.
8	NEXT SET CHANGE AT 8:00 19-JUN	Indicates the time of the next bottle set switch.
9	BOTTLE 1 PUMPING 200 ml	Indicates a sample in progress.

Table 10 Run State Displays: Flow-paced Sampling

	Display	Explanation
1	START AT 6:00 19-JUN 5:42:43 19-JUN	Indicates the programmed start time of a flow-paced sampling program when no sample is to be taken at the start time. The first line reports the programmed start time and date, the second line reports the current time and date.
2	BOTTLE 1 AT 6:00 5:42:33	Indicates the programmed start time of a flow-paced sampling program when a sample is to be taken at the start time. The current time is shown in the lower right corner. The sampling program requires one bottle per sample event.
3	BOTTLE 1 AFTER 5 PULSES	Indicates the bottle number of the next sequential sample. The second line reports the number of flow pulses remaining until the next sample event.
4	BOTTLES 5- 7 AFTER 25 PULSES	Indicates the bottles which will receive samples at the next sample event. The second line reports the pulses remaining until the next sample event. The sampling program requires three bottles per sample event.
5	1 OF 4, BOTTLE 1 AFTER 10 PULSES	Indicates the number of the upcoming sample, the total number of samples each bottle is to receive, and the current bottle number. This display indicates that four samples are to be deposited in each bottle.
6	1 OF 4, BTLS 1- 4 AFTER 1000 PULSES	Indicates the sample and bottle numbers of the next sample event. The bottle set consists of four bottles. The sampling program requires that four samples be placed in each bottle of the set.
7	SAMPLE 2, BOTTLE 1 AFTER 10 PULSES	Indicates the sample and bottle number of the next sample event. The sampling program requires one bottle per sample event and that the bottles are switched on a time basis. Alternates at three second intervals with the display illustrated in item 8.
8	NEXT BOTTLE CHANGE AT 10:00 19-JUN	Indicates the time of the next bottle switch.
9	SAMPLE 2, BTLS 1 - 4 AFTER 10 PULSES	Indicates the sample and bottle numbers of the next sample. The sampling program requires four bottles per sample event and that the bottle sets be switched on a time basis. This display alternates at three second intervals with the display illustrated in item 10.
10	NEXT SET CHANGE AT 10:00 19-JUN	Indicates the time of the next bottle set switch.
11	BOTTLE 1 PUMPING 200 ml	Indicates a sample in progress.

Table 11 Run State Displays: Composite Sampling

	Display	Explanation
1	SAMPLE 1 OF 12 AT 6:00 5:43:33	Indicates the sample number of the next sample and the total number of samples for time-paced routines. The current time is shown in the lower right corner.
2	SAMPLE 1 OF 12 AFTER 10 PULSES	Indicates the sample number of the next sample and the total number of samples for flow-paced routines.
3	BOTTLE 1 PUMPING 200 ml	Indicates a sample in progress.

Chapter 4 Routine Maintenance

Routine Maintenance

This chapter discusses routine maintenance necessary to keep the refrigerator in top operating condition. Included are sections on the weather and corrosion resistance of the refrigerator and cleaning the refrigerator.

The 3700FR/3720, although ruggedly built to withstand difficult field operating conditions, will maintain maximum reliability when these simple maintenance procedures are followed. As with any piece of field-operated equipment, a certain amount of preventive maintenance is necessary to keep it functioning properly.

Weather and Corrosion Resistance

The 3700FR/3720 is designed to be operated in relatively hostile environments. It may be directly exposed to wet environments and still function properly. The refrigerator's mechanical and electrical components, and the sampler controller are protected from rain, accidental spray, etc.

The refrigerator's base, exterior, and controller cover are constructed of a fiberglass reinforced polyester with an ultraviolet-resistant gel coat. The exterior metal parts are either anodized or Iridited™ aluminum, or stainless steel. The control box is made of Noryl (polyphenylene oxide) and is rated at NEMA 4X, 6. The interior of the refrigerator is made of a food grade ABS plastic which will not support bacterial growth or leach plasticizers into the sample. The evaporator is a roll-bonded aluminum plate with a special refrigeration powder coated epoxy finish. The power supply and solid state thermostat are enclosed in a sealed aluminum enclosure inside the refrigerator's base.

Cleaning

The following sections present information on cleaning the sample bottles and pump tubing. Information is also included for cleaning the refrigerator's interior, exterior, condenser coil, and bottle locating base.

Tubing

The suction line and pump tubing can be cleaned by placing the end of the suction line in a cleaning solution and pumping this solution through the tubing system using the PUMP FORWARD and PUMP REVERSE keys. Follow with a clean water rinse.

Sample Bottles

The sample bottles have a wide mouth to facilitate cleaning and can be washed with a brush and soapy water or washed in a dishwasher. The glass bottles can be autoclaved; however, the plastic lids and bottles should **not** be autoclaved.

Cleaning Protocols for Priority Pollutants

The following sections are excerpted from U.S. Environmental Protection Agency Publications EPA-600/4-77-039 ("Sampling of Water and Wastewater" by Dr. Phillip E. Shelley) to provide an example of sampler cleaning procedures for priority pollutants.

Proper Cleaning

Proper cleaning of all equipment used in the sampling of water and wastewater is essential to ensuring valid results from laboratory analysis. Cleaning protocols should be developed for all sampling equipment early in the design of the wastewater characterization program. Here also, the laboratory analyst should be consulted, both to ensure that the procedures and techniques are adequate, as well as to avoid including practices that are not warranted in view of the analysis to be performed.

Cleaning Examples

As an example, Lair (1974) has set down the standard operating procedures for the cleaning of sample bottles and field procedures equipment used by USEPA Region IV Surveillance and Analysis field personnel engaged in NPDES compliance monitoring. They are reproduced as follows for a typical automatic sampler and related sampling equipment.

Isco Glass Sample Bottles:

1. One spectro-grade acetone rinse.
2. Dishwasher cycle (wash and tap water rinse, no detergent).
3. Acid wash with at least 20 percent hydrochloric acid.
4. Dishwasher cycle, tap and distilled water rinse cycles, no detergent.
5. Replace in covered Isco bases.

Suction Line (¼ or ⅜ Vinyl):

1. Do not reuse sample tubing. No cleaning required. New sample tubing is to be used for each new sampling setup.
2. Use Teflon tubing where samples for organics are to be collected.

Isco Pump Tube:

1. Rinse by pumping hot tap water through tubing for at least 2 minutes.
2. Acid wash tubing by pumping at least a 20 percent solution of hydrochloric acid through tubing for at least 2 minutes.
3. Rinse by pumping hot tap water through tubing for at least 2 minutes.
4. Rinse by pumping distilled water through tubing for at least 2 minutes.

Teflon Tubing:

1. Rinse twice with spectro-grade acetone.
2. Rinse thoroughly with hot tap water using a brush if possible to remove particulate matter and surface film.
3. Rinse thoroughly three times with tap water.
4. Acid wash with at least 20 percent hydrochloric acid.
5. Rinse thoroughly three times with tap water.
6. Rinse thoroughly three times with distilled water.
7. Rinse thoroughly with petroleum ether and dry by pulling room air through tubing.
8. Dry overnight in warm oven (less than 150° F), if possible.
9. Cap ends with aluminum foil.

Cleaning the Refrigerator

The refrigerator's exterior may be periodically cleaned with soapy water using a sponge or non-metallic brush to keep it free from corrosive solutions, grease, oil, etc. The thermal-formed, high impact ABS refrigerator interior may also be cleaned with soapy water. Do not direct a hose spray toward the underside or into the front grille of the refrigerator.

After cleaning, wipe the refrigerator dry. To maintain the appearance of the refrigerator's exterior, apply an automotive or marine wax that is recommended for fiberglass treated with an ultraviolet gel coat.

Because the refrigerator uses a forced-air system for cooling the compressor and condenser coil; dust, lint, and other debris will be pulled into the unit and will eventually accumulate on the filter. If the filter is not cleaned periodically, damage due to overheated components may result.

Warning

Be sure to disconnect the refrigerator's power before performing any service activities.

In order to prevent damage due to overheated components, the filter should be cleaned every three months; more frequently under severe operating conditions. To clean,

1. Remove the thumbscrews holding on the refrigerator's grille.
2. Remove the grille and filter then steam clean or wash in hot soapy water. After washing, treat the filter with a standard filter coat.

The condenser coil and surrounding areas should be cleaned annually; more frequently under severe operating conditions. To clean,

1. Remove the screws that hold the back panel on to the refrigerator and remove the panel.
2. Vacuum the fan, compressor, and surrounding areas.
3. Check the fan for freedom of movement. Oiling the fan motor is not necessary because the motor bearings are sealed. If the fan motor does not rotate freely, it should be replaced.
4. Replace the back panel.
5. Remove the front grille and filter. Vacuum the condenser coil and surrounding areas.
6. Replace the filter and grille.

Cleaning the Bottle Locating Base and Sample Bottles

The bottle locating base may be cleaned with soapy water and a sponge.The sample bottles have a wide mouth to facilitate cleaning. The 2.5-gallon glass bottle may be washed with a brush and soapy water then washed in a dishwasher or autoclaved. The 2.5, 4, and 5.5-gallon polyethylene bottles may be washed with a brush and soapy water or washed in a dishwasher, but not autoclaved.

Replacement of Pump Tubing

The pump tube serves two functions: it is a pump tube in the peristaltic pump and a distribution tube, routing the sample liquid from the pump outlet to the sample bottle. The pump tube consists of a single 39.5 inch (101 cm) piece of medical grade Silastic™ silicone rubber tubing. Medical grade tubing is used because of its superior mechanical properties and because it does not contain any organic materials.

Non-medical grade silicone rubber tubing can contain organic vulcanizing agents. During the vulcanizing process, these agents are converted into other compounds which can be leached into the sample. The medical grade silicone rubber tubing supplied by Isco for use with the 3700FR Sampler will **not** contribute any organic material to the sample.

Inspection of Pump Tubing

The pump tubing is extremely durable. However, the constant mechanical strain placed on the tubing by the peristaltic action of the pump will eventually cause the tubing to fatigue and fail. Inspect the pump tubing periodically for wear inside the pump by removing the cover. Check the tubing for cracks where the pump roller compresses the tubing. Replace it with a new pump tube, if necessary.

The inspections should be frequent when the liquid being sampled contains a high percentage of suspended solids. If the liquid is relatively free of solids, the inspections can be less frequent. The Tubing Life configure option reports the number of pump counts elapsed during the life of the tube.

The amount of tubing (13.5 inches) used in the pump is less than half the total length of the pump tube (39.5 inches). In some cases, when the tube has not been damaged to the point of leaking, the tube can be used twice by simply turning it around.

Note: The black bands used to assist you in correctly positioning the tubing in the pump and detector are placed on one end only. If you turn the tubing around, you will not be able to use the bands for reference.

Removing the Pump Tubing

To remove the tubing:

1. Disconnect power from the unit.

WARNING

Be sure power is disconnected from the unit before exchanging the pump tubing. The pump is extremely powerful. If the sampler activates the pump while you are manipulating the tubing, serious injury can result.

2. Detach the outer cases of the liquid detector and pump by loosening the captivated thumbscrews shown in **Figure 31**. This will expose the pump tubing as shown in **Figure 32**.
3. Pull the tubing away from the detector. Extract the tubing from the pump. The pump rollers can be rotated manually to facilitate the removal of the tubing. After the tubing is removed, clean the interior of the pump case thoroughly.
4. Remove the suction line, if attached, and pull the pump tubing from the pump tube port.

Figure 31 Liquid Detector and Pump Case

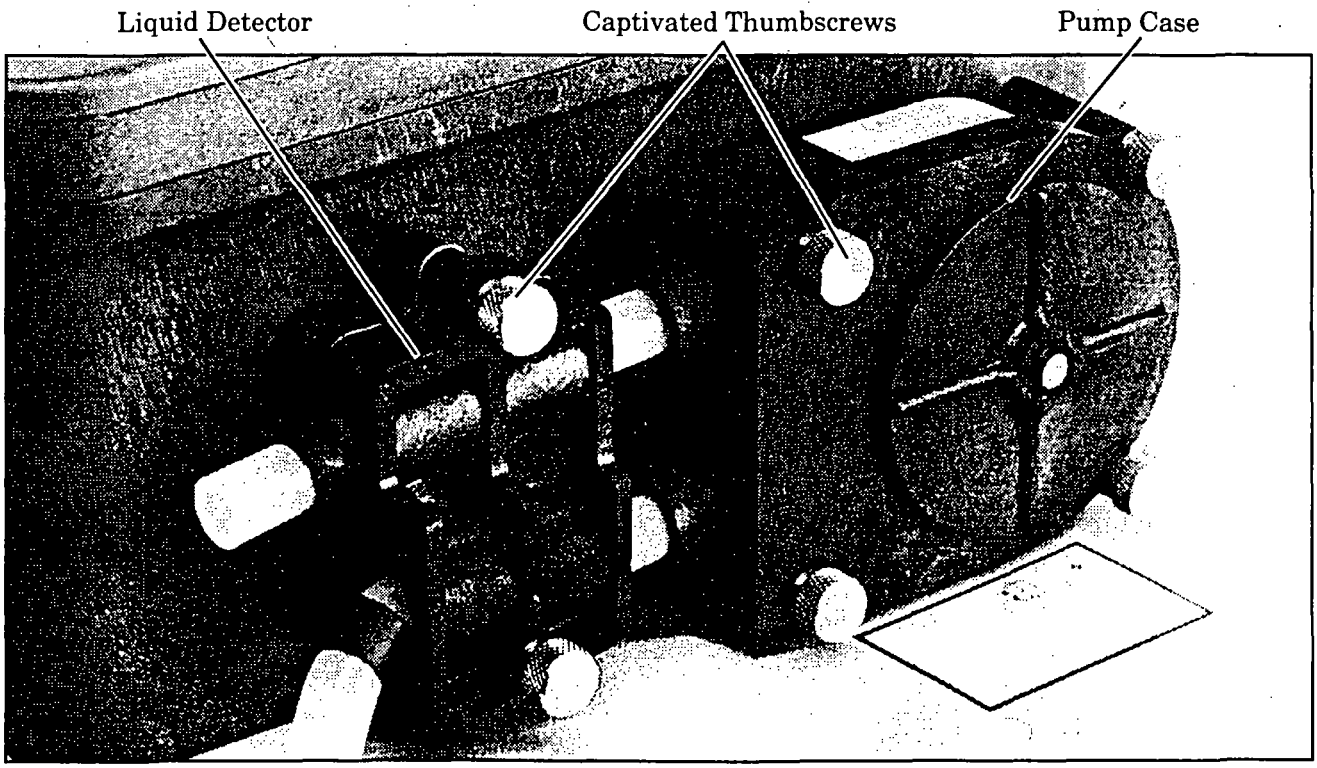

Installing a New Pump Tube

The steps below outline the procedure needed to install a new pump tube.

1. The pump tube is marked with two black bands. These bands are used to correctly locate the tubing in the detector and pump. Correct placement is critical to prolong the life of the pump tube and to assure efficient operation and accurate sample volumes.

   Facing the liquid detector, place the inner edge of the end band against the upper left inlet of the liquid detector. Place the inner band at the lower outlet of the liquid detector. **Figure 32** shows the correct placement of the tubing at the liquid detector.
2. Slip the pump tubing under the rollers so that the pump tubing does not interfere with the installation of the outer pump lid.
3. Replace the outer pump lid and tighten the four thumbscrews.
4. Re-check the position of the marker bands and adjust the tubing if the position of the bands indicate the tubing has slipped.
5. Replace the outer case of the liquid detector and tighten the two thumbscrews.

   The thumbscrews must be tightened securely for the liquid detector to operate correctly.
6. Feed the free end of the tube down through the pump tube port.
7. Re-install the suction line, as described in *Attaching the Suction Line* on page 8.
8. Reset the Pump Tube count to zero. Refer to the discussion of the Tubing Life configure option in **Chapter 3,** on page 15.

Figure 32 Interior of Liquid Detector and Pump Tube

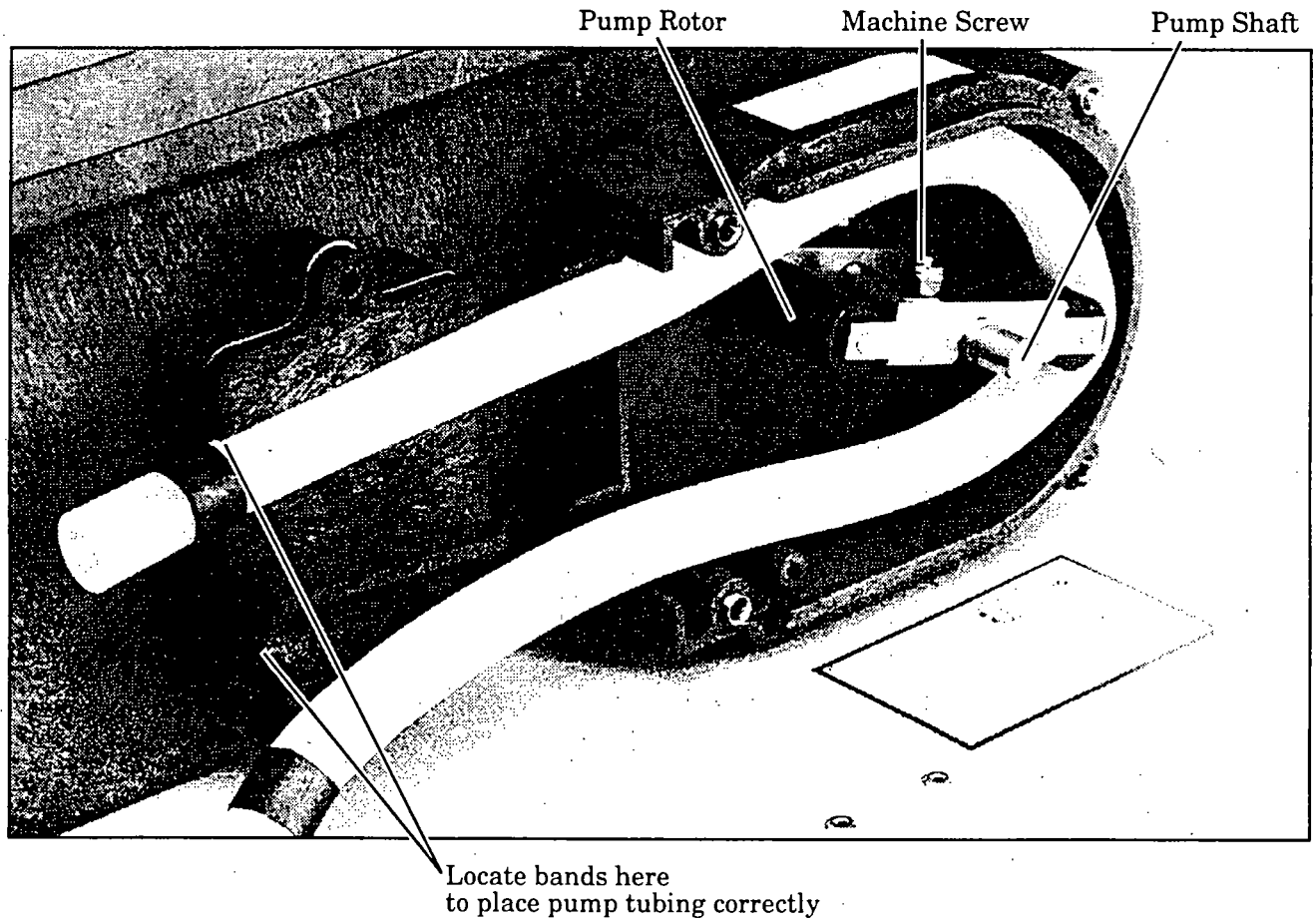

Replacement of Suction Line

It may be desirable to replace the suction line for one of several reasons. The suction line may be worn, cut, contaminated, or otherwise damaged; it should be periodically inspected for damage. In critical sampling, it may be necessary to replace the suction line between sampling programs to avoid cross contamination. When sampling site conditions change, it may be necessary to replace the suction line with a different diameter or type of line (vinyl or Teflon). The vinyl suction line contains a very low PPM (parts per million) level of phenols. If this affects your samples, use the Teflon line.

Cleaning Suction Line

The suction line and the remainder of the pump tube system should be cleaned occasionally as described in *Tubing* on page 98.

Replacement Vinyl Line

Replacement vinyl suction lines are available from Isco in two forms. First, a complete suction line, with weighted strainer and tube coupling, is available in 10 ft and 25 ft lengths for each of the 1/4-inch and 3/8-inch ID (Inside Diameter) vinyl suction lines. Second, bulk suction line in the 1/4-inch ID and 3/8-inch ID vinyl tube is available in 100- and 500-foot rolls see *Appendix A Accessories List,* on page 136.

Replacement Teflon Line

The 3/8-inch ID Teflon suction line is available from Isco in line lengths of 10 and 25 feet.

1/4 and 3/8 Inch ID Vinyl Suction Line

The following sections discuss the replacement of the complete suction line-strainer assemblies, the sizing of the suction line, and the assembly and installation of the bulk tubing. The suction line is removed from the pump tubing by detaching the tube coupling, as described in *Attaching the Suction Line* on page 8. If a complete new suction line-strainer assembly of the standard 10- or 25-foot length is used, it should be installed as described in *Placement of the Suction Line and Intake* on page 9.

Bulk Suction Line

If you are using bulk suction line to replace the old line, detach the old line from the tube coupling. Remove the strainer by loosening the hose clamp which secures the strainer to the line. Cut the new suction line to the desired length in one foot increments. The line must be between 3 and 99 feet long. To insure accurate sample volumes, it is important that the line is cut in 1-foot increments and that the line length is correctly entered in the Suction Line configure option. Install the strainer on the new suction line and tighten the hose clamp. The new suction line can now be installed in the pump as described in *Attaching the Suction Line* on page 8.

3/8 Inch ID Teflon Suction Line

The suction line is removed from the pump by loosening the clamp; which secures the line to the pump tube and pulling the suction line out of the pump tube. If a new suction line (either with or without the optional stainless steel strainer) is to be used, it is installed as described in *Attaching the Suction Line* on page 8. To install the optional stainless steel strainer, carefully slip the strainer's tapered connector inside the suction line and tighten the hose clamp supplied with the strainer.

Changing the Internal Desiccant

A humidity indicator, labeled "INTERNAL CASE HUMIDITY," is located in the lower left corner of the control panel. It indicates the amount of moisture present inside the control box. The paper indicator is blue in a dry state.

The control box is a completely sealed unit. (The control box does not need to be opened during normal operation.) The desiccant should absorb any moisture which may accumulate in the control box. Thus, the humidity indicator should remain blue under normal conditions. If moisture does accumulate, the numbered areas on the indicator will turn light pink or white, starting with the area numbered "20." This indicates that the relative humidity inside the control box exceeds 20%. As more moisture accumulates, the areas numbered "30" and "40" will turn light pink or white, indicating relative humidities of 30% and 40%.

If the 30% area of the humidity indicator turns light pink or white, the control unit should be opened, inspected for leaks, and the desiccant renewed. To do this, unscrew the 10 screws around the outer rim of the control box bezel, and carefully lift the cover off the control box and bezel. The control box contains electronic circuitry that may be damaged by static discharge. Open the control box only in a static-free environment.

Renewing the Desiccant

The desiccant is renewed by first removing the bags of desiccant from the control box, as shown in **Figure 33**. Then place a sheet of brown paper on a flat metal sheet. You can use a brown grocery bag and a typical cookie sheet. Place only the bags on the sheet. Do not stack the bags on top of each other or allow them to touch. Place in a vented, circulating forced air, convection oven in a well ventilated room. Allow two inches of air space between the top of the bags and the next metal tray above the bags. Keep the tray a minimum of 16 inches from the heating element. Heat the bags at a temperature of 240° to 250° F (116° to 121° C) for 12 to 16 hours. At the end of the time period, the bags should be immediately removed and placed in an airtight container for cooling. The desiccant will be recharged to approximately 80% to 90% of its previous capacity.

After repeated recharging, the desiccant bag may require replacement. Replacement bags of desiccant are available from Isco; refer to the *Replacement Parts List* in the back of this manual.

Some bags will have the temperature and time for recharging printed on the bag. If they differ, use the temperature and time printed on the bag.

To reassemble the controller, place the renewed desiccant in the tray as shown in **Figure 33**. If you have disconnected any wiring or the grounding strap between the control box and the panel, reconnect them. Before reinstalling the cover, coat the cover's gasket with a light film of silicone grease to seal the control box. Tighten the ten screws which hold the control box cover and bezel in place using an even cross-torquing pattern.

Figure 33 Control Box Internal Desiccant

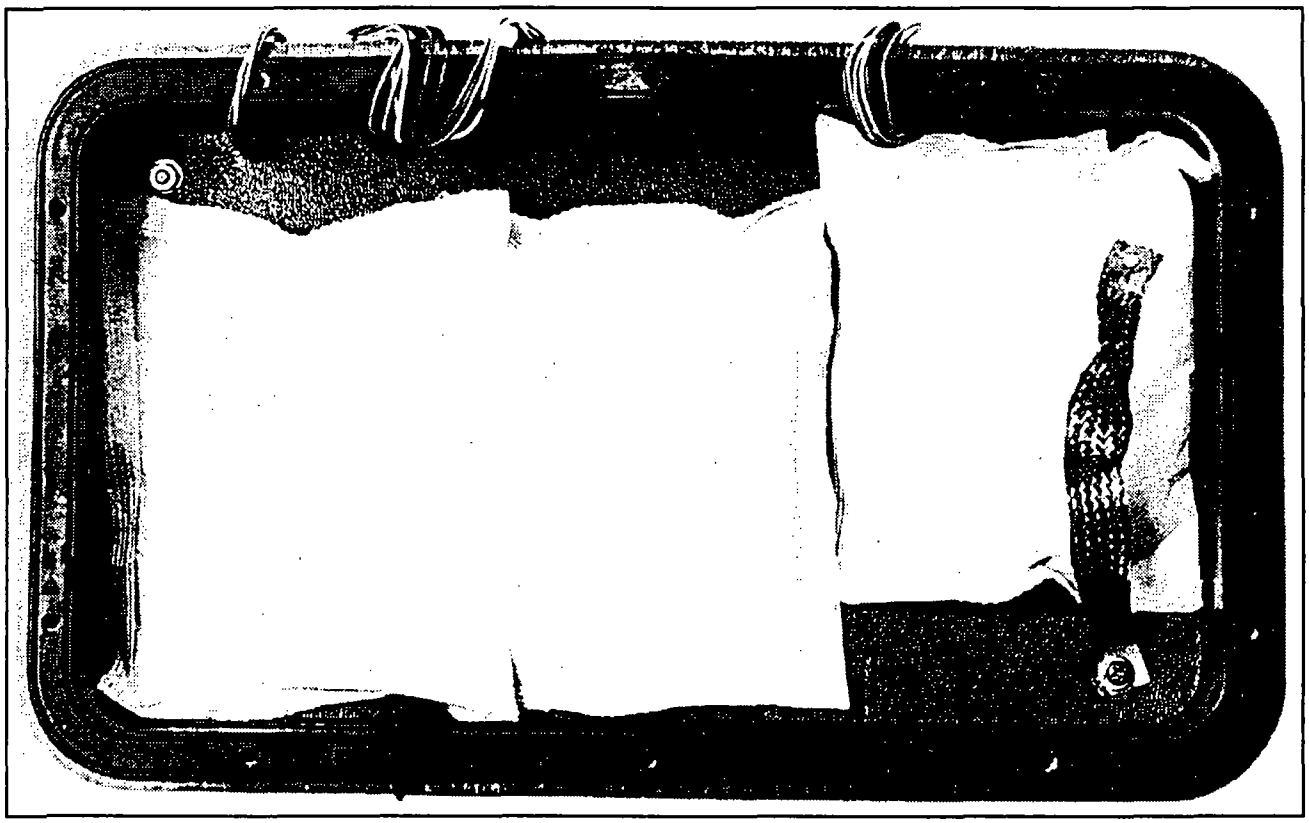

Chapter 5 Options and Interfacing Equipment

INTRODUCTION

This chapter presents information regarding the major options available with the 3700FR Sampler. The following sections present a general description of the options.

Connection to Isco and non-Isco flow meters is discussed in *Flow Meter Connections*.

Interface devices are discussed in *Interface Devices,* on page 105.

The Model 1640 Liquid Level Actuator is discussed in *Model 1640 Liquid Level Actuator,* on page 105.

FLOW METER CONNECTIONS

The 3700FR can collect samples on a flow proportional basis using flow inputs from an external flow meter or flow logger. The 3700FR Sampler requires a 5 to 15 VDC pulse of at least 25 millisecond duration to register a flow pulse. Flow meters are connected to the sampler by attaching a flow meter connect cable to the flow meter connector. **Figure 6,** on page 10 shows the connector.

NOTE

If a connect cable is not attached to the flow meter or printer connectors, be sure that the protective covers are tightly fastened in place

The sampler has an additional connector, labeled "PRINTER," used to connect the sampler to an Isco Field Printer or laptop computer. **Figure 34** shows the pin location diagram for the printer connector. (Note: Both the flow meter connector and the printer connector use the same 6-pin configuration.) The printer cable connector accepts both the connector from the Isco Field Printer and a cable from a laptop computer running the SAMPLINK software. **Table 12,** on page 105, shows the pinouts for the printer connector.

Isco Flow Meters and Flow Loggers

Connect cables to connect the 3700FR Sampler to an Isco flow meter are available. Refer to the *Appendix A Accessories List,* on page 136 for details. To make the connection, attach the appropriate cable connector to the flow meter or flow logger according to directions in the instrument's instruction manual, and attach the other connector to the 6-pin flow meter connector on the thermostat/wiring housing assembly, shown in **Figure 6,** on page 10.

Non-Isco Flow Meters

Certain non-Isco flow meters can be directly interfaced with the 3700FR Sampler. These are flow meters with an isolated contact closure type output of at least 25 millisecond duration. The frequency of the contact closures must be directly proportional to total flow.

The isolated contact closure from the flow meter should be connected to pins A and C of the 6-pin connector. **Table 13,** on page 105 shows the pinouts required for connecting a flow meter to the sampler. **Figure 34** shows a diagram of the pin locations on the 6-pin connector. Refer to the instruction manual of the flow meter being used for further details.

A connector and cable clamp to connect a non-Isco flow meter to the 3700FR Sampler are available from Isco. To wire the connector for contact closures, use pins A and C. To wire the connector for pulses, use pin C. When appropriately wired, attach the non-Isco connector to the flow meter connector on the rear of the sampler.

A connector pre-wired to a 22 ft. (6.7 m) cable terminating in two wires is also available. The black wire is connected to pin A, the white wire to pin C.

Figure 34 Pin Location Diagram for 6-pin Connector

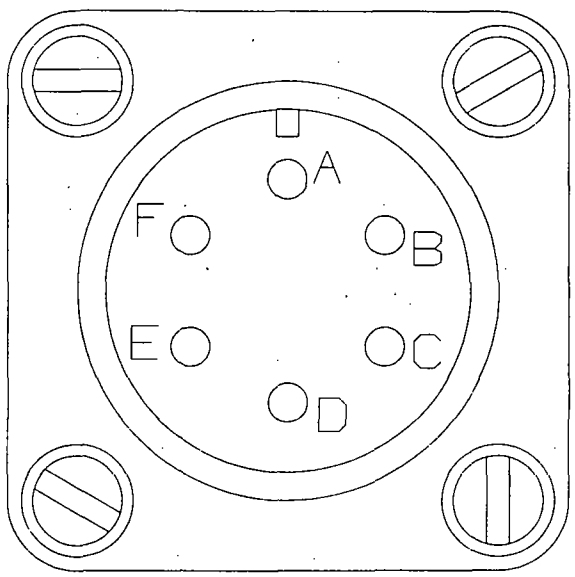

Table 12 6-Pin Printer Connector Wiring

Pin	Signal
A	+12 VDC
B	Common
C	Printer Sense
D	Transmit
E	Receive
F	NC

Table 13 6-Pin Flow Meter Connector Wiring

Pin	Signal
A	+12 VDC
B	Common
C	Flow Pulses In
D	Bottle Number Out
E	Event Mark Out
F	Inhibit In

INTERFACE DEVICES

The 3700FR Sampler can also be used with flow meters having other types of outputs, for example, a 4 to 20 mA output directly proportional to flow rate. However, these flow meters require a special interface device to convert their output signal into one compatible with the 3700FR Sampler. Two interfaces are available: the Type A Interface and the 4 - 20 mA Sampler Input Interface. Each interface connects to the flow meter connector. Consult the factory for assistance in interfacing the sampler with non-Isco flow meters.

Type A Interface - Converts flow pulse duration output from non-Isco flow meters to acceptable flow pulses. The Type A interface is shown in **Figure 35,** on page 106.

4-20 mA Sampler Input Interface -Converts 4 to 20 mA output signals from non-Isco flow meters to acceptable flow pulses. The 4-20 mA Sampler Input Interface is shown in **Figure 36,** on page 106.

MODEL 1640 LIQUID LEVEL ACTUATOR

The Liquid Level Actuator is a device used to begin a sampling routine when the liquid level of the sample flow stream reaches a predetermined height. The actuator is used to inhibit sampling according to flow levels; i.e., if the level of the flow stream falls below the actuator's probe, the actuator will inhibit sampling until the level again rises to contact the probe.

The actuator can be set to control the sampler in two modes.

Latch Mode - The sampler continues the sampling routine even though the liquid level has receded and liquid no longer contacts the sensor.

Toggle Mode - The sampler will halt the routine when the liquid ceases to contact the sensor.

To connect the actuator to the sampler, attach the actuator cable to the flow meter connector on the rear of the sampler. Refer to **Figure 34,** on page 104 for the location of the flow meter connector. Refer to the Liquid Level Actuator Instruction Manual for additional information.

The sampler must be configured to respond to the actuator. Refer to *Enable Pin,* on page 50.

Figure 35 Type A Interface

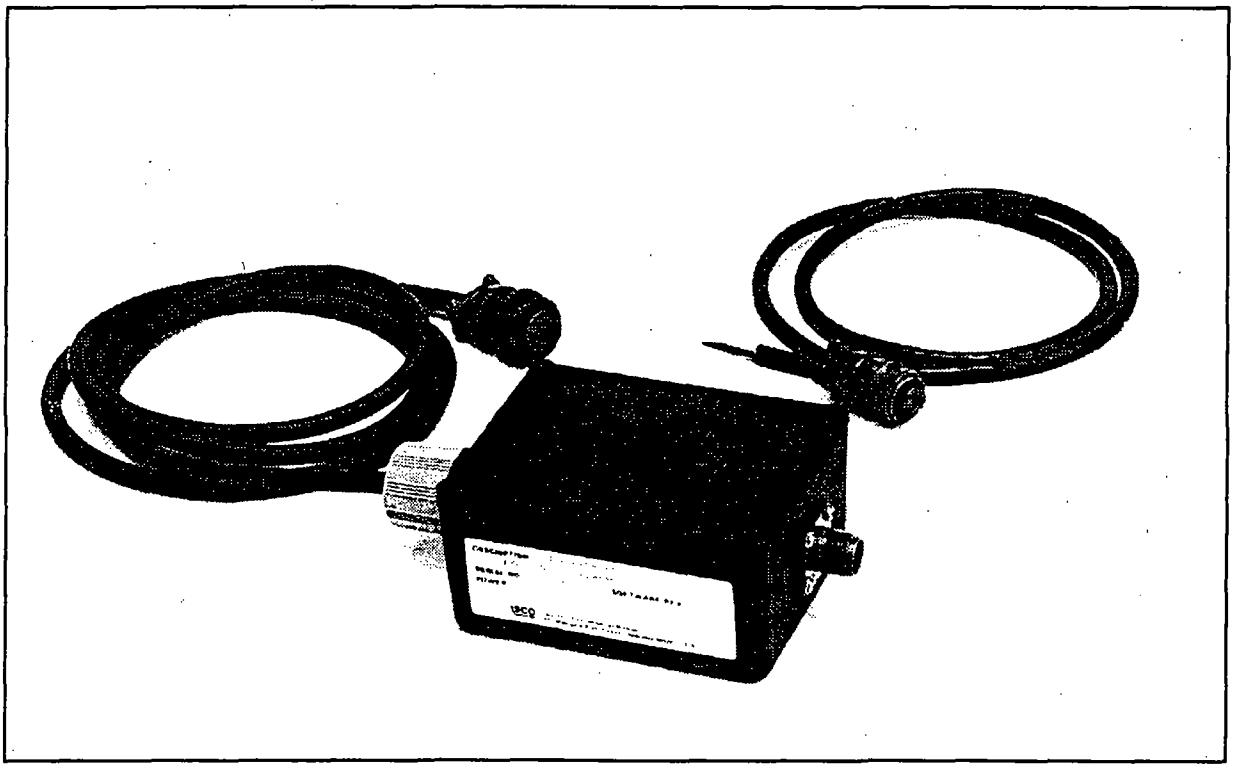

Figure 36 4-20 mA Sampler Input Interface

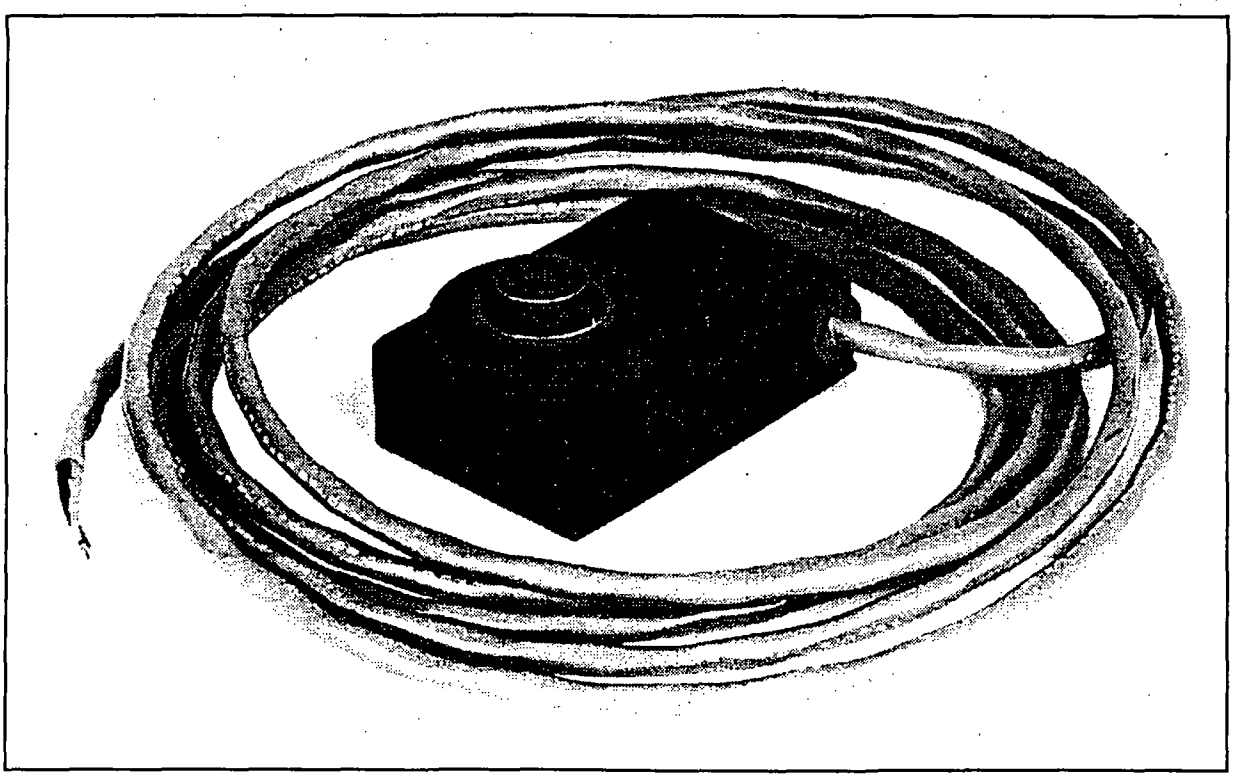

Chapter 6 Servicing

Servicing Information

This chapter presents refrigerator servicing information to assist you in correcting malfunctions which may occur. Included are sections providing information on the electrical and refrigeration systems, and on servicing the sampler's controller. An illustrated list of common replacement parts is also included.

The electrical system is discussed in *Electrical System,* on page 107.

The refrigeration system is discussed in *Refrigeration System,* on page 112.

A troubleshooting guide appears in *Troubleshooting Guide,* on page 112.

Servicing information for the electronic components in the control box is discussed in *Servicing the 3700 Controller,* on page 112.

An illustrated **Replacement Parts List** and a list of **Accessories** available for the 3700FR Sampler appear at the end of the chapter.

Electrical System

Access to the electrical and refrigeration components can be gained by removing the nine screws on the back of the refrigerator. Refer to **Figure 36**.

WARNING

Be sure to disconnect the refrigerator's power before performing any service activities.

Figure 36 Rear View of the 3700FR/3720

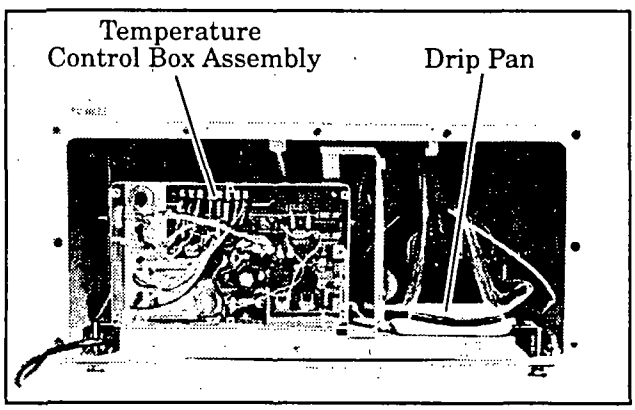

The temperature control box assembly which houses the thermostat logic circuit board, the transformer, and the solid state relay, is located on the left-hand side of the refrigerator base as shown in **Figure 36**. Access to these components can be gained by removing the six screws securing the lid of the temperature control box. The wiring connections label for the circuit board is located on the inside cover of the temperature control box and represented in **Figure 37**. Notice that the color of the bands on the wires determine where the connections come from or go to. All logic signal connections are made on an insulation displacement connector and 12 VDC and ground connections are made on quick disconnect tabs.

Figure 38 is a wiring diagram for the refrigerator. The diagram shows where all the connections are made within the refrigerator and the color of wires. It also points out the location of the various components within the refrigerator.

The refrigerator schematic showing the refrigerator's 12 VDC power supply and temperature control circuitry is shown in **Figure 39,** on page 111. The refrigerator circuit board is equipped with light emitting diode (LED) indicators showing the various functions of the thermostat circuitry and power supply. The placement of the indicators on the circuit board is shown on the wiring connections, **Figure 37**. Because the indicators are helpful in identifying malfunctions, they are described in detail in the circuit description below.

Refer to the refrigerator schematic in **Figure 39**. The barrier block on the circuit board contains all the 120 VAC (230 VAC) circuit connections. Low voltage AC comes from the transformer secondary through connectors P11 and P12 on the circuit board. The power is then rectified and passes through the switching regulators U7 and U8 to create the 12 VDC supply for the logic and sampler controller.

The signals from the ambient air temperature sensor, the internal refrigerator thermistor, the evaporator plate thermistor and the temperature control potentiometer come into the circuit board on connector P10.

The ambient air sensor samples the air temperature outside the refrigerator. It is located in the temperature assembly located on the right of the refrigerator grille. If the ambient temperature is cold, three heaters will be turned on by the circuitry.

Two of the heaters are located on the sides of the evaporator plate inside the refrigerator and one heater is located on the compressor.

The heaters prevent the sample from freezing when the outside air temperature falls below freezing. The compressor will cycle approximately the same amount of times at cold temperatures as at room temperatures.

The ambient air temperature signal comes from the sensor into the circuit board on pins 7 and 8 of connector P10. The signal is then sent to pin 2 of U1, which is an oscillator. Depending on the temperature, the voltage at pin 2 of U1 will vary. This varies the duty cycle of the oscillator, which in turn, varies the duty cycle of the heaters. This circuitry is linear; at 65°F the heaters will begin to come on and at -35°F the heaters will be on continuously. When the heaters are on, the internal heat LED indicator will be lit.

The internal temperature sensor is a thermistor that samples the internal air temperature of the refrigerator. It is mounted at the top of the refrigerator's interior. The internal temperature signal comes from the sensor, through the plug in the thermostat/wiring housing assembly, and into the board across pins 1 and 3 of P10. The setting on the temperature control knob comes from the potentiometer, through the plug in the thermostat/wiring housing assembly and into the board across pins 3 and 4 of connector P10. The signals are compared in comparator U2. If the interior of the refrigerator is warmer than the temperature control potentiometer setting, the internal temperature LED indicator will be lit. The temperature control potentiometer is located in the thermostat/wiring housing assembly.

The evaporator temperature sensor is mounted on the front of the evaporator plate. The signal from the sensor comes through the connector in the thermostat/wiring housing assembly and into the circuit board across pins 1 and 2 of connector P10. The signal is compared with a calibrated setting in comparator U2. The evaporator temperature LED indicator will be lit if the evaporator temperature is warm (and all the frost has been melted).

Connectors P4 and P5 are used for calibration purposes only. They are used at the factory to set up the correct resistances so the internal temperature and evaporator temperature indicators are "on" at the proper temperatures. It is not recommended that the user try adjusting these settings. The operation of the compressor and the compressor run LED indicator is determined by the temperature control potentiometer setting, the internal refrigerator temperature, and the evaporator temperature.

Figure 37 Circuit Board Wiring Connections

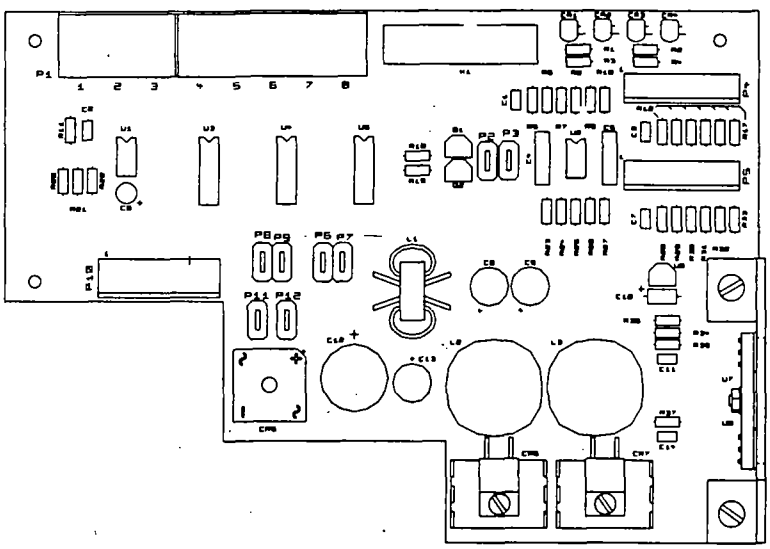

P1 Connections	Wire Color	From/To
1	Green/Yellow Band Green/Red Band	Line Cord Compressor
2	Brown/Yellow Band Brown/Black Band	Line Cord Relay Pin 1
3	Blue/Yellow Band White/Red Band	Line Cord Compressor
4	Black/Red Band Black/Black Band	Compressor Relay Pin 2
5	White/White Band Red/Red Band	Transformer Crank. Heater
6	Black/White Band	Transformer
7	White/Blue Band	Inter. Heater
8	Black/Blue Band Brown/Red Band	Inter. Heater Crank. Heater
Connector	**Wire Color**	**From/To**
P2	Blue/Black Band	Relay Pin 4
P3	Violet/Black Band	Relay Pin3
P6	White	Ground
P7	White/ Black Tracer	Ground
P8	Black	+12VDC
P9	Black/White Tracer	+12VDC
P11	Red/White Band	Transformer
P12	Red/White Band	Transformer
Indicator Lights		
CR1	Compressor Run	
CR2	Internal Heat On	
CR3	Internal Temperature	
CR4	Evaporator Temperature	

Below is the operation of a compressor cycle assuming that the compressor is already running.

As the compressor runs, the temperature of the evaporator will fall below 32°F (0°C) and the evaporator temperature indicator, located on the circuit board, will go out. The internal temperature and the compressor run indicators will both be lit. The compressor will continue running until the internal air temperature of the refrigerator reaches the temperature set on the temperature control knob. Once this temperature is reached the internal temperature indicator will go off, the compressor run indicator will go off, and the compressor will shut off. After the compressor shuts off, the refrigerator melts the frost that accumulated on the evaporator while the compressor was running. Once the evaporator temperature has warmed to the calibrated temperature (approximately 2°C) the evaporator temperature LED indicator will turn on.

When the refrigerator's internal temperature gets warmer than the temperature setting, the internal temperature indicator will light. When both the evaporator temperature and the internal temperature indicators are lit, a signal is sent through connectors P2 and P3 to the solid state relay. This activates the refrigerator's compressor and turns on the compressor run indicator. The compressor will continue to run until the internal temperature indicator goes out.

If it is suspected that there is a problem with the circuitry, remember that the compressor shuts off when the internal temperature sensor reaches the setting on the temperature control knob. But, to turn the compressor on, both the internal temperature sensor and the evaporator temperature sensor must be warm. The compressor/fan solid state relay may be replaced but do not attempt to replace any other components. Otherwise, the calibration of the circuitry will be disturbed. It is suggested that the entire board be replaced or the board be returned to the factory for repair.

Figure 38 3700FR/3720 Refrigerator Wiring Diagram

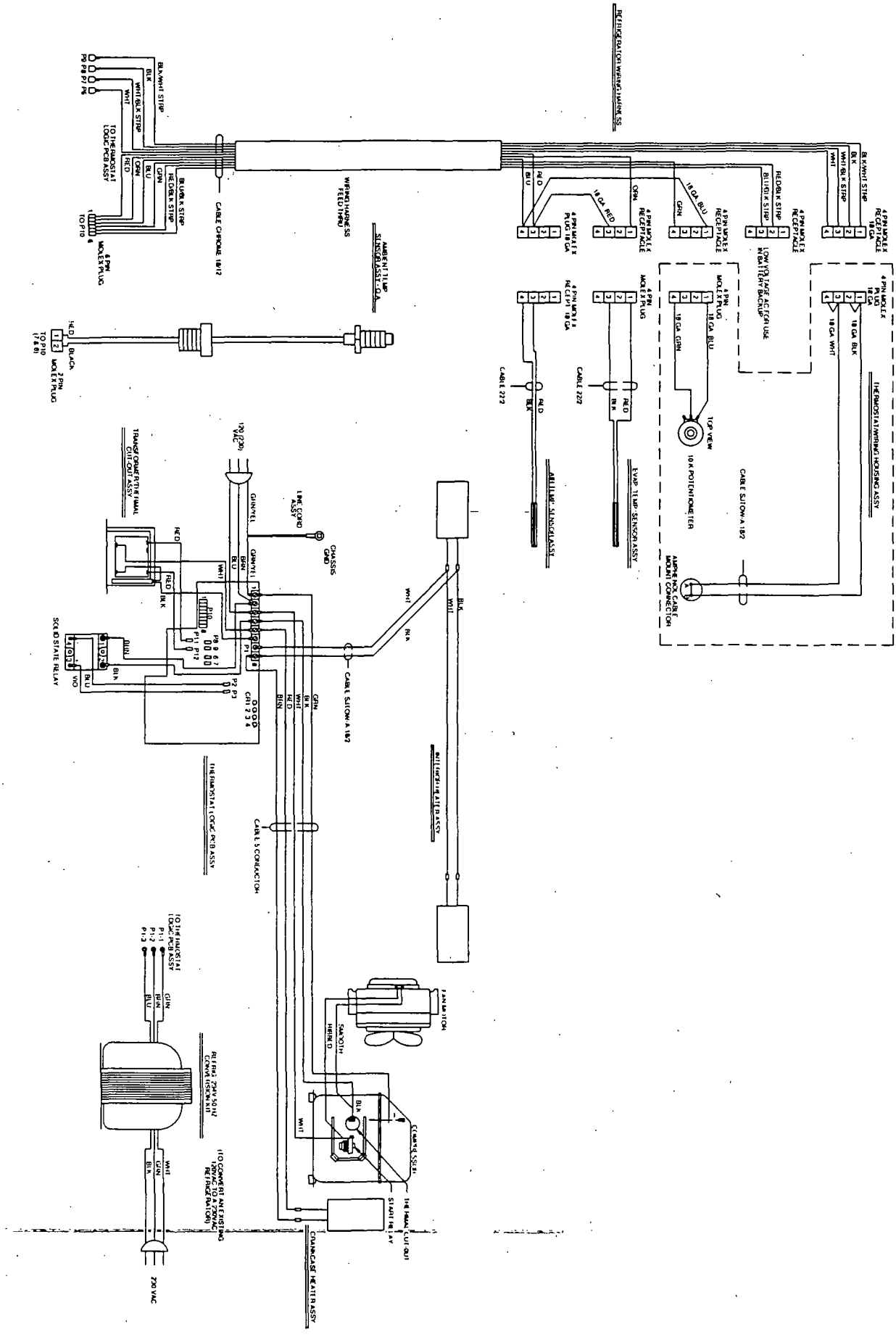

Figure 39 3700FR/3720 Schematic Diagram

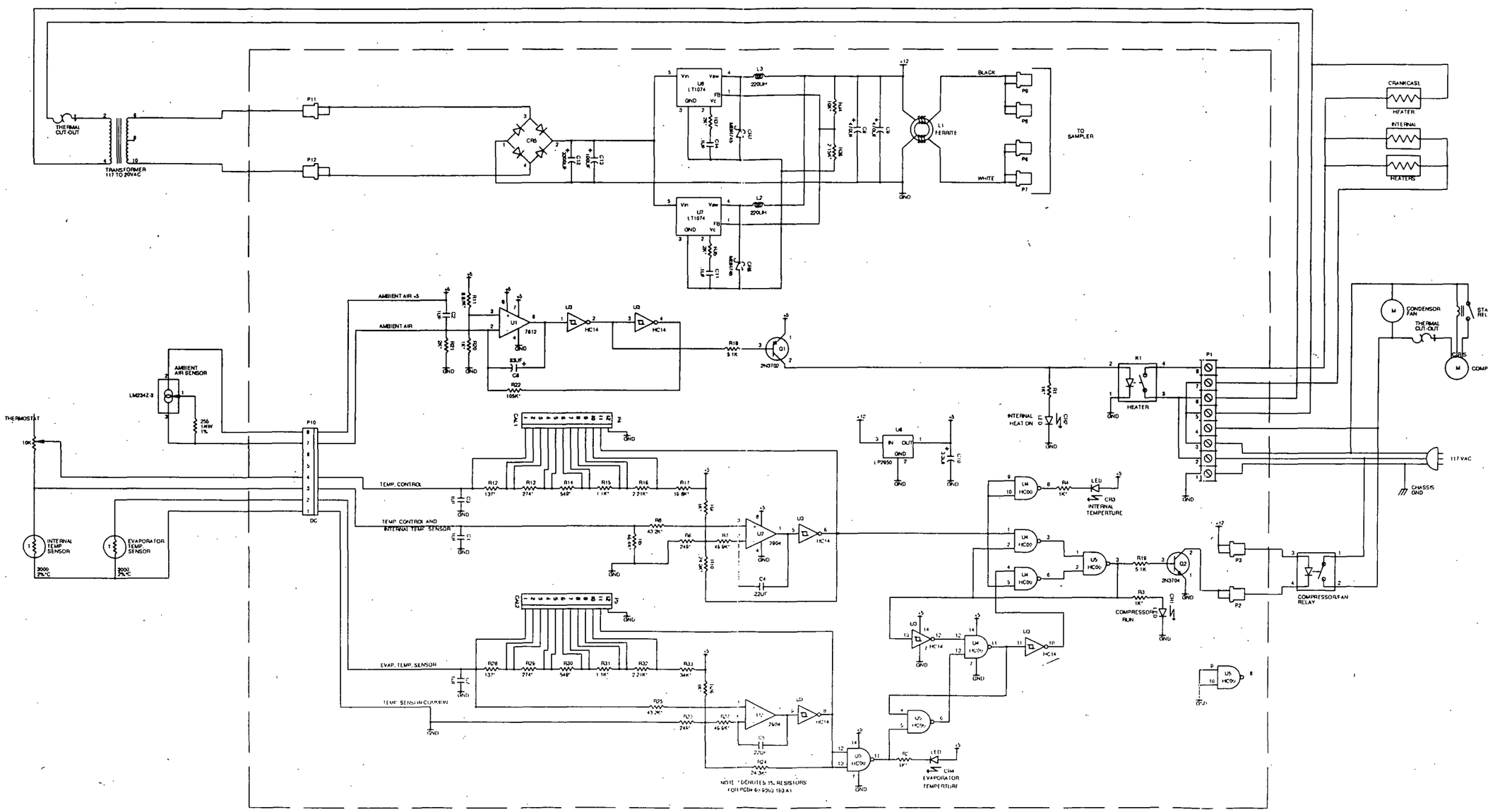

Refrigeration System

The refrigeration system is shown schematically in **Figure 40**. The refrigerant-charge capacity of the system varies according to the age and AC power requirements of the refrigerator. When recharging 120VAC, 60Hz and 230 VAC, 50Hz systems, refer to the following chart

Before Serial Number 11901-001	R-12, 8.5 oz
After Serial Number 11901-001	R134a, 7.52 oz

CAUTION

- **All refrigeration repair work must be performed by a qualified refrigeration technician.**
- **Always purge the system with nitrogen. NEVER USE AIR to purge the system.**
- **Always recover the refrigerant.**
- **When recharging, do not leave a line tap in the refrigeration system because of possible corrosion or leakage problems**

Equipped with external overtemperature and overload protection, the compressor may fail to start immediately when power is momentarily interrupted or when the thermostat setting is chang
The overload relay normally trips repeatedly unti
the refrigerant pressure equalizes. This does not indicate a malfunction.

Troubleshooting Guide

A troubleshooting flow chart appears in **Figure 41.** This is meant as a general guide and is not intended to cover problems in detail.

Servicing the 3700 Controller

The controller's solid-state electronic circuitry is highly reliable. If the unit fails to operate properly, check the power-cable or wiring harness connections. If problems persist, call the Isco Customer Service department for information on returning the sampler to the factory for repair. Contact:

Customer Service Department
Isco, Inc. - Environmental Division
531 Westgate Blvd.
Lincoln, NE 68528-1586
Phone: (800) 228-4373

Figure 40 Refrigeration Schematic Diagram

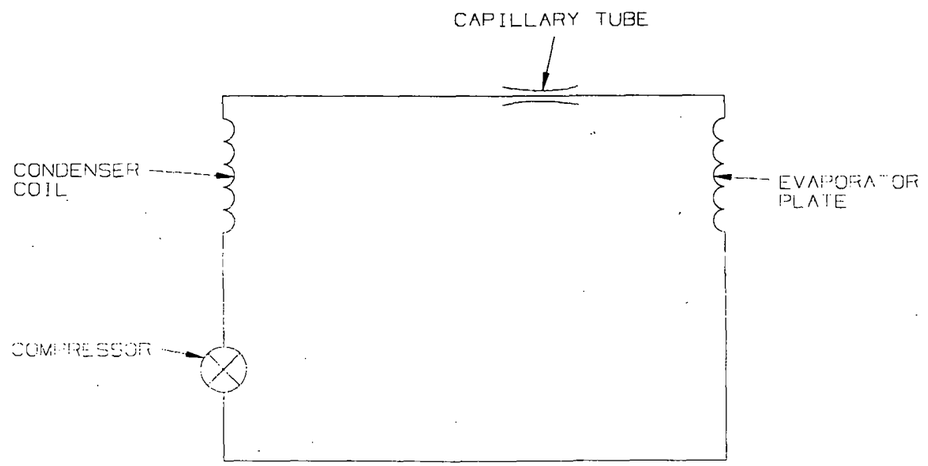

Figure 41 Compressor Trouble-Shooting Flowchart

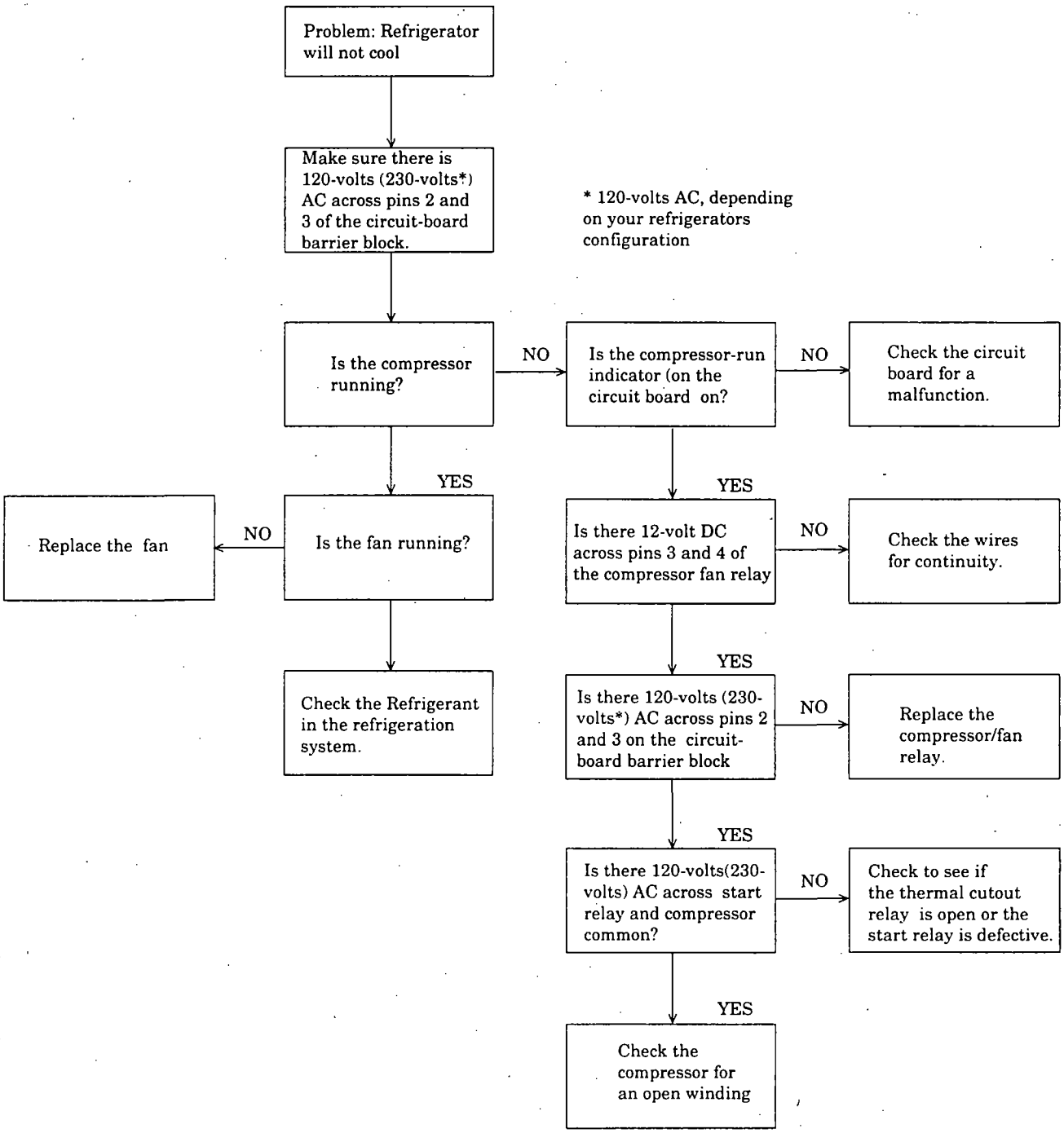

Installing a 3700 Series Controller on the 3720 Refrigerator

The 3720 Sampler Refrigerator is available to convert a 3700 Portable Sampler into a 3700FR Refrigerated Sampler. To do this, remove the control box from the portable sampler following the instructions in **Chapter 7** of the *3700 Portable Sampler Instruction Manual*. Because of the longer distance between the pump discharge and the sample bottle in the refrigerator, the standard 42 inch (107 cm) pump tube must be replaced with the 46 inch (117 cm) pump tube supplied in the mounting kit. The new pump tube may be installed following the instructions in *Installing a New Pump Tube,* on page 101.

Once the new pump tube is installed, use the parts supplied in the controller mounting kit and follow the instructions below to prepare and mount the controller on the refrigerator. Refer to **Figure 42** Turn the controller upside down and screw the four threaded mounting rods into the four corner feet of the controller. The two middle feet are not used. The controller is now ready to be installed on the refrigerator.

1. Open the controller cover on the top of the refrigerator and orient the controller on the top of the unit so the peristaltic pump and liquid detector face the front of the refrigerator.
2. Carefully insert the threaded rods into the four mating holes on the refrigerator and push the controller down so it is against the refrigerator.
3. Working inside the refrigerator, install the spacers and wing nuts on the threaded rods.
4. Feed the pump tube down through the tube guide port into the interior of the refrigerator and route the pump tube into the distributor arm.
5. Connect the two-pin connector on the power cable to the 12 VDC plug on the controller and the six-pin connector on the flow meter cable to the flow meter connector on the rear of the controller.

Figure 42 Mounting the Control Box

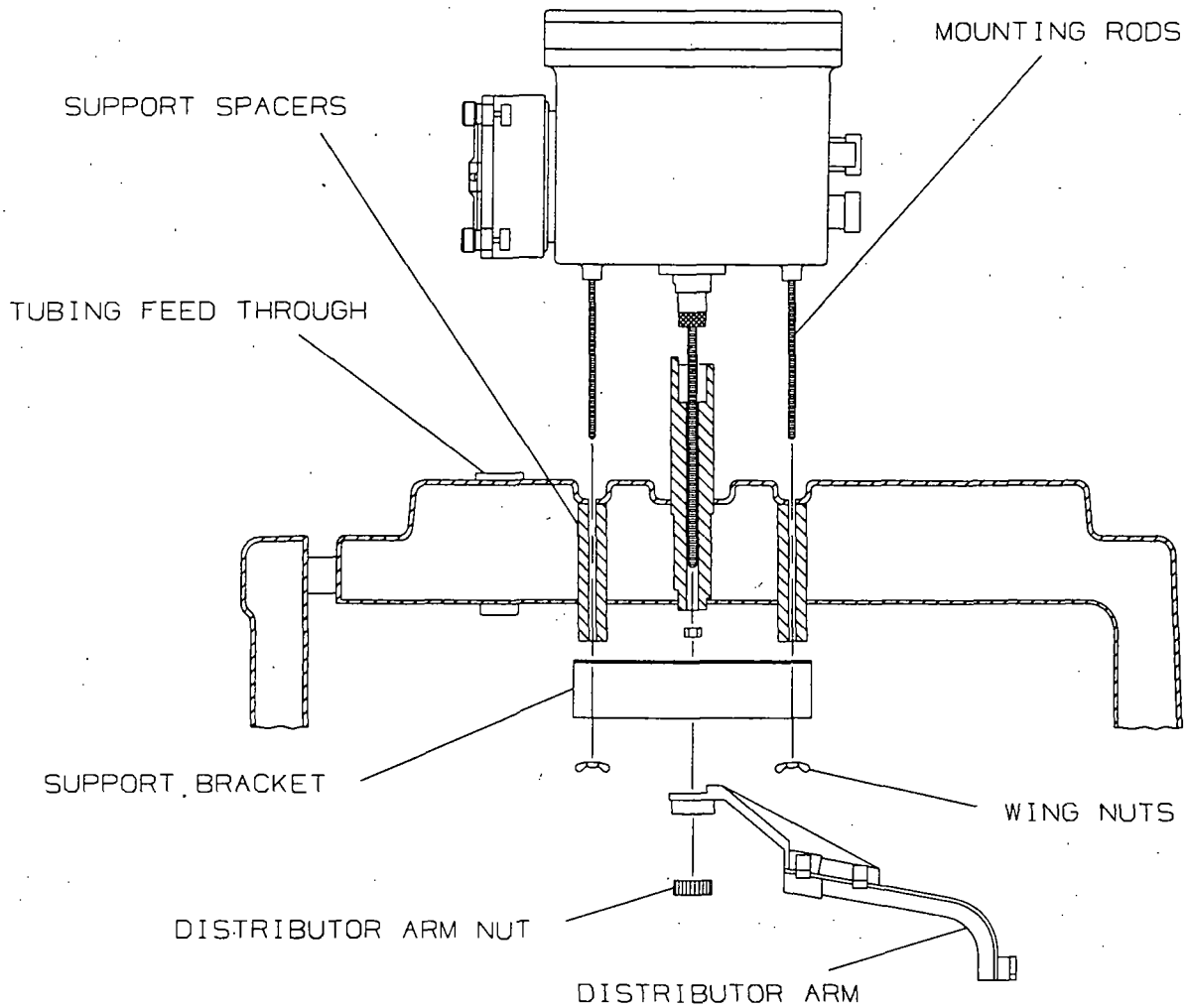

ACCESS TO ELECTRONIC COMPONENTS

To gain access to the electronic components housed in the control box:

1. Disconnect the power source from the sampler.
2. Remove the ten screws around the outer edge of the control box bezel.
3. Lift the cover and bezel off the control box and turn the cover over, as shown in **Figure 43**.
4. The control box cover assembly may be disconnected from the control box lower section by disconnecting the five connectors (see **Figure 43**) and the grounding strap (see **Figure 33**).
5. The main circuit board assembly of the 3700 Sampler is protected by an aluminum shield. To remove this shield, unscrew the stop nut that holds the short grounding strap and unscrew the four screws located in each corner of the shield. Lifting the shield off will then reveal the main circuit board shown in **Figure 44**.
6. To remove the circuit board assembly from the control box cover, unscrew the four hex threaded stand-offs and the phillips head screw, indicated in **Figure 44**. The circuit board may now be pulled away from the control box cover.
7. To completely disconnect the circuit board assembly from the cover, disconnect the connector shown in **Figure 44**.

The controller can be reassembled by reversing these steps. Ensure that all hardware and connections are secure.

Figure 43 Underside of the Control Box Cover

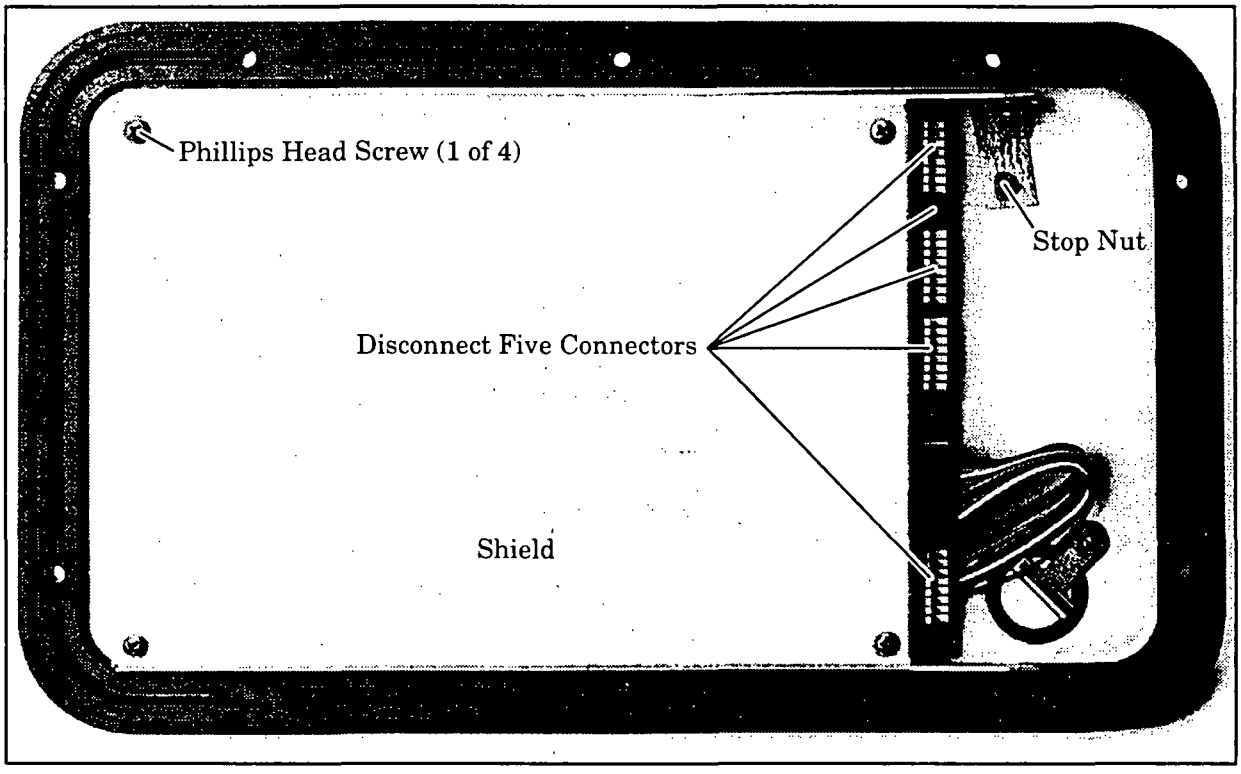

Figure 44 Main Circuit Board

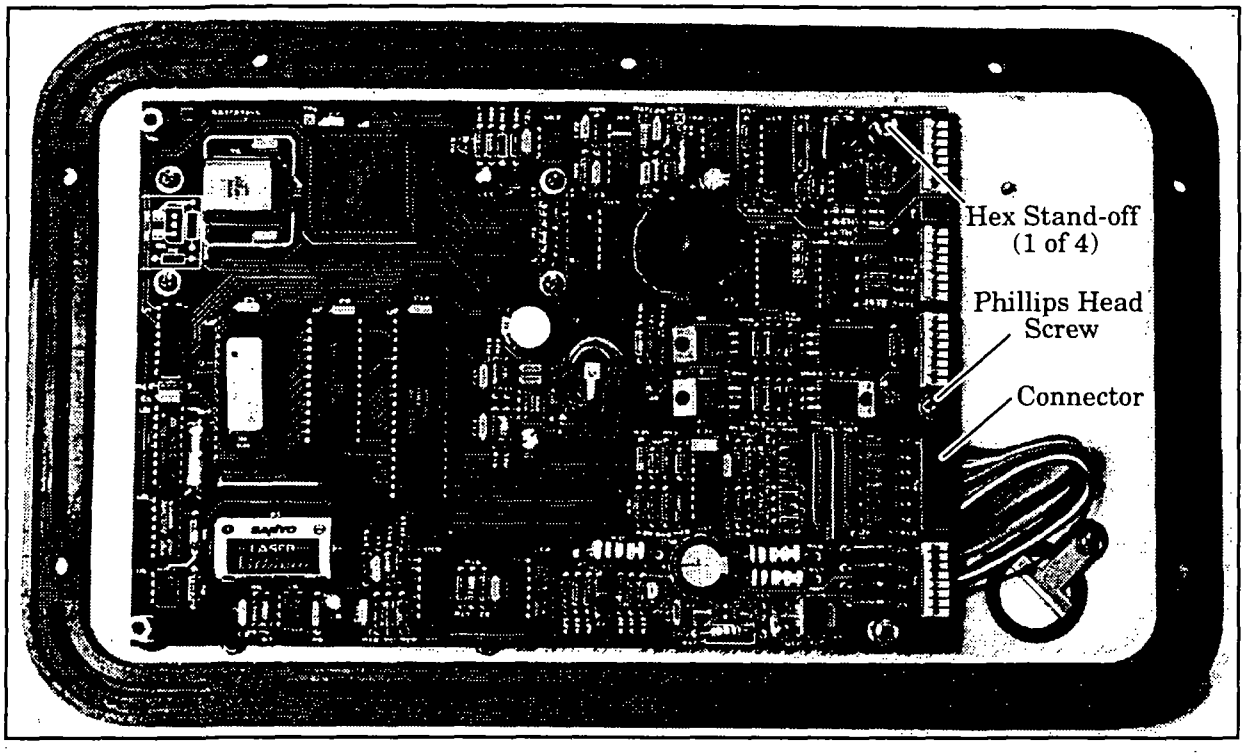

Removal of the Distributor Gear Case Assembly

The distributor gear case assembly is located in the lower section of the control box. To gain access to the lower section of the control box, follow the instructions in *Access to Electronic Components,* on page 115. Use the steps below to gain access to these and other components in the control box lower section:

1. Disconnect power from the unit.
2. Remove the two nuts, the screw, and the grounding strap indicated in **Figure 45**.
3. Lift the plastic tray straight up out of the control box.
4. The distributor gear case can be removed from the control box by unscrewing the four screws at the base of the distributor, and disconnecting the two grounding straps.

The distributor can be replaced by reversing these steps. Ensure that all hardware and connections are secure.

Removal of the Pump Gear Case Assembly

The pump gear case assembly is located in the lower section of the control box. To gain access to the lower section of the control box, follow the instructions in *Access to Electronic Components,* on page 115. Use the following steps to remove the pump gear case.

1. Disconnect power from the unit.
2. Remove the two nuts, the screw, and the grounding strap indicated in **Figure 45**.
3. Lift the plastic tray straight up out of the control box.
4. Remove the liquid detector lid and the pump lid by loosening the captivated thumbscrews on the pump exterior. **Figure 31,** on page 100 shows the location of the thumbscrews.
5. Remove the pump tubing from the interior of the pump.
6. Remove the pump rotor by loosening the machine screw and locknut attaching the rotor to the pump shaft. **Figure 32,** on page 101 shows the location of the machine screw. Rotate the rotor until you can reach the screw with a screwdriver inserted through the pump case inlet sleeve.
7. Slide the rotor off the pump shaft.
8. Remove the pump case by unscrewing the four screws on the back of pump's inner case.
9. Lift the pump gear case assembly out of the control box.

The pump gear case can be replaced by reversing these steps. Ensure that all hardware and connections are secure.

Figure 45 Control Box Tray Removal

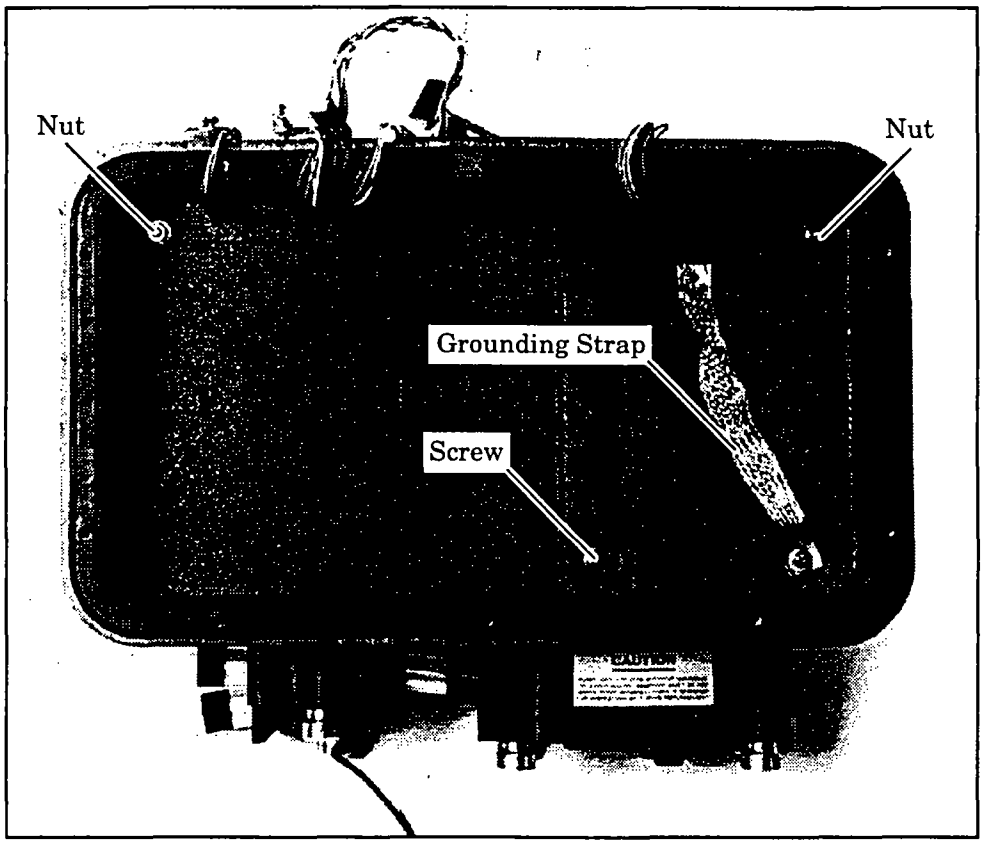

Precautions for Servicing CMOS Circuitry

Most of the circuitry in the 3700 Sampler is made up of CMOS components. Because of the oxide gate structure of these devices, they are extremely susceptible to destruction caused by the discharge of static electricity through their inputs.

CAUTION

- **Disconnect power from the refrigerator and controller when working on the unit.**
- **Keep yourself grounded when handling disassembled equipment.**

Preliminary Electronics Troubleshooting Steps

Following are suggested areas to check before attempting to service the microprocessor CPU and associated circuitry. These checks should be made before looking at the CPU and memory.

1. Supply voltage is correct.
2. Wiring harnesses, connectors, and solder joints are in good condition.
3. Appearance of physical damage, such as burned or broken components, overly hot components, or evidence of water damage.
4. Shorted or open diodes and transistors, especially drive transistors.
5. Voltage regulators working properly.
6. Excessive current draw in the circuitry.
7. Correct input signals to unit.
8. Crystal oscillator operating at proper frequency.
9. Reset circuitry working properly.

Circuit Boards

The following is a general description of the 3700 electronic circuitry. While reading this description, refer to the main circuit board schematic diagram (**Figure 46**), the case schematic diagram (**Figure 48**), and the pictorial views of the circuit boards (**Figures 47** and **49**).

The 3700FR Sampler is a microprocessor-based device which executes a program stored in ROM. The program (software) is a series of instructions that tell the microprocessor what to do in order to accomplish the various functions which the sampler must perform.

The software is discussed only as is necessary to describe the operation of the circuitry (hardware). The hardware is discussed below.

A 12 VDC connector on the side of the control box is used to connect to an external 12 V source. A 3.75 Amp PTC device provides circuit protection.

The 3700FR Sampler contains two printed circuit boards: the main board and the pump control board. The display module (attached to the main circuit board) also contains a small circuit board. This module is purchased assembled and does not contain any user-serviceable parts. Unless it is being replaced, the module should not be disturbed.

Main Board

Power is supplied to the circuitry through P4 – pin 1 is ground and pin 2 is 12 V. A 5 V switching regulator (IC U11) is used to obtain a 5 V rail from the 12 V supply. All of the ICs used in the 3700FR Sampler get their operating power from the 5 V rail. IC U11 is also used as a low voltage detector – it constantly monitors the 12 V supply. IC U17, a voltage converter, provides a -5 V supply which is needed for some components.

IC U8 is the microprocessor, IC U5 is the ROM, and IC U7 is the RAM. These three ICs make up the "brains" of the 3700FR Sampler. The microprocessor executes the program stored in ROM. While executing, information (program settings, sample data, etc.) is retrieved from and stored in RAM. A 4.608 MHz crystal oscillator (Y1) sets the microprocessor's execution speed. The 3700FR Sampler keeps track of time with a real time clock (IC U3). Both the RAM and IC U3 are battery-backed with a lithium battery (B1). IC U1 is a switch which selects between battery and system power.

Three devices allow the microprocessor to communicate with the outside world: the 2 line, 20 characters per line LCD, IC U9, and IC U18. The LCD allows for communication with the user and is connected through P3. IC U13, transistor Q2, thermistor R15, and other components provide the LCD with a temperature compensated driver voltage. By providing temperature compensation, the display quality is optimized over a wide temperature range. IC U9 and IC U18 are I/O devices which allow the microprocessor to: read the keypad, sound the beeper, advance the distributor, count pump counts, and so on.

A 24 position keypad, connected at P5, is used to direct the microprocessor through the program. Many discrete components along with IC U9 are used to decode pressed keys. All user-originated instructions to the 3700FR Sampler enter the system through the keypad.

The 3700FR Sampler is supplied with a liquid detection system that gives it the ability to accurately deliver specified sample volumes. The liquid detection system consists of a piezoelectric sensor and filtering circuitry. The sensor, mounted on the exterior of the control box, produces a signal proportional to an induced strain on the pump tubing. This signal is routed through P8 to IC U15 and its associated circuitry where it is massaged into a YES or NO indication of liquid presence. IC U15, containing a switched capacitor low pass filter and two Op Amps, is the main circuit component of the detection system.

A collection of transistors, resistors, and diodes are used to control the distributor motor. The motor control circuitry connects to the distributor through P6 and can drive the distributor in either direction. As the distributor moves, its position is monitored by an optical device mounted to the distributor assembly. IC U20 supplies the necessary current for the optical device.

An RS-232 serial communications port is connected to the system at P9. This port is used to output sampler status, program settings, and sampling results to a printer or an interrogator. IC U21, IC U19, and a handful of discrete components are used to transmit serial information, receive serial information, and sense the externally connected device.

Pump Control Board

The pump control board is an integral part of the pump assembly and serves two functions: control the pump motor and sense pump revolutions. The pump motor control consists of a 2-pole double-throw relay (K201) and transistor switches (Q201, Q202 and Q203). The relay is used to change the pumping direction and will run the pump in the reverse direction when in the rest state. Each time the pump runs, the microprocessor sends the pumping direction signal through pin 1 of P7, waits for the relay to change state, then starts the pump by sending a high signal through pin 3 of P7. Waiting for the relay to change state before applying power prevents arcing at the relay contacts.

A key element of the pump revolution count sensor is the LED-phototransistor device (IC201). Whenever the pump is running, power is supplied to IC201. A rotating disk positioned between the LED and phototransistor periodically interrupts the transmitted signal. These interruptions create pulses which are sent back to the main board at pin 8 of P7 to be counted. The microprocessor uses these counts to determine the pumped volume.

Figure 46 3700 Controller Main Circuit Board Schematic

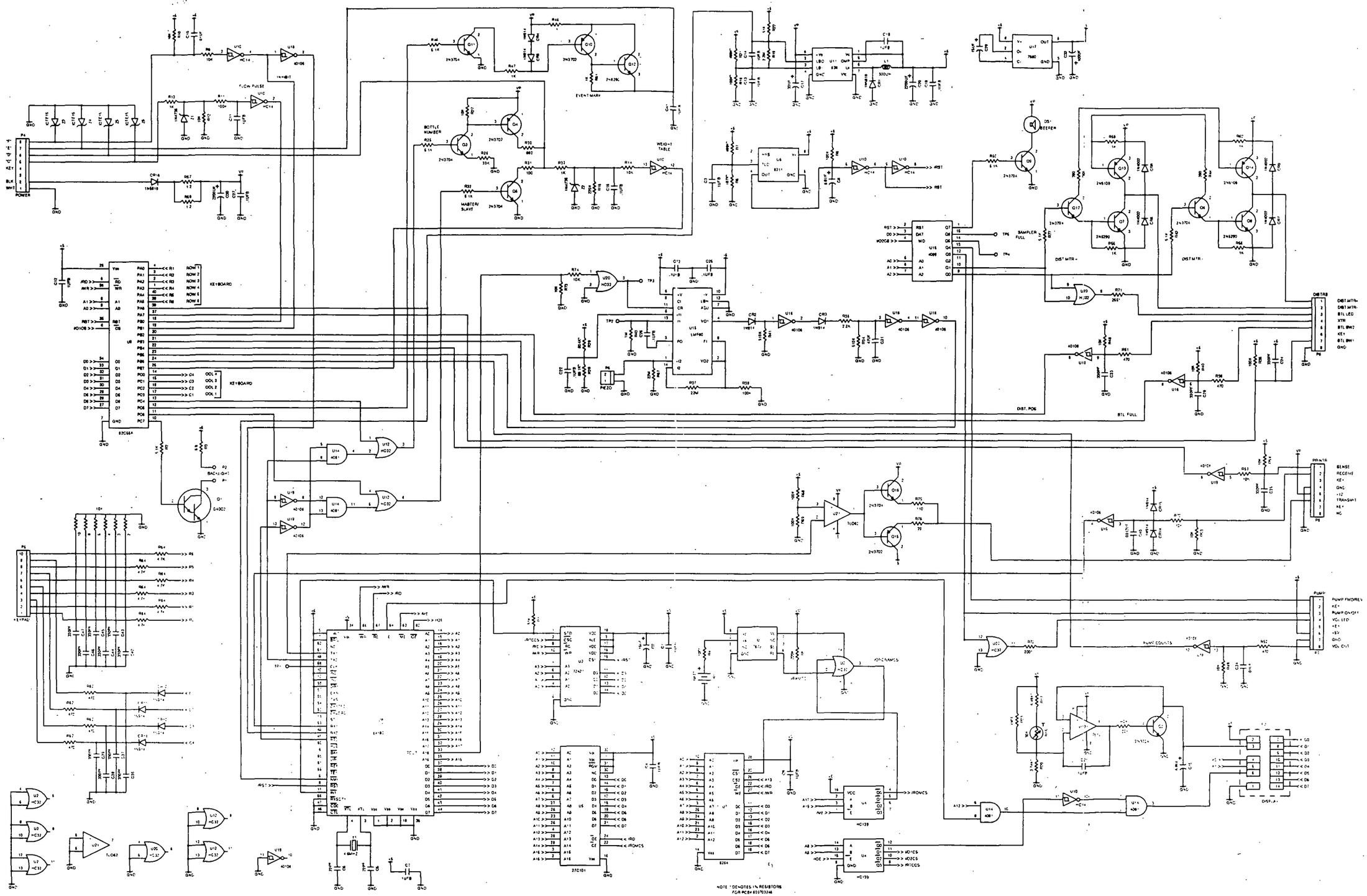

Figure 47 Main Circuit Board Component Layout

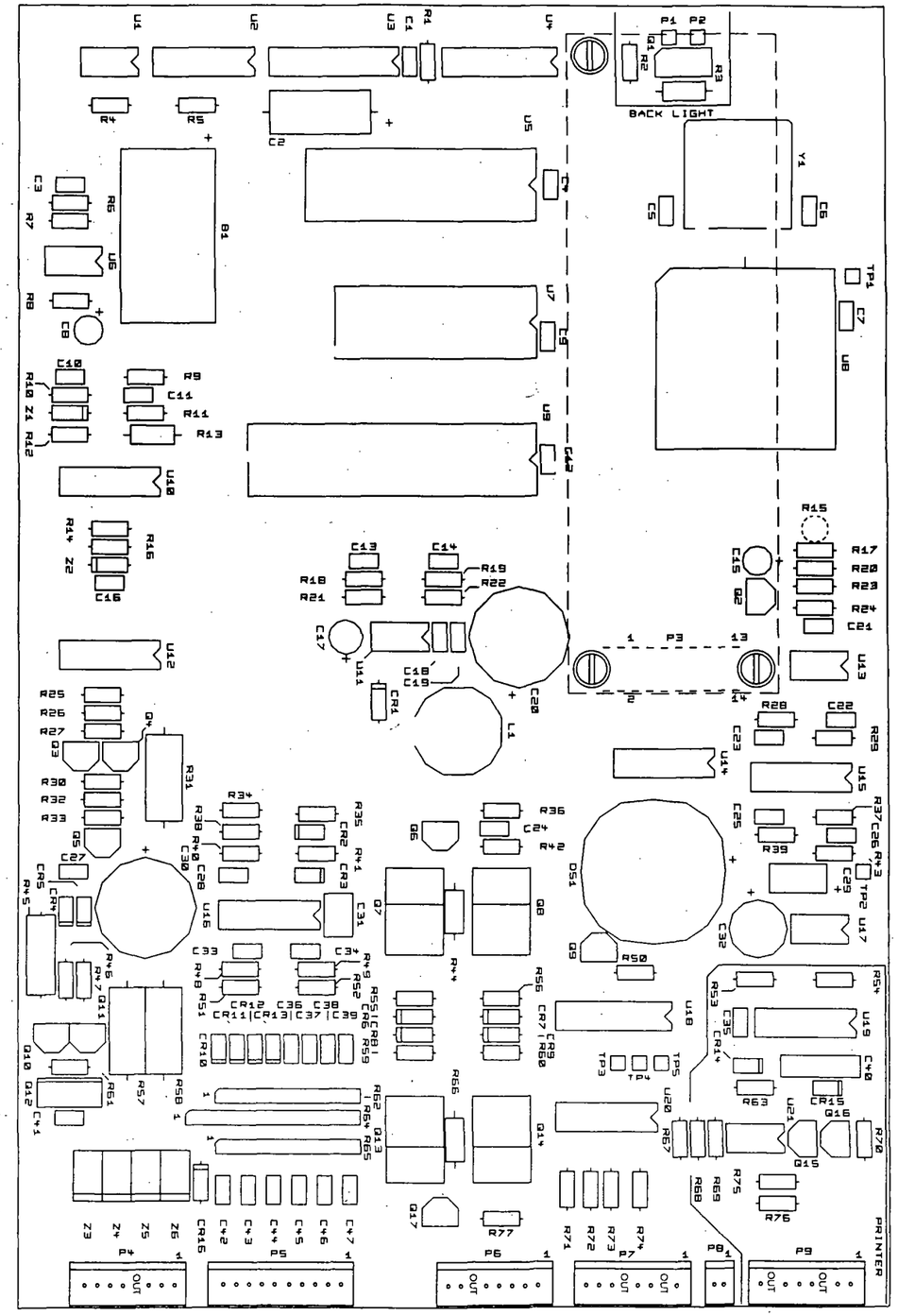

Figure 48 Case Schematic Diagram

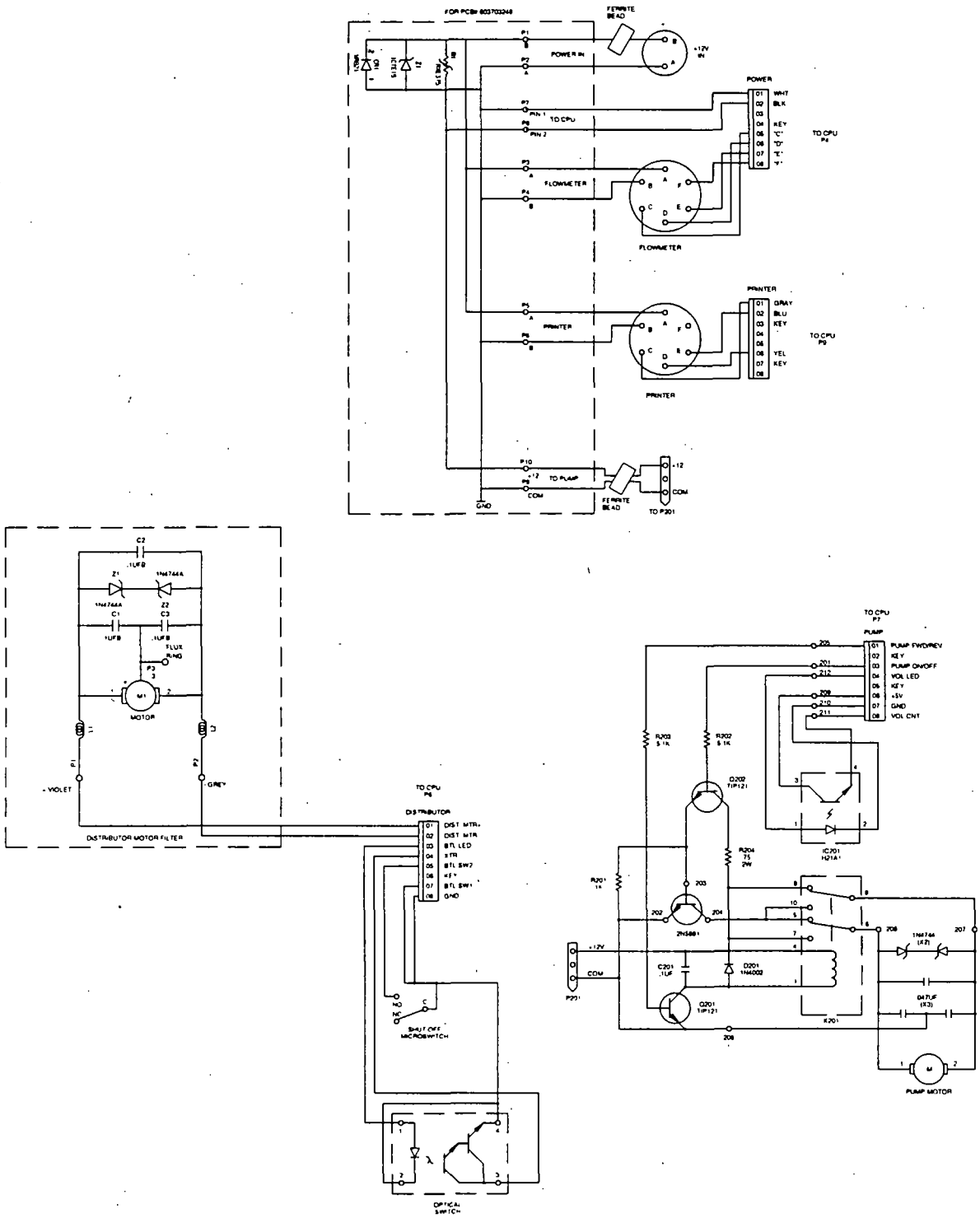

Figure 49 Optical Counter PCB Component Layout

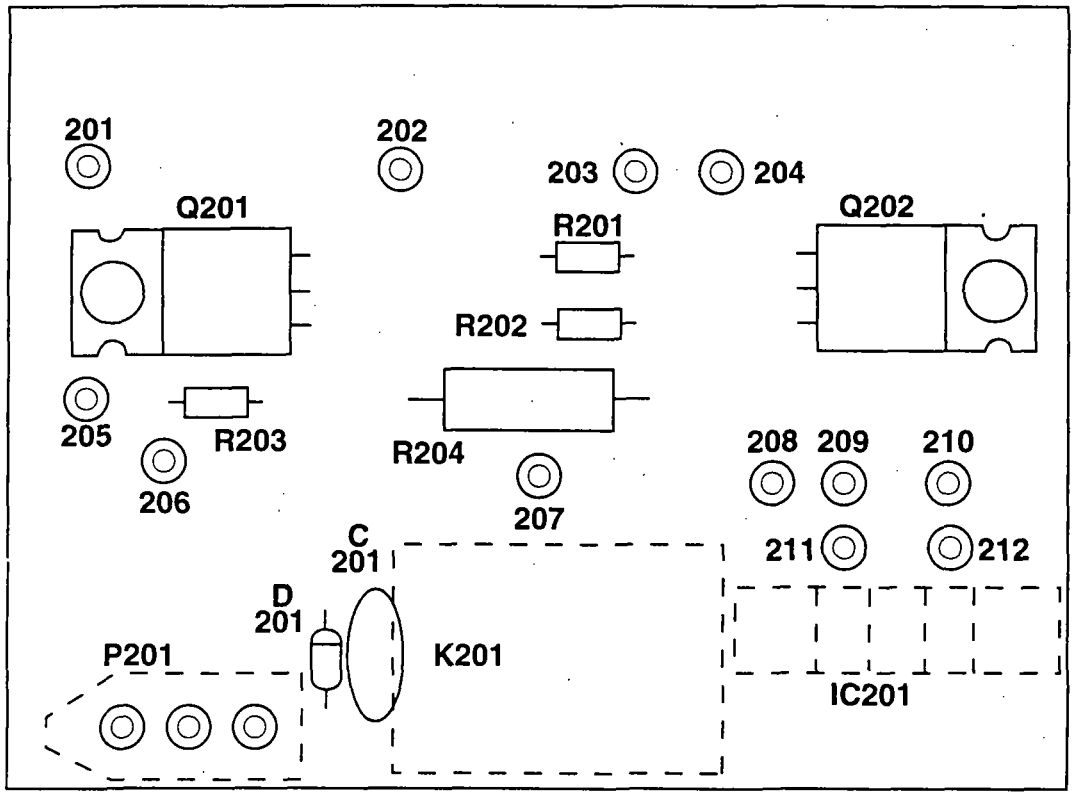

Sample Event Cycle and Delivery of Sample Volumes

The sequence of steps in a typical sequential sample event is described below. Should you suspect a malfunction in the delivery of the sample volumes, this information will assist you in determining the point at which the problem occurs.

1. A sample event is initiated.
2. The pump rotates in the reverse direction to air purge the suction line inlet of any debris.
3. The pump direction changes, pumping in the forward direction to fill the suction line.
4. After the suction line has been filled to the pump inlet, the sample volume measuring portion of the sampling cycle begins. The pump continues to rotate in the forward direction until the programmed sample volume is delivered.
5. The pump direction again changes, pumping in the reverse direction to air purge the suction line to avoid cross-contamination of samples. The pump then shuts off.
6. The sampler waits until another sample event is initiated and the cycle begins again at step 1.

Peristaltic Pump

The following is a brief description of the method by which the sample volume is determined. The 3700 Sampler uses a peristaltic pump to transport the sample from the source to the sample bottle. When compared with other suction lift sample gathering methods, a peristaltic pump has numerous advantages: simplicity, reliability, no metering chamber required, easily cleaned, etc.

Volumetric Determination

The 3700 Sampler determines the volumetric delivery of its peristaltic pump by electronically counting revolutions of the pump rotor. Each revolution of the pump rotor corresponds to a fixed number of "pump counts" and a certain volume of sample liquid. However, the volume of liquid delivered by one revolution of the pump rotor changes with the suction head and the type of suction line. At each sample event, the 3700 liquid detection system automatically compensates for changes in suction head and adjusts the volume delivered for each revolution of the pump. Thus, for a given type of suction line, each revolution of the pump rotor results in the delivery of a known amount of sample volume.

Sample Delivery

The sample pumping portion of a sample event consists of three parts: suction line fill, liquid detection, and sample volume delivery. The sampler counts the number of pump revolutions as the suction line fills. At liquid detection, the controller uses that count to determine the proper number of pump revolutions required to deliver the programmed sample volume. It is important to note that the volume delivered by a peristaltic pump can be influenced by a number of factors other than those discussed above. Thus, even with the sophistication of the sample volume measuring functions of the 3700 Sampler, the volume of sample deposited in the sample bottle may vary from the programmed value. The repeatability of a sample volume from sample to sample (which normally is the most important consideration) will typically be within the ± 10 ml specification stated in **Table 1,** on page 6.

Replacement Parts List

An illustrated list of common replacement parts for the 3700FR/3720 follows. When ordering a replacement part, be sure to include the Isco part number, a complete description, and the serial number of the unit on which the part is to be used. The controller and the refrigerator are serialized separately. The controller serial number is located on the side of the unit and the refrigerator serial number is located on the inside of the door.

Accessory Parts List

A list of options and accessory parts described throughout this manual can be found in the *Appendix A Accessories List,* on page 136. When ordering an option or accessory, include the part description and the Isco part number.

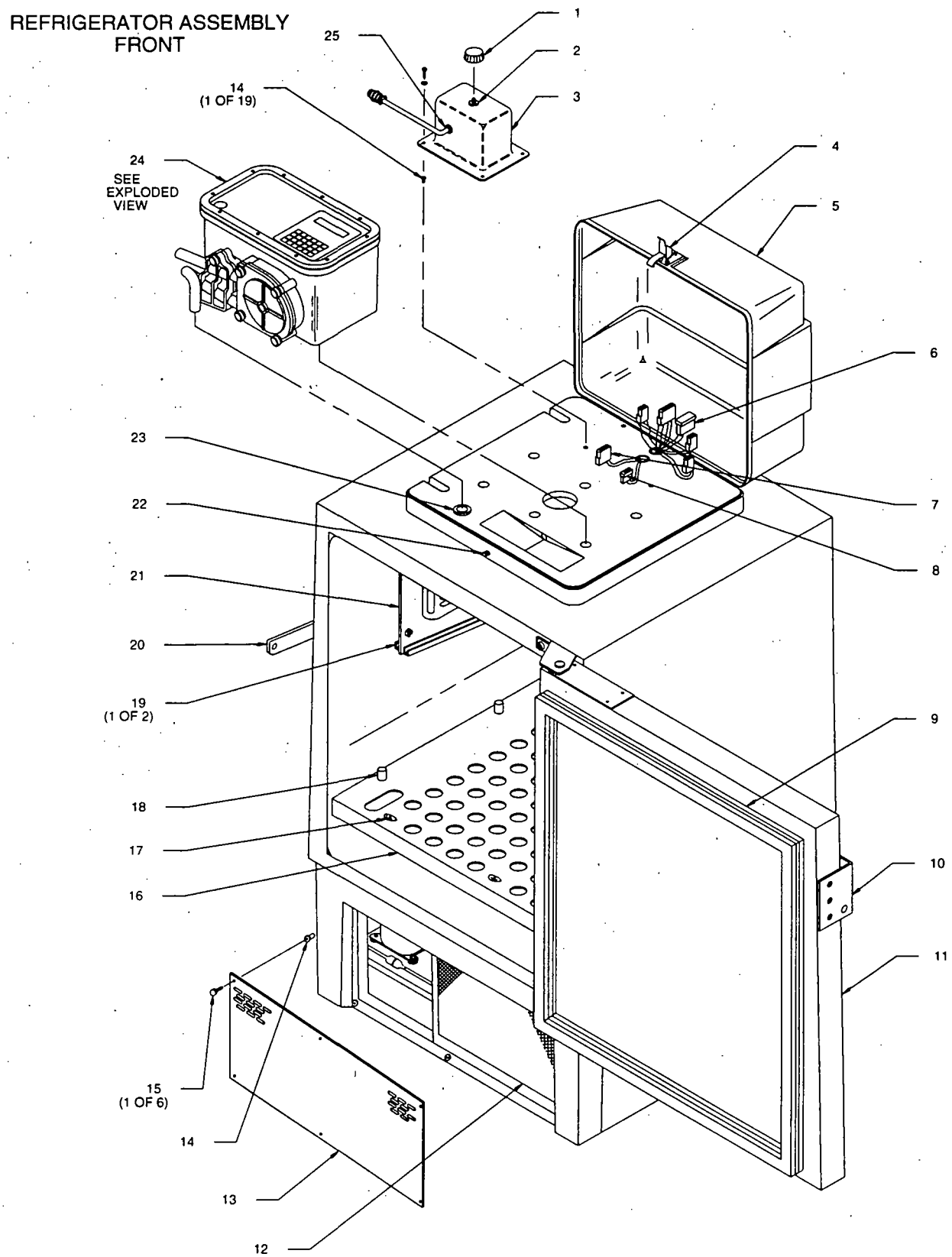
REFRIGERATOR ASSEMBLY
FRONT
1
2
3
4
5
6
7
8
9
10
11
12
13
14
(1 OF 19)
15
(1 OF 6)
16
17
18
19
(1 OF 2)
20
21
22
23
24
SEE
EXPLODED
VIEW
25

REFRIGERATOR ASSEMBLY
FRONT

ITEM	INVENTORY NO.	DESCRIPTION
1	180001201	KNOB PKG-100B-1/4
2	380951070	POT. 10K 2W 3/4 TURN
3	602723150	THERMOSTAT HOUSING, REVD
4	109080000	OVER CENTER DRAW LATCH-SOUTHCO
5	602723051	TOP COVER MOD
6	602724025	REFRIG WIRING ASSY, QA
7	602724017	AIR TEMP SENSOR WIRING ASSY
8	602724009	EVAP TEMP SENSOR WIRING ASSY
9	602723005	GASKET, REFRIGERATOR DOOR
10	612723042	DOOR HANDLE PWDR COATED
11	602724005	REFRIGERATOR DOOR ASSY (BEFORE SN 08243-001)
	602724062	REFRIGERATOR DOOR ASSY (BEGINNING WITH SN 08243-001
12	602723016	REFRIGERATOR FILTER (BEFORE SN 11901-001)
	609003182	FILTER, REFRIG (BEGINNING WITH SN 11901-001)
13	602723032	REFRIGERATOR GRILLE
14	239090832	WELL-NUT FASTENER #8-32 THD
15	602724021	THUMBSCREW ASSY
16	612723028	WIRE RACK MTG PLATE CLR ANDZD
17	602723041	WIRE RACK STOP
18	602724065	ADJ POST REPLACEMENT KIT
19	602723072	DRIP CHANNEL
20	612723043	DOOR LATCH PWDR COATED
21	602723035	EVAPORATOR PLATE MOD.
22	602723054	KEEPER, TOP COVER LATCH
23	602724014	TUBING FEED THRU
24	603704001	3700 SAMPLER CONTROLLER
25	209007505	BSHG SR NYL .300 .500 .090

REFRIGERATOR ASSEMBLY
BACK

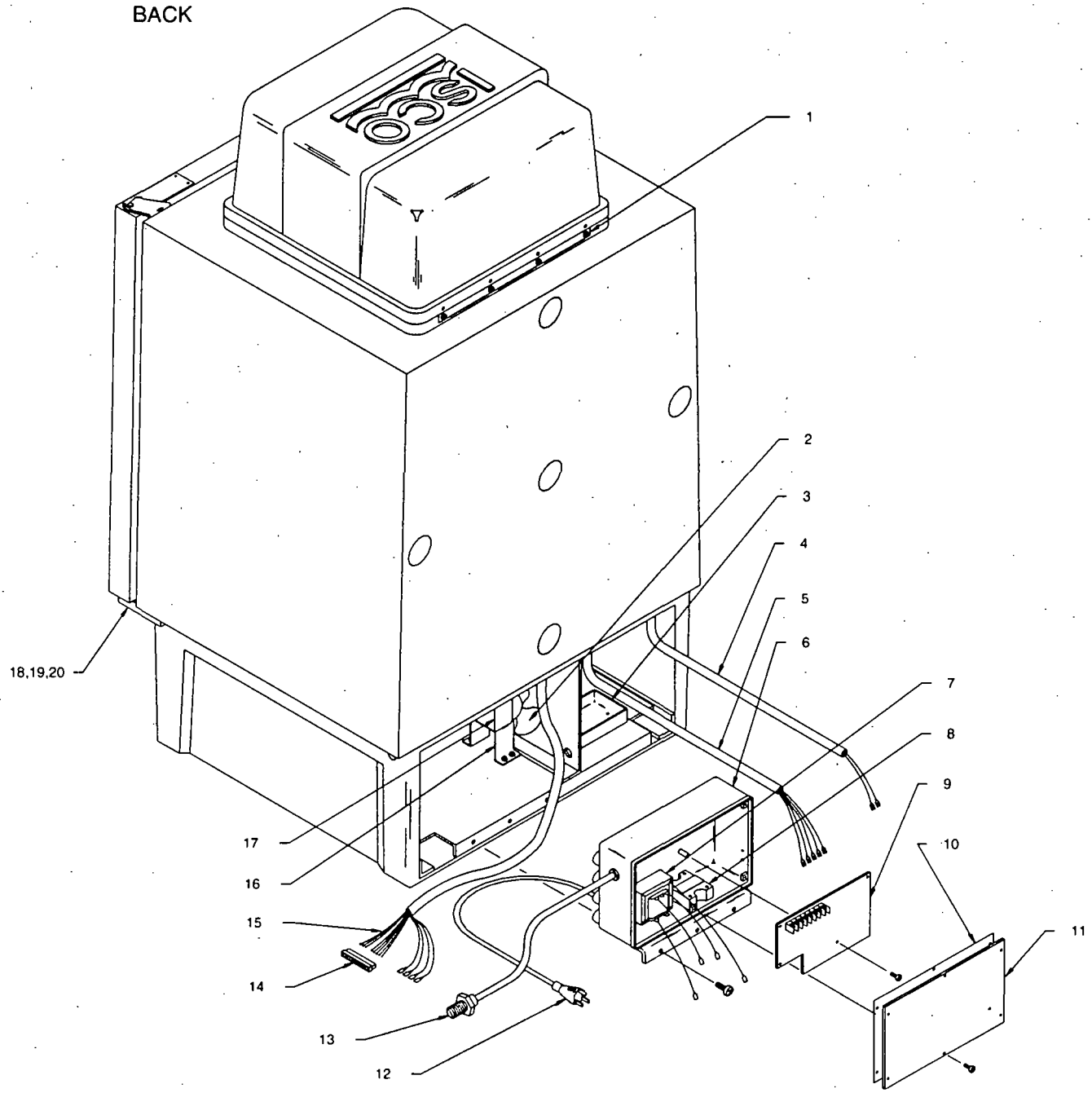

REFRIGERATOR ASSEMBLY
BACK

ITEM	INVENTORY NO.	DESCRIPTION
1	602723085	COVER HINGE
2	209019501	FAN BLADE 30 PITCH 7" DIA PUSH (FOR UNITS BEFORE SN 11901-001)
	209019503	FAN BLADE ALUM 40DEG P 7 DIA (FOR UNITS BEGINNING WITH SN 11901-001)
3	602723068	DRIP PAN
4	602724029	INTERIOR HEATER ASSY, QA
5	602724030	CRANKCASE HEATER ASSY, QA
6	619004095	TEMP CONTROL BOX SUB ASSY, IRR
7	602724037	XFMR/THERMAL CUT-OUT ASSY, QA
8	686700067	REPLACEMENT KIT FOR REFR RELAY
9	609004205	PCB ASSY THERMOSTAT LOGIC CE
10	612723104	GASKET TEMP BOX
11	609003319	TEMP CONTROL BOX COVER IRR
12	602724060	LINE CORD ASSY W/JUMPER
13	602724036	AMBIENT TEMP SENSOR ASSY, QA
14	149301606	MOLEX PLUG W/LOCK RAMP 6 CONTACT
15	602724025	REFRIG WIRING ASSY, QA
16	602723133	FAN MOUNT
17	304230003	MOTOR FAN 4W 115V (FOR UNITS BEFORE SN 11901-001)
	304230004	MOTOR FAN 4W 230V (FOR 230VAC UNITS BEFORE SN 11901-001)
	304230009	MOTOR FAN 115VAC 9W (FOR ALL UNITS BEGINNING WITH SN 11901-001)
18	602724066	DOOR HINGE ASSY BOTTOM
19	231014912	SCR M SST PH P 1/4-20 X 3/4
20	602723007	HINGE BUSHING

CONTROLLER MOUNTING KIT
1 OR 24 BOTTLE

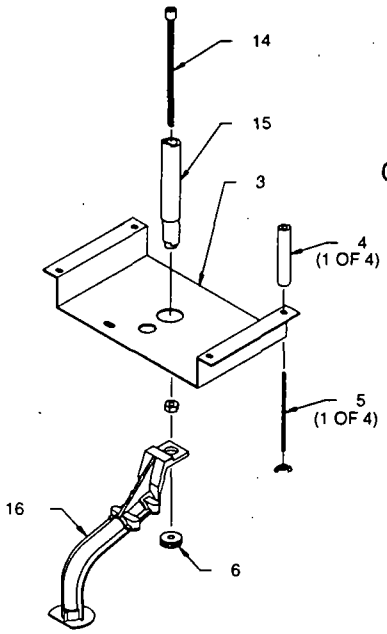

CONTROLLER MOUNTING KIT
2 BOTTLE

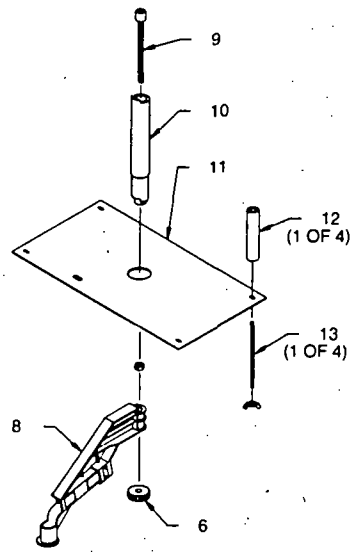

CONTROLLER MOUNTING KIT
8 BOTTLE

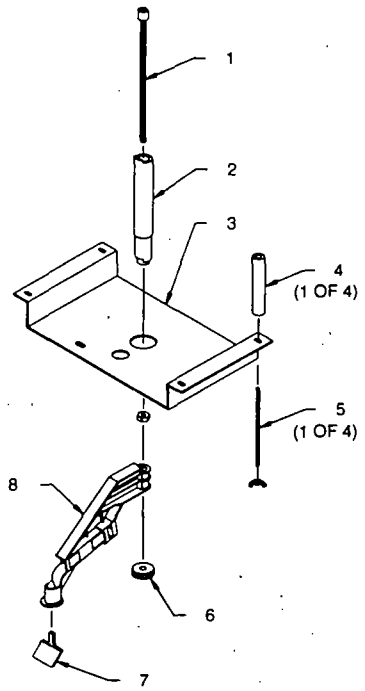

ITEM	INVENTORY NO.	DESCRIPTION
1	602724041	DRAW BOLT ASSY, 8 BTL
2	602723098	DIST SHAFT EXTENSION, 8 BTL
3	612743009	SUPPORT BRACKET CLR ANDZD
4	602723064	SPCR 3/4 RND DELRN .19ID X 3-9/16
5	602723065	THD ROD SST 8-32 X 4-3/4LG
6	602923007	DISTRIBUTOR ARM NUT
7	612743039	LIQUID DEFLECTOR PTFE COATED
8	602903008	DISTRIBUTOR ARM
9	602724040	DRAW BOLT ASSY, 2 BTL
10	602723097	DIST SHAFT EXTENSION, 2 BTL
11	612743037	SUPPORT BKT 2 BTL CLR ANDZD
12	602733010	SPCR 3/4RND DELRIN .19ID X 2-3/4
13	602733009	CONTROLLER MOUNTING ROD
14	602724019	DRAW BOLT ASSY, 24 BTL
15	602723057	DIST SHAFT EXTENSION, 24 BTL
16	602744028	DISTRIBUTOR ARM ASSY

BOTTLE RACK ASSEMBLY
24 PLASTIC BOTTLES

BOTTLE RACK ASSEMBLY
24 GLASS BOTTLES

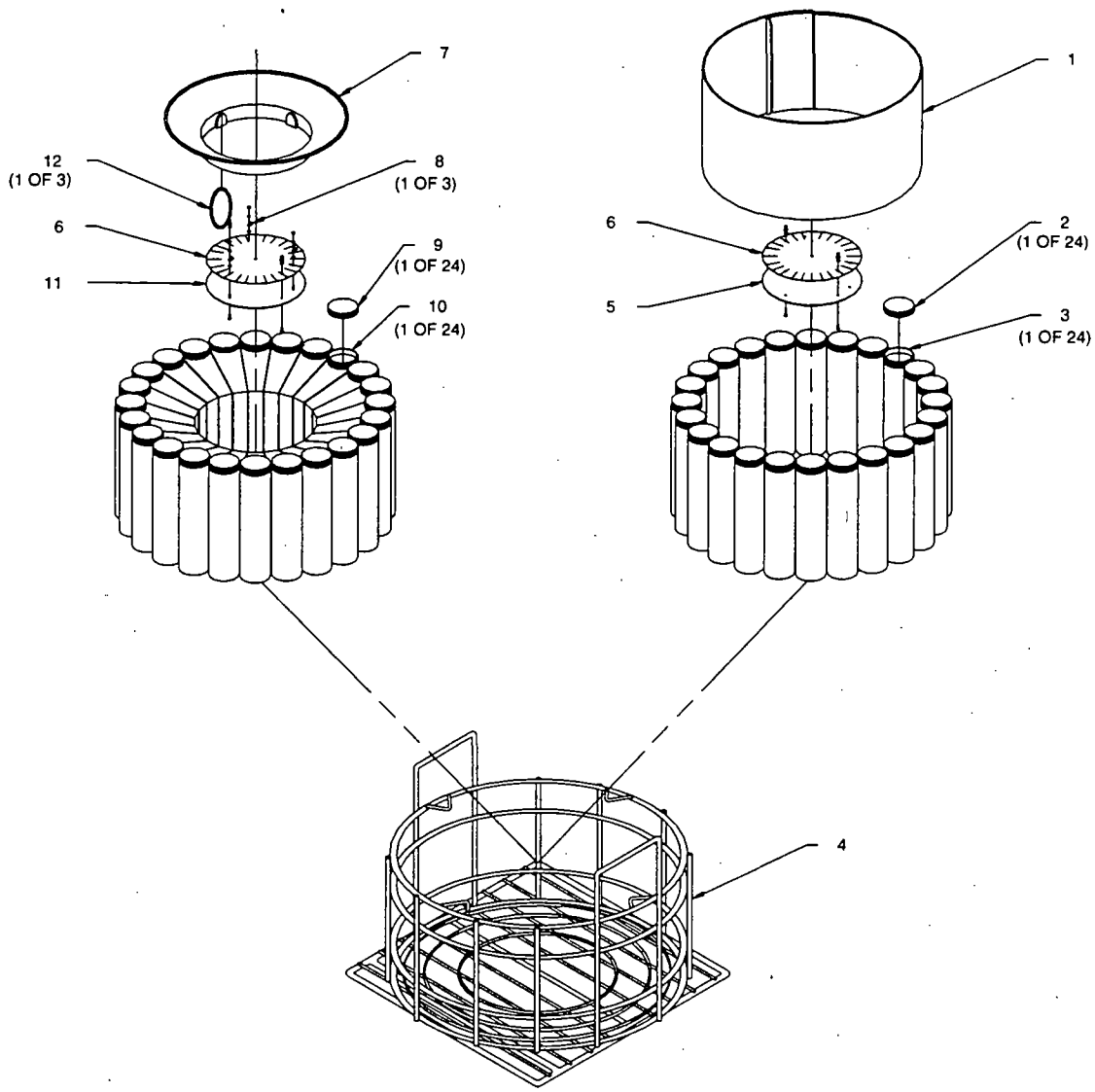

ITEM	INVENTORY NO.	DESCRIPTION
1	602724020	EXPANDER ASSY GLS BTL
2	299048406	CAP POLYPRO 48MM W/TEF LINER
3	601683132	BOTTLE GLS 2100/2700
4	602723006	BOTTLE WIRE RACK
5	612723009	WIRE RACK PLATE IRR
6	602723010	LABEL BOTTLE LOCATION
7	602703118	RETAINING RING 1L BTL
8	489000200	CLAMP CBL .25 NYL
9	299048407	CAP W/POLYETHYLENE FOAM LINER
10	602103095	1L BOTTLE POLYPROPYLENE
11	602724022	BASE PLATE ASSY
12	603704111	BOTTLE HOLD DOWN CORD ASSY

BOTTLE RACK ASSEMBLY
8 PLASTIC BOTTLES

BOTTLE RACK ASSEMBLY
8 GLASS BOTTLES

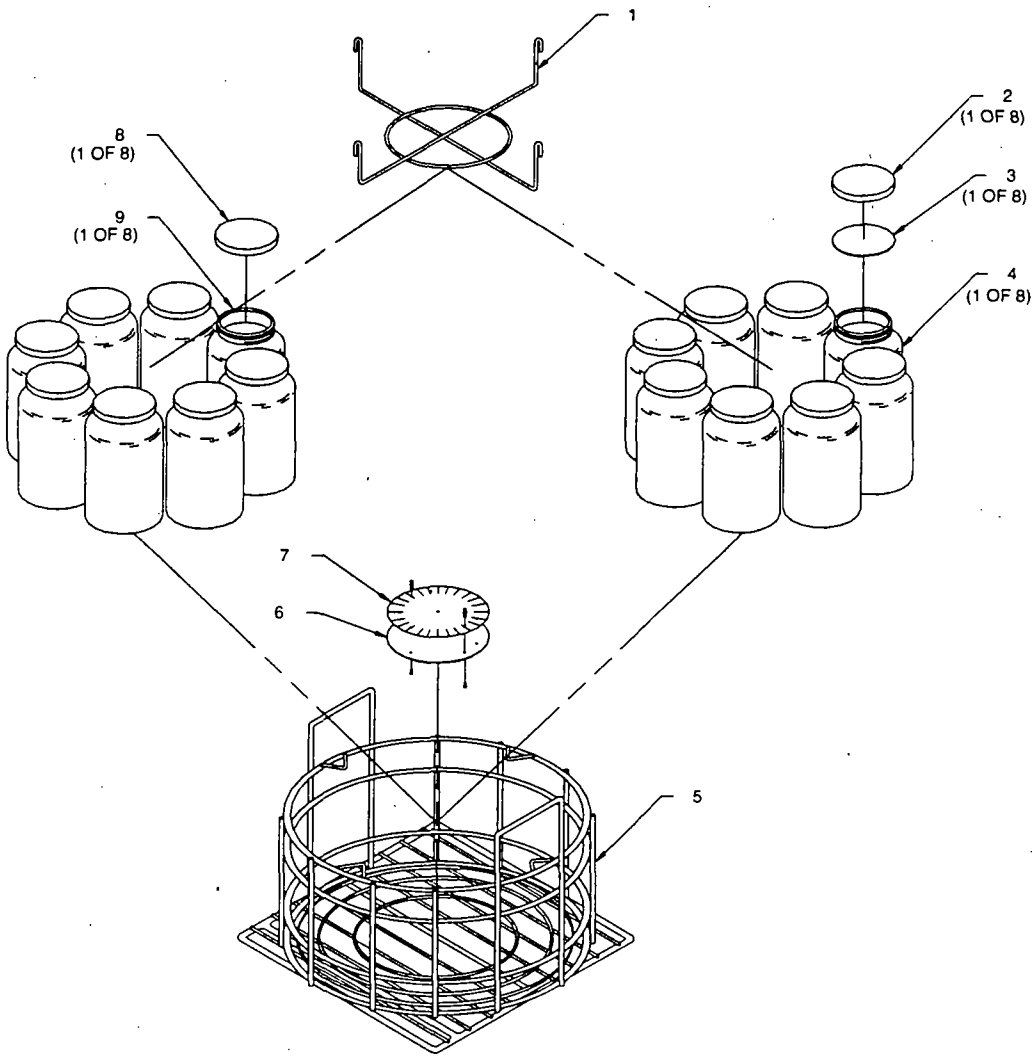

ITEM	INVENTORY NO.	DESCRIPTION
1	602743024	EIGHT BOTTLE ADAPTER
2	291000002	CAP POLYPRO LNRLS 83MM
3	299008900	LNR - TEF 83MM X .020 THK
4	291000800	JAR GLS 1/2 GAL BALL
5	602723006	BOTTLE WIRE RACK
6	612723009	WIRE RACK PLATE IRR
7	602723010	LABEL BOTTLE LOCATION
8	291000003	CAP POLYPRO LNRLS 100MM
9	299001902	JAR POLYETH 4 PT JAR WD MOUTH

BOTTLE RACK ASSEMBLY
2 PLASTIC BOTTLES
(3700R ONLY)

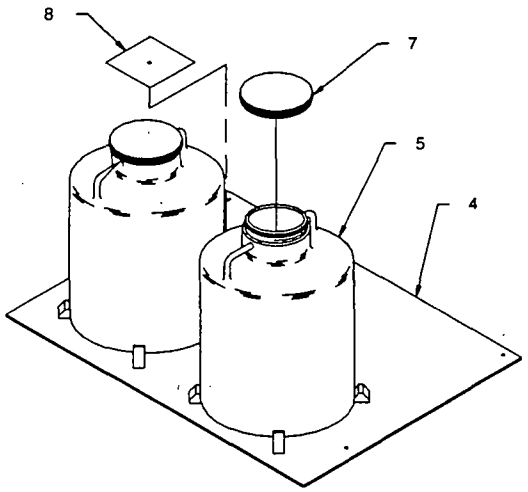

BOTTLE RACK ASSEMBLY
2 GLASS BOTTLES

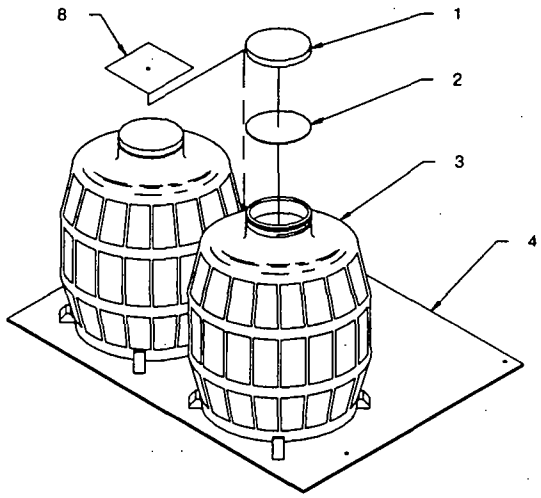

BOTTLE RACK ASSEMBLY
2 PLASTIC BOTTLES
(3700FR ONLY)

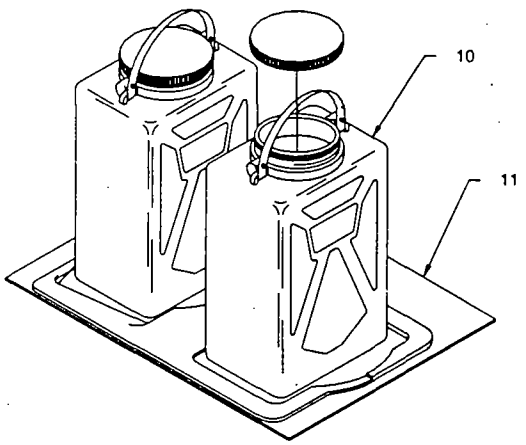

SINGLE BOTTLE SAMPLING
PLASTIC OR GLASS

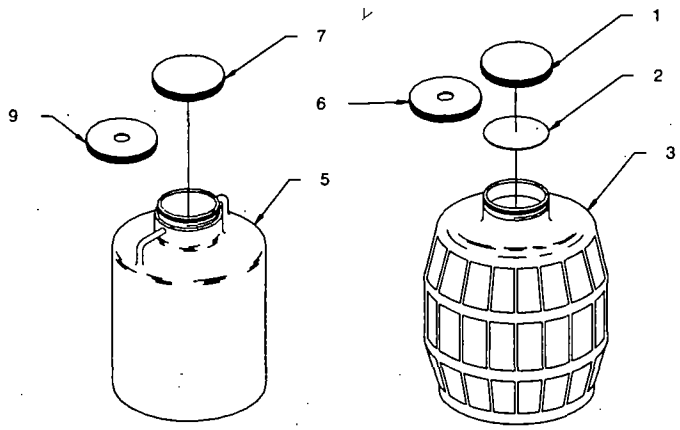

ITEM	INVENTORY NO.	DESCRIPTION
1	291000001	CAP POLYPRO LNRLS 120MM
2	299012000	LNR TEF 120MM X .020 THK
3	291000000	BTL GLS 2-1/2 GAL W/CAP BALE
4	602743038	LOCATING BASE - 2 BOTTLE
5	299001304	BTL NALGENE 2-1/2 GAL W/CAP
6	603004184	LID & LINER MOD ASSY 120MM
7	299001303	CAP BOTTLE LID
8	602743040	LOCATING BASE RETAINER - 2 BOTTLE
9	601623027	LID MOD PLS BTLS
10	299001307	BTL NALGENE 2 GAL REC W/CAP
11	602723102	LOCATING BASE, 2 BTL

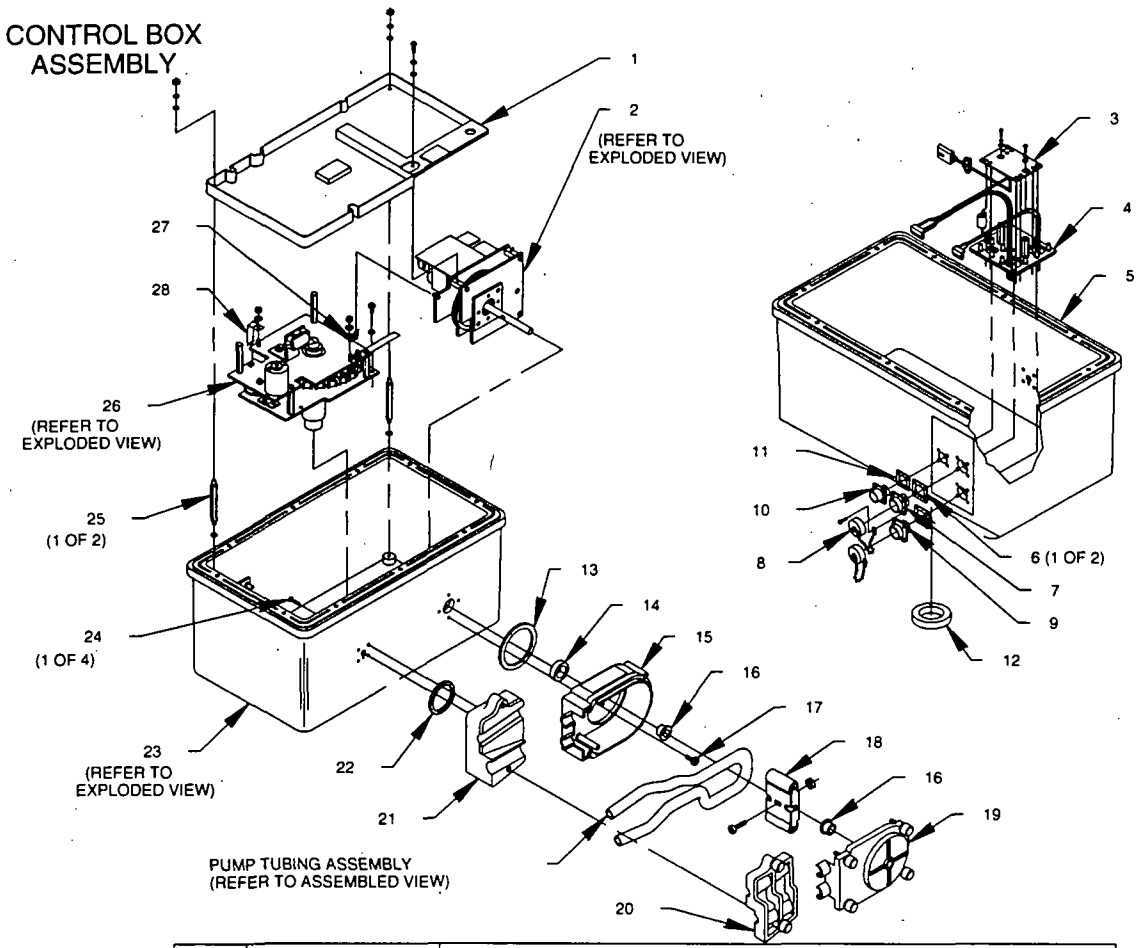

ITEM	INVENTORY NO.	DESCRIPTION
1	603703252	DESICCANT TRAY CE
2	603704154	PUMP GEAR CASE ASSEMBLY CE
3	603704151	PCB ASSY POWER SUPPLY CONN
4	603704156	BACK PLATE ASSY W/GASKET CE
5	603704089	CONTROL BOX MOD ASSY
6	601473057	SEAL GASKET AMP 6 PIN
7	140100600	AMP PANEL MT MS3102A-14S-6P
8	149100100	AMP DUST COVER MS9760-14
9	603704091	PRINTER CONNECTOR ASSY
10	140100201	PANEL MT MS3102R-10SL-4P
11	601393082	SEAL GASKET AMP 2 PIN
12	202999904	LIP SEAL 1-1/2" BORE 1" SHAFT
13	202100135	O-RING #135 -BUNA-N -50 DUROME
14	202999903	LIP SEAL 3/4" BORE 3/8" SHAFT
15	603704019	PUMP HOUSING ASSY - INSIDE (INCLUDES ITEMS 13-16)
16	603703012	PUMP HOUSING BUSHING
17	231914512	SST 8-32 X 3/4" SELF SEALING SCREW
18	602704019	PUMP ROTOR ASSY
19	603704017	PUMP HOUSING ASSY-OUTSIDE (INCLUDES ITEM 16)
20	603704021	DETECTOR LID ASSY
21	603704022	DETECTOR BASE ASSY
22	202401237	O-RING 1.23ID .103W 5OD SILICONE
23	603704152	CONTROL BOX SUB ASSEMBLY CE
24	231019508	SCR SS SST PH S 8-32 X 1/2
25	602703170	STDF 1/4 HEX SST 6-32 MALE X 3 LG
26	603704153	DISTRIBUTOR DRIVE ASSEMBLY CE
27	603703255	STRAP INTERCONNECT 2.25"
28	603703256	STRAP INTERCONNECT 5.5"

PUMP GEAR CASE ASSEMBLY

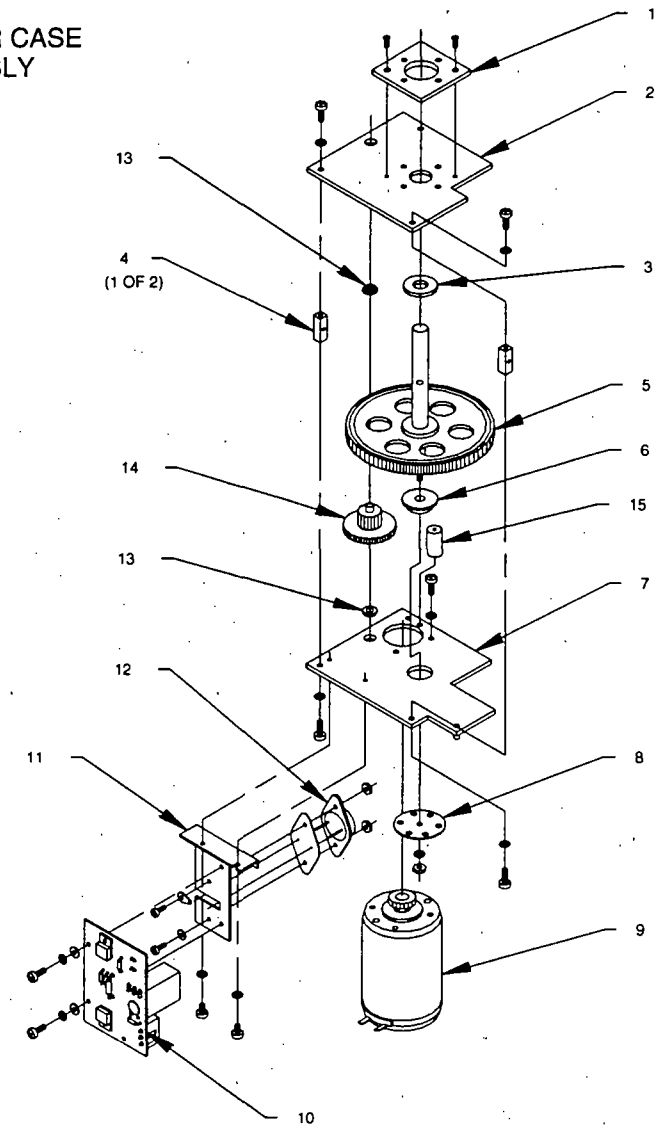

ITEM	INVENTORY NO.	DESCRIPTION
1	602703037	PUMP SHAFT SPACER PLATE
2	602703050	PUMP PLATE
3	602703058	SPCR 1RND DELRIN .380ID X .060
4	602703096	STDF 1/4SQ ALUM 6-32 X .75 LG
5	602704010	PUMP SHAFT ASSY
6	602703076	BRG FLG DELRIN .275ID.625OD.31
7	603704160	PLATE MOTOR ASSEMBLY CE
8	602703063	PUMP SHAFT OPTICAL DISK
9	602704009	PUMP MOTOR ASSY
10	602704039	PCB ASSY OPTICAL COUNTER
11	602704048	MTG PLATE ASSY, OPT COUNTER
12	402025801	TRANSISTOR 2N5881
13	201311200	FLANGED BRONZE BEARING #FB-35-1
14	602704008	PUMP GEAR SHAFT ASSY
15	602703077	STDF 3/8RND ALUM 6-32 X .75

DISTRIBUTOR DRIVE ASSEMBLY

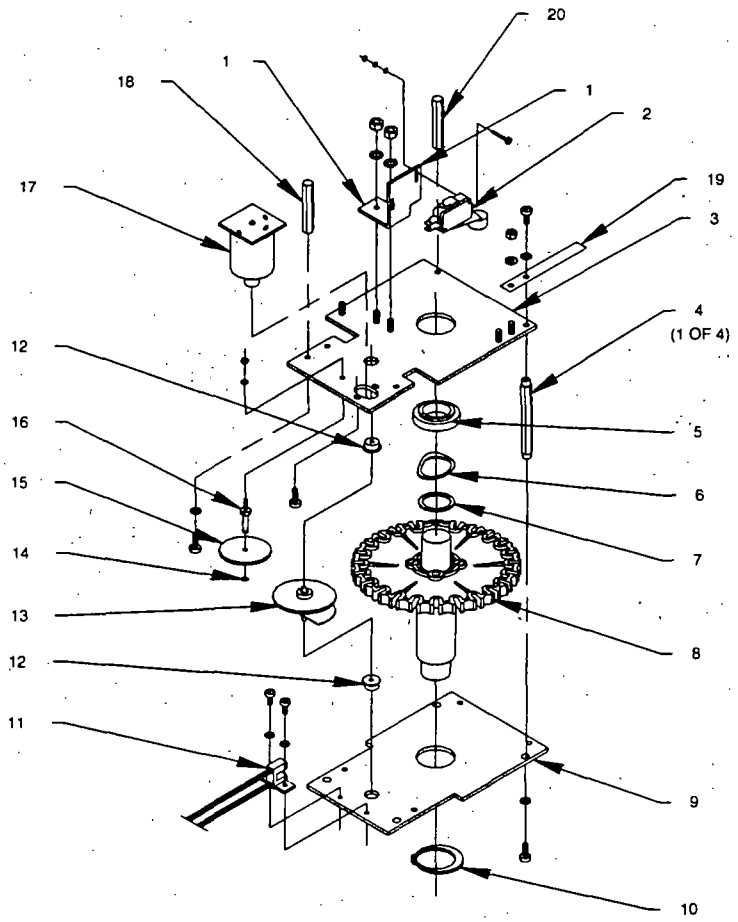

ITEM	INVENTORY NO.	DESCRIPTION
1	603703016	MICROSWITCH MOUNTING PLATE
2	601484033	MICROSWITCH ASSY, SHUT-OFF
3	603704163	PLATE DISTRIBUTOR TOP ASSY CE
4	603703038	STDF, DIST DRIVE
5	603703009	BUSHING, TOP SUPPORT
6	233609000	CURVE SPRING WASHER .81ID 1.10
7	233019000	SST FLAT WASHER .969X.770X.031
8	603704012	GENEVA DISTRIBUTOR SHAFT ASSY
9	603703250	DISTRIBUTOR BASE PLATE CE
10	209001710	RTNG RING STL 1.0 SHF .940 DIA.
11	603704010	WIRING ASSY, DISTRIBUTOR
12	201311300	BEARING BRONZE FL .127 ID X .315 OD
13	603704011	GENEVA DRIVE SHAFT ASSY
14	209000501	RTNG RING SST .125 SFT .095 DIA
15	602703062	GEAR MOD, N48-12-80 .COMB.
16	602703151	IDLER SHAFT
17	603704165	DISTRIBUTOR MOTOR ASSY CE
18	603703036	STDF 1/4" HEX ALUM 6-32 X 1.560LG
19	603703251	STRAP SHAFT GROUNDING
20	603703260	STDF .25 HEX ALUM 6-32X1.50LG

CONTROL PANEL ASSEMBLY

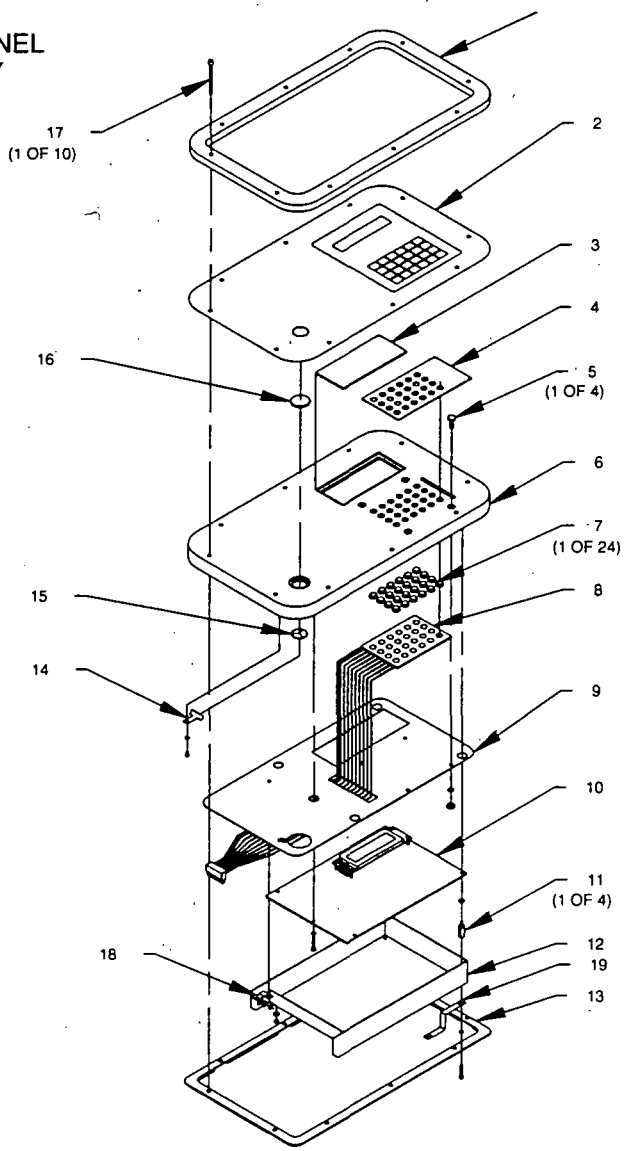

ITEM	INVENTORY NO.	DESCRIPTION
1	603703013	CONTROL PANEL RING
2	603703032	LABEL CONTROL PANEL
3	603703030	DISPLAY WINDOW
4	602703087	KEYPAD STATIC SHIELD
5	231014407	SCR M SST HH 6-32 X 1/2
6	603704082	INSERT ASSY CONTROL PANEL
7	602903083	KEYBOARD BUTTON
8	603704008	WIRING ASSY KEYPAD
9	603704161	EMI BASE PLATE ASSY CE
10	603704150	PCB ASSEMBLY CPU CE
11	603703028	STDF 1/4 HEX SST 6-32M/F .781LG
12	603704162	EMI SHIELD ASSY CE
13	602703010	CONTROL BOX GASKET
14	602703064	HUMIDITY INDICATOR HOLD DOWN
15	490001300	HUMIDITY INDICATOR CARD
16	602703075	HUMIDITY INDICATOR WINDOW
17	231116620	SCR CAP SST SH 8-32 X 1-1/4
18	603703255	STRAP INTERCONNECT 2.25"
19	603703256	STRAP INTERCONNECT 5.5"

Appendix A Accessories List

General Accessories

Extra Silastic pump tubing, 46" length 60-3704-044
Model 3700FR Sampler controller 68-3720-025
Extra Pocket Guide, Model 3700R/3700FR 60-3703-178
Plastic graduated cylinder, 1000 ml, for sample volume calibration 299-0020-00

Bottles and Caps

Sample bottles, 1000 ml polypropylene without caps, case of 100 68-2100-008
Caps for 1000 ml polypropylene bottles, with polyethylene foam liners, case of 100 68-2100-010
Sample bottles, 350 ml glass without caps, case of 100 68-2100-002
Caps for 350 ml glass bottles with Teflon liners, case of 100 68-2100-003
1000-ml polypropylene sample bottles Set of 24, includes polyethylene foam lined caps 68-2100-007
350-ml glass sample bottles Set of 24, includes Teflon lined caps 68-2100-001
2.5 gallon polyethylene container with cap 299-0013-04
2.5 gallon glass container with cap and Teflon liner 68-2700-005
4 gallon polyethylene container with cap 299-0013-05

Suction Lines, Pump Tubing, and Strainers

1/4" ID x 10' vinyl suction line with weighted polypropylene bodied strainer 60-3704-067
1/4" ID x 25' vinyl suction line with weighted polypropylene bodied strainer 60-3704-068
3/8" ID x 10' vinyl suction line with weighted polypropylene bodied strainer 60-3704-071
3/8" ID x 25' vinyl suction line with weighted polypropylene bodied strainer 60-3704-072
3/8" ID x 10' Teflon suction line with protective coating, without strainer 60-1683-146
3/8" ID x 25' Teflon suction line with protective coating, without strainer 60-2703-114
1/4" ID vinyl tubing, bulk 100' 68-1680-055
1/4" ID vinyl tubing, bulk 500' 68-1680-056
1/4" ID vinyl tubing, bulk 1000' 68-1680-057
3/8" ID vinyl tubing, bulk 100' 68-1680-058
3/8" ID vinyl tubing, bulk 500' 68-1680-059
1/4" Vinyl suction line accessory kit (required for 1/4" suction lines) 68-3700-006
3/8" Vinyl suction line accessory kit (required for 3/8" suction line) 68-3700-007
Weighted strainer only, 1/4", polypropylene body 60-1394-070
Low flow strainer only, 1/4", all stainless steel 60-2903-081
Weighted strainer only, 3/8", all stainless steel 60-1684-110
Weighted strainer only, 3/8", polypropylene body 60-1394-071
Low flow strainer only, 3/8", all stainless steel (not recommended for use with Teflon suction line) 60-2903-079
Weighted strainer only, 3/8", all plastic 60-3704-066
Extra Silastic pump tubing, bulk 15' length 68-1680-061
Extra Silastic pump tubing, bulk 50' length 68-1680-065

Power Sources

Model 913 High Capacity Power Pack (120-volt)	60-1684-088
Model 914 Battery-Backed Power Pack (120-volt)	60-3004-130
Model 923 High Capacity Power Pack (240-volt)	60-1684-093
Model 924 Battery-Backed Power Pack (240-volt)	60-3004-160
Model 934 Nickel-Cadmium Battery	60-1684-040
Model 946 Lead-Acid Battery	60-3004-106
Model 948 45-Amp-Hour Battery	68-3000-948
Portable 12-volt DC, 6-Amp Battery Charger for 948 Battery	341-0118-12
Model 961 Battery Charger (120-volt)	60-3004-059
Model 965 Five Station Battery Charger	68-3000-965
Model 954 Solar Panel Battery Charger	68-3000-027
Additional Solar Panel	68-3000-028
Solar Panel Cable (25-foot Length)	60-3004-097
Solar Panel "Y" Cable	60-3004-098
Solar Panel/Interrogator. Extension Cable	60-2544-028
Connect cable, for external 12 VDC power source; terminates in heavy duty battery clips	60-1394-023

Interfacing Equipment

Model 1640 Liquid Level Actuator	60-1644-000
Extra Instruction Manual, Model 1640	60-1644-009
Sampler to flow meter cable, 6-conductor	60-3004-107
Connector only, without cable, for use with non-Isco flow meters having an isolated contact closure proportional to flow	68-1680-060
Same as above, with 22' cable terminating in two wires	60-1394-077
Type A Interface (converts pulse duration flow meter output proportional to flow into pulses acceptable to Isco samplers)	60-1784-007
4-20 mA Sampler Input Interface (converts analog signal flow meter output as specified by user into pulses acceptable to Isco samplers)	60-3704-037
Isco Field Printer	60-3774-001
FLOWLINK3 Software	68-2544-043
SAMPLINK Sampler Interrogation Software	60-3774-043
Computer connect cable, 9-pin	60-2544-044
Computer connect cable, 25-pin	60-2544-040
Interrogator communications line kit - 9 pin (connects laptop computer with 9 pin serial port to sampler)	68-3770-001
Interrogator communications line kit - 25 pin (connects laptop computer with 25 pin serial port to sampler)	68-3770-002

Appendix B Display Index

Note: To access the display number, press the STOP key while the sampler displays the screen in question. The display numbers are available in the Standby and Program states.

Disp. No.	Display	Description
1	[PROGRAM, CONFIGURE] SAMPLER	This display appears after you press the ENTER/PROGRAM key while in standby. Select "PROGRAM" to access the program sequence. Select "CONFIGURE" to access the configure sequence.
3	----- COUNTS FORWARD	This informational display appears when you stop the pump with the STOP key after having pressed the PUMP FORWARD key. It reports the number of pump counts detected while the pump was in operation. Exit this display by pressing any key except STOP and ON/OFF.
3	----- COUNTS REVERSE	This informational display appears when you stop the pump with the STOP key after having pressed the PUMP REVERSE key. It reports the number of pump counts detected while the pump was in operation. Exit this display by pressing any key except STOP and ON/OFF.
10	[TIME, FLOW] PACED SAMPLING	This display appears after you select "PROGRAM" in Display #1. Select "TIME" for time-paced sampling, "FLOW" for flow-paced sampling.
11	[UNIFORM, NONUNIFORM] TIME INTERVALS	This display appears only in the extended programming mode and follows Display #10 when you have selected "TIME." Select "UNIFORM" for uniform time intervals, "NONUNIFORM" for nonuniform time intervals.
12	[TIME, FLOW, STORM] PACED SAMPLING	This display appears after you select "PROGRAM" in Display #1. It appears only when the sampler is configured for the extended programming mode and for 2, 4, 8, 12, or 24 bottles. Select "TIME" for time-paced sampling. Select "FLOW" for flow-paced sampling, and "STORM" for storm sampling.
14	[TIME, FLOW] SECOND BOTTLE GROUP	This display appears after you select "STORM" in Display #12. Use to select time- or flow-pacing for the second bottle group of a storm routine. Select "TIME" for time-pacing or "FLOW" for flow-pacing.
15	___ MINUTE DELAY TO FIRST GROUP SAMPLE	This display appears after you select "STORM" in Display #12. Enter the amount of time between the time the sampler is enabled and the first sample event for the first bottle group.
16	[DURING, AFTER] FIRST GROUP	This display is the first input display of the flow segment of a storm program. Select "DURING" to collect samples for the first and second bottle groups concurrently. Select "AFTER" to collect samples for the second bottle group after the sampler has filled the first bottle group.
17	___ MINUTE DELAY TO SECOND GROUP SAMPLE	This display appears after you select "STORM" in Display #12. Enter the amount of time between the time the sampler is enabled and the first sample event for the second bottle group.
20	MODIFY SEQUENCE? [YES, NO]	This display follows Display #11 when you have selected "NONUNIFORM." Select "YES" to modify the existing nonuniform intervals. Select "NO" to leave the nonuniform intervals unchanged.

Disp. No.	Display	Description
21	SAMPLE EVERY -- HOURS -- MINUTES	In the basic programming mode, this display appears after you have selected "TIME" in Display #10. In the extended programming mode, this display appears when you have selected "UNIFORM" in Display #11. Enter the uniform time interval. Two entries are required: the first entry sets the hours, the second sets the minutes.
22	SAMPLE EVERY ---- PULSES (1 - 9999)	This display follows Display #10 when you have selected "FLOW." Enter the flow pulse interval.
23	TAKE -- TIMED SAMPLE EVENTS (1 - MAX)	This display follows Display #15. Use this display to enter the number of timed sample events in a storm program.
24	SAMPLE INTERVALS OF -- MINUTES (1 - 99)	This display follows Display #23. Enter the time interval between time-paced sample events in a storm program.
25	TAKE --- SAMPLES (1 - *MAX*)	This display follows Display #20 when you have selected "YES" to modify the nonuniform time interval sequence. Enter the number of sample events to occur at nonuniform time intervals. *MAX* varies according to the bottle size entered in Display #223.
26	TAKE SAMPLES AT 1. *HH:MM* *DD-MMM*	This display follows Display #25. Enter the nonuniform clock times and dates for each sample event.
27	QUANTITY AT INTERVAL 1. -- AT --- MINUTES	Enter the number of samples to be taken at each interval. The total quantity entered will be one less than the total number of samples because the first sample, taken at the start time, counts as one. For example, if 19 samples are to be taken (the first 6 at 20 minute intervals, the next 9 at 30 minute intervals, and the remaining 3 at 45 minute intervals); first enter a quantity of 6 at 20 minutes, a quantity of 9 at 30 minutes, and then 3 at 45 minutes. **Figure 50.** shows a time line for the sampling routine.
30	-- BOTTLES PER SAMPLE EVENT (1 - *MAX*)	This display appears for samplers configured for 2, 4, 8, 12, and 24 bottles (*Display #'s 221 or 222*). It does not appear for samplers configured for a single bottle. In the basic programming mode, it follows Display #36. In the extended programming mode, it follows one of the four sample interval entry displays (*Display #'s 21, 22, 26, 27*). Enter the number of bottles to receive a sample volume at each sample event.

Figure 50. Time Line

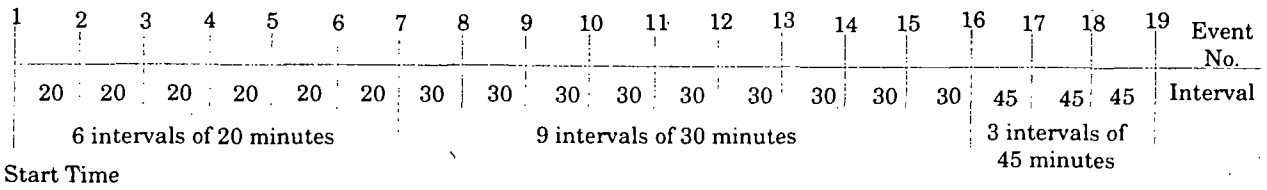

Disp. No.	Display	Description
31	-- SAMPLES PER BOTTLE (1 - *MAX*)	In the basic programming mode, this display appears when you have selected "SAMPLES PER BOTTLE" in Display #36. In the extended programming mode, it appears when the sampler is configured for 2, 4, 8, 12, or 24 bottles and there is only one bottle set. Enter the number of samples you want deposited in each bottle.
31	-- SAMPLES PER BOTTLE (1 - *MAX*)	In the basic programming mode, this display appears when you have selected "SAMPLES PER BOTTLE" in Display #36. In the extended programming mode, it appears when the sampler is configured for 2, 4, 8, 12, or 24 bottles and there is only one bottle set. Enter the number of samples you want deposited in each bottle.
35	MULTIPLEX SAMPLES? [YES, NO]	Select "YES" if you want the routine to perform bottles-per-sample or samples-per-bottle multiplexing. Select "NO" if you want the routine to perform sequential sampling.
36	[BOTTLES PER SAMPLE, SAMPLES PER BOTTLE]	This display appears when you have selected "YES" in Display #35. Select "BOTTLES PER SAMPLE" if you want the sampler to perform bottles-per-sample multiplexing. Select "SAMPLES PER BOTTLE" if you want the sampler to perform samples-per-bottle multiplexing.
40	CHANGE BOTTLES BASED ON [TIME, SAMPLES]	This display appears only in the extended programming mode when you have set the number of bottles per sample event to "1" in Display #30. Select "TIME" if you want the bottles to be switched after a specified period of time. Select "SAMPLES" if you want the bottles to be switched after a specified number of samples have been placed in a bottle. We recommend using "SAMPLES" for time-paced sampling routines.
41	CHANGE SETS BASED ON [TIME, SAMPLES/BTL]	This display appears when the number of bottles per sample event is set to a number greater than one and less than half the number of bottles in the tub. Select "TIME" to switch bottle sets after a specified period of time. Select "SAMPLES/BTL" to switch bottle sets after a specified number of samples have been placed in a set of bottles. We recommend using "SAMPLES/BTL" for time-paced sampling routines.
42	CHANGE BOTTLES EVERY -- HOURS -- MINUTES	This display appears after you select "TIME" in Display #40. Enter the amount of time each bottle is to receive samples.
43	CHANGE SETS EVERY -- HOURS -- MINUTES	This display appears after you select "TIME" in Display #41. Enter the amount of time each bottle set is to receive samples.
44	CHANGE BOTTLES EVERY -- SAMPLES	This display appears after you select "SAMPLES" in Display #40. Enter the number of samples each bottle is to receive.
45	CHANGE SETS EVERY -- SAMPLES	This display appears after you select "SAMPLES/BTL" in Display #41. Enter the number of samples each bottle set is to receive.
46	FIRST BOTTLE CHANGE AT *HH:MM MM/DD*	This display appears when you have selected "YES" in Display #95. Enter the time of the first bottle switch. The remaining bottle changes will occur according to settings entered in Display #42. The display will also appear if you have started the routine after the programmed switch time.

Disp. No.	Display	Description
47	FIRST SET CHANGE AT *HH:MM MM/DD*	This display appears when you have selected "YES" in Display #95. Enter the time of the first bottle set switch. The remaining bottle set changes will occur according to settings entered in Display #43. The display will also appear if you have started the routine after the programmed switch time.
48	SAMPLE CONTINUOUSLY? [YES, NO]	This display appears when the sampler is configured for 2, 4, 8, 12, or 24 bottles, under uniform time, flow, or nonuniform time modes of sample pacing. Select "YES" to sample continuously. Select "NO" to stop the sampling routine after the sampler fills the last set of bottles.
50	SAMPLE VOLUMES OF --- ml EACH (10 - *MAX*)	Enter the size of the sample volume. *MAX* will vary according to the number of samples per bottle and bottle size.
60	---COMPOSITE SAMPLES (0 - MAX)	This display appears when you have configures the controller for composite sampling by selecting "1" in Display #'221 or 222. Enter the number of composite samples. An entry of "0) will instruct the sampler to take samples until a float shutoff terminates the sampling routine.
70	SUCTION HEAD OF --FEET (1 - MAX)	This display appears when you have selected "YES" in Display #242 or have selected "Disable" in Display #240. Enter the measured suction head. *MAX* will be the smaller of the suction line length or "20".
80	CALIBRATE SAMPLE VOLUME? [YES, NO]	This display appears in the program sequence when you have selected "ENABLE" in Display #290. Select "YES" to use the calibration sequence, "NO" to omit the calibration sequence.
81	PRESS MANUAL SAMPLE KEY WHEN READY . . .	This display is part of the calibration sequence. Press the MANUAL SAMPLE key when a collection bottle is underneath the distributor and the suction line is in place.
82	--- ml VOLUME DELIVERED	This display is part of the calibration sequence. When it first appears, it reports the programmed sample volume. If the measured volume differs from the reported volume, enter the measured volume here.
83	---ml! ARE YOU SURE? [YES, NO]	This display is part of the calibration sequence and appears if the measured volume and the programmed volume differ by a factor of two or more. Select "YES" to confirm the number entered in Display #82. Select "NO" to return to Display #82.
90	ENTER START TIME? [YES, NO]	Select "YES" to enter a start time. Select "NO" to begin the sampling routine according to the delay set in Display #310.
91	TAKE FIRST SAMPLE AT HH:MM DD-MMM	This display appears when you have selected "YES" in Display #90. Enter the start time and date for the first sample event. This display will also appear if you have initiated the routine after a programmed start time so that you can reprogram the start time.
92	START FLOW COUNT AT *HH:MM DD-MM*	This display appears when you have selected "YES" in Display #90. Enter the start time and date for the flow pulse countdown. This display will also appear if you have initiated the routine after a programmed start time so that you can reprogram the start time.

Disp. No.	Display	Description
93	STORM ENABLED AFTER HH:MM DD-MM	This display is the last display of the storm branch. It appears when you select "YES" in display #90. Enter the start time for the storm sampling routine. The sampler will disregard enable or disable signals from the flow meter until the start time you enter here.
95	ENTER FIRST SWITCH TIME? [YES, NO]	This display appears when you have selected "TIME" in either Display #40 or 41. Select "YES" if you want to specify a clock time for the first bottle or bottle set switch. Select "NO" if you want to begin the switch interval at the routine's start time.
100	-- STOP or RESUME TIMES (0 - 24)	This display appears when you have selected "ENABLE" in Display #300. Enter the number of stop and resume times.
101	STOP SAMPLING AT 1.*HH:MMDD-MMM*	This display appears when the setting in Display #100 is greater than zero. Enter the appropriate stop time.
102	RESUME SAMPLING AT 1.*HH:MMDD-MMM*	This display appears when the setting in Display #100 is greater than one. It follows Display #101. Enter the appropriate resume time.
110	MAX FLOW INTERVAL OF -- HOURS, -- MINUTES	This display follows Display #22. Enter the maximum amount of time you want between flow-paced sample events in a storm program. If the time between flow pulses exceeds this entry, the sampler will terminate the sampling routine.
140	[START, RESUME] SAMPLING PROGRAM	This display appears when a routine is halted and you press the START SAMPLING key. Select "START" to start the sampling program at the beginning, "RESUME" to continue the sampling program at the point at which it was halted.
141	START SAMPLING AT BOTTLE -- (1 - *MAX*)	This display appears after you start a routine and the sampler is configured for 2, 4, 8, 12, or 24 bottles. Enter the starting bottle location for the sampling routine. *MAX* varies according to number of bottles (Display #'s 221 or 222) and the number of bottles per sample event (Display #30).
142	CHANGE START TIME? [YES, NO]	This display appears when you have started a routine after the programmed start time. Select "YES" to enter a new start time. Select "NO" to start the routine immediately; some sample events may be missed or late.
143	CHANGE SWITCH TIME? [YES, NO]	This display appears when you have started a routine after the programmed first switch time. Select "YES" to enter a new switch time. Selecting "NO" will switch one bottle set and start the routine.
148	[REVIEW, PRINT] PROGRAM INFORMATION	This display appears after you press the DISPLAY STATUS key. Select "REVIEW" to view the summary of the current program settings and for sampling results. Select "PRINT" to send the current status, program settings, and sampling results to an Isco Field printer. The printed results include data for sample events completed at the time you pressed the DISPLAY STATUS key.
149	PRINT PROGRAM [NO, SETTINGS, RESULTS]	This display appears after you select "Print" in Display #148. Select "NO" to return to standby. Select "Settings" to print the settings report. Select "RESULTS" to print the results report.

Disp. No.	Display	Description
150	REVIEW PROGRAM [NO, SETTINGS, RESULTS]	This display appears after you select "REVIEW" in display #148. Select "NO" to return to the previous operating state. Select "SETTINGS" to view the summary of the current program settings. Select "RESULTS" to view the sampling results for sample events completed at the time you pressed the DISPLAY STATUS key.
151	*SETTINGS DISPLAYS*	Display #151 is used to identify the displays used to summarize the current program settings which appear when you select "SETTINGS" in Display #150.
152	*RESULTS DISPLAYS*	Display #152 is used to identify sampling results displays which appear when you select "RESULTS" in Display #150.
200	SELECT OPTION (← →) *NAME OF CONFIGURE OPTION*	Display #200 is used to identify the displays which locate each configure option in the configure sequence. Press ENTER/PROGRAM to access the input displays for each option. Use the LEFT ARROW and the RIGHT ARROW keys to move through the options.
210	HH:MM DD/MM/YY *HH:MM DD/MM/YY*	Set Clock configure option. Enter the time and date to set the controller's clock. Use military time. Enter two digits each for the day (DD), month (MM), and year (YY).
220	[PORTABLE, REFRIG.] SAMPLER	Bottles and Sizes configure option. Select "PORTABLE" when you are using a 3700 Portable Sampler. Select "REFRIG." when you are using a 3700 refrigerated sampler.
221	[1, 2, 4, 8, 12, 24] BOTTLES	Bottles and Sizes configure option. This display appears when you have selected "REFRIG." in Display #220. Select the number of bottles in the bottle base.
222	[1, 4, 12, 24] BOTTLES	Bottles and Sizes configure option. This display appears when you have selected "PORTABLE" in Display #220. Select the number of bottles in the base.
223	BOTTLE VOLUME IS ----- ml	Bottles and Sizes configure option. Enter the bottle volume in milliliters.
224	---- ml . . . ARE YOU SURE? [YES, NO]	Bottles and Sizes configure option. This display appears when you have entered a bottle volume, in Display #223, that exceeds a standard Isco bottle size.
230	SUCTION LINE ID IS [1/4, 3/8] INCH	Suction Line configure option. Select "1/4" if you are using 1/4 inch suction line, "3/8" if you are using 3/8 inch suction line.
231	SUCTION LINE IS [VINYL, TEFLON]	Suction Line configure option. This display appears when you have selected "3/8" in Display #230. Select "VINYL" if you are using vinyl suction line, "TEFLON" if you are using Teflon suction line.
232	SUCTION LINE LENGTH IS -- FEET (3 - 99)	Suction Line configure option. Enter the length of the suction line. The length should not include the tube coupling or the strainer.
240	[ENABLE, DISABLE] LIQUID DETECTOR	Liquid Detector configure option. Select "ENABLE" to turn the Liquid Detector on, "DISABLE" to turn the Liquid Detector off. If you turn the detector off, you will be required to enter the suction head (Display #70) in the program sequence.

Disp. No.	Display	Description
241	- RINSE CYCLES (0 - 3)	Liquid Detector configure option. This display appears when you have selected "ENABLE" in Display #240. Enter the number of rinse cycles. Rinse cycles condition the suction line to reduce cross contamination.
242	ENTER HEAD MANUALLY? [YES, NO]	Liquid Detector configure option. This display appears when you have selected "ENABLE" in Display #240. Select "YES" to add the suction head setting (Display #70) to the program sequence. Select "NO" to omit the setting.
243	RETRY UP TO - TIMES WHEN SAMPLING (0 - 3)	Liquid Detector configure option. This display appears when you have selected "ENABLE" in Display #240. Enter the number of retries: the number of times the sampler will try to detect the presence of liquid for each sample event.
250	[BASIC, EXTENDED] PROGRAMMING MODE	Programming Mode configure option. Select "BASIC" if you want to use the basic programming mode. Select "EXTENDED" if you want to use the extended programming mode.
255	LOAD PROGRAM [#1, #2, #3, NONE]	Load Stored Program configure option. Select the sampling program you want to use. Select "NONE" to exit the display without loading a program.
260	SAVE PROGRAM AS [#1, #2, #3, NONE]	Save Current Program configure option. Select the number you want to use to identify the current program with when saved. Select "NONE" to exit the display without saving a program.
270	TAKE SAMPLE AT START TIME? [YES, NO]	Flow Mode Sampling configure option. This setting affects flow-paced sampling routines. Select "YES" to take the first sample at the start time, "NO" to take the first sample at the end of the first flow pulse interval.
271	TAKE SAMPLE AT TIME SWITCH? [YES, NO]	Flow Mode Sampling configure option. This setting affects flow-paced, time-switched sampling routines only. Select "YES" to take a sample at switch times. Select "NO" if no sample event is desired at the switch times.
280	ENTER INTERVALS IN [CLOCK TIME, MINUTES]	Nonuniform Time configure option. Select "CLOCK TIME" to enter the nonuniform time intervals as clock times (Display #26). Select "MINUTES" to set the nonuniform intervals in minutes (Display #27).
290	[ENABLE, DISABLE] CALIBRATE SAMPLER	Calibrate Sampler configure option. Select "ENABLE" to add calibration displays to the program sequence. Select "DISABLE" to omit the calibration displays.
300	[ENABLE, DISABLE] SAMPLING STOP/RESUME	Sampling Stop/Resume configure option. Select "ENABLE" to add the Sampling Stop and Resume settings to the program sequence. Select "DISABLE" to omit the settings.
301	SAMPLE AT STOP? [YES, NO]	Sampling Stop/Resume configure option. This display appears when you have selected "ENABLE" in Display #300. Select "YES" to take a sample at stop times. Select "NO" if no sample event is desired at the stop times.
302	SAMPLE AT RESUME? [YES, NO]	Sampling Stop/Resume configure option. This display appears when you have selected "ENABLE" in Display #300. Select "YES" to take a sample at the resume times. Select "NO" if no sample event is desired at the resume times.

Disp. No.	Display	Description
310	---- MINUTE DELAY TO START (0 - 9999)	Start Time Delay configure option. Enter the amount of time, in minutes, you want to delay the start time. This entry affects programs that do not have a programmed start time.
321	SAMPLE UPON DISABLE? [YES, NO]	Enable Pin configure option. Select "YES" to take a sample at the time the sampler becomes disabled. Select "NO" if no sample event is desired when the sampler becomes disabled.
322	SAMPLE UPON ENABLE? [YES, NO]	Enable Pin configure option. Select "YES" to take a sample at the time the sampler becomes enabled; i.e., ceases to receive an inhibit signal from a Flow Meter or a Liquid Level Actuator. Note: No sample will be taken if the enable signal is used to initiate the start time delay countdown. Select "NO" if no sample event is desired when the sampler becomes enabled.
323	RESET SAMPLE INTERVAL? [YES, NO]	Enable Pin configure option. Select "YES" to restart the sample interval countdown at the time the sampler becomes enabled. If "NO" is selected, the interval countdown is determined by the setting in Display #324.
324	INHIBIT COUNTDOWN? [YES, NO]	Enable Pin configure option. This display appears when "NO" was selected in Display #323. Select "YES" to freeze the sample interval when the sampler becomes disabled. The interval countdown will continue from the point at which it was stopped when the sampler is enabled. Select "NO" to allow the sample interval countdown to continue while the sampler is disabled.
330	[CONTINUOUS SIGNAL, PULSE]	Event Mark configure option. Select "CONTINUOUS SIGNAL" to send a variable duration event mark signal out pin E of the flow meter connector. Select "PULSE" to send a 3 second event mark signal.
331	DURING [PUMP CYCLE, FWD PUMPING ONLY]	Event Mark configure option. This setting appears when you have selected "CONTINUOUS SIGNAL" in Display #330. Select "PUMP CYCLE" to transmit the event mark signal during the entire pump cycle, including any programmed rinses and retries. Select "FWD PUMPING ONLY" to send the signal when the pump is delivering a sample volume only.
332	AT THE BEGINNING OF [PURGE, FWD PUMPING]	Event Mark configure option. This setting appears when you have selected "PULSE" in Display #330. Select "PURGE" to transmit an event mark signal to a flow meter at the beginning of the pre-sample purge. Select "FWD PUMPING" to transmit a signal when the pump switches forward to deliver the sample volume.
340	--- PRE-SAMPLE COUNTS (0 - 9999)	Purge Counts configure option. Enter the number of pre-sample pump counts needed to purge the suction line. This value is set to 150 when the controller is re-initialized.
341	--- POST-SAMPLE COUNTS (0 - 9999)	Purge Counts configure option. Enter the number of post-sample pump counts needed to purge the suction line. The number that initially appears in this display is derived by the controller from the suction line ID and length entered in Display #'s 230 and 232.
350	------ PUMP COUNTS, WARNING AT ------	Tubing Life configure option. This informational display is used to communicate the number of pump counts elapsed since the last reset and the number of counts required to trigger the Pump Tubing Warning. Exit this display by pressing any key.

Disp. No.	Display	Description
351	RESET PUMP COUNTER? [YES, NO]	Tubing Life configure option. After changing the pump tube, select "YES" to reset the pump counter to zero. Select "NO" to leave the counter unchanged.
352	------ PUMP COUNTS TO WARNING	Tubing Life configure option. Enter the number of pump counts required to trigger the pump count warning if the factory setting is not suitable. This value is set to 500,000 when the controller is re-initialized.
360	[ENABLE, DISABLE] PROGRAM LOCK	Program Lock configure option. Select "ENABLE" to turn the program lock on. If you enable the program lock, input displays are protected by a pass-number: 3700. The controller will not allow you to make any changes to a program or configure sequence setting until you enter the pass-number when requested. Select "DISABLE" to turn the program lock off.
365	SAMPLER ID NUMBER IS ---------	Sampler ID configure option. Enter the sampler ID (identification) here. The sampler will accept up to ten characters, including periods (press RESUME SAMPLING), dashes (press MANUAL SAMPLE), and spaces (press START SAMPLING).
370	TEST DISTRIBUTOR? [YES, NO]	Run Diagnostics configure option. Select "YES" to run the distributor test. Select "NO" to skip the test. The distributor is tested by moving it to position 24 then back to position 1.
371	RE-INITIALIZE? [YES, NO]	Run Diagnostics configure option. Select "YES" to re-initialize the controller: the entire RAM – with the exception of the configure option settings for current pump count total, number of bottles, bottle size, suction line length, and sampler ID – will be re-initialized to factory settings. Select "NO" the leave the settings unchanged.

Appendix C Calculating Flow Increment Between Samples

Calculating Flow Increment Between Samples

The 3700FR will accept flow proportional inputs of a certain specific nature from an external flow meter. These electronic flow input signals are transmitted to the sampler at fixed increments of total flow, for example every 10,000 gallons. That is, each time 10,000 gallons of liquid has flowed past the flow meter, a signal is sent to the sampler, which registers it as a single flow pulse. The Sampler can be programmed to totalize any number of flow pulses from 1 to 9999 before a sampling event is initiated. For example, if the sampler were programmed to totalize 5 flow pulses and each flow pulse represented 10,000 gallons of total flow, a sample would be collected each time 50,000 gallons (5 flow pulses of 10,000 gallons each) had passed the flow meter.

Time Interval Known

If the desired average time interval between individual samples is known, the flow increment between samples can be determined by calculating how much flow (based on the average flow rate) occurs during that time interval. For example, assume that the average flow is 2.5 MGD and it is desired to collect a sample every 30 minutes. The flow increment between samples is calculated:

2.5 MGD = 2,500,000 gal/day.

2,500,000 gal/day × 1 day/24 hrs × 1 hr/60 min = 1736 gal/min.

1736 gal/min × 30 min/sample = 52,080 gal/sample.

Thus, the desired flow increment between samples is approximately 52,000 gallons.

Number of Samples Known

Alternatively, if the total number of samples to be collected over the total sampling period is known, the flow increment between samples can be determined by calculating how much total flow will occur during the sampling period, and dividing this by the total number of samples to be collected. For example, assume that the average flow is 1.75 MGD, that the composite sampling period is 2 days, and that it is desired to collect 100 individual samples. The flow increment between samples is calculated:

1.75 MGD = 1,750,000 gal/day.

1,750,000 gal/day × 2 days = 3,500,000 gallons.

3,500,000 gal ÷ 100 samples = 35,000 gal/sample.

Thus, the desired flow increment between samples is approximately 35,000 gallons.

Once the desired flow increment between samples is known, the number of flow pulses to be programmed into the sampler may be calculated, assuming that the volume of the flow pulses from the flow meter is known. The number of flow pulses is calculated by dividing the flow increment between samples by the volume of each flow pulse. Using the first example above, the flow increment between samples was calculated as 52,000 gallons; assume that each flow pulse represents 10,000 gallons of flow. The number of flow pulses to be programmed into the sampler is calculated:

52,000 gal ÷ 10,000 gal/flow pulse = 5.2 flow pulses.

Rounding this to an even number results in 5 flow pulses to be programmed into the sampler. This in turn results in a flow increment between samples of 50,000 gallons (5 flow pulses × 10,000 gallons/flow pulse).

To calculate the total number of samples to be collected, three quantities must be known: the average flow rate, the flow increment between samples (calculated above), and the total time over which the composite sample is to be collected. The total number of samples to be collected is determined by first calculating the total flow volume over the sampling period, and then dividing this by the flow increment between samples. For example, assume that the average flow is 2.5 MGD, the flow increment between samples is 50,000 gallons, and the composite sample is to be collected over a 24 hour period. The total flow volume over a 24 hour period is:

2.5 MGD = 2,500,000 gal/day.

2,500,000 gal/day × 1 day = 2,500,000 gallons.

The total number of samples to be collected in this 24 hour period is then calculated:

2,500,000 gal ÷ 50,000 gal/samples = 50 samples.

Thus, based on an average flow of 2.5 MGD, 50 samples will be collected.

To calculate the volume of each individual sample, the volume of the composite sample container being used and the total number of samples to be collected (calculated above) must be known. Isco provides two different size composite sample containers for use with the 3700FR:

2.5 gallon = 9,400 ml.

4 gallon polyethylene = 15000 ml.

The individual sample volume is calculated by simply dividing the volume of the composite sample container being used by the total number of samples to be collected. For example, assume that a 2.5 gallon plastic container is being used, and that a total of 50 samples are to be collected in it. The individual sample volume is then calculated:

9400 ml ÷ 50 samples = 188 ml.

Thus, a sample volume of 188 ml will result in the desired composite sample. Because of the basic uncertainty of the delivered sample volume exactly matching the programmed nominal sample volume and the 10 ml sample repeatability, it is good practice to select a nominal sample volume which is slightly smaller than the calculated sample volume. This is to prevent overfilling of the sample container. In the example, an individual nominal sample volume of 125 ml might be a prudent choice. For critical applications, calibration of the sample volume can be used. It is important to select an individual sample volume which will not result in an overfilled sample container under worst-case conditions.

The nominal volume of the composite sample may be calculated by multiplying the programmed nominal sample volume by the total number of samples to be collected. In the example:

125 ml/sample × 50 samples = 6,250 ml.

This calculated total volume may vary from the actual total volume because of variations in the actual volume of each individual sample. The total time needed to collect the 50 individual samples may vary from the desired 24 hour period because of variations in the average flow rate from the 2.5 MGD figure used in these calculations.

Appendix D Glossary

Bottle set - A bottle set is the collection of bottles defined by the number of bottles per sample in Index #30. For example, if the bottles per sample event setting is "4," a 24 bottle tub would contain six bottle sets. A bottle set can consist of only one bottle.

Bottles per sample - Bottles per sample is the number of bottles receiving sample volumes at each sample event.

Composite sampling - Composite sampling is a process in which multiple sample volumes are placed in bottle sets. Typically, composite sampling uses a single container. A composite sample represents an average of the characteristics of the flow stream for the elapsed time of sampling.

Controller - The controller is a collection of electronic components which governs the actions of the sampler. It includes the microprocessor, RAM (Random Access Memory), ROM (Read Only Memory) and its imbedded software, the LCD (Liquid Crystal Display), and the keypad.

Cross contamination - Cross contamination occurs when portions of previous samples are mixed with the current sample. For example, cross contamination will result when residual amounts of sample remain in the suction line or pump tube from a previous sample event.

Event mark - An event mark is a signal sent by the sampler to a flow meter or other device at each sample event. Each time an event mark pulse is received by the flow meter, a mark is placed on the flow meter's recording chart. Marking the recording chart cross-references the charted flow with the sample events.

Multiplexing - There are two types of multiplexing: samples per bottle and bottles per sample. In samples per bottle multiplexing, a bottle receives samples from more than one sample event. In bottles per sample multiplexing, equal sample volumes are placed in more than one bottle at each sample event.

Multiple bottle compositing - A type of composite sampling where samples per bottle multiplexing and bottles per sample multiplexing are combined to create multiple composite samples. Multiple bottle compositing allows you to use the sequential bottle sets to acquire composite samples.

Post-sample purge - Post-sample purge refers to the suction line purge that follows the delivery of the sample volume(s). It is also called "post-purge."

Pre-sample purge - Pre-sample purge refers to the suction line purge that precedes the delivery of the sample volume(s). It is also called "pre-purge."

Real time clock - A clock which can be set to the actual time and date.

Sample event - A sample event consists of the complete sampling cycle resulting in the collection and distribution of one or more equal sample volumes. A sample event includes pre-sample and post-sample purges, line rinses, liquid detection retries, and deliveries of sample volumes. No more than one sample volume is placed in any one bottle during a sample event.

Sample volume - The sample volume is the discrete, programmed amount of sample delivered to each bottle. A single sample event may deliver several sample volumes.

Samples per bottle - Samples per bottle is the number of discrete sample volumes placed in each bottle.

Sampling program - See sampling routine.

Sampling routine - A sampling routine, also called a sampling program, is the process of taking samples according to the program settings you enter when programming and configuring the controller. The program settings define the sample pacing, distribution, volume, and key clock times.

Selection - A selection is represented by a blinking word or number in an input display. The blinking selection indicates the current choice or value. Selections are accepted and stored by pressing the ENTER/PROGRAM key.

Sequential sampling - Sequential sampling is the process in which discrete, programmed sample volumes are placed in separate, identifiable sample bottles. Sequential sampling represents a series of "snap shots" of the flow stream.

Suction head - Suction head is the vertical distance from the surface of the flow stream to the pump inlet.

One year, limited
Warranty

Please read before instrument setup.

ISCO INSTRUMENTS HAVE A ONE YEAR LIMITED WARRANTY COVERING BOTH PARTS AND LABOR. Should any instrument become defective due to faulty parts or workmanship within the guarantee period, it will be repaired at the factory at no charge to the customer. Isco will pay **SURFACE** transportation charges both ways within the contiguous United States if the instrument proves to be defective **WITHIN 30 DAYS** from the date of shipment. Throughout the remainder of the guarantee period, the customer will pay transportation charges to return the defective instrument to Isco, and Isco will pay **SURFACE** transportation charges to return the repaired instrument to the customer. Isco will not pay air freight or packing and crating charges. The warranty period begins with the shipping date of the instrument to the original purchaser. All requests for warranty service must be received within the warranty period.

At the convenience of Isco, Isco may reimburse the customer to have the repairs performed by a qualified technician in the customer's locality. Authorization must be granted prior to the time any repair is performed.

ISCO'S EXCLUSIVE LIABILITY IS LIMITED TO REPAIR OR REPLACEMENT OF DEFECTIVE INSTRUMENTS. UNDER NO CIRCUMSTANCES IS ISCO LIABLE FOR CONSEQUENTIAL DAMAGES. THIS WARRANTY IS EXPRESSLY IN LIEU OF ALL OTHER WARRANTIES AND OBLIGATIONS AND ISCO SPECIFICALLY DISCLAIMS ANY WARRANTY OF MERCHANTABILITY OR FITNESS FOR A PARTICULAR PURPOSE. The following are not covered by this warranty: Expendable items such as charts, pens, suction and pump tubing and glassware; damage due to corrosion, abuse, accident or alteration; and suitability for any specific purpose.

OUTSIDE THE WARRANTY PERIOD, REPLACEMENT PARTS AND REPAIR LABOR ARE GUARANTEED FOR 90 DAYS.

The warrantor is Isco, Inc., Lincoln, Nebraska, U.S.A.

INSTRUCTIONS FOR RETURNING INSTRUMENTS FOR REPAIR.

Before returning any instrument for repair, call or write our service department for instructions. Simple difficulties can often be diagnosed over the phone.

Pack the instruments carefully, preferably in its original carton, and ship to the attention of the service department. U.P.S. or motor freight is generally the best method except for very small, non-fragile items which can be sent by insured parcel post. **BE SURE TO ENCLOSE A NOTE EXPLAINING THE DEFECT AND A PURCHASE ORDER AUTHORIZING THE REPAIR.**

Return equipment to:
Isco, Inc.-Environmental Division
531 Westgate Blvd.
Lincoln, NE 68528-1586, U.S.A.
Mailing Address: P.O. Box 82531, Lincoln, NE 68501-2531, U.S.A.
Phone: (402) 474-2233 or (800) 228-4373 (U.S.A. and Canada)
FAX: (402) 474-6685

ISCO®

June, 1995

POWER PRODUCTS GUIDE

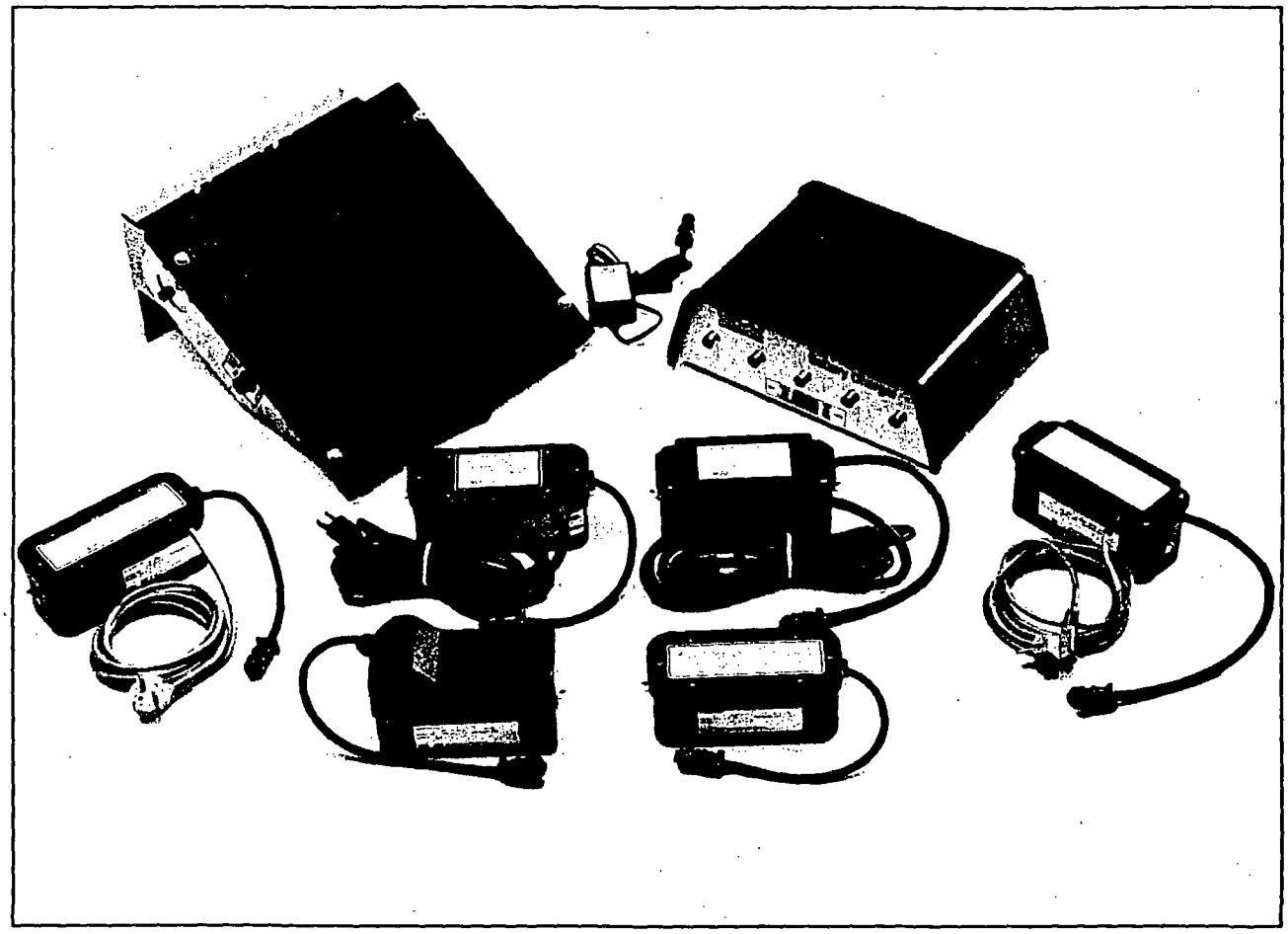

Part #60-9003-092

COPYRIGHT 1993, 1994, 1995, 1996

ISSUED: June 1993
Revision E, May 24, 1995

531 Westgate Boulevard
Lincoln, Nebraska, 68528-1586 USA
Phone: (402) 474-2233
Toll Free: (800) 228-4373 (U.S.A. & Canada).
FAX: (402) 474-6685

ISCO®

FOREWORD

This instruction manual is designed to help you gain a thorough understanding of the operation of the equipment. Isco recommends that you read this manual completely before placing the equipment in service.

Although Isco designs reliability into all equipment, there is always the possibility of a malfunction occurring. You can use this manual to help in diagnosing and repairing the malfunction, if possible.

If the malfunction persists, call or write the Isco Customer Service Department for assistance. (Address: Isco Inc., Environmental Division, 531 Westgate Boulevard, Lincoln, NE 68528-1586; Phone: [800] 228-4373 or [402] 474-2233 Fax: [402] 474-6685.) Simple difficulties can often be diagnosed over the phone. If it is necessary to return the equipment to the factory for service, please follow the shipping instructions provided by the Customer Service Department, including the use of the **Return Authorization Number** specified. **Be sure to include a note describing the malfunction.** This will aid in the prompt repair and return of the equipment.

Isco welcomes suggestions that would improve the information presented in this manual or enhance the operation of the equipment itself.

Table of Contents

Introduction 1

1. Batteries 1

Model 934 Nickel-Cadmium Battery 3
Model 946 Lead-Acid Battery 6
Model 948 Lead-Acid Battery 7
Use of Other Types of Batteries 8

2. Batteries for the Flow Loggers 9

Model 947 Lead-Acid Battery 10
Alkaline "Lantern" Battery 10
Flow Loggers - External Power Sources 10

3. Isco Battery Chargers and Power Packs 11

Model 961 Battery Charger 11
Model 913 and 923 High Capacity Power Packs 11
Models 914 and 924 Battery-Backed Power Packs 11
Model 965 Five Station Battery Charger 12
Model 954 Solar Panel Charger 12
Obsolete Power Supplies 12
Normal Speed Power Pack (Obsolete) 13
Super Speed Power Pack (Obsolete) 13
Models 911 and 921 13
Models 912 and 922 13
Five Station Battery Charger (Original Version) 13

Part Numbers for the Power Products 14

List of Illustrations

Model 934 Nickel-Cadmium Battery 1
Model 946 Lead-Acid Battery 1
Fuse and Cable Replacement 6
Model 948 Battery 8
Model 948 Battery Charger 8
Model 947 Flow Logger Battery 10
Flow Logger Alkaline Battery 10
Model 961 Wall Charger for Nickel-Cadmium Batteries 11
Model 913 High Capacity Power Pack 11
Model 914 Battery-Backed Power Pack 11
Five Station Battery Charger 12
Model 954 Solar Panel Charger 12

Introduction

This guide provides information about power sources available for Isco products. Isco offers rechargeable lead-acid and nickel-cadmium batteries, and also makes power supplies that convert 120 volt AC power to 12 volts DC. This guide provides information about the rechargeable batteries and descriptions of the AC power packs. Some power products have manuals of their own. Those products are shipped with their own manuals. Products that have their own manuals are discussed only briefly here. We encourage your input on ways we can improve this guide.

Note Model Numbers

Isco has assigned **model numbers** to all power products. All power products will now have three-digit model numbers starting with **9XX.**

• The **910 series** are 120-volt high capacity power packs and battery-backed power packs:

Model 913—High Capacity Power Pack, 120 VAC
Model 914—Battery Backed Power Pack, 120 VAC

• The **920 series** are 240-volt high capacity power packs and battery-backed power packs.

Model 923—High Capacity Power Pack, 240V
Model 924—Battery Backed Power Pack, 240V

• The **930 series** are rechargeable nickel-cadmium batteries.

Model 934—Nickel-Cadmium Battery 12V, 4.0 Ah

Note that "Ah" stands for ampere-hours, the standard rating that battery manufacturers use to describe battery capacity. (See page 2.)

• The **940 series** are sealed rechargeable lead-acid batteries.

Model 946—Lead-Acid Battery 12V, 6.5 Ah
Model 947—Lead-Acid Battery 12V, 6.5 Ah (for the 4100 Series Flow Loggers)

Model 948—Lead-Acid Battery 12V, 45 Ah

• The **950 series** are solar panels used to charge Isco lead-acid batteries.

Model 954—Solar Panel Battery Charger

• The **960 series** are battery chargers.

Model 961—Wall Charger for Nickel-Cadmium Batteries - 120 VAC, 400 mA output
Model 965—Five Station Battery Charger - for one to five lead-acid or nickel-cadmium batteries, 120 or 240 VAC

1. Batteries

General Information

Isco offers two different batteries for use with its equipment. Both have advantages and disadvantages. The choice is ultimately up to you. The most common battery is the ***Isco Model 934 Nickel-Cadmium Battery.*** Each cell in the nickel-cadmium battery provides 1.2 VDC and has a capacity of 4 ampere-hours (Ah). It takes ten of these cells connected in series to make a battery of 12 volts. The cells are packaged in an environmentally-sealed plastic housing, supplied with a cable and two-pin M/S connector, and provide 12 volts DC.

Figure 1. Model 934 Nickel-Cadmium Battery

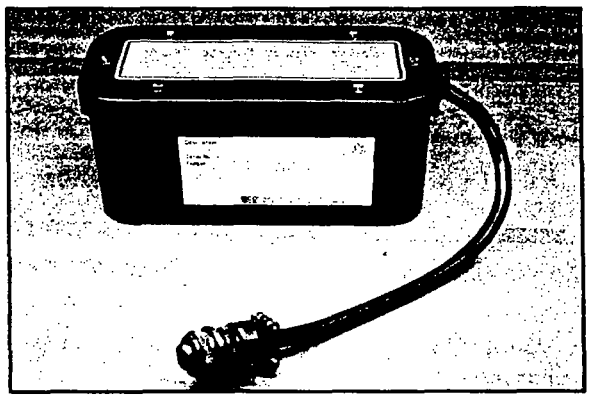

Also available is the ***Isco Model 946 Lead-Acid Battery.*** This battery is a six-cell, plastic-cased, 6.5 Ah, gelled-electrolyte type, supplied with a connector. It delivers 12 volts. A lead-acid cell provides 2.2 volts, so six are required for 12 volts. These batteries are popularly known as ***gel-cells.*** Both batteries fit inside of or on top of Isco equipment and fasten to the equipment with rubber draw catches.

Figure 2. Model 946 Lead-Acid Battery

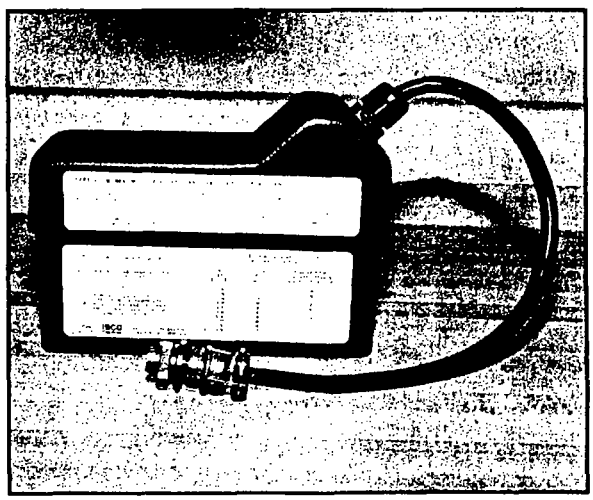

Environmental Responsibility for Battery Recycling and Disposal

Batteries of all types are a significant source of toxic and environmentally hazardous materials, primarily heavy metals. The disposal of lead-acid, nickel-cadmium, and alkaline batteries in landfills every year represents a growing threat to the environment. At this time, legislation requiring the recycling and/or proper disposal of rechargeable batteries is under consideration or has been passed in several states.

- *Isco expects that most, if not all states will pass similar legislation in the near future.*

Because we manufacture products containing batteries and because of the unsettled state of the laws at present, we are making the following statements about products containing batteries and providing appropriate labeling for those products.

- *Because the laws vary from state to state, it is your responsibility to find out how to recycle or dispose of these products properly.*

To conform with these changes, since July 1, 1993, we have labeled all equipment containing batteries with the three-arrow recycling logo and the type of battery (*Ni-Cd* [nickel-cadmium] or *Pb* [lead-acid]).

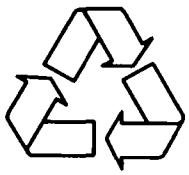

Ni-Cd

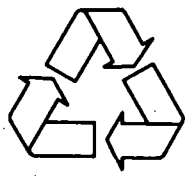

Pb

ATTENTION

"The product you have purchased contains a rechargeable battery. This battery is recyclable. Disposal of this battery at the end of its useful life in the municipal waste stream may be illegal, depending on the laws of your state or locality. Check with solid waste officials in your area for information on recycling options or proper disposal."

Battery Ratings (Ampere-Hours)

Battery manufacturers rate the capacity of batteries in *ampere-hours,* (availability of current over time). Typically, manufacturers rate battery capacity at a certain current over a specific period of time. The product of this value is the *ampere-hour rating* of the battery.

Typical ratings for the discharge of nickel-cadmium batteries are over ***10 hours*** and for lead-acid batteries are over ***20 hours.*** As a result, a rating of 4 or 6.5 ampere-hours for a battery does ***not*** mean you can draw 4 or 6.5 amperes from the battery for one hour. The actual amount at the one-hour rate is typically ***one-half*** the "rated" capacity of the battery, or less. To determine the actual battery rating, you must take the nominal capacity (**4 or 6.5 ampere-hours**) and divide it by **10** or **20**, depending on the battery type.

In the case of the Model 934 Nickel-Cadmium Battery, you use a figure of **0.4**, and for the Model 946 Lead-Acid Battery you will use **0.325**. Customarily, currents below 1.0 ampere are expressed in milliamperes (**mA**). This means you can expect to discharge the nickel-cadmium battery at **400 mA** for 10 hours. You would expect to discharge the lead-acid battery at **325 mA** for 20 hours.

Battery manufacturers provide curves in their literature showing the discharge rates in percentages of "**C,**" which stands for **rated capacity in ampere-hours (Ah)**. If you discharge the battery at rates greater than the 20-hour rate, you can draw more current, but for a ***considerably*** shorter time; that is, the value of time multiplied by current will amount to ***much less*** than "C." For more than 20 hours, you can draw less current for a longer time.

For times beyond 20 hours, the product of current and time will amount to ***more*** than "C," at least, up to a point. The value of "C," or more likely a percentage of it, is also used to describe the proper charging current for a battery.

"C" is useful for determining how long you can power an Isco instrument from a particular battery. Isco provides average current consumption figures for most equipment. You can use these figures as a rough estimate to calculate the expected life of a battery connected to that equipment.

Determining Life Expectancy of Charge

In this example, a flow meter has an average current draw of 26 mA. We want to power it with an Isco Nickel-Cadmium Battery. The battery has a capacity of 4.0 Ah. First, convert 4.0 Ah into 4,000 mA-h (milliampere-hours). Then divide 4,000 mA-h by 26 mA. The result is 153.8 hours. Dividing 153.8 by 24 (hours/day), we get 6.41, or almost 6½ days. Note that you convert the battery ampere-hour rating to milliampere-hours to make the rating match the equipment current rating, which is in milliamperes. If you prefer, you could leave the battery value in ampere-hours and convert the flow meter current rating from 26 mA to 0.026 amperes.

If you want to use the Isco Lead-Acid Battery, you would convert the ampere-hour rating from 6.5 A-h to 6,500 mA-h, and divide that by 26 mA to get 250 hours. Dividing 250 by 24, we get 10.4 days.

Note that the figures given for current consumption for various Isco products are ***average*** figures based on very specific operating conditions (for flow meters), such as a bubble rate of one bubble per second and a chart advance rate of one inch per hour. If you set the chart advance faster, or increase the bubble rate, the current consumption will increase.

In the same way, current consumption for a sampler depends on how often the unit takes a sample. That will vary widely from one sampling program to another. Note that the current figures supplied are ***average currents,*** meaning that when the plotter or the pump run, ***peak current*** consumption will be considerably greater.

The important issue here is to be aware that current consumption for your equipment will depend largely on your programming choices. Isco cannot guarantee a specific current consumption for a product, because programming flexibility has so great an effect on it. You may have to experiment for some time to match the battery life expectancy with your programming choices.

Charged and Discharged Cell Voltages

When fully charged, a nickel-cadmium battery tests **1.2 to 1.3 volts** per cell. A lead-acid battery shows **2.2 to 2.3 volts** per cell. A nickel-cadmium cell is considered fully discharged below **1.0 volt.** A lead-acid battery is considered fully discharged at **1.75 volts** per cell. Both values are at normal (room) temperatures. You can see from these figures that a "dead" battery will not really be dead, with both batteries showing at least 10 volts left in them. Why not discharge this capacity to zero?

The answer lies in the fact that batteries are chemical in nature. Chemical reactions inside the cells provide the source of electricity. Discharging a battery to zero volts risks having either of two serious things occur. One is damage to the cell's plates from ***depletion*** of the active elements; the other is ***cell reversal.*** Because no two cells in a battery are identical, discharge occurs at different rates inside each cell. One cell usually reaches depletion before the others. If you continue to try to draw power from the battery, the cells with remaining capacity will ***force*** current through the cell, in effect, charging it backwards. This amounts to the electrical reversal of the two poles of the cell, and can ruin either type of battery.

In nickel-cadmium batteries, cell reversal causes gas generation, and that may force the vents to open. In lead-acid batteries, the reversed cell presents a high resistance to the rest of the circuit, making recharging difficult. Finally, while the battery may show nearly full terminal ***voltage,*** there is, in fact, very little ***current*** capacity left in it.

Self-Discharge of Batteries

Self-discharge is the characteristic of all batteries that makes them run down completely over time, even though there is no load attached. Self-discharge is the result of inevitable chemical reactions occurring inside the cell. This characteristic is more serious in some types of batteries than others.

Nickel-cadmium and the newer nickel-hydride batteries have **poor** charge retention. Loss of as much as ***1% per day*** of remaining charge has been reported. On the positive side, complete self-discharge of nickel-cadmium batteries does not permanently harm them. **Alkaline** (primary) cells, (***not*** rechargeable) have **very good** charge retention, keeping most of their charge for several years at moderate (room) temperatures. **Lithium** batteries, also nonrechargeable and often used for memory backup, have **excellent** charge retention, as long as ***ten*** years. **Lead-acid** batteries have **good** charge retention, retaining about 50% of capacity after one year when stored at room temperature. However, you should never allow a lead-acid battery to self-discharge completely. Unlike the nickel-cadmium battery, complete self-discharge will generally **ruin** a lead-acid battery.

Because chemical reactions cause self-discharge, temperature has an effect. Avoid storing batteries in hot environments. The rate of chemical reaction ***doubles*** for every 10° C increase in temperature. Finally, note that the rate of self-discharge tends to increase as the batteries age, especially for nickel-cadmium types, while their ampere-hour capacity usually diminishes.

Model 934 Nickel-Cadmium Battery

The ***Isco Model 934 Nickel-Cadmium Battery*** is the most popular battery for Isco equipment. This battery offers advantages over other types of batteries, particularly lead-acid types. The number of charge/discharge cycles is quite high, as many as 500 or more, according to one manufacturer. A nickel-cadmium battery can stay discharged indefinitely, even at very low temperatures, without sustaining damage. This condition would ruin a lead-acid battery. The battery has an internal fuse, rated at approximately 50 amperes, to prevent the possibility of fire or burns in the event of a short circuit.

If you blow the internal fuse link you will have to disassemble the battery to repair it, or return it to the factory for repair.

CAUTION

Do not test these batteries for charge by "sparking" the output, and be extremely careful putting meter probes inside the output connector. Any accidents resulting in a shorted output will damage the battery in less than three seconds.

One battery manufacturer states that the short-circuit discharge rate from a fully-charged nickel-cadmium battery can be as much as ***50 to 100 times "C."*** For the Isco Model 934 Battery, this could be from ***200 to 400 amperes*** of discharge current. Usually, the resistance of the wires prevents so large a current from leaving the battery, but it is a dangerous level, in any case. Currents this large can do extensive damage, mostly from the heat generated. That is why the battery is fused.

Charging

You can recharge the nickel-cadmium battery with an Isco Power Pack, an Isco Battery Charger, or with the Model 965 Five Station Battery Charger. All these provide the proper current (**400 mA**) for charging the batteries. To charge the battery, connect the plug on the battery cable to the mating receptacle on the power pack, or the connector on the charger. Leave the battery on charge for **15 to 18 hours**. The Five-Station Battery Charger lets you charge as many as five batteries at once, and lets you charge both nickel-cadmium and lead-acid batteries, although not at the same time.

CAUTION

Never charge any battery inside a sealed container or enclosure. Charging may release gases from the electrolyte. These gases can generate dangerous pressure as they try to escape confinement from the cells or enclosure. The gases may be explosive and they can also be irritating to smell.

All rechargeable batteries, whether nickel-cadmium or lead-acid, have one-way safety vents that open to relieve internal pressure generated by overcharging or very heavy discharge. ***Their purpose is to keep the battery from bursting, catching fire, or even exploding.***

These vents ***do not open*** *during normal operation. If they do open, it indicates battery abuse. Venting shortens battery life by depleting irreplaceable electrolyte. Avoid causing any of the conditions that can make this happen.*

Charging Temperature

One manufacturer of nickel-cadmium cells recommends charging them within a temperature range of 32°F (0°C) to 110°F (45°C). Below 32°F, charging increases the gas pressure within the cell, and that may force the safety vent to open. Above 110°F, charging efficiency decreases, and the high temperature accelerates deterioration of the plate separator material, hastening end-of-life.

Determining Charge Condition

Measuring nickel-cadmium batteries shows an almost-constant output voltage from charged to discharged. This is because the electrolyte, water and potassium hydroxide (KOH), is not depleted of ions (which affects conductivity) during discharge, as is the electrolyte in lead-acid batteries. As a result, you cannot measure the output voltage to calculate the remaining charge in the battery. You can achieve the recommended 15-hour charging interval by putting the battery on charge before leaving work in the evening and then taking it off when you come in the next morning (5 PM to 8 AM is 15 hours). As long as the battery is accepting the charge, it will stay cool to the touch. When fully charged, the battery will feel warm, as it dissipates the charging current as heat. Discontinue charging when the battery feels warm.

Avoiding Self-Discharge

As mentioned, nickel-cadmium batteries have a higher rate of self-discharge than other types of batteries. After charging, always try to return the battery to service within a reasonable period of time (one to two weeks at most), to ensure the availability of most of the battery's capacity. Self-discharge does not affect the life or usability of nickel-cadmium batteries, and it does not mean the batteries are bad. It just means that the batteries will not deliver full-rated capacity if you do not return them to service promptly after charging.

Do ***not*** store the batteries in a hot environment, such as a room with a furnace, boiler, or heater, or in direct sunlight, if at all possible. The self-discharge characteristic seems to increase with age, probably due to the deterioration of the plate separator material and the growth of crystalline "whiskers" between the plates.

We suggest you discontinue the use of "old" batteries. Rapid self-discharge is often the actual cause of unreliability in older batteries, not diminished capacity. The manufacturer of the cells used in the Isco battery considers end-of-life to have occurred when battery capacity has dropped to 80% of the rating for new cells.

Finally, if you cannot return the battery to service immediately or don't know the charge condition, simply "top off" the charge for a few hours.

Effects of Overcharging the Battery

Overcharging the nickel-cadmium battery causes the cells to heat up. Over time this heating breaks down the separator material used between the plates inside the cells, encouraging the growth of the crystalline whiskers, causing shorts. Prolonged overcharging will shorten the life of the cells; try to avoid it.

Using Other Battery Chargers

Isco does *not* recommend the use of chargers designed for lead-acid batteries, such as automotive battery chargers. The open-circuit voltage of lead-acid chargers is generally not high enough to fully charge a nickel-cadmium battery, and these chargers are usually not current-regulated. Neither does Isco recommend using chargers intended for other types of nickel-cadmium batteries, especially the so-called "fast-charge" types. These chargers are designed for use only with compatible "fast-charge" cells and can charge the proper batteries in as little as one hour (1.0 "C"). Isco batteries use "standard" cells intended for charging at 400 mA (0.1 "C") for 15 to 18 hours. Chargers that provide more current than this may cause overheating and that may force the safety vents to open, releasing water. *You cannot replace this water.*

Chargers that deliver too little current to the batteries may never charge them to full capacity, and may themselves be damaged from the overload. Do not attempt to use any other charging apparatus without an *accurate digital multimeter* to monitor the charging current. If the charger delivers more than 600 mA, Isco recommends you do not use it. If it delivers less than 100 mA, the charging period becomes too long. Even then the battery may never recharge completely. ***Be sure of proper polarity before connecting any other charging apparatus!*** If you use an Isco Power Pack, you can overcharge the battery occasionally with little loss of capacity. However, you should avoid chronic or prolonged overcharging. Again, return the battery to service promptly.

"Memory" Effects

For a long time, people believed that nickel-cadmium batteries were subject to "memory" effects, and that a complete charge/discharge cycle (exercising the battery) was necessary to maintain battery capacity. "Memory" is the characteristic a battery may develop of appearing to have lost some of its capacity after a few shallow discharges.

The battery will only discharge to the same shallow point. It is now known that the memory effect is not a problem under normal operating conditions, because most Isco applications generally involve a deep or full discharge. If it does occur, it is temporary, and you can reverse it by a deep discharge and charge. If you discharge the battery to random depths, charge for random amounts of time, and subject the battery to various duty cycles, the memory effects will not be present.

Servicing the Nickel-Cadmium Battery

This section covers replacement of the battery fuse and connect cable. You can make both of these repairs yourself. However, some familiarity with electrical/electronic repair procedures is necessary. You must know how to solder, make proper splices, and insulate them safely. You must follow the color codes used to maintain proper polarity on the battery after the repair. If you are not familiar with these procedures, or are uncomfortable doing them, return the battery to Isco for repair. If the fuse is all right and only the cable needs replacing, Isco suggests making the repair after the battery has been discharged.

WARNING

If you accidentally short-circuit a charged battery while changing the cable, it could cause a fire and damage the battery. It could also cause serious personal injury to you.

Fuse Replacement

Remove the screws holding the battery cover to the case; newer batteries have six screws, older ones have four. The fuse is a two-inch piece of #22 AWG solid copper wire inside a tube. In the newer batteries, the fuse is buried in the layer of wax poured over the cells. You will have to dig it out with a screwdriver or a knife. Remove the burnt wire and replace it with a new link. The wire is available from Isco, or you may purchase it locally at a hardware or electronic store. Solder it to the same wires as the previous link. Insulate the splices with tape or shrink tubing, and replace the cover. You do not need to rebury the splice in the potting wax. Note that older nickel-cadmium batteries have an inside cover plate under the case cover and grease potting instead of wax. Make the splices between the two covers. After you have made the repair, replace the battery cover, taking care on the older batteries to locate the metal ferrule (strain relief) on the cable between the bushing built into the battery case and the rib on the underside of the battery cover. On the newer batteries, the cable is pressed between the case and the cover. Replace the screws.

Replacement of the Battery Cable

If the cable on the nickel-cadmium battery is damaged or inoperative, you can replace it in the field. As in the case of replacing the fuse above, remove the screws holding the battery cover. Lift the cover from the case to reveal the cable connections. To make replacement easier, the connections are outside the potting wax, or in the case of the older batteries, outside the inner cover plate. To replace the cable, simply cut away the old cable and splices, ***one wire at a time***, and solder in a replacement. Carefully insulate the exposed wires with shrink tubing (preferred) or electrical tape. Replace the battery case cover as described for changing the fuse above.

WARNING

When replacing a battery cable, be careful not to short the leads from the battery together, or you may irreparably damage the battery and you may also risk personal injury. Insulate splices carefully. Replace only one wire at a time.

Figure 3. Fuse and Cable Replacement

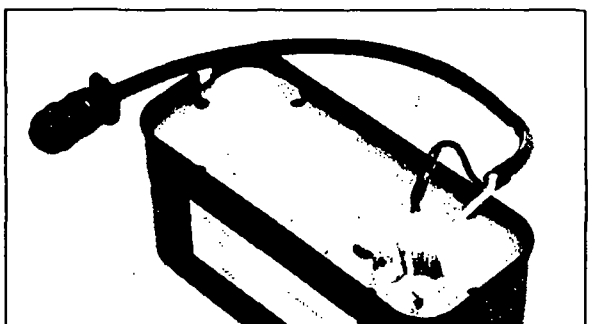

Model 946 Lead-Acid Battery

While the nickel-cadmium battery has traditionally been the usual battery for powering Isco products, Isco also offers a 6.5 ampere-hour gelled-electrolyte 12-volt lead-acid battery. Either battery will operate an Isco sampler, flow meter, portable pump, or other equipment satisfactorily, but there are differences in the charging and operating characteristics of the lead-acid battery.

The lead-acid battery offers higher capacity than the nickel-cadmium battery at a lower price. However, fewer charge-discharge cycles are generally possible. If your experience has been with the nickel-cadmium battery, please study the following before using the lead-acid battery.

- ***Do not run an instrument to complete discharge of the battery.*** Total discharge of gelled-electrolyte batteries can cause cell reversal, and this can ruin the battery. One manufacturer recommends ***10.5 VDC, loaded at 400 mA***, as complete discharge of a 12-volt battery.

- ***Although it may appear that there is still much power left when the battery voltage drops to 10.5 VDC, in fact, there is very little.*** Trying to use all remaining power from a battery will cause cell reversal. Like a chain, the weakest cell is the first to fail in a battery. The first cell depleted will be forced into reversal by the rest of the battery, ***if the load is still connected.***

- ***Recharge lead-acid batteries as soon as possible after use.*** Unlike nickel-cadmium batteries, if you leave lead-acid batteries partially or fully discharged for any period of time, they may not recharge to full capacity. Eventually they will not accept or retain a charge at all.

- ***Battery life is related to the depth of the discharge cycle.*** One manufacturer specifies that you can expect only 200 cycles at 100% discharge for each cycle. With a 50% depth of discharge, this number increases to over 400 cycles. With a 30% depth of discharge, cycle expectancy increases to over 1,000.

- ***Avoid the use of lead-acid batteries in subfreezing environments, especially where you expect deep discharge.*** One manufacturer recommends use above 5° F (-15° C). While a fully-charged lead-acid battery will withstand cold temperatures, a discharged battery can freeze if the temperature is low enough, and that can ruin it. If frozen, the battery could swell and crack the case. This will ruin the battery and could also release toxic substances.

- ***You can easily damage a gelled-electrolyte lead-acid battery by overcharging.*** By necessity, the amount of water in a gelled-electrolyte battery is quite limited. The batteries have a one-way safety vent in each cell that releases water when overcharging causes the pressure to build up inside the battery. Unlike wet-cell lead-acid batteries (such as automotive types), you cannot replace the water. Repeated venting will dry out the cells and kill the battery. Optimal charging causes the battery to release no water vapor and very little gas from the plates.

- ***Lead-acid batteries are not charged the same way as a nickel-cadmium battery.*** Proper charging is done with a constant voltage and a tapering (or declining) current.

Chargers for nickel-cadmium batteries typically use a *constant-current* method. Overcharging is more likely to damage a lead-acid battery by forcing the vents open and drying it out.

Charging Lead-Acid Batteries

The *Isco Model 965 Five-Station Battery Charger* has outputs that can be switched for lead-acid batteries. If you use lead-acid batteries, you should consider purchasing this charger. Note that an earlier version of the five-station charger is for use with nickel-cadmium batteries only. You can use chargers for Isco nickel-cadmium batteries to charge lead-acid batteries, but you must be careful to avoid overcharging. There is a table printed on the lead-acid battery that tells you how long to charge with a nickel-cadmium charger.

The nickel-cadmium charger will not hurt the batteries in the early stages of charging, but in the later stages it delivers far too much current. Since its open-circuit voltage is high, (30 VDC) the current will remain constantly high, no matter what the charge state of the battery is. If not turned off at the proper time, the charger will boil the electrolyte. Some battery manufacturers recommend charging the lead-acid battery near room temperature (70° F or 23° C), if possible. Chargers are typically designed to operate at room temperature. Temperatures deviating significantly either direction from room temperature may cause inaccuracies in charging the lead-acid battery, with potentially harmful long-term effects. The *Model 965 Five-Station Battery Charger* contains compensation for charging at higher and lower temperatures, but the other chargers do not.

Because of the risk of damage to the battery from a nickel-cadmium charger, consider using an accurate digital voltmeter to monitor the charge voltage. Discontinue charging when the battery voltage reaches 15.0 VDC. Charging until the battery "feels warm" is not a reliable indicator for these batteries, as you may already have overcharged them. Discontinue charging if you hear a bubbling sound coming from inside the batteries

When charging lead-acid batteries of any type, please consider the following:

- *Disconnect the battery from the equipment it is powering before charging.*
- *Connect the battery to the charger before plugging the charger in or turning it on; this prevents sparks.*
- *Never charge the battery in a sealed container, nor in an unventilated room.*
- *Do not let the charger run unsupervised or for a long period of time.*
- *Do not charge the battery upside down.*
- *Charging produces explosive gases; do not charge near open flames or sparks.*
- *Do not smoke around the battery while it is charging.*
- *Do not overcharge the battery.*
- *Unplug the charger from the AC supply before disconnecting the battery. This will prevent any sparking that could ignite the gases produced by charging.*

Charge retention is substantially better for lead-acid batteries than for nickel-cadmium types. While a nickel-cadmium battery can self-discharge completely in a matter of months, a lead-acid battery will still have 50% of capacity for nine months to a year when stored at room temperature (70° F or 23° C). At 100° F (38° C), the time drops to four months. At 40° F (5° C), the time is over a year.

However, if a lead-acid battery does self-discharge completely, ***it will often be ruined,*** due to sulfation of the plates. This is very different from the nickel-cadmium battery, which is not harmed by remaining in the discharged state, even for considerable periods of time.

The voltage available from a lead-acid battery drops in a straight line as the battery discharges. This is due to depletion of sulfate ion from the electrolyte, raising the internal resistance. Available voltage drops gradually from approximately ***12.5*** at full charge to ***10.5*** at total discharge (under load). Note that it is important to measure the battery under load. A discharged lead-acid battery may still show 12.5 VDC, when measured with no load. Nickel-cadmium batteries show essentially constant voltage across most of the discharge range.

Model 948 Lead-Acid Battery

In addition to the Model 946 and 947 Lead-Acid Batteries, Isco offers a much larger battery, the Model 948. This battery, which resembles an automotive battery, has a capacity of 45 ampere-hours, *seven times* the capacity of the Models 946 and 947. Like the Model 946 battery, the Model 948 is a gelled-electrolyte, maintenance-free battery. This battery is particularly well-suited to installations that have moderate-to-heavy power requirements. It is also suitable for installations that have fairly low power requirements, but because of their location, must operate unsupervised for long periods of time.

Figure 4. Model 948 Battery

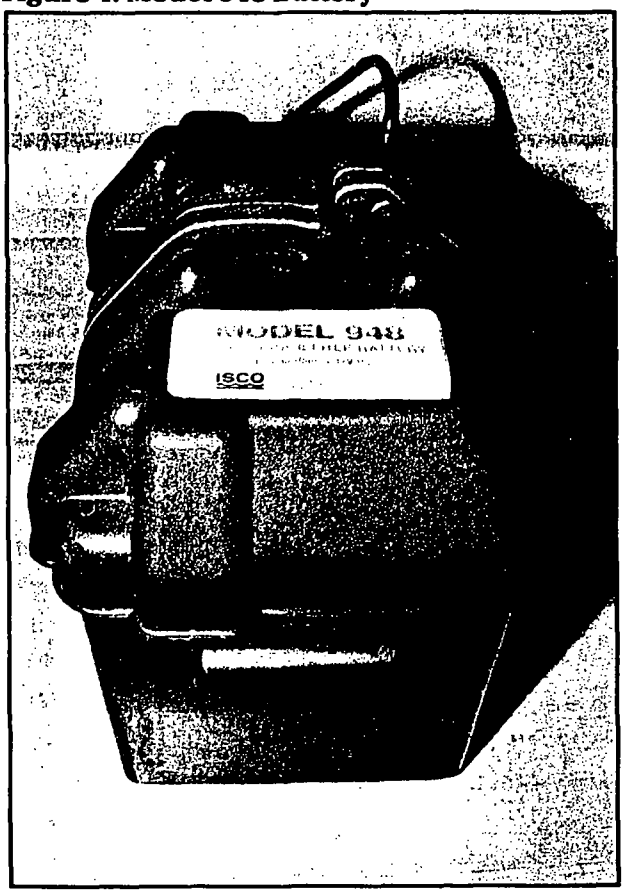

Isco offers the battery, a convenient carrying case (recommended) and a six-foot **connect cable.** The cable terminates in a two-pin M/S connector suitable for attachment to Isco samplers and flow meters. The cable is protected with grease where it connects to the battery. Isco also offers a special **battery charger** suitable for recharging the Model 948 Battery. We recommend the use of this charger, as it automatically senses when the battery is charged and reduces the current to a safe level, thus avoiding the possibility of overcharge. Most automotive-type chargers do not have this capability.

This charger has an output of 6 amperes and is supplied with leads terminated in alligator clips for easy connection to the battery. To recharge the Model 948, simply remove the top of the carrying case and connect the red (positive +) clip to the positive (+) terminal on the battery and the black (negative –) clip to the negative (–) terminal on the battery. Follow the instructions printed on the charger. For safe charging refer to the comments made on the previous page for the Model 946.

If you want to charge the battery with a different charger, note the charging conditions indicated on the battery label. The battery manufacturer recommends that the initial charge not exceed C/5, which in this instance would be 9 amperes.

Figure 5. Model 948 Battery Charger

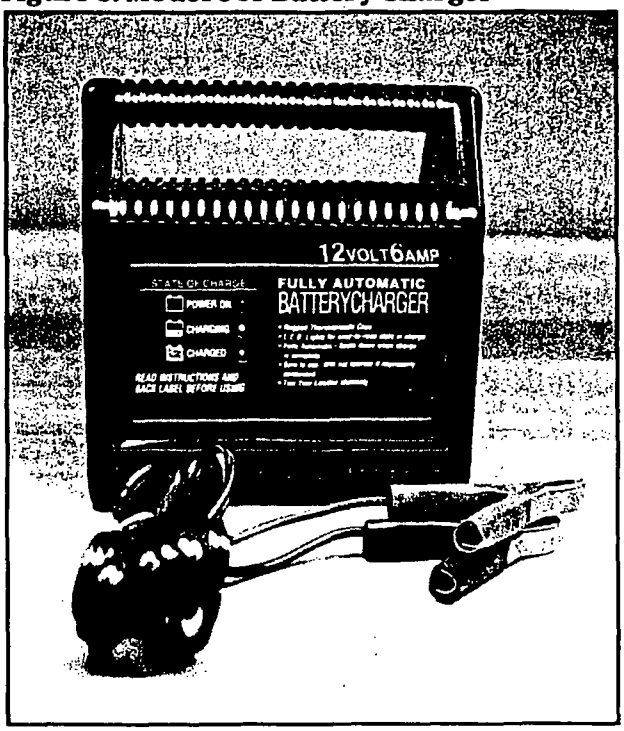

Chargers for smaller Isco batteries are not recommended for the Model 948, as they will take too long to recharge the battery. Note the nylon webbed strap around the battery case. Its purpose is to keep the case closed. It is **not** a carrying handle. Carry the battery case by the handles molded into both narrow ends of the case.

Use of Other Types of Batteries

In some circumstances, you may want to use batteries other than the nickel-cadmium and gelled lead-acid types. For long-term operation, the deep-cycle R-V or marine battery has been a popular and satisfactory choice, due to its high ampere-hour capacity and reasonable cost. In certain instances you can also use alkaline (non-rechargeable) batteries with Isco equipment. However, you should consider the environmental impact of alkaline batteries because of the one-time-only use and necessity of disposal of the spent batteries.

Alkaline (Nonrechargeable) Batteries

Generally, you should only consider alkaline batteries where power consumption by the equipment is extremely low and long periods of unsupervised operation are required. The samplers cannot use alkaline batteries, due to power requirements, and their use with flow meters is not recommended. One application where alkaline batteries are suitable is the 4100 series flow loggers. The flow loggers use two, 6-volt "lantern" batteries.

Deep-Cycle R-V or Marine Batteries

Similar in appearance and construction to an automotive battery, but specially designed to withstand deep discharges, the deep-cycle R-V or marine battery works with Isco samplers, flow meters, pumps, and other equipment. These batteries are quite large compared to the standard Isco battery packs, so you must mount them separately from the equipment they are powering.

CAUTION

Mount wet cell batteries securely so they cannot tip over. This is important because the acid in the electrolyte is both corrosive and toxic.

Connection between battery and equipment is with a special Isco cable. This cable has a two-pin M/S connector on one end and two large alligator clips on the other.

The positive clip (+) has red shrink tubing on its wire to correctly identify polarity. Verify polarity with a meter. Attach the clips to the proper terminals on the battery and plug the M/S connector into the instrument.

Maintenance and Charging

Keep the terminals on the battery posts clean at all times. Lead-acid batteries are notorious for "growing" corrosion on the battery posts. These deposits will rapidly cause the conductors to fail if allowed to form for any length of time. You can easily identify the corrosion as white flakes or powdery deposits. Corrosion on the terminals also can creep into the attached alligator clips, especially the positive one. These deposits are harmful because they will eventually corrode the metal (conductive) elements of the circuit completely away and because they form good insulators when dry. Grease, baking soda, and corrosion-inhibiting felt washers (available from auto-parts suppliers) are all helpful in keeping the connections between the battery and the cable reliable and corrosion-free.

If the battery is not the sealed type, you should check the level of the electrolyte in each cell every time you recharge it. Unsealed batteries have caps on top of the case that you can remove to check the electrolyte. Add ***only*** distilled water according to the battery manufacturer's recommendations; never add common tap water or more electrolyte. You can check charge condition and the condition of each cell with an ordinary battery hydrometer, a device that measures the specific gravity of the electrolyte. Follow the battery manufacturer's recommendations for charging the battery. An automotive-type charger is usually satisfactory for charging these batteries. Isco chargers are designed for batteries with low ampere-hour capacities; their use in this application is not recommended.

Hazard of Short Circuits

As advised for the nickel-cadmium battery, do not check the charge condition of either lead-acid or gelled-electrolyte batteries by "sparking" the output cables (momentarily shorting the wires together). These batteries, when fully charged, can deliver large amounts of current into a short circuit fault, especially if the short is close to the battery. While the current may not be as high as a nickel-cadmium battery, it is still considerable. Unlike nickel-cadmium batteries, lead-acid batteries are ***not*** internally fused. Enough current can flow to burn up the wires quickly. It is possible for battery cables shorted together to "weld." This will cause almost immediate melting and burning of the wire insulation until the wire melts open at some point.

WARNING

Fire, severe burns to the hands, and the release of toxic fumes are all possible from such a mishap.

CAUTION

*If you intend to use any power source other than an Isco battery or power converter, be sure of **proper voltage** and **polarity** before connecting power to the equipment.*

***Never** attach equipment to a power source of unknown polarity or voltage. **Never** attach equipment directly to an **AC** power source under any circumstances, regardless of voltage.*

If you are in doubt, check the power with a **reliable DC voltmeter.** Failure to observe this caution could create a shock or fire hazard, cause serious damage to the instrument, and it could also put you at risk of serious personal injury.

2. Batteries for the Flow Loggers

(Internally Mounted)

The flow loggers contain internal mounting provisions for two different types of batteries. The first type is a pair of standard 6-volt alkaline "lantern" batteries. The second is a 6.5 Ah, 12-volt lead-acid battery, similar to the standard Isco Lead-Acid Battery, but with a different cable and connector. You can also use the Solar Panel Battery Charger, modified to accept a standard Isco Lead-Acid Battery and supplied with an interconnect cable.

Model 947 Lead-Acid Battery

Electrically identical to the Model 946 Isco Lead-Acid Battery, this battery comes with its own special cable and connector. You must use this special arrangement with the flow loggers if you want the battery to be self-contained, as the standard Lead-Acid Battery will not fit inside the flow logger case. You can recharge this battery the same as you recharge the standard Isco Lead-Acid Battery.

Figure 6. Model 947 Flow Logger Battery

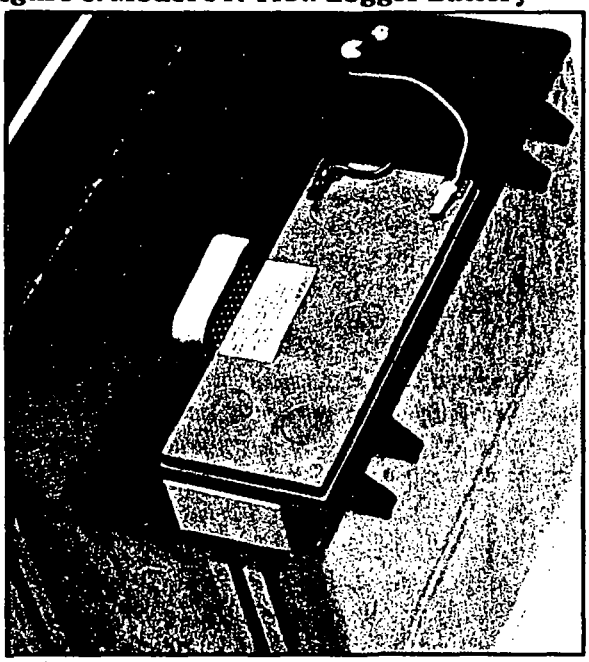

Alkaline "Lantern" Battery

Long used to power lanterns and other sporting equipment, the 6-volt alkaline lantern battery is a satisfactory ***nonrechargeable*** battery for the flow loggers. Because each battery only delivers 6 volts, you must use two of them. Put the batteries into the flow logger case with the contact springs pointing towards the bottom of the battery compartment. Positioning is not critical, because the contact strips in the bottom of the compartment are laid out for universal acceptance. These batteries are available from Isco or from any local hardware, sporting goods, or electronics wholesaler. Note that this type of battery is ***not*** rechargeable, despite occasional claims to the contrary. Attempting to recharge alkaline batteries is reputed to be hazardous in some instances. Never dispose of alkaline batteries in a fire. Always dispose of discharged alkaline batteries in conformance with state and local environmental regulations.

Flow Loggers - External Power Sources

If you want to use an external power source with the flow loggers, almost any of the Isco batteries and power supplies are suitable. The flow loggers have an external power connector on the case and there is a two-foot cable available to connect to an external power source.

Figure 7. Flow Logger Alkaline Battery

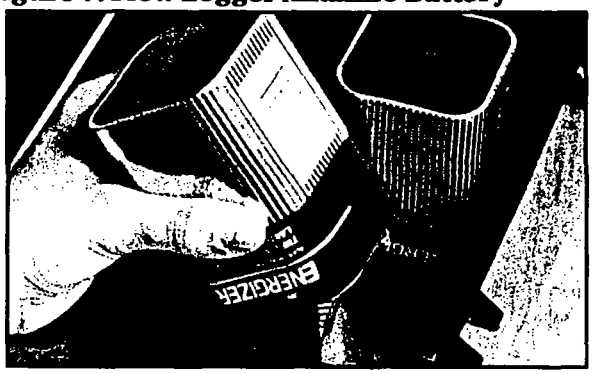

Note that if you suspend a flow logger from the rungs of a manhole, use of an external power source is not practical, as you must secure both the flow logger and the battery. It is generally not possible to use an AC-powered unit in a manhole due to the lack of availability of an AC power connection. The following devices are suitable as ***external*** power sources for the flow loggers:

Batteries

- Isco Model 946 Lead-Acid Battery
- Isco Model 948 Lead-Acid Battery
- 12-Volt R-V Deep-Cycle or Marine Battery

NOTE

You can use the Isco Model 934 Nickel-Cadmium Battery with the flow loggers, but Isco ***does not*** *recommend it. This battery is not ideal for use with the flow loggers because of its self-discharge characteristic. Because the flow loggers need to operate over the long-term, the nickel-cadmium battery is more likely to run down from self-discharge than it is to run down from the flow logger power demands on it.*

Power Packs

- High Capacity Power Pack (Model 913 [120-volt], Model 923 [240 volt])
- Isco Battery Backed Power Pack (Model 914 [120 volt], Model 924 [240 volt])

Battery Chargers

You can use any of the following to recharge the flow logger batteries:

- Isco Five-Station Battery Charger—Model 965
- Isco Power Pack—Models 913 or 923
- Solar Panel Battery Charger—Model 954

- User-Supplied Charger—This would be an automotive-type battery charger, suitable *only* for charging the Deep-Cycle R-V or Marine Battery described previously.

3. Isco Battery Chargers and Power Packs

For use with all Isco products

Isco offers several battery chargers and two different power packs. You can use the power packs instead of the nickel-cadmium or lead-acid batteries to power the samplers, flow meters, or other equipment. The power packs are made for operation from either nominal 120 VAC, 60 Hz (USA) or 220-240 VAC, 50 Hz (Europe and much of the rest of the world) power sources. The 120-volt models are supplied with the three-prong cord commonly used in the USA and Canada. The 220-240-volt models are supplied with the most common two-prong plug used in Europe.

Model 961 Battery Charger

The simplest charger is a wall plug-in transformer type, Model 961, intended for charging the Model 934 Nickel-Cadmium Battery. This charger provides the proper charging current (400 mA) for the nickel-cadmium battery. Only one version, powered from 120 VAC, is available.

Figure 8. Model 961 Wall Charger for Nickel-Cadmium Batteries

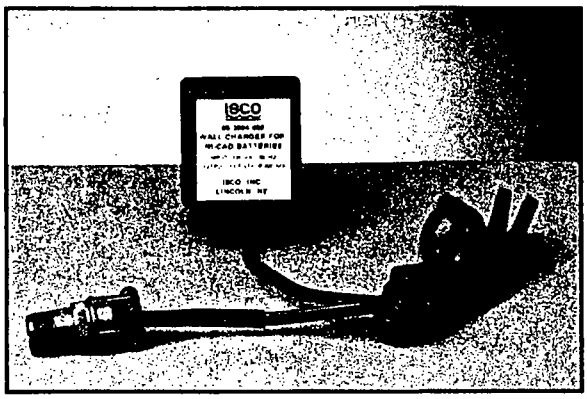

Model 913 and 923 High Capacity Power Packs

The most popular power pack contains both a switching regulator and a current-limited battery charging output. The switching regulator provides a protected output of 12 VDC at 5 amperes. The charger's output is regulated at 400 mA, suitable for nickel-cadmium batteries. The Model 913 (only) is listed by UL (Underwriters Laboratories) and ULC (Underwriters Laboratories of Canada). The Model 913 is for 120 volts and Model 923 is for 240 volts.

Figure 9. Model 913 High Capacity Power Pack

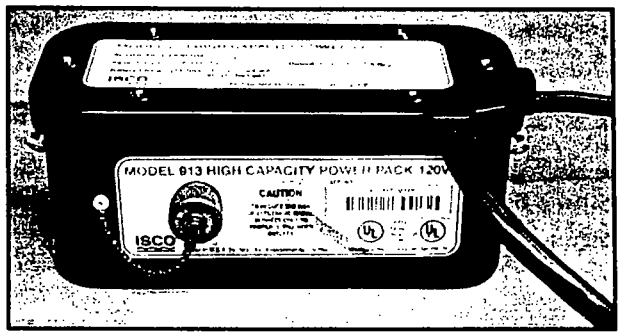

Models 914 and 924 Battery-Backed Power Packs

The Battery-Backed Power Packs contain a 5-ampere switching regulator and a 1.2 ampere-hour, 12-volt nickel-cadmium battery as a backup power source. There is no external charging circuit; the charger is connected internally to the standby battery. The Battery-Backed Power Packs provide uninterruptible switching from AC to the internal battery in the event of power failure. Use this power pack where power outages are frequent, but of ***short-term duration*** and where you cannot tolerate the loss of data during a power failure.

The internal battery has about 30% the capacity of a standard nickel-cadmium battery, so you should not attempt to use it as a combination of a standard power pack and battery. Do ***not*** use this product where power failures are both frequent and long. The limited capacity of the internal battery may run out before power is restored, or outages may be so frequent that the battery does not have enough time to recharge. The Model 914 (only) is listed by UL and ULC. The Battery-Backed Power Pack is available in both nominal 120-volt (Model 914) and 240-volt (Model 924) versions.

Figure 10. Model 914 Battery-Backed Power Pack

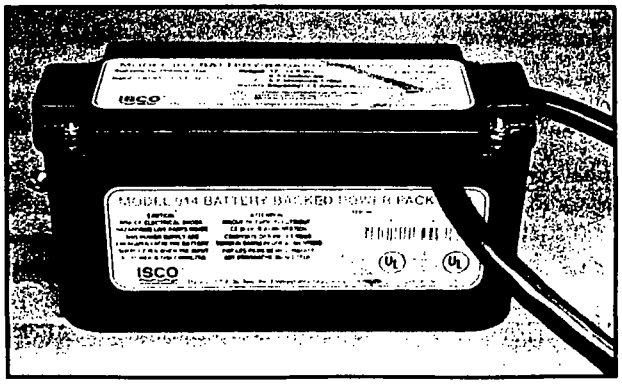

Model 965 Five-Station Battery Charger

The Five-Station Battery Charger provides a convenient way to charge several Isco batteries at a time. It also provides the proper charging conditions for either type of battery, nickel-cadmium or lead-acid. It is the only Isco charger optimized for lead-acid batteries. Switches select operation from either 120 volts or 240 volts and charging for nickel-cadmium or lead-acid batteries.

This charger is listed by UL. This unit replaces a previous model that was designed only for charging nickel-cadmium batteries. You can charge as many as five batteries of either type (nickel-cadmium or lead-acid) at the same time with the Model 965. To charge either type of battery, simply attach the battery's connector to one of the output connectors on the charger. Make certain the selector switch is appropriate for the battery you are charging before applying power.

Generally the batteries (either type) will attain full charge within 15 to 18 hours. Occasional or slight overcharging of the batteries will not hurt them, but Isco recommends that you avoid frequent or prolonged overcharging. Each Five-Station Battery Charger comes with its own manual. Operating instructions are provided in this manual, as well as other information, so it need not be repeated here.

Figure 11. Five-Station Battery Charger

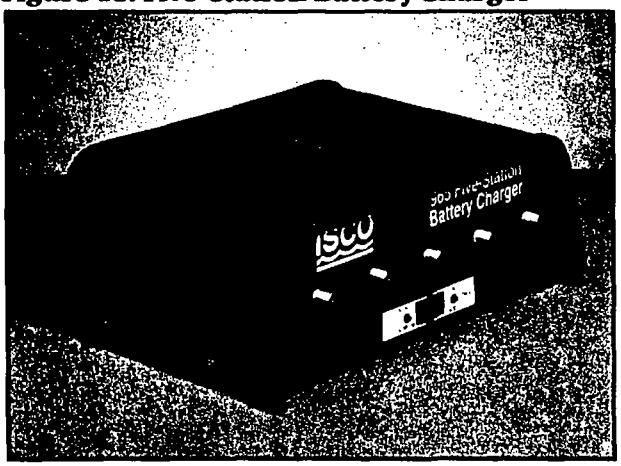

Model 954 Solar Panel Charger

Isco offers the Solar Panel Battery Charger to make possible operation of battery-powered equipment in very remote locations where AC power is not available to run a standard charger or power pack. It is also intended for use where remoteness and/or inaccessibility make periodic battery exchanges by personnel expensive or impractical.

Figure 12. Model 954 Solar Panel Charger

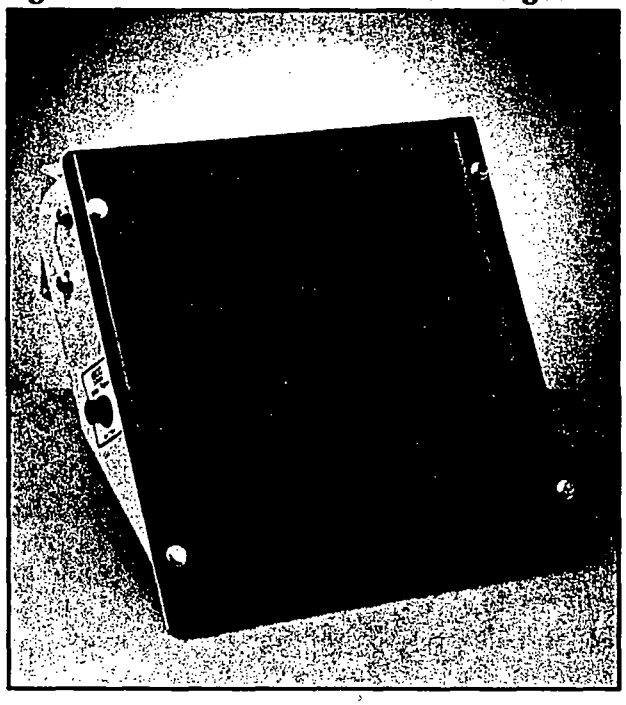

NOTE

*Peak output from the Solar Panel Battery Charger is 330 mA at 13.8 VDC. This voltage and current are suitable for charging Isco Lead-Acid Batteries only. Do **not** attempt to use this charger with nickel-cadmium batteries. It cannot deliver enough current or voltage to fully charge a nickel-cadmium battery.*

You can purchase additional Solar Panel Battery Chargers to connect in parallel—as many as seven. Additional solar panels may be necessary if the current demands of the load (sampler or flow meter) exceed the charging current available from a single solar panel. The solar panel connects to the equipment with a special cable. The solar panel has a built-in battery holder for an Isco Model 946 Lead-Acid Battery. Mounting of the Solar Panel Battery Charger is critical. You must mount the unit at the optimum angle to receive sunlight. This angle varies with location.

Note that the maximum current is only available part of the time. Output declines at both ends of the day and varies considerably with the changing of the sun's angle during the different seasons. The Solar Panel is provided with its own manual.

Obsolete Power Packs

This section provides reference information on older power packs no longer manufactured by Isco. This information is provided because these units were made for a long time and many of them are still in service.

Normal Speed Power Pack (Obsolete)

This unit was designed for flow meters and other lower-current products. It is not recommended for use with the samplers or portable pumps, due to heavy current demands. It provided approximately 2½ amperes at 12 VDC. Its output is ***unregulated***, and it also provided a 400 mA current-limited output for charging a nickel-cadmium battery. It was made in the 120-volt version only.

Super Speed Power Pack (Obsolete)

This power pack preceded the Model 911 and 912 Power Packs. It is suitable for powering Isco equipment with higher current demands than could be met by the Normal Speed Power Pack. It provided approximately 5 amperes at 12 volts DC, regulated, and it also provided a 400 mA current-limited output for charging a nickel-cadmium battery. It was made in both 120-volt and 240-volt versions.

Models 911 and 921 (Obsolete)

These power packs preceded the Model 913 and 923 High-Capacity Power Packs. They are electrically identical, with the exception that the newer models are capable of producing a higher peak current. The Model 911 operates from 120 V and the Model 921 operates from 240 V. Both models provide 12 volts DC at 5 amperes regulated, and have 400 mA current-limited charging outputs for a nickel-cadmium battery.

Models 912 and 922 (Obsolete)

These power packs were the immediate predecessors to the Models 914 and 924 Battery-Backed Power Packs. They are electrically identical, with the exception that the newer models are capable of producing a higher peak current. The Model 912 operates from 120 V and the Model 922 operates from 240 V. Both models provide 12 VDC, 5 amperes regulated, and contain a 12 volt 1.2 ampere-hour nickel-cadmium battery for standby power.

Five-Station Battery Charger (Original Version)

The original version of the Five-Station Battery Charger was similar in function, but somewhat different in appearance to the Model 965. It was capable of charging only nickel-cadmium batteries and was available only in a 120-volt version.

Part Numbers for the Power Products

Model 913 High Capacity Power Pack, 120 V	60-1684-088
Model 914 Battery Backed Power Pack, 120 V	60-3004-130
Model 923 High Capacity Power Pack, 240 V	60-1684-093
Model 924 Battery Backed Power Pack, 240 V	60-3004-160
Model 934 Nickel-Cadmium Battery 12 V, 4 Ah	60-1684-040
Model 946 Lead-Acid Battery 12 V, 6.5 Ah	60-3004-106
Model 947 Lead-Acid Battery 12 V, 6.5 Ah	60-3114-011
Model 948 Lead-Acid Battery 12 V, 45 Ah	68-3000-948
Model 954 Solar Panel Battery Charger	68-3000-027
Model 961 Wall Charger for Nickel-Cadmium Battery	60-3004-059
Model 965 Five-Station Battery Charger, 120/240 V	68-3000-965
Battery Charger, 12 V, 6 Ampere, Automatic, (for the Model 948 Battery only)	341-0118-12

PRODUCT SAFETY DATA SHEET

SANYO ENERGY (U.S.A) CORP.
2001 Sanyo Ave.
San Diego, CA 92173

Information Telephone No.:
(619) 661-6620

Date of Preparation: December 14, 1992

Section I - Product Identification

Product Name: Nickel Cadmium Battery Type No.:

Trade Name: Cadnica

Nominal Voltage: 1.2V

Chemical System: Nickel/Cadmium

Designated for Recharge:

X Yes ____ No

Section II - Hazardous Ingredients

IMPORTANT NOTE: The battery cell should not be opened or exposed to heat because exposure to the following ingredients contained within could be harmful under some circumstances.

Chemical Name	CAS No.	%[1] (by wt)	PEL (mg/m^3)	TLV (mg/m^3)
Cadmium	7440-43-9	11-26	0.005 TWA[2]	0.05 TWA
Cadmium hydroxide	21041-95-2	11-26	0.005 TWA	0.05 TWA
Nickel (powder)	7440-02-0	8-17	1 TWA	1 TWA
Nickel hydroxide	12054-48-7	5-12	1 TWA	1 TWA
Potassium hydroxide	1310-58-3	< 3	2 Ceiling	2 Ceiling

Notes: 1. Concentrations vary depending on the state of charge or discharge.
2. TWA is the time weighted average concentration over an 8-hour period.

Section III - Physical Data

The product is a manufactured article as described in 29 CFR 1910.1200. The battery cell is contained in a hermetically-sealed case, designed to withstand temperatures and pressures encountered during normal use. As a result, during normal use, hazardous materials are fully contained inside the battery cell. However, if exposed to a fire, explosion, extreme abuse, misuse, or improper disposal that results in breaching of the battery cell case, hazardous materials may be released. The following physical data relating to the hazardous materials contained within the battery cell are provided for the user's information. (Also see Section IV - Fire and Explosion Hazards, and Section VIII - Precautions for Safe Handling and Use.)

Cadmium:	Melting point (°F): 610	Boiling point (°F): 1,407
	% Volatile by Volume:	Vapor Pressure (mm Hg):
	Evaporation Rate:	Vapor Density (Air =1):
	Specific Gravity (H_2O): 8.65 @77 °F	
	Solubility in Water: Insoluble	
	Appearance and Odor: Silver-white, blue-tinged, lustrous metal	
Cadmium Hydroxide:	Melting Point (°F):	Boiling Point (°C):
	% Volatile by Volume:	Vapor Pressure (mm Hg):
	Evaporation Rate:	Vapor Density (Air =1):
	Specific Gravity(H_2O): 4.79	
	Solubility in Water: Practically insoluble	
	Appearance and Odor: Powder	
Nickel Powder:	Melting point (°F): 2,831	Boiling point (°F): 5,134
	% Volatile by Volume:	Vapor Pressure (mm Hg):
	Evaporation Rate:	Vapor Density (Air =1):
	Specific Gravity (H_2O): 8.90	
	Solubility in Water: Insoluble	
	Appearance and Odor: Powder	
Nickel Hydroxide:	Melting point (°F): *	Boiling Point (°F):
	% Volatile by Volume:	Vapor Pressure (mm Hg):
	Evaporation Rate:	Vapor Density (Air = 1):
	Specific Gravity (H_2O):	
	Solubility in Water: Insoluble	
	Appearance and Odor: Apple green powder	
	* Note: decomposes above 392 °F into NiO and H_2O.	
Potassium Hydroxide:	Melting point (°F):*	Boiling Point (°F):
	% Volatile by Volume:	Vapor pressure (mm Hg):
	Evaporation Rate:	Vapor Density (Air =1):
	Specific Gravity (H_2O):	
	Solubility in Water: Soluble in 0.9 part water, 0.6 part in boiling water	
	Appearance and Odor: White or slightly yellow	
	* Note: Potassium hydroxide is present as a liquid or paste and acts as the electrolyte in the battery cell.	

Section IV - Fire and Explosion Hazard Data

Flash point: NA Lower Explosive Limit: NA Upper Explosive Limit: NA

Extinguishing Media: Any class of extinguishing medium may be used on the batteries or their packing material.

Special Fire Fighting Procedures: Exposure to temperatures of above 212 °F can cause evaporation of the liquid content of the potassium hydroxide electrolyte resulting in the rupture of the cell. Potential for exposure to cadmium fumes during fire; use self-contained breathing apparatus.

Section V - Health Hazard Data

Threshold Limit Values: See Section II

Effects of a Single (Acute) Overexposure

Inhalation: During normal use inhalation is an unlikely route of exposure due to containment of hazardous materials within the battery case. However, should the batteries be exposed to extreme heat or pressures causing a breach in the battery cell case, cadmium dusts and fumes may be emitted. Inhalation of cadmium dusts or fumes may cause throat dryness, respiratory irritation, headache, nausea, vomiting, chest pain, extreme restlessness and irritability, pneumonitis, and bronchopneumonia. In the case of high concentration exposures (e.g., above 1 to 5 mg/m^3 during an eight hour period) death may occur within several days after the exposure.

Ingestion: If the battery case is breached in the digestive tract, the electrolyte may cause localized burns. Ingestion of cadmium compounds may result in increased salivation, choking, nausea, persistent vomiting, diarrhea, abdominal pain, anemia, tenesmus, and kidney disfunction.

Skin Absorption: No evidence of adverse effects from available data.

Skin Contact: Exposure to the electrolyte contained inside the battery may result in chemical burns. Exposure to nickel may cause dermatitis in some sensitive individuals.

Eye Contact: Exposure to the electrolyte contained inside the battery may result in severe irritation and chemical burns.

Carcinogenicity

Cadmium and nickel have been identified by the National Toxicology Program (NTP) as reasonably anticipated to be carcinogens. U.S. EPA classified cadmium as a "B1" probable human carcinogen. The International Agency for Research on Cancer (IARC) recommended that cadmium be listed as a "2A" probable human carcinogen, and the American Conference of Governmental Industrial Hygienists (ACGIH) has proposed listing cadmium as an A2 carcinogen.

Other Effects of Repeated (Chronic) Exposure

Repeated overexposures to cadmium may result in lung cancer; lung, kidney, and liver disfunction; skeletal disease (e.g., osteoporosis) and reproductive toxicity. Chronic overexposure to nickel may result in cancer; dermal contact may result in dermatitis in sensitive individuals.

Medical Conditions Aggravated by Overexposure

A knowledge of the available toxicology information and of the physical and chemical properties of the material suggests that overexposure in unlikely to aggravate existing medical conditions.

Emergency and First Aid Procedures

Swallowing: Do not induce vomiting. Seek medical attention immediately.
Skin: If the internal cell materials of an opened battery cell comes into contact with the skin, immediately flush with water for at least 15 minutes.

Inhalation: If potential for exposure to cadmium or nickel fumes or dusts occurs, remove immediately to fresh air and seek medical attention.

Eyes: If the contents from an opened battery comes into contact with the eyes, immediately flush eyes with water continuously for at least 15 minutes. Seek medical attention.

Section VI - Reactivity Data

The batteries are stable under normal operating conditions.

Hazardous polymerization will not occur.

Hazardous decomposition products: oxides of cadmium and nickel

Conditions to avoid: heat, open flames, sparks, and moisture.

Potential incompatibilities (i.e., materials to avoid contact with): The battery cells are encased in a non-reactive container; however, if the container is breached, avoid contact of internal battery components with acids, aldehydes, and carbamate compounds.

Section VII - Spill and Leak Procedures

Spill and leaks are unlikely because cells are contained in an hermetically- sealed case. If the battery case is breached, don protective clothing that is impervious to caustic materials and absorb or pack spill residues in inert material. Dispose of as a hazardous waste in accordance with applicable state and federal regulations. Resultant spill residues may be characterized as D002 (caustic) and D006 (cadmium) pursuant to the federal Resource Conservation and Recovery Act (RCRA). See Section IV for response to fires or explosions.

Section VIII - Safe Handling and Use (Personal Protective Equipment)

Ventilation Requirements:	Not required under normal use.
Respiratory Protection:	Not required under normal use.
Eye Protection:	Not required under normal use.
Gloves:	Not required under normal use.

Section IX- Precautions for Safe Handling and Use

Storage: Store in a cool place, but prevent condensation on cell or battery terminals. Elevated temperatures may result in reduced battery life. Optimum storage temperatures are between -31°F and 95°F.

Mechanical Containment: If there are special encapsulation or sealing requirements, consult your SANYO Energy Corp. representative about possible cell hazard precautions or limitations.

Handling: Accidental short circuit will bring high temperature elevation to the battery as well as shorten the battery life. Be sure to avoid prolonged short circuit since the heat can burn attendant skin and even rupture of the battery cell case. Batteries packaged in bulk containers should not be shaken. Metal covered tables or belts used for assembly of batteries into devices can be the source of short circuits; apply insulating material to assembly work surface.

If soldering or welding to the case of the battery is required, consult your Sanyo Energy Corp. representative for proper precautions to prevent seal damage or external short circuit.

Charging: This battery is designed for recharging. A loss of voltage and capacity of batteries due to self-discharge during prolonged storage is unavoidable. Charge battery before use. Observe the specified charge rate since higher rates can cause a rise in internal gas pressure which may result in damaging heat generation or cell rupture and or venting.

Labeling: If normal label warnings are not visible, it is important to provide a device label stating:

CAUTION: Do not dispose in fire, mix with other battery types, charge above specified rate, connect improperly, or short circuit, which may result in overheating, explosion or leakage of cell contents.

Disposal: Return to Sanyo Energy Corp. for recycle. Contact your Sanyo representative for more information on the EarthSaver 2001 recycling program. Batteries must be handled in accordance with all applicable state and federal laws and regulations.

DO NOT INCINERATE or subject battery cells to temperatures in excess of 212°F. Such treatment can vaporize the liquid electrolyte causing cell rupture. Incineration may result in cadmium emissions.

The information and recommendations set forth are made in good faith and believed to be accurate as of the date or preparation. SANYO ENERGY CORP. makes no warranty, expressed or implied, with respect to this information and disclaims all liabilities from reliance on it.

DOUGLAS BATTERY MANUFACTURING COMPANY

Material Safety Data Sheet

GUARDIAN SEALED
LEAD/ACID BATTERY

THE INFORMATION BELOW IS BELIEVED TO BE ACCURATE AND REPRESENTS THE BEST INFORMATION CURRENTLY AVAILABLE TO US. HOWEVER, WE MAKE NO WARRANTY OF MERCHANTABILITY OR ANY OTHER WARRANTY, EXPRESS OR IMPLIED, WITH RESPECT TO SUCH INFORMATION, AND WE ASSUME NO LIABILITY RESULTING FROM ITS USE. USERS SHOULD MAKE THEIR OWN INVESTIGATIONS TO DETERMINE THE SUITABILITY OF THE INFORMATION FOR THEIR PARTICULAR PURPOSES.

Manufacturer's Name	Douglas Battery Manufacturing Co.	**Emergency Telephone No.**	(919) 650-7000
Address	500 Battery Drive, Winston-Salem, NC 27107	**Other Information Calls**	(800) 368-4527
Signature of Person Responsible for Preparation	A. L. Coates	**Date Prepared**	Rev. March 1, 1993

SECTION 1 — IDENTITY

Product Name	Guardian Sealed Lead/Acid Battery		
Common Synonyms	Battery, Wet, Non-Spillable, Electric Storage	UN2800	
Chemical Name	Not Applicable	**Chemical Family**	Lead/Acid Storage Battery
Formula	Not Applicable		
Product Use	Electric storage battery for cyclic or standby power		

SECTION 2 — HAZARDOUS INGREDIENTS

Component	CAS No.	Hazard Category	Percent Weight	ACGIH TLV	OSHA PEL
Lead/Compounds	7439-92-1	Acute/Chronic	60-70%	0.15mg/m³	0.05mg/m³
Arsenic	7440-38-2	Acute/Chronic	< 1%	0.2mg/m³	0.01mg/m³
Calcium	7440-70-2	Reactive	< 0.15%	Not Applicable	Not Applicable
Sulfuric Acid	7664-93-9	Acute/Chronic Corrosive, Oxidizer	20-30%	1.0mg/m³	1.0mg/m³

NOTE: Exposure to these materials will not occur under normal conditions of use.
This product description or Tradename contains toxic chemicals subject to the reporting requirements under Section 313 of Title III "The Superfund Amendment and Reauthorization Act of 1986" and 40 CFR 372 and California Proposition 65.

SECTION 3 — PHYSICAL AND CHEMICAL CHARACTERISTICS

Boiling Point	Not Applicable	**Melting Point**	Polypropylene > 320°F.	**Vapor Pressure (MMHG)**	Not Applicable	**Vapor Density (AIR=1)**	Not Applicable
Specific Gravity	Lead approx. 13	**Percent Volatile By Volume**	None	**Solubility In Water**	Not Applicable	**Reactivity In Water**	Not Applicable
Appearance	Battery: Rectangular polypropylene or polystyrene case with lead terminals.						
Physical State	Solid sealed unit	**PH**	Not Applicable	**Flash Point (Closed Cup)**	Polypropylene case 675°F	**Autoignition Temperature**	Not Applicable
Flammable Limits in Air (Percent by Volume) Lower Not Applicable Upper Not Applicable				**Fire Extinguisher Media** Halon, dry chemical			
Special Fire Fighting Procedures	Extinguish fire with agent suitable for surrounding combustible materials. Cool exterior of battery if exposed to fire to prevent or mitigate release of lead compounds and fumes.						
Unusual Fire and Explosion Hazards	None						

SECTION 4 — PHYSICAL HAZARDS

Incompatibility (Materials to Avoid) Keep battery case away from strong oxidizers, solvents.

Stability Stable

Hazardous Decomposition Products None

Hazardous Polymerization Will not occur

SECTION 5 — HEALTH HAZARDS

Threshold Limit Value (TLV) Permissible exposure limits (TWA)

Lead	TLV 0.15 mg/m³	PEL 0.05mg/m³
Sulfuric Acid	TLV 1 mg/m³	PEL 1mg/m³

Signs and Symptoms of Exposure Exposures to sulfuric acid (battery electrolyte), lead, lead dioxide, or lead sulfate may occur if the sealed battery case is damaged.

Exposure to lead may include:

1. Chronic overexposure: Tire easily, loss of appetite, irritability, metallic taste, insomnia; toxic to nervous system, kidneys and reproductive system.
2. Acute overexposure: Constipation, vomiting, blue line on gums, weak wrists or ankles, weight loss, yellowish skin.

Exposure to sulfuric acid (battery electrolyte) may include:

1. Chronic over exposures: Inhalation – erosion of teeth, inflammation of nose, throat and bronchial tubes.
2. Acute overexposure: Eyes – severe burns, cornea damage, blindness. Skin – severe irritation, burns, ulceration. Inhalation-respiratory irritation, inflammation of bronchial membranes. Ingestion – severe burns and ulceration of mouth, throat, esophagus and stomach, damage to kidney and intestinal tract.

Medical Conditions Generally Aggravated by Exposure Respiratory exposure to airborne sulfuric acid will aggravate lung damage or other pulmonary conditions. Harmful effects of lead are increased for a person with dietary deficiencies in calcium, iron and zinc.

Routes of Entry Lead: ingestion, inhalation Sulfuric acid: skin, eyes, inhalation, ingestion

Carcinogenicity

National Toxicology	I.A.R.C. Monographs	OSHA	EPA CAG
None Found	None found	None found	Yes (Lead)

Emergency and First Aid Procedures Lead/lead compounds exposure

1. **Inhalation:** Remove from exposure, see physician.
2. **Eyes:** (Dry oxide) Wash eyes with copious quantities of running water for 15 minutes. Obtain medical attention.
3. **Skin:** Not a direct route of entry.
4. **Ingestion:** See physician.

Sulfuric acid exposure

1. **Inhalation:** Remove to fresh air, see physician immediately. If person is unconscious, perform CPR, keep victim warm and at rest, if breathing is difficult, give oxygen.
2. **Eyes:** Wash eyes with copious amount of water for 15 minutes or until acid is removed. Hold lids open while washing. See physician.
3. **Skin:** Remove all contaminated clothing, flush skin with copious quantities of water until free of acid.
4. **Ingestion:** Do not induce vomiting, do not give anything by mouth to an unconscious patient, see physician immediately.

SECTION 6 — SPECIAL PROTECTION INFORMATION

Respiratory Protection If product is involved in fire, release of dust or fumes from damaged cases may result. Use of SCBA, full face or half-mask respirator with HEPA cartridge would be recommended.

Protective Equipment Use leather or other protective gloves to minimize lead contamination if handling broken units. Use safety glasses, face shield or goggles for handling broken or damaged product.

SECTION 7 — SPECIAL PRECAUTIONS AND SPILL/LEAK PROCEDURES

Precautions In Handling and Storage Exercise caution in normal handling and storage due to weight of units.

Other Precautions Do not allow metal or other conductive material to short circuit terminals. Heat, sparks, damage to electrical circuits, and fire potential may result from short circuiting. Practice good hygiene to minimize personal exposure.

Material Spills or Release Will not occur unless sealed case is damaged. Pick up and containerize all battery parts and materials. Limit personal exposures with gloves, eye and face protection, as noted above. Neutralized sulfuric acid/electrolyte with lime, soda ash or sodium bicarbonate.

Waste Disposal Battery and parts may be recycled by EPA permitted secondary lead smelting facility or disposed of as hazardous waste pursuant to RCRA requirements.

Panasonic

Panasonic Industrial Company
Division of Matsushita Electric
Corporation of America

Two Panasonic Way
Secaucus, New Jersey 07094
201.348.7000
Fax: 201.392.4782

Battery Sales Group

May 24, 1996

ISCO Inc.
P.O. Box 82531
Lincoln, NE 68501-2531

Material Safety Data Sheets (MSDS) are a subrequirement of the Occupational Safety and Health Administration (OSHA) Hazard Communication Standard 29 CFR Subpart 1910.1200. This Hazard Communication Standard does not apply to various subcategories including anything defined by OSHA as an "article". OSHA has defined "article" as a manufactured item: (i) which is formed to a specific shape or design during manufacture; (ii) which has end use function(s) dependent in whole or in part upon its shape or design during end use; and (iii) which does not release, or otherwise result in exposure to, a hazardous chemical, under normal conditions of use. OSHA then goes on to define "hazardous chemical" and "exposure".

Because all of our batteries are defined as "articles", they are exempt from the requirements of the Hazard Communication Standard, 29 CFR 1910.1200, hence a MSDS is not required.

The following components are found in a Panasonic sealed lead acid battery:

		Weight Range
Sulfuric Acid - Electrolyte	$H_2 SO_4$	10 - 20%
Lead - Negative Electrode	Pb	30 - 60%
Lead Dioxide - Positive Electrode	PbO_2	5 - 25%
Lead Sulfate - Positive Electrode	$PbSO_4$	1 - 25%

Concentrations of components depend on the state of charge or discharge and battery size. The hazardous waste code for lead acid batteries is D008. Please dispose of properly. If one of our batteries should leak electrolyte, wash the area with copious amounts of water.

Sincerely,

Battery Sales Group
Panasonic Industrial Company

one year, limited

Warranty

Please read before instrument setup.

ISCO INSTRUMENTS HAVE A ONE YEAR LIMITED WARRANTY COVERING BOTH PARTS AND LABOR. Should any instrument become defective due to faulty parts or workmanship within the guarantee period, it will be repaired at the factory at no charge to the customer. Isco will pay **SURFACE** transportation charges both ways within the contiguous United States if the instrument proves to be defective **WITHIN 30 DAYS** from the date of shipment. Throughout the remainder of the guarantee period, the customer will pay transportation charges to return the defective instrument to Isco, and Isco will pay **SURFACE** transportation charges to return the repaired instrument to the customer. Isco will not pay air freight or packing and crating charges. The warranty period begins with the shipping date of the instrument to the original purchaser. All requests for warranty service must be received within the warranty period.

At the convenience of Isco, Isco may reimburse the customer to have the repairs performed by a qualified technician in the customer's locality. Authorization must be granted prior to the time any repair is performed.

ISCO'S EXCLUSIVE LIABILITY IS LIMITED TO REPAIR OR REPLACEMENT OF DEFECTIVE INSTRUMENTS. UNDER NO CIRCUMSTANCES IS ISCO LIABLE FOR CONSEQUENTIAL DAMAGES. THIS WARRANTY IS EXPRESSLY IN LIEU OF ALL OTHER WARRANTIES AND OBLIGATIONS AND ISCO SPECIFICALLY DISCLAIMS ANY WARRANTY OF MERCHANTABILITY OR FITNESS FOR A PARTICULAR PURPOSE. The following are not covered by this warranty: Expendable items such as charts, pens, suction and pump tubing and glassware; damage due to corrosion, abuse, accident or alteration; and suitability for any specific purpose.

OUTSIDE THE WARRANTY PERIOD, REPLACEMENT PARTS AND REPAIR LABOR ARE GUARANTEED FOR 90 DAYS.

The warrantor is Isco, Inc., Lincoln, Nebraska, U.S.A.

INSTRUCTIONS FOR RETURNING INSTRUMENTS FOR REPAIR.

Before returning any instrument for repair, call or write our service department for instructions. Simple difficulties can often be diagnosed over the phone.

Pack the instruments carefully, preferably in its original carton, and ship to the attention of the service department. U.P.S. or motor freight is generally the best method except for very small, non-fragile items which can be sent by insured parcel post. **BE SURE TO ENCLOSE A NOTE EXPLAINING THE DEFECT AND A PURCHASE ORDER AUTHORIZING THE REPAIR.**

Return equipment to:
Isco, Inc.-Environmental Division
531 Westgate Blvd.
Lincoln, NE 68528-1586, U.S.A.
Mailing Address: P.O. Box 82531, Lincoln, NE 68501-2531, U.S.A.
Phone: (402) 474-2233 or (800) 228-4373 (U.S.A.)
Fax: (402) 474-6685

ISCO®

June, 1995

SECTION 9

U.S. EPA REGION IV

SDMS

Unscannable Material Target Sheet

DocID: 10728056 Site ID: SCD003354412

Site Name: Sangamo Weston

Nature of Material:

Map:	☐	Computer Disks:	☐
Photos:	☐	CD-ROM:	☐
Blueprints:	☐	Oversized Report:	☐
Slides:	☐	Log Book:	☐

Other (describe): 6' ID x 10' SSH (FB, DJ) Recirculation Tank

Amount of material:

* Please contact the appropriate Records Center to view the material *

SECTION 10

TASKMASTER

SERIES 5100

TASKMASTER

Horizontal or vertical mounting
industrial/commercial unit heater

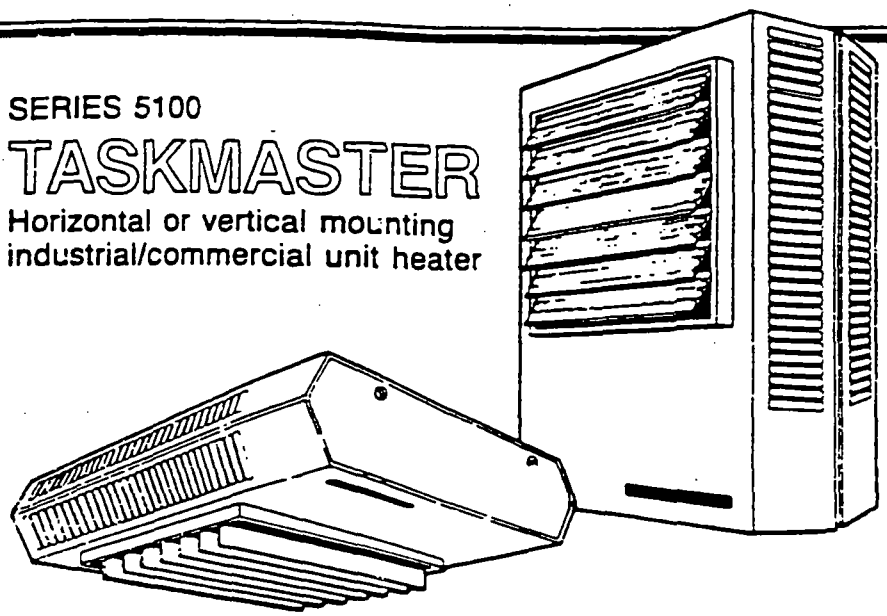

INSTALLATION INSTRUCTIONS & PARTS LIST

ATTENTION: READ CAREFULLY BEFORE ATTEMPTING TO INSTALL, OPERATE OR SERVICE THE TASKMASTER UNIT HEATER. RETAIN THESE INSTRUCTIONS FOR FUTURE USE.

FEATURES

Forced air electric unit heater available in 208, 240/208, 277, 480 or 600 volt as standard.

Ten standard heating capacities of 3.3 KW/11,260 BTUH thru 50.0 KW/170,600 BTUH.

208 and 240/208 volt models are single phase field convertible to three phase on 3.3 thru 10.0 KW Models. (Single phase only available on 3.3, 5.0, 7.5 and 10 KW 277 volt models.

Specially designed inlet louver allows the fan to pull cool air evenly across the high mass all-steel element.

Outward drawn venturi and adjustable louver assembly further directs the outlet air in a uniform pattern to meet specific air pattern requirements in either the horizontal or vertical mounting position.

Optional wall/ceiling or vertical mounting brackets. (As required).

Four position weld nuts supplied in case top and back for field mounting by drill rods or eye bolt with chain. (Hardware supplied by others.)

Optional radial or anemostat diffusers lending air pattern versatility when mounted vertically.

Modular control kits for field installation. Disconnect switch, thermostat, summer fan switch, heat recovery thermostat. All kits with spade terminals (Except disconnect switch).

Single point terminal board wiring of integral control kits.

24 volt low voltage control circuit standard on all contactor and transformer models.

Roomy control box with access door locked into position by two (2) ¼ turn fasteners for ease of installation.

Revised 10/95
Form 9632

PROPER LOCATION INSTRUCTIONS

Once the total heating load is calculated, the quantity and capacity of the unit heaters must be determined. Because a large number of low-capacity heaters provides more uniform heat distribution, this approach is recommended when the area will be occupied by a relatively large number of sedentary personnel, perhaps working on production lines and at benches.

A large number of smaller capacity unit heaters tends to prevent hot drafts, reduces noise levels, and increases diversity of load to help reduce electrical demand and operating costs.

In warehouses where even heat distribution and constant temperatures are less important, a smaller number of high capacity units can be used - in many cases reducing first cost. To maintain reasonable heat distribution and reduce severe stratification even in lower bay areas, the total air volume of the space should pass through the unit heaters about three times per hour. (Take total cubic feet and divide by 20 in order to determine proper total heater CFM rating.)

It is important that the rated voltage of the heating equipment match the supply voltage. Supply voltage in excess of the heater rated voltage can damage equipment. Supply voltage lower than the rated heater voltage will decrease heater output as well as run the risk of damaging some components.

Horizontal unit heaters are recommended in low bay areas with maximum 15 to 18 foot ceilings. These should be concentrated along outside wall or other areas of greatest heat loss, spaced to set up a generally circular air movement, each heater supporting the air stream of the other. Additional vertical down blow unit heaters with appropriate accessory diffusers can be located to counteract ceiling heat losses.

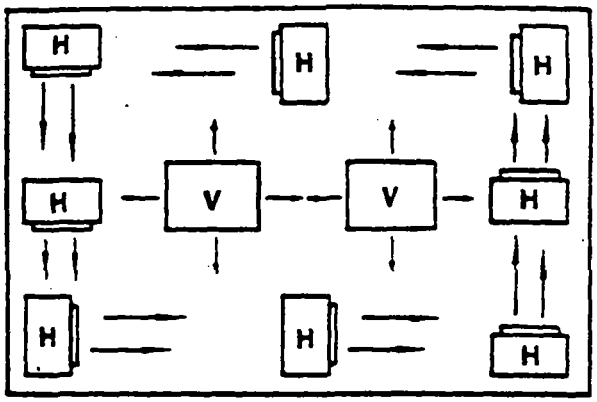

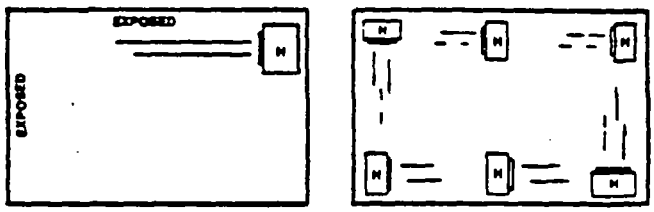

GENERAL SAFETY INFORMATION

CAUTION:

Follow all local electrical and safety codes, as well as the National Electrical Code (NEC) and the Occupational Safety and Health Act (OSHA).

To avoid possible electrical shock, be sure the electrical current is turned off at the main switch prior to wiring or servicing of unit.

If the power disconnect is not integral and is out-of-sight, lock it in the open position and tag to prevent unexpected application of power prior to performing any service or maintenance on the unit.

The unit when installed must be electrically grounded in accordance with the National Electrical Code and standard industry practice.

Make certain that the power source conforms to the requirements of your equipment. See Table 2 for information as to wire size, circuit size, etc.

Check heater voltage and phase on rating label to confirm it is the same as the electric service supply.

Wiring diagrams of the heaters and supply connections are permanently attached to the inside of the heater access door. All terminals are coded in accordance with the wiring diagram. Accessory wiring are shown on the unit wiring diagram and supporting literature.

The heater must be mounted at least 7' above the floor to prevent accidental contact with the fan blade which could cause injury. Install unit so there are no obstructions to the intake or discharge. Maintain clearances as shown on Table 1, 2, Fig. 1 & 2.

The wall/ceiling mounting structure and anchoring provisions must be of sufficient strength to support the combined weight of the heater and mounting bracket.

PRINCIPLES OF OPERATION

Upon a call for heat from the floor level or unit mounted optional accessory thermostat, the unit fan motor and heating elements shall be energized and remain on until temperature reaches setting of thermostat; at which time the heating elements shall be deenergized. The fan motor shall continue to run and purge heater casing of residual heat until setting of fan override is reached, then the fan motor shall be deenergized. For those units with a factory installed two speed fan switch (25-50KW), the unit as shipped from the factory is set for the "low" speed fan position. Customer option to set to "high" speed. For those units available with subdivided circuits, the accessory two stage thermostat (optional) will, upon a call for heat, energize fan motor and the first stage heating element. Should temperature continue to fall, the thermostat shall energize the second stage heating element. Upon a rise in space conditions towards setting of the thermostat, the two stages of heating elements shall be deenergized in reverse sequence. The fan motor shall continue to run and purge heater casing of residual heat until setting of fan override is reached, then the fan motor shall be deenergized.

The accessory unit mounted stratification thermostat will energize the unit heater fan motor upon a rise in temperature above its setting. When the unit mounted stratification thermostat closes on a temperature rise and at the same time the floor thermostat calls for heat, the motor shall be energized immediately and the heating element shall be energized, as previously described.

The automatic reset safety high limit shall deenergize the heating elements and control circuits should the temperature exceed the setting of this device. The fan safety override shall energize fan motor any time the setting of this device is exceeded so as to purge heater casing of excess residual heat. When the accessory fan switch is placed in the ON position (for summer air circulation), the unit heater fan motor shall be energized.

NOTE: The wall thermostat is to be set to the OFF Position during this mode of operation (units with contactors).

For those accessory thermostats equipped with an integral fan switch, place the switch in the HEAT, or AUTO position for operation of the fan and elements which shall then be under control of the thermostat as described above. When switch is placed in the OFF position, the unit shall be deenergized. When switch is placed in the FAN position, elements shall be deenergized and fan shall be immediately energized.

VERTICAL DISCHARGE UNITS — AIR PATTERNS

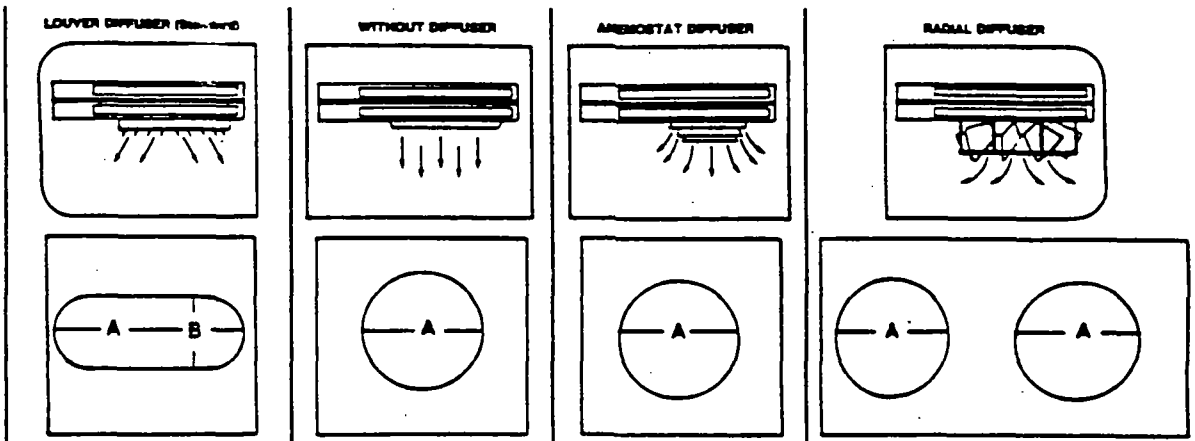

TABLE 1

USED ON	MAX. MTG HT.	A	B	STOCK NO.	MAX. MTG HT.	A	MAX. MTG HT.	A	STOCK NO.	STOCK NO.	MAX. MTG. HEIGHT 45°	MAX. MTG. HEIGHT OPEN	A 45°	A OPEN
3.3 & 5.0 KW	9	20	10	STD	9	15	—	—	N/A	N/A	—	—	—	—
7.5 & 10.0 KW	12	40	22	STD	12	30	10	30	AD5120	RD5120	0	14	36	30
15.0 & 20.0 KW	18	52	30	STD	18	40	15	38	AD5120	RD5120	14	21	42	35
25.0 & 30.0 KW	22	75	42	STD	22	55	17	50	AD5150	RD5150	20	30	62	44
40.0 & 50.0 KW	24	84	47	STD	24	64	20	60	AD5150	RD5150	18	28	68	54

STD = Standard N/A = Not Applicable

Optional diffusers lend added air pattern versatility to individual vertical down blow installations as shown in above illustrations.

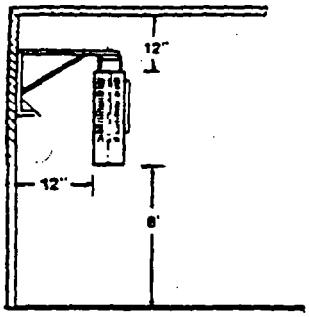

MOUNTING CLEARANCE

Fig. 1
HORIZONTAL DISCHARGE

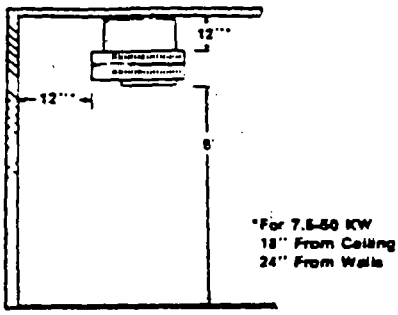

Fig. 2
VERTICAL DISCHARGE

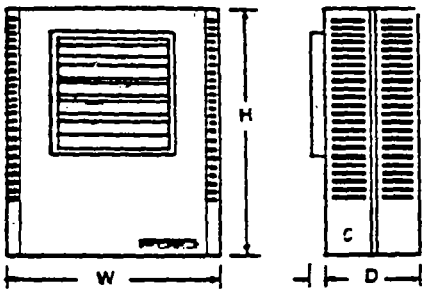

Fig. 3 DIMENSIONS (INCHES)

KW	H	W	D
3.3, 5.0	17-3/4	14-15/32	6-1/2
7.5, 10.0	24-5/16	21-1/2	6-1/2
15.0, 20.0	28-11/16	21-1/2	6-1/2
25.0, 50.0	34	29-1/4	10-1/16

Fig. 3A

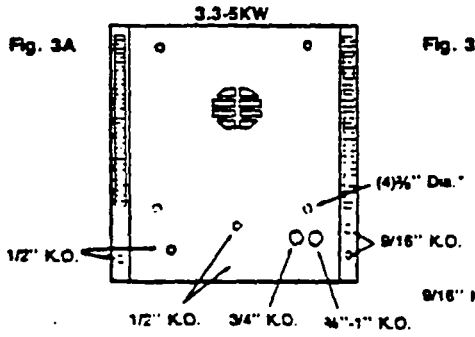

Fig. 3B

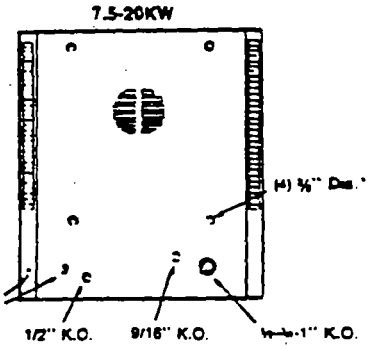

Fig. 3C

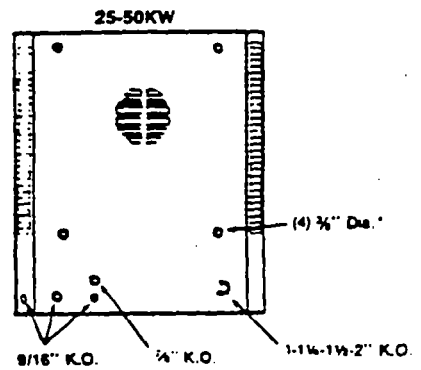

*For vertical discharge mounting bracket

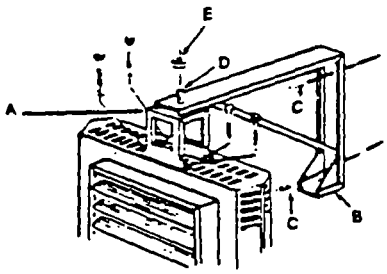

Fig. 5
WALL MOUNT
HORIZONTAL DISCHARGE

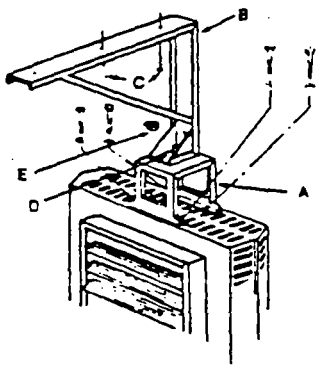

Fig. 6
CEILING MOUNT
HORIZONTAL DISCHARGE

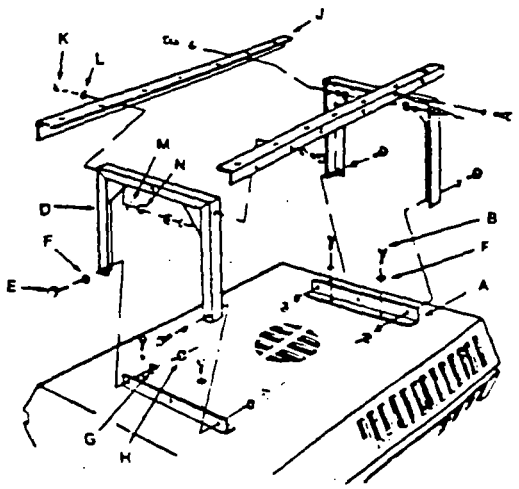

Fig. 7
CEILING MOUNT
VERTICAL DISCHARGE

INSTALLATION INSTRUCTIONS

5100 Series Unit Heaters

All electric unit heaters are shipped fully assembled. Installation includes hanging the unit, mounting the built-in and remote accessories, wiring of optional control devices, and electrical wiring to the unit.

To insure proper delivery of the heated air to desired areas, follow the mounting height and air projection tables included in these instructions. Follow Fig. 1 & 2 for minimum wall and ceiling clearances.

The wall and/or ceiling structure must be sufficient to support the combined weight of the heater and any mounting bracket and accessories.

Be sure power source is de-energized before installing heater. Check heater voltage and phase listed on heater data tape on back of unit to make sure they are the same as the electrical service supplied.

Certain units are adaptable from single to three phase service. Follow instructions noted on the unit wiring diagram for this conversion. Units that carry a dual voltage rating (HF) require specific wiring changes when converting from 240 to 208 volt service. Carefully follow the instructions on the unit wiring diagram.

Open the access panel (2 ¼ turn fasteners).

Remove the desired knock-out(s) on back of the heater.

Install any optional accessories following their installation instructions before mounting unit. Following the correct unit/accessory wiring diagram, connect the power supply, electrical ground and accessories to the correct terminals or termination points using accepted practices.

NET JUNCTION BOX VOLUME

KW	CUBIC INCHES	CC
3.3 - 5	74.4	1219
7.5 - 10	198	3245
15.0 - 20	198	3245
25.0 - 50	341	5592

Heaters may be mounted in the horizontal or vertical air discharge configuration using factory optional supplied accessory mounting equipment or using special hardware facilities supplied by others.

After the installation is complete, replace the access panel.

Set the controls (thermostat, switch) at their desired control point and apply power to the unit.

Check for correct operation.

HORIZONTAL AIR DISCHARGE MOUNTING

Swivel hanger brackets may be used to suspend unit heaters from either the wall (Fig. 5) or the ceiling (Fig. 6). Attach hanger base "A" to top of heater with the four 5/16 x 18 cap screws and lockwashers (provided in envelope).

Attach main hanger frame "B" to wall or ceiling in desired location using lag screws "C" or other suitable attachments (supplied by others).

Lift heater into position inserting stud "D" through hole in main hanger frame and attach lock nut (provided in envelope) "E" tightening to within two turns of being tight.

Swivel heater to desired position, tighten lock nut.

VERTICAL AIR DISCHARGE MOUNTING
(Fig. 7)

Attach short angle brackets "A" to back of heater with four 5/16 x 18 capscrews "B", lockwashers "F". Be sure vertical leg of angle brackets face top and bottom of heater.

Attach inverted U frames "D" to short angle brackets with four 5/16 x 18 capscrews "E", washers "F", lockwashers "G" and nuts "H".

Attach long angle brackets "J" to inverted frames "D" with four 5/16 x 18 capscrews "K", washers "L", lockwashers "M" and nuts "N".

Attach heater and bracket assembly to ceiling in desired location using customer supplied equipment sufficient to support the assembly.

NOTE: When mounting heater using 5/16" all thread rod (by others) do not screw the rod more than ½" beyond the inside of the case.

5100 SERIES TECHNICAL DATA
TABLE 2

ELECTRICAL DATA

CATALOG NUMBER	KW RATING	BTU/HR (000)	HEATER/ MOTOR VOLTAGE	HEATER PHASE	CONTROL VOLTAGE	AMPS PER PHASE	BRANCH CIRCUIT PROTECTION SIZE (A)	SUPPLY WIRE SIZE 60°C AWG **
F1F5103	3.3	11.2	208	1	208	15.9	20	12
F2F5103	3.3	11.2	208	1	208	15.9	20	12
			208	3	208	9.2	15	14
HF1B5103	3.3/2.5	11.2/8.5	240/208	1	240/208	13.7/11.9	20/15	12/14
HF2B5103	3.3/2.5	11.2/8.5	240/208	1	240/208	13.7/11.9	20/15	12/14
			240/208	3	240/208	7.9/6.9	10/10	14/14
G1G5103	3.3	11.2	277	1	277	11.9	15	14
P3P5103CA1	3.3	11.2	480	3	24	4.0	15	14
F1F5105	5.0	17.1	208	1	208	24.1	35	8
F2F5105	5.0	17.1	208	1	208	24.1	35	8
			208	3	208	13.9	20	12
HF1B5105	5.0/3.7	17.1/12.8	240/208	1	240/208	20.9/18.1	30/25	10/10
HF2B5105	5.0/3.7	17.1/12.8	240/208	1	240/208	20.9/18.1	30/25	10/10
			240/208	3	240/208	12.1/10.4	20/15	12/14
G1G5105	5.0	17.1	277	1	277	18.1	25	10
P3P5105CA1	5.0	17.1	480	3	24	6.1	15	14
F2F5107CA1	7.5	25.6	208	1	24	36.1	50	6
			208	3	24	20.8	30	10
HF2B5107CA1	7.5/5.6	25.6/19.2	240/208	1	24	31.3/27.1	40/35	8/8
			240/208	3	24	18.1/15.6	25/20	10/12
G1G5107CA1	7.5	25.6	277	1	24	27.1	35	8
P3P5107CA1	7.5	25.6	480	3	24	9.1	15	14
F2F5110CA1	9.9	33.8	208	1	24	47.8	60	4
			208	3	24	27.8	35	8
HF2B5110CA1	10.0/7.5	34.1/25.6	240/208	1	24	41.6/36.1	60/50	4/6
			240/208	3	24	24/20.8	30/30	8/10
G1G5110CA1	10.0	34.1	277	1	24	36.1	50	6
P3P5110CA1	10.0	34.1	480	3	24	12.1	20	12
F3F5115CA1	15.0	51.2	208	3	24	41.7	60	4
HF3B5115CA1	15.0/11.2	51.2/38.4	240/208	3	24	36.1/31.3	50/40	6/8
P3P5115CA1	15.0	51.2	480	3	24	18.1	25	10
HF3B5120CA1	19.5/14.6	67.2/50.5	240/208	3	24	47.8/41.1	60/60	4/6
P3P5120CA1	20.0	68.3	480	3	24	24.1	35	8
F3F5125CA1	25.0	85.3	208	3	24	69.5	90	2
HF3B5125CA1	25.0/18.7	85.3/64.0	240/208	3	24	60.2/52.1	80/70	3/4
P3P5125CA1	25.0	85.3	480	3	24	30.1	40	8
F3F5130CA1	30.0	102.4	208	3	24	83.4	110	2*
HB3B5130CA1	30.0/22.5	102.4/76.8	240/208	3	24	72.3/62.5	100/80	2/3
P3P5130CA1	30.0	102.4	480	3	24	36.2	50	6
F3F5140CA1	40.0	136.5	208	3	24	111.2	150	1/0*
HF3B5140CA1	40.0/30.0	136.5/102.4	240/208	3	24	96.4/83.4	125/110	1*/2*
P3P5140CA1	39.0	133.1	480	3	24	47.0	60	4
F3F5150CA1	49.6	169.9	208	3	24	139.0	175	2/0*
HF3BB5150CA1	50.0/37.5	170.6/128.0	240/208	3	24	120.5/104.3	175/150	2/0*1/0*
P3P5150CA1	50.0	170.6	480	3	24	60.3	80	3
***U3H5105CA4	5.0	17.1	600-240	3	240	5.1	15	14
U3H5107CA4	7.5	25.6	600-240	3	240	7.7	15	14
U3H5110CA4	10.0	34.1	600-240	3	240	10.2	15	14
U3H5115CA4	15.0	51.2	600-240	3	240	15.5	20	12
U3H5120CA4	20	68.3	600-240	3	240	20.3	25	10
U3H5125CA4	25.0	85.3	600-240	3	240	24.5	35	8
U3H5130CA4	30.0	102.4	600-240	3	240	29.4	40	8
U3H5140CA4	40	136.5	600-240	3	240	39.8	50	6
U3H5150CA4	50	170.7	600-240	3	240	49.4	60	4

**Use Copper Conductors on All Heaters *Use 75°C Wire
***NOTE: THIS UNIT (ONLY) BUILT IN 7.5 & 10KW CASE SIZE

AIR DELIVERY DATA				FAN MOTOR DATA				
CFM at OUTLET	FPM at OUTLET	TEMP. RISE °F	HP	MOTOR RPM	MAX MTG. HEIGHT HOR	MAX MTG. HEIGHT VERT	AIR THROW (HORIZ)	WEIGHT LBS.
400	1030	26	1/125	1550	9	9	12 Ft.	25
400	1030	26	1/125	1550	9	9	12 Ft.	25
400	1030	26	1/125	1550	9	9	12 Ft.	25
400	1030	26	1/125	1550	9	9	12 Ft.	25
400	1030	26	1/125	1550	9	9	12 Ft.	25
400	1030	26	1/125	1550	9	9	12 Ft.	27
400	1030	40	1/125	1550	9	9	12 Ft.	25
400	1030	40	1/125	1550	9	9	12 Ft.	25
400	1030	40	1/125	1550	9	9	12 Ft.	25
400	1030	40	1/125	1550	9	9	12 Ft.	25
400	1030	40	1/125	1550	9	9	12 Ft.	25
400	1030	40	1/125	1550	9	9	12 Ft.	27
700	1000	34	1/50	1550	10	12	22 Ft.	50
700	1000	34	1/50	1550	10	12	22 Ft.	50
700	1000	34	1/50	1550	10	12	22 Ft.	50
700	1000	34	1/50	1550	10	12	22 Ft.	50
700	1000	45	1/50	1550	10	14	22 Ft.	50
700	1000	45	1/50	1550	10	14	22 Ft.	50
700	1000	45	1/50	1550	10	14	22 Ft.	50
700	1000	45	1/50	1550	10	14	22 Ft.	50
1100	1580	43	1/20	1550	11	20	32 Ft.	65
1100	1580	43	1/20	1550	11	20	32 Ft.	65
1100	1580	43	1/20	1550	11	20	32 Ft.	65
1100	1580	57	1/20	1550	12	18	32 Ft.	65
1100	1580	57	1/20	1550	12	18	32 Ft.	65
2000/1800	1300/1100	40/44	1/12	1550/1250	12	22	45 Ft.	120
2000/1800	1300/1100	40/44	1/12	1550/1250	12	22	45 Ft.	120
2000/1800	1300/1100	40/44	1/15	1550/1250	12	22	45 Ft.	120
2000/1800	1300/1100	47/53	1/12	1550/1250	12	20	40 Ft.	120
2000/1800	1300/1100	47/53	1/12	1550/1250	12	20	40 Ft.	120
2000/1800	1300/1100	47/53	1/15	1550/1250	12	20	40 Ft.	120
3100/2800	2000/1800	40/45	1/4	1550/1310	15	25	55 Ft.	120
3100/2800	2000/1800	40/45	1/4	1550/1310	15	25	55 Ft.	120
3100/2800	2000/1800	40/45	1/4	1550/1310	15	25	55 Ft.	120
3100/2800	2000/1800	51/56	1/4	1550/1310	15	22	50 Ft.	120
3100/2800	2000/1800	51/56	1/4	1550/1310	15	22	50 Ft.	120
3100/2800	2000/1800	51/56	1/4	1550/1310	15	22	50 Ft.	120
558	929	30	1/125	1300	9	9	12 Ft.	50
700	1000	34	1/50	1550	10	12	22 Ft.	50
700	1000	45	1/50	1550	10	14	22 Ft.	50
1100	1580	43	1/20	1550	11	20	32 Ft.	65
1100	1580	57	1/20	1550	12	18	37 Ft.	65
2000/1800	1300/1100	40/44	1/12	1550/1250	12	22	45 Ft.	120
2000/1800	1300/1100	47/53	1/12	1550/1250	12	20	40 Ft.	120
3100/2800	2000/1800	40/45	1/4	1550/1310	15	25	55 Ft.	120
3100/2800	2000/1800	51/56	1/4	1550/1310	15	22	50 Ft.	120

TROUBLE SHOOTING CHART

SYMPTOM	POSSIBLE CAUSE(S)	CORRECTIVE ACTION
Thermostat calls for heat, but heater does not function	1. Open (blown) fuse	1. Replace fuses, check for cause. (see Replacement Parts List for fuse size)
	2. INCORRECT WIRING	2. CHECK WIRING CONNECTIONS
	3. Thermal cut-out open, deenergizing heater element and control circuit.	3. Check for the following: Correct supply volts & phase Correct control wiring (heater control must be thru thermostat control wiring section only) Power interruption to heater during heater operation Restriction of air around heater 1-5 minute fan purge after thermostat off
Fan motor runs "hot"	1. Dust accumulation or excessive dirt on motor	1. Clean fan motor and casing of grease and oil accumulation.
	2. Dirt accumulation	2. Clean louvers and between heating elements
	3. Motor needs lubrication.	3. See Maintenance.
Fan motor runs, but no heat.	1. Element contactor not operating correctly.	1. Check wiring for open circuit. Replace contactor if defective.
	2. Element fuse blown.	2. Replace fuses, check for cause. (See Replacement Parts List for fuse size.)

MAINTENANCE

CAUTION: Make certain that the power source is disconnected before attempting to service or disassemble any component. If the power disconnect is out of the line of sight, lock it in the OPEN position and tag to prevent the application of power.

ELECTRICAL

Once a year inspect the control panel wiring to make certain insulation is intact and all connections are tight. Inspect all heater and relay contacts. If the contacts appear badly pitted or burned, replace the contactor/relay.

For proper circuit protection during operation, the correct size fuse must be used. The parts list contains the fuse size for all units.

CLEANING

Clean the unit casing, fan and motor once a year. A dirty motor will tend to run hot and eventually will be damaged internally. Any rust spots on the casing should be cleaned and repainted.

LUBRICATION

All units up to 20KW have fan motors that are permanently lubricated so that only occasional cleaning is required. Units above 20KW have fan motors lubricated for 5 years of continuous duty or 10 years of intermittent operation. When required, remove the oil access plug on back of heater at motor intake grill, open oil cap, fill with S.A.E. No. 10 electric motor oil, replace plugs and access plug.

WIRING DIAGRAM SCHEDULE

DIAGRAM NUMBER	MODEL CODE (PREFIX)	MODEL CODE (SIZE AND CONTROL SYSTEM)		
WD5101	FIF-GIG-HFIB	5103N	5105N	
WD5104	GIG	5107CAIL	5110CAIL	
WD5106	F2F-HF2B	5103N	5105N	
WD5113	F2F	5107CAIL	5110CAIL	
WD5114	HF2B	5107CAIL	5110CAIL	
WD5138	P3P	5103CAIN	5105CAIN	5107CAIN
	P3P	5110CAIN	5115CAIN	5120CAIN
WD5121	F3F	5115CAIL		
WD5122	HF3B	5115CAIL	5120CAIL	
WD5125	F3F	5125CAIL	5130CAIL	5140CAIL
	F3F	5150CAIL		
WD5126	HF3B	5125CAIL	5130CAIL	5140CAIL
	HF3B	5150CAIL		
WD5139	P3P	5125CAIN	5130CAIN	
WD5140	P3P	5140CAIN		
WD5141	P3P	5150CAIN		
WD5142	U3H	5105CA4N	5107CA4N	5110CA4N
		5115CA4N	5120CA4N	
WD5143	U3H	5125CA4N	5130CA4N	5140CA4N
		5150CA4N		

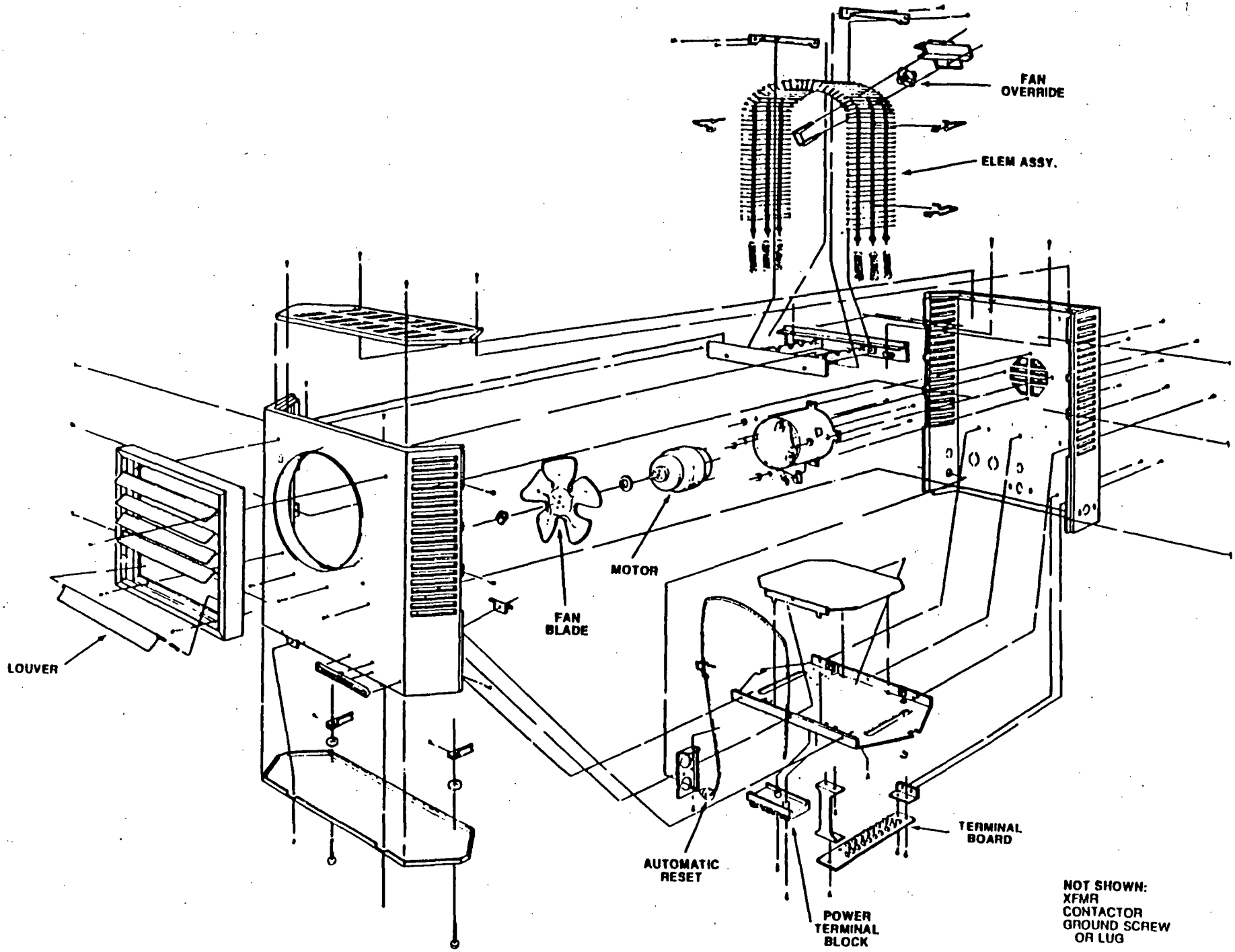

PARTS DRAWING

Attn: Mike P3P5115CAIN

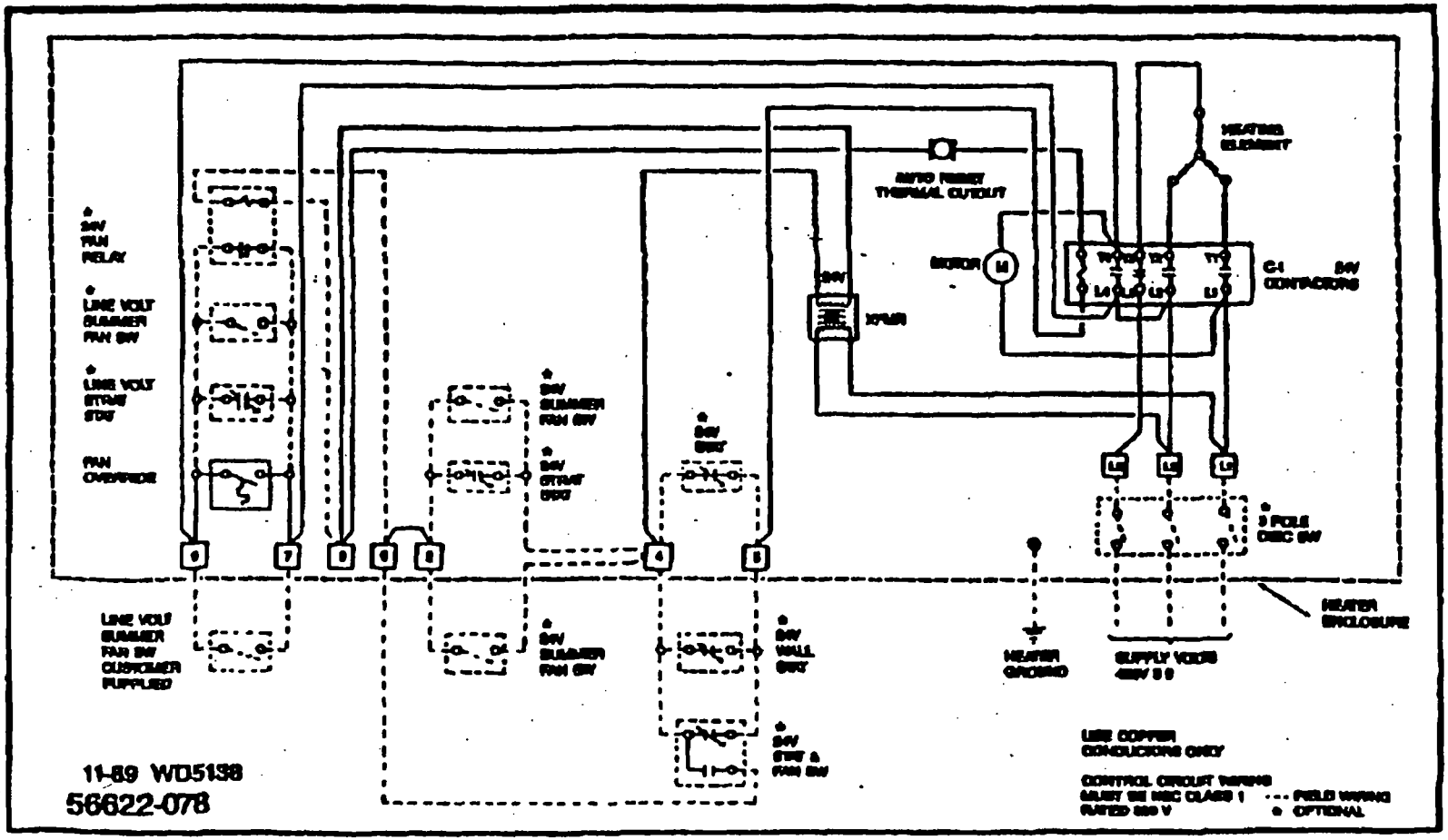

JUN 19 '97 16:10 423 477 3987 PAGE.01

PARTS LIST
CATALOG NUMBERS

REVISED
3/91

HEATER MODEL	MOTOR	ELEMENT ASSEMBLY	AUTOMATIC RESET	FAN OVERRIDE	XFMR	CONTACTOR	POWER TERMINAL BLOCK
F1F5103N	56562-012	60715-001	57640-006	56811-001			56815-001
F2F5103N	56562-012	60715-011	57640-006	56811-001			56815-001
HF1B5103N	56562-017	60715-002	57640-006	56811-001			56815-001
HF2B5103N	56562-017	60715-012	57640-006	56811-001			56815-001
G1G5103N	56562-016	60715-007	57640-006	56811-001			56815-001
P3P5103CA1N	56562-018	60715-008	57640-006	56811-001	60719-006	50378-016	56815-001
F1F5105N	56562-012	60715-003	57640-006	56811-001			56815-001
F2F5105N	56562-012	60715-004	57640-006	56811-001			56815-001
HF1B5105N	56562-017	60715-005	57640-006	56811-001			56815-001
HF2B5105N	56562-017	60715-006	57640-006	56811-001			56815-001
G1G5105N	56562-016	60715-009	57640-006	56811-001			56815-001
P3P5105CA1N	56562-018	60715-010	57640-006	56811-001	60719-006	50378-016	56815-001
F2F5107CA1L	56823-011	56954-004	57640-003	56811-001	60719-001	50378-022	56816-001
HF2B5107CA1L	56823-012	56954-006	57640-003	56811-001	60719-001	50378-013	56816-001
G1G5107CA1L	56824-002	56954-001	57640-003	56811-001	60719-005	50378-013N	56815-001
P3P5107CA1N	56824-011	56954-002	57640-003	56811-001	60719-006	50378-016	56815-001
F2F5110CA1L	56823-011	56954-003	57640-003	56811-001	60719-001	50378-031	56816-001
HF2B5110CA1L	56823-012	56954-004	57640-003	56811-001	60719-001	50378-031	56816-001
G1G5110CA1L	56824-002	56954-007	57640-003	56811-001	60719-005	50378-022	56816-001
P3P5110CA1N	56824-011	56954-008	57640-003	56811-001	60719-006	50378-016	56815-001
F3F5115CA1L	56825-001	56954-009	57640-004	56811-001	60719-001	50378-031	56816-001
HF3B5115CA1L	56825-002	56954-010	57640-004	56811-001	60719-001	50378-022	56816-001
P3P5115CA1N	56825-003	56954-011	57640-004	56811-001	60719-006	50378-016	56815-001
HF3B5120CA1L	56825-002	56954-012	57640-004	56811-003	60719-001	50378-031	56816-001
P3P5120CA1N	56825-003	56954-013	57640-004	56811-003	60719-006	50378-016	56815-001

HEATER MODEL	MOTOR	ELEMENT ASSY	AUTOMATIC RESET	FAN OVERRIDE	XFMR	S.D. FUSE BLOCK 2 RQD	S.D. FUSE 6 RQD	CONTACTOR 2 RQD	POWER TERMINAL BLOCK	FAN SPEED SW
F3F5125CA1L	56943-001	56954-017	57640-005	56811-002	60719-009	50836-012	41280-002	50378-025	57097-001	57112-00
HF3B5125CA1L	56943-002	56954-018	57640-005	56811-002	60719-009	50836-012	41280-007	50378-025	57097-001	57112-00
P3P5125CA1N	56944-001	56954-019	57640-005	56811-002	60719-012	—	—	50378-016	57098-001	57090-00
F3F5130CA1L	56943-001	56954-020	57640-005	56811-002	60719-009	50836-003	41280-008	50378-025	57097-001	57112-00
HF3B5130CA1L	56943-002	56954-021	57640-005	56811-002	60719-009	50836-012	41280-002	50378-025	57097-001	57112-00
P3P5130CA1N	56944-001	56954-022	57640-005	56811-002	60719-012	—	—	50378-016	57098-001	57090-00
F3F5140CA1L	56945-001	56954-023	57640-005	56811-002	60719-009	50836-003	41280-004	50378-025	57097-001	57112-00
HF3B5140CA1L	56945-002	56954-024	57640-005	56811-002	60719-009	50836-003	41280-003	50378-025	57097-001	57112-00
P3P5140CA1N	56946-001	56954-025	57640-005	56811-002	60719-012	—	—	50378-016	57098-001	57090-00
F3F5150CA1L	56945-001	56954-026	57640-005	56811-003	60719-009	50836-003	41280-005	50378-034	57097-001	57112-00
HF3B5150CA1L	56945-002	56954-027	57640-005	56811-003	60719-009	50836-003	41280-004	50378-025	57097-001	57112-00
P3P5150CA1N	56946-001	56954-028	57640-005	56811-003	60719-012	57110-001	57111-008	50378-016	57097-001	57090-00

KW	FAN BLADE	TERMINAL BOARD	GROUND CONN.	MOTOR CAPACITOR	LOUVER
3.3-5	56806-001	56809-001	1458	—	(5) 56986-001
7.5-10	51554-002	56809-001	1458	—	(7) 56986-003
15-20	56813-001	56809-001	1458	—	(7) 56986-003
25-30	57114-001	56809-001	3981	57100-001	(9) 56987-001
40-50	57115-001	56809-001	3981	57100-001	(9) 56987-001

PARTS LIST — 600 VOLT MODELS

	U3H5105CA4N	U3H5107CA4N	U3H5110CA4N	U3H5115CA4N	U3H5120CA4N
Motor	56562-017	56823-012	56823-012	56825-002	56825-002
Element Assy.	56954-029	56954-030	56954-031	56954-032	56954-035
Auto. Reset Limit	57640-003	57640-003	57640-003	57640-004	57640-004
Fan Override	56811-001	56811-001	56811-001	56811-001	56811-003
XFMR	57641-003(100VA)	57641-001(150VA)	57641-001	57641-002(300VA)	57641-002
Contactor	50378-018	50378-018	50378-018	50378-018	50378-018
Power Trml Block	56815-001	56815-001	56815-001	56815-001	56815-001
Fan Blade	51554-002	51554-002	51554-002	56813-001	56813-001
Terminal Board	56809-001	56809-001	56809-001	56809-001	56809-001
Ground Conn.	1458	1458	1458	1458	1458
Louver	56986-003(7)	56986-003(7)	56986-003(7)	56986-003(7)	56986-003(7)

	U3H5125CA4N	U3H5130CA4N	U3H5140CA4N	U3H5150CA4N
Motor	56943-002	56943-002	56945-002	56945-002
Element Assy.	56954-033	56954-034	56954-036	56954-037
Auto. Reset Limit	57640-005	57640-005	57640-005	57640-005
Fan Override	56811-002	56811-002	56811-002	56811-003
XFMR	57641-001	57641-001	57641-004(350VA)	57641-004
Contactor	50378-018(2)	50378-018(2)	50378-018(2)	50378-018(2)
Power Trml Block	57098-001	57098-001	57098-001	57098-001
Fan Blade	57114-001	57114-001	57115-001	57115-001
Terminal Board	56809-001	56809-001	56809-001	56809-001
Ground Conn.	3981	3981	3981	3981
Louver	56986-004(9)	56986-004(9)	56986-004(9)	56986-004(9)
XFMR PRI Fuse Block	57643-001	57643-001	57643-001	57643-001
XFMR PRI Fuse (2)	57644-001(2)	57644-001(2)	57644-001(2)	57644-001(2)
Fan Speed SW	57112-001	57112-001	57112-001	57112-001
Motor Capacitor	57100-001	57100-001	57100-001	57100-001

TPI Corporation

LIMITED WARRANTY

oducts manufactured by TPI Corporation are warranted to the original consumer to be free from defects in material and workmanship for twelve (12) months from the original date of purchase. The TPI warranty does not cover products modified outside our factory, damage or failure caused by acts of God, abuse, misuse, use on other than rated voltage, abnormal usage, faulty installation, failure to provide suggested maintenance procedures enclosed with the product, improper maintenance or any repairs other than these provided by an authorized TPI Corporation service center.

THERE ARE NO OBLIGATIONS OR LIABILITIES ON THE PART OF TPI CORPORATION FOR CONSEQUENTIAL DAMAGES ARISING OUT OF OR IN CONNECTION WITH THE USE OR PERFORMANCE OF THE PRODUCT OR OTHER INDIRECT DAMAGES WITH RESPECT TO LOSS OF PROPERTY, REVENUES, OR PROFIT, OR COSTS OF REMOVAL, INSTALLATION OR REINSTALLATION.

ALL IMPLIED WARRANTIES WITH RESPECT TO TPI PRODUCTS, INCLUDING IMPLIED WARRANTIES FOR MERCHANTABILITY AND IMPLIED WARRANTIES FOR FITNESS, ARE LIMITED IN DURATION TO TWELVE (12) MONTHS FROM ORIGINAL DATE OF PURCHASE, EXCEPT THOSE PRODUCTS OR PARTS OF PRODUCTS WHICH ARE WARRANTED FOR LONGER PERIODS. ON SUCH PRODUCTS OR PARTS OF PRODUCTS ALL IMPLIED WARRANTIES FOR MERCHANTABILITY AND FITNESS ARE LIMITED TO THE DURATION OF THE EXTENDED WARRANTY PERIOD THEREON.

Some states do not allow the exclusion or limitation of incidental or consequential damages and some states do not allow limitations on how long an implied warranty lasts, so the above exclusions or limitations may not apply to you.

During the warranty period, TPI Corporation will, at its sole option, repair or replace any defective parts or products returned, freight prepaid, to the TPI Corporation factory or such other location as TPI Corporation may designate. Returned products must be packaged carefully and TPI Corporation shall not be responsible for damage in transit. When returning parts, the owner must provide the model number of the product and nature of difficulty being experienced. This warranty does not obligate TPI Corporation to bear the cost of labor in replacing any assembly, unit or component part thereof, nor does the company assume any liability for secondary charges, expenses for installing or removal, Freight or damages. There will be charges rendered for product repairs made after our warranty period has expired. Proof of purchase, including date, must accompany request for in-warranty service. In any event, TPI Corporation's maximum liability shall not in any case exceed the list price for the product claimed to be defective. This warranty gives to you specific legal rights and you may have other rights which may vary from state to state. For the name of your nearest authorized TPI Corporation service center, please write to TPI Corporation, P.O. Box 4973, Johnson City, Tennessee, 37602.

In addition to the Limited Warranty stated above covering general products, TPI Corporation extends this warranty on the following listed products, which are warranted to the original consumer from the original date of purchase for the total time periods indicated herein below:

HEATING PRODUCTS	
1. Elements in 188 Series Portable	Life of Heater
All Other Portable Heater Elements	10 years
2. Elements in Baseboards	10 year
3. Elements in Wall Heaters	1 year
4. All Other Products	1 year

TPI Corporation
P.O. Box 4973
Johnson City, TN 37602
(423)477-4131
(423)477-0064

Please read and save these instructions. Read carefully before attempting to assemble, install, operate or maintain the product described. Protect yourself and others by observing all safety information. Failure to comply with instructions could result in personal injury and/or property damage! Retain instructions for future reference.

Breezeway Panel Fans Direct and Belt Driven

Gottw: Carl Hummel

TYPE P

TYPE BPL

TYPE BP

TYPE BBK

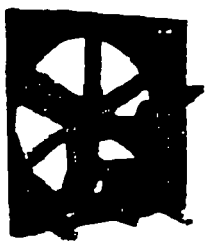

TYPE BC

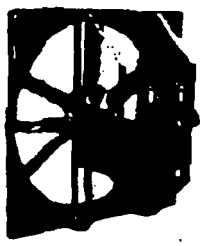

TYPE BAT

Receiving, Handling and Storage

Penn fans are carefully inspected before leaving the factory. When the unit is received, inspect the carton for any signs of tampering. Inspect the unit for any damage that may have occurred during transit and check for loose, missing or damaged parts. Mishandled units can void the warranty provisions. If units are damaged in transit, it is the responsibility of the receiver to make all claims against the carrier. Penn Ventilation Co., Inc. is not responsible for damages incurred during shipment.

Avoid severe jarring and/or dropping. Handle units with care to prevent damage to components or finishes. If the unit is scratched due to mishandling, the protective coating may be damaged. Long-term storage requires special attention. Store units on a level, solid surface, preferably indoors. If outside storage is necessary, protect the units against moisture and dirt by encasing the cartons in plastic or in some similar weatherproof material. Periodically inspect units and rotate wheels to spread bearing lubricant. If unit will be stored for extended time, remove V-belts. V-belts which remain under tension in a stationary position for extended periods are likely to have reduced operating life.

Installation

INSTALLING THE PANEL FAN:

Wall openings must be square and should be 1/4" to 1/2" greater than the outside dimension of the panel fan housing, when recessed within the wall. Level and securely anchor the fan to the wall through holes pre-drilled in the mounting flange. Use the type, size and number of fasteners suitable to the unit size and wall construction. If the contractor removes ventilator parts by placing all spacers, washers, nuts, bolts, fasteners and components exactly as they were prior to removal. Tighten and secure all fasteners.

POSITIONING AND RUNNING POWER LINES:

Power is normally brought from within the building through proper conduit lines to the wall opening, and in turn to the (disconnect switch, if furnished, and) motor.

INSTALLING THE WALL SHUTTER:

When required, level and fasten the wall shutter through the mounting holes provided in the shutter mounting flange. Consult Figure 1 for the proper mounting arrangements. Secure the shutter to the wall opening without undo twisting which may distort the frame. Check for free operation. If shutters are motor operated type, ascertain the proper voltage is present on motor terminals.

The fan is now ready for service.

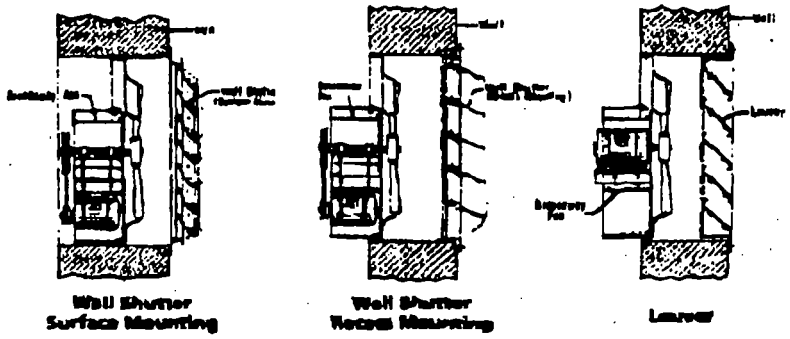

Wall Shutter Surface Mounting

Wall Shutter Recess Mounting

Louver

Figure 1 -Typical Mounting Arrangements

SPECIAL PURPOSE SYSTEMS

Explosive, corrosive, high temperatures, etc., may require special construction, inspection and maintenance. It is necessary to observe the fan manufacturer's recommendations and limitations concerning the type of material to be handled by the fan and its application to special conditions.

MOTORS

All motors are checked prior to shipment. However, if motor defects develop while under warranty, contact the nearest authorized service station of the motor manufacturer. Exchange, repair or replacement will be provided on a no charge basis if the motor is defective within the warranty period. DO NOT RETURN DEFECTIVE MOTORS TO PENN VENTILATION.

⚠WARNING ***Motor guarantee is void unless overload protection is provided in motor wiring circuit.***

During the first eight (8) hours of operation, check the fan periodically for excessive vibration or noise. At this time, also check motor input current and motor bearing temperatures to insure that they do not exceed manufacturer's recommendations. After eight hours of satisfactory operation, shut down the fan and lock out the electrical power to check the following items and adjust if necessary:

a. All set-screws, keys and fasteners.

b. Drive coupling alignment.

c. V-belt alignment.

d. V-belt tension.

Maintenance

Do not attempt maintenance on fan until the electrical supply has been completely disconnected. If a disconnect switch has not been provided, remove all fuses from the circuit and lock the fuse panel so they cannot accidentally be replaced.

Lubrication is a primary maintenance responsibility. Check all bearings periodically. Inspect V-belts for tightness. If the fan is installed in a corrosive or dirty atmosphere, periodically clean the impeller, inlet and other moving parts.

FAN SHAFT LUBRICATION.

Fan shaft bearing pillow blocks are furnished in either the prelubricated sealed-for-life type or the greasable type depending on what was ordered. The prelubricated type requires no servicing for 7 to 10 years of normal use and the greasable type are factory greased eliminating the need for greasing initially. Follow the lubricating schedule recommended by the factory. When required, apply grease while the shaft is rotating. This practice should not supersede any safety considerations.

⚠ CAUTION ***Use low pressure grease guns only. High pressure guns tend to blow out or unseat bearing seals, leaving the bearing open to collect grime, dust and foreign particles.***

LUBRICATION SCHEDULE:

a. Under average conditions where ambient temperatures do not exceed 120 degrees F., lubrication is required 1 to 2 times a year.

b. Under dirt laden atmospheres or where there is a temperature range of 120° F to 150° F, lubrication is required from 3 to 6 times a year.

c. Under extreme temperature conditions and extremely dirty atmospheres, lubrication should be at least once or twice a month.

RECOMMENDED LUBRICANTS

BP	LS-EP-1	Below 32° F. (0 C.)
Gulf	Gulfcrown EP-1	
Imperial oil	Unirex EP-1	
Shell	Alvania R-1	
Texaco BP	Regal AFB2 Energrease . MPMK11	32° F. to 150° F. (0° C. to 66° C.)
Gulf	Gulfcrown EP-2	
Imperial Oil	Unirex EP-2	
Shell	Alvania R-3	
Sun Oil	Sun Prestige 42	
Texaco	Regal AFB2	

MOTOR LUBRICATION.

In general, standard motors are furnished with prelubricated, sealed-for-life ball bearings which require no lubrication for 7 to 10 years of normal service. Where motors have been ordered with greasable bearings, these bearings are factory lubricated and require no attention for one year under normal conditions. If grease relief fittings are provided, remove them when performing maintenance to allow grease to flow out. Whenever possible, apply grease while the motor is running. This practice should not supersede any safety considerations. DO NOT OVERGREASE, as most lubricants deteriorate motor windings, thereby reducing motor life.

Trouble Shooting Checklist

SYMPTOM	POSSIBLE CAUSE(S)	CORRECTIVE ACTION
Inoperative Fan	1. Electricity Off 2. Motor wiring wrong or defective	3. V-belt Broken 4. Pulley Loose
Insufficient airflow	1. Wrong Rotation 2. Belt Slipping 3. Damper Closed	4. Parts Misaligned 5. System Effect
Mechanical Noise	1. Loose Impeller, housing, belts, pulley or bearings 2. Parts Misaligned	3. Foreign Material 4. Unbalanced Impeller

Manufacturer's Declaration of Conformity

Manufacturer:	Isco, Inc. Environmental Division 531 Westgate Blvd. Lincoln, NE 68528 USA
Description of Equipment:	Model FR Sampler 6700FR 3700FR 3710FR
Operating Voltage:	230 VAC 50 HZ 1ϕ
Council Directive(s):	89/336/EEC Electromagnetic Compatibility Directive
Year CE Mark Affixed:	1996
Standards Applied:	EN 55011 Group 1, Class A Limits and methods of measurement of radio disturbance characteristics of industrial, scientific, and medical radio-frequency equipment, March 1991. EN 50082-1 Electromagnetic Compatibility Generic immunity - Part 1: Residential, commercial and light industry, January 1992
Isco Representatives:	Douglas M. Grant President, COO Environmental Division General Manager Kurt Maring European Sales and Marketing Manager Isco Europe AG

We, the undersigned, hereby declare that the equipment specified above conforms to the above Directive(s) and Standard(s).

Douglas M. Grant

Douglas M Grant
Signature

15 August 1996
Date

Kurt Maring

Signature

15 Aug 1996
Date

U.S. EPA REGION IV

SDMS

Unscannable Material Target Sheet

DocID: 10728056 Site ID: SCD003354412

Site Name: Sangamo Weston

Nature of Material:

Map:	☐	Computer Disks:	☐
Photos:	☐	CD-ROM:	☐
Blueprints:	☐	Oversized Report:	☐
Slides:	☐	Log Book:	☐

Other (describe): 6' DD x 10' SS Z1 (1B, D1)
Recirculation Tank

Amount of material: _____

* Please contact the appropriate Records Center to view the material *