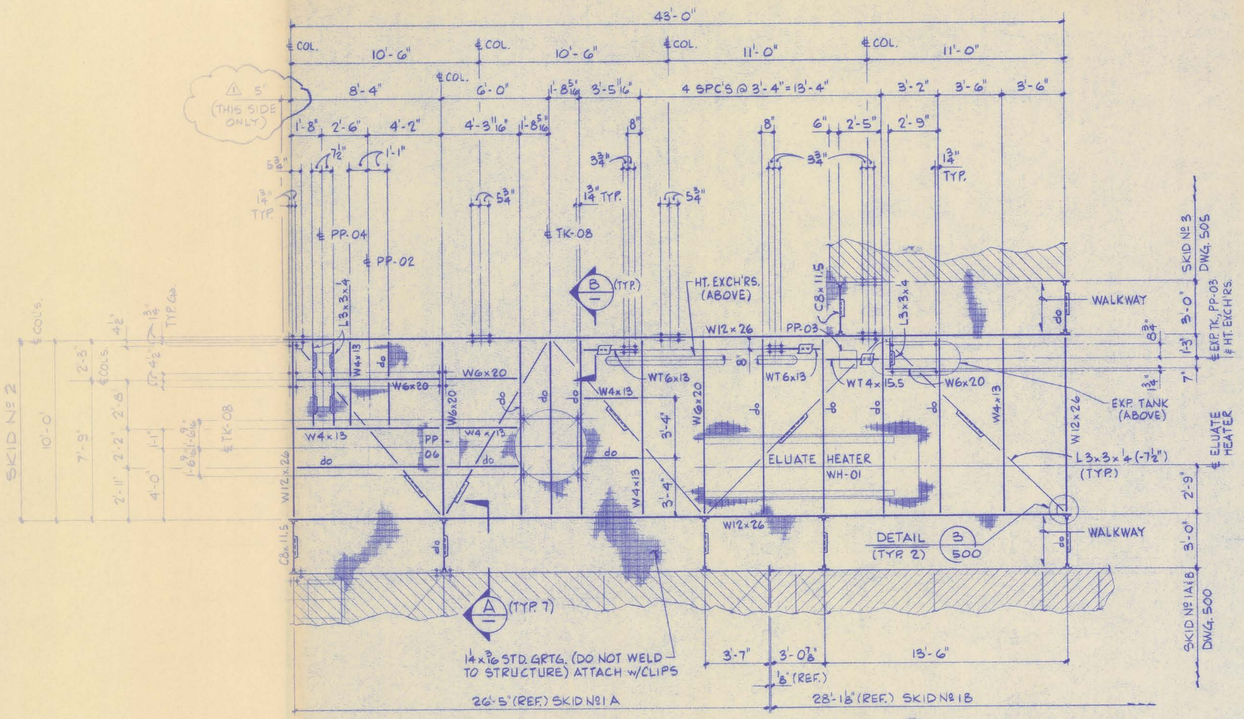

SKID Nº 2 & 3'-0" WALKWAYS ~ PLATFORM PLAN @ EL. 100'-1¼" (T.O.S. -1¼" U.N.)

SCALE: ¼" = 1'-0"

NOTE: ALL HOLES TO BE 13/16" ϕ

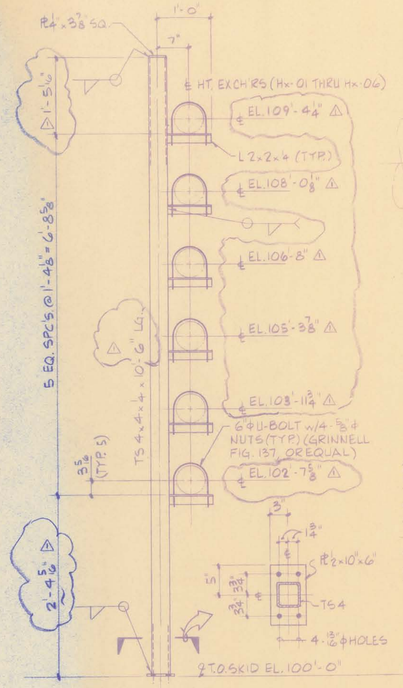

HEAT EXCHANGER SUPPORT

(2 REQ'D.) SCALE: ¾" = 1'-0"

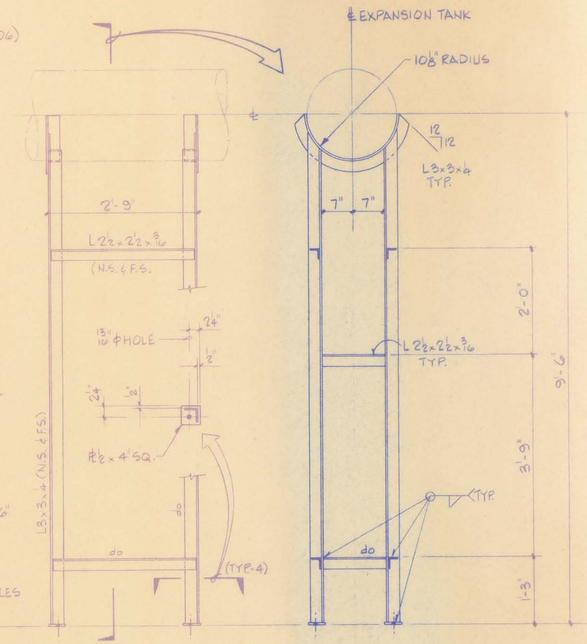

EXPANSION TANK SUPPORT

(ONE REQ'D.) SCALE: ¾" = 1'-0"

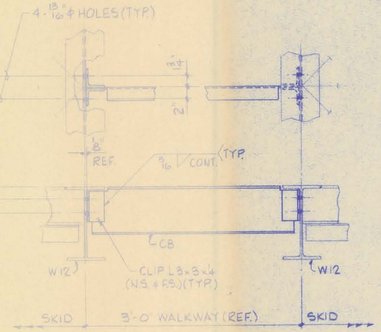

SECTION A

SCALE: 1" = 1'-0"

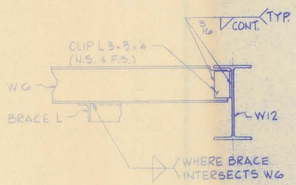

SECTION B

SCALE: 1" = 1'-0"

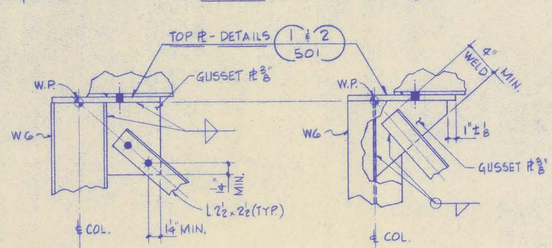

DETAIL 5 / 501

SCALE: 1½" = 1'-0"

DETAIL 6 / 501

SCALE: 1½" = 1'-0"

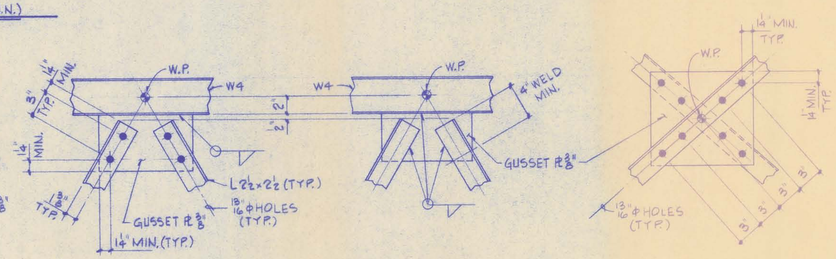

DETAIL 7 / 501

SCALE: 1½" = 1'-0"

DETAIL 8 / 501

SCALE: 1½" = 1'-0"

DETAIL 9 / 501

SCALE: 1½" = 1'-0"

DETAIL 10 / 501 & 500

SCALE: 1½" = 1'-0"

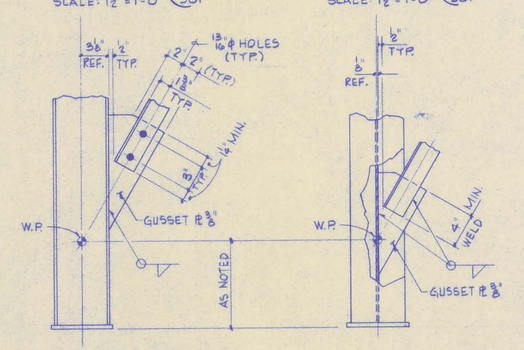

DETAIL 11 / 501

SCALE: 1½" = 1'-0"

DETAIL 12 / 501 & 500

SCALE: 1½" = 1'-0"

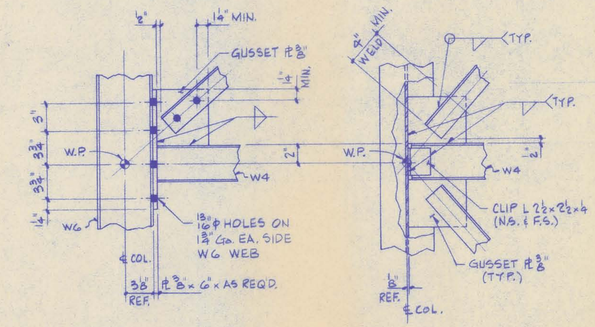

DETAIL 13 / 501

SCALE: 1½" = 1'-0"

DETAIL 14 / 501

SCALE: 1½" = 1'-0"

ISSUED FOR CONSTRUCTION

DATE 8-15-89

SIGNED D. S.

	BY	DATE
DESIGN		
DRAWN	V. ROJAS	8-8-89
CHKD	W. JENSEN	8-15-89
APPVD	D. S.	8/15
APPVD		
APPVD		
DATE PRINTED		

SEP 1 1989

GWALIA U.S.A LIMITED

BARITE HILL PROJECT

STRUCTURAL - PLAN

SKID Nº 2 (STRIPPING)

SSI SCOTIA INC. Salt Lake City, Utah

SCALE AS NOTED

DRAWING NUMBER 89-0635-502

ACCT. NO.

REVISIONS

NO	DATE	BY	CHK	DESCRIPTION
1	8/15	DS		ISSUED FOR CONST.
2	8-29	WC		MISC. CHG'S @ HT. EXCH'R. SUPPORT EXTENDED ONE COL. OF W12 @ SKID Nº 2

REFERENCES

DWG. NO.	TITLE