Hilton

Weston

2000 Existing Conditions

2001 Preparatory Grading, Erosion & Sedimentation Control Plan

2002 E&S Control Details/Notes

May 2000

Note ALB?

~~Visible Barrier~~ wrong.

~~delete fence.~~

~~TEMP SP~~

~~0.03%?~~

~~901 "Cover"~~

Reservations: www.hilton.com or 1 800 HILTONS

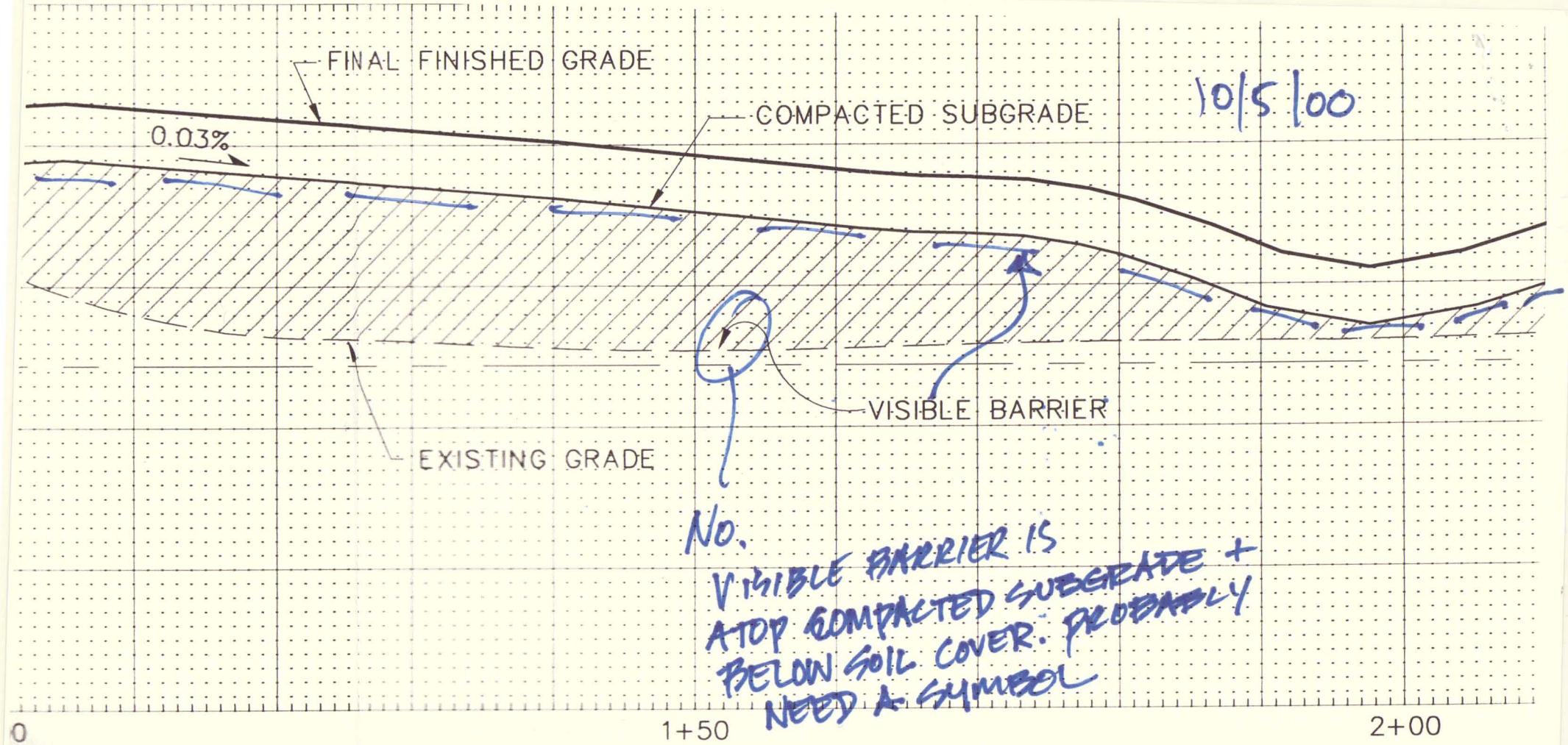
FINAL FINISHED GRADE
COMPACTED SUBGRADE
10/5/00
0.03%
VISIBLE BARRIER
EXISTING GRADE
No.
VISIBLE BARRIER IS
ATOP COMPACTED SUBGRADE +
BELOW SOIL COVER. PROBABLY
NEED A SYMBOL
0
1+50
2+00

SECTION 2+50

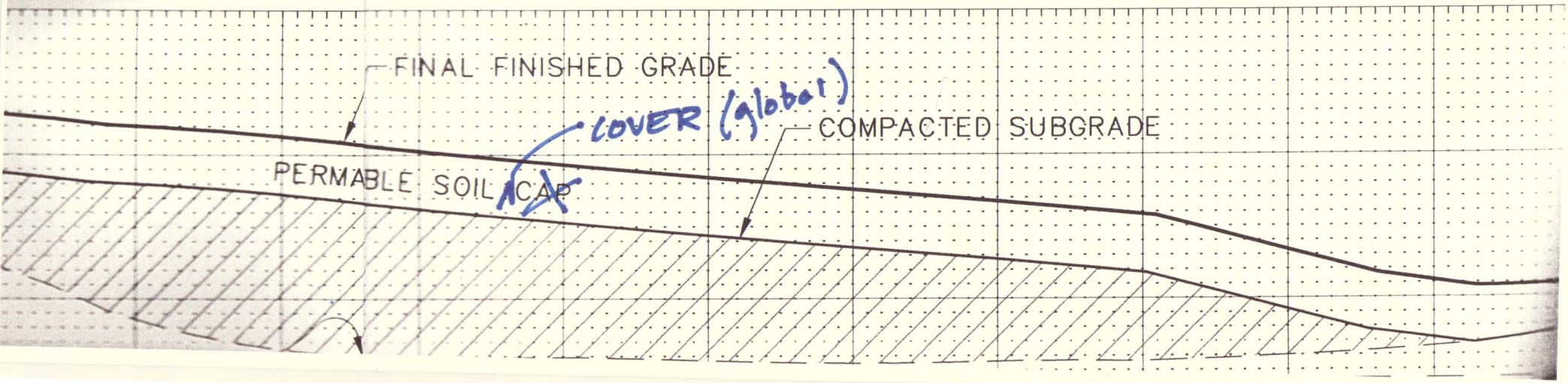
FINAL FINISHED GRADE
COVER (global)
COMPACTED SUBGRADE
PERMABLE SOIL CAP

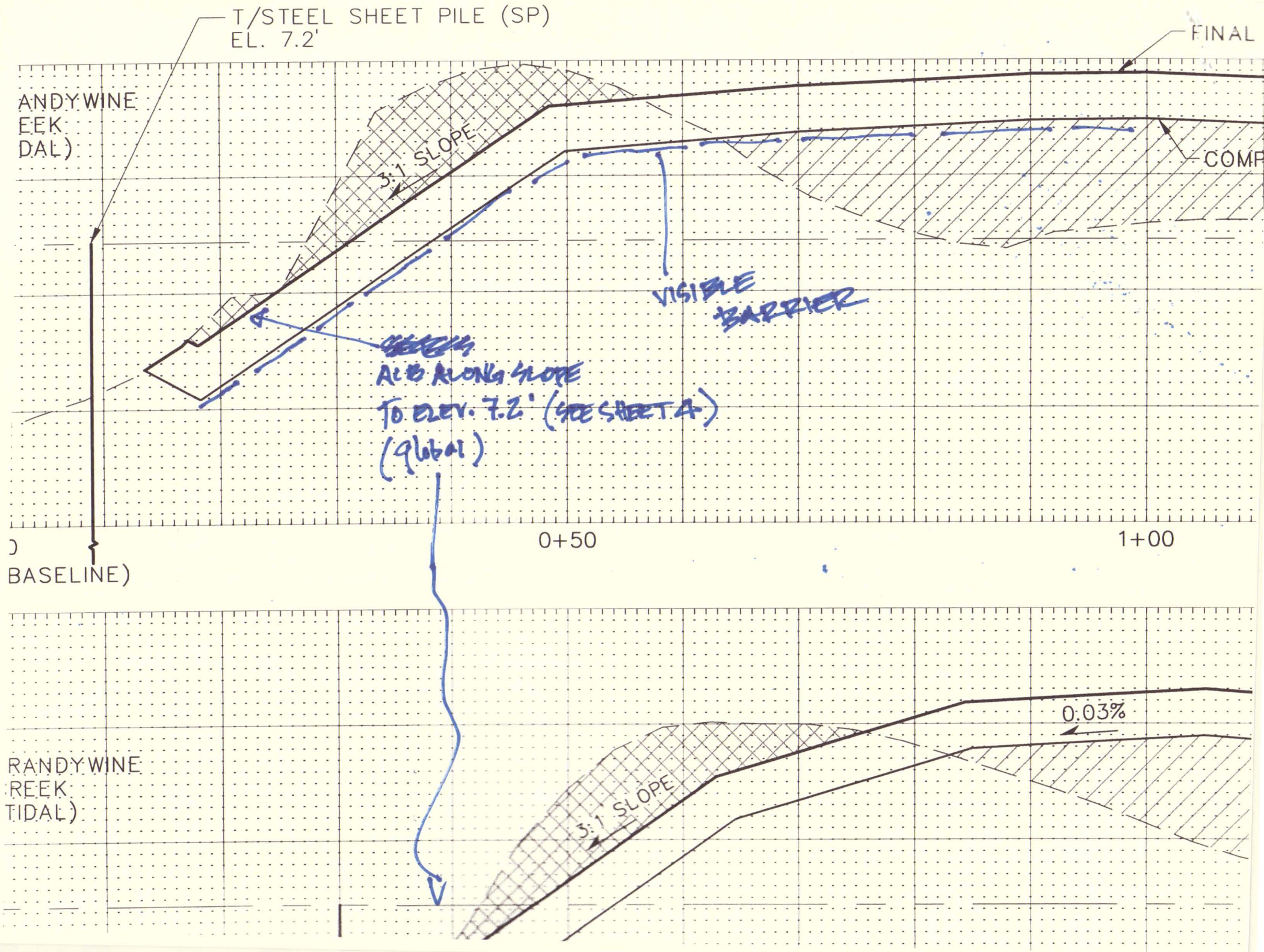
T/STEEL SHEET PILE (SP)
EL. 7.2'
FINAL
ANDYWINE
EEK
DAL)
3:1 SLOPE
COMP
VISIBLE
BARRIER
ALB ALONG SLOPE
TO ELEV. 7.2' (SEE SHEET 4)
(global)
0+50
1+00
BASELINE)
RANDYWINE
REEK
TIDAL)
0.03%
3:1 SLOPE

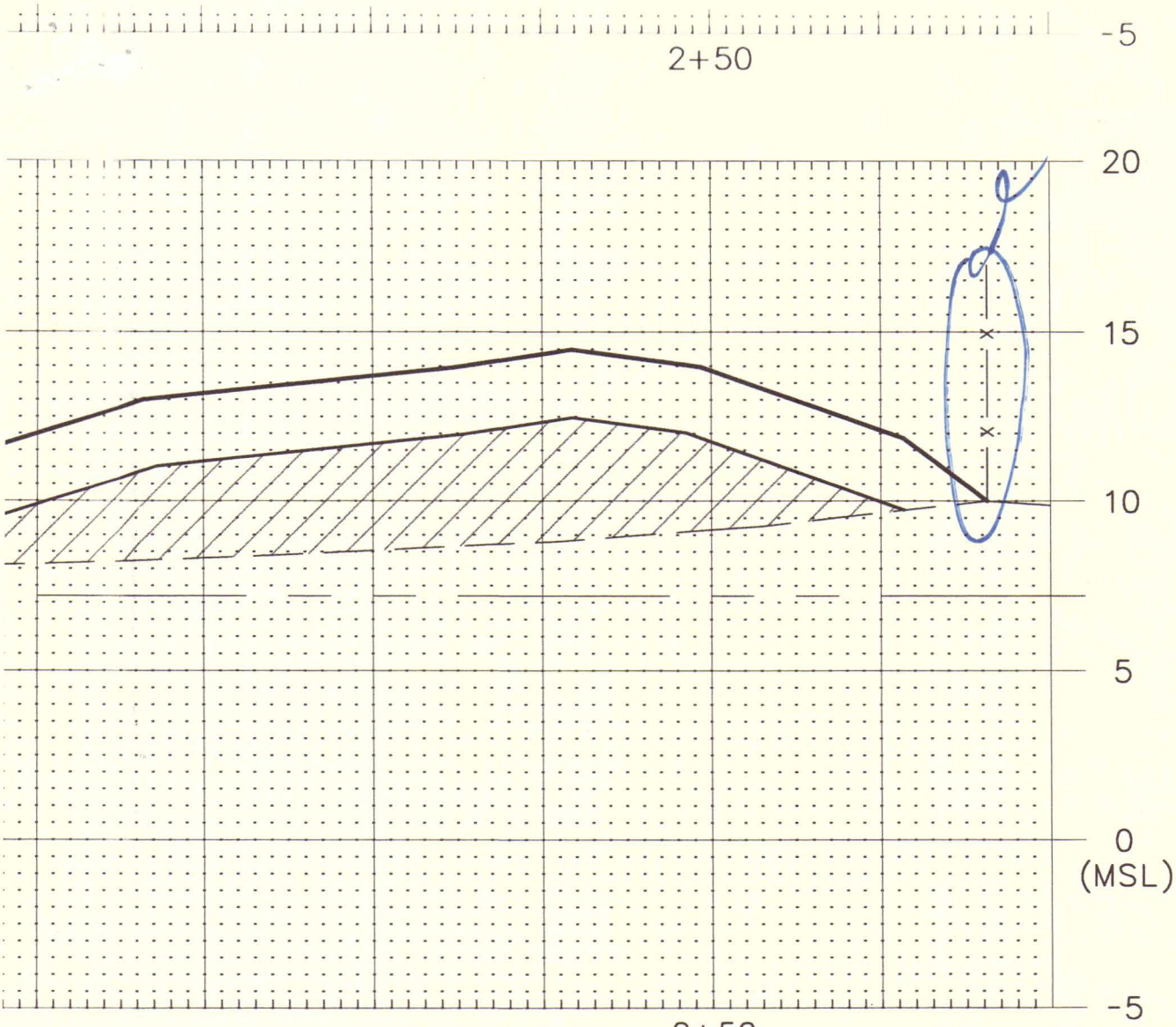
2+50
-5
20
15
10
5
0
(MSL)
-5
2+50

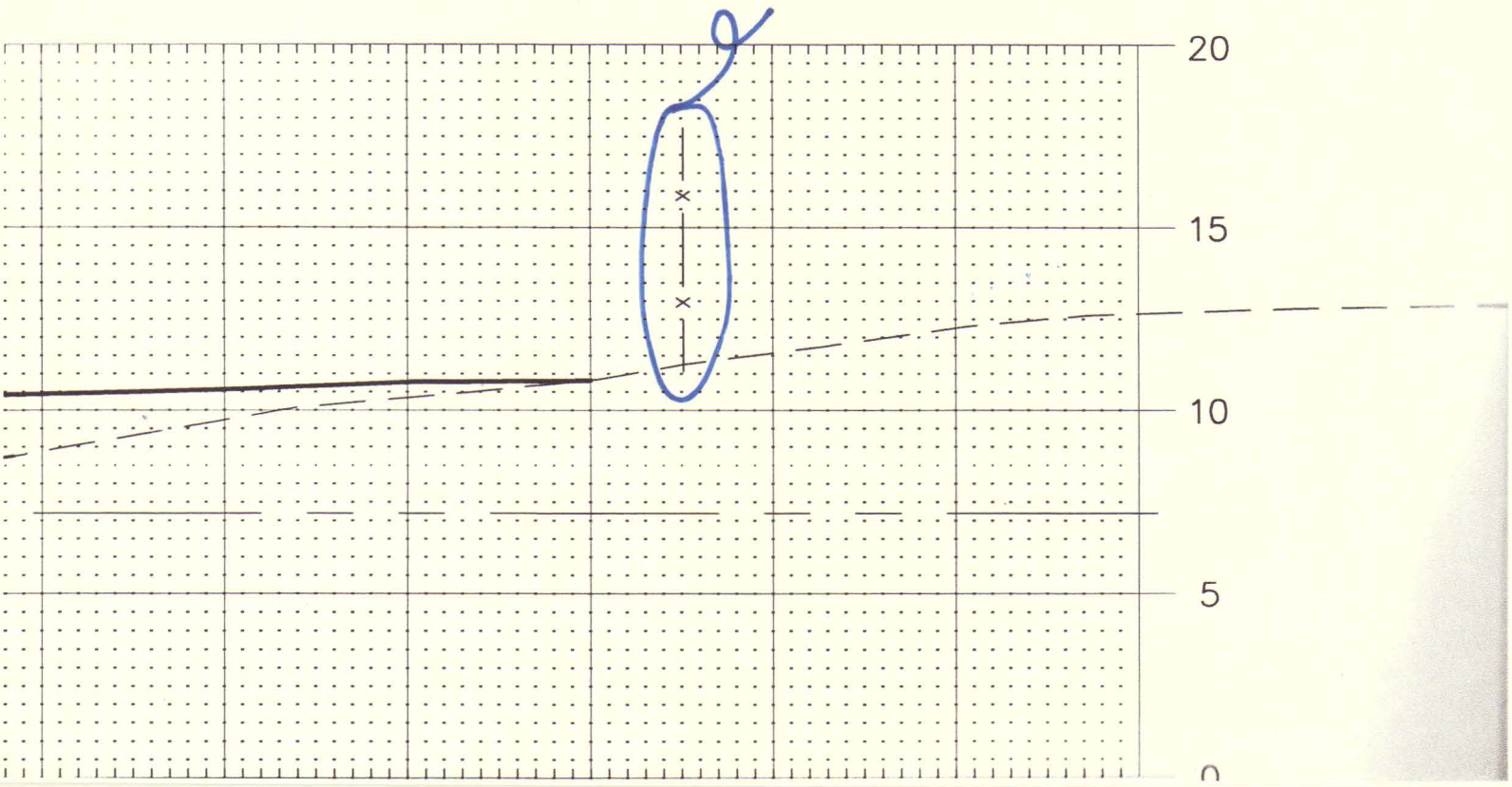
20
15
10
5
0

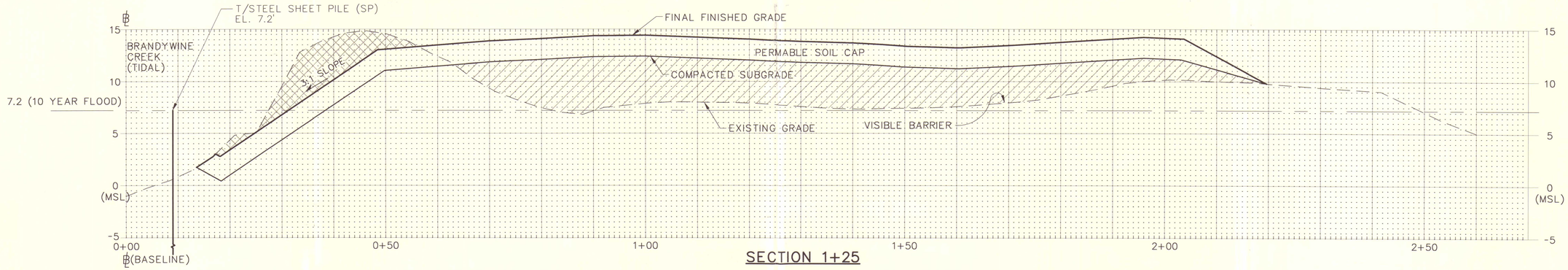

SECTION 1+25

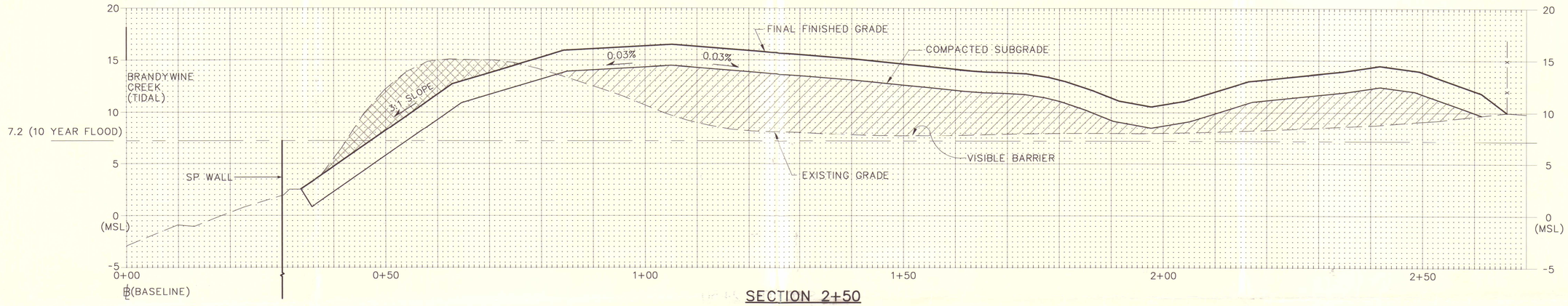

SECTION 2+50

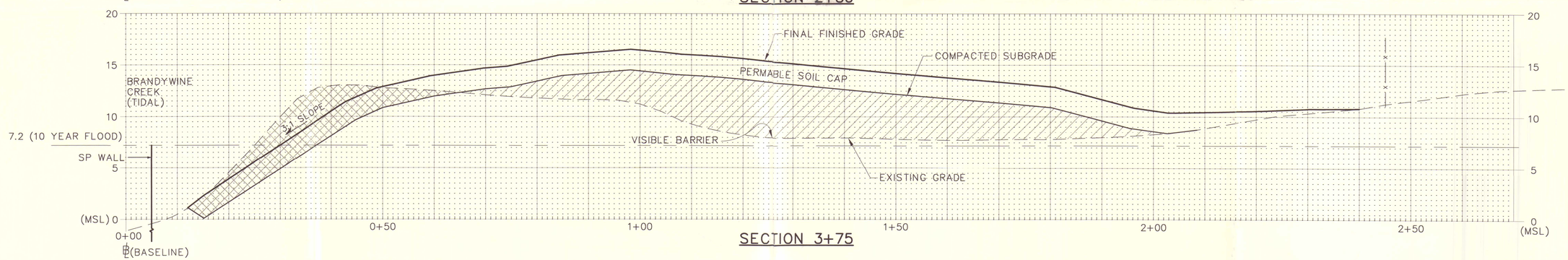

SECTION 3+75

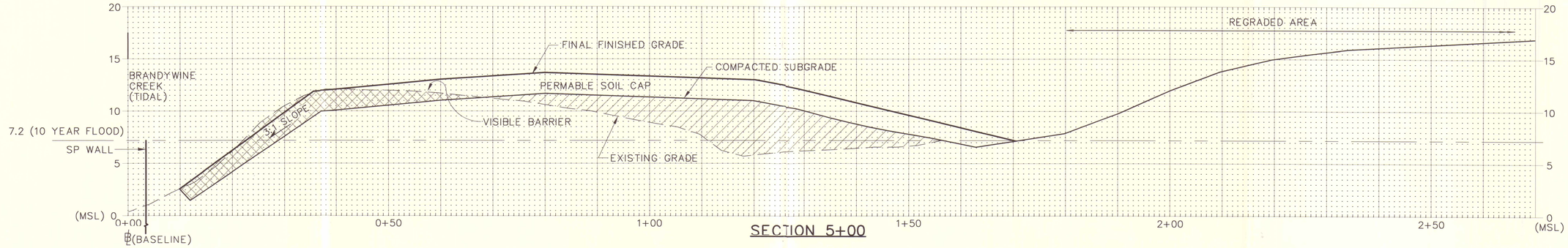

SECTION 5+00

NO.	DATE	DESCRIPTION	APPROVED

REVISIONS

15232004-0721.DWG

DESIGNED ---
DRAWN D.M.F.
CHECKED - - -
DATE SEPT 2000

Tetra Tech EM Inc.
Philadelphia, Pennsylvania

UNITED STATES ENVIRONMENTAL PROTECTION AGENCY
REGION V
12th STREET LANDFILL SITE
WILMINGTON, DELAWARE
TDD NO. 03-007-003

SCALE
5' 0 5' 10'
HORIZONTAL SCALE: 1" = 10'
2.5' 0 2.5' 5'
VERTICAL SCALE: 1" = 5'

CREEK BANK STABILIZATION/REMEDIATION
CROSS SECTIONS

SHEET 3
OF 4

PROJECT NO. G900.31F0007003

ORIGINAL