ORIGINAL

Cottman Avenue PRP Group

CBI

SDMS DocID 2189145

METAL BANK SUPERFUND SITE
PHILADELPHIA, PA

QUALITY ASSURANCE PROJECT PLAN
In-Situ BIOACCUMULATION TESTING AND SEDIMENT ANALYSIS

August 2010

Report Prepared By

Malcolm Pirnie, Inc.

824 Market Street
Suite 820
Wilmington, DE 19801

3809-009/012

MALCOLM PIRNIE

Metal Bank National Priority Site

Quality Assurance Project Plan
In-situ Bioaccumulation Testing and Sediment Analysis

Prepared by

Environmental Standards for
Malcolm Pirnie, Inc.

August 2010

Version: 2010/08/04

Document Control Number. MB-002

© 2010 Environmental Standards, Inc - All rights reserved

This page is intentionally left blank

Table of Contents

INTRODUCTION 1
QAPP Worksheet #1. Title and Approval Page 2
QAPP Worksheet #2 QAPP Identifying Information 3
QAPP Worksheet #3. Distribution List 8
QAPP Worksheet #4. Project Personnel Sign-Off Sheet 9
QAPP Worksheet #5. Project Organization Chart 15
QAPP Worksheet #6. Communication Pathways 20
QAPP Worksheet #7. Personnel Responsibilities and Qualification Table 21
QAPP Worksheet #8. Special Personnel Training Requirements Table 22
QAPP Worksheet #9. Project Scoping Session Participants Sheet 23
QAPP Worksheet #10. Problem Definition 28
QAPP Worksheet #11. Project Quality Objectives /Systematic Planning Process Statements 29
QAPP Worksheet #12. Measurement Performance Criteria Table 31
QAPP Worksheet #13. Secondary Data Criteria and Limitations Table 37
QAPP Worksheet #14. Summary of Project Tasks 38
QAPP Worksheet #15. Reference Limits and Evaluation Table 39
QAPP Worksheet #16. Project Schedule Timeline Table 42
QAPP Worksheet #17. Sampling Design and Rationale 43
QAPP Worksheet #18. Sampling Locations and Methods/SOP Requirements Table (Bioaccumulation; Annual Events) 44
QAPP Worksheet #19. Analytical SOP Requirements Table 46
QAPP Worksheet #20. Field Quality Control Sample Summary 47
QAPP Worksheet #21. Project Sampling SOP References Table 48
QAPP Worksheet #22. Field Equipment Calibration, Maintenance, Testing, and Inspection Table* 50
QAPP Worksheet #23. Analytical SOP References Table 51
QAPP Worksheet #24. Analytical Instrument Calibration Table 52
QAPP Worksheet #25. Analytical Instrument and Equipment Maintenance, Testing, and Inspection Table 53
QAPP Worksheet #26. Sample Handling System 54
QAPP Worksheet #27. Sample Custody Requirements 59
QAPP Worksheet #28. QC Samples Table 65
QAPP Worksheet #29. Project Documents and Records Table 82
QAPP Worksheet #30. Analytical Services Table 85
QAPP Worksheet #31. Planned Project Assessments Table 86
QAPP Worksheet #32. Assessment Findings and Corrective Action Responses 87
QAPP Worksheet #33. QA Management Reports Table 92
QAPP Worksheet #34. Verification (Step I) Process Table 93
QAPP Worksheet #35. Validation (Steps IIa and IIb) Process Table 94
QAPP Worksheet #36. Validation (Steps IIa and IIb) Summary Table 95
QAPP Worksheet #37. Usability Assessment 97
REFERENCES: 99

FIGURE

Figure 1	Organizational Chart

ATTACHMENTS

Attachment 1	Long Term Monitoring – Field Sampling Plan, Malcolm Pirnie, Inc.
Attachment 2	Long Term Monitoring – Work Plan
Attachment 3	Field Modification Form
Attachment 4	Long Term Monitoring Plan Meeting Minutes from August 6, 2008
Attachment 5	Long Term Monitoring Plan Meeting Minutes from November 13, 2008
Attachment 6	SOP No. 1: Procedures for Well Installation and Groundwater Installation, July 2009, Revision No. 1
Attachment 7	SOP No 2 Minirae® 2000 Photoionization Meter Operation and Maintenance Manual
Attachment 8	SOP No. 3: Horiba® U22XD Multi-Parameter Water Quality Monitoring System
Attachment 9	KNOX-ID-0004 Analysis of Polychlorinated Dioxins/Furans by High Resolution Gas Chromatography/High Resolution Mass Spectrometry (HRGC/HRMS) Based on Methods 8290, 8290A, 1613B, 23, 0023A, and TO-9A, REV-8, June 22, 2009
Attachment 10	PT-WC-030: Total Organic Carbon Analysis for Solid and Sediment Matrices
Attachment 11	KNOX-OP-0020· Gravimetric Percent Lipids Determination
Attachment 12	KNOX-ID-0013: Analysis of Polychlorinated Biphenyl (PCB) Isomers by Isotope Dilution HRGC/HRMS, REV-8, April 1, 2009, Effective June 4, 2009
Attachment 13	PT-QA-022. Equipment and Instrument Maintenance
Attachment 14.	SOP No. 4: Collecting Surface Sediments Using an Ekman or Ponar Dredge
Attachment 15....	SOP No. 5: *In-Situ* Sediment Bioaccumulation Tests with *Lumbriculus Variegatus*
Attachment 16	KNOX-QA-0005: Balance Calibration and Weight Verification

ACRONYMS

ASTM	ASTM International. ASTM is a non-profit standards organization formerly called the American Society for Testing and Materials
BSAF	Biota-Sediment Accumulation Factor
CERCLA	Comprehensive Environmental Response, Compensation, and Liability Act
CHSM	Corporate Health and Safety Manager
COC	Chain-of-Custody
CRQL	Contract Required Quantitation Limit
DOD	Department of Defense
DOT	Department of Transportation
DPM	Deputy Project Manager
DQA	Data Quality Audit
DQI	Data Quality Indicator
DRBC	Delaware River Basin Commission
EDD	Electronic Data Deliverable
FSP	Field Sampling Plan
FTL	Field Team Leader
G	Ingestion
GC	Gas Chromatography
GC-HRGC	Gas Chromatography-High Resolution Gas Chromatography
GC-HRMS	Gas Chromatography-High Resolution Mass Spectrometry
GC-MS	Gas Chromatography-Mass Spectrometry
H	Lifetime Health Advisory Level
IC	Initial Calibration
LCS	Laboratory Control Sample
LIMS	Laboratory Information Management System
LTM	Long Term Monitoring
M	Maximum Contamination Level
MDL	Method Detection Limit
MS	Matrix Spike
MSD	Matrix Spike Duplicate
N	Inhalation
NA	Not Applicable
NELAC	National Environmental Laboratory Accreditation Conference
NELAP	National Environmental Laboratory Accreditation Program
NPL	National Priority List
OSHA	Occupational Safety and Health Administration
PA	Performance Audit
PA DEP	Pennsylvania Department of Environmental Protection
PCB	Polychlorinated Biphenyl
PCIH	Project Certified Industrial Hygienist
PE	Performance Evaluation
PT	Performance Test
PTFE	Polytetrafluoroethylene
PID	Photoionization Detector
PO	Project Officer
PM	Project Manager
PRP	Potentially Responsible Party

ACRONYMS (Cont.)

PSO	Project Safety Officer
PT	Performance Testing
QA	Quality Assurance
QAM	Quality Assurance Manager
QAPP	Quality Assurance Project Plan
QC	Quality Control
QL	Quantitation Limit
QSM	Quality Systems Manual
R	Recovery
RL	Reporting Limit
S	Aqueous Solubility Cap
RPD	Relative Percent Difference
SA	Spike Added to spiking matrix
SDG	Sample Delivery Group
SMO	Sample Management Officer
SOP	Standard Operating Procedure
SOW	Statement of Work
SR	Spike Result
SSR	Spike Sample Result
SVOCs	Semi-Volatile Organic Compounds
TAT	Turnaround Time
TBD	To Be Determined
TD	Technical Director
TSA	Technical Systems Audit
UFP	Uniform Federal Policy
USACE	United States Army Corps of Engineers
US EPA	United States Environmental Protection Agency
UST	Underground Storage Tank
WP	Work Plan

INTRODUCTION

This Quality Assurance Project Plan (QAPP) is intended to integrate the technical and quality control aspects of the Metal Bank National Priority List (NPL) Site (Site) biota sampling and analysis program (the "program") and is supplemented by detailed information in the Field Sampling Plan (FSP). This QAPP details the planning processes for collecting data and describes the implementation of quality assurance (QA) and quality control (QC) activities developed for this program. The purpose of this QAPP is to generate project data that are technically valid and legally defensible. The QAPP consists of four main components:

- Project Management,
- Measurement and Data Acquisition;
- Assessment and Oversight; and
- Data Validation and Usability.

The above components will incorporate QA/QC requirements cited within the following documents:

- U.S Environmental Protection Agency (US EPA) Requirements for Quality Assurance Project Plans, US EPA QA/R-5, March 2001
- US EPA Guidance for the Data Quality Objectives Process, QA/G-4, August 2000.
- Uniform Federal Policy for Quality Assurance Project Plans, Final Version March 2005

Project Background

As described in the Pre-Design Investigation Report (Ogden/Hart Crowser, 2000), the Metal Bank National Priority Site is located on the western shore of the Delaware River, south of Milnor Street and east of Cottman Avenue in Philadelphia, PA. The site consists of both upland areas and sediment areas in the Delaware River, which is tidally-influenced in this vicinity with daily tidal fluctuations of approximately six to seven feet. The Pre-Design Investigation Report indicates that the Metal Bank Site was used for the storage and reclamation of various scrap metals from 1962 until 1979, with scrap metal storage possibly continuing until 1984 or 1985. Site activities included electrical transformer salvage operations, and it is reported that oil from the transformers was discharged to a concrete catch basin connected to an underground storage tank (UST) (Ogden/Hart Crowser, 2000).

In 1972, reports of oil seeping from the banks of the Delaware River at the Metal Bank Site prompted inspections by the U.S. Coast Guard, which concluded that the source of the oil seeps was the UST used to store transformer oil generated by the on-site reclamation activities. Further information on subsequent Metal Bank enforcement and Site investigation activities is provided in the Pre-Design Investigation Report (Ogden/Hart Crowser, 2000).

QAPP Worksheet #1
(UFP-QAPP Section 2.1)
Title and Approval Page

Site Name/Project Name: Metal Bank National Priority Site
Site Location: Philadelphia, Pennsylvania

Document Title: Metal Bank National Priority Site QAPP: *In-Situ* Bioaccumulation Testing and Sediment Analysis.

Lead Organization: US EPA Region 3

Preparer's Name and Organizational Affiliation: David Thal and Stephen T. Zeiner of Environmental Standards, Inc

Preparer's Address, Telephone Number, and E-mail Address:

David Thal, Environmental Standards, Inc P.O. Box 0810, 1140 Valley Forge Road, Valley Forge, PA 19482 and Stephen T. Zeiner, Environmental Standards, Inc P.O. Box 0810, 1140 Valley Forge Road, Valley Forge, PA 19482
e-mail dthal@envstd.com and szeiner@envstd.com

Preparation Date (Day/Month/Year): 08/04/2010

Investigative Organization's Admin Project Manager/Date _____
Signature

Printed Name/Organization: Joe Vitale, Malcolm Pirnie, Inc

Investigative Organization's Technical Project Manager/Date: _____
Signature

Printed Name/Organization: Wyn Davies, CIH, Malcolm Pirnie, Inc

Investigative Organization's Project QA Officer/Date: _____
Signature

Printed Name/Organization: Meredith Langille, Malcolm Pirnie, Inc.

Lead Organization's Project Manager/Date: _____
Signature

Printed Name/Organization: Sharon Fang, US EPA Region 3 Project Manager

Approval Signature/Date: _____
Signature

QAPP Worksheet #2-1
(UFP-QAPP Section 2.2.4)
QAPP Identifying Information

Site Name/Project Name: Metal Bank National Priority Site
Site Location: Philadelphia, Pennsylvania
Site Number/Code: EPA ID# PAD046557096

Title: Metal Bank National Priority Site QAPP

Revision Number: 1
Revision Date: August 2010

Contractor Name: Malcolm Pirnie, Inc.

1. Regulatory Program: Comprehensive Environmental Response, Compensation, & Liability Act (CERCLA)
2. Approval Entity: US EPA Region 3
3. The QAPP is (select one). ☐Generic ☒Project Specific
4. Dates of scoping sessions that were held: August 8, 2008; November 13, 2008; May 19, 2009; and August 17, 2009
5. Dates and titles of QAPP documents written for previous Site work, if applicable:

Title	Approval Date
Long Term Monitoring Plan	May 2010
Long Term Monitoring Plan Field Sampling Plan	May 2010
Long Term Monitoring Work Plan	May 2010

6. Organizational Partners (stakeholders) and connection with Lead Organization:

   The primary project organizational partners include representatives from US EPA Region 3, Pennsylvania Department of Environmental Protection (PA DEP), Delaware River Basin Committee (DRBC), and Malcolm Pirnie, Inc (Malcolm Pirnie). US EPA Region 3 will provide project and contract management guidance to Malcolm Pirnie. Malcolm Pirnie will be the primary consultant and will be responsible for developing and implementing the investigation and will provide project management for other subcontractors

7. Data users: US EPA Region 3 and Malcolm Pirnie
8. If any required QAPP elements and required information are not applicable to the project, then circle the omitted QAPP elements and required information on the attached table Provide an explanation for their exclusions below:

QAPP Worksheet #2-2
QAPP Identifying Information
(Continued)

Required QAPP Element(s) and Corresponding QAPP Section(s)	Required Information	Crosswalk to Worksheet # or Related Documents
Project Management and Objectives		
2 1 Title and Approval Page	- Title and Approval Page	1
2.2 Document Format and Table of Contents 2 2 1 Document Control Format 2 2 2 Document Control Numbering System 2 2 3 Table of Contents 2 2 4 QAPP Identifying Information	- Table of Contents - QAPP Identifying Information	2
2 3 Distribution List and Project Personnel Sign-Off Sheet 2 3 1 Distribution List 2 3 2 Project Personnel Sign-Off Sheet	- Distribution List - Project Personnel Sign-Off Sheet	3 4
2 4 Project Organization 2 4 1 Project Organizational Chart 2 4 2 Communication Pathways 2 4 3 Personnel Responsibilities and Qualifications 2.4.4 Special Training Requirements and Certification	- Project Organizational Chart - Communication Pathways - Personnel Responsibilities and Qualifications Table - Special Personnel Training Requirements Table	5 6 7 8
2 5 Project Planning/Problem Definition 2 5 1 Project Planning (Scoping) 2 5 2 Problem Definition, Site History, and Background	- Project Scoping Session Documentation (including Data Needs tables) - Project Scoping Session Participants Sheet - Problem Definition, Site History, and Background - Site Maps (historical and present)	9 LTM Meetings 10 LTM FSP 10 LTM FSP 10 LTM FSP
2 6 Project Quality Objectives (PQOs) and Measurement Performance Criteria 2 6 1 Development of Project Quality Objectives Using the Systematic Planning Process 2 6 2 Measurement Performance Criteria	- Site-Specific PQOs - Measurement Performance Criteria Table	11 12

QAPP Worksheet #2-3
QAPP Identifying Information
(Continued)

Required QAPP Element(s) and Corresponding QAPP Section(s)	Required Information	Crosswalk to Worksheet # or Related Documents
2 7 Secondary Data Evaluation	- Sources of Secondary Data and Information - Secondary Data Criteria and Limitations Table	13 13
2 8 Project Overview and Schedule 2 8 1 Project Overview 2 8 2 Project Schedule	- Summary of Project Tasks - Reference Limits and Evaluation Table - Project Schedule/Timeline Table	14 15 16
Measurement/Data Acquisition		
3 1 Sampling Tasks 3 1.1 Sampling Process Design and Rationale 3 1 2 Sampling Procedures and Requirements 3 1 2 1 Sampling Collection Procedures 3 1 2 2 Sample Containers, Volume, and Preservation 3 1 2 3 Equipment/Sample Containers Cleaning and Decontamination Procedures 3 1.2 3 Field Equipment Calibration, Maintenance, Testing, and Inspection Procedures 3.1.2.4 Supply Inspection and Acceptance Procedures 3 1 2 6 Field Documentation Procedures	- Sampling Design and Rationale - Sample Location Map - Sampling Locations and Methods/Standard Operating Procedure (SOP) Requirements Table - Analytical Methods/SOP Requirements Table - Field Quality Control Sample Summary Table - Sampling SOPs - Project Sampling SOP References Table - Field Equipment Calibration, Maintenance, Testing, and Inspection Table	17 and FSP Section 3 17 and FSP Section 3 18 and FSP 19 20 See FSP 21 22
3 2 Analytical Tasks 3 2 1 Analytical SOPs 3 2 2 Analytical Instrument Calibration Procedures 3 2.3 Analytical Instrument and Equipment Maintenance, Testing, and Inspection Procedures 3 2 4 Analytical Supply Inspection and Acceptance Procedures	- Analytical SOPs - Analytical SOP References Table - Analytical Instrument Calibration Table - Analytical Instrument and Equipment Maintenance, Testing, and Inspection Table	23 23 24 25

QAPP Worksheet #2-4
QAPP Identifying Information
(Continued)

Required QAPP Element(s) and Corresponding QAPP Section(s)	Required Information	Crosswalk to Worksheet of Related Documents
3 3 Sample Collection Documentation, Handling, Tracking, and Custody Procedures 3 3 1 Sample Collection Documentation 3 3 2 Sample Handling and Tracking System 3 3 3 Sample Custody	- Sample Collection Documentation Handling, Tracking, and Custody SOPs - Sample Container Identification - Sample Handling Flow Diagram - Example Chain-of-Custody Form and Seal	26 26 27 27
3 4 Quality Control Samples 3 4 1 Sampling Quality Control Samples 3 4 2 Analytical Quality Control Samples	- QC Samples Table - Screening/Confirmatory Analysis Decision Tree	28 28
3 5 Data Management Tasks 3 5 1 Project Documentation and Records 3.5 2 Data Package Deliverables 3 5 3 Data Reporting Formats 3 5 4 Data Handling and Management 3 5 5 Data Tracking and Control	- Project Documents and Records Table - Analytical Services Table - Data Management SOPs	29 30 30
Assessment/Oversight		
4 1 Assessments and Response Actions 4 1 1 Planned Assessments 4 1 2 Assessment Findings and Corrective Action Responses	- Assessments and Response Actions - Planned Project Assessments Table - Audit Checklists - Assessment Findings and Corrective Action Responses Table	31 31 32 32
4 2 QA Management Reports	- QA Management Reports Table	33
4 3 Final Project Report		

QAPP Worksheet #2-5
QAPP Identifying Information
(Continued)

Required QAPP Element(s) and Corresponding QAPP Section(s)	Required Information	Crosswalk to Related Documents
Data Review		
5 1 Overview		
5 2 Data Review Steps 5 2 1 Step I Verification 5 2 2 Step II: Validation 5 2 2 1 Step IIa Validation Activities 5.2 2 2 Step IIb Validation Activities 5 2 3 Step III Usability Assessment 5 2 3 1 Data Limitations and Actions from Usability Assessment 5 2 3 2 Activities	- Verification (Step I) Process Table - Validation (Steps IIa and IIb) Process Table - Validation (Steps IIa and IIb) Summary Table - Usability Assessment	34 35 36 37
5 3 Streamlining Data Review 5 3 1 Data Review Steps To Be Streamlined 5 3 2 Criteria for Streamlining Data Review 5 3 3 Amounts and Types of Data Appropriate for Streamlining		36

QAPP Worksheet #3
(UFP-QAPP Manual Section 2.3.1)

The following persons will receive a hardcopy of the approved QAPP, subsequent QAPP revisions, addenda, and amendments:

Distribution List

QAPP Recipients	Title	Organization	Telephone Number	Fax Number	E-mail Address	Document Control Number
Sharon Fang	US EPA Project Manager	US EPA Region 3	(215) 814-3018	(215) 814-3002	Sharon Fang@epamail epa gov	MB002-01
Mark Conoran	PADEP Lead Coordinator	PA DEP, SE Region	(484) 250-5730		mconaron@state pa us	MB002-02
John Dobi	Project Coordinator	Public Service/PRP Group	(973) 430-8036	(973) 242-8064	john dobi@pseg com	MB002-03
Ben Henry	Group Representative	PECO/PRP Group	(215) 841-5641	(215) 841-5579	benjamin henry@exeloncorp com	MB002-04
Meredith Langille	Field Team Leader	Malcolm Pirnie	(484) 688-0382	(484) 213-5249	MLangille@pirnie com	MB002-05
Joe Vitale	Project Director	Malcolm Pirnie	(617) 642 0776	(781) 224 3033	JVitale@pirnie com	MB002-06
Wyn Davies	Project Manager	Malcolm Pirnie	(610) 360 4895	(201) 797 4399	WDavies@pirnie com	MB002-07

Electronic copies of the final QAPP and related project documents will also be available from Malcolm Pirnie and the project database for the personnel named in the organization chart given in Worksheet 5, Figure 1 and other Malcolm Pirnie personnel who will be assigned to work on the project. Those named above will be responsible for distributing the QAPP and related documents to others in their organization.

QAPP Worksheet #4-1
(UFP-QAPP Manual Section 2.3.2)

Have copies of this form signed by key project personnel from each organization to indicate that they have read the applicable sections of the QAPP and will perform the tasks as described. Ask each organization to forward signed sheets to the central project file.

Project Personnel Sign-Off Sheet

Organization: US EPA Region 3

Project Personnel	Title	Telephone Number	Signature	Date QAPP Read
Sharon Fang	Project Manager –US EPA Region 3	215-814-3018		

QAPP Worksheet #4-2
(UFP-QAPP Manual Section 2.3.2)

Have copies of this form signed by key project personnel from each organization to indicate that they have read the applicable sections of the QAPP and will perform the tasks as described. Ask each organization to forward signed sheets to the central project file.

Project Personnel Sign-Off Sheet

Organization: PADEP

Project Personnel	Title	Telephone Number	Signature	Date QAPP Read
Mark Conaron	PADEP Lead Coordinator	(484) 250-5730		

QAPP Worksheet #4-3
(UFP-QAPP Manual Section 2.3.2)

Have copies of this form signed by key project personnel from each organization to indicate that they have read the applicable sections of the QAPP and will perform the tasks as described. Ask each organization to forward signed sheets to the central project file.

Project Personnel Sign-Off Sheet

Organization: PRP Group

Project Personnel	Title	Telephone Number	Signature	Date QAPP Read
John Dobi	Project Coordinator	(973) 430-8036		

QAPP Worksheet #4-4
(UFP-QAPP Manual Section 2.3.2)

Have copies of this form signed by key project personnel from each organization to indicate that they have read the applicable sections of the QAPP and will perform the tasks as described. Ask each organization to forward signed sheets to the central project file.

Project Personnel Sign-Off Sheet

Organization: PRP Group

Project Personnel	Title	Telephone Number	Signature	Date QAPP Read
Ben Henry	Group Representative	(215) 841-5641		

QAPP Worksheet #4-5
(UFP-QAPP Manual Section 2.3.2)

Have copies of this form signed by key project personnel from each organization to indicate that they have read the applicable sections of the QAPP and will perform the tasks as described. Ask each organization to forward signed sheets to the central project file.

Project Personnel Sign-Off Sheet

Organization: Malcolm Pirnie

Project Personnel	Title	Telephone Number	Signature	Date QAPP Read
Joe Vitale, PE	Project Manager (Administrative)	(617) 642-0776		
Wyn Davies, CIH	Project Manager (Technical)	(610) 360-4895		
Steve Langseder	Deputy Project Manager	(302) 494-6113		
Meredith Langille	Project Quality Officer	(484) 213-5249		

QAPP Worksheet #4-6
(UFP-QAPP Manual Section 2.3.2)

Have copies of this form signed by key project personnel from each organization to indicate that they have read the applicable sections of the QAPP and will perform the tasks as described. Ask each organization to forward signed sheets to the central project file.

Project Personnel Sign-Off Sheet

Organization: Malcolm Pirnie

Project Personnel	Title	Telephone Number	Signature	Date QAPP Read
Meredith Langille	Field Team Leader	(484) 213-5249		
TBD	Sample Management Officer	TBD		
TBD	Field Team Members	TBD	Project field team members, when assigned, will be required to sign that they have read applicable sections of the QAPP	Field team members must read applicable sections of the QAPP and SOPs prior to participating in the project

QAPP Worksheet #5
(UFP-QAPP Manual Section 2.4.1)

Project Organization Chart

The Organization Chart attached as Figure 1, provides the description of project organization; roles of team members are summarized below:

Project/Task Organization Overview

The project management team will consist of representatives from US EPA Region 3, PA DEP, the PRP Group, and Malcolm Pirnie. USEPA Region 3 will provide technical oversight to the project and contract management guidance to Malcolm Pirnie. PA DEP will provide US EPA with State approval during the planning and sampling. Malcolm Pirnie, be the primary contractor, will be responsible for developing and implementing sampling and will provide project management for other subcontractors.

PRP Team Members

This section contains a description of the project organizational structure. Sharon Fang is the US EPA Remedial Project Manager with responsibility for the Metal Bank NPL Site. Malcolm Pirnie will be the primary manager and will be responsible for developing and implementing sampling and conducting project management for other subcontractors. Additional project team members from other companies may be subcontracted to Malcolm Pirnie.

Project Officer – The Project Officer (PO) is responsible for the commitment of resources required to fulfill the PRP's obligation to the US EPA.

Project Manager – The Project Manager (PM) is accountable to the PO throughout the duration of the project. The PM will be the primary point of contact with the US EPA. The PM may delegate authority to expedite and facilitate the implementation of the project plan. The PM is responsible for:

- Coordination with the US EPA
- Budget control
- Subcontractor performance
- Project coordination to implement Work Plans
- Allocation of staffing and resources to implement the QA/QC program and the Site Safety and Health Plan (SSHP)
- Review of engineering and interim reports

Deputy Project Manager – The Deputy Project Manager (DPM) reports directly to, and works with, the Project Manager. The DPM is responsible for assisting the Project Manager, as needed, with project related issues.

Project Quality Consultants – The Project Quality Consultants are responsible for independent reviews of project quality. The Project Quality Consultants make an integral contribution to the project success by performing technical reviews throughout all project phases and offering technical guidance.

Corporate Health and Safety Manager – The Corporate Health and Safety Manager (CHSM) is responsible for development and implementation of Malcolm Pirnie's Health and Safety program. The CHSM serves as the administrator of Malcolm Pirnie's Corporate Health and Safety program. The CHSM is responsible for:

- Proper training for Malcolm Pirnie field personnel
- Medical clearance of Malcolm Pirnie field personnel
- Field personnel having adequate experience with personal protective equipment
- Providing guidance on data interpretation
- Determining levels of worker protection

Project Certified Industrial Hygienist – The Project Certified Industrial Hygienist (PCIH) is responsible for development, implementation, and review of the Site Safety and Health Plan. The PCIH functions as a liaison with the US EPA, the Occupational Safety and Health Administration (OSHA), and other agencies on health and safety issues.

Project Safety Officer – The Project Safety Officer (PSO) is knowledgeable in safety and worker protection techniques as they relate to the project. Responsibilities include monitoring daily compliance of work to the SSHP, having the ability and authority to make needed changes or additions to the SSHP, and providing technical assistance to the Project Manager on problems relating to work safety.

The PSO is responsible for the development and set-up of emergency procedures and personnel decontamination procedures. The PSO or designee will complete a daily diary of activities with health and safety relevance. If unsafe work conditions are encountered, the PSO is authorized to stop work. Resolution of all health and safety problems will be coordinated through the Project Manager with assistance from the PCIH.

Project Quality Control Officer – The Project QC Officer is responsible for project specific supervision and monitoring of the QA program and reports to the Project Manager. Additional responsibilities include:

- Ensuring that field personnel are familiar with and adhere to proper sampling procedures, field measurement techniques, sample identification, and chain-of-custody procedures
- Coordinating with the analytical laboratory for the receipt of samples, the reporting of analytical results, and recommending corrective actions to correct deficiencies in the analytical protocol or sampling
- Preparing QA reports to management

Field Team Leader – The Field Team Leader will serve as the contact person for Malcolm Pirnie for field investigations and activities. The Field Team Leader will be responsible for the logistics of the field activities. The Field Team Leader will:

- Inspect and replace equipment
- Prepare interim field reports
- Prepare samples for shipment
- Coordinate field activities
- Schedule sampling and other field activities

Field Personnel – All field personnel are required to become thoroughly familiar with the FSP, QAPP, and the SSHP and follow the guidelines outlined in these documents. Field personnel will implement the plans, contribute any appropriate suggestions, and assist in discovering or correcting non-conforming working procedures.

Data Validator (to be assigned if necessary) - Environmental Standards Inc. will validate data from the laboratories.

Subcontractor Team Members

Subcontractors will be utilized for performance of specific work activities associated with the Metal Bank NPL field sampling activities. The following is a list of possible services to be subcontracted:

Laboratories (To Be Determined) – A laboratory with demonstrated capability to meet the project objectives will be subcontracted to perform the analytical services needed to complete sediment and tissue testing.

Other Contractor(s) (to be determined) – Other subcontractors will be employed for functions such as constructing tubes, cages and supports; obtaining test specimens; installing tubes; performing 3rd day checks; sampling at the end of 28 days; periodic checks during the sampling period; documentation of study conditions; recovery of sample specimens; preparing chains-of-custody; preparation of samples for shipment to the laboratory; and shipment to and communications with the laboratory. Additional subcontractors will be employed for performing data validation and usability evaluations and data management as needed to support the proper calculation of BSAFs.

QAPP Worksheet #6

(UFP-QAPP Manual Section 2.4.2)

Communication Pathways

Communication Drivers	Responsible Entity	Name	Phone Number	Procedure (Timing, Pathways, etc.)
Approval of amendments to the QAPP	Malcolm Pirnie	Project Manager - Administrative (Joe Vitale or designee)	(617) 642-0776	Obtain initial approval from the US EPA and submit documented amendments within 10 working days to US EPA/PA DEP for approval
Document and records control	Malcolm Pirnie	Project Quality Officer (Meredith Langille or designee)	(484) 213-5249	Project document preparation and distribution Document and records control posting procedure implemented within 5 working days of receipt by Malcolm Pirnie
Stop work and initiation of corrective action	Malcolm Pirnie	Project Managers or Deputy Project Manager (Joe Vitale, Wyn Davies, Steve Langseder or designees)	J Vitale (617) 642-0776 W Davies. (610) 360-4895 S Langseder (302) 494-6113	The PM communicates within 24 hours of stop work to the project organization by phone, with confirming e-mail
Real time modification, notifications and approval	Malcolm Pirnie	Project Quality Officer (Meredith Langille or designee) with PM/DPM approval	(484) 213-5249	Real time modification to the project will require the approval of the PQO and PM or DPM (or designees) and will be documented using the Field Modifications Form in Attachment 3 within 5 working days
Reporting of serious issues	Malcolm Pirnie	Project Managers or Deputy Project Manager (Joe Vitale, Wyn Davies, Steve Langseder or designees)	J Vitale (617) 642-0776 W Davies (610) 360-4895 S Langseder (302) 494-6113	Report any serious issues to the US EPA and other concerned parties by e-mail or memo
Meeting minutes	Malcolm Pirnie	Deputy Project Manager (Steve Langseder or desginee)	(302) 494-6113	Post approved meeting minutes or distribute by e-mail within 5 working days of meeting
Corrective action, audit finding	Malcolm Pirnie	Project Quality Officer (Meredith Langille or designee)	484-213-5249	Problems or negative audit findings are reported to the PM or DPM by e-mail within 3 days

QAPP Worksheet #7
(UFP-QAPP Manual Section 2.4.3)

Personnel Responsibilities and Qualification Table

Name	Title	Organizational Affiliation	Responsibilities	Education and Experience Qualifications
Sharon Fang	US EPA RPM	USEPA Region 3	Remedial Project Manager	Professional Engineer
Joe Vitale, PE	Senior Associate	Malcolm Pirnie	Administrative Project Manager	Professional Engineer (MA), MS Civil Engineering, MBA Business Administration, BS Chemistry
Wyn Davies, CIH	Senior Associate	Malcolm Pirnie	Technical Project Manager	CIH, MS Environmental Engineering, BS Chemical Engineering
Steve Langseder	Senior Project Engineer	Malcolm Pirnie	Deputy Project Manager	BS Civil Engineering
Meredith Langille	Project Engineer	Malcolm Pirnie	Project Quality Officer	MS Civil Engineering, BS Environmental Engineering

Note. Resumes of Malcolm Pirnie project team members can be obtained by contacting the Malcolm Pirnie PM or designee

QAPP Worksheet #8
(UFP-QAPP Manual Section 2.4.4)

Special Personnel Training Requirements Table

Project Function	Specialized Training – Title or Description of Course	Training Provider	Training Date	Personnel/Groups Receiving Training	Personnel Titles/ Organizational Affiliation	Location of Training Records/Certificates
Field Team	Safety and OSHA training and medical monitoring as specified in the SSHP	Malcolm Pirnie	Training dates kept in company/project training records	All field team members working on Site	All Malcolm Pirnie and subcontractor personnel working on Site	Malcolm Pirnie Project Files

Note: Training Records will be kept in the Malcolm Pirnie project files.

QAPP Worksheet #9 –1
(UFP-QAPP Manual Section 2.5.1)

Numerous project team meetings and conference calls were held to plan the project from August 6, 2008 through March 2, 2010. These included meetings with the US EPA, US ACE and PA DEP at the USEPA Philadelphia, Pennsylvania offices to discuss the Long Term Monitoring Plan objectives and status. Visits to the Site are made by team members as necessary during construction activities to evaluate conditions and to gather information needed to develop project plans.

Long Term Monitoring Plan Meeting Participants:
Project Scoping Session Participants Sheet

Project Name: Metal Bank NPL Superfund Site **Projected Date(s) of Sampling:** Summer 2010 **Project Managers:** Joe Vitale, PE and Wyn Davies, CIH	**Site Name:** Metal Bank NPL Superfund Site **Site Location:** 7301 Milnor Street, Philadelphia, PA 19136

Date of Session: August 6, 2008 **Scoping Session Purpose:** Long Term Monitoring Program

Name	Title	Affiliation	Phone #	E-mail Address	Project Role
Sharon Fang	Project Manager	US EPA	(215) 814-3018	Sharon Fang@epamail epa gov	RPM
Mark Conaron	PA DEP Lead Coordinator	PA DEP, SE Region	(484) 250-5730	mconaron@state pa us	PA DEP Lead Coordinator
John Dobi	Senior Project Scientist	Public Service/PR P Group	(973) 430-8036	john dobi@pseg com	Project Coordinator
Bruce Pluta	Senior Scientist	US EPA		pluta bruce@epamail epa gov	Technical Expert
Kathy Patnode	Senior Scientist	Us FWS		kathleen_patnode@fws gov	Technical Expert
Joe Vitale	Senior Associate	Malcolm Pirnie	(781) 213-4930	jvitale@pirnie com	Project Director
Ray Lees	Senior Project Manager	Malcolm Pirnie	(484) 688-0361	rlees@pirnie com	Project Manager
Len Warner	Associate	Malcolm Pirnie	(914) 641-2972	lwerner@pirnie com	Technical Expert
Paul Schroeder	Senior Scientist	USACE		paul r schroeder@usace army mil	Technical Expert
John Yagecic	Senior Scientist	DRBC		john yagecic@drbc state nj us	Technical Expert

See Attached Meeting Minutes for Comments/Action Items/Decisions

QAPP Worksheet #9 –2

Long Term Monitoring Plan Meeting Participants:

Project Scoping Session Participants Sheet

Project Name: Metal Bank NPL Superfund Site **Projected Date(s) of Sampling:** Summer 2010 **Project Managers:** Joe Vitale, PE and Wyn Davies, CIH	**Site Name:** Metal Bank NPL Superfund Site **Site Location:** 7301 Milnor Street, Philadelphia, PA 19136

Date of Session: November 13, 2008
Scoping Session Purpose: Long Term Monitoring Program

Name	Title	Affiliation	Phone #	E-mail Address	Project Role
Sharon Fang	Project Manager	US EPA	(215) 814-3018	sharon fang@epamail epa gov	RPM
Mark Conaron	PADEP	PA DEP, SE Region	(484) 250-5730	mconaron@state pa us	PA DEP Lead Coordinator
John Dobi	Senior Project Scientist	Public Service/PRP Group	(973) 430-8036	john dobi@pseg com	Project Coordinator
Bruce Pluta	Senior Scientist	US EPA	NA	pluta bruce@epamail epa gov	Technical Expert
Kathy Patnode	Senior Scientist	FWS	NA	kathleen_patnode@fws gov	Technical Expert
Joe Vitale	Senior Associate	Malcolm Pirnie	(781) 213-4930	jvitale@pirnie com	Project Director
Ray Lees	Senior Project Manager	Malcolm Pirnie	(484) 688-0361	rlees@pirnie com	Project Manager
Len Warner	Associate	Malcolm Pirnie	(914) 641-2972	lwerner@pirnie com	Technical Expert
Paul Schroeder	Senior Scientist	US ACE	NA	paul r schroeder@usace army mil	Technical Expert
Sohan Garg	Senior Scientist	PA DEP	NA	NA	NA
Orest Kolodij	Senior Scientist	PA DEP	NA	NA	NA
Tim Cherry	Director	PA DEP	NA	NA	NA
Charles Nicholas	QA Engineer	US ACE	NA	NA	NA
Chris Koerner	Senior Engineer	CDM	NA	NA	NA
Wyn Davies	Senior Associate	Malcolm Pirnie	(201) 398-4409	WDavies@Pirnie com	PM
Steve Langseder	Senior Project Engineer	Malcolm Pirnie	(302) 884-6908	slangseder@pirnie com	Lead Resident Engineer

Project Scoping Session Participants Sheet

Project Name: Metal Bank NPL Superfund Site **Projected Date(s) of Sampling:** Summer 2010 **Project Managers:** Joe Vitale, PE and Wyn Davies, CIH	**Site Name:** Metal Bank NPL Superfund Site **Site Location:** 7301 Milnor Street, Philadelphia, PA 19136

Date of Session: November 13, 2008
Scoping Session Purpose: Long Term Monitoring Program

Name	Title	Affiliation	Phone #	E-mail Address	Project Role
Carlo DiTullio	Project Engineer	Malcolm Pirnie	(484) 688-0362	cditullio@pirnie com	Project Engineer

See Attached Meeting Minutes for Comments/Action Items/Decisions

QAPP Worksheet #9 –3

Long Term Monitoring Plan Meeting Participants:
Project Scoping Session Participants Sheet

Project Name: Metal Bank NPL Superfund Site **Projected Date(s) of Sampling:** Summer 2010 **Project Managers:** Joe Vitale, PE and Wyn Davies, CIH	**Site Name:** Metal Bank NPL Superfund Site **Site Location:** 7301 Milnor Street, Philadelphia, PA 19136

Date of Session: May 19, 2009
Scoping Session Purpose: Long Term Monitoring Program

Name	Title	Affiliation	Phone #	E-mail Address	Project Role
Sharon Fang	Project Manager	US EPA	(215) 814-3018	Sharon Fang@epamail epa gov	RPM
Bruce Pluta	Senior Scientist	US EPA	NA	pluta bruce@epamail epa gov	BTAG
Kathy Patnode	Senior Scientist	US FWS	NA	kathleen_patnode@fws gov	Technical Expert
John Dobi	Senior Scientist	Public Service/PRP Group	(973) 430-8036	john dobi@pseg com	Project Coordinator

Discussion focused on whether worms or corbicula should be used to develop BSAF factors for the site. A decision to use worms was reached.

QAPP Worksheet #9 –4

Long Term Monitoring Plan Conference Call Participants:
Project Scoping Session Participants Sheet

Project Name: Metal Bank NPL Superfund Site **Projected Date(s) of Sampling:** Summer 2010 **Project Managers:** Joe Vitale, PE and Wyn Davies, CIH	**Site Name:** Metal Bank NPL Superfund Site **Site Location:** 7301 Milnor Street, Philadelphia, PA 19136

Date of Session: August 17, 2009
Scoping Session Purpose: Long Term Monitoring Program

Name	Title	Affiliation	Phone #	E-mail Address	Project Role
Sharon Fang	Project Manager	US EPA	(215) 814-3018	sharon fang@epamail epa gov	RPM
Bruce Pluta	Senior Scientist	US EPA	NA	pluta bruce@epamail epa gov	BTAG
Kathy Patnode	Senior Scientist	US FWS	NA	kathleen_patnode@fws gov	Technical Expert
John Dobi	Senior Scientist	Public Service/PRP Group	(973) 430-8036	john dobi@pseg com	Project Coordinator

Reached consensus on number and location of worm study sampling points.

QAPP Worksheet #10
(UFP-QAPP Manual Section 2.5.2)

Problem Definition

This is an NPL Superfund Site that has been remediated under US EPA Region III for both upland soils and near shore river sediments for PCBs. This task is concerned with gathering data on tissue and sediment contaminant concentrations to support the determination of biota-sediment accumulation factor (BSAFs) to determine the remedy's effectiveness. The sediments at the Metal Bank facility are known to contain polychlorinated biphenyls (PCBs) and other chemical contamination that potentially could be accumulated in the tissues of benthic invertebrates. The objectives for this study are the following:

- Gather sediment concentration data and data from 28-day exposures of *Lumbriculus variegatus* caged in the sediment. Collect sufficient data to determine location-specific BSAFs for selected PCB congeners. The calculation of BSAFs is described in Burkhard 2009.
- Identify a set of non-co-eluting PCB congeners spanning the levels of chlorination observed in the sediment and biota, which have optimal qualitative and quantitative certainty, to be used in the calculation of BSAFs.
- Determine the sediment dry weight concentration of total PCBs for the four in situ bioassay locations.
- Provide data that support the comparison of BSAF results of four locations to the BSAF results for two reference locations.

Note: For further discussion regarding the problem definition please see the LTM FSP and WP. Maps are available in the FSP.

QAPP Worksheet #11-1
(UFP-QAPP Manual Section 2.6.1)

Project Quality Objectives /Systematic Planning Process Statements

Who will use the data? US EPA Region 3 and Malcolm Pirnie's long term monitoring team.
What will the data be used for? • Determine PCB congener BSAFs for each sampling location and reference areas. Determine PCB congener sediment concentrations.
What types of data are needed? • Analytical data needs include analyses of homogenates of exposed L. variegatus and collocated sediments for PCBs as congeners. • Supporting parameters include sediment TOC, tissue lipid content, sediment percent moisture. • Field data to support the quality of ambient water at exposure stations, including temperature, dissolved oxygen, pH, conductivity, turbidity.
How "good" do the data need to be in order to support the environmental decision? The data needs for this project should consider the environmental remedy previously constructed. The data must be technically and legally defensible and of sufficient quality to support the project objectives. See Worksheet 15, Reference and Evaluation Table, which summarizes the analytical parameters and the associated project action levels and project quantitation limits.
How much data are needed? A bioassay is needed from each of four test locations and two reference locations. The assay for each location should be a composite of live, depurated specimens from six tissue exposure cells for each location. Sufficient tissue sample will be required for PCB and lipid determinations. The number of samples per test parameter to be collected at each sampling location is described in Worksheet 18 of QAPP.

QAPP Worksheet #11-2
(UFP-QAPP Manual Section 2.6.1)

Project Quality Objectives /Systematic Planning Process Statements

Where, when, and how should the data be collected/generated? Livariegatus exposures will be performed at four test locations and two reference locations. This sampling will be conducted annually until tissue concentrations exhibit reductions. Collocated sediments samples will be collected following retrieval of the in-situ chamber and analyzed. Sediment should be collected from the excavation walls that surround the chamber at the same depth that the chamber was located to be representative of worm exposure. Worms will need to be acclimated to the conditions (e.g./ temperature, DO) in the river prior to deployment. As live and dead worms will be sorted during retrieval, percent of survival of the worms should be provided to EPA. Tissues will be generated in accordance with SOP 005, in Attachment 15. The samples collected will be submitted to TestAmerica laboratories, a National Environmental Accreditation Conference (NELAC) accredited lab for analyses. (See FSP Section 4 and Worksheet #21.)
Who will collect and generate the data? A subcontractor (Normandeau Associates) will perform the sample deployment, sample recovery, depuration, and compositing. The samples will be analyzed for chemical analytical parameters by the subcontracted laboratory.
How will the data be reported? The data will be reported by the laboratory to Malcolm Pirnie, according to the requirements in Worksheet 29. Laboratory electronic data deliverables (EDD) will be obtained in a US EPA Region 3 compliant format (http://www.epa.gov/reg3hscd/edd/).
How will the data be archived? Electronic data will be archived in the project database to be maintained by Malcolm Pirnie. Hard copies of laboratory reports will also be kept in the Malcolm Pirnie project files. Data will be transferred to the US EPA upon completion of the project. Retrieval of data by others will be at the discretion of the US EPA. The length of time that records will be archived will be at the discretion of the US EPA.

QAPP Worksheet #12-1

Measurement Performance Criteria Table

Matrix	Sediment and Tissue
Analytical Group	PCB Congener EPA 1668A
Concentration Level	Low

Sampling Procedure	Analytical Method/SOP[1]	Data Quality Indicators (DQIs)	Measurement Performance Criteria [1]	QC Sample and/or Activity Used to Assess Measurement Performance	QC Sample Assesses Error for Sampling (S), Analytical (A) or Both (S&A)
See Worksheet #21	US EPA Method 1668A and Laboratory SOP	Sensitivity and Accuracy	Less than QLs	Equipment Blank	S & A
		Precision	40% < RPD for duplicate values greater than or equal to 5 times the CRQL	Field Duplicates	S & A
		Accuracy/Bias	% Relative Standard Deviation (RSD) ≤ 20% for toxics and LOCs	Initial Calibration	A
		Accuracy/Bias	Recoveries per acceptance limits in Table 6, 1668A	Calibration Verification	A
		Accuracy/Bias	Recoveries per acceptance limits in Table 6, 1668A	Initial Precision and Recovery (IPR)	A
		Accuracy/Bias	Recoveries per acceptance limits in Table 6, 1668A	Ongoing Precision and Recovery (OPR)	A
		Accuracy/Bias	Recoveries per acceptance limits in Table 6, 1668A	Internal Standard Spiking Solution (Labeled Recovery) in Samples	A
		Sensitivity	Less than the laboratory EML	Method Blanks (MBs)	A
		Sensitivity	Low enough to support the QLs	Method Detection Limits (MDLs)	A
		Completeness	>90% collection, >90% laboratory analysis	Data Completeness Check	S & A

1 The assigned laboratory must perform and meet all the measurement performance criteria that assess the analytical DQIs specified in US EPA 1668A or the applicable US EPA method such as initial and ongoing studies to demonstrate precision and accuracy, calibration verification, internal standards and ongoing precision and accuracy standards for accuracy, and blanks and method detection limits for sensitivity

QAPP Worksheet #12-2

Measurement Performance Criteria Table

Matrix	Sediment
Analytical Group	Total Organic Carbon
Concentration Level	Low

Sampling Procedure	Analytical Method/SOP[1]	Data Quality Indicators (DQIs)	Measurement Performance Criteria [1]	QC Sample and/or Activity Used to Assess Measurement Performance	QC Sample Assesses Error for Sampling (S), Analytical (A) or Both (S&A)
See Worksheet #21	Modified Lloyd Kahn	Sensitivity and Accuracy	Less than QLs	Equipment Blank	S & A
		Precision	RPD < 40% for duplicate values greater than or equal to 2 times the QL	Field Duplicates	S & A
		Accuracy/Bias	Per lab SOP, minimum of four concentration , $r^2 \geq 0.995$	Initial Calibration	A
		Accuracy/Bias	Per SOP % difference or drift $\leq$15%	Calibration Verification	A
		Accuracy/Bias /Precision	Percent recovery and RPD% requirements	Matrix Spike	A
		Accuracy/Bias	Recovery percent limits	Laboratory Control Samples (LCS)	A
		Accuracy/Bias	Laboratory acceptance limit (% recovery)	Standard Reference Material	A
		Sensitivity	Low enough to support the QLs	Method Detection Limits	A
		Accuracy/Bias	Less than the QLs or less than 10% of the analyte concentration found	Method Blanks	A
		Completeness	>90% soil collection, >90% laboratory analysis	Data Completeness Check	S & A

Measurement Performance Criteria Table

To measure and control the quality of analyses, certain QA parameters are defined and utilized in data analysis activities. These parameters are defined below.

Precision

Precision measures the reproducibility of data or measurements under specific conditions. Precision is a quantitative measure of the variability of a group of data compared to their average value. Duplicate precision is stated in terms of relative percent difference (RPD) or absolute difference between two measurements. Measurement of precision is dependent upon sampling technique and analytical method. Field duplicate and laboratory duplicate samples will be used to measure precision for project samples. Both sampling and analysis will be as consistent as possible. For a pair of measurements, RPD (or absolute difference) will be calculated to assess precision, as presented below:

$$RPD(\%) = \frac{|D_1 - D_2|}{\left[\frac{(D_1 + D_2)}{2}\right]} \times 100$$

where: D_1 and D_2 = the two replicate values.

RPD will meet US EPA method requirements, where applicable, or the QA requirements listed in the applicable laboratory standard operating procedures.

Accuracy/Bias

Accuracy measures the bias in a measurement system. Sources of error include the sampling process, field contamination, preservation, handling, shipping, sample matrix, sample preparation, and analysis technique. Analytical accuracy will be assessed through surrogate spike, matrix spike, and laboratory control and/or quality check samples, where applicable. In general, accuracy is measured in terms of percent recovery (%R).

$$\%R = \frac{(SSR - SR)}{SA} \times 100$$

where: SSR = spike sample result
SR = sample result
SA = spike added to spiking matrix

Refer to the US EPA method for the laboratory analytical method accuracy requirements.

Representativeness

Representativeness expresses the degree to which data accurately and precisely reflect a characteristic of a population, parameter variations at a sampling point, a process condition, or an environmental condition. Representativeness is a qualitative parameter that is dependent upon the proper design and implementation of the sampling program and proper laboratory protocol. The sampling design created for this project was intended to provide data representative of site conditions. During the development of the sampling design, consideration was given to the past history of contamination in the study area, existing analytical data, physical setting, and processes. Representativeness will be satisfied by determining that the QAAP is followed; proper sampling techniques, preservation, and handling are used; proper analytical procedures are followed; and holding times for the samples are not exceeded in the laboratory.

Completeness

Completeness is a measure of the amount of usable data obtained from a measurement system compared to the amount that was expected to be obtained under normal conditions. It is expected that the laboratories used for this project will provide data that meet the QC acceptance criteria for 90 percent, or more, of all samples analyzed. Following the completion of the analytical testing, the percent completeness will be calculated by the following equation:

$$\text{COMPLETENESS } (\%) = \frac{\text{number of usable data}}{\text{number of samples collected for each parameter analyzed}} \times 100$$

The data validation process will be used to determine the quality and quantity of usable analytical data generated.

The completeness acceptance criterion for samples collected in the field will be 90 percent of the quantity of samples planned for collection as described in Worksheet 18. Corrective action may be implemented to re-collect samples where necessary and possible (*e.g.*, modifying a planned sample location, sample jars broken during shipment, *etc.*). Laboratory notification sample receipt and condition will be used to determine, as soon as possible, whether any problems during sample shipment necessitate recollection of samples.

Comparability

Comparability expresses the confidence with which one data set can be compared to another. The extent to which existing and planned analytical data will be comparable depends on the similarity of sampling and analytical methods. he procedures used to obtain the planned analytical data are expected to provide comparable data to existing datasets for the Site. The procedures proposed for both soil and settled dust sample collection are similar to those previously conducted by the US EPA. The procedures used will be US EPA-promulgated methodologies or ASTM Standard Test

Methods, which are well recognized and commonly used for environmental and geotechnical investigations.

Desired Method Sensitivity

Depending upon the use of the data and the type of test parameter, specific Quantitation Limits (QLs) will be targeted. Worksheet 15 lists the targeted QLs specified for the definitive chemical parameters required for this project.

QAPP Worksheet #13
(UFP-QAPP Manual Section 2.7)

Secondary Data Criteria and Limitations Table

Secondary Data	Data Source (Originating Organization, Report Title, and Date)	Data Generator(s) (Originating Org., Data Types, Data Generation/ Collection Dates)	How Data Will Be Used	Limitations on Data Use
N/A	N/A	N/A	N/A	N/A

QAPP Worksheet #14
(UFP-QAPP Manual Section 2.8.1)

Summary of Project Tasks

Sampling Tasks: Construct tubes, construct anchoring cages, obtain test specimens. Identify 4 test locations and 2 reference locations. Deploy, expose, and recover test species in accordance with SOP 005. Collect collocated sediment in association with all 6 locations in accordance with SOP 005 and SOP 004. Maintain field data in accordance with SOP 005. Prepare samples for shipment to laboratory. Prepare chains-of-custody and ship samples to laboratory, and provide communications with laboratory to resolve any questions posed during the laboratory sample receipt process.
Analysis Tasks: Homogenize tissue and sediment samples. Analyze tissue and sediments by the testing methodologies described in Worksheets 19 and 23.
Quality Control Tasks: The analytical and testing laboratories will be required to analyze QC samples listed in the US EPA method and procedures given in Worksheet 28.
Secondary Data: Not applicable. See Worksheet 13.
Data Management Tasks: All data, field notes, and analytical information will be placed in an electronic database that will be maintained in the Malcolm Pirnie Wilmington, DE office. If at the time of sampling the assigned laboratory is prepared to provide data in the Region 3 Electronic Data Deliverable (EDD) format, they will be required to do so. All electronic data will be backed up Hardcopies of data will also be stored in project files. Subsets of congeners will be identified based on project specific data quality crieria for use in BSAF calculations. See Worksheet 29 for discussion of data management.
Documentation and Records: All hardcopy data (field notebooks, photos, hardcopies of chain-of-custody forms, airbills, *etc.*) will be taken to the Malcolm Pirnie Wilmington, DE office and stored in the project files.
Assessment/Audit Tasks: SOPs will be reviewed prior to the performance of tasks (see Worksheet 31).
Data Review Tasks Verification of field documentation, including records generated during the *in situ* exposures, chains-of-custody and analytical request forms will be performed by Malcolm Pirnie. Validation of sampling and laboratory data will be conducted by Environmental Standards Inc and will be conducted using the criteria in the applicable analytical SOPs (see Worksheets 23, 28, 35 and 36)

QAPP Worksheet #15 -1
(UFP-QAPP Manual Section 2.8.1)

Reference Limits and Evaluation Table

Matrix: Sediments and Tissues

Analytical Group: PCB Congeners

Concentration Level: Low

Analyte[1]	Chemical Abstracts Services (CAS) Number[1]	Target Quantitation Limit (ng/g)[2]	Project Quantitation Limit (ng/g)	Analytical Method		Achievable Laboratory Limits	
				MDLs	QLs	MDLs (ng/g)[3]	QLs (ng/g)[4]
All individual Congeners PCB-1 through PCB-209	See US EPA 1668A	1000 ng/g (1 ppm) on a dry weight basis for total PCBs for sediments.	Sediment: Achieve for each congener < 5 ng/g (dry weight) for all samples with total PCB content < 1 ppm (dry weight basis). Tissues: See achievable QLs	See US EPA 1668A	See US EPA 1668A	Tissues: Average MDL for all congeners ≤ 0.0075 pg/g. Sediments: Average MDL for all congeners ≤ 0.0050 pg/g.	0.01 ng/g to 0.02 per congener or co-eluting congener set. This applies to both sediment and tissue.

1 See US EPA Method 1668A for a list of PCB congeners
2 No formal Project Action Limits have been decided for tissues
3 The laboratory will be required to report estimated detection limits that will be generated on a congener- and sample-specific basis The limits provided are examples and actual sample estimated detection limits will vary
4 Achievable QLs are expected to range from 0.01 ng/g to 0 02 ng/g for individual PCB Congeners based upon the estimated minimum level (EML) provided in table 4 of KNOX0ID00013
5 Sediment results will be in dry weight Depending on the sample moisture content and matrix effects, the actual QLs achieved may be elevated

QAPP Worksheet #15 -2
(UFP-QAPP Manual Section 2.8.1)

Reference Limits and Evaluation Table

Matrix: Sediments

Analytical Group: TOC – Lloyd Kahn

Concentration Level: Low

Analyte	CAS Number	Target Quantitation Limit (ug/L)[1]	Project Quantitation Limit (mg/kg)[2]	Analytical Method		Achievable Laboratory Limits[5]	
				MDLs (%)[3]	Method QL(%)[3]	MDLs (%)	QLs (%)
Total Organic Carbon	Not Applicable	See Note 2	0 1%	NA	NA	0 027	0.1

1 No formal Project Action Limits have been decided, however 0 2% is used as the lower limit at which TOC controls partitioning of PCBs.
2 The Project Quantitation Limits are based upon typical laboratory QLs
3 The MDLs and QLs are not listed in the method
4. The MDLs and QLs are based upon TestAmerica Pittsburgh's achievable detection limits

QAPP Worksheet #15 -3
(UFP-QAPP Manual Section 2.8.1)

Reference Limits and Evaluation Table

Matrix: Tissues

Analytical Group: Lipids by SW-846 8290/KNOX-OP-0020

Concentration Level: Med

Analyte	CAS Number	Target Quantitation Limit (%)[1]	Project Quantitation Limit (%)[2]	Analytical Method		Achievable Laboratory Limits	
				MDLs (%)[3]	Method QLs(%)[3]	MDLs (%)	QLs(%)
Lipids	Not Applicable	0 1	0 1	NA	NA	NA	0.1

1. No formal Project Action Limits have been decided.
2. The Project Quantitation Limits are based upon the laboratory QLs
3. The MDLs and QLs are not listed in the method
4. The MDLs and QLs are based upon the accuracy of the analytical balance and TestAmerica Knoxville's achievable detection limits

QAPP Worksheet #16 (UFP-QAPP Manual Section 2.8.2)

Project Schedule Timeline Table

Activities	Organization	Dates		Deliverable	Deliverable Due Date
		Anticipated Date(s) of Initiation	Anticipated Date of Completion		
Development of the LTM, FSP, WP and associated sampling SOPs	Malcolm Pirnie	August, 2008	April, 2010	Final FSP	January, 2010
Preparation of the QAPP and the testing QA requirements	Malcolm Pirnie	March, 2010	April, 2010	Final QAPP	April, 2010
Deployment of bioaccumulation test chambers	Normandeau Associates	June 1 – Tentantive*	June 3, 2010**	Notification to Project Manger	July 3, 2010**
Recovery of bioaccumulation samples	Normandeau Associates	July 7, 2010**	July 8, 2010**	Samples collected per Final QAPP/WP	July 8, 2010**
Laboratory Analyses	Subcontract Lab	July 9, 2010**	August 13, 2010**	Analytical data to Malcolm Pirnie assigned data validators	August 21, 2010**
Validation, Review, and Verification of Data	Environmental Standards	August 24, 2010**	September 30, 2010**	Validated data reported	One month after data packages receipt
Calculation, Reporting of BSAFs	Malcolm Pirnie	September 30, 2010**	October 22, 2010**	BSAF Report	October 22, 2010**

Note A more detailed project schedule is maintained by the Malcolm Pirnie Project Manager An up-to-date copy of the Project Schedule will be available to the project team members
* The decision regarding when the Long Term Monitoring Sampling will commence will be included in a separate cover.
** The initiation date, completion date, and deliverable due date are dependent on the initiation date of the Long Term Monitoring Sampling

QAPP Worksheet #17
(UFP-QAPP Section 3.1.1)

Sampling Design and Rationale

See the FSP Section 3 for the details of the sampling design and rationale.

QAPP Worksheet #18 -1
(UFP-QAPP Manual Section 3.1.1)

Sampling Locations and Methods/SOP Requirements Table (Bioaccumulation; Annual Events)

Sampling Location/ID Number	Matrix	Depth (inches)	Analytical Group	Concentration Level	Number of Samples (identify field duplicates)	Sampling SOP Reference	Rationale for Sampling Location
MB-TS-North	Tissue (Worms)	At or within 4" below sediment surface	Chemical parameters PCB congeners, lipids	Trace to low	1	See Worksheet 21	See LTM WP Table 4-2
MB-TS-East	Tissue (Worms)	At or within 4" below sediment surface	Chemical parameters PCB congeners, lipids	Trace to low	1	See Worksheet 21	See LTM WP Table 4-2
MB-TS-South	Tissue (Worms)	At or within 4" below sediment surface	Chemical Parameters PCB congeners, lipids	Trace to low	1	See Worksheet 21	See LTM WP Table 4-2
MB-TS-West	Tissue (Worms)	At or within 4" below sediment surface	Chemical parameters PCB congeners, lipids	Trace to low	1	See Worksheet 21	See LTM WP Table 4-2
MB-TS-RS-01	Tissue (Worms)	At or within 4" below sediment surface	Chemical parameters PCB congeners, lipids	Trace to low	1	See Worksheet 21	See LTM WP Table 4-2
MB-TS-RS-02	Tissue (Worms)	At or within 4" below sediment surface	Chemical parameters PCB congeners, lipids	Trace to low	1	See Worksheet 21	See LTM WP Table 4-2
MB-TS-UNEX	Tissue (Worms)	Unexposed	Chemical parameters PCB congeners, lipids	Trace to low	1	See Worksheet 21	See LTM WP Table 4-2

QAPP Worksheet #18 -2
(UFP-QAPP Manual Section 3.1.1)

Sampling Locations and Methods/SOP Requirements Table (Bioaccumulation Annual Events)

Sampling Location/ID Number	Matrix	Depth (inches)	Analytical Group	Concentration Level	Number of Samples (identify field duplicates)	Sampling SOP Reference	Rationale for Sampling Location
MB-SD-North	Sediment	At or within 4" below sediment surface	Chemical parameters. PCB congeners and total organic carbon	Trace to low	1	See Worksheet 21	See LTM WP Table 4-2
MB-SD-East	Sediment	At or within 4" below sediment surface	Chemical parameters PCB congeners and total organic carbon	Trace to low	1	See Worksheet 21	See LTM WP Table 4-2
MB-SD-South	Sediment	At or within 4" below sediment surface	Chemical parameters PCB congeners and total organic carbon	Trace to low	1	See Worksheet 21	See LTM WP Table 4-2
MB-SD-West	Sediment	At or within 4" below sediment surface	Chemical parameters PCB congeners and total organic carbon	Trace to low	1	See Worksheet 21	See LTM WP Table 4-2
MB-SD-RS-01	Sediment	At or within 4" below sediment surface	Chemical parameters PCB congeners and total organic carbon	Trace to low	1	See Worksheet 21	See LTM WP Table 4-2
MB-SD-RS-02	Sediment	At or within 4" below sediment surface	Chemical parameters PCB congeners and total organic carbon	Trace to low	1	See Worksheet 21	See LTM WP Table 4-2

QAPP Worksheet #19
(UFP-QAPP Manual Section 3.1.1)

Analytical SOP Requirements Table

Matrix	Analytical Group	Concentration Level	Analytical and Preparation Method/SOP Reference	Sample Volume/Mass per Analysis	Containers[1] (number, size, and type)	Preservation Requirements (chemical, temperature, light protected)	Maximum Holding Time (preparation/ analysis)
Tissue	PCB Congener EPA 1668A	Low	US EPA 1668A	10g (including screen)	Double-bagged in food-grade zip-lock bags	Cool to < 6 °C for shipping. Freeze at lab ≤20°C	30 days to extraction 45 days from extraction to analysis
Tissue	Percent lipids	Low	SW-846 8290	10 g	Double-bagged in food-grade zip-lock bags. May be combined with PCB congener sample	Cool to < 6 °C for shipping. Freeze at lab ≤20°C.	45 days to analysis.
Sediment	PCB Congener EPA 1668A	Low	US EPA 1668A	12 g dry weight. (including screen)	Two 125 mL wide mouth glass jars w/PTFE-lined cap	Cool to < 6 °C for shipping. Freeze at lab ≤-10°C.	One year to extraction. 40-days from extraction to analysis
Sediment	Total organic carbon	Low	Lloyd Kahn	10 g	One 125 mL wide mouth glass jar w/PTFE- lined cap	Cool to < 6 °C	14 days to analysis

1. The size and type of the sample container may differ depending upon the requirements of the assigned laboratory.

QAPP Worksheet #20

(UFP-QAPP Manual Section 3.1.1)

The following table summarizes by matrix, analytical group, and concentration level the number of field QC samples that will be collected and sent to the laboratory.

Field Quality Control Sample Summary

Matrix	Analytical Group	Conc. Level	Analytical and Preparation SOP Reference	Approximate No. of Sampling Locations	No. of Field Duplicate Pairs	No. of MS[1]	No. of Unexposed Tissue Samples	No. of Equip. Blanks	No. of PT Samples[2]	Approximate Total No. of Samples to Lab[3]
Tissue	PCB Congener EPA 1668A	Low	US EPA 1668A	6	0	0	1	0	0	7
Tissue	Percent lipids	Low	SW-846 8290	6	0	0	1	0	0	7
Sediment	PCB Congener EPA 1668A	Low	US EPA 1668A	6	1	0	0	1	0	7
Sediment	Total organic carbon	Low	Lloyd Kahn	6	1	1	0	0	0	7

1. Each field sample and QC sample is spiked with isotopically labeled PCBs for method 1668A. Recovery data is generated for toxic congeners and other congeners at each level of chlorination.
2. Standard Reference Materials will be analyzed by the laboratory for each event: Suggested SRMs: NIST 1944 for sediments, NIST 2977 for tissues.
3. Does not include Standard Reference Materials. The laboratory must procure these.

QAPP Worksheet #21-1
(UFP-QAPP Manual Section 3.1.2)

Project Sampling SOP References Table

Reference Number	Title, Revision Date and/or Number	Originating Organization	Equipment Type	Modified for Project Work?	Comments
SOP 001	Procedures for Well Installation and Groundwater Installation, July 2009, Revision No. 1. Long Term Monitoring Plan Final Field Sampling Plan, August 2010, Malcolm Pirnie.	Malcolm Pirnie	Cellulose acetate butyrate (CAB) or similar material tubing (4-inch outer diameter and 12-inch long section), polyethylene end caps sized to fit tubing. 80-µm polypropylene mesh Nalgene tubing (0.5-inch outer diameter) 100 ml glass tubes. Hand tools including drill and ½-inch drill bit, pinch clamps, scissors, silicone caulk, elastic bands, wire tray shovel, 50-µm brass sieve, forceps, large glass dishes, balance. Personnel protective equipment (PPE) - including hard hat, steel toe boots, safety glasses, and clean disposable gloves (nitrile preferred) Measuring tapes, field books, pens, pencils, digital camera, and GPS. Tape – electrical, duct, and clear packing tape Horiba U22XD or equivalent dissolved oxygen sondes, electrodes, thermometers, conductivity instrument.	Yes	Attachment 6

QAPP Worksheet #21-2
(UFP-QAPP Manual Section 3.1.2)

Project Sampling SOP References Table

Reference Number	Title, Revision Date and/or Number	Originating Organization	Equipment Type	Modified for Project Work?	Comments
SOP004	Collecting Surface Sediments Using an Ekman or Ponar Dredge	Malcolm Pirnie	Ekman dredge and materials, PPE, Log sheets, and clear packing tape.	Yes	Attachment 14
SOP005	*In-Situ* Sediment Bioaccumulation Tests with *Lumbriculus Variegatus*	Malcolm Pirnie	Cellulose acetate butyrate (CAB) or similar tubing and polyethylene end caps, 80-µm polypropylene mesh, Nalgene tubing, 100 mL glass tubes, rebar, *Lumbriculus variegatus*, variety of hand tools, PPE, measuring tape, field book, pens, digital camera, GPS unit, and tape – electrical, duct, and clear packing tape	Yes	Attachment 15

QAPP Worksheet #22
(UFP-QAPP Manual Section 3.1.2.4)

Field Equipment Calibration, Maintenance, Testing, and Inspection Table*

Field Equipment	Calibration Activity	Maintenance Activity	Testing Activity	Inspection Activity	Frequency	Acceptance Criteria	Corrective Action	Responsible Person	SOP Reference
Horiba U-22 Field Instrument	Daily Calibrations prior to work start	As detailed in the system operation manual	As detailed in the system operation manual	As detailed in the system operation manual	As detailed in the system operation manual	As detailed in the system operation manual	As detailed in the system operation manual	Field Team Leader	See FSP

* The use of field equipment will be restricted to background information and will not be used for decision making.

Field Instrumentation: The field team leader will be responsible for insuring that these instruments are calibrated before each field sampling event. Field equipment must be inspected and calibrated before use according to the criteria given in the Field Sampling Plan and the SOPs found in the Long Term Monitoring Plan Final Field Sampling Plan, August 2010, Malcolm Pirnie If problems occur with field instruments or equipment which cannot be resolved by the field team personnel they should contact the field team leader. If field equipment fails inspection it is the field team leader's responsibility to investigate and resolve the problem. The Malcolm Pirnie equipment facility manager can also be contacted by the field crew or the field team leader to help resolve problems with field equipment and supply or obtain any spare or replacement parts or equipment.

QAPP Worksheet #23

(UFP-QAPP Manual Section 3.2.1)

Analytical SOP References Table

Reference Number	Title, Revision Date, and/or Number	Definitive or Screening Data	Analytical Group	Instrument	Organization Performing Analysis	Modified for Project Work?
KNOX-OP-0020	Gravimetric Percent Lipids Determination	Definitive	Percent Lipids	Analytical Balance	TestAmerica – Knoxville	No
PT-WC-030, Rev 3	Total Organic Carbon in Soils and Sediments (Lloyd Kahn)	Definitive	Total Organic Carbon	Carbon Analyzer	TestAmerica - Pittsburgh	No
KNOX-ID-0013	Analysis of Polychlorinated Biphenyl (PCB) Isomer by Isotope Dilution HRGC/HRMS, , REV-9, 1/7, 2010, Effective 1/27, 2010	Definitive	PCB Congeners – US EPA Method 1668A	GC/HRMS	TestAmerica – Knoxville	No

Analytical Methods for Tissues and Sediments

TestAmerica Knoxville and Pittsburgh are qualified in the analytical methods listed and, where applicable, accredited through the National Environmental Laboratory Accreditation Program (NELAP), or self-declared as compliment with the applicable requirements of the Department of Defense (DoD) Quality Systems Manual (QSM) for Environmental Laboratories.

QAPP Worksheet #24
(UFP-QAPP Manual Section 3.2.2)

Analytical Instrument Calibration Table

Instrument	Calibration Procedure	Frequency of Calibration	Acceptance Criteria	Corrective Action (CA)	Person Responsible for CA	SOP Reference
TOC Analyzer	See PT-WC-030	See PT-WC-030	See PT-WC-030	See PT-WC-030	Assigned laboratory personnel	PT-WC-030, Attachment 10
Analytical Balance (Lipids)	See KNOX-ID-0004	See KNOX-ID-0004	See KNOX-ID-0004	See KNOX-ID-0004	Assigned laboratory personnel	KNOX-ID-0004, Attachment 9
GC-MS (PCB Congeners)	See KNOX-ID-0013	See KNOX-ID-0013	See KNOX-ID-0013	See KNOX-ID-0013	Assigned laboratory personnel	KNOX-ID-0013, Attachment 12

QAPP Worksheet #25
(UFP-QAPP Manual Section 3.2.3)

Analytical Instrument and Equipment Maintenance, Testing, and Inspection Table

Instrument/ Equipment	Maintenance Activity	Testing Activity	Inspection Activity	Frequency	Acceptance Criteria	Corrective Action	Responsible Person	SOP Reference
Analytical Balance (Percent Lipids)	Per PT-QA-022 and Knox-QA-005[ab]	Defined in PT-QA-022 and Knox-QA-005	Defined in PT-QA-022 and Knox-QA-005	Defined in PT-QA-022 and Knox-QA-005	Defined in PT-QA-022 and Knox-QA-005	Defined in PT-QA-022 and Knox-QA-005	Assigned laboratory personnel	PT-QA-022 (Attachment 13) and KNOX-QA-0005 (Attachment 16)
TOC Analyzer	Per PT-QA-022 [ab]	Defined in PT-QA-022	PT-QA-022	Defined in PT-QA-022	Defined in PT-QA-022	Defined in PT-QA-022	Assigned laboratory personnel	PT-QA-022 (Attachment 13)
GC-High Resolution Mass Spectrometry	Per KNOX-ID-0013[ab]	Defined in KNOX-ID-0013	Defined in KNOX-ID-0013	Defined in KNOX-ID-0013	Defined in KNOX-ID-0013	Defined in KNOX-ID-0013	Assigned laboratory personnel	KNOX-ID-0013 (Attachment 12

a. The maintenance of the analytical instruments including the testing activity, inspection activity, frequency, acceptance criteria, responsible person and SOP reference must be documented in the Laboratory's Quality Control Manual. The associated instrumentation must be maintained according to the laboratory's SOPs and Laboratory Quality Manual.
b. Spare parts and maintenance of laboratory analytical instrumentation are the responsibility of the laboratory.

QAPP Worksheet #26
(UFP-QAPP Manual Appendix A)

Sample Handling System

SAMPLE COLLECTION, PACKAGING, AND SHIPMENT
Sample Collection (Personnel/Organization) Normandeau Associates Field Team, supervised by Malcolm Pirnie Field Team Leader will deploy, maintain and recover the samples.
Sample Packaging (Personnel/Organization). Normandeau Associates Field Team
Coordination of Shipment (Personnel/Organization) Malcolm Pirnie Sample Management Officer
Type of Shipment/Carrier Federal Express for overnight delivery or courier to the laboratory
SAMPLE RECEIPT AND ANALYSIS
Sample Receipt (Personnel/Organization) TestAmerica Knoxville and Pittsburgh personnel
Sample Custody and Storage (Personnel/Organization) TestAmerica Knoxville and Pittsburgh personnel
Sample Preparation (Personnel/Organization) TestAmerica Knoxville and Pittsburgh personnel
Sample Determinative Analysis (Personnel/Organization). TestAmerica Knoxville and Pittsburgh personnel
SAMPLE ARCHIVING
Field Sample Storage (No of days from sample collection) Samples will not be stored in the field, but will be shipped within 24 hours of collection or depuration If, due to an emergency, the samples are stored in the field, they will be kept in a cooler or transferred to a refrigerator kept at 4 degrees C
Sample Extract/Digestate Storage (No of days from extraction/digestion) Sample extraction will be conducted according to the requirements given in Worksheet 19
SAMPLE DISPOSAL
Personnel/Organization TestAmerica Knoxville and Pittsburgh Sample Custodians
Number of Days from Analysis Sample disposal will be conducted according to the requirements given in Worksheet 19

Sample Handling System

Sample handling and custody procedures ensure the timely, correct, and complete analysis of each sample for all parameters requested. A sample is considered to be in someone's custody if it:

- Is in his/her possession
- Is in his/her view, after being in his/her possession
- Is in his/her possession and has been placed in a secure location
- Is in a designated secure area

Sample custody documentation provides a written record of sample collection and analysis. The sample custody procedures provide for specific identification of samples associated with an exact location, the recording of pertinent information associated with the sample, including time of sample collection and any preservation techniques and a chain-of-custody (COC) record that serves as physical evidence of sample custody. Custody procedures will be followed such as indicated in the FSP. The COC record documentation system provides the means to individually identify, track, and monitor each sample from the time of collection through final data reporting.

Field Sample Handling and Custody

Field records provide a means of recording information for each field activity performed at the Site. COC record procedures document pertinent sampling data and all transfers of custody until the samples reach the analytical laboratory. The sample packaging and shipment procedures summarized below will ensure that the samples arrive at the laboratory with the COC record intact. Worksheet 19 lists the specific sample preservation requirements for each test method.

Field Procedures

The general responsibilities of the field team are listed below:

- The field sampler is personally responsible for the care and custody of the samples until they are properly dispatched. As few people as possible should handle the samples.

- The Field Team Leader, or designee, is responsible for entering the proper information in the field logbook, including all pertinent information such as sample identification number, date and time of sample collection, type of analysis, and description of sample location. The information entered into the field logbook will be used to generate the COC record.

- All sample containers will be labeled with the project identification, sample number, matrix, type of analysis required, sampler's initials, sample date and time, and preservation requirements.

- The samples will be properly preserved, bagged, and packed into coolers. The original COC record form will be placed into the cooler and will be shipped to the laboratory.

- The sample management officer (SMO) or designee will review all field activities to determine whether proper custody procedures were followed during the field work and if additional samples are required.

Field Records

The field logbook will provide the means of recording sample collection activities. Entries will be described in as much detail as possible so that persons can reconstruct a particular situation without reliance on memory. At the beginning of each day, the date, start time, weather, and names of all sampling team members present will be entered. The names of visitors to the Site and the purpose of their visit will also be recorded. All field measurements, as well as the instrument(s) used, will be noted.

Samples will be collected following the sampling procedures documented in the FSP. Observations such as sampling conditions or any problems or deviations will also be recorded. Sample identification numbers will be assigned at the time the data are entered in the logbook.

Sample Identification System

All samples collected from the Site must be identified with a sample label in addition to an entry on a COC record. Indelible ink will be used to complete sample labels and handwritten COC records. Each sample shall be identified by a unique sample number assigned by the field team as described in the FSP. The unique sample number will include the location ID.

Sample Labels

Sample labels will require the field team to complete the following information for each sample container:

1. Sample Number (i.e, MB-TS-North-01).
2. Sample Matrix (i.e., Tissue).
3. Parameters to be analyzed.

4. Date of Collection (i.e., month-day-year, 07-01-10).
5. Time of Collection (military time).
6. Preservation Technique Employed (if applicable).
7. Sampler's Name.

QAPP Worksheet #27
(UFP-QAPP Manual Section 3.3.3)

Sample Custody Requirements

Field Sample Custody Procedures (sample collection, packaging, shipment, and delivery to laboratory): Samples will be collected per the procedures described in the LTM FSP and SOP 005. The field sample custody procedures including sample packing, shipment, and delivery requirements are discussed in the text in Worksheets 17 and 26.
Laboratory Sample Custody Procedures (receipt of samples, archiving, disposal): Each laboratory will have a sample custodian who accepts custody of the samples and verifies that the information on the sample labels matches the information on the COC record. The sample custodian will document any discrepancies and will sign and date all appropriate receiving documents. The sample custodian will also document the condition of the samples upon receipt at the laboratory. The laboratory sample custody procedures are discussed further in the following text.
Sample Identification Procedures: The sample identification scheme that will be employed is described in the FSP. Sample labeling procedures are discussed in the text in Worksheet 26.
Chain-of-Custody (COC) Record Procedures: A COC record will accompany the samples from the time of sampling through all transfers of custody.

Sample Custody Requirements:

Chain of Custody Procedure

The following information is typically recorded on manual COC record forms. All COC record forms must be signed in permanent ink:

- Project name and/or project number
- Signature of SMO or designee
- Sampling station number
- Date and time of collection
- Grab or composite sample designation
- Sample matrix
- Sampling location description
- Field identification number
- Analyses required
- Turnaround time requested
- Preservation technique
- Signatures and dates for transfers of custody
- Air express/shipper's bill of lading identification numbers

The COC record serves as an official communication to the laboratory detailing the particular analyses required for each sample. The COC record will accompany the samples from the time of sampling through all transfers of custody. The COC will be kept on file at the laboratory where samples are analyzed and archived. Three copies of the COC record are

created; one copy is retained by the Field Team Leader and two are sent to the laboratory. An electronic copy of each COC record should be also made and kept in the project directory. The SMO or designee completes a COC record to accompany each shipment from the field to the laboratory.

The completed COC record is put in a zip-lock bag and taped to the inside cover of the sample shipping container. If there is more than one container in a shipment, copies of the COC record form will be placed in each container. Each container is then sealed with custody seals and custody is transferred to the laboratory.

Transfer of Custody and Shipment

The custody of samples must be maintained from the time of sampling through shipment and relinquishment to the laboratory. Instructions for transferring custody are given below:

- All samples are accompanied by a COC record. When transferring custody of samples, the individuals relinquishing and receiving will sign, date, and note the time on the COC record. The COC documents sample custody transfer from the SMO or designee, through the shipper, to the analytical laboratory. Since a common carrier will usually not accept responsibility for handling COC records, the name of the carrier is entered under "Received by," the bill-of-lading number is recorded in the comments section, and the COC record form is placed in a zip-lock plastic bag and taped to the inside lid of the lead shipping cooler. Copies of the COC record are placed in each additional cooler in a shipment.

- Samples will be packaged for shipment and either picked up at the Site by the laboratory or dispatched to the appropriate laboratory via overnight delivery service. The LTM FSP contains the proper sample packaging

techniques. A separate COC record must accompany each shipment. Shipping containers will be sealed for shipment to the laboratory. Two custody seals will be signed and applied to each cooler to document that the container was properly sealed and to determine if the container was tampered with during shipment. The custody seals will be placed on the coolers in such a manner that the custody seal will be broken if the cooler were opened (*i.e.*, diagonally opposite corners of the cooler lid).

- The original COC record will accompany the shipment. A copy will be retained by the Field Team Leader.
- If the samples are sent by common carrier or air freight, proper documentation must be maintained. For example, the bill of lading must be retained by the Field Team Leader.

Laboratory Custody Procedures

The following will be addressed in the laboratory custody SOPs:

- A designated sample custodian accepts custody of the samples and verifies that the information on the sample labels matches the information on the COC record. The sample custodian will document any discrepancies and will sign and date all appropriate receiving documents. The sample custodian will also document the condition of the samples upon receipt at the laboratory.
- Once the samples have been accepted by the laboratory, checked and logged in, the samples must be maintained in accordance with laboratory custody and security requirements.

- To ensure traceability of samples while in the possession of the laboratory, a method for sample identification that has been documented in a laboratory SOP will be used to assign laboratory sample numbers.

- The following stages of analysis must be documented by the laboratory:

    - Sample Extraction/Preparation.
    - Sample Analysis.
    - Data Reduction.
    - Data Reporting.

- Laboratory personnel are responsible for the custody of samples until they are returned to the sample custodian.

- When sample analyses and QA checks have been completed in the laboratory, the unused portion of the sample must be stored or disposed of in accordance with the protocols specified in the subcontract agreement. Identifying labels, data sheets, COC records, and laboratory records will be retained until analyses and QA checks are completed in accordance with the protocols specified in the laboratory SOP or the subcontract agreement.

Final Evidence Files

This is the final phase of sample custody. The COC records and sample analysis request form copies are archived in their respective project files. Laboratory custody forms, sample preparation and analysis logbooks, and data packages will become part of the laboratory final evidence file. Other relevant documentation including records, reports, correspondence, logs, pictures, and data review reports will be archived by Malcolm Pirnie.

Sample Holding Times

Information on sample holding times and required preservation for each test method are provided in Worksheet 19.

Sample Packaging and Shipping Requirements

- Custody of samples must be maintained through the shipment of samples to the selected laboratory. All samples will be packaged and shipped at the end of each day unless other arrangements are made with the laboratory. See LTM FSP and WP for a description of the Sample Management and Custody Procedures, as well as sample packing and shipping procedures.

QAPP Worksheet #28-1

(UFP-QAPP Manual Section 3.4)

QC Samples Table

Matrix	Tissue
Analytical Group	PCB Congener EPA 1668A
Concentration Level	Low
Sampling SOP	See Worksheet 21
Analytical Method/ SOP Reference	USEPA 1668A/KNOX-ID-0013
Sampler's Name	To be detemined
Field Sampling Organization	Normandeau Associates
Analytical Organization	TestAmerica Knoxville, TN
No of Sample Locations	See Worksheet 18

QC Sample:	Frequency/Number	Method/SOP QC Acceptance Limits	Corrective Action	Person(s) Responsible for Corrective Action	Data Quality Indicator (DQI)	Measurement Performance Criteria
Unexposed Tissue (Field Blank)	1 per event	Less than EMLs	If greater exposed sample result is less than 10-times the concentration in unexposed samples, disqualify congener from BSAF calculations (flag "U")	Data Validator	Accuracy/Bias	Less than EMLs
Field Duplicates	N/A	N/A	NA	NA	NA	NA

QC Samples Table

Matrix	Tissue
Analytical Group	PCB Congener EPA 1668A
Concentration Level	Low
Sampling SOP	See Worksheet 21
Analytical Method/ SOP Reference	USEPA 1668A/KNOX-ID-0013
Sampler's Name	To be detemined
Field Sampling Organization	Normandeau Associates
Analytical Organization	TestAmerica Knoxville, TN
No of Sample Locations	See Worksheet 18

QC Sample:	Frequency/Number	Method/SOP QC Acceptance Limits	Corrective Action	Person(s) Responsible for Corrective Action	Data Quality Indicator (DQI)	Measurement Performance Criteria
Initial Calibration	At initial set up or when corrective action is taken which may change calibration	% Relative Standard Deviation per the limits in SOP KNOX-ID-0013	Correct problem and repeat the initial calibration	Assigned lab analyst	Accuracy/Bias	% Relative Standard Deviation per the limits in SOP KNOX-ID-0013
Continuing Calibration Verification	Every 12 hours and at the end of the 12 hour shift	Recoveries per lab acceptance limits for US EPA 1668A in SOP KNOX-ID-0013, Section 10 4 5	Identify root cause and, if necessary, recalibrate the instrument Re-analyze any affected samples	Assigned lab analyst	Accuracy/Bias	Recoveries per lab acceptance limits for US EPA 1668A in SOP KNOX-ID-0013, Table 6 Section 10 4 5

QC Samples Table

Matrix	Tissue
Analytical Group	PCB Congener EPA 1668A
Concentration Level	Low
Sampling SOP	See Worksheet 21
Analytical Method/ SOP Reference	USEPA 1668A/KNOX-ID-0013
Sampler's Name	To be detemined
Field Sampling Organization	Normandeau Associates
Analytical Organization	TestAmerica Knoxville, TN
No of Sample Locations	See Worksheet 18

QC Sample:	Frequency/Number	Method/SOP QC Acceptance Limits	Corrective Action	Person(s) Responsible for Corrective Action	Data Quality Indicator (DQI)	Measurement Performance Criteria
Initial Precision and Recovery (IRA)	Prior to analyzing samples	Recoveries per lab acceptance limits for US EPA 1668A in SOP KNOX-ID-0013, Table 10	Correct the problem and repeat	Assigned lab analyst	Accuracy/Bias	Recoveries per lab acceptance limits for US EPA 1668A in SOP KNOX-ID-0013, Table 10
Ongoing Precision and Recovery (OPR)	Every batch of 20 samples of less	Recoveries per lab acceptance limits in SOP KNOX-ID-0013, Table 10	The entire sample batch should be re-extracted and re-analyzed If no more sample volume is available, flag the data and record in the case narrative	Assigned lab analyst	Accuracy/Bias	Recoveries per lab acceptance limits in SOP KNOX-ID-0013, Table 10

QC Samples Table

Matrix	Tissue
Analytical Group	PCB Congener EPA 1668A
Concentration Level	Low
Sampling SOP	See Worksheet 21
Analytical Method/ SOP Reference	USEPA 1668A/KNOX-ID-0013
Sampler's Name	To be detemined
Field Sampling Organization	Normandeau Associates
Analytical Organization	TestAmerica Knoxville, TN
No of Sample Locations	See Worksheet 18

QC Sample:	Frequency/Number	Method/SOP QC Acceptance Limits	Corrective Action	Person(s) Responsible for Corrective Action	Data Quality Indicator (DQI)	Measurement Performance Criteria
Internal Standard Spiking Solution	Every Sample	Recoveries ≥ 25%	Evaluate signal-to-noise and EDLs See SOP KNOX-ID-0013 Section 9 2 1	Assigned lab analyst	Accuracy/Bias	Recoveries per lab acceptance limits in SOP KNOX-ID-0013
Method Blanks (MB)	Per batch of field samples	EPA 1668A/SOP KNOX-ID-0013 Less than the EML	The entire sample batch should be re-extracted and re-analyzed If no more sample volume is available, flag the data and record in the case narrative	Assigned lab analyst	Sensitivity, Accuracy/Bias	Less than the EML

QC Samples Table

Matrix	Tissue
Analytical Group	PCB Congener EPA 1668A
Concentration Level	Low
Sampling SOP	See Worksheet 21
Analytical Method/ SOP Reference	USEPA 1668A/KNOX-ID-0013
Sampler's Name	To be detemined
Field Sampling Organization	Normandeau Associates
Analytical Organization	TestAmerica Knoxville, TN
No of Sample Locations	See Worksheet 18

QC Sample:	Frequency/Number	Method/SOP QC Acceptance Limits	Corrective Action	Person(s) Responsible for Corrective Action	Data Quality Indicator (DQI)	Measurement Performance Criteria
Method Detection Limit Study	Annually, or when procedure is modified	Less than EML	MDL study must be acceptable before samples can begin Repeat if necessary	Assigned lab analyst	Sensitivity	Low enough to support the QLs
Sample-Specific Estimated Detection Limit	Calculated for each analytical result	Less than the Sample Specific EML	If the elevation is caused by sample matrix, discuss in narrative · If the elevation occurs on method blank, reanalyze the batch	Assigned lab analyst	Sensitivity	Low enough to support the QLs

QC Samples Table

Matrix	Tissue
Analytical Group	PCB Congener EPA 1668A
Concentration Level	Low
Sampling SOP	See Worksheet 21
Analytical Method/ SOP Reference	USEPA 1668A/KNOX-ID-0013
Sampler's Name	To be detemined
Field Sampling Organization	Normandeau Associates
Analytical Organization	TestAmerica Knoxville, TN
No of Sample Locations	See Worksheet 18

QC Sample:	Frequency/Number	Method/SOP QC Acceptance Limits	Corrective Action	Person(s) Responsible for Corrective Action	Data Quality Indicator (DQI)	Measurement Performance Criteria
Standard Reference Material NIST 2977 or Equivalent	Once per event	RPD between results and certified values ≤ 40%	Address outliers in narrative Evaluate extraction method if overall recoveries average ≤ 70% of certified values	Assigned lab analyst	Accuracy	RPD between results and certified values ≤ 40%
The assigned laboratory also must perform and meet or exceed all measurement performance criteria that assess the analytical DQIs specified in US EPA 1668A including initial and ongoing studies to demonstrate precision and accuracy, calibration verification, internal standards added to all extracts, cleanup standards and laboratory control standards for accuracy, and blanks and method detection limits for sensitivity The lab personnel must follow all the corrective actions required by the US EPA 1668A, except where expressly stated as an exception in the SOP						

QAPP Worksheet #28-2
(UFP-QAPP Manual Section 3.4)

QC Samples Table

Matrix	Sediment
Analytical Group	PCB Congener EPA 1668A
Concentration Level	Low
Sampling SOP	See Worksheet 21
Analytical Method/ SOP Reference	USEPA 1668A/KNOX-ID-0013
Sampler's Name	To be determined
Field Sampling Organization	Normandeau Asociates
Analytical Organization	TestAmerica Knoxville, TN
No of Sample Locations	See Worksheet 18

QC Sample:	Frequency/Number	Method/SOP QC Acceptance Limits	Corrective Action	Person(s) Responsible for Corrective Action	Data Quality Indicator (DQI)	Measurement Performance Criteria
Equipment Blank	Once at beginning of sediment sample collection	QAPP	Investigate source of contamination	Malcolm Pirnie Field Team Leader	Sensitivity and Accuracy	Less than QLs
Field Duplicates	N/A	N/A	NA	NA	NA	NA
Initial Calibration	At initial set up or when corrective action is taken that may change calibration	% Relative Standard Deviation per the limits in SOP KNOX-ID-0013	Correct problem and repeat the initial calibration	Assigned laboratory analyst	Accuracy/Bias	% Relative Standard Deviation per the limits in SOP KNOX-ID-0013

QC Samples Table

Matrix	Sediment
Analytical Group	PCB Congener EPA 1668A
Concentration Level	Low
Sampling SOP	See Worksheet 21
Analytical Method/ SOP Reference	USEPA 1668A/KNOX-ID-0013
Sampler's Name	To be determined
Field Sampling Organization	Normandeau Asociates
Analytical Organization	TestAmerica Knoxville, TN
No of Sample Locations	See Worksheet 18

QC Sample:	Frequency/Number	Method/SOP QC Acceptance Limits	Corrective Action	Person(s) Responsible for Corrective Action	Data Quality Indicator (DQI)	Measurement Performance Criteria
Continuing Calibration Verification	Every 12 hours and at the end of the 12 hour shift	Recoveries per lab acceptance limits for US EPA 1668A in SOP KNOX-ID-0013, Section 10 4.5	Identify root cause and, if necessary, recalibrate the instrument Re-analyze any affected samples	Assigned laboratory analyst	Accuracy/Bias	Recoveries per lab acceptance limits for US EPA 1668A in SOP KNOX-ID-0013, Table 6 Section 10 4 5
Initial Precision and Recovery (IRA)	Prior to analyzing samples	Recoveries per lab acceptance limits for US EPA 1668A in SOP KNOX-ID-0013, Table 10	Correct the problem and repeat	Assigned laboratory analyst	Accuracy/Bias	Recoveries per lab acceptance limits for US EPA 1668A in SOP KNOX-ID-0013, Table 10.

QC Samples Table

Matrix	Sediment
Analytical Group	PCB Congener EPA 1668A
Concentration Level	Low
Sampling SOP	See Worksheet 21
Analytical Method/ SOP Reference	USEPA 1668A/KNOX-ID-0013
Sampler's Name	To be determined
Field Sampling Organization	Normandeau Asociates
Analytical Organization	TestAmerica Knoxville, TN
No of Sample Locations	See Worksheet 18

QC Sample:	Frequency/Number	Method/SOP QC Acceptance Limits	Corrective Action	Person(s) Responsible for Corrective Action	Data Quality Indicator (DQI)	Measurement Performance Criteria
Ongoing Precision and Recovery (OPR)	Every batch of 20 samples of less	Recoveries per lab acceptance limits in SOP KNOX-ID-0013, Table 10	The entire sample batch should be re-extracted and re-analyzed If no more sample volume is available, flag the data and record in the case narrative	Assigned laboratory analyst	Accuracy/Bias	Recoveries per lab acceptance limits in SOP KNOX-ID-0013, Table 10
Internal Standard Spiking Solution	Every sample	Recoveries ≥ 25%	Evaluate signal-to-noise and EDLs See SOP KNOX-ID-0013 Section 9.2 1)	Assigned laboratory analyst	Accuracy/Bias	Recoveries per lab acceptance limits in SOP KNOX-ID-0013

QC Samples Table

Matrix	Sediment
Analytical Group	PCB Congener EPA 1668A
Concentration Level	Low
Sampling SOP	See Worksheet 21
Analytical Method/ SOP Reference	USEPA 1668A/KNOX-ID-0013
Sampler's Name	To be determined
Field Sampling Organization	Normandeau Asociates
Analytical Organization	TestAmerica Knoxville, TN
No of Sample Locations	See Worksheet 18

QC Sample:	Frequency/Number	Method/SOP QC Acceptance Limits	Corrective Action	Person(s) Responsible for Corrective Action	Data Quality Indicator (DQI)	Measurement Performance Criteria
Method Blanks (MB)	Per batch of field samples	As specified in SOP KNOX-ID-0013 Less than the EML	The entire sample batch should be re-extracted and re-analyzed If no more sample volume is available, flag the data and record in the case narrative	Assigned laboratory analyst	Sensitivity, Accuracy/Bias	Less than the EML
Method Detection Limit Study	Annually, or when procedure is modified	Less than EML	MDL study must be acceptable before samples can begin Repeat if necessary	Assigned laboratory analyst	Sensitivity	Low enough to support the QLs

QC Samples Table

Matrix	Sediment
Analytical Group	PCB Congener EPA 1668A
Concentration Level	Low
Sampling SOP	See Worksheet 21
Analytical Method/ SOP Reference	USEPA 1668A/KNOX-ID-0013
Sampler's Name	To be determined
Field Sampling Organization	Normandeau Asociates
Analytical Organization	TestAmerica Knoxville, TN
No of Sample Locations	See Worksheet 18

QC Sample:	Frequency/Number	Method/SOP QC Acceptance Limits	Corrective Action	Person(s) Responsible for Corrective Action	Data Quality Indicator (DQI)	Measurement Performance Criteria
Standard Reference Material NIST 1944 or Equivalent	Once per event	RPD between results and certified values ≤ 40%	Address outliers in narrative Evaluate extraction method if overall recoveries average ≤ 70% of certified values	Assigned laboratory analyst	Accuracy	RPD between results and certified values ≤ 40%

QC Samples Table

Matrix	Sediment
Analytical Group	PCB Congener EPA 1668A
Concentration Level	Low
Sampling SOP	See Worksheet 21
Analytical Method/ SOP Reference	US EPA 1668A/KNOX-ID-0013
Sampler's Name	To be determined
Field Sampling Organization	Normandeau Associates
Analytical Organization	TestAmerica Knoxville, TN
No of Sample Locations	See Worksheet 18

QC Sample:	Frequency/Number	Method/SOP QC Acceptance Limits	Corrective Action	Person(s) Responsible for Corrective Action	Data Quality Indicator (DQI)	Measurement Performance Criteria
The assigned laboratory also must perform and meet all the measurement performance criteria that assess the analytical DQIs specified in US EPA 1668A including initial and ongoing studies to demonstrate precision and accuracy, calibration verification, internal standards added to all extracts, cleanup standards and laboratory control standards for accuracy, and blanks and method detection limits for sensitivity The lab personnel must follow all the corrective actions required by the US EPA 1668A						

QAPP Worksheet #28-3
(UFP-QAPP Manual Section 3.4)

QC Samples Table

Matrix	Sediment
Analytical Group	Total Organic Carbon
Concentration Level	Low
Sampling SOP	See Worksheet 21
Analytical Method/ SOP Reference	Lloyd Kahn Method/TestAmerica SOP No PT-WC-030, Rev 3
Sampler's Name	To be determined
Field Sampling Organization	Normandeau Associates
Analytical Organization	TestAmerica Pittsburgh
No. of Sample Locations	See Worksheet 18

QC Sample:	Frequency/Number	Method/SOP QC Acceptance Limits	Corrective Action	Person(s) Responsible for Corrective Action	Data Quality Indicator (DQI)	Measurement Performance Criteria
Equipment Blank	N/A	NA	NA	NA	NA	NA
Field Duplicates	N/A	NA	NA	NA	NA	NA
Initial Calibration	Prior to analyzing samples	PT-WC-030-008	Repeat if necessary	Assigned laboratory analyst	Accuracy/Bias	Per lab SOP, minimum of five concentrations , RSDs ≤20% or RSD≥0 995

QC Samples Table

Matrix	Sediment
Analytical Group	Total Organic Carbon
Concentration Level	Low
Sampling SOP	See Worksheet 21
Analytical Method/ SOP Reference	Lloyd Kahn Method/TestAmerica SOP No PT-WC-030, Rev 3
Sampler's Name	To be determined
Field Sampling Organization	Normandeau Associates
Analytical Organization	TestAmerica Pittsburgh
No of Sample Locations	See Worksheet 18

QC Sample:	Frequency/Number	Method/SOP QC Acceptance Limits	Corrective Action	Person(s) Responsible for Corrective Action	Data Quality Indicator (DQI)	Measurement Performance Criteria
Calibration Verification	1 per 20 analyses and at end of analytical sequence	Per SOP PT-WC-030, ≤ 15% Drift	Re-prepare and re-analyze samples Correct before analyzing samples	Assigned laboratory analyst	Accuracy/Bias	Per SOP PT-WC-030, ≤ 15% Drift
Matrix Spike/Matrix Spike Duplicate (MS/MSD)	With every batch of 20 samples or less	Per SOP PT-WC-030, ≤ 25% Drift	Discuss the outlier in the project narrative	Assigned laboratory analyst	Accuracy/Bias /Precision	Per SOP PT-WC-030, ≤ 25% Drift
Laboratory Control Samples (LCS)	With every batch of 20 samples or less	Per SOP PT-WC-030, ≤ 25% Drift	Re-prepare and re-analyze the batch of samples	Assigned laboratory analyst	Accuracy/Bias /Precision	Per SOP PT-WC-030, ≤ 25% Drift

QC Samples Table

Matrix	Sediment
Analytical Group	Total Organic Carbon
Concentration Level	Low
Sampling SOP	See Worksheet 21
Analytical Method/ SOP Reference	Lloyd Kahn Method/TestAmerica SOP No PT-WC-030, Rev 3
Sampler's Name	To be determined
Field Sampling Organization	Normandeau Associates
Analytical Organization	TestAmerica Pittsburgh
No of Sample Locations	See Worksheet 18

QC Sample:	Frequency/Number	Method/SOP QC Acceptance Limits	Corrective Action	Person(s) Responsible for Corrective Action	Data Quality Indicator (DQI)	Measurement Performance Criteria
Method Detection Limits	At least annually	MDL ≤ 500 ppm	Correct the problem and determine method detection limits before analyzing samples	Assigned laboratory analyst	Sensitivity	Low enough to support the QLs
Method Blanks	With every batch of 20 samples or less	Result must be less than QL	Re-prepare and re-analyze affected samples	Assigned laboratory analyst	Accuracy/Bias /Sensitivity	Blanks must be low enough to support the method QL

QAPP Worksheet #28-4
(UFP-QAPP Manual Section 3.4)

QC Samples Table

Matrix	Tissue
Analytical Group	Percent Lipids
Concentration Level	Low
Sampling SOP	See Worksheet 21
Analytical Method/ SOP Reference	SW-8290/ SOP Knox-OP-0020
Sampler's Name	To be determined
Field Sampling Organization	Normandeau Associates
Analytical Organization	TestAmerica Knoxville
No of Sample Locations	See Worksheet 18

QC Sample:	Frequency/Number	Method/SOP QC Acceptance Limits	Corrective Action	Person(s) Responsible for Corrective Action	Data Quality Indicator (DQI)	Measurement Performance Criteria
Equipment Blank	N/A	N/A	N/A	N/A	N/A	N/A
Field Duplicates	N/A	N/A	N/A	N/A	N/A	N/A
Daily Calibration Check	Prior to analyzing samples	Per Knox-QA-0005 & Knox-OP-0020	Repeat if necessary	Assigned laboratory analyst	Accuracy/Bias	Per Knox-QA-0005 & Knox-OP-0020

QC Samples Table

Matrix	Tissue
Analytical Group	Percent Lipids
Concentration Level	Low
Sampling SOP	See Worksheet 21
Analytical Method/ SOP Reference	SW-8290/ SOP Knox-OP-0020
Sampler's Name	To be determined
Field Sampling Organization	Normandeau Associates
Analytical Organization	TestAmerica Knoxville
No of Sample Locations	See Worksheet 18

QC Sample:	Frequency/Number	Method/SOP QC Acceptance Limits	Corrective Action	Person(s) Responsible for Corrective Action	Data Quality Indicator (DQI)	Measurement Performance Criteria
LCS	With every batch of 20 samples or less	Per Knox-OP-0020 70 -130 % recovery	Investigate and correct the problem Repeat LCS, and if necessary, re-extract and re-analyze affected samples	Assigned laboratory analyst	Accuracy/Bias	70 -130% recovery of spiked soybean oil
MDLs	At least annually	MDL below QL	Correct the problem and determine method detection limits before analyzing samples	Assigned laboratory analyst	Sensitivity	Low enough to support the QLs
Method Blanks	With every batch of samples	MB below QL	Investigate and correct the problem Re-extract and reanalyze samples	Assigned laboratory analyst	Sensitivity, Accuracy/Bias	Per SOP PT-GC-001 less than the QLs or ≤ 10% of the analyte concentration found

QAPP Worksheet #29
(UFP-QAPP Manual Section 3.5.1)
This section identifies the documents and records that will be generated for all aspects of the project including, but not limited to, sample collection and field measurement, on- and off-Site analysis, and data assessment.

Project Documents and Records Table

Sample Collection Documents and Records:

- Field notes and or data sheets
- Boring logs
- Chain-of-custody forms
- Air bills
- Analytical and testing sample data packages
- Data validation reports

On-Site Activities Documents and Records:

- Sample collection and processing record and custody records.
- Sample custody records
- Air bills
- Custody records
- Copies of field notes

Off-Site Analysis Documents and Records

- COC records will be made and stored in the project files
- Copies of air bills will be kept in project files
- Copies of all analytical data deliverables stored in the laboratory and transferred to Project files, instrument calibration records, lab, raw data stored in electronically or in hardcopy. Laboratory EDD will be maintained in a US EPA Region 3 compliant format.

Data Assessment Documents and Records

- Project records: Copies of all field notes must be sent to Malcolm Pirnie
- Project records: Copies of COC records must be kept by Malcolm Pirnie
- Field and/or laboratory inspection reports/checklists
- Corrective action documentation
- Data validation narratives
- QA Review sheet
- Copies of Form 1
- Final Report

Data Management

This section describes the project data management process, tracing the path of the data from their generation to their final use or storage. All project data and information must be documented in a format useable to the project personnel.

Project Document Control System

Project documents will be controlled by the Malcolm Pirnie Technical Project Manager and the Deputy Project Manager who will maintain and distribute the hardcopies and electronic copies of the project documents, including any amendments. Electronic copies of project information will be maintained in the project directory on the server at Malcolm Pirnie in Wilmington, DE, which is backed up at least once per month.

Data Recording

Data for this project will be collected by handwritten entries and will be recorded into field logbooks or on forms.

Laboratory Data Transmittal

Laboratory data are managed by the laboratory's LIMS system, beginning with sample check-in on the sample receiving data terminal. Full laboratory data reports will be delivered to Malcolm Pirnie and will include EDDs.

Data Storage and Retrieval

Paper copies of forms, electronic copies of files, and the photographic log will be transmitted regularly to the Malcolm Pirnie PM or designee. Completed forms and notebooks will be stored in the custody of the PM for the duration of the project. The full laboratory data reports submitted to Malcolm Pirnie will be stored in the custody of the Project Quality Manager. The Laboratory will maintain copies of documents and backups of all data associated with the analyses of samples. Raw data and electronic media of all field samples, including QC samples and blanks, will be archived from the date of generation and will be kept by the laboratory. Hard copies of project files will be archived at a secure facility and retained until the end of the contract. The length of time that records will be archived will be at the discretion of the US EPA.

Each laboratory shall archive, electronically, sample data and submit electronic data files along with the data deliverable package.

QAPP Worksheet #30
(UFP-QAPP Manual Section 3.5.2.3)

Analytical Services Table

Matrix	Analytical Group	Concentration Level	Sample Location/ID Numbers	Analytical SOP	Data Package Turnaround Time	Laboratory/Organization (Name and Address, Contact Person and Telephone Number)	Backup Laboratory/Organization (Name and Address, Contact Person and Telephone Number [1]
Tissues	PCB Congener EPA 1668A	Low	See Worksheet 18 and LTM WP	US EPA 1668A and KNOX-ID-0013 (Sample Preparation by Knox-OP-0021)	Est 35 days	TestAmerica Knoxville 5815 Middlebrook Pike Knoxville, TN 37921 Attn Sample Custodian (865) 291-3000	A backup lab has not been assigned at this time.
Tissues	Percent Lipids	Low	See Worksheet 18 and LTM WP	SW-846 8290 and KNOX-OP-0020	Est 35 days	TestAmerica Knoxville 5815 Middlebrook Pike Knoxville, TN 37921 Attn Sample Custodian (865) 291-3000	A backup lab has not been assigned at this time
Sediment	PCB Congener EPA 1668A	Low	See Worksheet 18 and LTM WP	US EPA 1668A and KNOX-ID-0013 (Sample Preparation by Knox-OP-0021)	Est 35 days	TestAmerica Knoxville 5815 Middlebrook Pike Knoxville, TN 37921 Attn Sample Custodian (865) 291-3000	A backup lab has not been assigned at this time
Sediment	Total Organic Carbon	Low	See Worksheet 18 and LTM WP	Lloyd Kahn PT-WC-030	Est 15 days	TestAmerica Pittsburgh 301 Alpha Drive RIDC Park Pittsburgh, PA 15238 Attn. Sample Custodian (412) 963-2468	A backup lab has not been assigned at this time.

1 Backup subcontractor laboratories may be selected at a future date pending procurement by Malcolm Pirnie and approval by the US EPA.

QAPP Worksheet #31
(UFP-QAPP Manual Section 4.1.1)

Planned Project Assessments Table

Assessment Type	Frequency	Internal or External	Organization Performing Assessment	Person(s) Responsible for Performing Assessment (Title and Organizational Affiliation)	Person(s) Responsible for Responding to Assessment Findings (Title and Organizational Affiliation)	Person(s) Responsible for Identifying and Implementing Corrective Actions (CA) (Title and Organizational Affiliation)	Person(s) Responsible for Monitoring Effectiveness of CA (Title and Organizational Affiliation)
QC Reports of any non-conformance	Daily as required	Internal	Malcolm Pirnie	Field Team Members	Malcolm Pirnie Project Quality Officer	Malcolm Pirnie PM or designees	Malcolm Pirnie Project Quality Officer
Field Safety Audit	Initially within the first week of field work and then at least quarterly, if necessary	Internal	Malcolm Pirnie	Malcolm Pirnie Project Safety Officer or designee	Malcolm Pirnie PM	Malcolm Pirnie PM or designees	Malcolm Pirnie Project Safety Officer
Technical System Audit	Initially within the first week and then at least quarterly, if necessary	Internal	Malcolm Pirnie	Malcolm Pirnie Project Quality Officer or designee	Malcolm Pirnie PM	Malcolm Pirnie PM or designees	Malcolm Pirnie Project Quality Officer
Technical System Audit	Initially within the first week	External	US EPA	US EPA-assigned	Malcolm Pirnie PM	Malcolm Pirnie PM or designees	Malcolm Pirnie Project Quality Officer

QAPP Worksheet #32
(UFP-QAPP Manual Section 4.1.2)

Assessment Findings and Corrective Action Responses

Assessment Type	Nature of Deficiencies Documentation	Individual(s) Notified of Findings (Name, Title, Organization)	Timeframe of Notification	Nature of Corrective Action Response Documentation	Individual(s) Receiving Corrective Action Response (Name, Title, Org.)	Timeframe for Response
Non-Conformance	See below	Project Quality Officer	As soon as possible	Complete non-conformance form	PM	As soon as possible
Technical System Field Audits (TSAs)	See Technical Systems Audit report SOP 6 in Attachment 5	Project Quality Officer, PM or designees, Malcolm Pirnie	Within week	See below section on Field Corrective Actions	Field Team Leader and PM	Within week
Internal Laboratory Audits	Per Laboratory Quality Manual	Laboratory Management or designee	Annually	Per Laboratory Quality Manual	Laboratory Personnel	Per Laboratory Quality Manual

Non-Conformance/QC Reporting

A non-conformance is defined as an identified or suspected deficiency or discrepancy with regard to an approved document (*e.g.*, improper sampling procedures, improper instrument calibration, calculation, computer program); or an item where the quality of the end product itself or subsequent activities using the document or item would be affected by the deficiency; or an activity that is not conducted in accordance with the established plans or procedures.

Any staff member engaged in project work that discovers or suspects a non-conformance is responsible for initiating a non-conformance report to the Project QC Officer. The Project QC Officer will evaluate each non-conformance report and the Project QC Officer will provide a disposition that describes the actions to be taken.

The Malcolm Pirnie PM will verify that no further project work dependent on the nonconforming item or activity is performed until approval is obtained and the non-conformance is properly addressed. If the non-conformance is related to equipment, the Malcolm Pirnie PM shall be responsible for marking or identifying, with the non-conformance report number, the nonconforming item (if practical) and indicating that it is nonconforming and is not to be used.

A copy of each non-conformance report will be included in the project file. Copies of all non-conformances shall be maintained by the Project QC Officer.

Assessment and Oversight

This element addresses assessment of the effectiveness of the project implementation and associated QA/QC activities.

Assessment and Response Actions

To monitor the capability and performance of the FSP activities, several types of audits will be performed. These audits will be conducted by the PQO or designee. Performance audits (PAs) of laboratories are conducted to measure the accuracy of the measurement systems. Data Quality Audits (DQAs) are conducted to determine if the data generated by the sampling and analysis satisfy the project quality objectives, as described in Worksheet 11.

Technical System Audits (TSAs)

Field audits will be conducted on an ongoing basis during the project as field data are generated, reduced, and analyzed. Numerical manipulations, including manual calculations, will be documented. Records of numerical analyses will be legible, of reproduction-quality, and sufficiently complete to permit logical reconstruction by a qualified individual other than the originator. System audits of work activities will be accomplished by an inspection of field activities. During this audit, the auditor(s) will compare current field practices with standard procedures. The following elements will be

evaluated during a TSA:

- The performance of procedures and analyses relative to the procedures and analyses outlined in the FSP
- The maintenance proper sample documentation.
- The proper checking and recording of the working order of field instruments and equipment.
- The level of QC conducted per each field team
- The performance of proper decontamination procedures, where applicable
- The implementation of appropriate sample packaging and shipment protocols

TSAs are conducted for each field team at the beginning of each field sampling task to determine if the system is capable of producing data that meet the project quality objectives described in Worksheet 11. As long as the field team(s) demonstrate proficiency in the sampling procedures being audited, a follow-up audit will not be required. However, if the audit indicates the need for corrective action, a second TSA will be required. Following the initial audit, TSAs will be conducted on the following schedule:

- Whenever key personnel leave the project or new key personnel are added to the project.
- Whenever a significant amount of time (more than 6 months) has elapsed between TSAs for a particular field task.

Any minor deficiencies that are noted during the TSA will be corrected in the field as they occur. If major deficiencies are noted (*i.e.*, those that cannot be immediately corrected in the field), a Stop-Work Order will be issued until appropriate measures can be taken to correct the problem. A Stop-Work Order may be issued by the Project QC Officer, following notification to the Malcolm Pirnie PM. The conditions and the need for a Stop-Work Order will be documented in sufficient detail to permit evaluation of the deficiency and determination of proper corrective action(s). Pertinent communications with the Project QC Officer, Field Team Leader, DPM, and Malcolm Pirnie PM that pertain to an evaluation of the problem along with potential solutions and their implementation will be attached to the Stop-Work Order. In order for work to resume following a Stop-Work Order, the Malcolm Pirnie PM and Project QC Officer must rescind the order in writing.

The Project QC Officer is responsible for tracking non-conforming conditions, evaluating the effectiveness of corrective measures, and assuring that the necessary steps have been taken to prevent recurrence of the original problem.

Regardless of whether major, minor, or no deficiencies were noted during the audit, a written report of the TSA will be prepared by the Project QC Officer and submitted to the Malcolm Pirnie and US EPA PMs as well as the Field Team Leader and the field team. This report will identify any deficiencies found and will outline the corrective actions that were recommended/implemented to address them.

Field Corrective Actions

At the end of each sampling day, the sampling team is to report any problems requiring corrective action that were encountered during the day. Corrective action will be undertaken when a non-conforming condition is identified. A non-conforming condition occurs when QA objectives for precision, accuracy, completeness, representativeness, or comparability are not met, or when procedural practices or other conditions are not acceptable. A report is to be filed that documents the problems encountered and the corrective action implemented. A Stop-Work Order may be issued by the Project QC Officer, following notification to the Malcolm Pirnie PM, if corrective action does not adequately address a problem, or if no resolution can be reached.

Internal Laboratory Audits

As part of its QA program, the Laboratory Quality Assurance Manager (QAM) will conduct periodic checks and audits of the analytical systems to ensure that the systems are working properly and personnel are adhering to established procedures and documenting the required information. These checks and audits will also assist in determining or detecting where problems are occurring.

In addition to conducting internal reviews and audits, as part of its established QA program the laboratory is required to take part in regularly scheduled Performance Evaluations and laboratory audits from State and Federal agencies for applicable tests. Each laboratory selected to support this program must maintain current PA DEP or Federal certifications, as appropriate.

Laboratory Corrective Actions

If a particular laboratory analysis is deemed "out of control," corrective action will be taken by the laboratory to maintain continued data quality. Each laboratory must adhere to their in-house corrective action policy. The coordinator of the laboratory's analytical section will be responsible for initiating laboratory corrective action when necessary.

Data Quality Audits (DQAs)

DQAs are conducted to determine if the data are adequate to support the project quality objectives and to determine the cause of deficiencies in the event that the data quality is not adequate. This audit is conducted by the Project QC Officer or his designee after the data have been fully validated. The Project QC Officer will first determine to what extent the data can be used to support the decision making process. If the data are deficient, the Project QC Officer will identify the cause of the deficiency and will determine what modifications need to be made (*e.g.*, request that the laboratory analyze a larger volume sample or employ an alternate or modified method to lower the RLs so that subsequent data are acceptable.)

QAPP Worksheet #33
(UFP-QAPP Manual Section 4.2)

QA Management Reports Table

Type of Report	Frequency (daily, weekly monthly, quarterly, annually, etc.)	Projected Delivery Date(s)	Person(s) Responsible for Report Preparation (Title and Organizational Affiliation)	Report Recipient(s) (Title and Organizational Affiliation)
Progress Reports	Monthly	End of each following month	Malcolm Pirnie PM or DPM	US EPA RPM
Technical System Field Internal Audit	Initally within the first two weeks of field work and with follow up audits if significant deficiencies are found	Month after field work begins	Project QC Officer or designee	US EPA RPM
Data Validation Report	After laboratory data are received	Within one month after receiving data	Environmental Standards Data Validator	Project QC Officer and PM(s)
Corrective Action Reports	When corrective action is required	When corrective action is implemented	Malcolm Pirnie PM or designee	Project Team and PM(s)

The USEPA RPM will receive several types of management reports. These will include the results of any corrective action reports. In addition, progress report will contain a section on quality control reports. Problems or issues that arise between regular reporting periods may be identified to program management at any time. Information included in the progress report will include the following:

- Results of Technical System Field Audits conducted during the period
- An assessment of any problems with the measurement data, including accuracy, precision, completeness, representativeness, and comparability
- A listing of the non-conformance reports, including Stop-Work Orders issued during the period, related corrective actions undertaken, and an assessment of the results of these actions
- Identification of significant quality assurance problems and recommended solutions, as necessary

QAPP Worksheet #34
(UFP-QAPP Manual Section 5.2.1)

This worksheet and text section describes the processes that will be followed to verify project data. Verification inputs include items such as those listed in Table 9 of the UFP-QAPP Manual (Section 5.1). "Internal" or "external" is in relation to the data generator.

Verification (Step I) Process Table

Verification Input	Description	Internal (I)/ External (E)	Responsible for Verification (Name, Organization)
Chain of custody (COC) Record	Form will be internally reviewed upon completion and verified against field logs and laboratory reports. Review will occur with the completetion of each report.	I	Malcolm Pirnie
Field report	Field reports will be verified with the field logbooks.	I	Malcolm Pirnie
Laboratory data packages	Laboratory data packages will be used to verify the reported results in the project report and against QAPP criteria.	I	Malcolm Pirnie or designee

Data Verification

- The Field Team Leader or designee is required to review the logbook entries for errors or omissions. This information is transmitted to the Project QC Officer or designee for correction.
- In addition, the Project QC Officer or designee is responsible for reviewing field data for completeness and for verifying that the field crew followed the QC requirements detailed in this QAPP (*e.g.*, the collection of QC samples at the required frequency, response checking the field instruments). If any problems with the information are found, the Project QC Officer or designee will document the problems.
- The Project QC Officer or designee reviews the field data.

QAPP Worksheet #35
(UFP-QAPP Manual Section 5.2.2)

This worksheet describes the processes that will be followed to validate project data. Validation inputs include items such as those listed in Table 9 of the UFP-QAPP Manual (Section 5.1). This worksheet describes how each item will be validated, when the activity will occur, what documentation is necessary, and who is responsible for the validation effort. It also differentiates between steps IIa and IIb of validation.

Validation (Steps IIa and IIb) Process Table

Step IIa/IIb	Validation Input	Description	Responsible for Validation (Name, Organization)
IIa	Methods	Records supporting implementation of SOP in QAPP.	Environmental Standards
IIa	Chain of custody	Examine traceability of data from sample collection to generation of project report	Environmental Standards
IIb	Deviations from SOP and project documents.	Determine impacts of any deviation from method and the project plan.	Environmental Standards

QAPP Worksheet #36
(UFP-QAPP Manual Section 5.2.2)

This worksheet and text section identifies the matrices, analytical groups, and concentration levels for which each entity performing validation will be responsible, as well as criteria that will be used to validate data.

Validation (Steps IIa and IIb) Summary Table

Step IIa/IIb	Matrix	Analytical Group[1]	Concentration Level	Validation Criteria	Data Validator (title and organizational affiliation)[1]
IIa/IIb	Sediments and tissues	Chemical parameters	Low	US EPA Region 3 validation criteria.Evaluated at Region 3 Level M3.	Steven Zeiner and David Thal. Senior QA Chemists Environmental Standards Inc.

1 Analytical data on chemistry parameters produced by subcontract laboratories will be reviewed by a qualified data validator assigned by Malcolm Pirnie

Commercial Subcontractor Laboratory Data

Data generated by a commercial subcontracted laboratory will be validated by Environmental Standards Inc. Parameters will be validated in accordance with the QC requirements of the QAPP, laboratory SOPs, US EPA's National Functional Guidelines, and applicable US EPA Region 3 data validation guidance documents such as:

- US EPA Region III Modifications to the National Functional Guidelines for Organic Data Review, September 1994
- US EPA Region III Interim Guidelines for the Validation of Data Generated Using Method 1668 PCB Congener Data, April 2004

- US EPA Region III Dioxin/Furan Data Validation Guidance, Draft March, 1999
- US Region III User's Guide for Acquiring Analytical Services, July 2007

The validator will conduct a 100% validation for each analytical parameter. This means that the validator will review the raw data and logbook sheets and will recalculate at least 10 percent of the sample and QC sample results. If this validation indicates that the laboratory is producing acceptable data, than the validation may be based on the information provided by the laboratory on their QC forms.

Once data validation is completed, a data validation report will be generated. The report will contain information regarding the parameters that are qualified, the reason for the qualification, and the direction of the bias (only for parameters qualified as estimated), when possible. Based upon the quality assurance review of the analytical data, specific codes (data qualifiers or "flags") will be placed next to results to provide an indication of the quantitative and qualitative reliability of the results. The data qualifier codes in the Region III Modifications to the National Function Guidelines are proposed for this project. Qualifiers assigned by laboratories will be defined by each laboratory in their data package and will be superseded by the data validator's qualifiers.

Field Data Evaluation

Procedures to evaluate field data for this program include reviewing the data entered into the log books to identify any errors that have been made. The field data documented includes data generated during measurement of field parameters, observations, results of any quality control sample analyses, and field instrument calibrations. This task will be the responsibility of the Project QC Officer or designee.

QAPP Worksheet #37
(UFP-QAPP Manual Section 5.2.3)

This worksheet describes the procedures/methods/activities that will be used to determine whether data are of the right type, quality, and quantity to support environmental decision-making for the project.

Usability Assessment

Summarize the usability assessment process and all procedures, including interim steps and any statistics, equations, and computer algorithms that will be used:
The Environmental Standards data validator will validate chemical data in accordance with the protocols outlined on Worksheet 35. Data validation alone does not ensure usability of the data. Other factors will be considered, including comparison of actual reporting limits achieved by the lab on the samples collected to the project action levels and data needs. For data being assessed for use in the calculation of BSAFs, PCB congener results must be resolved chromatographically from other, potentially interfering congeners. In addition, a validated detection is required for tissue and sediment from the same site. These values should be above the EML and (with the exception of sediments and tissues from the two reference locations) should be at least 10 times the levels in the associated blank, equipment blank, and unexposed tissue. If insufficient data are available under these constraints to calculate at least 10 BSAFs, spanning the predominant levels of chlorination found in the tissues, co-eluting congener sets may be considered as supporting data.
Describe the evaluative procedures used to assess overall measurement error associated with the project:
As part of the data validation process, the validator identifies any qualifications, the bias (if known) of the data, applies qualifiers and comments on the usability of the data. Once the validation package is received from the validator, it is reviewed by the Project Quality Officer or a designee. Any QA/QC problems with the validation will be discussed with the validator and laboratories. Data will be used to assess directional changes in bioaccumulation from year to year.

Identify the personnel responsible for performing the usability assessment:

The usability of the data is the responsibility of the project team. The Malcolm Pirnie PM and Deputy PM will reconvene the project team after all data have been validated and reviewed. The data users performing the trend analyses (if any) will participate in a usability assessment to determine if the data is sufficient to meet the data needs and the project quality objectives and will recommend if additional data are required. A data assessment report will be issued by the Malcolm Pirnie PM or its designee documenting the results of the usability assessment review performed by the project team. The report will be submitted to the US EPA for its approval and regulatory review.

REFERENCES:

1. US EPA, 1999. Region III Dioxin/Furan Data Validation Guidance, Draft March, 1999.

2. US EPA, 2004. Region III Interim Guidelines for the Validation of Data Generated Using Method 1668 PCB Congener Data, April 2004.

3 US EPA, 2004. Region III Modifications to the National Functional Guidelines for Organic Data Review, September 1994.

4. US EPA, 2005. Intergovernmental Data Quality Task Force, Uniform Federal Policy For Quality Assurance Project Plans, Part 1: UFP-QAPP Manual, EPA-505-B-04-900A, Final Version 1, March 2005

5. US EPA, 2005. Intergovernmental Data Quality Task Force, Uniform Federal Policy For Quality Assurance Project Plans, Part 2A: UFP-QAPP Workbook, EPA-505-B-04-900C, Final Version 1, March 2005.

6. US EPA, 2005. Intergovernmental Data Quality Task Force, Uniform Federal Policy For Quality Assurance Project Plans, Part 2B: Quality Assurance/Quality Control Compendium: Minimum QA/QC Activities, EPA-505-B-04-900B, Final Version 1, March 2005.

7. US EPA, 2007. Region III User's Guide for Acquiring Analytical Services, Revision 6, July 22, 2007.

8. Ogden Environmental and Energy Services Co., Inc. and Hart Crowser, Inc., 2000. Pre-Design Investigation Report, Metal Bank NPL Site, Philadelphia, PA. January 21, 2000.

Figure 1

Organizational Chart

Figure #1

Project Organization Chart

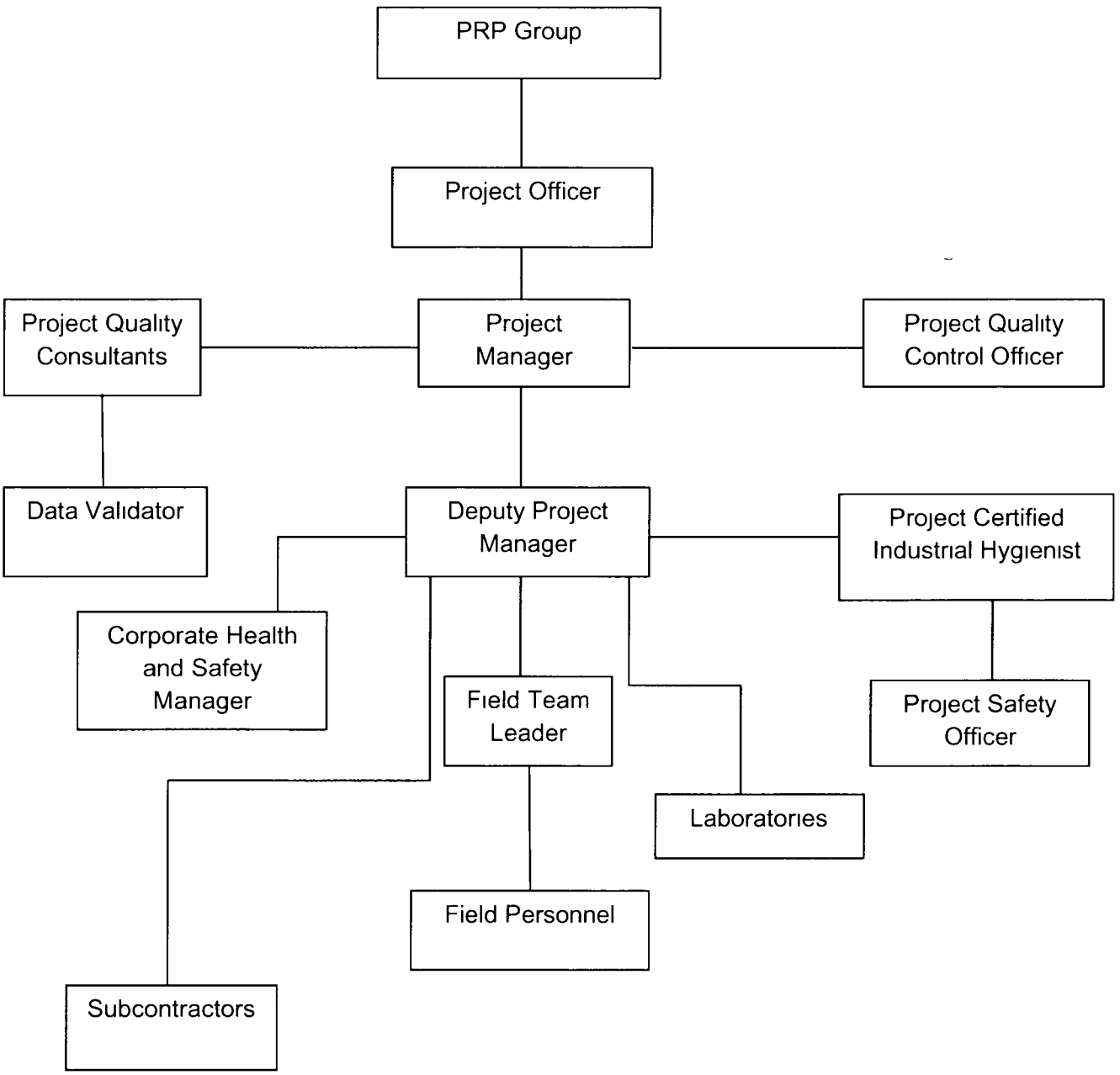

Attachment 1

Long Term Monitoring – Field Sampling Plan, Malcolm Pirnie, Inc.

Cottman Avenue PRP Group

METAL BANK SUPERFUND SITE
PHILADELPHIA, PA

LONG TERM MONITORING
FINAL FIELD SAMPLING PLAN

August 2010

Report Prepared By

Malcolm Pirnie, Inc.

824 Market Street
Suite 820
Wilmington, DE 19801

MALCOLM PIRNIE

Contents

1. Project Description **1-1**

1 1. Introduction 1-1
1 2. Project Background 1-1

2. Data Collection Planning Process **2-1**

3. Field Equipment and Procedures **3-1**

3.1 Groundwater Monitoring 3-1
3.2 Upland Cap Monitoring Activities 3-2
3 3 Mudflat Backfill and Marine Mattress Monitoring 3-3
3 4. Sediment Accumulation Monitoring 3-3
3 5. In-situ Bioaccumulation Testing, Sediment Chemical Analyses, and Benthic Community Surveys 3-4
3 6 Sheetpile Wall Monitoring 3-5

4. Sample Identification **4-1**

5. Sample Custody **5-1**

6. Field Quality Control Samples **6-1**

6 1 Field Duplicates 6-1
6 1 1 Equipment Rinsate Blanks 6-1
6 1.2 Field Blank 6-1
6 1.3 Split Samples 6-1

7. Decontamination **7-1**

8. Waste Handling **8-1**

9. Data Validation and Evaluation **9-1**

9.1 Data Validation. 9-1
9 2 Data Evaluation 9-1
9 2 1 Groundwater 9-1
9.2 2 Sediment Thickness 9-2
9.2 3. Upland and Sub-aqueous Caps 9-2
9 2 4 In-situ Bioaccumulation Tests, Surface Sediment PCB Concentration, and Benthic Community Surveys. 9-2
9 2.5 Sheetpile Wall Tiltmeter Data 9-3

10. Glossary of Abbreviations **10-1**

Attachment 1 – Data Quality Objectives

Standard Operating Procedures

A. SOP No 01, Procedures for Well Installation and Groundwater Sampling

B. SOP No 02, Procedure for Soil Cap, LNAPL Trench, and Monitoring Well Network Condition Surveys

C SOP No. 03, Procedure for Sediment Collection Using Hand Coring Devices

D SOP No. 04, Procedure for Collecting Surface Sediments Using an Ekman or Ponar Dredge

E SOP No 05, Procedure for In-situ Sediment Bioaccumulation Tests

F. SOP No 06, Procedure for Benthic Surveys

1. Project Description

1.1. Introduction

This Field Sampling Plan (FSP) describes in detail the field procedures for the collection, analysis, and evaluation of Long Term Monitoring (LTM) samples for the Metal Bank Superfund Site located in Philadelphia, PA. The purpose of the FSP is to ensure that samples are properly collected, handled, and transported to the laboratory, and that sampling and handling procedures are fully documented.

Compliance with the FSP will result in the collection of representative samples, minimize the potential for cross-contamination, and ensure both proper preservation of the samples and laboratory analysis of appropriate constituents.

Each person conducting LTM activities will be required to read this document and to fully understand the procedures that he or she are to follow in the field before beginning work at the Metal Bank Site. In addition, each field team member will be required to read, understand, and sign the Site-specific Health and Safety Plan (SSHP) before initiating field activities.

1.2. Project Background

Information on the history and regulatory status of the Metal Bank Site is provided in the Long Term Monitoring Work Plan (provided under separate cover) and in Attachment 1 to this FSP.

2. Data Collection Planning Process

This FSP presents the technical approach for conducting LTM data collection to support post-remediation decisions and activities for the Metal Bank Superfund Site. This multi-step process used to collect high quality data for the LTM program is addressed in Attachment 1 to this document.

In brief, the goals of the LTM program are to:

- Determine the effectiveness of the soil removal, upland cap, and light non-aqueous phase liquid (LNAPL) interceptor trench by monitoring concentrations of polychlorinated biphenyls (PCBs), dioxins, and semivolatile organic compounds (SVOCs) in groundwater.
- Maintain the integrity and function of the upland soil cap and LNAPL trench, including maintenance of vegetative cover and control of non-native, invasive plants.
- Maintain the integrity and function of the sheetpile wall, mudflat backfill and marine mattresses in the Delaware River.
- Determine the thickness of accumulated sediment (if encountered) above the mudflat backfill and marine mattresses to evaluate the feasibility of in-situ bioaccumulation tests at these locations in the Delaware River.
- Evaluate the bioavailability of residual contamination by determining biota-sediment accumulation factors (BSAFs) for the mudflat and background locations in the Delaware River via in-situ bioaccumulation tests using *Lumbriculus variegatus* and benthic community surveys.
- Measure PCB concentrations in surface sediment samples co-located with the bioaccumulation testing locations.
- Conduct benthic invertebrate community surveys on-site and at background locations to provide supplementary data for evaluation of remedy effectiveness.

3. Field Equipment and Procedures

The following sections describe the methods and procedures for field activities to be performed in support of the Metal Bank LTM program. A summary of LTM tasks and durations is also provided in Table 4-1 of the LTM Work Plan.

3.1. Groundwater Monitoring

Groundwater samples will be collected from 6 on-site monitoring wells for laboratory analysis. Table 4-2 in the LTM Work Plan summarizes the required analytical parameters and monitoring frequency. Groundwater monitoring wells will be sampled as described in Standard Operating Procedure (SOP) No. 01, Procedures for Well Installation and Groundwater Sampling. Monitoring wells will be sampled using USEPA low-flow purging and sampling methodology. Prior to well purging, an electronic interface probe will be used to measure the depth to water (and the depth to free product/product thickness, if encountered). If free product is encountered and the electronic interface probe is inconclusive in determining product thickness, a dedicated, clear bailer or other suitable means will be used. A low flow submersible pump (*e.g.*, bladder type pump) fitted with dedicated tubing will be used to purge the wells. Groundwater will be pumped through a flow-through cell equipped with a multiparameter probe, which will continuously record water quality parameters of temperature, pH, specific conductance, turbidity, dissolved oxygen, and oxidation-reduction potential (ORP). Wells will be continuously purged until the field water quality parameters stabilize (three consecutive readings not varying by more than ± 10 percent). If parameter stabilization is not achieved after a minimum of three well casing volumes are removed, a sample will be collected and the deviation from protocol will be noted in the field log.

Immediately following purging, the flow-through cell and multiparameter probe will be disconnected, the depth of the submersible pump will be checked to verify that it is within the screened interval of the well, and the groundwater sample will be collected from the well through the low-flow sampling equipment. The submersible pump will be properly decontaminated prior to each use. Samples will be collected in appropriate laboratory-supplied containers, labeled, placed in re-sealable plastic bags, and stored on ice in a cooler pending delivery to the analytical laboratory. Appropriate sample volume, container, and preservation information is presented in the QAPP. After the initial 5 years of groundwater monitoring, the collected data will be plotted on concentration verses time graphs to determine if there are any discernible trends (increasing, decreasing, or remaining constant). Recommendations for subsequent groundwater monitoring will be based on the results of the statistical evaluation.

3.2. Upland Cap Monitoring Activities

The upland cap monitoring will consist of a complete walk-over of the cap (including visual inspection of the monitoring well risers, protective casings, and pads), and collection of the data and observations required in SOP No. 02, Soil Cap Surveys. The upland cap monitoring will be conducted quarterly. Monitoring will also occur within 30 days of a significant (25-year) storm event. The monitoring effort will be photodocumented and findings recorded on field inspection forms. The upland cap monitoring will continue until clean-up standards are met or USEPA otherwise determines that monitoring is no longer required.

Observations of damage to the cap and ancillary structures (including access roads and fences) will trigger maintenance to correct damage including cracks/fissures, subsidence, inadequate grades or cap thickness, and inadequate or undesirable vegetation.

During the first 2–3 years, the cap will be mowed annually in late spring to suppress growth of weeds with the mower blade set at a height of 8-10 inches above the ground. Once vegetation is established (*e.g.,* 3 - 4 years), vegetation will be cut in spring every 3–4 years with the mower blade set at a height of 8 – 10 inches above the ground.

During surveys conducted in the late spring and late summer, activities will also include inspections of the cap for survival of cap vegetative cover and the potential presence of non-native, invasive vegetation. The list of invasive species to be monitored are those found in the publication *Plant Invaders of Midatlantic Natural Areas* (National Parks Service and US Fish and Wildlife Service, 2002). The document may be accessed online at http://www.nps.gov/plants/alien/pubs/midatlantic/. Maintenance of the cap (replanting/reseeding, spot cutting, or herbicide application, as appropriate) will be conducted if the survival of the designed vegetative cover decreases below 80% and/or if invasive species are found on 10% or more of the cap surface. Cap monitoring activities will also include information on how the access roads are maintained, repair of damaged fences (if any), and documentation of cap subsidence and repair.

Cap monitoring efforts will also include monitoring of the LNAPL trench, designed to capture potential free product contamination in the unconfined aquifer. Visual evidence of sheen or free product will be noted, as well as any odors. A decontaminated, electronic interface probe will be lowered into the trench sumps/manholes to detect the thickness of potential free product, as required by SOP No. 02.

Detections of free product will prompt deployment of absorbent booms in the LNAPL trench. If free product persists and is not well-controlled by the use of absorbent booms, other mitigative measures will be proposed and implemented, and may include the installation of an active product recovery system.

Groundwater elevations in the LNAPL trench sumps and monitoring wells will be checked after a significant rainfall amount of 4-inches over a period of 24 hours or after a 100 year flood event. If groundwater elevation exceeds the elevation of the soil cap (11 feet MSL), soil samples will be collected and analyzed for PCBs by Arochlor, to check for the potential migration of LNAPL upward into the soil cap.

The epoxy coating of Building 7 will be inspected once a year, during either the Spring or Fall season until clean-up standards are met or USEPA otherwise determines that monitoring is no longer required. At the end of the initial 5 years of the LTM period, the operation and maintenance program will be re-evaluated. Any exposed concrete in an area exceeding 10 square centimeters will be recoated with epoxy. The aerial extent of exposed concrete (100 cm2) is based on standard wipe test methods for spills of PCBs on solid surfaces and clean-up standards that are based on concentration per area as identified in the Toxic Substances Control Act (TSCA) 40 CFR 761.125.

3.3. Mudflat Backfill and Marine Mattress Monitoring

Drivers and a surveyor will be retained to conduct annual elevation surveys in conjunction with divers and bathymetric surveys of subtidal portions of the mudflat backfill and marine mattress areas. Intertidal mudflat backfill areas will be monitored using an annual elevation survey and visual monitoring for condition. Visual inspection of the marine mattresses and backfilled areas will occur annually for a period of five years. After five years, a recommendation will be made to reduce or modify inspections; however, the surveys are currently planned to continue until cleanup standards are met or USEPA otherwise determines that monitoring is no longer required. Following a 25-year storm event, a visual evaluation of the mudflat backfill and marine mattress areas that can be observed at low tide will be performed within 30 days of the storm event. A supplemental survey will be performed within 30 days of an anthropogenic event judged capable of damaging the backfill and/or marine mattress area (*e.g.*, a vessel running aground in these areas). The surveys will be conducted according to SOPs provided by the selected geophysical subcontractor.

3.4. Sediment Accumulation Monitoring

During the LTM period, the mudflat backfill and marine mattress locations will be monitored for accumulation of sediment. The Delaware River is tidally influenced, creating a dynamic aquatic environment with erosion and deposition of superficial sediments on a daily basis. It is not yet known if the mudflat backfill area and marine mattress areas are net depositional or erosional zones. During annual monitoring of these areas, sediment thickness will be visually evaluated during low tide or via sediment sampling in accordance with SOP No. 03, Procedure for Sediment Collection Using Hand Coring Devices or SOP No. 04, Procedure for Collecting Surface Sediments Using an

Ekman or Ponar Dredge, as appropriate. The sediment sampling will be conducted to augment and 'ground-truth' the geophysical data (refer to Section 3.3) and to determine whether 12 inches or greater of accumulated sediment is present in the backfill and marine mattress locations (to accommodate placement of bioaccumulation test cells).

3.5. In-situ Bioaccumulation Testing, Sediment Chemical Analyses, and Benthic Community Surveys

Two rounds of annual in-situ bioaccumulation tests using *Lumbriculus variegatus* will be conducted at four locations in the mudflat and two background locations, according to the procedures in SOP No. 05. Additional possible testing locations will be considered after the first year of testing, based on sediment accumulation monitoring described in Section 3.4 above. A laboratory control test will also be conducted by the selected subcontract laboratory at their off-site location using 'clean' sediment. Bioaccumulation tests will be 28 days in duration.

Prior to the test deployment, a portion of the test organism population will be analyzed for PCB Congeners to establish baseline concentrations in the test organisms. Test organisms will be subsequently acclimated to site water at an on-site field laboratory. While the organisms are acclimating, test chambers (consisting of 12 inch by 4 inch outer diameter plastic tubes) will be loaded with surficial sediment collected from the top six inches of the mudflat and background locations and installed horizontally within a wire basket at each test location. The test chambers will be allowed to come to equilibrium for a three day period, and then the organisms will be added to each test chamber through inlet ports (approximately 20 grams of organism tissue mass per chamber).

Six replicate test chambers will be deployed at each of the four mudflat and two background locations. Basic site water quality characteristics will be measured at both the initiation and termination of the test. Sediment samples from each location will be analyzed for basic characteristics, such as total organic carbon (TOC), as well as PCB Congeners. Dissolved oxygen concentrations within test chambers would also be determined at both test initiation and termination.

Immediately after test termination, the organisms will be carefully removed from the test chambers, rinsed of debris and placed in clean water to gut purge. An acceptable test would have at least 80% survival in control organisms. After purging, organisms from all replicates will be grouped into one composite sample by sampling location, weighed, placed into ziplock bags, frozen and sent to an accredited lab for analysis.

The data from the bioaccumulation tests and the sediment sample chemical analyses will be evaluated as described in Section 9.2.4 of this document. The need for additional bioaccumulation testing will be evaluated following the review of data from the first two annual events.

Benthic community surveys will be conducted on-site and at background locations during 2011 and 2012. The collected data will be considered during the 5-year review event as supplemental data. Benthic samples will be collected at four mudflat and two reference locations using a grab sampler (*e.g.*, Ponar), D-frame net or other appropriate device, according to procedures in SOP No. 06. Benthic macroinvertebrates in each sample will be identified to the lowest practical level. The benthic macroinvertebrate community at the four mudflat locations will be compared to that at the two reference locations in terms of parameters such as community diversity, abundance and the number of pollutant tolerant species present.

3.6. Sheetpile Wall Monitoring

Monitoring of the sheetpile retaining wall for rotation will be undertaken for a period of at least two years after remedial construction is completed. Tiltmeters will be installed at three locations on the upland side of the wall (one tiltmeter in each zone). At the time of installation, the tilt sensors will be adjusted to the null position. Tiltmeters will be monitored monthly for the first six months followed by quarterly monitoring (four times per year) for the balance of two years. If the rotation of the wall is determined to be less than two degrees after two years, no further monitoring will be conducted. If the rotation of the wall is determined to be greater than two degrees (after any period of time following commencement of monitoring), then the monitoring will continue and the design engineer will be contacted for corrective measures that may be necessary to halt the rotation. Monitoring will continue until the rotation has been determined to have ceased for a period of three consecutive quarters. Monitoring of the sheetpile wall will also include visual inspection and repairs of epoxy coating until clean-up standards are met or USEPA otherwise determines that monitoring is no longer required. Data will be appropriately recorded in the site log book.

4. Sample Identification

The following information will be written in the log book and on the sample label when samples are collected for laboratory analysis:

- project identification (name and number).
- sample identification number.
- preservatives added.
- date and time of collection.
- requested analytical methods.
- sampler's name.

Each sample collected will be identified with a sample label in addition to an entry on a Chain of Custody (CoC) form. Each sample will be identified with a unique sample number that designates the location and sample type. Field quality control (QC) samples will be identified by use of a similar system of identification. Notes will be entered into the field logbook to track this sample as a field duplicate.

5. Sample Custody

In the field, each sample container will be marked with the sample identification number, sampling location, date, time of sample collection and the sampler's initials. Sample containers for chemical analysis will be placed in ice-filled sample coolers immediately following collection, and kept at four ± two degrees Celsius prior to, and during, shipment. Sample containers will be packaged in such a way to avoid breakage during transportation. Samples will be transported to the project laboratory daily during the monitoring events and sample possession will be maintained under proper CoC procedures.

For each sample to be submitted to the project laboratory for analysis, an entry will be recorded on a CoC form supplied by the laboratory. One CoC form will be completed for each cooler for each day of sample. The information recorded on the CoC form includes the sampling date and time, sample identification number, requested analyses and methods, and the sampler's name.

The following information concerning the sample will be documented on the CoC form:

- project name and designated project number.
- unique sample identification.
- date and time of sample collection.
- sample matrix.
- analytical parameters requested.
- number of containers per sample.
- sampler's name.

Upon receipt of the sample cooler, the laboratory will verify custody and condition of the samples. Non-conformances in sample receipt (*e.g.*, broken sample containers, samples received outside of temperature range) will be documented on the sample receipt form and communicated to the project team immediately.

6. Field Quality Control Samples

The following paragraphs describe the types of quality control samples that will be collected at the site. More information is available in the QAPP.

6.1. Field Duplicates

Field duplicates are samples that are collected at the same time, from the same source, and at the same depth or sample location as the associated field sample. Field duplicates are submitted to the project laboratory as separate samples. The purpose of collecting field duplicates is to assess the consistency of the overall sampling effort, including collection, shipping, and analysis; the purpose of submitting them to the laboratory is to assess the consistency or precision of the laboratory's analytical system. One field duplicate will be collected during each groundwater monitoring event and each sediment sampling event.

6.1.1. Equipment Rinsate Blanks

If non-disposable equipment (*e.g.*, stainless steel) is used, equipment rinsate blanks will be prepared in the field by collecting the final rinse water of the decontamination process. Equipment rinsate blanks are analyzed for the same parameters as the field samples. The analytical results of the equipment rinsate blanks will be reviewed for presence of target analytes as an indication of potential contamination from field procedures or insufficient decontamination. One equipment rinsate blank will be collected during each groundwater monitoring or sediment/biota sampling event, if non-dedicated equipment is used.

6.1.2. Field Blank

A field blank is a sample of analyte-free water poured into a clean sample container in the field, preserved and shipped to the laboratory with field samples. The purpose of the field blank is to assess contamination from field conditions during sampling. One field blank sample will be submitted for each groundwater monitoring event.

6.1.3. Split Samples

Regulatory agencies may require the collection of split samples of both sediment and groundwater for analysis. The tentative sampling schedule will be provided to the appropriate agencies prior to the commencement of sampling in order to allow agencies time to provide field personnel for collection of split samples. The respective agencies, in turn, will advise on the desired locations for split sample collection.

7. Decontamination

Decontamination of field equipment will be instrument-specific. Dedicated, disposable sampling equipment (*i.e.*, disposable buckets) will not require decontamination.

When non-dedicated groundwater or sediment sampling devices are used (*i.e.*, bladder pump, water level indicator, etc), they will be decontaminated prior to each use and at the end of each day. The devices will be decontaminated by the following procedure:

- Rinse with potable water.
- Wash with a non-phosphate detergent (Liquinox or equivalent) and water solution.
- Rinse with potable water.
- Rinse with Hexane.
- Rinse with analyte-free water.

For the LNAPL trench monitoring, the interface probe and coaxial cable for the interface probe will be wiped clean using a dry disposable towel after each use.

8. Waste Handling

Waste generated during the field activities will be handled, and disposed of in accordance with applicable Federal, state, and local regulations. Investigative-derived waste (IDW) that is generated during monitoring events will consist of purge water, decontamination water, general trash, disposable sampling equipment, and used personal protective equipment (PPE). General trash and disposable sampling equipment will be disposed of as non-hazardous materials. All IDW generated at the Site, including IDW generated by the EPA and EPA oversight will be placed in labeled 55-gallon closed top drums and disposed of properly.

9. Data Validation and Evaluation

The procedures described above will be used in the field to ensure that observations are thorough and high quality samples are collected and transported to the laboratory for analysis. This section describes plans for quality assurance/quality control of the analysis performed by the laboratory, as well as descriptions of methods for evaluating the data and cap observations in line with the DQOs. Where appropriate, the results will be fed into decision trees in order to determine the consequences and courses of action for long term monitoring results. Refer to Section 5.0 of the Work Plan for these decision trees.

9.1. Data Validation

Data validation is described under separate cover in the QAPP.

9.2. Data Evaluation

For groundwater and sediment chemical samples, statistical analysis will be used for data evaluation. For the upland cap, backfill area, and sub-aqueous caps, no numerical data will be generated. Instead, professional judgment and direct observation will be used to evaluate the integrity of the backfill and caps.

9.2.1. Groundwater

The collected groundwater data will be statistically evaluated at the conclusion of the fifth year of sampling and analysis to determine whether potential residual groundwater contaminants have decreased, stabilized, or increased. Since there are currently no action levels for residual site contaminants in groundwater, the proposed five year monitoring program should be adequate in determining whether residual concentrations are increasing, decreasing and/or remaining stable. Data can be shared with interested parties after each sampling event so that consensus decisions can be made as necessary.

To verify the results of the this evaluation of the groundwater data, data from each monitoring well for each chemical compound of concern will be graphically plotted over time in order to visually demonstrate residual contaminant trends. Based on the results of the data evaluation collected over the initial five year monitoring period, one or more of the following options may be recommended:

1. Residual contaminant concentrations have demonstrated a continual increase, in which case the Group would develop and submit a plan to the USEPA for recommending additional groundwater investigation and/or mitigation efforts.

2. Residual contaminant concentrations have demonstrated stabilization, in which case the Group will submit a revised groundwater monitoring plan to the USEPA which may include decreased sampling frequency and/or elimination of analysis for certain chemical compounds.

3. Residual contaminant concentrations have demonstrated a continual decrease, in which case the Group would recommend one final confirmatory round of groundwater sampling and analysis followed by a cessation of further sampling.

The thickness of LNAPL will be gauged in the monitoring wells in addition to the LNAPL collection trench sumps. This LNAPL thickness data will be recorded and plotted in a table over time (if applicable).

9.2.2. Sediment Thickness

The measurements of sediment thickness collected from the backfill and marine mattress areas will be compared to a criterion of 12 inches. If sediments accumulate to a thickness of 12 inches or greater, a recommendation regarding potential expansion of the in-situ bioaccumulation testing to these areas will be submitted to USEPA.

9.2.3. Upland and Sub-aqueous Caps

Experienced engineers will evaluate the upland cap, backfill area, and marine mattress areas for indications of cap damage based on geophysical surveys, elevation surveys, and visual observations. Professional judgment will be used to determine if cap repairs or enhancements are necessary.

9.2.4. In-situ Bioaccumulation Tests, Surface Sediment PCB Concentration, and Benthic Community Surveys

The sediment sample results from the bioaccumulation testing in the on-site mudflats will be compared to the 1 ppm remediation goal for PCBs in sediment. If the sediment sample results from the on-site mudflats exceed the remediation goal, additional sediment sampling for PCB analysis will be conducted to delineate the sediment concentrations and allow formulation of a response plan.

The biological tissue results and calculated BSAFs will be compared to prior site data and the results from the reference locations. If the results obtained during the two rounds of annual testing are lower than previous site results and comparable to the reference locations, the need for additional bioaccumulation testing will be evaluated. If the results are equal to or greater than prior results and/or greater than the reference site results, bioaccumulation monitoring will continue on an annual basis until results are lower than previous site results for at least two rounds of annual testing.

The benthic macroinvertebrate community will be conducted annually for a period of two years, and will occur in 2011 and 2012. Results obtained at four mudflat locations will be compared to those at two reference locations in terms of parameters such as community

diversity, abundance and the number of pollutant tolerant species present. The results of the benthic community surveys will be used as qualitative indicators of the effectiveness of the remedy.

9.2.5. Sheetpile Wall Tiltmeter Data

If after two years of data gathering from tiltmeters located adjacent to the retaining wall, less than 2 degrees of rotation is measured, a recommendation will be made to cease monitoring. If the rotation of the wall is determined to be greater than 2 degrees, the monitoring will continue on a quarterly basis until rotation has ceased for a period of three consecutive quarters.

10. Glossary of Abbreviations

BSAF	Biota-Sediment Accumulation Factor
CoC	Chain of Custody
DQO	Data Quality Objective
FSP	Field Sampling Plan
IDW	Investigation-derived Waste
LNAPL	Light Non-Aqueous Phase Liquid
LTM	Long Term Monitoring
ORP	Oxidation Reduction Potential
PCBs	Polychlorinated Biphenyls
PPE	Personal Protective Equipment
QAPP	Quality Assurance Project Plan
QC	Quality Control
SOP	Standard Operating Procedure
SSHP	Site Safety and Health Plan
SVOC	Semivolatile Organic Compound
TOC	Total Organic Carbon
USEPA	United States Environmental Protection Agency

ATTACHMENT 1
PLANNING PROCESS
FOR LONG TERM MONITORING DATA COLLECTION
METAL BANK SUPERFUND SITE

The Metal Bank Long Term Monitoring (LTM) program was designed to collect data of the right type, quality, and quantity to evaluate the effectiveness of the remedial action and its ability to achieve the remedial objectives in the Consent Decree. The following steps were used to design the Metal Bank LTM program:

1. Describe the project.
2. Identify the goals of the LTM program.
3. Identify information inputs.
4. Define the boundaries of the LTM program.
5. Develop the analytic approach.
6. Specify performance or acceptance criteria.
7. Develop the plan for obtaining LTM data.

In the sections that follow, this document presents the application of the process to develop a plan for post-remediation monitoring at the Metal Bank Superfund Site in Philadelphia, PA. The monitoring effort is to commence following remediation of the upland and Delaware River portions of the site.

1.0 Describe the Project

The first step of the process consists of the following activities:

- Describe the project that has initiated the sampling effort.
- Establish the planning team.
- Describe the Conceptual Site Model (CSM).
- Identify resources needed, and organization/management issues requiring resolution, as appropriate.

1.1 Project Description

A monitoring program needs to be developed to determine the long-term effectiveness of the remedy implemented at the Metal Bank Superfund Site. The monitoring program must also include decision components to trigger maintenance and repair of the elements of the remedy, as needed, and to initiate a response to potential detections of free product or detections of site contaminants at concentrations requiring action.

1.2 Planning Team

The primary decision-maker for the LTM Plan planning team is the U.S. Environmental Protection Agency (USEPA) Region 3 Site Manager. The LTM program will be conducted by the Cottman Avenue PRP Group in accordance with the Revised Remedial Plan dated 29 June 2004 and other guidance documents identified in the LTM Work Plan.

The LTM planning documents were prepared by Malcolm Pirnie, Inc. on behalf of the Cottman Avenue PRP Group, which is the Supervising Contractor implementing remedial construction at the site. Other project stakeholders providing review and comment on the LTM planning documents include the USEPA Biological Technical Assistance Group (BTAG), U.S. Army Corps of Engineers (USACE), the Pennsylvania Department of Environmental Protection (PADEP), and the Delaware River Basin Commission (DRBC).

1.3 Site History and Conceptual Site Model

1.3.1 Metal Bank Site Ownership Summary and History

The history of the ownership and operation of the Metal Bank site, which was considered during the design of the LTM data gathering program, is summarized in the Utility Group Consent Decree filed March 13, 2006.

1.3.2 Metal Bank Conceptual Site Model

The potential pathways for contaminant transport at the Metal Bank Site, as they pertain to the elements of the LTM program, are discussed in Section 3.1 of the LTM Work Plan.

1.4 Resources, Constraints, and Deadlines

The implementation of the LTM program will be funded by the Cottman Avenue PRP Group. A project schedule for the LTM program will be provided in the final planning documents; it is expected that long-term monitoring will begin following completion of remedial construction in the spring of 2010.

2.0 Identify the Goals of the LTM Program

For the second step of the process, principal LTM questions were formulated based on the LTM program data needs. The questions represent individual data needs that can be used collectively to assess the effectiveness of the remedy and to trigger required long-term maintenance actions. Each question is accompanied by alternative actions that may be taken in response to the resolution of the question and a decision statement that will define decision performance criteria in subsequent steps of the planning process.

Principal LTM Questions	Alternative Actions and Decision Statements
1. What are the concentrations of PCB Congeners, PCB Aroclors, Semivolatile Organic Compounds (SVOCs), and Dioxins in the site groundwater and how will the concentrations vary with time during the LTM period?	**Alternative Actions**: • Conduct regular groundwater sampling and analysis according to the Field Sampling Plan (FSP). • Re-evaluate groundwater monitoring frequency after a 5-year LTM interval based on trending analysis. • Continue groundwater monitoring for a subsequent 5-year interval and potentially conduct additional investigations to address contaminant trends. **Decision Statement**: Determine whether groundwater contaminant concentrations, as measured via samples collected from the on-site monitoring well network, are decreasing, stable, or increasing during a 5-year monitoring period.
2. Is non-aqueous product present in the light, non-aqueous phase liquid (LNAPL) monitoring trench and if so, what actions are required to recover the product?	**Alternative Actions**: • Conduct regular monitoring of LNAPL trench according to FSP. • Reduce frequency of monitoring of LNAPL trench after initial 5-year LTM interval. • Continue LNAPL trench monitoring for a subsequent 5-year interval and potentially conduct product recovery in response to observations. **Decision Statements**: • Determine whether sheens or free product are present in the LNAPL trench. • Determine when to deploy absorbent booms or to initiate other modes of active product

Principal LTM Questions	Alternative Actions and Decision Statements
	recovery.
3a. Are the upland cap, monitoring well network, and LNAPL trench in adequate condition to maintain their design function? 3b. Has the upland cap been exposed to the upward migration of LNAPL as a result of flooding? 3c. Has the epoxy coating on the floor of Building 7 cracked such that more than 100 square centimeters of concrete is exposed?	**Alternative Actions**: • Conduct regular and storm event-related evaluation of the condition and function of the upland cap, monitoring well network, and LNAPL trench according to FSP. • Repair damage to and actively maintain, as necessary, the upland cap, monitoring well network, and LNAPL trench. • Groundwater elevations in the LNAPL trench sumps and monitoring wells will be checked after a significant rainfall amount of 4-inches over a period of 24 hours or after a 100 year flood event. • Visually inspect the epoxy coating on the floor slab of Building 7. **Decision Statements**: • Determine when maintenance and/or repair of the remedy elements are necessary. • If groundwater elevation exceeds the elevation of the soil cap (11 feet MSL), soil samples will be collected and analyzed for PCBs by Arochlor. • Any exposed concrete in an area exceeding 100 square centimeters will be recoated with epoxy.

Principal LTM Questions	Alternative Actions and Decision Statements
4a. What are the biota-sediment accumulation factor (BSAF) and PCB bioaccumulation potential for benthic organisms in the mudflat area and at reference locations? 4b. What is the condition of the benthic invertebrate community at the site and at background locations in 2011 and 2012 of the LTM?	**Alternative Actions**: • Conduct annual bioaccumulation tests in mudflat and reference site locations, along with surface sediment sampling for chemical analysis (including PCB analysis) to support BSAF development. • Cease bioaccumulation testing and sediment chemical analysis when BSAF is lower for two consecutive events. Implement additional investigations and/or response actions. **Decision Statements**: • Determine when BSAFs and benthic tissue concentrations measured on-site during the LTM period are lower comparable to those measured at reference locations for two consecutive events. • Determine whether sediment PCB concentrations exceed 1 part per million (ppm). Determine whether BSAF and tissue concentrations at these locations are higher than other on-site locations. • Identify the condition of the benthic community on-site and at the background locations for comparison. (This is an informational input only for the 5-year review, and does not have an associated decision.)
5a. Are the mudflat backfill and marine mattress areas in adequate physical condition to maintain their design function? 5b. Are sediments accumulating on	**Alternative Actions**: • Conduct regular and storm event-related visual evaluation of condition and function of mudflat backfill areas and elevation

Principal LTM Questions	Alternative Actions and Decision Statements
the mudflat backfill and marine mattress areas such that additional bioaccumulation sampling locations (refer to LTM Question 4) could be added? 5c. Is deflection/rotation of the sheetpile retaining wall occurring? 5d. Is the epoxy coating on the sheetpile wall damaged?	surveys according to FSP (for areas visible at low tide). • Conduct regular diver assisted elevation surveys and bathymetric surveys of subtidal backfill and marine mattress areas (for subtidal areas). • Repair damage to and actively maintain, as necessary, the mudflat backfill and marine mattress areas. • If sediments accumulate on the mudflat backfill and marine mattress areas in a sufficient amount to facilitate additional in situ bioaccumulation studies, evaluate whether additional sampling is required. • Conduct tiltmeter monitoring of the sheetpile retaining wall. • Conduct visual inspection of the epoxy coating on the sheetpile wall. **Decision Statement**: Determine the need for backfill/marine mattress maintenance and/or repairs to maintain isolation of underlying sediments and correct unacceptable erosion, settlement, or dislocation of the backfill or marine mattresses. Determine whether accumulated sediment in the backfill/marine mattress areas is adequate for sampling and analysis. If sediment accumulation is adequate, the Group will provide a recommendation to USEPA regarding further sampling, if required. Determine the need for continued monitoring of the sheetpile retaining wall, based on recorded tiltmeter data.

3.0 Identify Information Inputs

The third step in the process is to identify information that will be required to answer the LTM questions and support site management decisions. The following sections list the information inputs required to conduct the LTM program, in generally the same order as the LTM questions provided in the prior Section 2.0.

3.1 Groundwater

1. Concentrations of PCB Aroclors, PCB Congeners, Dioxins, and SVOCs in groundwater samples from on-site monitoring well network.
2. Water quality field parameters recorded during monitoring well purging and sampling (temperature, pH, specific conductance, turbidity, dissolved oxygen, and oxidation-reduction potential [ORP]).
3. Measurements of depth to potential free product and depth to groundwater via interface probe.
4. Survey data for well casings.

3.2 LNAPL Monitoring Trench

1. Visual observations of the presence/absence of sheens or non-aqueous phase liquid in monitoring trench.
2. Interface probe measurements of potential LNAPL thickness in monitoring trench.
3. Visual observations of the condition of absorbent booms (as a basis for retrieval and replacement) and recording of the duration of LNAPL collection.

3.3 Upland Remedy Structures

1. Elevation survey data for the upland soil cap.
2. Plant community assessment for the upland soil cap to determine percentage of vegetation and percentage of invasive vegetation.
3. Visual observation of the upland soil cap for erosion damage.
4. Visual observation of the monitoring well structures for damage.
5. Visual observation of the LNAPL trench structures for damage.
6. Visual observation of ancillary structures (fences, access roads, etc.) for damage.
7. Identification of the occurrence of a 25-year storm event.
8. Checking groundwater elevations in the LNAPL trench sumps and monitoring wells after a significant rainfall amount of 4-inches over a period of 24 hours or after a 100 year flood event to ensure that groundwater elevations do not exceed the elevation of the soil cap (11 feet MSL) .

9. Visually inspect the epoxy coating on the floor slab of Building 7. Any exposed concrete in an area exceeding 10 square centimeters will be recoated with epoxy.

3.4 Sediment in Mudflat Backfill and Marine Mattress Areas

1. Thickness of deposited sediments (if any) above the mudflat backfill and marine mattress areas.

3.5 In-situ Bioaccumulation Testing

1. Concentration of PCB Congeners in laboratory organism tissue prior to deployment at site.
2. Concentration of PCB Congeners in laboratory organism tissue subsequent to deployment in test chambers at on-site mudflat and reference site locations.
3. Concentrations of PCB Congeners in sediment samples from each bioaccumulation testing location.
4. Calculated BSAFs for bioaccumulation testing locations.
5. Percent survival of oligochaetes.
6. Benthic community survey data for the site and background locations.

3.6 In-river Remedy Structures

1. Visual observation and elevation survey data for intertidal mudflat backfill areas.
2. Diver assisted elevation surveys and bathymetric survey data for subtidal backfill and marine mattress areas.
3. Identification of the occurrence of a 25-year storm event and/or anthropogenic events capable of causing damage to the backfill and/or marine mattresses.
4. Tiltmeter data regarding the sheetpile retaining wall.
5. Visual inspections of epoxy coating on sheetpile wall.

3.7 Action Levels

The following action levels were identified for interpretation of the data obtained during the LTM program:

- For PCBs in sediments, an action level of 1 ppm is identified in the Revised Remedial Plan dated June 29, 2004 (page 1, sixth bullet).
- For PCBs in groundwater, no action level exists; therefore, results will be base on the data comparison with the remedial goal. Data will be plotted graphically to show temporal gradations. To evaluate the feasibility of in-situ bioaccumulation testing in the backfill and marine mattress areas, 12 inches of sediment or more need to accumulate at potential monitoring locations.
- For cap vegetation, a survival criterion of 80% was requested by the USEPA BTAG.

- For invasive vegetation on the cap, a criterion of no more than 10% was requested by BTAG.
- For monitoring of the sheetpile wall, rotation of 2 degrees or more during the first two years of the LTM period will trigger additional monitoring.
- Repair any areas where epoxy coating is damaged.

This is either bad or good science – we don't know and there are literature BASF reference values as a comparison.

- Groundwater sample results.
- LNAPL trench monitoring results.
- Upland cap, backfill, and marine mattress observations, survey data, and geophysical data.
- Benthic community survey data.

Trend evaluation and the application of professional judgment will be explored for interpretation of these data.

3.8 Appropriate Sampling and Analysis Methods

The Revised Remedial Plan dated June 29, 2004 identifies the following analytical methods to be used for the LTM program for groundwater analysis:

- Total Aroclor PCBs via EPA Method 8082(A).
- Total Congener PCBs via EPA Method 1668(A)
- Dioxins via EPA Method 1613.
- SVOCs via EPA Method 8270(D)

Analytical methods not explicitly identified in the Revised Remedial Plan will be identified in the QAPP. Sample collection techniques are identified in the FSP and the attached standard operating procedures (SOPs).

4.0 Define the Boundaries of the LTM Program

The fourth step of the process requires identification of the target population of interest and the spatial and temporal features pertinent to decision making. These characteristics include the geographical area of the Metal Bank Superfund Site, the timeframe for the data collection and decision-making, and the appropriate scale of decision-making for each medium of concern.

4.1 Target Population

The target population for the LTM program consists of:

- The set of groundwater samples that can be collected from the designated network of six monitoring wells.
- The potential non-aqueous phase liquid in the LNAPL monitoring trench.
- The vegetation and soil layers that comprise the upland cap.
- The physical structures of the monitoring wells and LNAPL monitoring trench.
- The set of sediment locations that can be selected to deploy in-situ bioaccumulation tests (and collect surface sediment for chemical analysis) on-site and at reference sites.

- The set of locations that can be selected for on-site and background location benthic community surveys.
- The physical components of the mudflat backfill and marine mattresses and the thickness of deposited sediment in these areas.
- The physical orientation of the sheetpile retaining wall, as monitored by tiltmeters installed at the site.

4.2 Spatial Boundaries

The Metal Bank Superfund Site project area is shown on Figures 4-1 and 4-2 of the WP. The extent of the LTM data collection includes the upland site on the western bank of the Delaware River, the adjacent mudflat and marine mattress areas, and background/reference sampling locations.

The components of the remedy constructed at the Metal Bank site create specific spatial boundaries for the LTM program, consisting of the extent of the on-site monitoring well network, the extent of the soil cap and sheetpile barrier, the extent of the LNAPL trench structure and the access manholes where observations can be collected, the extent of the constructed backfill and marine mattress areas in the Delaware River Sampling Media

Environmental media to be characterized for the Metal Bank LTM include groundwater, sediment, and oligochaete tissue (from bioaccumulation studies).

4.3 Temporal Boundaries

A LTM project schedule will be provided in the final LTM planning documents. Known temporal boundaries include the monitoring intervals specified (*e.g.*, for groundwater sampling) in the Revised Remedial Plan and the need for EPA to prepare a Five-Year Review after construction of the remedy that will include the agency's evaluations of the remedy's effectiveness and the reduction of risk.

4.4 Practical Constraints

Practical constraints and obstacles that may impede the sampling and data collection include, but are not limited to, the following:

- Weather conditions may prevent collection of samples as scheduled, *e.g.*, storms or flooding conditions that impact site safety.
- Geological and physical conditions encountered at the sampling locations may interfere with the collection of a desired sample. If these conditions are encountered, it may be necessary to choose alternate sampling locations or adjust the schedule.
- Daily tidal and seasonal changes will influence groundwater and sediment. Seasonal changes will impact cap vegetation and the optimal times for evaluation of growth and survival.

- Laboratory data may not meet the quality assurance criteria or reporting limit criteria. If these conditions exist, it may be necessary to re-analyze affected samples (if there is sufficient sample material remaining and holding times have not expired) or, if necessary, re-sample affected locations.

4.5 Decision Making Scale

The following decision units are proposed:

- Any location/component on the upland cap, monitoring well network, mudflat backfill area, or marine mattress that requires maintenance or repair.
- The entire LNAPL monitoring trench.
- The population of sediment locations selected for on-site deployment of in-situ bioaccumulation tests and chemical analysis and each individual location.
- The unconfined aquifer bounded by the LTM monitoring well network and individual monitoring well locations.
- The population of tiltmeter data from the retaining wall.

Decision rules cannot be developed for every decision making scale at this time, and may be addressed through the preparation and submittal of recommendations for further investigation or response actions to USEPA following evaluation of LTM data.

5.0 Develop the Analytic Approach

In the fifth step of the process, an analytic approach is developed to guide the analysis of data and the development of conclusions.

5.1 Decision Parameters

The decision parameters interest will consist of the following:

- For groundwater we will plot the data and determine whether the concentration trends for contaminants of concern are decreasing, increasing, or remaining constant.

- For sediments,

    - The thickness of sediment deposits that may accumulate in the backfill and marine mattress areas.

    - The individual concentrations of the on-site sediment samples from the in-situ bioaccumulation test locations as compared to the 1 ppm PCBs action level.

- The individual calculated BSAFs from the bioaccumulation tests and background location results.

- For LNAPL in the monitoring trench, the visually observed or measurable (via interface probe) presence or absence of LNAPL and sheens.

- For cap vegetation, the estimates of percent cover and percent invasive vegetation as measured at ten random locations on the upland cap and compared to the requirements that vegetative cover be maintained at 80% or greater with no more than 10% invasive species.

5.2 Decision Rules

The following decision rules are proposed for the LTM program:

1. At the conclusion of a 5-year monitoring period, we will

2. Plot groundwater concentration data vs. time. If groundwater contaminant concentrations are decreasing during the 5-year period, conduct a final confirmatory sampling round, and if a decreasing trend is confirmed, submit a proposal to cease groundwater monitoring. If concentrations are stable or increasing, or a decreasing trend cannot be confirmed, continue monitoring and recommend appropriate response actions.

3. If vegetative cover on the upland cap decreases below 80%, reseed/replant cap as appropriate.

4. If the presence of non-native, invasive vegetation on upland cap reaches or exceeds 10%, implement control program.

5. If erosion damage to the upland cap or damage to the monitoring wells or LNAPL trench is observed, repair as necessary.

6. If annual elevation surveys of the upland cap indicate changes in cap grades that would lead to ponding of stormwater or other loss of the cap's ability to control precipitation and run-off, repair the cap as necessary.

7. Compare the measured thickness of recently accumulated sediments in the backfill and marine mattress areas to a criterion of 12 inches during the LTM period. If the accumulated sediments are equal to or greater than 12 inches in depth, provide a recommendation to the USEPA regarding performance of in situ bioaccumulation tests in these areas

8. If calculated BSAF and oligochaete tissue results from LTM period do not trend downward on an annual basis, we will determine if the BASF are below previous site results and comparable to reference locations as recommended by BTAG after which a decision will be made to discontinue bioaccumulation testing.

9. If detected sediment concentrations from bioaccumulation testing locations exceed 1 ppm total PCBs, evaluate whether any further action is required.

10. Correct unacceptable erosion, settlement, or dislocation of the backfill, marine mattresses, or sheetpile retaining wall according to professional judgment based on visual observations, elevation surveys, diver assisted elevation surveys, bathymetric surveys, and tiltmeter data.

6.0 Specify Performance or Acceptance Criteria

6.1 Measurement Error

Measurement error is controlled through a quality assurance/quality control program, which will be defined in the QAPP.

Potential sources of sampling design error and data interpretation measures to control the error include, but are not limited to:

- Bathymetric surveys represent interpreted acoustical results and require "ground-truthing" for accurate interpretation of the sediment texture and elevation.
- Individual bioaccumulation tests will be used to derive BSAFs and estimate bioaccumulation in the mudflats. Multiple sampling locations and adequate numbers of replicate samples will reduce the potential impacts of local influences or erroneous results.
- Erroneous sample results or local influences can skew data interpretation. Multiple sampling rounds will be conducted (for groundwater and sediment sampling) at multiple locations, which are expected to minimize the impact of a single erroneous sample (or sample impacted by local influence). Results will also be compared to historical and background data.

6.2 Minimizing Error

To minimize unacceptable errors, laboratory analyses with a high degree of confidence and extensive quality assurance/quality control and documentation procedures are necessary. National Environmental Accreditation Conference (NELAC)-certified subcontract laboratories will be subcontracted. Further discussion of measurement sensitivity for analytical and non-analytical measurements will be provided in the LTM QAPP.

The quantity and frequency of sampling was previously established in the Revised Remedial Plan dated June 29, 2004 and was incorporated into the LTM planning documents, except for the number of sediment samples, which was reduced from 7 on-site samples and 1 background location to 4 on-site samples

and 1 background sample at the in-situ bioaccumulation test locations, based on prior studies.

7.0 Develop the Plan for Obtaining Data

Refer to the QAPP and accompanying FSP for details on sampling program design. Environmental samples/data will be obtained using the following general approach during the LTM period:

- Conduct plant community assessment to evaluate the total percentage of desired cap vegetation and the percentage of invasive vegetation on the upland cap at ten random locations until clean-up standards are met or USEPA otherwise determines that monitoring is no longer required.
- Visually monitor the condition of the upland cap (*e.g.*, for fissures or eroded areas) and conduct elevation surveys of the upland cap to monitor cap grades. Visually monitor the condition of the monitoring well network and LNAPL trench until clean-up standards are met or USEPA otherwise determines that monitoring is no longer required.
- Collect and analyze groundwater samples to characterize groundwater contaminant concentrations for the initial 5 years of the LTM period; provide recommendations regarding additional monitoring based on statistical evaluation of the data from the initial 5 year period.
- Monitor the LNAPL trench for the presence of non-aqueous phase liquid until clean-up standards are met or USEPA otherwise determines that monitoring is no longer required.
- Visually evaluate the condition of the mudflat backfill area until clean-up standards are met or USEPA otherwise determines that monitoring is no longer required.
- Conduct geophysical surveys (bathymetry and side scan sonar) to monitor the condition and location of the marine mattresses and portions of the mudflat backfill area that cannot be visually evaluated at low tide. Determine the thickness and spatial extent of sediments that may accumulate above the backfill and marine mattresses until clean-up standards are met or USEPA otherwise determines that monitoring is no longer required.
- Conduct in-situ bioaccumulation tests to calculate BSAFs and measure the bioaccumulation of PCBs in mudflat and reference locations for the initial 2 years of the LTM period; provide recommendations regarding additional monitoring based on the results from the initial 2 annual events.
- Conduct benthic community surveys during 2011 and 2012. Provide the data to EPA for qualitative evaluation regarding remedy effectiveness.
- Monitor the sheetpile retaining wall for deflection/rotation during the initial 2 years of the LTM period; provide recommendations for additional monitoring based on the data collected during the initial 2 years.

- Visually inspect the epoxy coating on the sheet pile wall, repair as necessary until clean-up standards are met or USEPA otherwise determines that monitoring is no longer required.
- Visually inspect the epoxy coating on the floor slab of Building 7. Any exposed concrete in an area exceeding 10 square centimeters will be recoated with epoxy until clean-up standards are met or USEPA otherwise determines that monitoring is no longer required. At the end of the initial 5 years of the LTM period, the operation and maintenance program will be re-evaluated.

Title: Procedures for Well Installation and Groundwater Sampling

I. Introduction

This guideline provides general reference information on monitoring well installation and groundwater sampling.

II. Definitions

The following terminology is applicable to groundwater sampling activities.

Groundwater Samples. Aqueous samples that are representative of the groundwater contained in an underlying aquifer.

Aquifer. A geologic formation, group of formations, or part of a formation that contains sufficient saturated permeable material to yield economical quantities of water to wells and springs.

Bailer. A tall, narrow, stainless steel or Teflon bucket equipped with a check valve on the bottom. The check valve allows water to enter from the bottom as the bailer is lowered, then prevents its release when the bailer is raised.

Electronic Water Level Indicator. An electronic sounder used to measure the depth to water in a well. The Electronic Water Level indicator consists of a milliammeter, a measured electrical cable to determine depth, and a contact electrode. When the electrode contacts the groundwater, an electronic circuit is completed that registers on the milliammeter. Upon contact, depth to groundwater is determined from the measured electrical cable.

Well Casing. Stainless steel, or PVC pipe used to keep the well borehole open.

Well Screen. Pipe with openings such as slots or holes to allow groundwater into the well from the aquifer.

III. Equipment

1. Field logbook
2. Digital camera
3. Electronic water level indicator
4. Centrifugal pump
5. Horiba U-10 Water Quality Checker, or equivalent
6. Nylon guide line (3 mm)
7. Disposable gloves
8. Plastic zip-loc bags
9. Plastic garbage bags
10. Measuring tapes
11. Polyethylene sheeting
12. Aluminum foil
13. MiniRAE 10.6 eV photoionization detector (PID)
14. Sampling jars
15. Paper towels
16. Sample coolers
17. Ice
18. DOT-approved 55 gallon drums, empty and clean, with sealable covers

IV. Guidelines

1. Monitoring Well Installation and Development

Monitoring well installation and development will be conducted in accordance with Section 02755 in the Revised Design Report (AMEC, 2007).

2. Groundwater Sampling

Groundwater sampling shall be conducted in accordance with USEPA Region II Low Flow methodology. Guidance for Low Flow sampling methodology is provided as an attachment to this SOP.

Generally, the following considerations should be taken into account during groundwater sampling activities.

A. Prior to entering the property, confirm with the property owner, tenant, landlord, etc. that access to the property was granted.

B. All equipment entering the well or included in the sampling chain should be cleaned using appropriate decontamination procedures and should be staged on 0.5-mil polyethylene plastic.

C. A new, clean pair of disposable nitrile gloves will be worn during sampling and changed between sampling locations.

D. All sample containers will be placed in separate plastic bags immediately after collection and decontamination of the outside of the container.

E. All used field equipment to be decontaminated will be placed in plastic bags. All field waste (*i.e.*, PPE, plastic sheeting, towels, etc.) will be placed in a plastic bag for subsequent disposal.

F. If possible, one member of the field team will be solely responsible for entering all field activity information into the field logbook (if applicable), while another member(s) will be solely responsible for collecting samples.

G. Sample collection activities will proceed progressively from the suspected least contaminated area to the suspected most contaminated area. Each monitoring well will be checked for the potential presence of free product using a decontaminated water/product level interface meter prior to well purging.

H. Field personnel will use equipment constructed of Teflon®, stainless steel or carbon steel that has been properly decontaminated. The decontamination procedures outlined in DMW4-SOP-02 will be followed.

I. Quality control/quality assurance (QA/QC) samples will be collected according to the FSP and QAPP. If environmental samples are collected solely for disposal purposes, QA/QC samples will not be collected.

J. The chain of custody procedures described in the FSP and QAPP will be followed.

K. The sample management procedures described in the FSP and QAPP will be followed.

L. Plastic sheeting should be placed around the well to prevent sampling equipment from coming into contact with the ground.

M. All downhole equipment must be constructed of Teflon®, stainless steel, or polypropylene.

N. Retrieval lines for pumps should be polypropylene monofilament, stainless steel, or Teflon coated wire. At a minimum, leaders constructed of these materials are acceptable.

O. Pumps should not be allowed to drop freely into the well.

P. Outer gloves should be changed before sampling or handling clean equipment.

Q. Tighten the cap on all sample containers after sampling.

R. The preferred order of sample collection is as follows:

1. In situ measurements (*i.e.*, temperature, pH, Eh, conductivity, salinity, and turbidity)
2. Polychlorinated Biphenyl (PCB) Congeners
3. PCB Aroclors
4. Dioxins
5. Semivolatile Organic Compounds (SVOCs)
6. Total Metals
7. Dissolved Metals

V. References

ASTM D4448. Standard guide for sampling groundwater monitoring wells. American Society of Testing and Materials, Philadelphia, Pennsylvania. October 1985.

ASTM D4750. Standard test method for determining subsurface liquid levels in a borehole or monitoring well. American Society for Testing and Materials, Philadelphia, Pennsylvania. November 27, 1987.

EPA, 1984. Characterization of hazardous waste sites – A methods manual, Volume II, Available sampling methods. Second edition. Section 3.4, Groundwater pp. 3-25 to 3-31. Section 3.4.3, Method 111-9: Sampling monitor wells with a bucket type bailer, pp-3-35 to 3-37. Environment Monitoring Systems Laboratory, Office of Research and Development. U.S. Environmental Protection Agency, Las Vegas, Nevada. EPA-600/4-84-076. December 1984.

EPA, 1987. A compendium of Superfund field operations methods. Section 8.5.6.9: groundwater sampling considerations, pp 8.5-42 to 8.5-43. Section 8.5.6.8.9: Evaluation of sample collection materials, pp 8.5-41 to 8.5-42. Section 8.5.6.4.1: Bailers p. 8.5-8 Office of Emergency and Remedial Response, Office of Waste Programs Enforcement. U.S. Environmental Protection Agency, Washington, D.C. EPA/540/P-87/001. December 1987.

Title: Soil Cap, LNAPL Trench, and Monitoring Well Network Condition Surveys

1.1 Introduction

This procedure describes the equipment and methods used to monitor the condition of the upland soil cap, light non-aqueous phase liquid (LNAPL) interceptor trench, and groundwater monitoring well network at the Metal Bank Superfund Site.

1.2 Cap Monitoring

The condition of the upland cap will be monitored a minimum of four times per year throughout the LTM period. Supplementary surveys will be conducted within 30 days of a severe (25 year) storm. The occurrence of a 25-year storm will be determined by reviewing National Oceanic and Atmospheric Administration (NOAA) and/or National Climactic Data Center (NCDC) regional precipitation information every two weeks to evaluate whether precipitation equivalent to that associated with a 25-year storm (in terms of daily precipitation) was experienced in the region of the site.

During each condition survey, the entire area of the soil cap will be observed for:

- Visible debris, litter, and waste.
- Loss of vegetative cover or growth of non-native, invasive or undesirable species.
- Integrity of cap and design slopes.
- Erosion damage, leachate breakthrough of any type, or settlement/cracking.
- Integrity of drainage structures (including sediment build-up or any indications of ponding or pooling).
- Condition of access roads, gates, and fences.
- Integrity of groundwater monitoring wells.

Mowing must be performed prior to the condition survey but after the plant community evaluation described below.

As a component of the quarterly surveys, a biologist will evaluate the plant community on the cap twice each year (late spring and late summer) for the first two years following the completion of remedial construction and annually (mid-summer) thereafter. The percentage of designed cap vegetation and invasive vegetation (if encountered) will be determined at 10 random locations on the cap surface.

An annual elevation survey will also be conducted to evaluate the contours of the upland cap.

The following observed conditions will trigger upland cap maintenance and repair activities (following advance notification to USEPA):

- Survival of designed vegetative cover at less than 80% of the cap surface area.
- Observations of invasive vegetation on 10% or more of the cap surface area.
- Elevation survey results that indicate changes in cap grades or contours that would allow stormwater to pond or otherwise interfere with the cap's ability to shed precipitation.
- Observations of erosion damage, leachate breakthrough, or unacceptable settlement/cracking.

Documentation of maintenance/repairs will be submitted to USEPA following completion of the work.

1.3 LNAPL Trench Monitoring

The LNAPL trench will be checked for the presence of free product every two weeks during the first quarter following the completion of remedial construction and quarterly thereafter.

At each manhole located along the LNAPL trench, personnel will use a decontaminated groundwater level/product interface probe to investigate for the presence and thickness of potential free product. Measurement results will be recorded in the field notes. Visual observations of sheens will also be recorded. If necessary, a dedicated, disposable, clear bailer may be lowered into the sumps of the LNAPL trench to investigate for the presence of product.

If a sheen is observed or the presence of free product is detected, adsorbent booms will be deployed in the LNAPL trench to collect product. The booms will be checked each quarter for significant staining as a trigger for removal and replacement. The sheet pile wall and bank areas are to be checked for indications of product. If absorbent booms prove to be inadequate for control of product in the LNAPL trench, recommendations will be submitted to USEPA for additional mitigative measures, which may include the installation of an active product collection system.

During the LNAPL trench monitoring, the condition of the LNAPL trench equipment will be evaluated for indications of damage. Observed damage will be repaired (with advance notice to USEPA), as necessary, and documentation of the completed work will be submitted to USEPA.

1.4 Monitoring Well Network Condition Survey

During the quarterly surveys for condition of the upland cap, the aboveground structures of the monitoring wells will be visually evaluated for condition (protective casings, padlocks, etc.). Damaged wells will be repaired (with advance notice to USEPA), as necessary, and documentation of the completed work will be submitted to USEPA.

1.5 Recordkeeping

Observations collected during upland cap, LNAPL trench monitoring, and monitoring well condition surveys will be recorded in a bound field notebook or on pre-prepared recordkeeping forms. Observations will be photo-documented and will include pertinent information including date and time of monitoring, names of personnel present, weather, specific locations for recorded observations, etc.

Title: Sediment Collection Using Hand Coring Devices (including push cores, piston cores, etc.)

I. Introduction

This procedure describes the equipment and methods to be used to collect sediment cores for the Metal Bank Superfund Site long term monitoring activities. This procedure specifically addresses collection of sediment cores via hand operated coring devices (*e.g.*, push coring and piston coring).

II. Equipment and Supplies

The following equipment will be needed to collect sediment cores:

1. Push core and ancillary equipment required for use.
2. Piston core and ancillary equipment required for use.
3. Polycarbonate or Cellulose Acetate Butyrate (CAB) Tube of appropriate diameter and wall thickness for use as a liner with the coring apparatus.
4. Hand operated winch (*e.g.*, 'come-along') and tripod or tetra pod (*e g.*, folding ladder) or other lifting frame if needed.
5. Personnel protective equipment (PPE) - including hard hat, steel toes boots, safety glasses, ear plugs, and clean disposable gloves (nitrile preferred).
6. Measuring tapes, scales, field books, pens, pencils, and pavement markers, digital camera, field application equipment, and GPS.
7. Tape – electrical, duct, and clear packing tape.

III. Guidelines

1. All data from sediment core collection will be recorded in the project field notes.

2. In the mudflat areas, cores may be collected at low tide by personal walking onto the mudflat or from jon boats. In the Delaware River, cores will be collected from an appropriate sampling vessel. If on land (*e.g.*, intertidal or other location inaccessible by heavy equipment) appropriate PPE will be used for the hand collected sample. A hand held GPS/antenna will be used to determine the coordinates of the actual sampling location.

3. Using the hand held GPS system, mark or position the vessel at a location within 5 feet of the preprogrammed target coordinates for each sample location. Record

in the field application the actual location from which the core was collected and the target location.

4. Use a calibrated steel rod to probe the sediment surface 3 to 5 ft away from the target location to determine the sediment thickness and type.

   - If the estimated sediment thickness at the probing area is greater than 6 inches, record probing information in the field application and attempt to collect a core using the hand core device (steps 5-9).
   - If the estimated sediment thickness at the probing area is less than 6 inches, additional probing of the sediment surface will be conducted within 3 feet of the target location for deeper sediments. If thicker sediments are found, relocate to the new location and attempt to collect a core (steps 5-9).
   - If sediment depth appears to be systematically less than 6 inches, make one attempt at collection with the hand core device. If 80% recovery is not achieved after one attempt, collect a sample with a ponar dredge.

5. Once the targeted area is deemed suitable for core collection, mount a clean coring tube onto the coring device.

6. Prior to pushing in the core tube, mark the target penetration depth on the outside of the tube. Lower the coring apparatus with the core tube attached vertically through the water column (cutting edge first) until the sediment water interface is reached. Continue to push or hammer by hand the hand or piston core device until the target depth is reached. If using a piston core, activate the release mechanism.

7. Measure and record the depth of core tube penetration into the sediments in the field database.

8. Pull the apparatus upward out of the sediment/soils (using a hand operated winch from a tripod or other lifting frame as needed), and raise it just above the sediment water interface maintaining the core in a vertical position.

9. As soon as possible (while the core is still under water if possible) place a cap over the bottom of the core to prevent the loss of material from the core tube. Secure the cap in place with electrical or duct tape when brought on board the vessel.

10. Record the penetration depth in the field application. Remove the core liner from the outer tube. Place a second cap on the top of the core tube. Secure the cap in place with electrical or duct tape. Rinse the outside of the core tube with a small

amount of river water. Measure the recovered length of the sediment core and record the data in the field application.

11. Compare the length of the recovered core with the core penetration depth.

    - If the recovered length of the sediment core is more than 80% of the penetration depth, keep the core.

    - If an insufficient amount of material is recovered, put the core tube aside while additional attempts are made to meet recovery goals (see below). If a compliant core is obtained, discard the non-compliant core into a re-sealable 5-gallon pail and store for subsequent IDW disposal.

    A. An additional attempt will be made at a minimum distance of 1 foot from previously attempted locations.
    B. A maximum of three attempts to collect a core will be made for a given location ID.
    C. Rinse the core tubes with river water, or tap water and deionized water if river water is not available, between consecutive attempts.
    D. If all three attempts to collect a core are unsuccessful based on recovery alone (*i.e.*, less than 80% recovery), retain the final core for analysis and put flag in the field application that indicates that the targeted recovery was not achieved.
    E. If an acceptable core cannot be collected within 3 feet of the node location, collect a ponar dredge sediment grab sample and note conditions preventing core collection in the field database.

12. After a successful core recovery enter prompted information into the field notes:

    A. Date
    B. Time of recovery
    C. Actual coordinates of the sample location
    D. Water depth (ft)
    E. Core tube material (*e.g.*, Lexan®)
    F. Core penetration depth (inches)
    G. Observations, including probing results

13. Draw an arrow on the core tube with permanent marker to mark the top of the core. Label the core with waterproof label or permanent marker indicating station ID, date, and time.

14. Store the core vertically in a core tube cooler on ice. Use a tarp to keep the cores in the dark until they are transported to the field processing facility.

15. At locations where core samples cannot be collected, grab samples will be collected by lowering a ponar dredge until it comes in contact with the sediment and the release mechanism trips.

16. Decontaminate the equipment and sampling tools according to decontamination procedures described in Section 7.0 of the FSP.

IV. Reference

American Society for Testing and Materials (ASTM), 2000. Standard Practice for Thin-Walled Tube Sampling of Soils for Geotechnical Purposes. Designation: D 1587-00.

Title: Collecting Surface Sediments Using an Ekman or Ponar Dredge

I. Introduction

This procedure describes the equipment and methods to be used to conduct surface sediment sample collection during long-term monitoring activities at the Metal Bank Superfund Site. For the purpose of this method, surface sediment is considered to range from 0 to 6 inches in depth. Collection of surface sediment can be accomplished with a system consisting of a remotely activated device (dredge) and a deployment system. This technique consists of lowering a sampling device (dredge) to the surface of the sediment by use of a rope, cable, or extended handle. The mechanism is activated, and the device entraps sediment in spring-loaded or lever-operated jaws.

An Ekman dredge sampling device is a lightweight sediment sampling device with spring activated jaws. It is used to collect moderately consolidated, fine textured sediment. For this project, once the sample has been retrieved, the Ekman will be operated in the top sampling mode and will therefore function as a box corer. It will be used to collect undisturbed sediments, taking care to preserve the quiescent sediment surface/water interface.

A Ponar dredge is a heavyweight sediment sampling device with weighted jaws that are lever or spring activated. It is used to collect consolidated fine to coarse textured sediment. Such a device will not be utilized for the sediment sampling activities proposed as it may disturb the depositional setting of the material during its deployment.

II. Equipment and Supplies

The following equipment will be utilized to conduct sediment sampling:

1. Ekman dredge and materials are described in the individual sections below.
2. Personnel protective equipment (PPE) - including steel toe boots (if aboard a boat), waders (if in a stream), and disposable gloves. (refer to SSHP requirements for full PPE requirements).
3. Log sheets to record all field collected data.

III. Guidelines

Using the on-board RTK DGPS system, maneuver the sampling vessel to within 10 ft (maximum distance) of the pre-programmed target coordinates for each sample

location, and stabilize the vessel as much as possible. Similarly locate the sampling position at stream or tributary locations.

Confirm the location by examining the site map, bathymetric survey map, and landmarks. Collect sample using Ekman or Ponar dredge using the following guidelines:

Ekman Dredge Guidelines (6 inch model):

1. Install and secure the polycarbonate Ekman liner (necessary only when collecting specific subsamples of the 0-6 inch stratum, *e.g.*, a 0-1 inch sample with minimal disturbance to the retrieved sediment).

2. Attach a sturdy nylon rope or stainless steel (SS) cable through the hole on the top of the bracket, or secure the extension handle to the bracket with machine bolts.

3. Cock the Ekman: Attach springs to both sides of the jaws. Fix the jaws so that they are in open position by placing trip cables over the release studs. Ensure that the hinged doors on the dredge top are free to open.

4. Lower the sampler to a point 4 to 6 inches above the sediment surface.

5. If the sampler is on a rope or cable, drop the sampler to the sediment. If an extension handle is used the sampler will be pushed into the sediment approximately 4 inches to prevent overfilling of the dredge.

6. Trigger the jaw release mechanism by lowering a messenger down the line, or by depressing the button on the upper end of the extension handle.

7. Raise the sampler evenly as jerking motions or excessive speed may disturb the sample. Slowly decant any free liquid through the top of the sampler. Care should be taken to retain the fine sediment fraction during this procedure.

8. Open the sampler jaws and transfer the sample into a stainless steel, plastic or other container by re-cocking the Ekman while it is resting on the container. Care should be taken to retain the fine sediment appropriate composition (*e g.,* Teflon) container. The liner, if used, will retain the shape of the sample inside of the Ekman and facilitate removal of sample in the field when it is positioned on a holder designed to accept the sample and liner. This is necessary for discrete surface sample collection (usually the top 2 to 2.5 centimeters [1 inch]), for example, which is collected from the top of the sediment surface only. This portion of the sample should be removed from the Ekman through the top of the sampler, or while still in the liner after removed from the Ekman as discussed above. The liner may be marked on the outside to easily identify the amount of material to remove using decontaminated SS spoons or a SS flat blade (putty knife) bent to retrieve the sample efficiently. Ensure that non-dedicated containers have been adequately decontaminated. If necessary, continue to collect additional sediment grabs until sufficient material has been secured to fulfill analytical requirements. Thoroughly homogenize and then transfer sediment to

sample containers appropriate for the analyses requested. Samples for volatile organic analysis must be collected directly from the bucket before homogenization to minimize volatilization of contaminants.

Ponar Dredge Guidelines:

1. Attach a sturdy nylon rope or steel cable to the ring provided on top of the dredge.

2. Arrange the Ponar dredge with the jaws in the open position, set the trip bar so the sampler remains open when lifted from the top. If the dredge is so equipped, place the spring loaded pin into the aligned holes in the trip bar.

3. Slowly lower the sampler to a point approximately two inches above the sediment.

4. Drop the sampler to the sediment. Slack on the line will release the trip bar or spring loaded pin; pull up sharply on the line to close the dredge.

5. Raise the dredge to the surface and slowly decant any free liquid through the screens on top of the dredge. Care should be taken to retain the fine sediment fraction during this operation.

6. Open the dredge and transfer the sediment to a stainless steel, plastic or other appropriate composition (*e.g.*, Teflon) container. Ensure that non-dedicated containers have been adequately decontaminated. If necessary, continue to collect additional sediment until sufficient material has been secured to fulfill analytical requirements. Thoroughly homogenize the sediment and then transfer sediment to sample containers appropriate for the analyses requested. Samples for volatile organic analysis must be collected directly from the bucket before homogenization to minimize volatilization of contaminants.

IX References

Adapted from: SOP#EH-02, East Helena Site, Montana. September 2003

Mason, B.J. 1983. Preparation of soil sampling protocol: techniques and strategies. EPA-600/4-83-020.

Barth, D.S., B.J. Mason. 1984. Soil sampling quality assurance user's guide. USEPA-600/4-84-043.

USEPA. 1984. Characterization of hazardous waste- a methods manual: Volume II: Available sampling methods, second edition. EPA-600/4-84-076.

de Vera, E.R., B.P. Simmons, R.D. Steohen, D.L. Storm. 1980. Samplers and sampling procedures for hazardous waste streams. EPA-600/2-80-018.

Title: In-Situ Sediment Bioaccumulation Tests with *Lumbriculus Variegatus*

I. Introduction

This procedure describes the equipment and methods to be used to perform in-situ bioaccumulation testing using *Lumbriculus variegatus* on an estuarine, tidal mud flat for the Metal Bank Superfund Site long term monitoring activities. The testing will be performed at 4 locations in the mudflat at the Metal Bank site and at 2 off-site reference locations. Six replicate test chambers will be installed at each sampling location.

II. Equipment and Supplies

The following equipment will be needed to perform the bioaccumulation testing:

1. Cellulose acetate butyrate (CAB) or similar material tubing (4-inch outer diameter and 12-inch long section) and polyethylene end caps sized to fit tubing.
2. 80-µm polypropylene mesh.
3. Nalgene tubing (0.5-inch outer diameter).
4. 100 ml glass tubes.
5. 4-foot long sections of rebar for marking test chamber locations.
6. *Lumbriculus variegatus*.
7. Hand tools including drill and ½-inch drill bit, pinch clamps, scissors, silicone caulk, elastic bands, wire tray shovel, 50- µm brass sieve, forceps, large glass dishes, a balance, and ziplock bags.
8. Personnel protective equipment (PPE) – including hard hat, steel toe boots, safety glasses, and clean disposable gloves (nitrile preferred).
9. Measuring tapes, field books, pens, pencils, digital camera, and GPS.
10. Tape – electrical, duct, and clear packing tape.

III. Test Equipment Preparation and Test Procedures

A. Test Chamber Preparation

1. Cut the 4-inch outer diameter (O.D.) tubing into 12-inch long sections to serve as organism test chambers.
2. Drill approximately 30-40 holes into the sides of each tube and wrap 80-µm Polypropylene mesh securely around the entire chamber. Silicone caulk can be used to adhere the mesh to the chamber.
3. Install two polyethylene end caps on each test chamber.

4. Add one inlet port to the top side of each test chamber by drilling a 0.5-inch hole in the end cap and attaching an appropriate length of Nalgene (0.5-inch O.D.) tubing with silicone caulk. The inlet port should be closed with a plastic pinch clamp. Port tubing should be of sufficient length to extend above the water surface to allow for test organism addition after installation of the test chambers in the mudflat.
5. The assembled test chamber should be soaked in deionized water for 24 hours prior to use in bioaccumulation testing.

B. Test Organism Preparation

1. *Lumbriculus variegatus* are to be obtained from a reputable supplier.
2. Collect 10% of the test organism population and analyze for the compound(s) of interest prior to deployment of the test chambers.
3. Acclimate test organism population to site water (including expected temperature) prior to testing.
4. For each test replicate, approximately 20 g of L. *variegates* are placed into a container with site water. Organisms should be added to transport containers no more than two hours before deployment.
5. Six replicate test chambers should be randomly assigned to each of the six sites (4 test treatment sites, 2 field control sites) and will be deployed over a 2 day period.

C. Test Chamber Deployment

1. Prior to initiating in-situ bioaccumulation tests, the testing and reference site locations will be determined and sediment for chemical analyses (total organic carbon) and grain size will be collected from each sampling location. Site water is to be characterized by measuring temperature, pH, DO, hardness, alkalinity, ammonia, conductivity and turbidity.
2. Tests will include reference controls (culture water and control sediments), field controls (sediment has background level of compound of interest), and field test replicates.
3. Each field site (test and control) will consist of an identical number of replicate in-situ test chambers (6 replicates).
4. Approximately 1 gallon of surficial sediment collected from each location will be placed inside each test chamber. Any obvious indigenous organisms will be removed from sediment before it is placed in the test chamber.
5. Once filled with sediment, each test chamber is to be filled with site water, capped and secured into position by elastic bands within a wire basket.

6. A 4-foot length of rebar is to be driven into the mudflat at each testing location until only one foot remains above the surface. This is so test chambers can be located if they become buried.
7. After a three day period to allow equilibration of water and sediment within the test chambers, a small amount of water is to be siphoned through the mesh screen and tested for dissolved oxygen (DO) concentrations. Site water is characterized by measuring temperature, pH, DO, conductivity and turbidity.
8. Remove the pinch clamp from the inlet port and insert a small funnel into the port. The test organisms are to be added to each replicate chamber via the port. Gently flush the port with site water to 'wash' test organisms into the test chamber.
9. Test chambers should be checked every Monday, Wednesday and Friday during the exposure period (and as soon as possible after storms resulting in unusually high flow/turbulence on the river) to verify that the correct test chamber positioning is maintained.

D. Test Chamber Retrieval

1. After 28 days, the test chambers will be retrieved over a 2 day period.
2. Test chambers should be located using the rebar markers and then gently dug up using a shovel.
3. Each test chamber should be checked for damage, *e.g.*, holes in the window mesh that would allow escape by test organisms or entry by indigenous organisms.
4. A small amount of water is to be siphoned through the mesh screen and tested for DO concentrations. Site water is to be characterized by measuring temperature, pH, DO, hardness, alkalinity, ammonia, conductivity and turbidity. Total organic carbon will be analyzed on chamber sediments present at the end of deployment.
5. Replicate test chambers will be placed in individual insulated coolers for each site and transported to a processing site. A completed chain-of-custody will accompany each cooler.
6. Upon receipt at the processing site, the chain-of-custodies will be reviewed and the contents of each cooler checked.
7. Organisms should be removed from test chambers and inventoried as either dead or alive within two hours after test chamber collection.

E. Test Organism Retrieval

1. The exterior of each test chamber will be rinsed with deionized water to remove any indigenous organisms adhering to the outside of the chamber.
2. Remove an end cap from each chamber, the contents of which are then emptied into a large, dedicated glass dish. The interior of each chamber will be thoroughly

rinsed with deionized water to ensure that all organisms are removed from the test chamber. Any observed indigenous organisms should be removed.

3. Test organisms in each test chamber are to be classified as either alive or dead. Death is determined by placing test organisms into fresh water. Healthy L. variegates will be bright red and cluster into a tight ball. Dead and failing L. variegates specimens will float separately and will have lost their bright red color.
4. An acceptable test should have at least 80% mean survival in control replicates.
5. Living organisms will be rinsed of all debris and blotted dry with clean, dedicated paper towels.
6. The live *L. variegatus* will be sorted from each replicate and composited for the location as a whole, then placed in beakers of clean culture water for 12 hours for gut purging.
7. After purging, test organisms at each location will be weighed, placed in ziplock bags, frozen, and sent to the lab as soon as possible for analysis of concentrations of the contaminants of concern.

IV. References

ASTM. 2001. Standard Guide for Determination of the Bioaccumulation of Sediment-Associated Contaminants by Benthic Invertebrates. E1688-00a. In Annual Book of ASTM Standards, Vol. 11.05, West Conshohocken, PA.

ASTM. 2005*. Standard Guide for Assessing Freshwater Ecosystem Impairment Using Caged Fish or Invertebrates for Tiered Diagnosis of Stressors -*DRAFT

Dr. J. Diamond, Personal Communication May 5, 2009.

USEPA. 2000. Methods for Measuring the Toxicity and Bioaccumulation of Sediment-Associated Contaminants with Freshwater Invertebrates. Second Edition. U.S. Environmental Protection Agency, Office of Water, Washington, D.C. EPA-600-R-99-0064.

Title: Benthic Macroinvertebrate Sampling

I. Introduction

This procedure describes the equipment and methods to be used to conduct benthic macroinvertebrate sampling on an estuarine, tidal mud flat for the Metal Bank Superfund Site. This procedure is adapted from USEPA protocols described in *Rapid Bioassessment Protocols for Use in Streams and Wadeable Rivers: Periphyton, Benthic Macroinvertebrates, and Fish* (Barbour et al. 1999).

Sampling will be conducted at four locations in or near the mudflat at the Metal Bank Site and at two off-site reference locations. Sampling will be conducted for one event each in 2011 and 2012 of the long-term monitoring period for the site.

II. Equipment and Supplies

The equipment needed to conduct benthic macroinvertebrate sampling may include but is not limited to the following:

1. Standard D-frame dip net, 500 μ opening mesh, 0.3 meter frame width (~ 1.0 ft)
2. Sieve bucket, with 500 μ opening mesh
3. 95% ethanol
4. Sample containers, sample container labels, chain of custody forms
5. Forceps
6. Pencils, clipboard
7. Benthic Macroinvertebrate Field Data Sheet
8. First aid kit
9. Waders (chest-high or hip boots)
10. Gloves
11. Camera
12. Global positioning system (GPS) unit.
13. Horiba U-10 Multiparameter Water Quality Meter (or equivalent)

III. Sampling Methods

Benthic macroinvertebrates are collected systematically by jabbing into the sediment with a D-frame dip net. A total of 20 jabs are taken from the target habitat area resulting in sampling of approximately 3.1 square meters of habitat. Additionally, the following water quality parameters will be measured in the field at each location: temperature, dissolved oxygen, salinity, conductivity, and pH using an appropriate water quality meter (*e.g.,* Horiba U-10 or equivalent).

1. Whenever possible, the sample area should be upstream from any road or bridge

crossing to minimize its effect on water velocity, depth and overall habitat quality. There should be no major tributaries discharging to the target area.

2. Before sampling, document site description, weather conditions, and land use. Other notes should include water body characteristics and important structures, plants, and attributes of the bank and near areas. A GPS should be used for coordinate determination (*i.e*, latitude/longitude). Readings should be taken at the furthest downstream point of the sampling area.
3. Sampling begins at the downstream end of the selected location and proceeds upstream. A total of 20 jabs will be taken over the length of the target area; a single jab consists of forcefully thrusting the net into a productive habitat for a linear distance of 0.5 meter.
4. Every three jabs, more often if necessary, wash the collected material by running clean stream water through the net two to three times. If clogging occurs that may hinder obtaining an appropriate sample, discard the material in the net and redo that portion of the sample in the same habitat type, but in a different location. Remove large debris after rinsing and inspecting it for organisms; place any organisms found into a sample container. Do not spend time inspecting small debris in the field.
5. Transfer the sample from the net to sample container(s) and add enough 95% ethanol (preservative) to cover the sample. Forceps may be needed to remove organisms from the net. Place a label indicating the date, sampling location, and collector name on the sample container. If more than one container is needed for a sample, each container label should contain all the information for the sample and should be numbered (*e.g.*, 1 of 2, 2 of 2, etc.).
6. Record the number of jabs attempted.
7. Return samples to laboratory for processing macroinvertebrate samples by sub-sampling and sorting genus/species.

IV. Quality Control (QC) in the Field

1. Sample labels must be properly completed, including the date, sampling location, and collector's name. Chain-of-custody forms, if needed, must include the same information as the sample container labels.
2. After sampling has been completed at a given site, all nets, pans, etc. that have come in contact with the sample should be rinsed thoroughly, examined carefully, and picked free of organisms or debris. Any additional organisms found should be placed into sample containers. The equipment should be examined again prior to use at the next sampling site.

V. Laboratory Processing for Macroinvertebrate Samples

1. Prior to processing any samples, laboratory shall verify that all samples have arrived and are in proper conditioning for sampling.

2. A qualified sorter will thoroughly rinse the sample in a 500μm-mesh sieve to remove preservative and fine sediment. Large organic material (i.e., whole leaves, twigs, algal) not removed in the field should be rinsed, visually inspected and discarded. Soak sample contents in water for 15 minutes to hydrate the benthic organisms. This will prevent them from floating on the water surface during sorting. If more than one container per sample location was used, all containers should be combined at this time, gently mixing the sample by hand while rinsing to make homogeneous.
3. After washing, spread the sample evenly across a pan marked with grids approximately 6 cm by 6 cm. Record the presence of large or obviously abundant organisms, but do not remove these organisms from the pan.
4. Using a random number table, select 4 numbers corresponding to squares within the gridded pan. Remove all material (organisms and debris) from the four grid squares, and place the material into a shallow which pad, adding a small amount of water to facilitate the sorting. If there appear (through cursory count of observation) to be 200 organisms ±20% (cumulative of 4 grids), then subsampling is complete. Any organism that is lying over a line separating two grids is considered to be on the grid containing its head. For organisms where it may not be possible to determine the location of the head (i.e., worms), the organism is considered to be in the grid containing most of its body. If it is determined that more than 200 organisms pertain in the 4 selected grids, organisms shall be transferred to a second gridded pan. Sorting will continue until the 4 randomly selected grids are found to have 200 organisms ±20%. The total number of grids for each subsorting level should be noted.
5. Sorted debris residue shall be saved in a spate container and labeled as "sorted residue" in addition to all prior sample level information and preservative information. The remaining unsorted residue shall also be saved in a separate container labeled "sample residue". Length of storage and archival shall be determined by the selected laboratory or benthic section supervisor.
6. The sorted 200 organisms (±20%) subsample shall be placed into glass vials and preserved in 70% ethanol. Sorted subsample will be preserved until it is ready for identification. If identification is to occur immediately, the subsample can be placed in a petri dish instead of vials.
7. Midge (Chironomidae) larvae and pupae should be mounted on slides in an appropriate medium (e.g., Euperal, CMC-9). Worms (Oligochaeta) must also be mounted on slides. Slides should be appropriately labeled.
8. Laboratory Bench Sheets should be completed with subsampling/sorting information, grids picked, time expenditure and number of organisms. All laboratory QC information should be recorded on the same data sheet. Sorting efficiency should be calculated to determine whether sorting efforts pass or fails (see VI Quality Control (QC) in the Laboratory).

VI. Quality Control (QC) in the Laboratory

1. Ten percent of sorted samples in each lot should be examined by laboratory QC personnel or equivalently qualified personnel. The QC person will examine grids chosen and tray used for sorting and will look for organisms missed by the sorter. Organisms found will be added to the sample vials. If the QC worker finds less than 10 organisms (or 10% in larger subsamples) remaining in the grids or sorting tray, the samples passes. Likewise, if the QC worker finds more than 10 (or 10%) organisms, the sample fails. If the first 10% of sample lot fails, a second 10% of the sample lot will be checked by the QC worker.
2. Following laboratory processing of any sample, all sieves, pans, trays, etc., that have come in contact with the sample will be rinsed thoroughly, examined carefully, and picked free of organisms or debris. Any organism found will be added to the sample residue.

VII. Identification of Macroinvertebrates

1. A qualified taxonomist will identify most organisms to the lowest practical level (genus/species (RBP III) level) using a dissecting microscope. Taxonomy should be recorded to the genus/species (RBP III) level. Any difficulties encountered during identification (e.g., missing gills) should be noted.
2. The identity and number of organisms shall be recorded on the Laboratory Bench Sheets. Tallying with a 'slash' or tally counter can be used to keep track of the cumulative count. Details regarding the life stage of the organisms, the taxonomist's initials and Taxonomic Certainty Rating (TCR) as a measure of confidence should also be recorded.
3. The back of the bench sheet should be used to explain TCR ratings of condition of organisms. Insights on data interpretations can also be included here. If QC was performed (see VIII. Quality Control for Taxonomy), information should be recorded here.
4. Materials from the samples can be archived in small jars capped tightly with a small amount of denatured 70% ethanol. Ethanol levels will need to be examined periodically and replenished as needed to preserve the samples.

VIII. Identification of Macroinvertebrates

1. Proper handling and record keeping of all samples and subsamples should be maintained. A certified taxonomist not responsible for the original identifications should spot check samples corresponding to the identifications on the bench sheet.
2. The taxon validating results should be documented with the word "val." and the first initial of the person validating the identification.
3. Sample log notebooks will be maintained and updated throughout the identification process.

4. A library of basic taxonomic literature should be maintained and updated as needed in the taxonomic laboratory. Taxonomists should participate in periodic training on specific taxonomic groups to ensure accurate identifications.

VI. References

Barbour, M.T. et al. 1999. Rapid Bioassessment Protocols for Use in Streams and Wadeable Rivers: Periphyton, Benthic Macroinvertebrates and Fish. Second Edition. EPA 841-B-99-002. Office of Water, US Environmental Protection Agency, Washington, DC

Attachment 2

Long Term Monitoring – Work Plan

Cottman Avenue PRP Group

METAL BANK SUPERFUND SITE
PHILADELPHIA, PA

LONG TERM MONITORING
FINAL WORK PLAN

May 2010

Report Prepared By

Malcolm Pirnie, Inc.

824 Market Street
Suite 820
Wilmington, DE 19801

MALCOLM PIRNIE

Contents

1. Introduction **1-1**

1 1. Overview 1-1
1 2 Approach to Development of Work Plan 1-1
1.3 Scope of Work 1-2
1 4 Work Plan Content 1-2

2. Environmental Setting **2-1**

2 1 Geology 2-1
2 2 Surface Water Hydrology 2-2
2 3 Components of the Remedial Action 2-2

3. Work Plan Rationale **3-1**

3 1 Conceptual Site Model 3-1
3 1 1 Migration of Contaminants within Surface Run-off 3-1
3 1 2 Migration of Contaminants from Groundwater to Surface Water and the Soil Cap 3-1
3.1 3 Migration of Contaminants within Surface Water and Sediments 3-1
3.2 Data Planning Process 3-2

4. Long-Term Monitoring Tasks **4-1**

4 1 Overview . . . 4-1
4 2 Upland Cap Monitoring 4-1
4.3 Groundwater Monitoring . . . 4-2
4 4 LNAPL Trench Monitoring 4-2
4 5 In-situ Bioaccumulation Testing, Sediment Analysis, and Benthic Community Survey 4-3
4 6 Subaqueous Cap Integrity Verification and Bathymetric Surveys 4-4
4 7 Sediment Accumulation Monitoring 4-5
4 8 Sheetpile Retaining Wall Monitoring . . . 4-5

5. Data Evaluation and Required Actions **5-1**

5 1 Data Validation 5-1
5 2 Data Evaluation 5-1
5 3 Decision Trees and Required Actions 5-1

6. Glossary of Abbreviations **6-1**

7. References **7-1**

List of Tables

Table 4-1 Long-Term Monitoring Task Summary

Table 4-2 Groundwater Monitoring Frequency and Analytical Parameters

List of Figures

Figure 1-1 Metal Bank Site Location

Figure 4-1 Long Term Monitoring On-site Sampling Locations

Figure 4-2 Long Term Monitoring Background Sampling Locations

Figure 5-1 Decision Tree for Upland Cap Monitoring

Figure 5-2 Decision Tree for Groundwater Monitoring

Figure 5-3 Decision Tree for LNAPL Trench Monitoring

Figure 5-4 Decision Tree for Backfill/Marine Mattress Area Monitoring

Figure 5-5 Decision Tree for Sediment Monitoring

Figure 5-6 Decision Tree for In-situ Bioaccumulation Testing

1. Introduction

1.1. Overview

This Work Plan presents the technical approach for conducting long-term monitoring (LTM) activities for the Metal Bank Superfund Site, Philadelphia, PA. As stated in the Revised Remedial Plan (dated June 29, 2004), the purpose of this LTM Work Plan is to gather data to determine the remedy's effectiveness. It is expected that the data will document decreasing risks to human and ecological health during the LTM period, due to the implementation of the remedy. These collected data will also be used by the United States Environmental Protection Agency (USEPA) to perform a Five Year Review of the remedial action to evaluate its protectiveness of human health and the environment.

As described in the Pre-Design Investigation Report (Ogden/Hart Crowser, 2000), the Metal Bank Superfund Site is located on the western shore of the Delaware River, south of Milnor Street and east of Cottman Avenue in Philadelphia, PA (refer to Figure 1-1). The site consists of both upland areas and sediment areas in the Delaware River, which is tidally-influenced in this vicinity with daily tidal fluctuations of approximately 6-7 feet. The Pre-Design Investigation Report indicates that the Metal Bank site was used for the storage and reclamation of various scrap metals from 1962 until 1979, with scrap metal storage possibly continuing until 1984 or 1985. Site activities included electrical transformer salvage operations and it is reported that oil from the transformers was discharged to a concrete catch basin connected to an underground storage tank (UST) (Ogden/Hart Crowser, 2000).

In 1972, reports of oil seeping from the banks of the Delaware River at the Metal Bank site prompted inspections by the U.S. Coast Guard, which concluded that the source of the oil seeps was the UST used to store transformer oil generated by the on-site reclamation activities. Further information on subsequent Metal Bank enforcement and site investigation activities is provided in the Pre-Design Investigation Report (Ogden/Hart Crowser, 2000).

1.2. Approach to Development of Work Plan

Preparation of this Work Plan was based upon a review and consideration of information, data, and discussions related to the following:

- Revised Remedial Action Plan (dated June 29, 2004)
- Long-term monitoring scoping meeting with USEPA on August 6, 2008 (refer to minutes submitted 27 October 2008).

- Long-term monitoring scoping meeting with USEPA on November 13, 2008 (refer to minutes submitted January 9, 2009).
- Long-term monitoring program comments prepared by USEPA (dated April 13, 2009) and reviewed at a meeting with USEPA on April 16, 2009.
- Long-term monitoring program comments prepared by USEPA and other stakeholder agencies and dated October 2009.

1.3. Scope of Work

The LTM Work Plan was prepared to guide execution of the following tasks:

- Collection of groundwater samples from on-site monitoring wells for laboratory analysis for polychlorinated biphenyls (PCBs), semivolatile organics (SVOCs), and dioxins.
- Regular and storm event-based monitoring of the physical condition of upland areas with an engineered soil cap (*e.g.*, vegetation, integrity of cap layers), including Building 7, and repairs/maintenance, as necessary.
- Regular monitoring and maintenance of the on-site Light Non-Aqueous Phase Liquid (LNAPL) trench.
- Performance of in-situ bioaccumulation tests to derive biota sediment accumulation factors (BSAFs) and estimate invertebrate bioaccumulation potential, including sediment sample chemical analyses from the bioaccumulation test locations.
- Performance of benthic invertebrate community surveys in 2011 and 2012 so that two rounds of data will be complete prior to the 5 year review scheduled for 2013.
- Regular and storm event-based monitoring of the physical condition of the mudflat backfill and marine mattress areas and repairs/maintenance, as necessary.
- Measurement of the thickness of accumulated sediment in the mudflat backfill and marine mattress areas to evaluate the feasibility of in-situ bioaccumulation testing in these areas.
- Monitoring of potential rotation/deflection in the sheetpile retaining wall.

1.4. Work Plan Content

This Work Plan is organized into seven sections, including references and a glossary of abbreviations. A brief description of each section follows.

Section 1.0, INTRODUCTION, presents an overview of the site history, the approach used in developing the Work Plan, the scope of work, and the organization and content of the Work Plan.

Section 2.0, ENVIRONMENTAL SETTING, describes the site geology and hydrology and the components of the remedial action to be constructed at the site.

Section 3.0, WORK PLAN RATIONALE, includes an abbreviated Conceptual Site Model (CSM) for contaminant physical transport, the data needs for LTM sampling and analytical activities, and a description of how the proposed LTM activities will satisfy data needs.

Section 4.0, LONG-TERM MONITORING TASKS, briefly describes the sampling methods, sampling locations, collection methods and frequencies associated with each long-term monitoring task.

Section 5.0, DATA EVALUATION AND REQUIRED ACTIONS, summarizes the data reduction and data evaluation/decision process associated with each long-term monitoring task.

Section 6.0, GLOSSARY OF ABBREVIATIONS, provides a glossary of abbreviations and acronyms used in this Work Plan.

Section 7.0, REFERENCES, provides a list of references used to develop this Work Plan.

The Field Sampling Plan (FSP) and Quality Assurance Project Plan (QAPP) are included under separate cover.

2. Environmental Setting

2.1. Geology

The Metal Bank site is located on the western shore of the Delaware River in a heavily industrialized section of northeastern Philadelphia, Pennsylvania. According to the Pre-Design Investigation Report (Ogden and Hart Crowser, 2000), the northern portion of the upland site is located on relatively unaltered river shore deposits, in comparison to the remainder of the site. The larger southern portion of the site is located on reclaimed riverbed/mudflats and consists of artificial fill and construction debris placed on-site over time.

The Delaware River sediments area, located adjacent to the southern and western boundaries of the property, consists of mudflat and river sediment. From the combined sewer outfall along the shoreline to the south, the material consists of a coarse gravel and cobble with debris throughout. Farther from the site, the material consists of a finer sediment. The Delaware River along the southern boundary of the site consists of a gradually sloping river bottom with a gravelly and sandy material.

The Pre-Design Investigation Report listed the following strata for the upland portion of the Metal Bank site:

- Fill materials consisting of clay, silt, sand, and/or gravel, in some areas mixed with debris such as brick, concrete, wood, etc.).
- Gray silty clay encountered below the fill at elevations ranging from -4 to -10 feet National Geodetic Vertical Datum (NGVD).
- Medium dense to very dense sand and gravel unit encountered at about -16 feet NGVD.
- Weathered bedrock consisting of the Pre-Cambrian Schist of the Wissahickon Formation (not encountered in the upland borings).

For the Delaware River portions of the site, the following strata were described:

- Riprap, consisting generally of large pieces of concrete and other construction debris, was present along the side slopes and shoreline of the Metal Bank Site.
- Very soft, brown, slightly sandy, clayey silt.
- Medium dense to very dense sand and gravel encountered at about -10 to -17 feet NGVD in the mudflat areas and at -10 to -28 feet farther into the river.
- Weathered bedrock at about -33 to -37 feet NGVD in the in-river cores.

Four geologic cross-sections are presented in the Pre-Design Investigation Report (Ogden and Hart Crowser, 2000). Based on measurements collected in October 1999, groundwater flow on the upland site is generally to the southeast.

2.2. Surface Water Hydrology

The Metal Bank Site is located on the Delaware River approximately 1.5 miles downstream of the confluence of the Delaware River and Pennypack Creek, and approximately 3 miles north of Frankford Creek's confluence with the Delaware. At the site, the river is in excess of a mile wide and is up to approximately 30 feet deep. In the Philadelphia area the river is estuarine, with a tidal fluctuation in the range of 4-6 feet. The average discharge of the river over the period 1913 to 1984 was 11,700 cubic feet per second (cfs), although during prolonged drought discharge has been low as 1,180 cfs (Earth Tech, 1994).

The portions of the Metal Bank Site located in the Delaware River consist of mudflats that are periodically exposed at low tide and sediment areas that are consistently submerged and located farther to the east of the upland site shoreline. The mudflat areas are under as much as 5 to 7 feet of water at high tide (Ogden and Hart Crowser, 2000).

According to the Record of Decision (ROD), tidal monitoring was conducted during the remedial investigation to determine the influence of tidal cycles in the Delaware River on upland groundwater at the Metal Bank Site. The monitoring indicated that the diurnal tides in the Delaware River caused similar fluctuations in monitoring wells located along the shoreline of the site, although other wells presumably farther from the shoreline show limited or no tidal influence (USEPA, 1997).

2.3. Components of the Remedial Action

According to the Final Remedial Action Work Plan (TetraTech EC, 2008), the remedy to be constructed at the Metal Bank Superfund Site includes the following components that are pertinent to the LTM activities:

1. Excavation of contaminated soil hotspots and UST removal.

2. Construction of an upland soil cap and a sheetpile wall between the upland site and the Delaware River.

3. Excavation of near-shore sediments and capping of other sediment areas shown in the past to contain concentrations of total PCBs greater than 1 part per million (ppm).

The final design for the sediment remediation generally consists of the removal of the upper 2 feet (with removal of the upper 4 feet in limited areas) of contaminated sediments in the near shore, mudflat areas followed by the placement of a geotextile filter fabric overlain by a 1-foot thick layer of R-3 stone (referred to in the LTM planning documents as the mudflat backfill area). In the sub-aqueous cap areas (other areas in the Delaware River where the sediments slightly exceed the 1 ppm action level), the existing sediments

will be capped with a geotextile filter fabric overlain by marine mattresses containing 1 foot of R-3 stone (referred to in the LTM planning documents as the marine mattress areas).

During remedial construction in late 2008, the remedy was amended to include the proposed construction of a LNAPL monitoring trench, to be located to the north and west of the sheet pile wall.

The features of the remedial construction (excavation areas, LNAPL trench alignment, backfill and marine mattress areas, etc.) are shown on Figure 4-1, along with the proposed locations for the groundwater monitoring wells.

3. Work Plan Rationale

3.1. Conceptual Site Model

A Conceptual Site Model (CSM) is a description of the interaction between contaminants and the environmental media at a site. The potential pathways for transport of contaminants from the Metal Bank site are identified below and discussed with regard to associated components of the remedy and the planned LTM activities.

3.1.1. Migration of Contaminants within Surface Run-off

During storm events, soil contaminants may become solubilized in stormwater and contaminated soil particles may be entrained in surface run-off and transported via preferential run-off routes. This contaminant transport pathway will be controlled by the installation of a soil cap and the sheet pile wall at the Metal Bank site. The integrity and function of the soil cap will be monitored during the LTM period through visual surveys of cap condition at routine intervals and following 25-year storm events.

3.1.2. Migration of Contaminants from Groundwater to Surface Water and the Soil Cap

Contaminated groundwater and LNAPL may migrate through the subsurface aquifer and may discharge to the Delaware River via the transition zone. Removal of contaminated soils and the installation of the LNAPL trench will mitigate migration of contaminated groundwater. The potential presence and migration of groundwater contamination during the LTM period will be monitored via the collection and analysis of groundwater samples from 6 on-site monitoring wells at regular intervals and monitoring of the LNAPL monitoring trench.

Groundwater elevations in the LNAPL trench sumps and monitoring wells will be checked after a significant rainfall amount of 4-inches over a period of 24 hours or after a 100 year flood event. If groundwater elevation exceeds the elevation of the soil cap (11 feet MSL), soil samples will be collected and analyzed for PCBs by Arochlor, to check for the potential migration of LNAPL upward into the soil cap.

3.1.3. Migration of Contaminants within Surface Water and Sediments

Migration of contaminants in a surface water body generally occurs via transport of contaminated sediment and transport of dissolved contaminants. Physical processes that impact sediment transport include erosion/resuspension, deposition, and bioturbation. Following removal of contaminated sediment from the near shore/mudflat area, geotextiles and backfill stone or marine mattresses will be placed in the Delaware River to minimize sediment erosion/resuspension and direct contact by biota. Following placement of the backfill and marine mattresses, new sediment from outside the remediated areas may deposit and accumulate in various areas at the site. In-situ

bioaccumulation tests will be conducted during the LTM period to measure concentrations of contaminants of concern and to determine site-specific BSAFs. Geophysical data and site observations will be collected to document the physical integrity of the backfill and marine mattress areas during the LTM period.

3.2. Data Planning Process

The Metal Bank Long-term Monitoring program was designed to collect data of the right type, quantity, and quality of data needed to reach defensible decisions.

This planning process is to ensure that the quality of data for particular field activities are acceptable for the intended use of the data and also ensure precision, accuracy, reproducibility, comparability, and completeness. This process is discussed further in the FSP (Attachment 1) and QAPP.

The FSP and the QAPP outline the detailed sampling and analytical procedures for each medium to be sampled, the number and type of each sample and the Quality Assurance/Quality Control (QA/QC) sample requirements for each medium. The QAPP identifies precision, accuracy and completeness goals used in selecting the sampling and analysis methods. The FSP contains details of field activities, such as Standard Operating Procedures (SOPs) for the collection of groundwater and sediment samples. These documents are submitted under separate cover from this Work Plan.

4. Long-Term Monitoring Tasks

4.1. Overview

This section summarizes field tasks required to support the LTM data collection scope of work described in Section 1.3. More detailed information regarding the field tasks can be found in the FSP and QAPP (provided under separate cover). Table 4-1 summarizes the LTM tasks and timeframes.

4.2. Upland Cap Monitoring

Quarterly visual surveys of the upland cap area will be conducted to investigate for indications of settlement, cracks/fissures, erosion, seeps and/or other conditions that would compromise the physical integrity of the cap. The observations will be photo-documented and recorded on field recordkeeping forms. Annual elevation surveys of the upland cap will be conducted to check cap thickness. In addition to the regular, quarterly surveys, additional surveys will be conducted after each 25-year storm event. The post-storm surveys will follow the same procedures and collect the same data as required for the regular, quarterly surveys. The upland cap monitoring activities will continue until the cleanup standards are met or USEPA otherwise determines that monitoring is no longer required.

During the first two years following cap construction, the condition of the vegetative layer of the cap will be assessed twice per year during late spring and late summer. In the third year and thereafter, the cap vegetation will be assessed annually at mid-summer. During each evaluation, the percentage of vegetative cover and the percentage of non-native, invasive vegetation (if found) will be determined at ten randomly selected locations on the cap. During the visual surveys, areas that are outside of the randomly selected locations with no or limited vegetation or invasive vegetation will also be identified. Actions to remedy the noted condition will be implemented.

If damage to the cap is identified, survival of cap vegetation drops below 80%, and/or invasive vegetation is identified at 10% or greater, a cap maintenance/repair event will be scheduled with appropriate advance notice to USEPA. The cap maintenance/repair effort will incorporate, as appropriate, activities identified in the Operations and Maintenance Plan and Institutional Controls Plan from the Revised Design Report (AMEC, 2007). Following implementation of the cap repairs, appropriate documentation will be submitted to USEPA.

Included in the upland cap inspection will be inspections of Building 7. The epoxy coat and repairs to Building 7 epoxy coating will be inspected once a year for duration of 5 years until clean-up standards are met or USEPA otherwise determines that monitoring is

no longer required. At the end of the initial 5 years of the LTM period, the operation and maintenance program will be re-evaluated. Any exposed concrete in an area exceeding 10 square centimeters will be recoated with epoxy. The aerial extent of exposed concrete (100 cm2) is based on standard wipe test methods for spills of PCBs on solid surfaces and clean-up standards that are based on concentration per area as identified in the Toxic Substances Control Act (TSCA) 40 CFR 761.125.

4.3. Groundwater Monitoring

Groundwater samples will be collected from 6 on-site monitoring wells for laboratory analysis until clean-up standards are met or USEPA otherwise determines that monitoring is no longer required. After the initial 5 years of groundwater monitoring, the collected data will be evaluated by plotting the data on a concentration verses time graph to observe increasing or decreasing trends. Table 4-2 summarizes the required analytical parameters and monitoring frequency for the initial 5 years of the LTM period. It is anticipated that USEPA will request split samples during each groundwater sampling event for additional analyses, such as inorganics. Groundwater sampling procedures are described in the FSP and QAPP.

4.4. LNAPL Trench Monitoring

The LNAPL trench will be monitored on a biweekly basis for the first quarter following remedial construction and on a quarterly basis thereafter for indications of free product until clean-up standards are met or USEPA otherwise determines that monitoring is no longer required. The monitoring will be conducted by visual observation for sheens or product layers (including use of a clear bailer, as necessary) and by lowering a groundwater/product interface probe through each manhole constructed for the trench and recording the thickness of the free product layer, if encountered. As discussed in the Operations and Maintenance Plan and Institutional Controls Plan (AMEC, 2007) and the Final Remedial Action Work Plan, sorbent booms will be placed in the trench/sumps if some oil is present. The absorbent booms will be inspected for saturation (visual observations of staining) and will be replaced, if saturated, during the following quarterly monitoring event. If oil is encountered consistently and the booms become saturated, other action may be taken to actively pump product from the LNAPL trench.

Table 4-2
Groundwater Monitoring Frequency and Analytical Parameters

Year	Parameter and Analytical Method	Frequency
Years 1 and 2	PCB Aroclors (EPA 8082A)	Quarterly
Years 1 and 2	SVOCs (EPA 8270D) Dioxins (EPA 1613) PCB Congeners (EPA 1668A)	Semi-annually

Year 3	PCB Aroclors PCB Congeners SVOCs Dioxins	Semi-annually
Years 4 and 5	PCB Aroclors PCB Congeners SVOCs Dioxins	Annually

4.5. In-situ Bioaccumulation Testing, Sediment Analysis, and Benthic Community Survey

A bioaccumulation study will be conducted annually in 2011 and 2012 to allow determination of BSAFs and potential benthic invertebrate bioaccumulation in the Metal Bank mudflat area prior to the first 5 year review. The following available methods have been identified to support calculation of BSAFs:

- **Laboratory Bioaccumulation Studies**. Some researchers feel that laboratory bioaccumulation testing is the best and most reliable method to evaluate specific sediments (Lee, 1998; USEPA, 2002). For this type of study, sediment samples are collected from the site and transported to a laboratory, where test organisms from the laboratory are added to the sediment for a specified duration. A subsample of the test organisms is analyzed for pollutant and lipid content before test initiation. Sediment samples are analyzed for chemical and physical characteristics immediately after sample collection. At end of the test period (typically 28 days), the sediment sample and lab organisms are separately analyzed for contaminants, and in the case of sediments, for select physical characteristics to allow BSAF calculation.
- **Caged Biota Studies**. Test cells can be constructed in sediment areas proximal to the backfill areas (unless adequate sediment accumulates atop these areas) and laboratory organisms placed into the test cells. If non-indigenous species are used, prior permission may be required from state agencies. At the end of deployment, the sediment and test organisms are collected for analysis. Disadvantages include the potential for test cells to become lost, damaged or vandalized during the test period. USEPA previously deployed test cells containing *Lumbriculus variegatus* at the Metal Bank site and the results are available for comparison to LTM data.
- **Collection of Sediment and Biota from Site**. Grab samples of sediment and biota can be collected from the site for separation and paired analyses to support BSAF preparation. There are difficulties, however, after sieving the biota from the sediment, in identifying an appropriate species for analysis to avoid confounding factors. Many indigenous organisms do not meet the criteria for use in bioaccumulation tests. Both field identification and sample mass issues could be troublesome. Additionally, factors such as reproductive status of individual

field collected organisms can significantly affect bioaccumulation, and may be hard to determine. Test specimens should ideally be similar in age, sex and size.

Based on the availability of caged biota data from pre-remediation studies, BSAFs will be calculated via the performance of 4 in-situ caged worm deployments in the mudflat at the Metal Bank site (refer to Figure 4-1) and at two reference site locations (refer to Figure 4-2) for in-situ bioaccumulation testing. Bioaccumulation testing will commence within one year of the completion of remedial action, and be conducted annually for a period of two years. Additional possible testing locations will be considered after the first year of testing, based on potential sediment accumulation in the backfill and marine mattress areas (refer to Section 4.7 below).

Sediment samples will be collected for chemical analysis (including PCB congeners) at each of the bioaccumulation testing locations, during each annual monitoring event.

Benthic invertebrate community surveys will be conducted in 2011 and 2012. Benthic samples will be collected at four mudflat and two reference locations. Benthic macroinvertebrates in each sample will be identified to the lowest practical level. The benthic macroinvertebrate community, as observed in the four mudflat samples, will be compared to that observed in the two reference samples in terms of parameters such as community diversity, abundance and the number of pollutant tolerant species present.

4.6. Subaqueous Cap Integrity Verification and Bathymetric Surveys

Bathymetric and elevation surveys in conjunction with divers will be used to document the physical integrity of the backfill and marine mattress locations. Where appropriate, the backfill areas will be physically documented (via elevation survey) and observed at low tide. Divers working with the land surveyors will be used to survey the deep water locations. These surveys will be conducted until clean-up standards are met or USEPA otherwise determines that monitoring is no longer required, and will initially consist of an annual elevation survey using divers to characterize sediment texture in the sub-aqueous cap area and a bathymetric or elevation survey to investigate the elevation of the cap materials and adjacent sediments. The divers working with the land surveyors will provide a report on the sediment texture that can be used to delineate sediment grain size boundaries, areas of erosion and deposition, and benthic habitat characteristics. Confirmatory shallow sediment samples will be collected as necessary to aid in interpretation of the diver's report. After the initial 5 years of the LTM period, the frequency of the elevation and bathymetric surveys may be reduced.

Following a 25-year storm, a visual survey will be conducted at low tide to evaluate whether potential damage to the backfill or marine mattress areas requires repair. If damage to the backfill or marine mattress areas is observed during regular or storm event-related surveys, maintenance/repairs in accordance with a backfill/marine mattress maintenance plan (to be submitted under separate cover) will be implemented with

appropriate advance notice to USEPA. Following completion of the maintenance/repair activities, appropriate documentation will be submitted to USEPA.

The proposed survey area coincides with the mudflat backfill and marine mattress areas shown in Figure 4-1.

4.7. Sediment Accumulation Monitoring

It is not known whether sediments will accumulate in the backfill and marine mattress areas following cap construction. While some of the capped areas in the mudflats may exhibit depositional characteristics, the marine mattress areas may not accumulate significant sediment due to the flow velocities in the Delaware River. To evaluate the feasibility of conducting additional in-situ bioaccumulation tests in the backfill and marine mattress areas during the LTM period, the thickness of accumulated sediments will be measured on an annual basis in the backfill and marine mattress areas. If an adequate thickness of recently deposited sediments (greater than 12 inches) is encountered in the backfill and marine mattress areas, a recommendation regarding a potential expansion of the in-situ bioaccumulation testing (beyond what is identified in Section 4.5 of this document) will be submitted to USEPA. At least 12 inches of sediment is required for secure placement of the bioaccumulation test chambers, which will be deployed horizontally at each location within a secure wire basket.

4.8. Sheetpile Retaining Wall Monitoring

Monitoring of the retaining wall for rotation will be undertaken for a period of at least two years. Tiltmeters will be installed at three locations on the upland side of the wall (one tiltmeter in each zone). At the time of installation, the tilt sensors will be adjusted to the null position. Tiltmeters will be monitored monthly for the first six months followed by quarterly (four times per year) for the balance of two years. If the rotation of the wall is determined to be less than two degrees after two years, no further monitoring will be conducted. If the rotation of the wall is determined to be greater than two degrees (after any period of time following commencement of monitoring), then the monitoring will continue and the design engineer will be contacted for corrective measures that may be necessary to halt the rotation. Monitoring will continue until the rotation has been determined to have ceased for a period of three consecutive quarters. Monitoring of the sheetpile wall will also include ongoing visual inspection and repairs of the epoxy coating until clean-up standards are met or USEPA otherwise determines that monitoring is no longer required. Data will be appropriately recorded in the site log book.

5. Data Evaluation and Required Actions

5.1. Data Validation

Analytical data generated by the LTM program will be validated in accordance with the USEPA National Functional Guidelines, as further described in the QAPP.

5.2. Data Evaluation

Procedures to be used for evaluation of the LTM groundwater and sediment data are described in the FSP. In general, statistical analyses will be used to evaluate groundwater data. In-situ bioaccumulation test data will be compared to results from prior studies and background locations. Professional judgment and direct observation will be used to evaluate the condition of the upland cap, backfill area, and marine mattress areas.

5.3. Decision Trees and Required Actions

LTM observations and data evaluations may require action such as cap repairs, contingency monitoring, and/or additional environmental investigations. Decision trees for required action during the LTM period are provided as Figures 5-1 through 5-6.

6. Glossary of Abbreviations

BAZ	Biologically Active Zone
BSAF	Biota-Sediment Accumulation Factor
cfs	cubic feet per second
CSM	Conceptual Site Model
DQO	Data Quality Objective
FSP	Field Sampling Plan
LNAPL	Light Non-Aqueous Phase Liquid
LTM	Long Term Monitoring
NGVD	National Geodetic Vertical Datum
PCBs	Polychlorinated Biphenyls
ppm	part per million
QA	Quality Assurance
QAPP	Quality Assurance Project Plan
QC	Quality Control
ROD	Record of Decision
SOP	Standard Operating Procedure
SVOC	Semivolatile Organic Compound
USEPA	United States Environmental Protection Agency
UST	Underground Storage Tank
WP	Work Plan

7. References

Revised Remedial Plan for the Metal Bank Superfund Site. June 29, 2004.

AMEC Earth and Environmental, 2007. Revised Design Report, Metal Bank NPL Site, Philadelphia, Pennsylvania. November 9, 2007.

Earth Tech, 1994. Final Remedial Investigation for the Metal Bank/Cottman Avenue NPL Site, Philadelphia, Pennsylvania. October 14, 1994.

Lee II, H. et al., 1998. Methods for Assessing Sediment Bioaccumulation in Marine/Estuarine Benthic Organisms. National Sediment Bioaccumulation Conference.

Ogden Environmental and Energy Services Co., Inc. and Hart Crowser, Inc., 2000. Pre-Design Investigation Report, Metal Bank NPL Site, Philadelphia, PA. January 21, 2000.

TetraTech EC, Inc., 2007. Final Remedial Action Work Plan, Metal Bank NPL Site Remediation Project, Milnor Street and Cottman Avenue, Philadelphia, PA. November 9, 2007.

USEPA, 1997. Superfund Record of Decision: Metal Banks, EPA ID PAD046557096, OU 1, Philadelphia, Pennsylvania. December 31, 1997.

USEPA, 2002. A Guidance Manual to Support the Assessment of Contaminated Sediments in Freshwater Ecosystems. Volume II - Design and Implementation of Sediment Quality Investigations. EPA-905-B02-001-B.

TABLE 4-1 LONG TERM MONITORING TASK SUMMARY, METAL BANK SITE, PHILADELPHIA, PA

Task	2010	2011	2012	2013	2014	Subsequent Years	Comments
Upland Cap Monitoring							
a Mowing	Annually in late spring	Annually in late spring	Annually in late spring	None	None	Annually in spring every 3-4 years until cleanup standards are met or USEPA otherwise determines that monitoring is no longer required	Mower blade to be set to 8-10 inches above ground
b Condition Surveys	Quarterly	Quarterly	Quarterly	Quarterly	Quarterly	Quarterly through until cleanup standards are met or USEPA otherwise determines that monitoring is no longer required	Surveys of entire cap for cracks/fissures, erosion, seeps, settlement, ponding or other conditions that would compromise cap physical integrity
c Vegetation Surveys	Annually in Mid-June	Annually in Mid-June	Annually in Mid-June	Annually in Mid-June	Annually in Mid-June	Annually in Mid-June until cleanup standards are met or USEPA otherwise determines that monitoring is no longer required	Survey of vegetative cover and invasive species at 10 randomly selected locations, observation of other areas
d Elevation Surveys	Annually	Annually	Annually	Annually	Annually	Annually until cleanup standards are met or USEPA otherwise determines that monitoring is no longer required	Elevation survey data to be used to confirm cap thickness
e Storm Event Surveys	As needed	As needed	As needed	As needed	As needed	As needed until cleanup standards are met or USEPA otherwise determines that monitoring is no longer required	Within one month after a 25-year storm event
f Building 7	Annually in Spring or Fall	Annually in Spring or Fall	Annually in Spring or Fall	Annually in Spring or Fall	Annually in Spring or Fall	As needed until cleanup standards are met or USEPA otherwise determines that monitoring is no longer required	Inspect epoxy coating for cracks and exposed concrete greater than one square inch
Groundwater Monitoring	Quarterly	Quarterly	Semi-annually	Semi-annually	Annually	TBD	Recommendations for additional groundwater monitoring will be based on the Mann-Whitney U Test results from initial 13 rounds
LNAPL Trench Monitoring	Biweekly for first quarter, quarterly thereafter	Quarterly	Quarterly	Quarterly	Quarterly	Quarterly until cleanup standards are met or USEPA otherwise determines that monitoring is no longer required	Deployment of absorbent booms will be the initial response to presence of free product in LNAPL trench
In-situ Bioaccumulation Testing							
a Caged Worm Studies	One study event during summer	One study event during summer	TBD	TBD	TBD	TBD	If each bioaccumulation testing location on-site yields a BSAF that is lower than the prior study on-site and/or comparable to background for two consecutive annual events, the sampling will be halted
b Surface Sediment Sampling	Concurrent with caged worm study	Concurrent with caged worm study	TBD	TBD	TBD	TBD	See above
c Benthic Community Survey	None	One survey event	One survey event	None	None	None	Two events will be conducted to provide supplemental data to EPA for 5-year review process
Backfill and Marine Mattress Monitoring							
a Diver Assisted Elevation Survey	Annually	Annually	Annually	Annually	Annually	Annually until cleanup standards are met or USEPA otherwise determines that monitoring is no longer required	
b Elevation/Bathymetric Survey	Annually	Annually	Annually	Annually	Annually	Annually until cleanup standards are met or USEPA otherwise determines that monitoring is no longer required	Intertidal backfill areas will be physically surveyed at low tide, bathymetric survey in other areas
c Storm or Anthropogenic Event Survey	As needed	As needed	As needed	As needed	As needed	As needed until cleanup standards are met or USEPA otherwise determines that monitoring is no longer required	Within one month after a 25-year storm event or an anthropogenic event with the potential to damage backfill or marine mattress structures, such as a ship running aground in the marine mattress area
Sheetpile Wall Monitoring	Monthly for six months, quarterly thereafter	Quarterly	TBD	TBD	TBD	TBD	If rotation is less than 2 degrees during first two years, monitoring will cease Otherwise, monitoring will continue until rotation has ceased for 3 consecutive quarters

Notes
TBD = To Be Determined

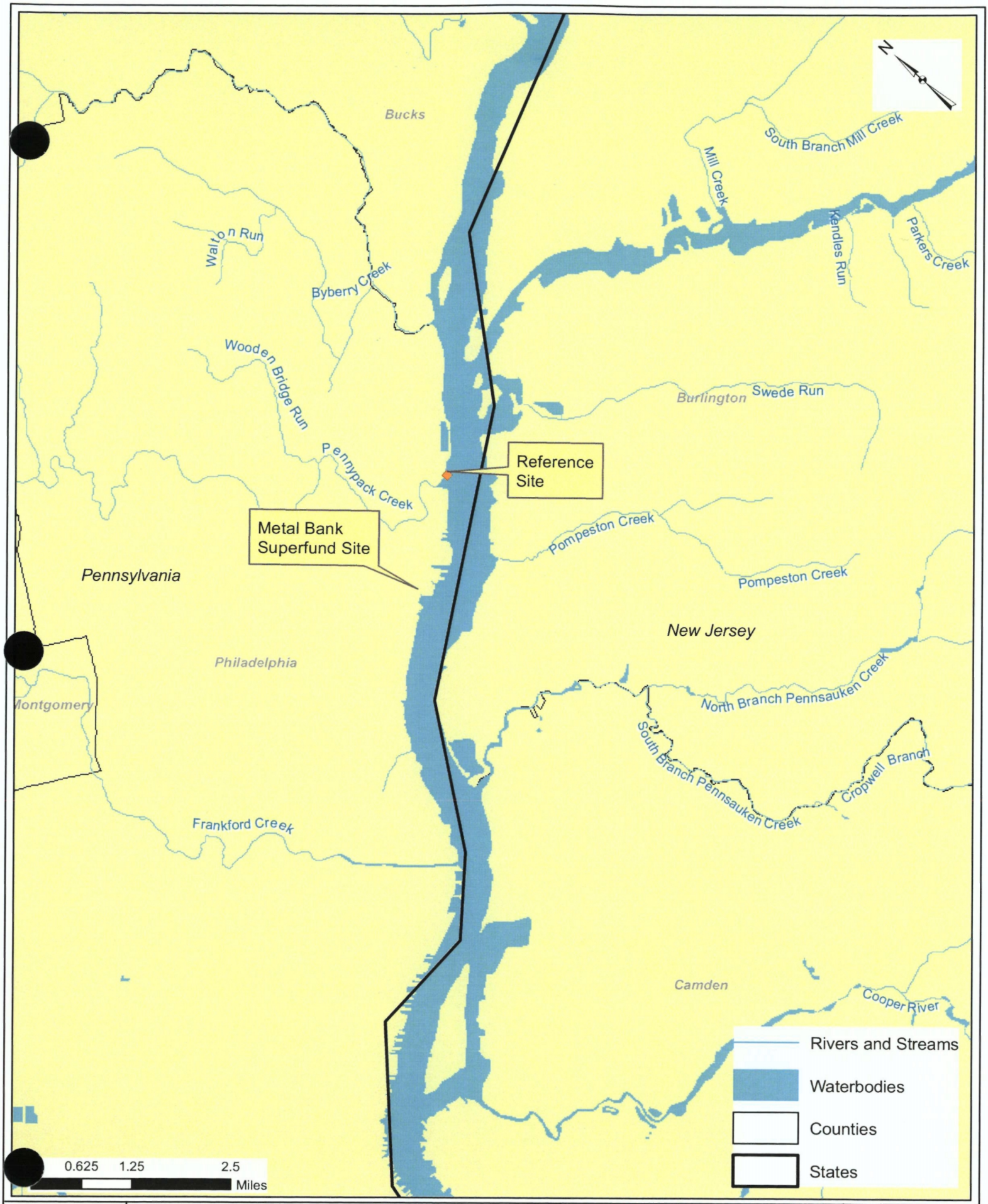

MALCOLM PIRNIE

Metal Bank Superfund Site
Site Location Map

Figure 1-1

November 2009

GROUNDWATER MONITORING WELLS		
ID	X	Y
GW1	2730543 8516	262719 2239
GW2	2730838 0299	262906 8981
GW3	2730721 0514	262391 7063
GW4	2730876 6601	262183 9852
GW5	2731000 9321	262319 0302
GW6	2731240 0605	262324 6254

EXCAVATION LIMITS		
AREA	VOLUME (cubic yds)	RE-SURVEY DATE
CY-2	1,288	7/17/08
SA-2	1088 0000	9/15/2008
SA-3	856	9/5/2008
SA-4/5	11184 0000	12/17/2008

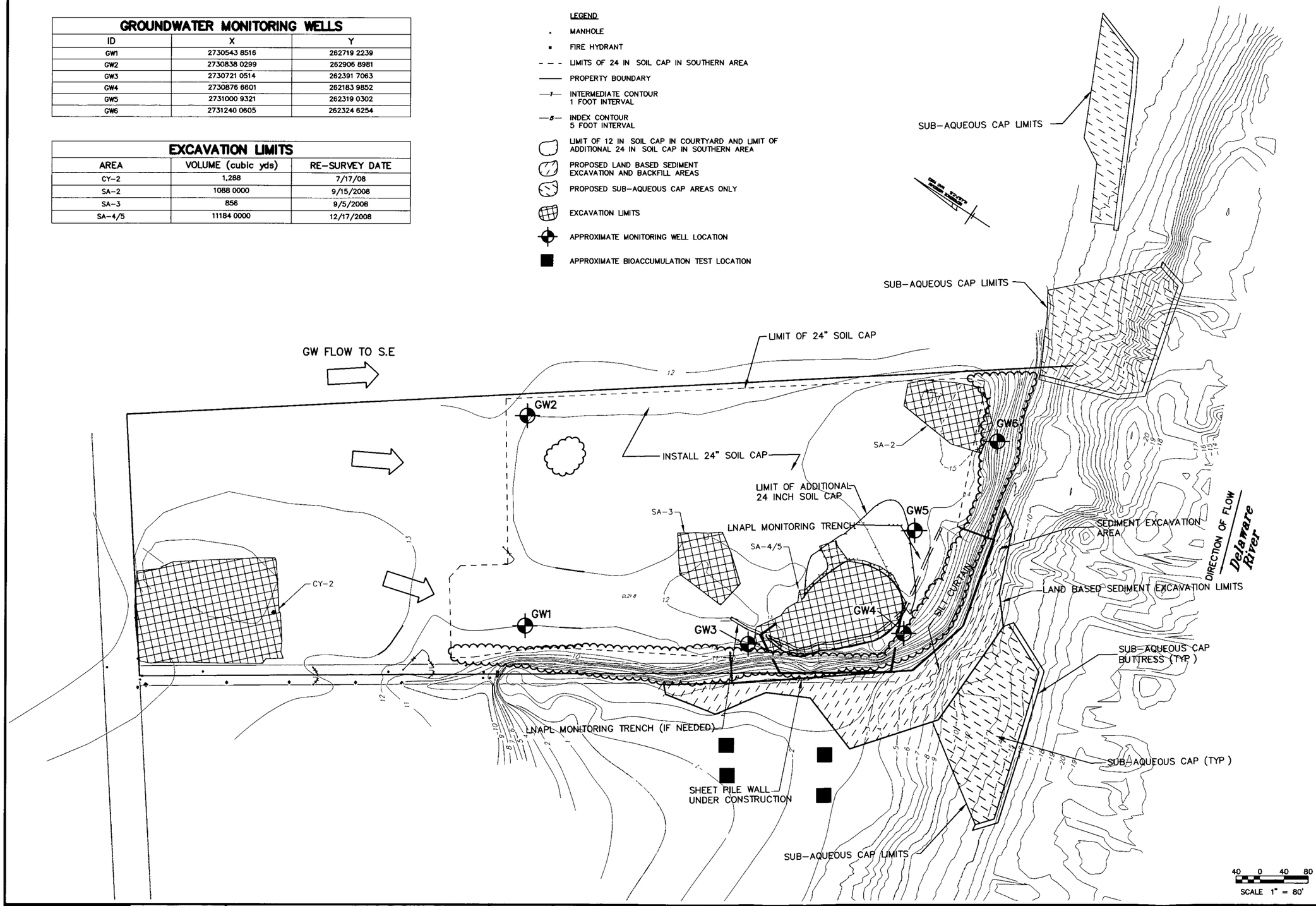

NOTE:

1 APPROXIMATE GW FLOW DIRECTION TO SE (REF REPORT)

FIGURE 4-1

MALCOLM PIRNIE

REVISIONS			
NO.	BY	DATE	REMARKS

DES
DWN MVT
CKD LW

COTTMAN AVENUE PRP GROUP
PHILADELPHIA, PA

LONG-TERM MONITORING PLAN

METAL BANK SUPERFUND SITE

ON-SITE MONITORING LOCATIONS

COPYRIGHT © 2009 MALCOLM PIRNIE, INC

DATE NOVEMBER 2009

SHEET ___ OF ___

CAD REF NO ___

XREFS I \ACAD\PROJ\3809009\XREF\LGA bathymetry 8-27-08.dwg IMAGES None
User torresm Spec PIRNIE S File I \ACAD\PROJ\3809009\dwg\ON-SITE MONITORING LOCATIONS2-FEB2010.DWG Scale 1:1 Date 02/25/2010 Time 12 04 34

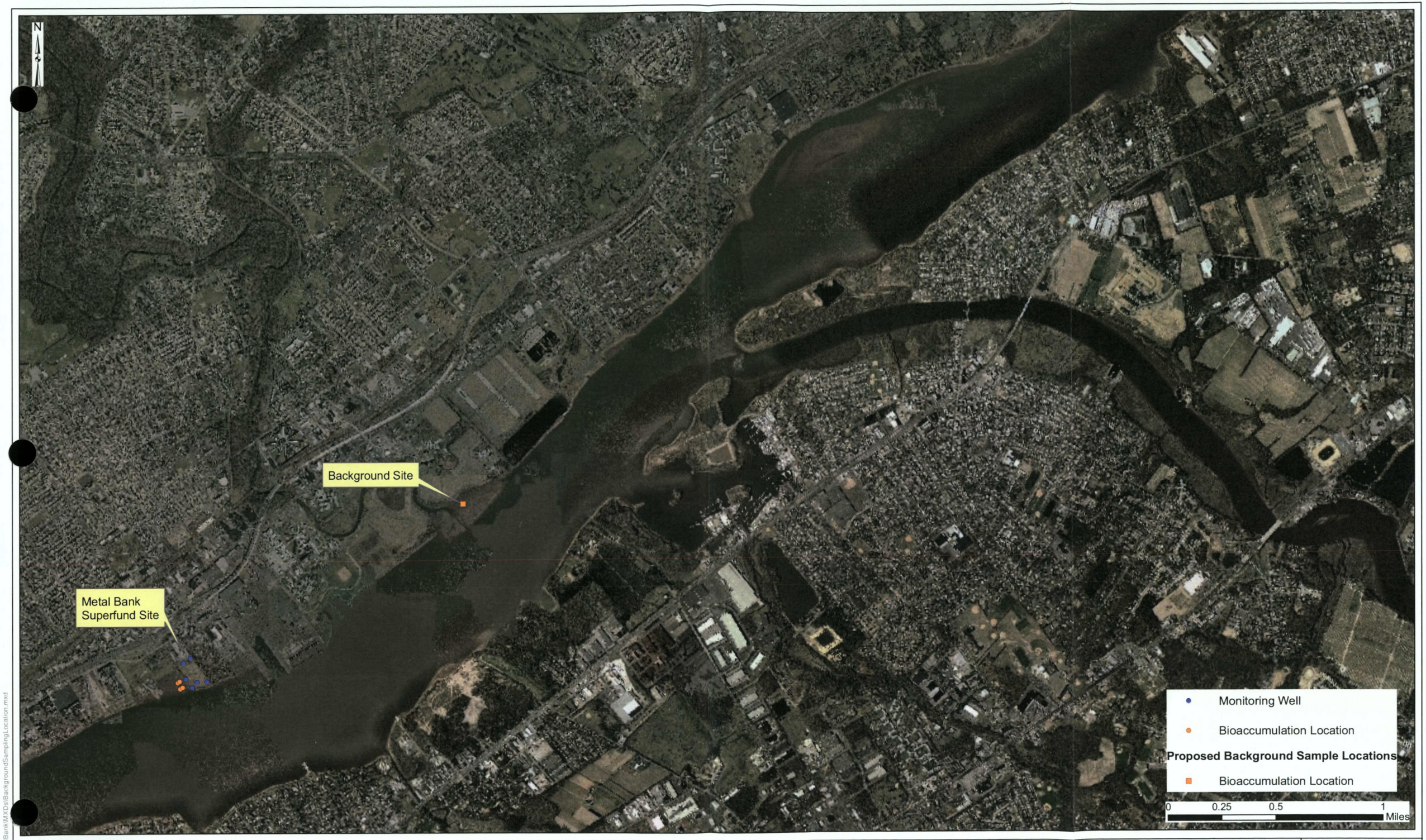

MALCOLM PIRNIE

Cottman Avenue PRP Group
Metal Bank Site
Long Term Monitoring Plan

Metal Bank Superfund Site
Background Sampling Location

Figure 4-2

August 2009

S:\Holding\chitra\MetalBank\MXDs\BackgroundSamplingLocation.mxd

Figure 5-1
Decision Tree for Upland Cap Monitoring
Metal Bank Superfund Site, Philadelphia, PA

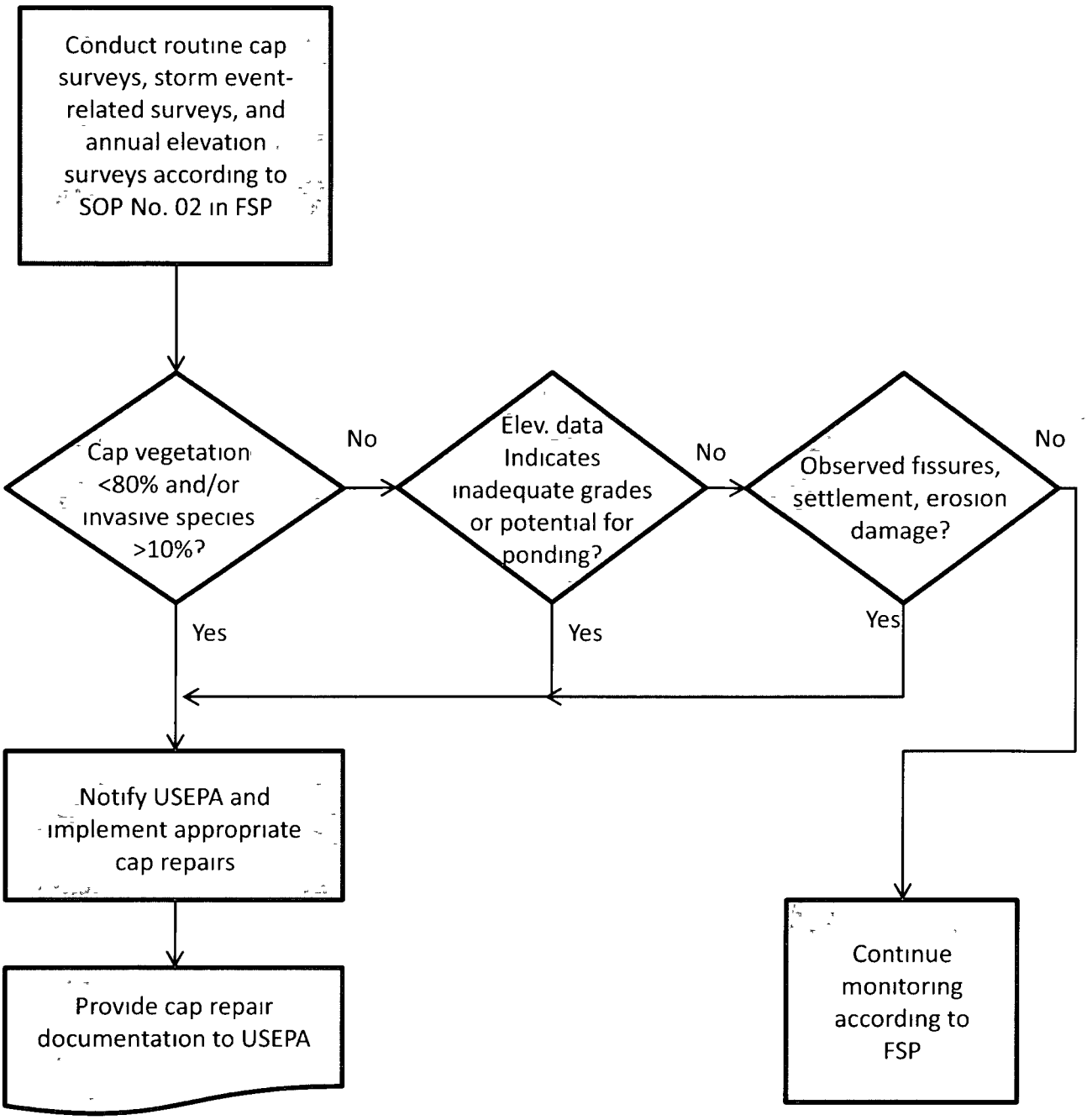

Note All upland cap features (access roads, fences, monitoring well network, LNAPL trench, soil cap structure, cap vegetation, etc) must be evaluated prior to initiating action/repairs, and if damage is noted, corrective action must address each observed deficiency.

Figure 5-2
Decision Tree for Groundwater Monitoring
Metal Bank Superfund Site, Philadelphia, PA

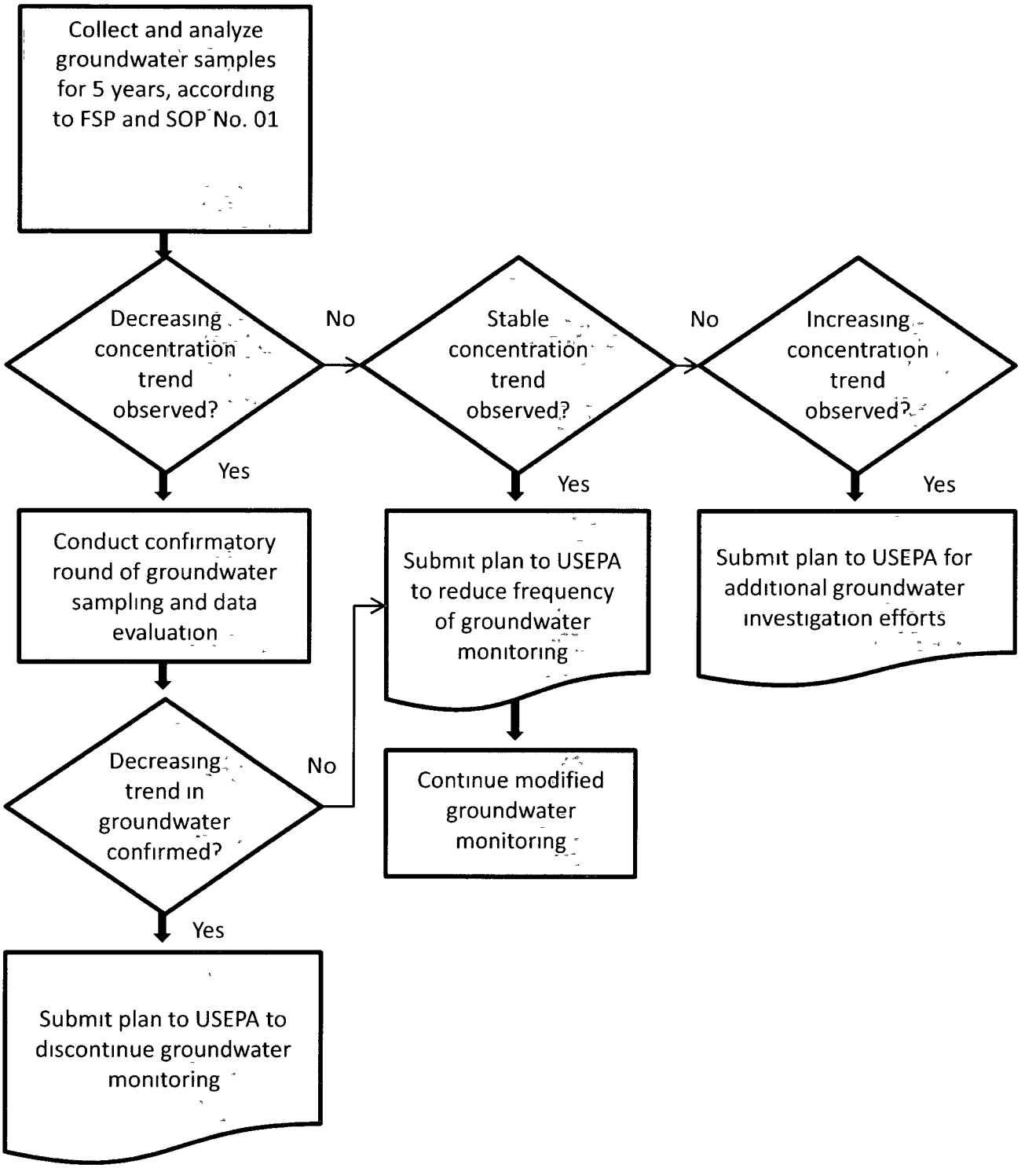

Figure 5-3
Decision Tree for LNAPL Trench Monitoring
Metal Bank Superfund Site, Philadelphia, PA

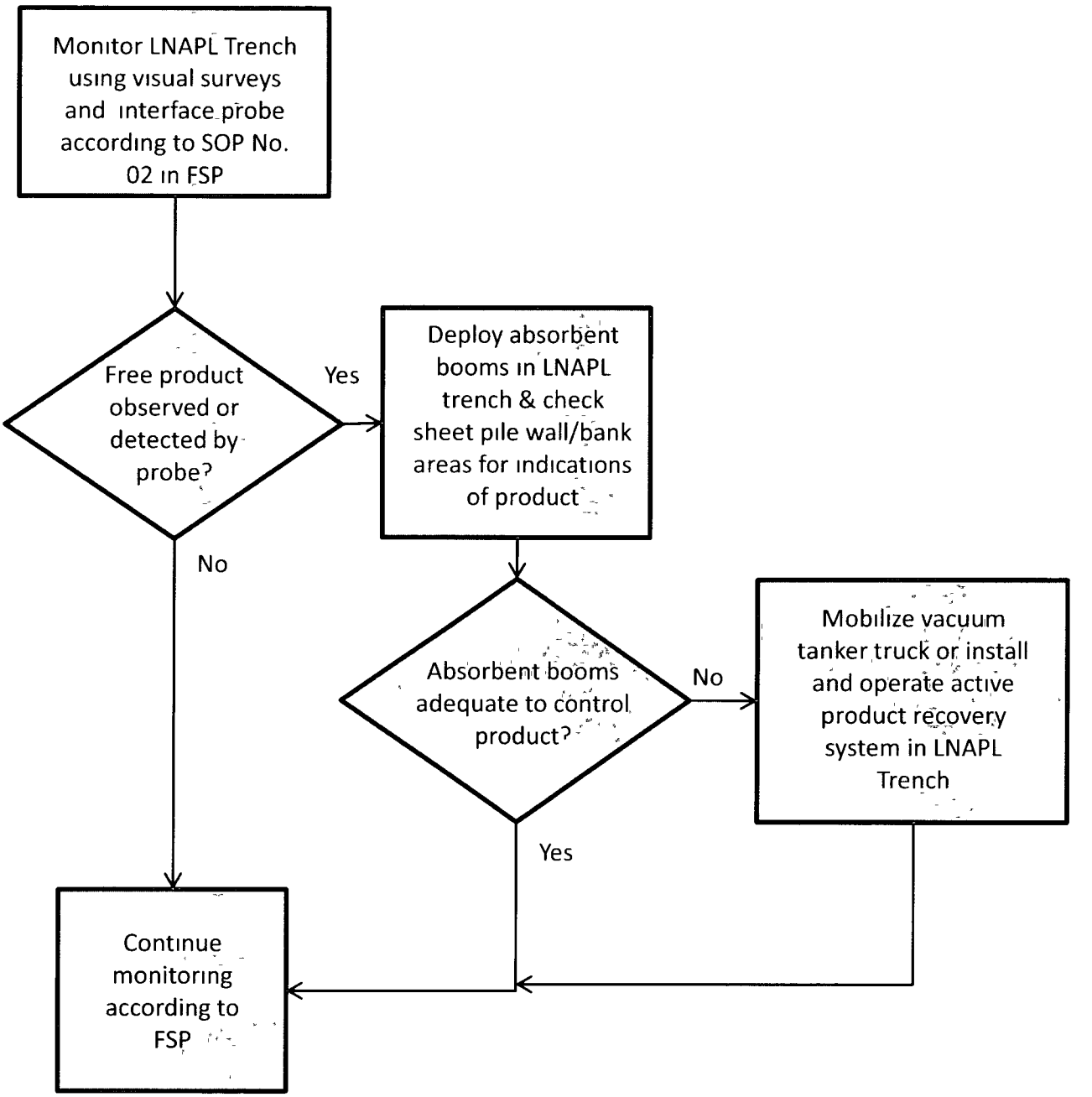

Figure 5-4
Decision Tree for Backfill Area/Marine Mattress Monitoring
Metal Bank Superfund Site, Philadelphia, PA

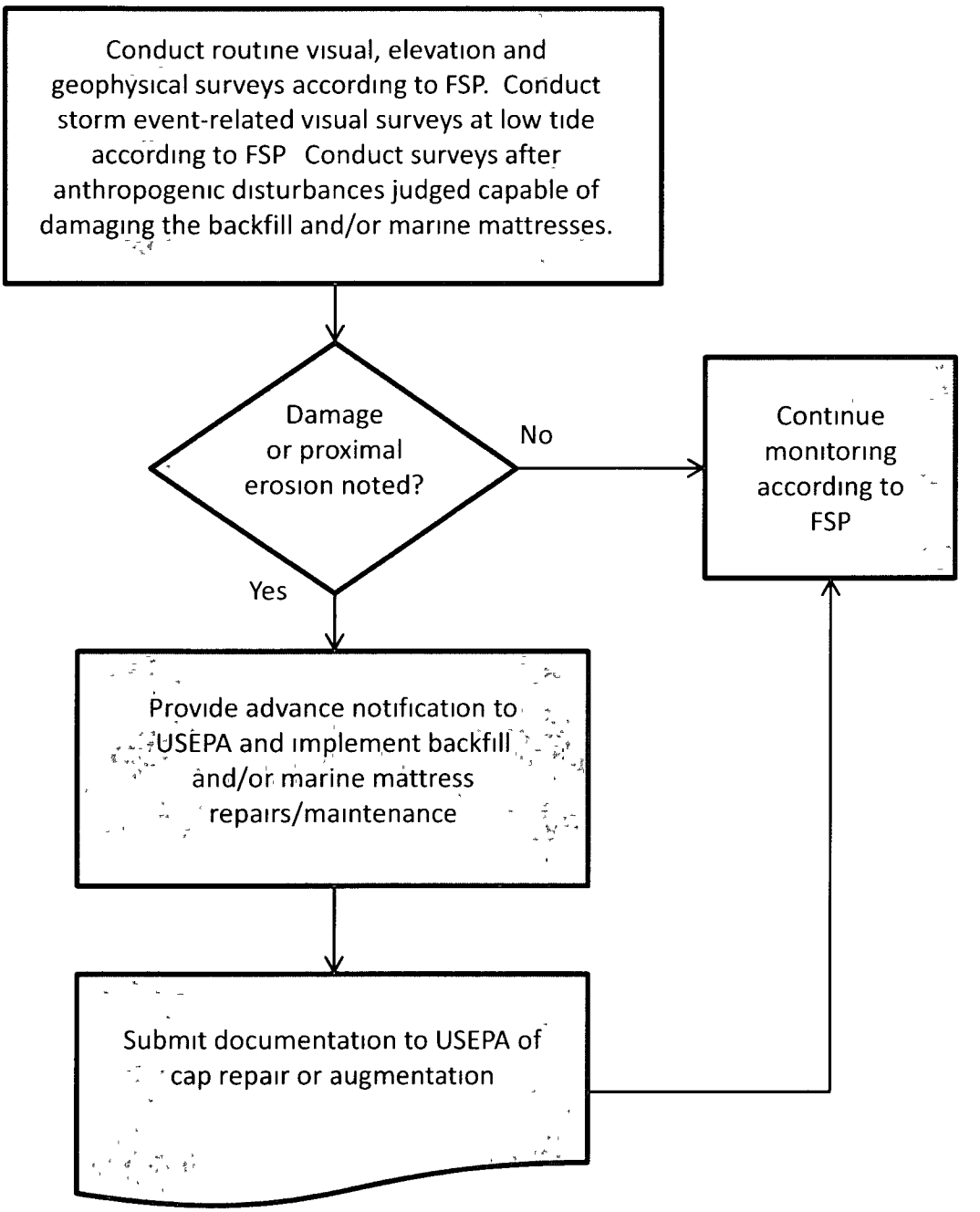

Attachment 3

Field Modification Form

FIELD MODIFICATION FORM
FOR
METAL BANK NPL SITE
MALCOLM PIRNIE, INC.

Date:

Document:

Activity:

Requested Modification:

Rationale:

Attachments:

Malcolm Pirnie Project Manager: _____

Malcolm Pirnie Deputy Project Manager _____

Malcolm Pirnie Project Quality Control Officer _____

Attachment 4

Long Term Monitoring Plan Meeting Minutes from August 6, 2008

MALCOLM PIRNIE

Correspondence

Date: October 14, 2008

To: Sharon Fang, USEPA

Copy: Refer to Distribution

From: Len Warner, MPI

Re: Metal Bank Long Term Monitoring Plan Meeting

This memo summarizes discussions regarding the Long Term Monitoring (LTM) plan outline for the Metal Bank site during the on-site meeting on 6 August 2008. The following participants attended or joined via teleconference:

Mark Conaron, PADEP
John Dobi, PSEG Services Corporation
Sharon Fang, USEPA
Ray Lees, Malcolm Pirnie
Bruce Pluta, USEPA
Paul Schroeder, USACE
Len Warner, Malcolm Pirnie
John Yagecic, Delaware River Basin Commission

1. Sharon Fang noted at the start of the meeting that she had collated and distributed agency comments on the LTM outline prepared by Malcolm Pirnie, Inc. and dated 14 July 2008. The comments were distributed electronically by EPA on 6 August 2008.
2. Ray Lees introduced the meeting and noted that the intent was to review the July 14, 2008 LTM Approach Outline and EPA's comments (dated August 6, 2008) to explore stakeholder objectives. Len Warner noted that the LTM Approach Outline was prepared based on the content of the 29 June 2004 Revised Remedial Plan and the minutes of the 13 February 2008 conference call between EPA and the Group that discussed potential sampling requirements for the sub-aqueous cap area. Len noted that the LTM outline was intended to broadly identify the components of the remedy and the specific performance characteristics of the remedy that could be measured after remedial construction, with the intent of stimulating discussion on the LTM scope.
3. Bruce Pluta stated that EPA's objective for the LTM is to develop a monitoring scope and decision tree that will ultimately yield adequate data to support the EPA 5-year review for the site. The big picture item is the need to document adequate risk reduction. Bruce also noted that detection limits and analytical sensitivity would be areas of focus for EPA's review of the LTM. Ray agreed that EPA's first general comment in their memo dated 6 August 2008, which requested inclusion of action levels and decision trees in the LTM, would be discussed.

4. The second part of EPA's general comment, regarding confirmatory sampling, was discussed. Sharon and Ray explained to the comment author, Dawn Ioven, that the Remedial Action Plan addressed verification sampling separately from the LTM, and that while verification sampling was required for some areas in the upland portion of the Site, at other areas remediation would be based solely on specified excavation depths and limits. Mark Conaron of PADEP asked what type of action would be taken if free product or stained soil was observed in the sidewalls of upland excavations where removal is to be conducted. Sharon pointed out that the Consent Decree described hotspot removal and specific limits of excavation, which would not be changed. Sharon noted that EPA was aware that contamination would remain on-site and would be addressed by isolation caps and institutional controls. It was agreed that the verification sampling would not be included in the LTM.
5. Paul Schroeder of USACE asked if there would be construction monitoring to determine whether dredging residuals or in-situ sediments were displaced/re-suspended during placement of the cap components, so that appropriate steps could be taken to monitor areas where they might resettle. Len replied that dredging residuals would likely be a very thin layer with a small overall mass (and therefore a minimal contaminant mass). Len expected that the geotextile placed under the loose stone or stone mattresses could be expected to robustly contain and isolate residuals.
6. Regarding the first EPA comment under the heading "Upland Portion of the Site" in the 6 Aug 2008 memo, Sharon and Bruce requested that the LTM for the upland areas address monitoring of revegetation of the site and control of potential invasive species. Ray responded that the design spec is very robust and this type of long term monitoring is not required by the June 2004 document. Ray continued that the construction contractor will most likely be planting in the 2009 season and will be responsible to monitor survival performance (maintenance) in accordance to the specification. Ray also noted that the seed mix was selected based on previous discussion with EPA during the finalization of the Revised Design, to address invasive species. Bruce responded that there is an Executive Order that requires EPA to control invasive species and opined that invasive species might not provide the required cap stability/resistance to erosion that is required. He suggested that the USDA, PADEP and NJDEP lists of noxious/invasive species be reviewed and noted that species of concern would include purple loosestrife, Japanese knotweed, phragmytes, and multiflora rose. Bruce concurred that the construction of the sheetpile wall and the adjacent water depth should discourage the emergence of phragmytes, which are not currently prevalent at the site. Bruce also suggested that excessive compaction of the upper layer of the cap should be avoided during construction, which would impede the drainage of the soil and establishment of the plantings. Ray stated that this request would be presented as a discussion item for the Group.
7. PADEP's comment on Section 1.a.ii.2 of the July 14, 2008 LTM Approach Outline was based on a concern that wastewater from the power washing

activity inside Building 7 could accumulate in vaults within the building if not properly contained. Ray Lees asked Steve Langseder to confirm with Tetra Tech to ensure that they planned to contain the power washing wastewater. It was confirmed at the conclusion of the meeting that the wastewater was being contained and managed. It was noted that power washing and epoxy coating of Building 7 was listed as a remedy component in the LTM outline for completeness only (i.e., relative to describing the remedy) and was not associated with specific LTM sampling/monitoring activities.

8. EPA's comment on Section 1.b.i.1 of the Outline was addressed by noting that the phrase "evaluate effectiveness" in the outline would be revised to avoid inferring that the groundwater monitoring data would be used to evaluate remedy effectiveness.
9. Regarding EPA's comment on Section 1.b.iii.2 of the Outline, Ray reminded Sharon that the groundwater monitoring frequency is specified in the June 2004 document, and Sharon withdrew the comment. Bruce noted that EPA will seek to extend the monitoring after the initial 5-year LTM period as appropriate, and that the LTM plan should not propose less frequent than annual sampling if contamination is still detected at the end of the first 5 years.
10. EPA withdrew their comments requesting metals analyses for groundwater and twice-yearly monitoring for years 3-5 after reviewing the June 2004 document. EPA stated that they would perform the metals analyses of groundwater samples.
11. John Yagecic (DRBC) stated that the LTM must include regular visual inspections of the upland cap areas for damage to the cap components due to animals, erosion, etc. Malcolm Pirnie concurred in accordance with the June 2004 document.
12. John noted that the reference to EPA Method 1668 for PCB Congeners in the LTM outline should be Method 1668A. Malcolm Pirnie concurred.
13. Len asked Sharon about specific Region 3 requirements for submittal of multi-media electronic data deliverables (MEDDs) for the LTM samples. Sharon noted that the Region 3 website would provide the requirements, but that she was not familiar with them. Len stated that he would review the information on EPA's website and address the requirements accordingly in the LTM plan.
14. To address EPA's comments on the LTM for the mudflats and Delaware River, Len suggested that the meeting participants discuss the mechanisms that would act on the capped areas after remedial construction from a conceptual site model-like perspective, and requested additional clarification on the prior discussions regarding the potential creation of backfill sand "sampling zones" in the stone mattress cap. Bruce opined that the geotextile layer would contain the residual sediments, and suggested that there should be an objective to sample sediment that accumulated on top of the stone for comparison to background sediment. Bruce suggested that the LTM should address this type of sediment monitoring, and if during a specific monitoring event, recently accumulated sediment was not encountered at a sampling location, no sample would be collected.

15. Paul stated that he was concerned that the geotextile could be damaged by placement of the stone so that its ability to isolate residual sediments might be compromised. Ray replied that this concern that should be addressed prior to construction, since it is essentially a design QC issue. Steve Langseder interjected that Tetra Tech had recently voiced some constructability concerns regarding placement of the specified geotextile based on its rigidity and potential lack of ability to conform to unevenness in the underlying sediment.
16. John suggested placement of sediment traps on top of the capped areas to accumulate sediments for sampling and analysis. Len noted that Malcolm Pirnie had recently used sediment traps successfully in tributaries to the Passaic River to capture sediments being transported through the water column in areas with a coarse-grained, rocky bed. The sediment traps consisted of sections of pipe equipped with end caps and a longitudinal slot cut for the entire length of one side. They were deployed for 1-2 weeks by staking them on the river bottom with the slot facing up and allowed to accumulate sediment for subsequent sampling. John stated that sediment traps would collect representative sediments being transported in the vicinity of the site and their contaminant concentrations could be compared to background samples.
17. Paul stated that only the collection of cores from within the cap could provide data that would indicate whether potentially detected contaminants were originating from beneath or above the cap. Paul recommended retaining the recommendation to place backfill sand in certain interstitial locations (between the stone mattresses), collecting a one-foot thick core of backfill sand during LTM sampling, and subdividing the core into 5-cm segments for stratified analysis. Len stated that this recommendation was essentially a request for high resolution sediment cores (Paul agreed), and asserted that such a recommendation was unduly excessive for monitoring of a physical isolation cap. Paul suggested that coring of the cap/sampling of sand backfill within the cap could be held as a contingency for investigation of unacceptable sediment trap sample results.
18. Bruce and Sharon asserted that ultimately, the LTM data had to support the evaluation of the overall effectiveness of the remedy for the 5-year review. Bruce stated a concern that there could still be a potential for migration of contamination from the upland portion of the site into the Delaware River, via groundwater or porewater discharge, following remedial construction. Paul Schroeder asked if the 5-year review could lead to a decision that the sub-aqueous cap might have to be augmented or replaced. Len stated that this concern should be brought before the Group and rigorously evaluated prior to cap construction and the expenditure of construction costs.
19. Bruce noted that even the proposal to place backfill sand at selected locations in the cap wasn't adequate to monitor for potential contaminant fluxes because the sand wouldn't contain enough organic carbon to capture contaminants potentially being transported through the cap. Bruce and Paul briefly discussed the potential deployment of lipid bags within the cap or vertically stratified porewater sampling within the cap. Paul stressed that

these types of sampling were necessary to determine whether the cap was performing adequately, but Len countered that a physical isolation cap isn't designed to reduce potential product/porewater fluxes and that this type of monitoring would be inappropriate for the remedy as designed. Len questioned whether lipid bags placed in contact with the geotextile, at a depth that would otherwise be isolated from benthic organisms and fish by the stone, would be a realistic representation of exposure for any biota at the site. Len noted that it is extremely complex and difficult to obtain porewater samples and asked whether there was any baseline porewater dataset for the site. John Dobi recalled that there had been historic porewater sampling at the site, but could not recall the technique used (*e.g.*, dialysis cells or "peepers", centrifugation of large volume sediment samples) to obtain the porewater samples.

20. Bruce requested a decision tree for the LTM plan that considers the conceptual site model for Metal Bank and addresses how potential unacceptable LTM findings would lead to additional sampling to assess the origin of the contamination. Bruce stated that for the remedy to be considered successful, sampled sediment needs to contain less than 1 ppm PCBs and biota concentrations need to decrease (compared to pre-remediation biota data collected by EPA). EPA will continue to conduct caged bivalve studies and other biota sampling after the remedial construction.
21. John stated conclusively that the stone mattress and loose stone caps are simply not amenable to sampling/coring of cap layers or components. He stated that even an installed backfill sand or "pre-loaded sampler" (as discussed in the LTM Outline) would not be a representative sample since it would be a different material than the remainder of the cap. It was discussed that shifting of the stone mattresses could even trap/"pinch" pre-loaded samplers so that they might not be able to be retrieved. This argues for a need to re-examine the requirements of the June 2004 document to address the current remedy. John re-asserted that the use of sediment traps would be an effective solution, in conjunction with EPA's post-remediation biota studies.
22. Bruce suggested that an annual frequency would be appropriate for bathymetric/SSS surveys intended to confirm the physical integrity of the cap and investigate for deposition of sediments above the cap. Bruce stated that the EPA would conduct biota sampling potentially at longer intervals, due to the expectation that biota concentrations (especially fish tissue) would recover more slowly after remediation. Bruce opined that caged bivalves might respond more rapidly to changes in ambient concentrations after remediation.
23. Bruce asked whether any visual surveys or diver surveys would be conducted at the time of construction to check the spacing of the stone mattresses. Ray responded that the design spec addresses construction tolerances for the stone mattresses, in that many are already connected to each other at the time of deployment, so no diver evaluation is planned after installation.

The stone mattress installation will be confirmed using a side scan sonar survey.

24. The meeting participants agreed to adjourn. Ray proposed to communicate a schedule for resubmittal of the LTM Approach Outline and responses to Agency comments after the Group has had an opportunity to review and discuss the content of today's meeting.

If you have any questions regarding this information, please contact Malcolm Pirnie.

ljw

Attachment 5

Long Term Monitoring Plan Meeting Minutes from November 13, 2008

MALCOLM PIRNIE

Metal Bank Long Term Monitoring Plan Meeting Minutes

November 10, 2008

This memo summarizes the November 13, 2008 meeting at the Metal Bank Site regarding the Long Term Monitoring (LTM) plan and the agency comments included in the 10 November 2008 e-mail from Sharon Fang. The following participants attended or joined via teleconference:

Mark Conaron, PADEP
Sohan Garg, PADEP
Orest Kolodij, PADEP
Tim Cherry, PADEP
Sharon Fang, USEPA
Bruce Pluta, USEPA
Paul Schroeder, USACE
Charles Nicholas, USACE
Ray Lees, Malcolm Pirnie
Len Warner, Malcolm Pirnie
Joe Vitale, Malcolm Pirnie
Steve Langseder, Malcolm Pirnie
Carlo DiTullio, Malcolm Pirnie
Wyn Davies, Malcolm Pirnie
John Dobi, PSE&G Services Corporation
Kathy Patanode, FWS (via telephone)
Chris Keorner, CDM (via telephone)

1. Joe Vitale introduced the meeting by stating that the objective was to review EPA's comments on the revised LTM plan outline dated October 27, 2008 (revised LTM plan outline) and noting that he expected there would be a focus on the history and design intent of the sub-aqueous cap. The original approved cap design consisted of a two-foot thick layer of soil that was two gradations higher than the native material. Later, the cap design was modified to consist of a geotextile overlain by a 1-foot thick marine mattress containing R3 stone. The function of the cap is to physically isolate areas of slightly-impacted sediment and the current design (marine mattress) is more robust than the initial approved design. The components of the LTM plan need to be appropriate to the cap design basis and compatible with the cap design. Any proposed changes to the LTM plan elements described in the June 29, 2004 Revised Remedial Plan (2004 Revised Remedial Plan) must be approved by the PRP Group.

2. Mr. Vitale suggested that the Agency comments on the revised LTM plan outline (provided in the e-mail dated November 10, 2008 from Sharon Fang) be reviewed during the meeting. Bruce Pluta suggested that the discussion should focus on comments where clarification was requested or where there were areas of potential disagreement regarding the LTM scope. Mr. Pluta stated that EPA and the Biological Technical Assistance Group (BTAG) would continue to examine LTM proposals from the PRP Group with regard to their adequacy to enable EPA to prepare a conclusive 5-Year Review Report following completion of remedial construction.

3. Len Warner questioned how some of the Agency comments fit the cap design basis and Conceptual Site Model (CSM) for the Metal Bank Site – for example, the comments requesting placement of semi-permeable membrane devices (SPMDs) within the sub-aqueous cap, adjacent to the geotextile. Mr. Warner asked if there was a concern regarding the potential for biota to penetrate the R-3 stone and the geotextile. Mr. Pluta replied that EPA is concerned that biota will colonize the subaqueous cap via the interstitial spaces between the stone and perhaps even penetrate the geotextile, such that contaminated sediments could be disturbed/released via bioturbation. Mr. Pluta also asserted that the sediment in the cap and backfill areas presented an unacceptable ecological health risk. Mr. Warner suggested that a CSM be prepared for the upland and in-river portions of the site and the components of the remedy, so that potential concerns and the LTM activities necessary to evaluate those concerns could be readily examined. Such a CSM would help to illustrate the objectives for each piece of LTM data and also provide a context for decision trees and exit strategies.

4. Mr. Vitale summarized that two types of sub-aqueous capping will be conducted at the site. For areas where contaminated sediments are to be removed via excavation, a geotextile plus a 1-foot thick layer of R3 stone will be placed following contaminated sediment removal. In these areas, the R3 stone will be loose (*i.e.*, a marine mattress will not be installed). For the sediments to be capped without excavation, the geotextile and marine mattress described in item no. 1 of these minutes will be installed. Mr. Warner questioned whether sediments were likely to settle on top of the marine mattress following installation due to the tidal velocities, and Bruce Pluta replied that there are both erosional and depositional areas present at the site. Mr. Vitale noted that bathymetric surveys were to be conducted prior to and after installation of the cap and a side scan sonar (SSS) survey would be conducting during installation. Bathymetric and SSS surveys would also be continued during the LTM period to evaluate the status of the cap and the potential for erosion to occur around the perimeter of the cap.

5. Mr. Pluta stated that one of EPA's major concerns regarding the site during the LTM period is the potential seepage of groundwater contaminants through the sediment and their release to the river via contaminated porewater. Mr. Warner pointed out that this concern is related to the

effectiveness of the upland remedy and the control of contaminated groundwater, not the performance of the marine mattress cap. Mr. Warner noted that the subaqueous cap design will not prevent the release of potential contaminant fluxes or contaminated porewater, and it may even change existing porewater flow by compressing the sediments beneath the marine mattress (porewater may flow preferentially around the cap following construction). The marine mattress will cap a sediment area that only slightly exceeds the cleanup level, reducing the likelihood that contaminated porewater discharge has occurred at the cap location. Mr. Vitale added that the marine mattress area was initially not part of the remediation effort. Mr. Pluta proposed a site-wide porewater monitoring program, and suggested that such a program should be implemented during an initial phase of the long-term monitoring program and then terminated.

6. Mr. Vitale asked for clarification of the USACE comment that one of the LTM objectives be stated as "Is risk reduction achieved and maintained?" Paul Schroeder clarified that control of risk posed by the release of contaminants should be an overarching goal of the project. Mr. Schroeder expressed the concern that placement of the geotextile and marine mattress will displace/resuspend contaminated sediment to locations outside the cap's 'footprint' and reduce the effectiveness of the remedy. Mr. Warner indicated that control of resuspension was more appropriate during the construction period than the LTM effort. Charles Nicholas replied that USACE was currently focusing on the effectiveness of the silt curtains deployed to contain resuspension during construction of the cap. Mr. Vitale concurred that the stone mattresses should be installed deliberately and diligently. Mr. Warner further described that residuals from cap placement are likely to be a very thin layer with a commensurately low contaminant mass. All projects that directly remediate contaminated sediments are likely to create residuals, and the concentration of contaminants in the residuals is likely to be similar to the average concentration of the material removed by the final dredging pass or in this case, capped by the marine mattress. Where action is taken specifically to control residuals, it generally consists of the placement of a thin layer (*e.g.*, 6 inches) of clean sand to dilute the residuals.

7. Mr. Warner asked EPA to discuss their expectations for the determination of site-specific biota-sediment accumulation factors (BSAFs). Mr. Warner described that the data from SPMDs would not be appropriate for BSAF calculation (there are concerns that SPMD data would be an overestimate of biota exposure, perhaps by a factor of two, and asked whether EPA had an opinion regarding the use of laboratory bioaccumulation studies using sediment collected from the Metal Bank site. Mr. Pluta responded that in-situ studies of biota exposure (caged bivalves, oyster plates, Hester-Dendy deployments, etc.) are preferable to lab studies, due to concerns regarding potential changes in sediment sample chemistry ex-situ (during collection, transportation to the lab, and sample management).

8. In response to questions regarding prior deployments of SPMDs at the Metal Bank site, Kathy Patanode stated that the SPMDs installed within PVC tubes in 2003-04 may never have been analyzed. EPA is to determine whether the data from this effort is available. Ms. Patanode requested that SPMDs be deployed to measure potential fluxes of contamination during the period between the installation of the backfill stone and the time at which adequate sediment accumulates above the backfill to provide a substrate for biota to colonize. This may not be required at the stone mattress locations, since the sediments at these locations were not highly contaminated and therefore are most likely not associated with contaminated groundwater discharge areas. The use of SPMDs is requested to monitor the potential migration of contaminated groundwater from the site into the Delaware River, which is currently only contemplated in the form of groundwater monitoring in the 2004 Revised Remedial Plan. Mr. Warner asked the participants to consider the conditions under which an appropriately-designed, upland groundwater monitoring plan could entirely replace a potential porewater monitoring program.

9. In response to USACE comment no. 2, Mr. Lees responded that TOC would be added to the list of sediment analytical parameters.

10. Regarding USACE comment no. 3, Mr. Warner clarified that the phrase 'equilibrating to background' was intended to describe a sediment condition that was indistinguishable from upstream and downstream sediment quality, which would indicate that the Metal Bank site source control actions were successful. Mr. Schroeder replied that the most effective monitoring for source control should be "from the bottom up," and stated a concern that monitoring of ambient sediments and even water column sampling might not be sensitive enough to detect contaminant fluxes from the upland site into the Delaware River. Mr. Schroeder suggested that measurement of biota exposures in demonstrated depositional areas, such as the mudflat excavation areas, would be the most effective actions to take during the LTM period. Sediments accumulating on top of stone backfill and/or the stone mattresses would be the preferential material to sample.

11. The remaining USACE comments were reviewed:
    - Comment no. 4 was withdrawn by Mr. Schroeder. Since R-3 stone is being used as backfill and in the stone mattresses, this comment is not applicable.
    - Comment no. 5 will be addressed via biota tissue-residue analyses and the required calculation of BSAFs.
    - Comment no. 6 was addressed through the earlier discussions, which explained the rationale for the use of sediment traps and clarified the agency's concerns.
    - Comment no. 7 (request for TOC analyses) will be incorporated into the LTM plan.

12. DRBC's comments were noted by the meeting participants.

13. The BTAG Comments dated November 7, 2008 were discussed by the meeting participants.
    - For the comments regarding upland cap maintenance and control of invasive plants, Mr. Lees stated that he understood the comments and would discuss the requested actions with the PRP Group.
    - Regarding in-river monitoring, Mr. Vitale confirmed that the LTM would apply to both marine mattress and backfill areas and also the perimeter of these areas. Mr. Vitale stated that sampling locations and monitoring frequency would be described in the Draft LTM plan.
    - Regarding the use of SPMDs, Ms. Patanode reiterated that SOPs should be included in the LTM plan if they are to be used at the site.
    - Regarding decision trees, forensic investigations, and exit strategies to be included in the Draft LTM plan, Mr. Warner stated that a CSM that captured the stakeholders' understanding of the site would be useful in developing, reviewing, and finalizing these items.

14. The meeting was adjourned. Agency personnel conducted a site walk to observe the test pit within excavation SA 4/5, which contained free product, and two potential former monitoring/recovery wells that were located in the SA 4/5 excavation near the southeast corner of the upland property.

Malcolm Pirnie will submit a response to comments document addressing the Agency comments dated November 10, 2008. A draft LTM plan will be included with this document. Based on the discussions held on November 19, 2008 and documented in these minutes, we propose that the most appropriate method to monitor potential contaminant migration from site groundwater to the Delaware River is via a monitoring well network and the LNAPL monitoring trench to be installed on the upland portion of the site and not via the installation of SPMDs or porewater sampling. The monitoring in the subaqueous backfill and marine mattress areas will be designed to monitor the physical integrity of the cap and backfill and to allow calculation of BSAFs or other measure of exposure to biota above the cap. These recommendations will be addressed in the Draft LTM Plan submittal.

If you have any questions regarding this information, please contact Joe Vitale of Malcolm Pirnie, Inc. at (781)-213-4930.

ljw

Attachment 6

SOP No. 1: Procedures for Well Installation and Groundwater Installation, July 2009, Revision No. 1

Malcolm Pirnie, Inc
Metal Bank Superfund Site
Standard Operating Procedure

Procedure SOP 01
Date· July 2009
Revision No. 1
Prepared by Jeffrey Frederick
Approved by Len Warner

Title: Procedures for Well Installation and Groundwater Sampling

I. Introduction

This guideline provides general reference information on monitoring well installation and groundwater sampling

II Definitions

The following terminology is applicable to groundwater sampling activities

Groundwater Samples Aqueous samples that are representative of the groundwater contained in an underlying aquifer.

Aquifer A geologic formation, group of formations, or part of a formation that contains sufficient saturated permeable material to yield economical quantities of water to wells and springs

Bailer A tall, narrow, stainless steel or Teflon bucket equipped with a check valve on the bottom The check valve allows water to enter from the bottom as the bailer is lowered, then prevents its release when the bailer is raised

Electronic Water Level Indicator. An electronic sounder used to measure the depth to water in a well The Electronic Water Level indicator consists of a milliammeter, a measured electrical cable to determine depth, and a contact electrode When the electrode contacts the groundwater, an electronic circuit is completed that registers on the milliammeter Upon contact, depth to groundwater is determined from the measured electrical cable

Well Casing Stainless steel, or PVC pipe used to keep the well borehole open.

Well Screen Pipe with openings such as slots or holes to allow groundwater into the well from the aquifer.

III Equipment

1 Field logbook
2 Digital camera
3 Electronic water level indicator
4 Centrifugal pump
5 Horiba U-10 Water Quality Checker, or equivalent
6 Nylon guide line (3 mm)
7. Disposable gloves
8. Plastic zip-loc bags
9 Plastic garbage bags
10. Measuring tapes
11. Polyethylene sheeting
12 Aluminum foil
13 MiniRAE 10.6 eV photoionization detector (PID)
14 Sampling jars
15 Paper towels
16 Sample coolers
17 Ice
18 DOT-approved 55 gallon drums, empty and clean, with sealable covers

IV Guidelines

1 Monitoring Well Installation and Development

Monitoring well installation and development will be conducted in accordance with Section 02755 in the Revised Design Report (AMEC, 2007)

2 Groundwater Sampling

Groundwater sampling shall be conducted in accordance with USEPA Region II Low Flow methodology Guidance for Low Flow sampling methodology is provided as an attachment to this SOP.

Generally, the following considerations should be taken into account during groundwater sampling activities

A. Prior to entering the property, confirm with the property owner, tenant, landlord, etc. that access to the property was granted.

B All equipment entering the well or included in the sampling chain should be cleaned using appropriate decontamination procedures and should be staged on 0 5-mil polyethylene plastic

C A new, clean pair of disposable nitrile gloves will be worn during sampling and changed between sampling locations.

D. All sample containers will be placed in separate plastic bags immediately after collection and decontamination of the outside of the container

E All used field equipment to be decontaminated will be placed in plastic bags. All field waste (*i e*, PPE, plastic sheeting, towels, etc) will be placed in a plastic bag for subsequent disposal

F. If possible, one member of the field team will be solely responsible for entering all field activity information into the field logbook (if applicable), while another member(s) will be solely responsible for collecting samples.

G Sample collection activities will proceed progressively from the suspected least contaminated area to the suspected most contaminated area Each monitoring well will be checked for the potential presence of free product using a decontaminated water/product level interface meter prior to well purging.

H Field personnel will use equipment constructed of Teflon®, stainless steel or carbon steel that has been properly decontaminated The decontamination procedures outlined in DMW4-SOP-02 will be followed

I Quality control/quality assurance (QA/QC) samples will be collected according to the FSP and QAPP. If environmental samples are collected solely for disposal purposes, QA/QC samples will not be collected.

J The chain of custody procedures described in the FSP and QAPP will be followed.

K The sample management procedures described in the FSP and QAPP will be followed

L Plastic sheeting should be placed around the well to prevent sampling equipment from coming into contact with the ground

M. All downhole equipment must be constructed of Teflon®, stainless steel, or polypropylene.

N Retrieval lines for pumps should be polypropylene monofilament, stainless steel, or Teflon coated wire At a minimum, leaders constructed of these materials are acceptable

O Pumps should not be allowed to drop freely into the well

P Outer gloves should be changed before sampling or handling clean equipment.

Q. Tighten the cap on all sample containers after sampling

R. The preferred order of sample collection is as follows

1 In situ measurements (*i e*, temperature, pH, Eh, conductivity, salinity, and turbidity)
2. Polychlorinated Biphenyl (PCB) Congeners
3. PCB Aroclors
4. Dioxins
5. Semivolatile Organic Compounds (SVOCs)
6 Total Metals
7 Dissolved Metals

V References

ASTM D4448. Standard guide for sampling groundwater monitoring wells. American Society of Testing and Materials, Philadelphia, Pennsylvania October 1985

ASTM D4750 Standard test method for determining subsurface liquid levels in a borehole or monitoring well American Society for Testing and Materials, Philadelphia, Pennsylvania November 27, 1987

EPA, 1984 Characterization of hazardous waste sites – A methods manual, Volume II, Available sampling methods. Second edition. Section 3.4, Groundwater pp 3-25 to 3-31. Section 3 4.3, Method 111-9. Sampling monitor wells with a bucket type bailer, pp-3-35 to 3-37 Environment Monitoring Systems Laboratory, Office of Research and Development U.S. Environmental Protection Agency, Las Vegas, Nevada. EPA-600/4-84-076. December 1984.

EPA, 1987. A compendium of Superfund field operations methods Section 8.5 6 9· groundwater sampling considerations, pp 8.5-42 to 8.5-43. Section 8.5 6 8 9 Evaluation of sample collection materials, pp 8 5-41 to 8.5-42 Section 8.5.6 4.1 Bailers p 8.5-8 Office of Emergency and Remedial Response, Office of Waste Programs Enforcement. U S. Environmental Protection Agency, Washington, D C EPA/540/P-87/001. December 1987

Attachment 7

SOP No. 2: Minirae® 2000 Photoionization Meter Operation and Maintenance Manual

MiniRAE 2000

Portable VOC Monitor
PGM-7600

OPERATION AND MAINTENANCE MANUAL

(Document No.: 011-4001-000)
Revision E, May 2005

RAE SYSTEMS

ISO 9001 CERTIFIED

ATTENTION!

For European Applications

A. CE 0575 Ex II 1G/2G
DEMKO 03 ATEX 0204759X
Eex ia IIC T4

B. Recharge batteries only in non-hazardous locations.

C. Do not connect external cable to serial interface jack in hazardous locations.

D. Use RAE Systems Adapter P/N 500-0072 for connection to communication port and charging jack only in a non-hazardous area.

Table of Contents

1. GENERAL INFORMATION 1-1

1.1 General Specifications 1-2

2. OPERATION OF MINIRAE 2000 2-1

2.1 Physical Description 2-2

2.2 Keys and Display 2-3

2.3 Power On/Off 2-4

2.4 Operation 2-5

2.4.1 Survey Mode 2-6

2.4.2 Hygiene Mode 2-14

2.5 Alarm Signals 2-16

2.6 Preset Alarm Limits and Calibration 2-18

2.7 Integrated Sampling Pump 2-19

2.8 Back Light 2-20

2.9 Datalogging 2-21

3. OPERATION OF ACCESSORIES 3-1

3.1 Standard Kit and Accessories 3-2

3.2 Optional Accessories 3-5

4. PROGRAMMING OF MINIRAE 2000 4-1

4.1 Programming Mode 4-2

4.2 Keys for Programming Mode 4-3

4.3 Entering into Programming Mode 4-4

4.4 Calibrate and Select Gas 4-5

4.4.1 Fresh Air Calibration 4-8

4.4.2 Span Calibration 4-9

4.4.3 Select Cal Memory 4-11

4.4.4 Change Span Value 4-12

4.4.5 Modify Cal Memory 4-13

4.4.6 Change Correction Factor 4-14

4.5 Change Alarm Limits 4-15
4.5.1 Change Low Alarm Limit 4-17
4.5.2 Change STEL Limit 4-18
4.5.3 Change TWA Limit 4-19
4.6 View or Change Datalog 4-20
4.6.1 Reset Peak/Minimum 4-21
4.6.2 Clear Data 4-223
4.6.3 Change Data Period 4-2324
4.6.4 Change Average Type 4-245
4.7 Change Monitor Setup 4-256
4.7.1 Change Operation Mode 4-267
4.7.2 Change Site ID 4-278
4.7.3 Change User ID 4-2829
4.7.4 Change Alarm Mode? 4-290
4.7.5 Change User Mode 4-301
4.7.6 Change Date 4-312
4.7.7 Change Time 4-323
4.7.8 Change Lamp 4-334
4.7.9 Change Unit 4-345
4.7.10 Change Dilution Ratio 4-356
4.7.11 Change Output? 4-367
4.7.12 Change DAC Range? 4-378
4.7.13 Set Temperature Unit? 4-389
4.8 Exit Programming Mode 4-390
5. THEORY OF OPERATION 5-1
6. MAINTENANCE 6-1
6.1 Battery Charging and Replacement 6-2
6.2 PID Sensor & Lamp Cleaning /Replacement 6-4
6.3 Sampling Pump 6-7
6.4 Turning on the UV Lamp 6-9
7. TROUBLESHOOTING 7-1
7.1 Troubleshooting Table 7-2
APPENDIX A. QUICK REFERENCE GUIDE A-2

⚠ WARNING ⚠

- Do NOT proceed before reading -

This manual must be carefully read by all individuals who have or will have the responsibility for using, maintaining, or servicing this product.

The product will perform as designed only if it is used, maintained, and serviced in accordance with the manufacturer's instructions.

CAUTION!!

To reduce the risk of electric shock, turn off power before removing the monitor cover. Disconnect the battery before removing sensor module for service. Never operate the monitor while the cover is removed. Remove monitor cover and sensor module only in an area known to be non-hazardous.

The model PGM-7600 equipment is classified as to intrinsic safety for use in class I, division 1, groups A, B, C, D, or non-hazardous locations only.

Special Notes

-1-

When the MiniRAE 2000 Monitor is taken out from the transport case and turned on for the first time, there may be some residual organic or inorganic vapor trapped inside the detector chamber. The initial PID sensor reading may indicate a few ppm. Enter an area known to be free of any organic vapor and turn on the monitor. After running for several minutes, the residual vapor in the detector chamber will be cleared and the reading should return to zero.

-2-

The battery of the MiniRAE 2000 monitor will discharge slowly even if it is turned off. If the monitor has not been charged for 5-7 days, the battery voltage will be low. Therefore, it is a good practice to always charge the monitor before using it. It is also recommended to fully charge the monitor FOR AT LEAST 10 HOURS before first use. See Section 7 for more information on battery charging and replacement.

WARNINGS

STATIC HAZARD: Clean only with damp cloth.

For safety reasons this equipment must be operated and serviced by qualified personnel only. Read and understand instruction manual completely before operating or servicing.

Use only RAE Systems battery packs, part nos. 012-3050, 012-3051 or 012-3052. This instrument has not been tested in an explosive gas/air atmosphere having an oxygen concentration greater than 21%. Substitution of components may impair intrinsic safety. Recharge batteries only in non-hazardous locations.

The calibration of all newly purchased RAE Systems instruments should be tested by exposing the sensor(s) to known concentration calibration gas before the instrument is put into service.

For maximum safety, the accuracy of the MiniRAE 2000 should be checked by exposing it to a known concentration calibration gas before each day's use.

AVERTISSEMENTS

DANGER RISQUE D'ORIGINE ELECTROSTATIQUE: Nettoyer uniquement avec un chiffon humide.

Pour des raisons de sécurité, cet équipment doit être utilisé, entretenu et réparé uniquement par un personnel qualifié. Étudier le manuel d'instructions en entier avant d'utiliser, d'entretenir ou de réparer l'équipement.

Utiliser seulement l'ensemble de batterie RAE Systems, la reference 012-3050, 012-3051 au 012-3052. Cet instrument n'a pas été essayé dans une atmosphère de gaz/air explosive ayant une concentration d'oxygène plus élevée que 21%. La substitution de composants peut compromettre la sécurité intrinsique. Ne charger les batteries que dans emplacements désignés non-dangereuse.

La calibration de toute instruments de RAE Systems doivent être testé en exposant l'instrument a une concentration de gaz connue par une procédure diétalonnage avant de mettre en service l'instrument pour la première fois.

Pour une securite maximale, la sensibilité du MiniRAE 2000 doit être verifier en exposant l'instrument a une concentration de gaz connue par une procédure diétalonnage avant chaque utilisation journalière.

1. GENERAL INFORMATION

MiniRAE 2000 Portable VOC Monitor (Model PGM 7600) is a compact monitor designed as a broadband VOC gas monitor and datalogger for work in hazardous environments. It monitors Volatile Organic Compounds (VOC) using a Photo-Ionization Detector (PID) with a 9.8 eV, 10.6 eV, or 11.7 eV gas discharge lamp. Features are:

- **Lightweight and Compact**
  -Compact, light weight (19 oz.) and rugged design
  -Built-in sample draw pump

- **Dependable and Accurate**
  - Up to 10 hours of continuous monitoring with rechargeable battery pack
  - Designed to continuously monitor VOC vapor at ppm levels

- **User Friendly**
  -Preset alarm thresholds for STEL, TWA, low and high level peak values. Audio buzzer and flashing LED display are activated when the limits are exceeded.

- **Datalogging Capabilities**
  -15,000 point datalogging storage capacity for data download to PC

MiniRAE 2000 consists of a PID with associated microcomputer and electronic circuit. The unit is housed in a rugged ABS + PC case with a backlit 1 line by 8 character dot matrix LCD and 3 keys to provide easy user interface.

1.1 General Specifications

Table 1.1

Portable VOC Monitor Specification	
Size:	8.2"L x 3.0"W x 2 0"H
Weight:	19.5 oz with battery pack
Detector.	Photo-ionization sensor with 9.8, 10.6, or 11.7 eV UV lamp
Battery: A 4.8V /1250 mAH Rechargeable Nickel Metal Hydride battery pack (snap in, field replaceable)	
Battery Charging:	10 hours charge through built-in charger
Operating Hours:	Up to10 hours continuous operation
Display:	1 line by 8 characters 5x7 dot matrix LCD (0.4" character height) with LED back light automatically in dim light
Range, Resolution & Response time (t_{90}):	
Isobutylene (calibration gas)	
	0-99 ppm 0.1 ppm 2 sec
	100-1,999 ppm 1.0 ppm 2 sec
	2000-10,000 ppm 1.0 ppm 2 sec
Measurement Accuracy (Isobutylene):	
	0 – 2000 ppm: ± 2 ppm or 10% of reading.
	> 2000 ppm. ± 20% of reading
PID Detector:	Easy access to lamp and sensor for cleaning and replacement
Correction Factors:	Built-in 102 VOC gases
Calibration·	Two-point field calibration of zero and standard reference gas
Calibration Memory:	
	Store up to 8 separate calibration, alarm limits and span value
Inlet Probe·	Flexible 5" tubing
Keypad:	1 operation key and 2 programming keys

Direct Readout:	Instantaneous, average, STEL and peak value, battery voltage and elapsed time
Intrinsic Safety:	UL & cUL Class 1, Division I, Group A,B,C,D, Temperature Code T3C (US & Canada); CE 0575 Ex II 1G DEMKO 02 ATEX 0204759 Eex ia IIC T4 (Europe)
EM Interference:	No effect when exposed to 0.43 W/cm^2 RF interference (5 watt transmitter at 12 inches)
Alarm Setting:	Separate alarm limit settings for Low, High, STEL and TWA alarm
Operating Mode:	Survey or Hygiene mode
Alarm:	90 dB buzzer and flashing red LEDs to indicate exceeded preset limits, low battery voltage, or sensor failure.
External Alarm:	Optional plug-in pen-size vibration alarm or remote alarm
Alarm Mode:	Latching or automatic reset
Real-time Clock:	Automatic date and time stamps on data logged information
Datalogging:	15,000 points with time stamp, serial number, user ID, site ID, etc.
Communication:	Upload data to PC and download instrument setup from PC through RS-232 port
Sampling Pump:	Internally integrated. Flow rate: 450-550 cc/min.
Temperature.	0° to 45°C (32° to 113°F)
Humidity:	0 % to 95 % relative humidity (non-condensing)
Housing:	ABS + PC, conductive coating, splash and dust proof, will withstand 1 meter drop test with rubber boot
Attachment:	Wrist strap, rubber boot and belt clip

2. OPERATION OF MINIRAE 2000

The MiniRAE 2000 Portable VOC Monitor is a compact Monitor designed as a broadband VOC gas monitor and datalogger for work in hazardous environments. It gives real time measurements and activates alarm signals whenever the exposure exceeds preset limits. Prior to factory shipment the MiniRAE 2000 is preset with default alarm limits and the sensor is pre-calibrated with standard calibration gas. However, the user should test the instrument and verify the calibration before the first use. After the monitor is fully charged and calibrated, it is ready for immediate operation.

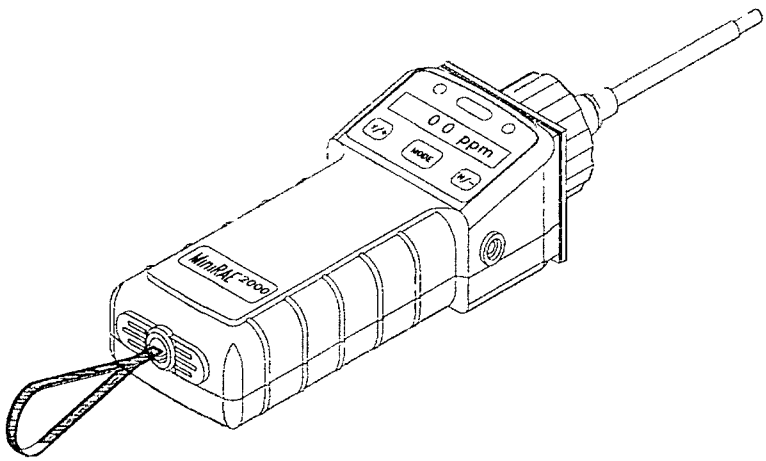

Figure 2-1 MiniRAE 2000

2.1 Physical Description

The main components of the MiniRAE 2000 Portable VOC monitor include:

- Three keys for user to interact with the monitor: 1 operation key and 2 programming keys for normal operation or programming of the monitor
- LCD display with back light for direct readout and calculated measurements
- Buzzer and red LED's for alarm signaling whenever the exposures exceed preset limits
- Wrist strap
- Charge contact for plugging directly to the charging station
- Gas entry and exit ports
- Serial communication port for PC interface
- External alarm and analog output port
- Protective rubber cover

2.2 Keys and Display

Figure 2.2 shows the LCD display and the keypad on the front panel of the monitor. The function of the 3 keys during normal operation are summarized below:

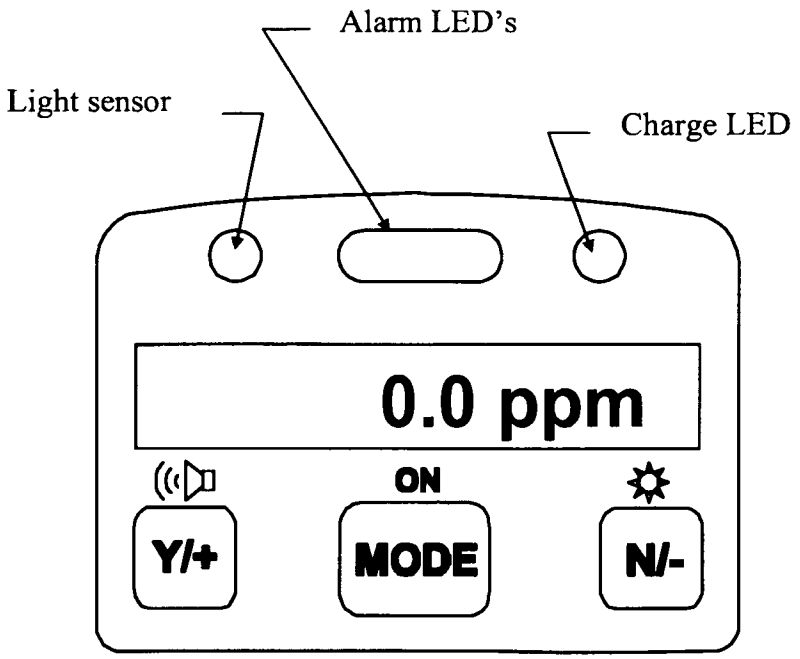

Figure 2-2 LCD Display and Keypad

Key	Function in Normal Operation
[MODE]	-Turn on/off the power* and step through menu items
[N/-]	-Toggle on/off the back light, negative acknowledge, decrease value
[Y/+]	-Start measurement, positive acknowledge, increase value value

* Pressing and holding **[MODE]** key for 5 seconds turns off the power to the monitor. Monitor will beep once per second and display countdown timer during power-down sequence. Press **[MODE]** key momentarily to step through menu items. To save time, press any key during message scrolling to skip to the end of the message.

2.3 Power On/Off

To turn on the MiniRAE 2000 portable VOC monitor, press **[MODE]** key for one second and release. The audio buzzer will beep once and the air pump will turn on. The display will show "ON!.." and then "Ver n.nn" to indicate the unit's current firmware version number. Next displayed are the serial number, the model number, Operating mode, current date and time, unit internal temperature, gas selected, high low, STEL, TWA/AVG alarm limits, battery voltage, and shut off voltage. Also displayed are internal mode settings such as User mode, Alarm mode, datalog time remaining and log periods in the respective order.

To turn off the MiniRAE 2000 portable VOC monitor, press and hold the **[MODE]** key for 5 seconds. The monitor will beep once per second during the power-down sequence with a count down timer showing the number of remaining seconds. The message "Off!.." flashes on the LCD display and the display will go blank indicating that the monitor is turned off.

Data protection during power off

When the monitor is turned off, all the current real time data including last measured value are erased. However, the datalog data is preserved in non-volatile memory. Even if the battery is disconnected, the datalog data will not be lost. While the power is off, the real time clock will continue to operate until the battery is completely drained (usually in 4-5 days without any charging). If the battery is completely drained or is disconnected from the monitor for more than 30 minutes, the real time clock will be lost. In this case, the user needs to enter the real time clock information again, as described in Section 4, or send the PC clock during configuration through the PC communication.

2.4 Operation

The **MiniRAE 2000** VOC monitor has two operation modes: **Survey** and **Hygiene** mode. The **Survey mode** allows the user to manually start and stop the monitoring/measuring operation and display certain exposure values. In the **Hygiene mode,** the monitor runs continuously after the monitor is turned on. Refer to Section 4.7.1 for switching between the two modes.

2.4.1 Survey Mode

After the monitor is turned on, it runs through the start up menu. Then the message "**Ready...**" is displayed (see figure below).

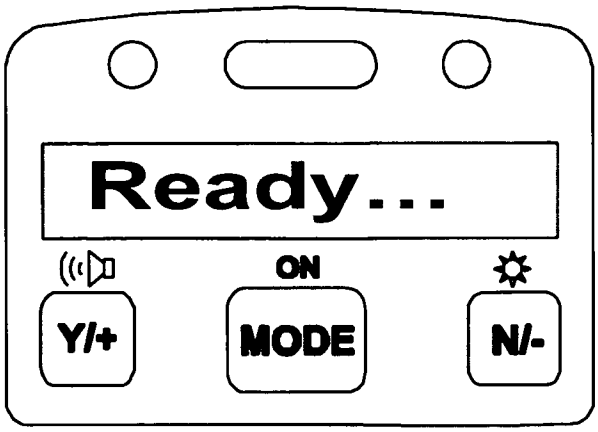

At this point, the user has two options:

1. Step through the Main Menu.
2. Take a measurement.

Press the **[MODE]** button to step through the Main Menu. Press the **[Y/+]** button to proceed to take a measurement.

The Main Menu

Press the **[MODE]** button to enter the Main Menu. Press the **[Y/+], [MODE]** or **[N/-]** as indicated in the flow chart below to step through the Main Menu. The PID sensor and pump are turned off during this time.

The Main Menu functions are:

- **Ready...**
- **Check**
- **Site ID = xxxx**
- **Gas = xxxx**
- **Warm up**
- **X.x ppm**
- **Stop?**
- **TWA/Avg x.x ppm**
- **STEL x.x ppm**
- **Peak x.x ppm**
- **Run time hh:mm**
- **Bat = X.XV**
- **Mm/dd/yy**
- **hh:mm**
- **T = xxxF [date, time and temperature (°C or °F)]**
- **Log On/Off?**
- **PC Comm?**
- **Survey**

These functions are arranged in a "round robin" order. To select a specific function, press the button as shown below until the desired function appears.

Main Menu

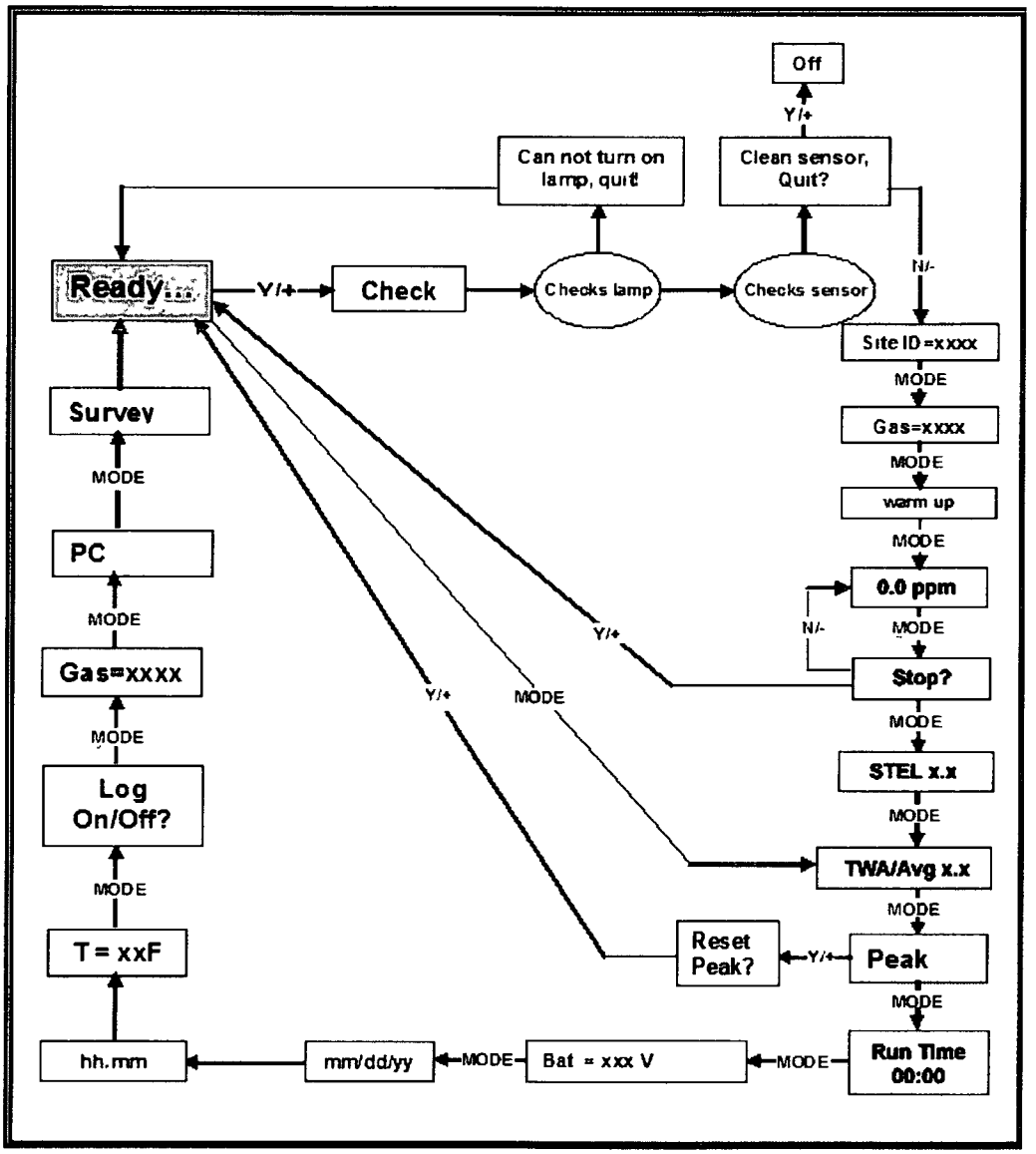

The Main Menu Functions

- **Ready...:** Indicates that the monitor is ready to take a measurement or to step through the Main Menu. Press the **[Y/+]** button to advance to taking a measurement (read "Taking a Measurement" on Page 2-12 for details).

  Note: The **Ready...** screen is skipped if the menu is cycled through while a measurement is running.

- **Check...:** This message displays while the system is checking the lamp and the sensor. If the lamp test succeeds, the system will progress to checking the sensor. If the lamp test does not succeed, the display will read **Can not turn on lamp, quit!**

  - **Can not turn on lamp, quit!:** This message displays when the lamp does not turn on. The system will automatically return to **Ready...** allowing the user to test the lamp again. If the lamp fails a second time, turn the monitor off and refer to Section 7.2 "**PID Sensor & Lamp Cleaning / Replacement**".

  - **Clean Sensor, Quit?:** This message displays when the sensor requires cleaning. Press the **[Y/+]** button to turn the monitor off and clean the sensor. Press the **[N/-]** button and the system will progress to the **Site ID = xx**

- **Site ID = xxxx:** This display shows the Site ID and indicates that the monitor is about to start taking measurements (read "Taking a Measurement" for details)

  Note: This display appears only after a measurement has been started. It does not appear when the user is cyling through the Main Menu and the monitor is idling.

- **Gas = xxxx:** This display identifies the gas to be measured and indicates that the monitor is about to take a measurement (read "Taking a Measurement" for details)

Note: This display appears only after a measurement has been started. It does not appear when the user is cyling through the Main Menu and the monitor is idling.

- **x.x ppm:** (read "Taking a Measurement" for details)

  Note: This display appears only after a measurement has been started. It does not appear when the user is cyling through the Main Menu and the monitor is idling.

- **TWA/Avg:** Displays (in ppm) the Time Weighted Average (TWA) or the Average since the start of the measurement. The average is recalculated every minute.

- **STEL:** Displays the Short Term Exposure Limit.

- **PEAK:** Displays (in ppm) the highest instantaneous reading since the start of the measurement. If **[Y/+]** is pressed while the peak reading is displayed, the unit will ask **Reset Peak?**. If **[Y/+]** is pressed again, the peak value will be cleared and the display will return to the **Ready...** message or instantaneous reading. The peak reading is automatically reset when a new measurement is started by pressing **[Y/+]** from the **Ready...** screen.

- **Run time hh:mm:** The duration of the current measurement period.

- **Bat = X.XV:** The current battery voltage.

  Note: A fully charged battery pack should show 4.8 volts or higher. When the battery voltage falls below 4.4 volts, a flashing **"Bat"** will appear as a warning message. At that point, you have 20-30 minutes of run time remaining. When the battery voltage falls below 4.2 volts the monitor turns off automatically.

- **Mm/dd/yy:** The current date.

- **hh:mm:** The current time (24-hour format)

- **T = xxxF:** The internal unit temperature in degrees Fahrenheit. (see Section 4.7.13 to change temperature units)
- **Log on/Off?:** Allows the user to start datalogging of the current measurement. A superscript "L" flashes in the ppm measurement display when datalogging is on. This screen is not shown when datalogging is disabled or when the monitor is not operating in manual start/stop mode.
- **PC Comm?:** This function enables the user to upload data from the MiniRAE 2000 to a Personal Computer (PC) or send/receive configuration information between a PC and the MiniRAE 2000. Press **[MODE]** to return to **Ready...** .

  To communicate with a PC, connect the monitor to the serial port of a PC and start the MiniRAE 2000 application software. Press the **[Y/+]** button and the LCD displays **"pause monitor, ok?"** Press the **[Y/+]** button one more time, and the display shows **"Comm..."** The monitor is now ready to receive commands from the PC.
- **Survey:** This function displays the Current Operating Mode (**Survey** or **Hygiene**).

Taking a Measurement

There are two ways to start a measurement.

1. Operating in Hygiene mode.
2. Manually start and stop measurement in Survey mode.

To start a measurement in Hygiene mode, please refer to Section 4.7.1, "**Change Operation Mode**". To start a measurement in Survey Mode, the MiniRAE 2000 monitor must first be in the "Ready..." mode. This is the mode to which the monitor normally powers up.

Measurement phases

1. Ready
2. Start measurement
3. Measurement display and datalogging
4. Stop measurement

Ready

The display reads **Ready...** indicating the unit is ready to start a measurement.

Start Measurement

Press the **[Y/+]** button to start the check cycle (see above), and then the measurement cycle.

After completing the **Check** cycle, the display will show the **Site ID** and then the **Gas** selected for measurement. The pump will start and the reading will be displayed. The **Peak** and **Average** values will be automatically reset to zero.

Measurement Display and Datalog

Instantaneous readings of the gas concentration in parts per million (ppm) are updated every second. A flashing superscript **L** is displayed when datalogging is on. Datalog information is saved only after one full datalog period is completed.

Stop Measurement

Press the **[MODE]** button and the display shows Stop? Press **[N/-]** to continue measurement and **[Y/+]** to stop the measurement and datalog event. The pump stops automatically when measurement is stopped. Peak and average values for the current measurement can be read in idle mode until a new measurement is started.

Automatic Increment of Site ID

Every time a measurement is taken, the site ID will be incremented by one automatically in Survey mode.

Variable Alarm Signal

In Survey Mode, if the measurement exceeds the low alarm limit, the buzzer and flashing alarm are activated and will beep/flash once per second. The alarms will increase in frequency as the gas concentration approaches the high alarm limit reaching 8 times per second when the high alarm has been exceeded.

Press **[Y/+]** key to clear if latching alarm.

2.4.2 Hygiene Mode

In Hygiene Mode, the unit will continuously taking measurements, once the power is turned on. After the initial start-up sequence displaying the current monitor settings, the LCD displays the instantaneous readings.

The Hygiene operation menu displays include:

- **Real time readings in ppm**
- **Current TWA/Avg, STEL and Peak values (see Section 4.6.6)**
- **Run time**
- **Current battery voltage**
- **Date, time and temperature**
- **Log on/off?**
- **Gas name**
- **PC communication?**
- **Hygiene**

Detailed description of most of these displays are the same as Section 2.4.1.

HYGIENE MODE MAIN MENU

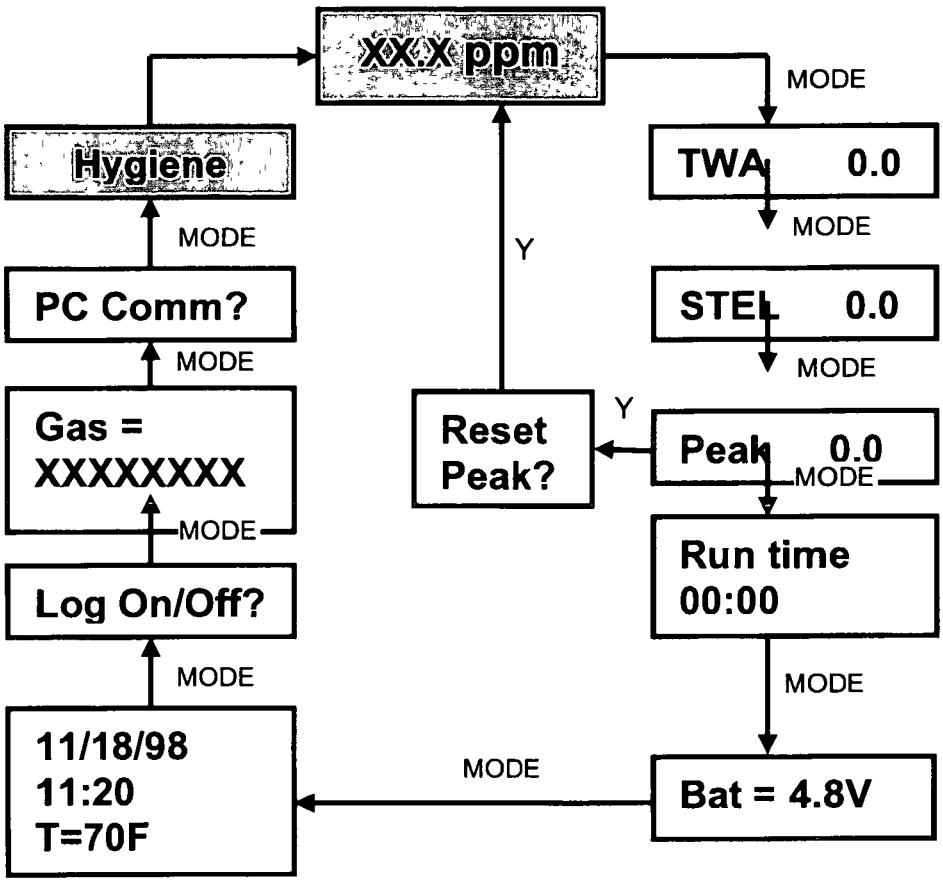

To choose a specific display, press the **[MODE]** key one or more times until the desired display appears, or the **[Y/+]** key where indicated with a Y.

Note: To get back to instantaneous reading from any of the above display, press **[MODE]** key repeatedly until the "XX.X ppm" display appears.

2.5 Alarm Signals

During each measurement period, the gas concentration is compared with the programmed alarm limits (gas concentration alarm limit settings: Low, High, TWA and STEL). If the concentration exceeds any of the preset limits, the loud buzzer and red flashing LED are activated immediately to warn the user of the alarm condition.

In addition, the MiniRAE 2000 will alarm if one of the following conditions occurs: battery voltage falls below a pre-set voltage level (4.4 V), failure of UV lamp, pump stall, or when the datalog memory is full. When the low battery alarm occurs, there will be approximately 20-30 minutes of operating time remaining. When the battery voltage falls below 4.2 V, the monitor will turn off automatically.

Alarm Signal Summary:

Condition	Alarm Signal
Gas exceeds "High Alarm" limit	3 beeps/flashes per second
Gas exceeds "Low Alarm" limit	2 beeps/flashes per second
Gas exceeds "TWA" limit	1 Beeps/flashes per seconds
Gas exceeds "STEL" limit	1 Beeps/flashes per seconds
Pump failure	3 beeps/flashes per second plus "Pump" message on LCD
PID lamp failure	3 beeps/flashes per second plus "Lamp" message on LCD
Low battery	1 flash per second, 1 beep per minute plus "Bat" message on LCD
Memory full	1 flash per second plus "Mem" message on LCD

Alarm Signal Testing:

Under normal non-alarm conditions, it is possible to test the MiniRAE 2000 LED and buzzer in Special Diagnostic Mode (see Section 8 for details).

2.6 Preset Alarm Limits and Calibration

The MiniRAE 2000 portable VOC monitor is factory calibrated with standard calibration gas, and is programmed with default alarm limits. There are 102 gas settings stored in the library. Some examples of calibration and alarm limits are shown below. Refer to Section 4 on programming procedures for selecting a different gas, perform a calibration or set new alarm limits.

Factory Calibration and Preset Alarm Limits

Cal Gas	Cal Span	unit	Low	High	TWA	STEL
Isobutylene	100	ppm	50	100	100	250
Hexane, n-	100	ppm	500	750	500	750
Xylene, m-	100	ppm	100	150	100	150
Benzene	5	ppm	2	5	5	2
Styrene	50	ppm	20	40	20	40
Toluene	100	ppm	50	100	50	100
Vinyl Chloride	10	ppm	5	10	5	10
Custom	100	ppm	50	100	50	100

2.7 Integrated Sampling Pump

The MiniRAE 2000 portable VOC monitor includes an integrated sampling pump. This is a diaphragm type pump that provides a 500-600 cc per minute flow rate. Connecting a Teflon or metal tubing with 1/8 inch inside diameter to the gas inlet port of the MiniRAE 2000, this pump can pull in air samples from 200 feet away horizontally, or 90 feet vertically, at about 3 feet per second flow speed.

The pump turns on when a measurement is started, and turns off when the sample is manually stopped in Survey mode or when the unit is turned off from Hygiene Mode.

If liquid or other objects are pulled into the inlet port filter, the monitor will detect the obstruction and shut down the pump immediately. The alarm will be activated and a flashing error message "Pump" will be also displayed on the LCD display.

The user should acknowledge the pump shut off condition by clearing the obstruction and pressing the **[Y/+]** key to re-start the pump.

The pump stall threshold is set in the special Diagnostic Mode (Section 8).

2.8 Back Light

The LCD display is equipped with an LED back light to assist in reading the display under poor lighting conditions. Pressing and holding the **[N/-]** key for one second in normal operation can turn on the backlight. The backlight can be turned off by pressing **[N/-]** a second time. If the **[N/-]** key is not pressed, the back light will be turned off automatically after a pre-programmed time-out period to save power.

In addition, the ambient light is sensed and the back light will be turned on automatically if the ambient light is below a threshold level. The back light is turned off automatically when the ambient light exceeds the threshold level.

See Section 8 for instructions on how to set the light threshold level.

Note: The LED backlight consumes about 20-30% of the total average current, when the instrument is idle or not taking a measurement.

2.9 Datalogging

During datalogging, the MiniRAE 2000 Portable VOC monitor flashes a superscript "L", on the display to indicate that datalogging is enabled. The monitor stores the time stamp, sample number, and measured gas concentration at the end of every sample period (when data logging is enabled). In addition, the following information are stored: user ID, site ID, serial number, last calibration date, and alarm limits. All data are retained (even after the unit is turned off) in non-volatile memory so that it can be down loaded at a later time to a PC.

Datalogging event

When Datalogging is enabled, measurement readings are being saved. These data are stored in "groups" or "events. A new event is created and stored each time the monitor is turned on, or a configuration parameter is changed, or datalogging is interrupted (e.g. Communication with PC during Hygiene mode). Information, such as start time, user ID, site ID, gas name, serial number, last calibration date, and alarm limits will be recorded.

Datalogging sample

After an event is recorded, the unit records a shorter form of the data. This data contains: the sample number, time (hour/minute) and gas concentration.

3. OPERATION OF ACCESSORIES

The accessories for the MiniRAE 2000 include:

- An AC Adapter (Battery Charger)
- Alkaline battery holder
- Water Trap Filter

Optional Accessories:

- Dilution Fitting
- Calibration adapter
- Calibration regulator and Flow controller
- Organic Vapor Zeroing kit

3.1 Standard Kit and Accessories

1) AC Adapter (Battery Charger)

WARNING

To reduce the risk of ignition of hazardous atmospheres, recharge battery only in area known to be non-hazardous. Remove and replace battery only in area known to be non-hazardous.

Ne charger les batteries que dans emplacements designés non-dangereuses.

A battery charging circuit is built into the MiniRAE 2000 monitor. It only needs a regular AC to 12 V DC adapter (wall mount transformer) to charge the monitor.

To charge the battery inside the MiniRAE 2000 monitor:

1. Power off the Monitor.
2. Connect the AC adapter (or the optional automotive charging adapter) to the DC jack on the MiniRAE 2000 monitor. If the unit was off, it will automatically turn on.
3. The first message displayed will be "Deep discharge?" The unit will ask this question for three times. If the user wants to discharge the battery pack, affirm this query with the **[Y/+]** key, otherwise the unit will move on to the charge mode directly.

4. While charging, the display message will alternate between "Charging" and "Bat=x.xV" (x.x is the present battery voltage). The LED should be red in color when charging.

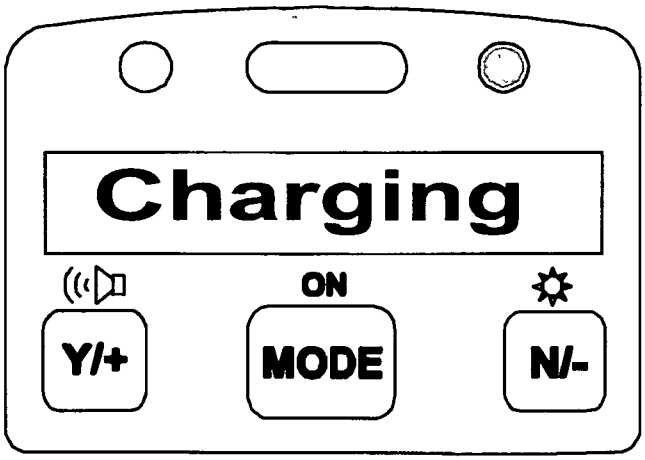

5. When the battery is fully charged, the LED will change from red to green and the message "Fully charged" will appear on the display. After the battery is fully charged, the unit will enter the "trickle charge" mode. In which, the red LED will turn on for several seconds every minute, to maintain the full charge.

A completely discharged MiniRAE 2000 monitor will be charged to full capacity within 10 hours. The battery will be drained slowly even if the monitor is turned off. If the monitor has not been charged for 7-10 days, the battery voltage will be low.

The factory-supplied battery is designed to last for 10 hours of normal operation (no alarm, no back light condition), for a new battery under the best condition. As the battery becomes older or is subject to adverse conditions (such as cold ambient temperature), the battery capacity will be reduced significantly.

2) Alkaline Battery Holder

An alkaline battery holder is supplied with each MiniRAE 2000. It accepts four AA size alkaline batteries and can be used in place of the Ni-MH or Ni-Cd battery pack to provide approximately 12-14 hours of operation. The adapter is intended to be used in emergency situations when there is no time to charge the Ni-Cd or Ni-MH battery pack.

To install the adapter, remove the cover of the battery compartment. Remove the Ni-Cd or Ni-MH battery pack from the battery compartment and replace with the alkaline battery adapter. Replace the battery compartment cover.

The internal charging circuit is designed to prevent damage to alkaline batteries and the charging circuit when alkaline batteries are installed inside the monitor.

***Note*:** The AA Alkaline battery adapter supplied by RAE Systems Inc. is intrinsically safe!

3) Water Trap Filter

The water trap filter is made of PTFE (Teflon®) membrane with a 0.45 micron pore size to prevent water from being sucked into the sensor manifold, which would cause extensive damage to the monitor. It will also remove any dust and other particles from entering the monitor and prolong the operating life of the sensor. To install the water trap, simply insert it to the front of the inlet tube of the MiniRAE 2000 monitor.

3.2 Optional Accessories

1) Dilution Fitting

The user may wish to install a dilution fitting on the inlet to dilute the gas samples. One application for a dilution fitting is to measure organic gas when the concentration exceeds the upper limit of the sensor range.

Make sure to set the dilution ratio in the programming mode (see Section 4.7.9) so that the correct gas reading will be displayed when the dilution fitting is used.

WARNING: To use a dilution fitting, the user must have the monitor located in a clean atmosphere outside the confined space and use a remote access probe or Tygon tubing to measure the gas concentration inside the confined space.

2) Calibration Adapter

The calibration adapter for the MiniRAE 2000 is a simple 6-inch Tygon tubing with a metal adapter on one end. During calibration, simply insert the metal adapter into the regular gas inlet probe of the MiniRAE 2000 and the tubing to the gas regulator on the gas bottle.

3) Calibration Regulator and Flow Controller

The Calibration Regulator and Flow controller is used in the calibration process. It regulates the gas flow rate from the Span gas cylinder into the gas inlet of the MiniRAE 2000 monitor during calibration process. The maximum flow rate allowed by the flow controller is about 0.5L/min (500 cc per min.). Alternatively, a Demand-flow Regulator or a Tedlar gas bag may be used to match the pump flow precisely.

4) Organic Vapor Zeroing kit (Charcoal filter)

The Organic Vapor Zeroing Kit is used for filtering organic air contaminants that may affect the zero calibration reading. To use the Organic Vapor Zeroing Kit, simply connect the filter to the inlet port of the MiniRAE 2000.

4. PROGRAMMING OF MINIRAE 2000

The MiniRAE 2000 Monitor is built with a microcomputer to provide programming flexibility. Authorized users can re-calibrate the monitor, change the alarm limits, change site ID, user ID, lamp type, and real time clock, etc.

Programming is menu-driven to provide intuitive end-user operation. The display shows the menu options and the key pad used for menu selection and data entry.

4.1 Programming Mode

The programming mode allows the users to change the setups in the monitor, calibrate the monitor, modify the sensor configuration and enter user information, etc. The programming mode has four menu items. Each menu item includes several sub-menus to perform additional programming functions. Appendix A shows a more detailed menu tree structure.

Programming Menu

Calibrate/Select Gas?

Change Alarm Limits?

Change Datalog?

Change Monitor Setup?

Once inside the programming mode, the LCD will display the first menu. Each subsequent menu item can be viewed by pressing the **[N/-]** repeatedly until the desired menu is displayed. To enter the sub-menu of a particular menu, press **[Y/+]** key, the sub-menu will be displayed.

Return to Operation mode: To exit the programming mode and return to operation, press the **[MODE]** key once at any of the programming menu displays.

4.2 Keys for Programming Mode

The three keys perform a different set of functions during the programming mode as summarized below.

Key	Function in Programming Mode
[MODE]:	Exit menu when pressed momentarily or exit data entry mode when pressed and held for 1 second
[Y/+]:	Increase alphanumerical value for data entry or confirm (yes) for a question
[N/-]:	Decrease alphanumerical value for data entry or deny (no) for a question

4.3 Entering into Programming Mode

1. Turn on the MiniRAE 2000 monitor and wait for the **"Ready.."** message or the instantaneous reading display **"0.0 ppm"** message displayed.
2. Press and hold down both **[N/-]** and **[MODE]** keys for three seconds to enter programming mode. This delay is to prevent the user from entering programming mode by accident.
3. The first menu item "Calibrate/select Gas?" will be displayed.
4. Release both **[MODE]** and **[N/-]** keys simultaneously to start the programming mode
5. Press **[N/-]** key to scroll to the next menu item of the programming menu. Press **[Y/+]** key to select the displayed menu item.

The following Sections 4.4 - 4.7 describe the details of each menu options.

4.4 Calibrate and Select Gas

WARNINGS

The calibration of all newly purchased RAE Systems instruments should be tested by exposing the sensor(s) to known concentration calibration gas before the instrument is put into service for the first time.

For maximum safety, the accuracy of the MiniRAE 2000 should be checked by exposing it to known concentration calibration gas before each day's use.

In the first menu of the programming mode, the user can perform functions such as calibration of the MiniRAE 2000 Monitor, select default cal memories, and modify cal memories (see Table 4.4).

Table 4.4

Calibrate/Select Gas Sub-Menu
Fresh Air Cal?
Span Cal?
Select Cal Memory?
Change Span Value?
Modify Cal Memory?
Change Correction Factor?

Calibrating the MiniRAE 2000 monitor is a two-point process using "fresh air " and the standard reference gas (also known as span gas). First a "Fresh air" calibration, which contains no detectable VOC (0.0 ppm), is used to set the zero point for the sensor. Then a standard reference gas that contains a known concentration of a given gas is used to set the second point of reference.

Note: The span value must be set prior to calibrating for fresh air or span.

The user can store calibrations for up to 8 different measurement gases. The default gas selections are as follows:

Cal Memory #0.....Isobutylene

Cal Memory #1.....Hexane

Cal Memory #2.....Xylene

Cal Memory #3.....Benzene

Cal Memory #4.....Styrene

Cal Memory #5.....Toluene

Cal Memory #6.....Vinyl Chloride

Cal Memory #7.....Custom?

Memory #0 functions differently than the other 7 memories. For Memory #0, isobutylene is always the calibration gas. When the gas is changed in Memory #0 to one of 100 other preprogrammed chemicals or to a user-defined custom gas, a correction factor is applied to all the readings. During calibration, the unit requests isobutylene gas and displays the isobutylene concentration immediately following calibration, but when the unit is returned to the normal reading mode, it displays the selected gas and applies the correction factor.

The other 7 cal memories require the same calibration gas as the measurement gas. These memories may also be modified to a preprogrammed chemical or to a user-defined custom gas. In the gas library, only the gases that can be detected by the installed UV lamp will actually be displayed. Note that although the correction factor for the new gas will be displayed and can be modified, this factor is not applied when Memories #1-7 are

used. Therefore the factor will not affect the readings in these memories.

Once each of the memories has been calibrated, the user can switch between the calibrated gases by changing the cal memory without the need to recalibrate. Or the user can switch the measurement gas in Memory #0 and the appropriate correction factor will automatically be applied without the need to recalibrate. If the gas is changed in Memories #1-7, it is necessary to recalibrate.

To change a default gas from the list above to a library or custom gas, first go to Select Cal Memory (Section 4.4.3) and then proceed to Modify Cal Memory (Section 4.4.5) to enter the desired gas. If the desired compound does not appear in the preprogrammed library, the user can use the Custom_VOC entry in the library, or the name and correction factor of any of the existing compounds can be changed as described in Section 4.4.5. A list of some 300 correction factors is given in Technical Note 106, available at the website www.raesystems.com.

4.4.1 Fresh Air Calibration

This procedure determines the zero point of the sensor calibration curve. To perform a fresh air calibration, use the calibration adapter to connect the MiniRAE 2000 to a "fresh" air source such as from a cylinder or Tedlar bag (option accessory). The "fresh" air is clean dry air without any organic impurities. If such an air cylinder is not available, any clean ambient air without detectable contaminant or a charcoal filter can be used.

1. The first sub-menu shows: "Fresh air Cal?"
2. Make sure that the MiniRAE 2000 is connected to one of the "fresh" air sources described above.
3. Press the **[Y/+]** key, the display shows "zero in progress" followed by "wait.." and a countdown timer.

After about 15 seconds pause, the display will show the message "update data...zeroed... reading = X.X ppm..." Press any key or wait about 20 seconds, the monitor will return back to "Fresh air Calibration?" submenu.

4.4.2 Span Calibration

This procedure determines the second point of the sensor calibration curve for the sensor. A cylinder of standard reference gas (span gas) fitted with a 500 cc/min. flow-limiting regulator or a flow-matching regulator is the simplest way to perform this procedure. Choose the 500 cc/min. regulator only if the flow rate matches or slightly exceeds the flow rate of the instrument pump. Alternatively, the span gas can first be filled into a Tedlar Bag, or delivered through a demand-flow regulator. Connect the calibration adapter to the inlet port of the MiniRAE 2000 Monitor, and connect the tubing to the regulator or Tedlar bag.

Another alternative is to use a regulator with >500 cc/min flow but allow the excess flow to escape through a T or an open tube. In the latter method, the span gas flows out through an open tube slightly wider than the probe, and the probe is inserted into the calibration tube.

Before executing a span calibration, make sure the span value has been set correctly (see next sub-menu).

1. Make sure the monitor is connected to one of the span gas sources described above.
2. Press the **[Y/+]** key at the "Span Cal?" to start the calibration. The display shows the gas name and the span value of the corresponding gas.
3. The display shows "Apply gas now!" Turn on the valve of the span gas supply.

4. Display shows "wait.... 30" with a count down timer showing the number of remaining seconds while the monitor performs the calibration.
5. To abort the calibration, press any key during the count down. The display shows "Aborted!" and return to "Span Cal?" sub-menu.
6. When the count down timer reaches 0, the display shows the calibrated value.

   Note: The reading should be very close to the span gas value.
7. During calibration, the monitor waits for an increased signal before starting the countdown timer. If a minimal response is not obtained after 35 seconds, the monitor displays "No Gas!" Check the span gas valve is on and for lamp or sensor failure before trying again.
8. The calibration can be started manually by pressing any key while the "Apply gas now!" is displayed.
9. After a span calibration is completed, the display will show the message "Update Data Span Cal Done! Turn Off Gas."
10. Turn off the flow of gas. Disconnect the calibration adapter or Tedlar bag from the MiniRAE 2000 Monitor.
11. Press any key and it returns back to "Span Gas Cal?"

4.4.3 Select Cal Memory

This function allows the user to select one of eight different memories for gas calibration and measurement. For Memories #1-7, the calibration and measurement gas is the same and no correction factor is applied. For Memory #0, the calibration gas is always isobutylene and the measurement gas may be different, in which case the correction factor for that gas is automatically applied. The default gas selections are listed in Section 4.4

1. "Select Cal Memory?" is the third sub-menu item in the Calibration sub-menu. Pressing the **[Y/+]** key, the display will show "Gas =" gas name followed by "Mem # x?"
2. Press **[N/-]** to scroll through all the memory numbers and the gas selections respectively. Press **[Y/+]** to accept the displayed Cal Memory number.
3. After the **[Y/+]** key is pressed, the display shows "Save?" Press **[Y/+]** key to save and proceed. Press **[N/-]** to discard the entry and advance to the next sub-menu.
4. If the gas in a newly selected Cal Memory number is not calibrated, the display shows "CF= x.xx". A correction factor with the value "x.xx" will be applied.
5. If the gas of a newly selected cal memory number has been calibrated previously, the display shows "Last calibrated xx/xx/xx".

4.4.4 Change Span Value

This function allows the user to change the span values of the calibration gases.

1. "Change Span Value?" is the fourth sub-menu item in the Calibration sub-menu
2. Press **[Y/+]**, display shows the gas name and the span value. A cursor will blink at the first digit of the Span value. To modify the span gas value, go to Step 3. Otherwise, press and hold the **[MODE]** key for 1 second to accept the previously stored span gas value and move to the next sub-menu.
3. Starting from the left-most digit of the span gas value, use the **[Y/+]** or **[N/-]** key to change the digit value and press **[MODE]** key momentarily to advance to next digit. Repeat this process until all digits are entered. Press and hold the **[MODE]** for 1 second to exit.
4. The display shows "Save?" To accept the new value, press the **[Y/+]** key. Press the **[N/-]** key or the **[MODE]** key to discard the change and move to the next sub-menu.

4.4.5 Modify Cal Memory

If the current cal memory number selected is not memory 0, users will be prompted whether to modify the settings of the selected cal memory. Press **[Y/+]** to modify the cal memory and **[N/-]** to go to the next sub-menu.

Once **[Y/+]** is pressed the LCD display will show the current memory number, current Gas selected and prompt user for acceptance of current gas selected.

1. Press **[N/-]** to modify the gas selection if desired. Or press **[Y/+]** key to skip the change of gas selection, and proceed to the next sub-menu.
2. After pressing **[N/-]**, display shows "Copy gas from library?" Press **[Y/+]** to accept or **[N/-]** for the next sub-menu, "Enter Custom gas?"
3. In the "Copy gas from library" submenu, use **[Y/+]** and **[N/-]** keys to scroll through the selections in the library. Press **[MODE]** key momentarily to select the gas. The display shows "Save?" Press **[Y/+]** to save or **[N/-]** to discard the changes and proceed to next sub-menu.
4. In the Custom gas sub-menu, the user can enter the gas name. Press the **[Y/+]** or **[N/-]** key to cycle through all 26 letters and 10 numerals. Press the **[MODE]** key momentarily to advance to the next digit. The flashing digit will move to the next digit to the right. Repeat this process until all digits (up to 8 digits) of the custom gas name is entered.

Press and hold the **[MODE]** key for 1 second to exit the name entry mode. The display will show "Save?" Press **[Y/+]** to save the entry, or **[N/-]** to discard the changes.

4.4.6 Change Correction Factor

This function allows the user to change the Correction Factor of the standard calibration gas (only for Cal Memory #0).

1. "Change Correction Factor?" is the sixth sub-menu in the Calibration sub-menu.
2. Press **[Y/+]** key. Display shows the gas name, then the correction factor.

   A cursor blinks at the left-most digit of the correction factor. If user wants to modify the correction factor, go to Step 3. Otherwise, press and hold the **[MODE]** key for 1 second to accept the previously stored correction factor value and return to the first sub-menu of the calibrate/select gas menu.
3. Starting from the left-most digit of the correction factor, use **[Y/+]** or **[N/-]** key to change the digit value and press **[MODE]** key momentarily to advance to the next digit, the cursor will move to the next digit to the right. Repeat this process until all digits are entered. Press and hold the **[MODE]** for 1 second to exit.
4. The display shows "Save?" To confirm the new value, press **[Y/+]** to accept the change. Press **[N/-]** or **[MODE]** to discard the change and return to the first sub-menu, Calibrate and Select Gas.

4.5 Change Alarm Limits

In this menu, the user can change the high and low alarm limits, the STEL limit and the TWA limit (see Table 4.5 below). Press the **[Y/+]** key and the display shows the current gas selected followed by the first sub-menu item below.

Table 4.5

Alarm Limit Sub-Menu
Change High Alarm limit?
Change Low Alarm limit?
Change STEL limit?
Change TWA limit?

1. Scroll through the Alarm Limit sub-menu using the **[N/-]** key until the display shows the desired limit to be changed, e.g.,"High limit?", "STEL limit?", etc.

2. Press the **[Y/+]** key to select the desired limit and the display shows a flashing cursor on the left-most digit of the previously stored alarm limit.

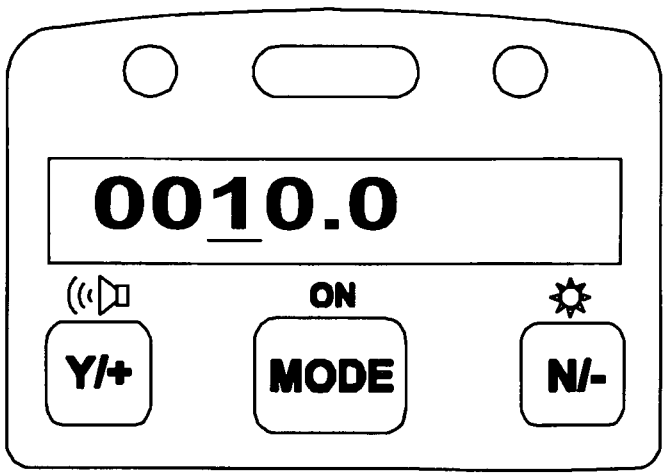

3. To modify this limit value, use the **[Y/+]** or **[N/-]** key to change the digit value and press the **[MODE]** key momentarily to advance to the next digit. The flashing digit will move to the next digit to its right. Repeat this process until the new limit value is entered. Press and hold the **[MODE]** key for 1 second to exit data entry mode.

4. If there is any change to the existing value, the display shows "Save?" Press **[Y/+]** to accept the new value and move to the next sub-menu. Press **[N/-]** to discard the changes and move to the next sub-menu.

4.5.1 Change Low Alarm Limit

The second sub-menu item in the Alarm Limit sub-menu allows the user to change the Low Alarm limit. The LCD displays "Low limit?" To change Low Alarm limit, press **[Y/+]** key, or Press **[N/-]** key advance to next sub-menu in Table 4.5.

1. Press **[Y/+]** and the display will show a flashing cursor on the left-most digit of the previously stored Low alarm limit.
2. To modify this limit value, use the **[Y/+]** or **[N/-]** key to change the digit value and press the **[MODE]** key momentarily to advance to the next digit. The flashing digit will move to the next digit to its right. Repeat this process until the new limit values is entered. Press and hold the **[MODE]** key for 1 second to exit data entry mode.
3. If there is any change to the existing value, the display shows "Save?" Press **[Y/+]** to accept the new value and move to the next sub-menu. Press **[N/-]** to discard the changes and move to the next sub-menu.

4.5.2 Change STEL Limit

This sub-menu item allows the user to change the STEL limit. The display shows "STEL limit?"

1. Press the **[Y/+]** key and the display will show a flashing cursor on the left-most digit of the previously stored STEL limit.
2. To modify this limit value, use the **[Y/+]** or **[N/-]** key to change the digit value and press the **[MODE]** key momentarily to advance to the next digit. The flashing digit will move on to next digit to its right. Repeat this process until the new limit values is entered. Press and hold the **[MODE]** key for 1 second to exit data entry mode.
3. If there is any change to the existing value, the display shows "Save?" Press **[Y/+]** to accept the new value and move to the next sub-menu. Press **[N/-]** to discard the changes and move to the next sub-menu.

4.5.3 Change TWA Limit

This sub-menu item allows the user to change the TWA limit. The LCD displays "TWA limit?"

1. Press **[Y/+]** and the display will show a flashing cursor on the left-most digit of the previously stored TWA limit.
2. To modify this limit value, use the **[Y/+]** or **[N/-]** key to change the digit value and press the **[MODE]** key momentarily to advance to the next digit. The flashing digit will move on to next digit to its right. Repeat this process until the new limit values is entered. Press and hold the **[MODE]** key for 1 second to exit data entry mode.
3. If there is any change to the existing value, the display shows "Save?" Press **[Y/+]** to accept the new value and move to the next sub-menu. Press **[N/-]** to discard the changes and move to the next sub-menu.

4.6 Change Datalog

The MiniRAE 2000 monitor calculates and stores the concentration and ID of each sample taken. In the datalog sub-menu, a user can perform the tasks and functions shown below.

Datalog Sub-Menu

Reset Peak/Minimum?

Clear Data?

Change Data Period?

Change Average Type?

4.6.1 Reset Peak

This function will reset the peak and minimum stored in the data memory. Note: this function will not clear the STEL or TWA data.

1. "Reset Peak?" is the first sub-menu item in the Datalog sub-menu (Table 4.6).
2. Press the **[Y/+]** key to reset the Peak/Minimum Values. The display shows "Are You Sure?"
3. Pressing the **[Y/+]** key again will reset the values. The display shows "Peak/Minimum Cleared" and moves to the next submenu.
4. Press the **[N/-]** or **[MODE]** key to exit without resetting the values and move to the next sub-menu.

4.6.2 Clear Data

This function will erase all data stored in the non-volatile datalog memory. Note: This function does not change STEL, TWA, Peak, Minimum and run time values, which are stored in the regular data memory.

1. "Clear Data?" is the third sub-menu item in the Datalog sub-menu.
2. Press the **[Y/+]** key to clear the datalog memory. The display shows "Are you sure?"
3. Press the **[Y/+]** key again to confirm erasure of all the datalog memory.
4. Press the **[N/-]** or **[MODE]** key to exit without clearing the datalog memory and move to the next datalog sub-menu.

4.6.3 Change Data Period

The datalog period can be programmed from 1 to 3,600 seconds (1 hour).

1. "Change Data Period?" is the fifth sub-menu item in the Datalog sub-menu.
2. Press the **[Y/+]** key and the display shows "Datalog Period = XXXX" with the left-most digit flashing, where "XXXX" is the previously stored data log period.
4. To modify this period, starting from the left-most digit, use the **[Y/+]** or **[N/-]** key to change the digit value and press the **[MODE]** key momentarily to advance to the next digit. The flashing digit will move to the next digit to the right. Repeat this process until all 4 digits of the new period are entered. Press and hold the **[MODE]** key for 1 second to exit data entry mode.
5. If there is any change to the existing value, the display will show "Save?" Press **[Y/+]** to accept the new value or **[N/-]** to discard the changes and move to the next sub-menu.

4.6.4 Change Average Type

The user can select either an 8-hour Time Weighted Average (TWA) or a running Average. The running average is simply the average of all instantaneous (1-second) readings since the measurement was started. This average may increase or decrease with time depending on the readings. The TWA is a cumulative value used to estimate the fraction of the 8-hour limit to which the user has been exposed since the start of the measurement. This value can only increase or remain constant, never decrease. Refer to Technical Note 119 for more information on how TWA is calculated.

1. "Change Average Type?" is the sixth sub-menu in the Datalog sub-menu.
2. Press the **[Y/+]** key to enter the function.
3. The display will show "Running Average?" or " Time Weighted Average?" depending on the current average type.
4. Press **[N/-]** key to toggle between the average types. Press **[Y/+]** key to select the displayed average type.
5. If there is any change to the existing setting, the display shows "Save?" Press **[Y/+]** to save the change. Press **[N/-]** or **[MODE]** to discard the change and return to the first sub-menu.

4.7 Change Monitor Setup

Several monitor specific variables can be changed in this menu. The following is a list of configuration data that can be modified by the user.

Monitor Setup Sub-Menu	Diagnostic Mode
Change Operation Mode?	"
Change Site ID?	Change Unit ID?
Change User ID?	Change Host ID?
Change Alarm Mode?	"
Change User Mode?	"
Change Date?	"
Change Time?	"
Change Lamp?	"
Change Pump Duty Cycle?	"
Change Unit?	"
Change Dilution Ratio?	"
Change Output?	"
Change DAC Range?	"
Set Temperature Unit?	"

4.7.1 Change Operation Mode

MiniRAE 2000 supports two operation modes: Survey and Hygiene mode.

Survey mode: Manual start/stop of measurements and display of certain exposure values.

Hygiene mode: Automatic measurements, running and datalogging continuously and calculates additional exposure values.

1. "Change Op Mode?" is the first sub-menu item in the Monitor Setup menu (Table 4.7).
2. Press the **[Y/+]** key and the display shows the current user mode: "Op Mode = *current mode*?"
3. Press the **[Y/+]** key to accept the currently displayed operation (Op) mode. Press **[N/-]** to toggle to the other operation mode. Press **[MODE]** to exit this sub-menu and move to the next monitor setup sub-menu.
4. When changing Op mode from Hygiene to Survey, the display shows the additional message "Warning! Exit Hygiene?" to prevent accidental exit from Hygiene mode. Press the **[Y/+]** key to acknowledge.
5. If there is any change to the existing setting, the display will show "Save?" Press the **[Y/+]** key to accept or the **[N/-]** key to discard and move to the next sub-menu.

Note: If a new Op Mode is saved, the display shows "Op Mode changed!!" when exiting the programming mode.

4.7.2 Change Site ID

The user can enter an 8-digit alphanumeric site ID in the programming mode. This site ID will be included in the datalog report.

1. "Change Site ID?" is the second sub-menu item in the Monitor Setup menu (Table 4.7).
2. Press the **[Y/+]** key and the display shows the current site ID: "Site ID = xxxxxxx" with the left most digit flashing.
3. Press the **[Y/+]** or **[N/-]** key to cycle through all 26 letters and 10 numerals. Press **[MODE]** momentarily to advance to the next digit. The flashing digit will move to the next digit to the right. Repeat this process until all 8 digits of the new site ID are entered.
4. Press and hold the **[MODE]** key for 1 second to exit the data entry mode.
5. If there is any change to the existing site ID, the display shows "Save?" Press the **[Y/+]** key to accept the new site ID. Press the **[N/-]** key to discard the change and move to the next sub-menu.

4.7.3 Change User ID

The user can enter an 8-digit alphanumeric user ID in the programming mode. This user ID will be included in the datalog report.

1. "Change User ID?" is the third sub-menu item the Monitor Setup menu.
2. Press the **[Y/+]** key and the display shows the current user ID: "User ID = xxxxxxxx" with the left most digit flashing.
3. Press the **[Y/+]** or **[N/-]** key to cycle through all 26 letters and 10 numerals. Press **[MODE]** momentarily to advance to the next digit. The flashing digit will move to the next digit to the right. Repeat this process until all 8 digits of the new user ID are entered.
4. Press and hold the **[MODE]** key for 1 second to exit the data entry mode.
5. If there is any change to the existing user ID, the display shows "Save?" Press the **[Y/+]** key to accept the new user ID. Or press the **[N/-]** key to discard the changes and move to the next sub-menu.

4.7.4 Change Alarm Mode?

There are two different alarm modes: **Latched** and **Automatic Reset** (Auto Reset) in the MiniRAE 2000 that can be selected from the programming menu.

1. "Change Alarm Mode?" is the fourth sub-menu item in the Monitor Setup menu.
2. Press the **[Y/+]** key; the display shows the current alarm mode.
3. Press the **[Y/+]** key to accept the currently displayed alarm mode. Press **[N/-]** key to toggle to the other alarm mode. Press **[MODE]** to exit this sub-menu and move to the next monitor setup sub-menu.
4. If there is any change to the existing setting, the display will show "Save?" Press **[Y/+]** to save the change. Press **[N/-]** or **[MODE]** to discard the change and move to the next sub-menu.

4.7.5 Change User Mode

There are two different user modes: **Display** and **Program** that can be selected from the programming menu.

1. "Change User Mode?" is the fifth sub-menu item in the Monitor Setup menu (Table 4.7).
2. Press the **[Y/+]** key; the display shows the current user mode selected.
3. Press the **[Y/+]** key to accept the currently displayed user mode. Press **[N/-]** key to toggle to the alternate user modes. Press **[MODE]** to exit this sub-menu and move to the next monitor setup sub-menu.
4. If there is any change to the existing selection, the display shows messages "Program change" and "Are you sure?" Press **[Y/+]** to confirm the change or press **[N/-]** or **[MODE]** to discard the changes and move to the next sub-menu.

CAUTION: If the user mode is changed to **Display** mode, the user can no longer enter the programming mode. Therefore, the user can not change the user mode back to **Program** mode in normal mode.

To restore the user mode back to **Program** mode, turn the unit off and back on in Diagnostic Mode. Next enter Program mode by holding the **[MODE] and [N/-]** keys for three seconds. Enter the password at the prompt (the default is 0000). Once program mode is entered, go to the "Change Monitor Setup" / "Change User Mode" and change the mode back to **Program.**

An alternative way to change Display mode back to Program mode is through the PC and the ProRAE-Suite software.

4.7.6 Change Date

The MiniRAE 2000 monitor is equipped with a real time clock (RTC). The user can enter the correct date and time (see 4.7.7) for the real time clock.

1. "Change Date?" is the sixth sub-menu item in the Monitor Setup menu.
2. Press **[Y/+]** and the display shows the current date "mm / dd / yy" with the left most digit of the date flashing.
5. To modify this value, use the **[Y/+]** or **[N/-]** key to change the digit value and press the **[MODE]** key momentarily to advance to the next digit. The flashing digit will move on to next digit to its right. Repeat this process until the new date and time values are entered. Press and hold the **[MODE]** key for 1 second to exit data entry mode.
4. If there is any change to the existing value, the display shows "Save?" Press **[Y/+]** to confirm the new value or press **[N/-]** or **[MODE]** to discard the changes and move to the next sub-menu.

4.7.7 Change Time

To change the time in the RTC of the MiniRAE 2000:

1. "Change Time?" is the seventh sub-menu item in the Monitor Setup menu.
2. Press **[Y/+]** and the display shows the current time in the 24-hour format "hh : mm" with the left most digit of the time flashing.
3. To modify this value, use the **[Y/+]** or **[N/-]** key to change the digit value and press the **[MODE]** key momentarily to advance to the next digit. The flashing digit will move on to next digit to its right. Repeat this process until the new date and time values are entered. Press and hold the **[MODE]** key for 1 second to exit data entry mode.
4. If there is any change to the existing value, the display shows "Save?" Press **[Y/+]** to confirm the new value or press **[N/-]** or **[MODE]** to discard the changes and move to the next sub-menu.

4.7.8 Change Lamp

There are three UV lamps with different photon energies available for the PID sensor: **9.8 eV, 10.6 eV** and **11.7 eV**. The user can select any one of the lamps from the programming mode.

1. "Change Lamp Type?" is the eighth sub-menu item in the Monitor Setup menu (Table 4.7).
2. Press the **[Y/+]** key; the display shows the current PID lamp selection.
3. Press the **[Y/+]** key to accept the currently displayed lamp. Press **[N/-]** key to scroll through the sub-menu for other lamp selections. Press **[MODE]** to exit this sub-menu and return to the next sub-menu in Table 4.7.
4. If there is any change to the existing selection, the display will show "Save?" Press **[Y/+]** to save the new selection or press **[N/-]** or **[MODE]** to discard the change and return to the next sub-menu in Table 4.7.

4.7.9 Change Unit

User can change the display and datalog unit from parts per million (ppm) to milli-gram per cubic meter (mg/m^3).

1. "Change Unit?" is the ninth sub-menu item in the Monitor Setup sub-menu.
2. Press the **[Y/+]** key, the display should show the current unit "Display Unit = ppm?" or "Display Unit = mg?"
3. Press **[Y/+]** key to accept the currently displayed unit. Press **[N/-]** key to toggle to the other unit. Press **[MODE]** key to exit this sub-menu.
4. If there is any change to the existing selection, press **[Y/+]** to confirm the new selection or press **[N/-]** or **[MODE]** to discard the changes and move to the next sub-menu.

Caution:

1. **The correction factor in the gas library is calculated based on "ppm" unit. If "mg" unit is selected, the built-in correction factor library is not valid.**
2. **No automatic conversion between "ppm" and "mg/m^3" reading is performed by the monitor.**
3. **When the unit name is changed from "ppm" to "mg", the unit must be recalibrated with the span gas concentration entered in mg/m^3. The converse rule applies when the unit is changed from "mg" to "ppm".**

4.7.10 Change Dilution Ratio

If a dilution system is used upstream of the MiniRAE 2000 inlet port, the user can enter the dilution ratio (from 1 to 10) to compensate the readings. The unit will then display the actual concentration of the gas before dilution. The dilution ratio should be 1 in normal operation where no dilution gas is applied to the sample gas. Dilution improves accuracy and linearity when the concentrations are above a few thousand ppm.

1. "Change Dilution Ratio?" is the tenth sub-menu item in the Monitor Setup menu.
2. Press the **[Y/+]** key; the display shows the current dilution ratio: "Dilution Ratio = xx" with the left most digit flashing.
3. Press the **[Y/+]** or **[N/-]** key to increase or decrease the value of the digit. Press **[MODE]** momentarily to advance to the next digit. The flashing digit will move to the next digit to the right. Repeat this process until both digits of the new dilution ratio are entered.
4. Press and hold the **[MODE]** key for 1 second to exit the data entry mode and move to the next sub-menu.
5. If there is any change to the existing dilution ratio, the display shows "Save?" Press **[Y/+]** to confirm the new value or press **[N/-]** or **[MODE]** to discard the changes and move to the next sub-menu.

4.7.11 Change Output?

There are two different external output options: DAC (Analog output) and Alarm in the MiniRAE 2000 that can be selected from the programming menu. The alarm output can be used to connect to the optional vibration alarm (vibrator) only. The analog output, which is proportional to the gas concentration, can be connected a chart recorder or can be queried by a computer to download data in real time (see Technical Note 141).

1. "Change External Output?" is the eleventh sub-menu item in the Monitor Setup menu.
2. Press the **[Y/+]** key and the display shows the current output option selection: "Output = DAC?"
3. Press the **[Y/+]** key to accept the currently displayed output option. Press **[N/-]** to change to the other external option: "Output = Alarm?" Press **[MODE]** to exit this sub-menu and move to the next monitor setup sub-menu.
4. If there is any change to the existing selection the display will show "Save?" Then, press **[Y/+]** to save the change, press **[N/-]** to go back to Step 2, or press **[MODE]** to exit this sub-menu and move to the next monitor setup sub-menu.

4.7.12 Change DAC Range?

There are four different DAC (Digital-to-Analog Conversion) range values available in the **MiniRAE 2000: 20, 200, 2000** and **10K ppm**. The maximum 2.5V DC analog signal output from the unit will represent the range value chosen. (See for analog signal output connection.)

1. "Change DAC Range?" is the twelfth sub-menu item in the Monitor Setup menu.
2. Press the **[Y/+]** key, the display shows the current DAC Range value: "DAC Range = 2000 ppm?"
3. Press the **[Y/+]** key to accept the currently displayed value. Press **[N/-]** to scroll through the sub-menu for other range values. Press **[MODE]** to exit this sub-menu and return to the first sub-menu in Table 4.7.
4. If there is any change to the existing selection, press the **[Y/+]** key and the display will show "Save?" Press the **[Y/+]** key to save the change or press the **[N/-]** key to discard and return to the first sub-menu in Table 4.7.

4.7.13 Set Temperature Unit?

The temperature display can be switched between Fahrenheit and Celsius units.

1. "Set Temperature Unit?" is the thirteenth sub-menu item in the Monitor Setup menu.
2. Press the **[Y/+]** key, and the display shows the current setting: "Temperature Unit = Fahrenheit?"
3. Press the **[Y/+]** key to accept the currently displayed value. Press **[N/-]** to select the sub-menu "Temperature Unit = Celsius?" Press **[MODE]** to exit this sub-menu and return to the first sub-menu in Table 4.7.
4. If there is any change to the existing selection, press the **[Y/+]** key and the display will show "Save?" Press the **[Y/+]** key to save the change and return to the first sub-menu in Table 4.7 or press the **[N/-]** key to discard and return to Step 3..

4.8 Exit Programming Mode

1. To exit programming mode from the first tier menu level, press the **[MODE]** key once.
2. To exit programming mode from 2nd tier sub-menu, press the **[MODE]** key twice.
3. To return to programming mode, press and hold down both the **[MODE]** and **[N/-]** keys for 3 seconds.

5. THEORY OF OPERATION

The MiniRAE 2000 monitor uses a newly developed electrodeless discharge UV lamp as the high-energy photon source for the PID. As organic vapors pass by the lamp, they are photo-ionized and the ejected electrons are detected as a current. The PID sensor with a standard 10.6 eV lamp detects a broad range of organic vapors. A lamp with high photon energy (e.g. 11.7 eV) will measure the more kinds of compounds, whereas low photon energies (e.g. 9.8 eV) are selective for easily ionizable compounds such as aromatics. In principle, any compound with an ionization energy lower than that of the lamp photons can be measured.

The PID sensor for the MiniRAE 2000 monitor is constructed as a small cavity in front of the UV lamp. A diaphragm pump draws the gas sample into the sensor and then pumps it out through the side of the instrument.

Figure 5-1 MiniRAE 2000 Block Diagram

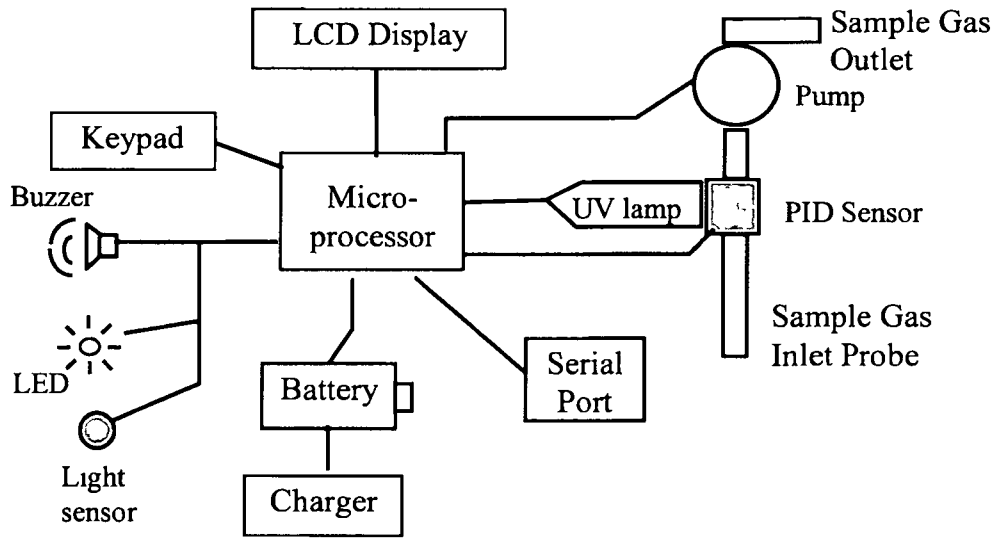

A single chip microcomputer is used to control the operation of the alarm buzzer, LED, pump and light sensor. It measures the sensor readings and calculates the gas concentrations based on calibration to known standard gases. The data are stored in non-volatile memory so that they can be sent to a PC for record keeping. RS-232 transceivers provide a serial interface between the monitor and the serial port of a PC. An LCD display consisting of a single row of eight alpha/numeric characters is used to display the readings. The user interacts with the monitor through three keys on the front panel keypad.

A rechargeable NiMH, NiCd battery, or an alkaline battery pack powers the monitor.

6. MAINTENANCE

The major maintenance items of the MiniRAE 2000 are:

- Battery pack
- Sensor module
- PID lamp
- Sampling pump
- Inlet connectors and filters

Note: Maintenance should be performed by qualified personnel only.

NOTE: The printed circuit board of the monitor is connected to the battery pack even if the power is turned off. Therefore, it is very important to disconnect the battery pack before servicing or replacing any components inside the monitor. Severe damage to the printed circuit board or battery may occur if the battery pack is not disconnected before servicing the unit.

6.1 Battery Charging and Replacement

When the display shows a flashing message "Bat", the battery requires recharging (see Section 3.1 for Battery charging). It is recommended to recharge the MiniRAE 2000 monitor upon returning from fieldwork. A fully charged battery runs a MiniRAE 2000 monitor for 10 hours continuously. The charging time is less than 10 hours for a fully discharged battery. The built-in charging circuit is controlled by the micro-controller to prevent over-charging. The battery may be replaced in the field (in area known to be non-hazardous) if required.

WARNING

To reduce the risk of ignition of hazardous atmospheres, recharge battery only in area known to be non- hazardous. Remove and replace battery only in area known to be non-hazardous.

Replacing Battery Pack

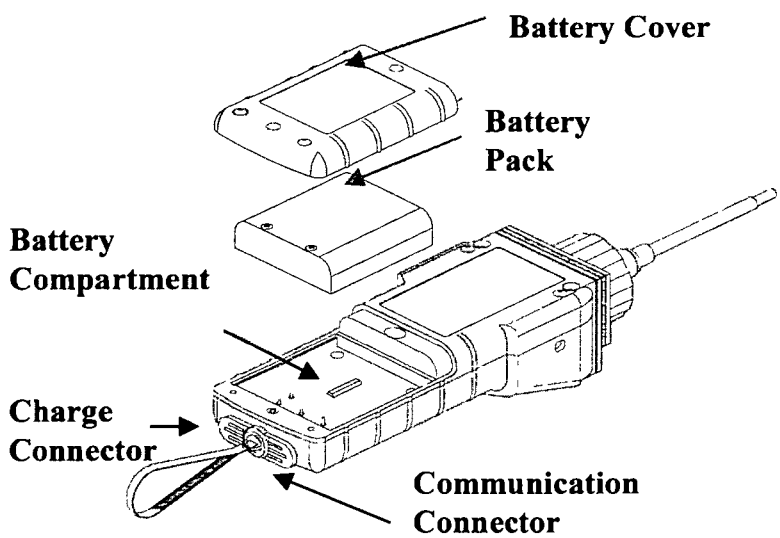

Figure 6-1 Battery Replacement

1.

Turn off the power of the MiniRAE 2000.

2. Unscrew the two battery compartment screws, located on the bottom of the monitor, and remove the cover.
3. Remove the battery pack from the battery compartment.
4. Replace a fully charged spare battery pack inside the battery compartment. Make sure the battery pack is oriented properly inside the compartment
5. Close the battery cover and tighten the two screws.

Replacing Alkaline Battery Adapter

1. Insert four fresh AA size alkaline batteries into the alkaline battery holder. Make sure that the polarity of the batteries is correct.
2. Follow the same procedure as described above to replace the battery holder.

Note: The internal charging circuit is designed to prevent charging to alkaline batteries.

6.2 PID Sensor & Lamp Cleaning/Replacement

The sensor module is made of several components and is attached to the lamp-housing unit as shown in Figure 7-2.

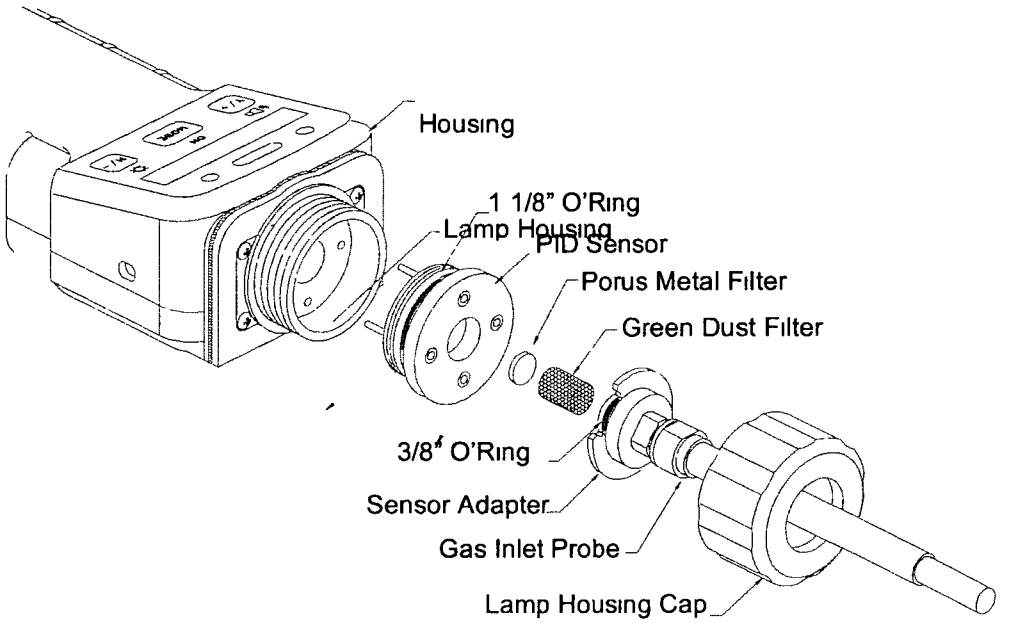

Figure 7-2 Sensor Components

Note: Normally the cleaning procedure is not needed. Clean the PID sensor module, the lamp and the lamp housing only when one of the following happened:

1. The reading is inaccurate even after calibration.
2. The reading is very sensitive to air moisture.
3. A chemical liquid has been sucked into the unit and damaged the unit.

Use of the water trap filter will help prevent contamination and accidentally drawing liquid into the sensor.

To access the sensor components and lamp, gently unscrew the lamp-housing cap, remove the sensor adapter with the gas inlet probe and the metal filter all together. Then hold the PID sensor and pull straight out to avoid bending the electrical pins on the sensor (see Figure 7-2). A slight, gentle rocking motion helps release the sensor.

To clean the PID sensor:

Place the entire PID sensor module into GC grade methanol. It is highly recommended that an ultrasound bath to be used to clean the sensor for at least 15 minutes. Then dry the sensor thoroughly. Never touch the electrodes of the sensor by hand.

Also use a methanol-soaked cotton swab to wipe off the lamp housing where it contacts the sensor when the sensor is installed.

Turn over the sensor so that the pins point up and the sensor cavity is visible. Examine the sensor electrodes for any corrosion, damage, or bending out of alignment. The metal sensor electrode "fingers" should be flat and straight. If necessary, carefully bend the sensor fingers to ensure that they do not touch the Teflon portions and that they are parallel to each other. Make sure that the nuts on the sensor pins are snug but not overtight. If the sensor is corroded or otherwise damaged, it should be replaced.

To clean lamp housing or change the lamp:

To clean lamp housing or change the lamp:

If the lamp does not turn on, the monitor will display an error message to indicate replacement of the lamp may be required.

1. If the lamp is operational, clean the lamp window surface and the lamp housing by wiping it with GC grade methanol using a cotton swab using moderate pressure. After cleaning, hold the lamp up to the light at an angle to detect any remaining film. Repeat the process until the lamp window is clean. Never use water solutions to clean the lamp. Dry the lamp and the lamp housing thoroughly after cleaning.

   CAUTION: Never touch the window surface with the fingers or anything else that may leave a film. Never use acetone or aqueous solutions.

2. If the lamp does not turn on, remove the lamp from the lamp housing. Place the lamp O-ring onto the new lamp. Insert the new lamp, avoiding contact with the flat window surface.
3. Reinstall the PID sensor module.
4. Tighten the Lamp Housing Cap.
5. If the lamp type has been changed, adjust the lamp type setting in the programming mode (Section 4.7.8).

6.3 Sampling Pump

When approaching the end of the specified lifetime of the pump, it will consume higher amount of energy and reduce its sample draw capability significantly. When this occurs, it is necessary to replace or rebuild the pump. When checking the pump flow, make sure that the inlet connector is tight and the inlet tubing is in good condition. Connect a flow meter to the gas inlet probe. The flow rate should be above 450 cc/min when there is no air leakage.

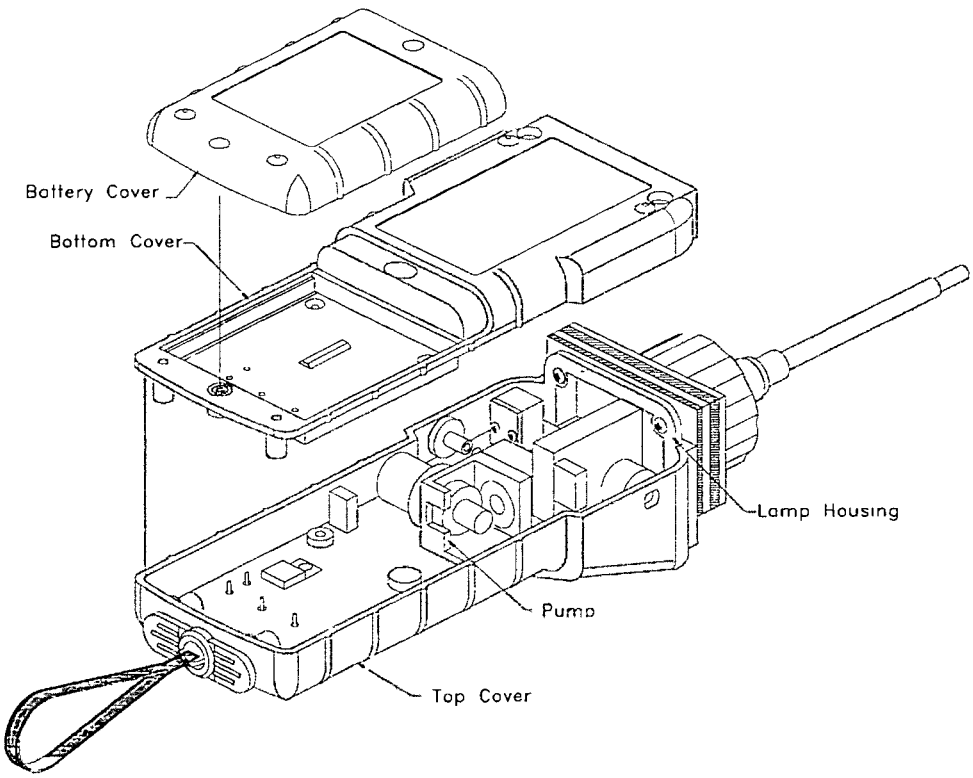

Figure 7-3 Sampling Pump

Pump Replacement

1. Turn off the MiniRAE 2000 power.
2. Open the battery cover, remove the battery pack, and carefully unscrew the six screws to open the bottom cover.
3. Unplug the pump from the PCB. Unscrew the two screws that hold the pump assembly to the PCB. Disconnect the Tygon tubing that connects the pump to the gas inlet port and gas outlet port.
4. Insert a new pump assembly. Connect the Tygon tubing to the gas inlet port. Plug the pump connector back into the PCB and screw down the pump assembly to the board.
5. Replace the bottom cover and tighten the six screws. Reconnect the battery pack. Replace the battery pack and its cover.

6.4 Turning on the UV Lamp

The UV lamp is made of a glass envelope and a UV window (salt crystal) on one end of the envelope. The inside of the lamp is filled with low pressure gases. To turn on the lamp, a high voltage electric field is applied from the outside of the glass envelope. The molecules inside the lamp are ionized and produce a glow discharge that generates the UV light. The MiniRAE 2000 has a built-in sensing mechanism to monitor the status of the UV lamp and display a "Lamp" error message if it is not on.

If the UV lamp has not been used for a long period of time (> 1 month) or is cold, it may become slightly harder to turn on. If such a condition occurs, the "Lamp" message will appear in the monitor display during the power on sequence. This phenomenon is more significant in 0.25" UV lamps used in ToxiRAE and MultiRAE Plus products, because of the relatively small lamp size. To solve this problem, simply turn on and off the monitor a few times and the lamp should turn on. After the UV lamp is turned on for the first time, it should be easier to turn on the UV lamp next time.

It is possible that the UV lamp is actually on when the lamp error message appears. This is because when the lamp becomes old, the internal threshold level to detect lamp failure may have shifted and cause a false alarm. To eliminate such possibility, simply check to see the UV lamp is actually on. This can be done easily by removing the sensor cap and observing the glow light of the UV lamp in a dark place. The user can also feed the monitor with calibration gas and observe if the sensor reading changes. If the reading changes significantly with the gas, the UV lamp is actually on.

A possible failure mechanism for the UV lamp is a leak developed along the seal of the glass envelope. When such condition occurs, the lamp will become very hard or impossible to turn on and will need to be replaced.

7.1 Troubleshooting Table

Problem	Possible Reasons & Solutions
Cannot turn on power after charging the battery	**Reasons:** Discharged battery Defective battery. Microcomputer hang-up. **Solutions:** Charge or replace battery. Disconnect, then connect battery to reset computer.
No LCD back light	**Reasons:** Trigger level too low, the current mode is not user mode, and the mode does not support automatic turn on back light. **Solutions:** Adjust trigger level. Verify the back light can be turned on in user mode. Call authorized service center.
Lost password	**Solutions:** Call Technical Support at +1.408 .752 .0723 or +1. 888 .723 .4800
Reading abnormally High	**Reasons:** Dirty sensor module. Dirty water trap filter Excessive moisture and water condensation. **Solutions:** Clean sensor module and lamp housing. Replace water trap filter. Blow dry the sensor module.
Buzzer Inoperative	**Reasons:** Bad buzzer. **Solutions:** Call authorized service center.

Inlet flow too low	**Reasons:**	Pump diaphragm damaged or has debris. Flow path leaks
	Solutions:	Check flow path for leaks; sensor module O-ring, tube connectors, Teflon tube compression fitting. Replace pump or diaphragm.
"Lamp" message during operation	**Reasons:**	Lamp drive circuit. Weak or defective PID lamp, defective.
	Solutions:	Turn the unit off and back on Replace UV lamp
Full scale measurement in humid environment	**Reasons:**	Dirty or wet sensor.
	Solutions:	Clean and dry sensor and lamp housing. Adjust sensor fingers to ensure not touching Teflon. Use water trap filter.
Reading abnormally low	**Reasons:**	Incorrect calibration. Low sensitivity to the specific gas. Weak or dirty lamp. Air leakage.
	Solutions:	Calibrate the monitor. Replace sensor. Clean or replace lamp. Check air leakage.

Inlet flow too low	**Reasons:**	Pump diaphragm damaged or has debris. Flow path leaks.
	Solutions:	Check flow path for leaks; sensor module O-ring, tube connectors, Teflon tube compression fitting. Replace pump or diaphragm.
"Lamp" message during operation	**Reasons:**	Lamp drive circuit. Weak or defective PID lamp, defective.
	Solutions:	Turn the unit off and back on Replace UV lamp
Full scale measurement in humid environment	**Reasons:**	Dirty or wet sensor
	Solutions:	Clean and dry sensor and lamp housing. Adjust sensor fingers to ensure not touching Teflon Use water trap filter
Reading abnormally low	**Reasons:**	Incorrect calibration Low sensitivity to the specific gas. Weak or dirty lamp. Air leakage.
	Solutions:	Calibrate the monitor. Replace sensor. Clean or replace lamp. Check air leakage.

APPENDIX A. QUICK REFERENCE GUIDE

Press [N/-] and [MODE], simultaneously, for 3 seconds, to enter Programming Mode. Press [MODE] to return to Survey Mode.

PROGRAMMING MODE

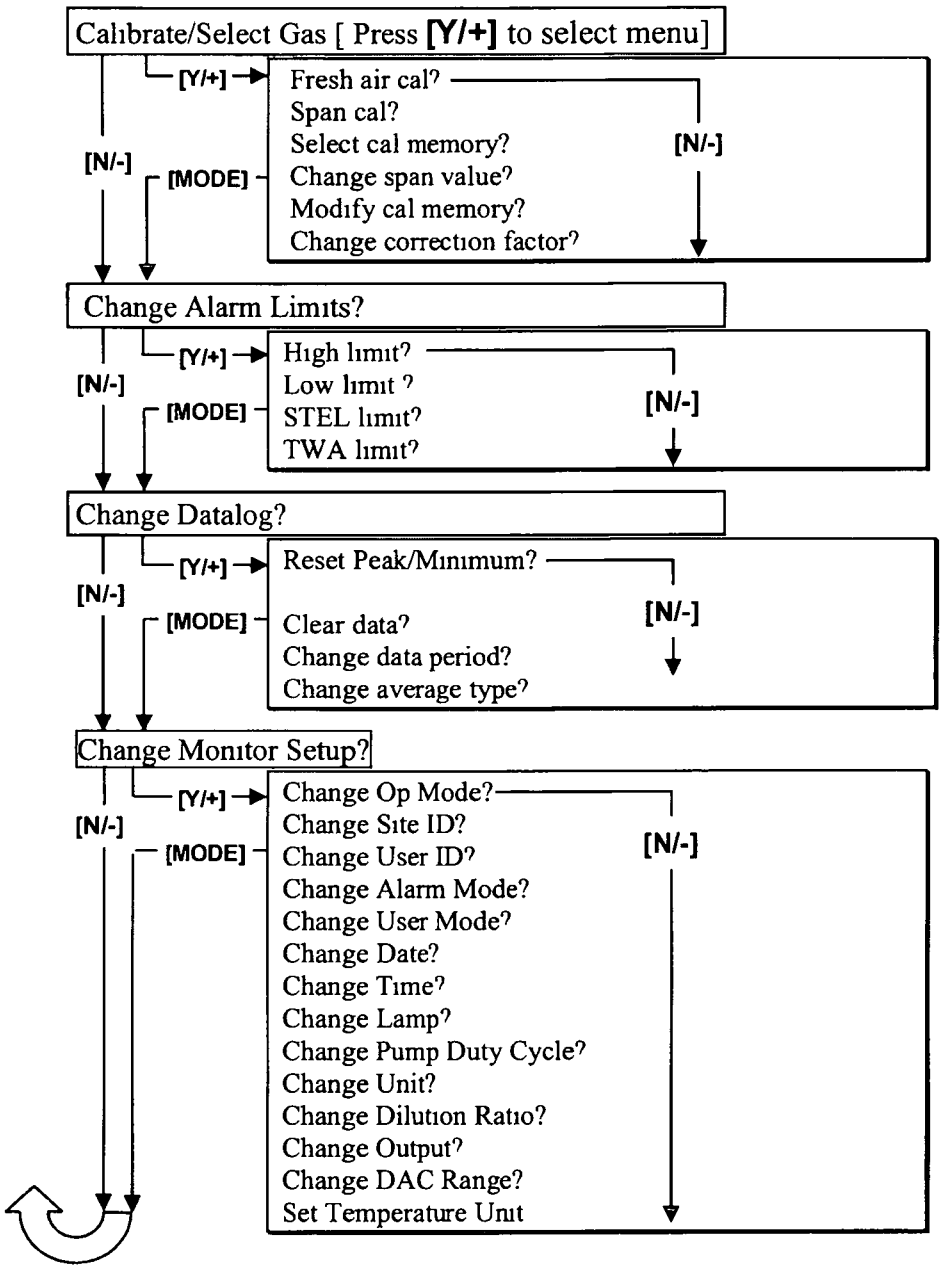

RAE Systems, Inc. Contact Information

Main Office:	3775 N. First St. San Jose, CA 95134-1708 USA
Telephone:	408-952-8200
Fax:	408-952-8480
Instrument Sales:	877-723-2878
Email:	RaeSales@raesystems.com
Website:	www.raesystems.com
Technical Service:	888-723-4800 Tech@raesystems.com

Special Note

If the monitor needs to be serviced, contact either:

1. The RAE Systems distributor from whom the monitor was purchased; they will return the monitor on your behalf.
2. The RAE Systems Technical Service Department. Before returning the monitor for service or repair, obtain a Returned Material Authorization (RMA) number for proper tracking of your equipment. This number needs to be on all documentation and posted on the outside of the box in which the monitor is returned for service or upgrade. Packages without RMA Numbers will be refused at the factory.

APPENDIX A. QUICK REFERENCE GUIDE

Press [N/-] and [MODE], simultaneously, for 3 seconds, to enter Programming Mode. Press [MODE] to return to Survey Mode.

PROGRAMMING MODE

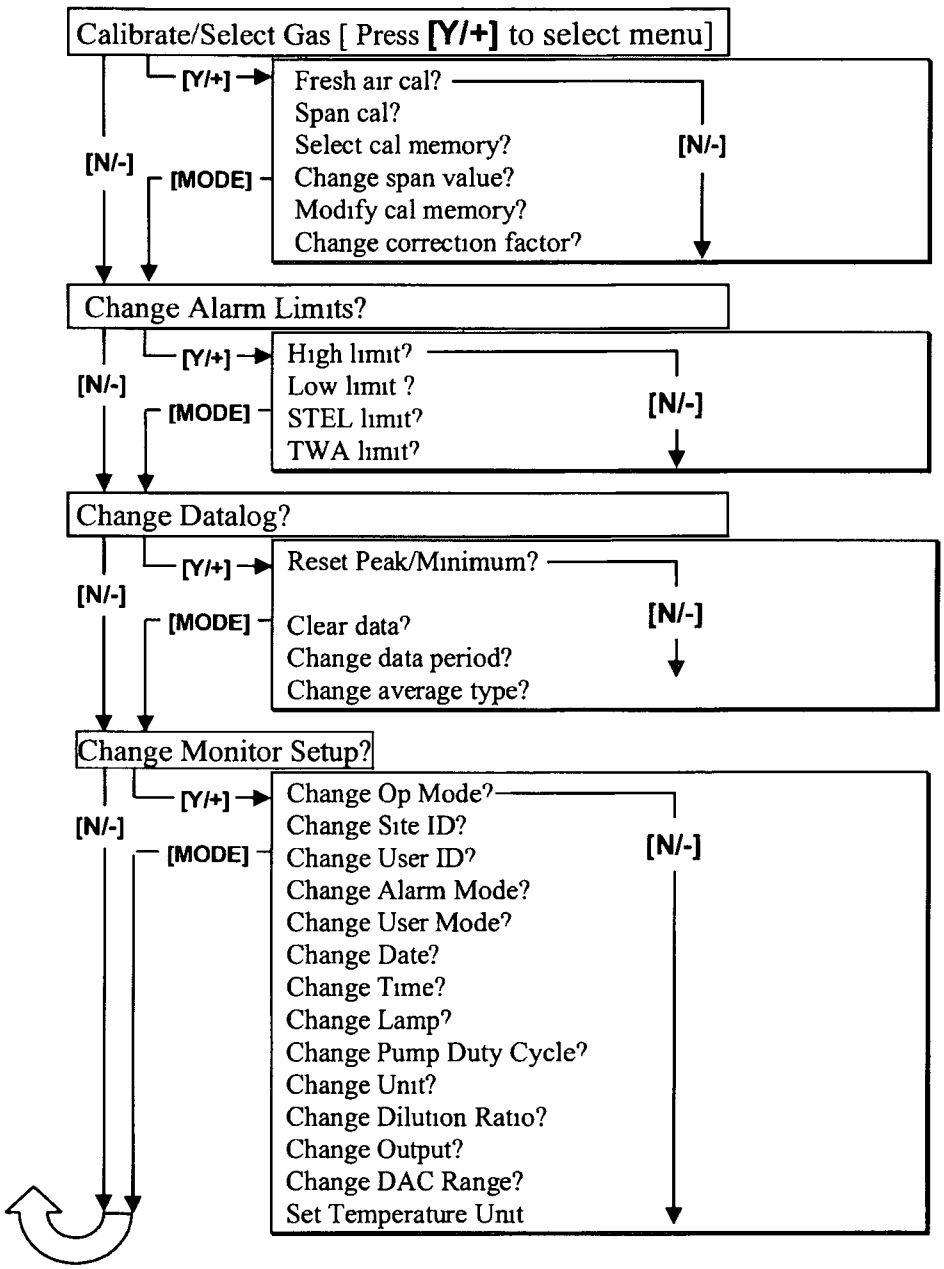

Attachment 9

KNOX-ID-0004: Analysis of Polychlorinated Dioxins/Furans by High Resolution Gas Chromatography/High Resolution Mass Spectrometry (HRGC/HRMS) Based on Methods 8290, 8290A, 1613B, 23, 0023A, and TO-9A, REV-8, June 22, 2009

Controlled Copy
Copy No. uncontrolled copy
Implementation Date: 08/20/09

SOP No.. KNOX-ID-0004
Revision No.: 8
Revision Date: 6/22/09
Page 1 of 93

TESTAMERICA KNOXVILLE

STANDARD OPERATING PROCEDURE

TITLE: Analysis of Polychlorinated Dioxins/Furans by High Resolution Gas Chromatography/High Resolution Mass Spectrometry (HRGC/HRMS) Based on Methods 8290, 8290A, 1613B, 23, 0023A, and TO-9A

(SUPERSEDES: KNOX-ID-0004, Rev. 7)

Prepared By: Melissa Skertich Davidson / Cornelia Ozahideau

Reviewed By: Melissa Skertich Davidson 6/30/09 / Cornelia Ozahideau 6/30/09
Technical Specialist

Approved By: Christopher White Rugell 06/30/09
Quality Assurance Manager

Approved By: Barry Lin Ashley 7-1-09
Environmental, Health and Safety Coordinator

Approved By: [signature] 7/1/09
Laboratory Director

Proprietary Information Statement

This documentation has been prepared by Test America Laboratories solely for their own use and the use of Test America's customers in evaluating its qualifications and capabilities in connection with a particular project. The user of this document agrees by its acceptance to return it to Test America upon request and not to reproduce, copy, lend, or otherwise disclose its contents, directly or indirectly, and not to use it for any other purpose other than that for which it was specifically provided. The user also agrees that where consultants or other outside parties are involved in the evaluation process, access to these documents shall not be given to said parties unless those parties also specifically agree to these conditions.

THIS DOCUMENT CONTAINS VALUABLE CONFIDENTIAL AND PROPRIETARY INFORMATION. DISCLOSURE, USE OR REPRODUCTION OF THESE MATERIALS WITHOUT THE WRITTEN AUTHORIZATION OF TESTAMERICA LABORATORIES IS STRICTLY PROHIBITED. THIS UNPUBLISHED WORK BY TESTAMERICA IS PROTECTED BY STATE AND FEDERAL LAW OF THE UNITED STATES. IF PUBLICATION OF THIS WORK SHOULD OCCUR THE FOLLOWING NOTICE SHALL APPLY:

COPYRIGHT 2009 TESTAMERICA LABORATORIES, INC ALL RIGHTS RESERVED.

1. Scope and Application

1 1 This procedure is used for the determination of tetra- through octa- chlorinated dibenzo-p-dioxins (PCDDs) and dibenzofurans (PCDFs) in water, soils, solids, sediments, wipes, biological samples, fly ash, XAD resin, filters, still bottoms, waste oils, and other sample matrices by high resolution gas chromatography/high resolution mass spectrometry (HRGC/HRMS). This procedure is designed to meet analytical program requirements where US EPA Method 8290, 8290A, 1613B, 23, 0023A, or TO-9A is specified

1 2 The seventeen 2,3,7,8-substituted and total Tetra-Hepta PCDDs/PCDFs listed in Table 1 can be determined by this procedure Specifications are also provided for separate determination of 2,3,7,8-tetrachlorodibenzo-p-dioxin (2,3,7,8-TCDD) and 2,3,7,8-tetrachlorodibenzofuran (2,3,7,8-TCDF) In addition, total homologs (i.e , Total TCDD, Total TCDF, etc) can be identified by this method

1 3 The detection limits and quantitation levels in this method are usually dependent on the level of interferences rather than instrumental limitations The minimum levels (MLs) in Table 2 are the levels at which the PCDDs/PCDFs can be quantitated with no interferences present

1 4 This procedure is designed for use by analysts who are experienced with residue analysis and skilled in HRGC/HRMS Each analyst must demonstrate the ability to generate acceptable results with this method

1 5 Because of the extreme toxicity of many of these compounds, the analyst must take the necessary precautions to prevent exposure to materials known or believed to contain PCDDs or PCDFs It is the responsibility of the laboratory personnel to ensure that safe handling procedures are employed Section 5 of this procedure discusses safety procedures

2. Summary of Method

2 1 This procedure uses high resolution capillary column gas chromatography/high resolution mass spectrometry (HRGC/HRMS) techniques

2 2 Samples are spiked with a solution of known amounts of the isotopically labeled internal standards listed in Table 13 and Table 15 The samples are then extracted using matrix specific extraction procedures

2 2 1 Water samples are extracted using separatory funnel techniques with methylene chloride as the extraction solvent

2 2 2 Solid samples are extracted by Soxhlet extraction with the appropriate solvent

2 2 3 Organic liquid waste samples are diluted in solvent

2 3 After extraction, the sample is concentrated and solvent exchanged with hexane The extract is then subjected to one or more cleanup steps to remove the sample of interferences The final extract is prepared by adding a known amount of the labeled recovery standards (13C12-1,2,3,4-TCDD and 13C12-1,2,3,7,8,9-HxCDD) and concentrating to the final volume

2 4 The acid-base cleanup of the sample is used before column chromatography for samples that contain large amounts of basic and acid coextractables If such interferences are not removed

before column chromatography, they can cause a shift in the predicted elution pattern Conditions which can indicate the need for this procedure are samples which are highly colored, samples which contain lipids or other oxidizable compounds or samples which contain known large amounts of polar organics

2 5 Silica gel is effective in removing chlorophenoxy herbicide residues, while alumina partitions PCBs, 2,4,5-trichlorophenol and hexachlorophene

2 6 When the above cleanup techniques do not completely remove interferences, an activated carbon cleanup is used to remove interferences

2 7 An aliquot of the extract is injected into the gas chromatograph The analytes are separated by the GC and detected by a high resolution (≥10,000) mass spectrometer Two exact m/z's are monitored for each analyte

2 8 The identification of the target 2,3,7,8 substituted isomers is based on their retention time relative to the labeled internal standards as established during routine calibration and the simultaneous detection of the two most abundant ions in the molecular ion region All other PCDD/PCDF congeners are identified by their retention times falling within retention time windows as established during routine calibration, and the simultaneous detection of the two most abundant ions in the molecular ion region Confirmation of identification is based on comparing the calculated ion ratios with the theoretical ion abundances The identification of 2,3,7,8-TCDF is confirmed on an isomer specific (DB-225) GC column

2 9 Quantitation of the 2,3,7,8-substituted PCDD/PCDF isomers, total PCDDs, and total PCDFs is based on their relative response to the internal standards A multipoint calibration is performed to establish mean response factors for the target analytes The instrument performance is routinely checked by the analysis of continuing calibration standards Method performance is demonstrated by the analysis of method blanks, initial precision and recovery samples, and ongoing precision and recovery samples

3. Definitions

3.1 Analyte A PCDD or PCDF tested for by this method The analytes are listed in Table 1

3 2 Calibration Standard A solution prepared from a secondary standard and/or stock solution and used to calibrate the response of the instrument with respect to analyte concentration

3 3 Calibration Verification Standard (VER) The mid-point calibration standard (CS3) that is used to verify calibration See Table 5 and Table 6

3 4 Cleanup Standard $^{37}Cl_4$-2,3,7,8-TCDD which is added to samples, blanks, quality control samples, and calibration solutions It is added to the samples after extraction but prior to extract cleanup, and is used to judge the efficiency of the cleanup procedures

3.5 Column Performance Solution Mixture (CPSM) A mixture of TCDD or TCDF isomers (including the 2,3,7,8-TCDD or 2,3,7,8-TCDF isomer) known to elute close to the retention time of 2,3,7,8-TCDD or 2,3,7,8-TCDF on the analytical column being used It is used to demonstrate acceptable resolution between the 2,3,7,8-TCDD or 2,3,7,8-TCDF isomer and all other TCDD or TCDF isomers on analytical column (percent valley < 25%)

3.6 Congener Any member of a particular homologous series, for example, 1,2,3,7,8-pentachlorodibenzofuran

3 7 CS1, CS2, CS3, CS4, CS5 See Calibration Standard and Table 5 and Table 6

3 8 Detection Limit (DL) The minimum concentration of the target analyte that can be detected Sample specific detection limits are calculated from the instrument noise level and internal standard response

3 9 Estimated Detection Limit (EDL) The sample specific estimated detection limit (EDL) is the concentration of a given analyte required to produce a signal with a peak height of at least 2 5 times the background signal level

3 10 Estimated Maximum Possible Concentration (EMPC): The calculated concentration of a signal in the same retention time region as a target analyte but which does not meet the other qualitative identification criteria defined in the procedure

3 11 GC Gas chromatograph or gas chromatography

3 12 Homologous Series A series of compounds in which each member differs from the next member by a constant amount The members of the series are called homologs

3.13 HRGC High resolution GC

3 14 HRMS High resolution MS

3 15 ICV· Initial Calibration Verification Standard A calibration standard from a second source, traceable to a national standard if possible The ICV is analyzed after the initial calibration to verify the concentration of the Initial Calibration Standards

3 16 Internal Standards Isotopically labeled analogs of the target analytes that are added to every sample, blank, quality control spike sample, and calibration solution. They are added to the sample before extraction and are used to calculate the concentration of the target analytes or detection limits

3 17 IPR Initial precision and recovery, four aliquots of the diluted PAR standard analyzed to establish the ability to generate acceptable precision and accuracy An IPR is performed prior to the first time this method is used and any time the method or instrumentation is modified

3 18 Isomer Chemical compounds that contain the same number of atoms of the same elements, but differ in structural arrangement and properties For example, 1,2,3,4-TCDD and 2,3,7,8-TCDD are structural isomers

3 19 Laboratory Blank See Method Blank

3 20 Laboratory Control Sample See Ongoing Precision and Recovery Standard (OPR)

3 21 Maximum Level (MaxL). The concentration or mass of analyte in the sample that corresponds to the highest calibration level in the initial calibration Also referred to as the upper method calibration limit (UMCL) It is equivalent to the concentration of the highest calibration standard, assuming that all method-specified sample weights, volumes, and cleanup procedures have been employed

3 22 Method Blank An aliquot of reagent water, sand, sodium sulfate, or other representative matrix, free of the targets of interest and interferences, that is extracted and analyzed along with the samples to monitor for laboratory contamination

3 23 Minimum Level (MinL) The level at which the entire analytical system must give a recognizable signal and acceptable calibration point for the analyte Also referred to as the lower method calibration limit (LMCL) It is equivalent to the concentration of the lowest calibration standard assuming that all method-specified sample weights, volumes, and cleanup procedures have been employed

3 24 MS Mass spectrometer or mass spectrometry

3 25 Multiple Ion Detection (MID) A MS operational mode in which only selected ions are monitored rather than scanning the instrument to obtain a complete mass spectrum.

3 26 OPR Ongoing precision and recovery standard, a laboratory blank spiked with known quantities of analytes The OPR is analyzed exactly like a sample Its purpose is to assure that the results produced by the laboratory remain within the limits specified in this method for precision and recovery

3 27 PAR Precision and recovery standard, secondary standard that is diluted and spiked to form the IPR and OPR.

3 28 PCDD Polychlorinated dibenzo-p-dioxins

3 29 PCDF. Polychlorinated dibenzofurans

3 30 PFK Perfluorokerosene, the mixture of compounds used to calibrate the exact m/z scale in the HRMS

3 31 Recovery Standard $^{13}C_{12}$-1,2,3,4-TCDD and $^{13}C_{12}$-1,2,3,7,8,9-HxCDD which are added to every sample, blank, and quality control spike sample extract prior to analysis They are used to measure the recovery of the internal standards and the cleanup standard

3 32 Relative Percent Difference (RPD) A measure of the difference between two values normalized to one of the values It is used to determine the accuracy of the concentration measurements of second source verification standards

3 33 Relative Response Factor (RRF)· The ratio of the response of the mass spectrometer to a known amount of a compound relative to that of a known amount of a reference standard as measured in the initial and continuing calibrations It is used to determine instrument performance and it is used to calculate the concentration of target analytes, internal standard recoveries, or detection limits in samples, blanks, and quality control samples

3 34 Signal to Noise Ratio The ratio of the mass spectrometer response of a GC peak to the background noise signal

3 35 Split Ratio (S): The decimal expression of the proportion of extract used from splits taken after the addition of internal standards and before the addition of recovery standards

3 36 Window Defining Mix A solution which contains the first and last eluting isomers of each homologue group and is used to verify that the switching times between the MID descriptors have been appropriately set

3 37 Additional definitions can be found in the Test America Knoxville QAM

4. Interferences

4 1 Solvents, reagents, glassware and other sample processing hardware can yield discrete artifacts or elevated baselines that can cause misinterpretation of the chromatographic data All of these materials must be demonstrated to be free from interferences under the conditions of analysis by performing laboratory method blanks Analysts must avoid using PVC gloves, powdered gloves, or gloves with levels of phthalates which cause interference

4 2 The use of high purity reagents and solvents (pesticide grade) helps minimize interference problems Where necessary, reagents are cleaned by extraction or solvent rinse

4 3 Interferences coextracted from the samples can vary considerably from matrix to matrix PCDDs and PCDFs are often associated with other interfering chlorinated substances such as polychlorinated biphenyls (PCBs), polychlorinated diphenyl ethers (PCDPEs), polychlorinated naphthalenes, and polychlorinated alkyldibenzofurans that can be found at concentrations several orders of magnitude higher than the analytes of interest Retention times of target analytes must be verified using reference standards While certain cleanup techniques are provided as part of this method, unique samples can require additional cleanup steps to achieve lower detection limits

5. Safety

5 1 Employees must abide by the policies and procedures in the Corporate Safety Manual, Radiation Safety Manual and this document

5 2 Eye protection that satisfies ANSI Z87 1 (as per the Test America Health and Safety Manual), laboratory coat and appropriate gloves must be worn while samples, standards, solvents and reagents are being handled Disposable gloves that have become contaminated must be removed and discarded, other gloves must be cleaned immediately

5 2 1 Latex and vinyl gloves provide no protection against most of the organic solvents used in this method For the operations described herein, Nitrile clean room gloves are worn For operations using solvents that splash, silver shield gloves are recommended Silver shield gloves protect against breakthrough for most of the solvents used in this procedure

5 3 Finely divided dry soils contaminated with PCDDs and PCDFs can be particularly hazardous because of the potential for inhalation and ingestion Such samples are to be processed in a confined environment, such as a hood or a glove box

5 4 The effluents of sample splitters for the gas chromatograph and roughing pumps on the mass spectrometer must be vented to the laboratory hood exhaust system or must pass through an activated charcoal filter

5 5 The gas chromatograph and mass spectrometer contain zones that have elevated temperatures The analyst needs to be aware of the locations of those zones, and must cool them to room temperature prior to working on them or use thermal protection when working on them while they are above room temperature

5 6 The mass spectrometer is under deep vacuum The mass spectrometer must be brought to atmospheric pressure prior to working on the source Alternatively, the source can be removed from the vacuum manifold through a vacuum interlock.

5 7 There are areas of high voltage in both the gas chromatograph and the mass spectrometer Depending on the type of work involved, either turn the power to the instrument off, or disconnect it from its source of power If the work involved requires measurement of voltage supplies, the instrument can be left on

5 8 When using a scalpel, cut away from yourself If you are holding something, cut away from your hand

5.9 Equipment goggles or a face shield must be used when employees are using solvents to rinse or clean glassware

5 10 Primary Materials Used The following is a list of the materials used in this method, which have a serious or significant hazard rating **NOTE: This list does not include all materials used in the method. The table contains a summary of the primary hazards listed in the MSDS for each of the materials listed in the table.** A complete list of materials used in the method can be found in the reagents and materials section Employees must review the information in the MSDS for each material before using it for the first time or when there are major changes to the MSDS

Material	Hazards	Exposure Limit (2)	Signs and symptoms of exposure
Sulfuric Acid (1)	Corrosive, Oxidizer, Dehydradator	1 mg/m^3	This material will cause burns if it comes into contact with the skin or eyes Inhalation of vapors will cause irritation of the nasal and respiratory system
Sodium Hydroxide	Corrosive, Poison	2 ppm, 5 mg/m^3	This material will cause burns if it comes into contact with the skin or eyes Inhalation of Sodium Hydroxide dust will cause irritation of the nasal and respiratory system
Hydrochloric Acid	Corrosive, Poison	5 ppm-Ceiling	Inhalation of vapors can cause coughing, choking, inflammation of the nose, throat, and upper respiratory tract, and in severe cases, pulmonary edema, circulatory failure, and death Can cause redness, pain, and severe skin burns Vapors are irritating and can cause damage to the eyes Contact can cause severe burns and permanent eye damage
Methylene chloride	Carcinogen, Irritant	25 ppm-TWA, 125 ppm-STEL	Causes irritation to respiratory tract Has a strong narcotic effect with symptoms of mental confusion, light-headedness, fatigue, nausea, vomiting and headache Causes irritation, redness and pain to the skin and eyes Prolonged contact can cause burns Liquid degreases the skin Can be absorbed through skin

Material	Hazards	Exposure Limit (2)	Signs and symptoms of exposure
Hexane	Flammable, Irritant	500 ppm-TWA	Inhalation of vapors irritates the respiratory tract Overexposure can cause lightheadedness, nausea, headache, and blurred vision Vapors can cause irritation to the skin and eyes
Methanol	Flammable, Poison, Irritant	200 ppm-TWA	A slight irritant to the mucous membranes Toxic effects exerted upon nervous system, particularly the optic nerve Symptoms of overexposure can include headache, drowsiness and dizziness Methyl alcohol is a defatting agent and can cause skin to become dry and cracked Skin absorption can occur, symptoms can parallel inhalation exposure Irritant to the eyes
Toluene	Flammable, Poison, Irritant	200 ppm-TWA 300 ppm-Ceiling	Inhalation can cause irritation of the upper respiratory tract Symptoms of overexposure can include fatigue, confusion, headache, dizziness and drowsiness Peculiar skin sensations (e g pins and needles) or numbness can be produced Causes severe eye and skin irritation with redness and pain Can be absorbed through the skin
Acetone	Flammable	1000 ppm-TWA	Inhalation of vapors irritates the respiratory tract Can cause coughing, dizziness, dullness, and headache
Cyclohexane	Flammable, Irritant	300 ppm TWA	Inhalation of vapors causes irritation to the respiratory tract Symptoms can include coughing, shortness of breath High concentrations have a narcotic effect
Tetradecane	Irritant	None established	Inhalation of vapors can cause difficulty breathing, headache, intoxication and central nervous system damage
Benzene	Flammable, Toxic, Carcinogen	PEL 1 ppm TWA , 5 ppm, 15 min STEL	Causes skin irritation Toxic if absorbed through skin Causes severe eye irritation Toxic if inhaled Vapor or mist causes irritation to mucous membranes and upper respiratory tract Exposure can cause narcotic effect Inhalation at high concentrations can have an initial stimulatory effect on the central nervous system characterized by exhilaration, nervous excitation and/or giddiness, depression, drowsiness or fatigue Victim can experience tightness in the chest, breathlessness, and loss of consciousness
Nonane	Flammable	None established	Harmful if inhaled/swallowed Vapor/mist is irritating to eyes, mucous membranes and upper respiratory tract Causes skin irritation
Potassium Hydroxide	Corrosive, Poison	2 mg/m3 ceiling	Severe irritant Effects from inhalation of dust or mist vary from mild irritation to serious damage of the upper respiratory tract, depending on the severity of exposure Symptoms can include coughing, sneezing, and damage to the nasal or respiratory tract High concentrations can cause lung damage Corrosive[1] Contact with skin can cause irritation or severe burns and scarring with greater exposures

1 – Always add acid to water to prevent violent reactions

Material	Hazards	Exposure Limit (2)	Signs and symptoms of exposure
2 – Exposure limit refers to the OSHA regulatory exposure limit			

5 10 1 Chemicals that have been classified as carcinogens, or potential carcinogens, under OSHA include benzene and methylene chloride, 2,3,7,8-TCDD and all other 2,3,7,8-substituted PCDD or PCDF isomers

Note: The 2,3,7,8-TCDD isomer has been found to be acnegenic, carcinogenic, and teratogenic in laboratory animal studies. Other PCDDs and PCDFs containing chlorine atoms in positions 2,3,7,8 are known to have toxicities comparable to that of 2,3,7,8-TCDD. The toxicity or carcinogenicity of each reagent used in this method is not precisely defined; however, each chemical compound must be treated as a potential health hazard. From this viewpoint, exposure to these chemicals must be kept to a minimum.

5 11 Exposure to chemicals must be maintained as low as reasonably achievable; therefore, unless they are known to be non-hazardous, all samples must be opened, transferred and prepared in a fume hood, or under other means of mechanical ventilation Solvent and waste containers must be kept closed unless transfers are being made

5 12 The preparation of all standards and reagents and glassware cleaning procedures that involve solvents such as acetone, toluene, methylene chloride, and hexane must be conducted in a fume hood with the sash closed as far as the operations permits

5 13 All work must be stopped in the event of a known or potential compromise to the health or safety of an associate The situation must be reported immediately to a laboratory supervisor

5 14 Training Workers must complete the employee Corporate Safety Manual safety orientation prior to working in the laboratory

5 15 Personal Hygiene Thorough washing of hands and forearms is recommended after each manipulation and before breaks (coffee, lunch, and shifts)

5 16 Confinement Work areas must be isolated and posted with signs Glassware and tools must be segregated Benchtops must be covered with plastic backed absorbent paper

5 17 Waste Good technique includes minimizing contaminated waste

5 18 Accidents Remove contaminated clothing immediately, taking precautions not to contaminate skin or other articles Wash exposed skin vigorously and repeatedly until medical attention is obtained

6. Equipment and Supplies

6 1 Sample Extraction Equipment

Note All glassware used in extraction and cleanup procedures is solvent rinsed twice before use with acetone, toluene, methylene chloride and hexane in that order Pre-extract the Soxhlet apparatus with toluene for at least 4 hours Rinse glassware with all 4 solvents once. See SOP KNOX-QA-0002, current revision, "Glassware Cleaning", for details.

6 1 1 Aqueous Sample Extraction

6 1 1 1 Multi-position separatory funnel rotator

6 1 1 2 2000 mL separatory funnels with PFTE stopcocks and PFTE stoppers

6 1 1 3 100 mm glass funnels with short stems

6 1 1 4 Class A 1 mL pipettes.

6 1 1 5 Class A 1000 mL graduated cylinders

6 1 1 6 PFTE squirt bottles, 500 mL

6 1 1 7 Syringes

6 1 1 8 Glass wool, precleaned with methylene chloride

6 1 1 9 Buchner funnels, filter flasks, rubber stopper and GF/D filters

6 1 1 10 Vacuum source

6.1 2 Soxhlet Extraction

6 1 2 1 Analytical balance, capable of weighing to 0 01 g

6 1 2 2 Stainless steel spatula

6 1 2 3 Stainless steel tweezers

6 1 2 4 Soxhlet extractor or Dean-Stark Soxhlet extractor.

6 1 2 5 Heating mantles with temperature controls

6 1 2 6 500 mL evaporative flask, round bottom

6 1 2 7 Glass condenser, compatible with the dean-stark extractor

6 1 2 8 Class A 1 mL pipettes

6 1 2 9 Glass wool, precleaned with methylene chloride

6 1 2 10 High purity glass fiber Soxhlet thimble

6 1 2 11 Boiling beads, 6 mm glass

6 1 2 12 PFTE boiling chips

6 1 3 Waste Dilution

6 1 3 1 Analytical balance, capable of weighing to 0 01 g

6 1 3 2 40 mL vial, with PFTE lined cap

6 1 3 3 5 ¾ inch borosilicate glass pipets

6 1 3 4 Rubber bulbs

6 1 3 5 1 ml Class A pipette

6 2 Sample Cleanup Equipment

6 2 1 Acid-base cleanup

6 2 1 1 Disposable Pasteur pipets and rubber bulbs

6 2 1 2 Graduated cylinder, 100 mL volume

6 2 1 3 Vials, 40 mL volume, with PFTE lined caps

6 2 2 Dual column cleanup

6 2 2 1 Disposable glass columns

6 2.2 1 1 20mm x 240mm custom glass column with support ring and tapered tip

6 2 2 1 2 16mm x 240mm custom glass column with support ring and tapered tip

6 2 2 2 Aluminum support rack for custom columns

6 2 2 3 Amber-colored glass jar with a PFTE lined screw cap, 250mL

6 2 2 4 Disposable Pasteur pipets and rubber bulbs

6 2 2 5 Bottletop solvent dispenser

6 2 2 6 40 mL vials with PFTE lined screw caps

6 2 2 7 Graduated cylinder, 100 ml

6 2 2 8 Solvent waste collection jars, 125mL

6 2 3 Activated carbon cleanup

6 2 3 1 10 mL disposable pipet for use as the column

6 2 3 1 1 All disposable carbon columns are solvent rinsed before use The solvents used are acetone, toluene, methylene chloride and hexane (in this order)

6 2 3 2 Glass wool, precleaned with methylene chloride

6 2 3 3 25 mL graduated cylinder

6 2 3 4 40 mL vials

6 3 Sample Concentration Equipment

6 3 1 Macro Concentration Equipment – Rapid-Vap

6 3 1 1 Labconco Rapid-Vap concentrator

6 3 1 2 600 mL sample concentrator tubes, Labconco or equivalent

6 3 1 3 Borosilicate 5 75 inch and 9 0 inch disposable pipettes

6 3 1 4 Rubber bulbs

6 3 1 5 Borosilicate 40 mL disposable vials with PFTE lined screwcaps

6 3 2 Macro Concentration – Snyder Column

6 3 2 1 Heating mantles with temperature controls

6 3 2 2 Three-ball macro Snyder column

6 3 2 3 Rubber bulbs

6 3 2 4 Nine inch borosilicate glass pipets

6 3 2 5 40 mL vial, with PFTE lined cap

6 3 2 6 PFTE boiling chips

6 3 3 Micro Concentration – N-Evap

6 3 3 1 Nitrogen blowdown apparatus (N-EVAP or equivalent)

6 3 3 2 Hamilton syringe –25 uL

6 3 3 3 Mini vials, 1 1 mL capacity with a tapered bottom; with PFTE faced, rubber septa and screw caps

6 4 Sample Analysis Equipment

6 4 1 Gas Chromatograph --- Must have splitless or on-column injection port for capillary column, temperature program with isothermal hold, and must meet all of the performance specification in Section 9 10

6 4 1 1 GC column for PCDDs/PCDFs and for isomer specificity for 2,3,7,8-TCDD --- 60m x 0 32mm ID x 0 25µm film thickness DB-5 or RTX-5 fused silica capillary column (J&W No 123-5062, Restek No 10227 or 10227-125 IntegraGuard) or equivalent is required

6 4 1 2 GC column for isomer specificity for 2,3,7,8-TCDF --- 30m x 0 32mm ID x 0 25µm film thickness DB-225 or RTX-225 fused silica capillary column (J&W No 123-2232 or Restek No 14024) or equivalent is required

6 4 2 Mass Spectrometer --- Electron impact ionization with the filament eV's optimized for best instrument sensitivity, stability and signal to noise ratio Must be capable of repetitively selectively monitoring 12 exact m/z's minimum at high resolution (≥10,000) during a period of approximately 1 second and must meet all of the performance specifications in Section 9 10

6 4 3 GC/MS Interface --- The mass spectrometer (MS) must be interfaced to the GC such that the end of the capillary column terminates within 1 cm of the ion source but does not intercept the electron or ion beam

6 4 4 Data System --- Capable of collecting, recording, and storing MS data

7. Reagents and Standards

7 1 Sample Pre-Treatment

7 1 1 Hydrochloric acid (HCl), concentrated 37% wt in water (ACS), Mallinkcrodt AR Select or equivalent

7 1 2 1N HCl - Carefully add 83mL of concentrated HCl to 917 mL of reagent water in a glass container

7 2 Aqueous Extraction

7 2 1 Acetone, pesticide quality or equivalent

7.2 2 Toluene, pesticide quality or equivalent

7 2 3 Methylene chloride, pesticide quality or equivalent

7 2 4 Hexane, pesticide quality or equivalent

7 2 5 Tetradecane, pesticide quality or equivalent

7 2 6 Reagent water must be produced by a Millipore DI system or equivalent, being able to produce water with 18 mega ohm (MΩ) resistance Reagent water must be free of the analytes of interest as demonstrated through the analysis of method blanks

7 2 7 Sodium sulfate, reagent grade, granular, anhydrous (J T Baker 3375, or equivalent)- Sodium Sulfate is cleaned by putting approximately 600g of Sodium Sulfate in large amber-colored glass jars and completely covering with methylene chloride, stirring the mixture with a stirring rod and letting the Sodium Sulfate soak for 5 minutes The methylene chloride is drained and this step is repeated After the methylene chloride is drained the Sodium Sulfate is transferred to a Buchner Funnel fitted onto a Vacuum Flask and is rinsed 2 times with methylene chloride while a vacuum is being applied to the apparatus The Sodium Sulfate is then placed into shallow borosilicate glass dishes where it is allowed to dry When the Sodium Sulfate is air dried it is placed in an oven at approximately 125 C – 135 C for one hour to drive off any residual moisture After drying in the oven the Sodium Sulfate is transferred into pre-cleaned glass jars with fluoropolymer lined screw caps and is placed in a desiccator until needed

7 3 Soxhlet extraction

7 3 1 Acetone, pesticide quality or equivalent

7 3 2 Toluene, pesticide quality or equivalent

7 3 3 Methylene chloride, pesticide quality or equivalent

7 3.4 Hexane, pesticide quality or equivalent

7 3 5 Benzene, pesticide quality or equivalent

7 3 6 Tetradecane, pesticide quality or equivalent

7 3 7 Sand, prepared by extracting with methylene chloride and/or baking at 450 °C for a minimum of 4 hours After cooling store in a dessicator

7.3 8 Sodium sulfate, reagent grade, granular, anhydrous (J T Baker 3375, or equivalent)- Refer to Section 7 2 7 for details of sodium sulfate preparation

7 3 9 Dry Ice, purchased from local vendor

7 3 10 Reagent water must be produced by a Millipore DI system or equivalent, being able to produce water with 18 mega ohm (MΩ) resistance Reagent water must be free of the analytes of interest as demonstrated through the analysis of method blanks.

7 4 Waste Dilution

7 4 1 Hexane, pesticide quality or equivalent

7 4 2 Benzene, pesticide quality or equivalent

7 5 Acid-Base Cleanup

7 5 1 Sulfuric acid, concentrated, ACS grade, specific gravity 1 84

7 5 2 Potassium hydroxide, 20% aqueous Prepare by cautiously adding, 200 g of potassium hydroxide pellets to 800 mL of deionized water This solution is stored at room temperature in a plastic bottle

7 5 3 Sodium chloride, NaCl, analytical reagent, 5 percent (w/v) in reagent grade water

7 5 4 Hexane, pesticide quality or equivalent

7.5 5 Benzene, pesticide quality or equivalent

7 5 6 Sodium sulfate, reagent grade, granular, anhydrous (J T Baker 3375, or equivalent)- Refer to Section 7 2 7 for details of sodium sulfate preparation

7.6 Silica Gel/Alumina Column Cleanup

7 6 1 Sodium sulfate, reagent grade, granular, anhydrous (J T Baker 3375, or equivalent)- Refer to Section 7 2 7 for details of sodium sulfate preparation

7.6 2 Methylene chloride pesticide quality or equivalent

7.6 3 Hexane, pesticide quality or equivalent

7 6 4 Acetone, pesticide quality or equivalent

7 6 5 Toluene, pesticide quality or equivalent

7 6 6 Silica gel, F679-212, Fisher Chromatographic Silica Gel, 100-200 mesh or equivalent Prepare by Soxhlet extraction with methylene chloride for at least 6 hours Transfer to a shallow, borosilicate glass dish and air dry After drying, cover with aluminum foil and activate in an oven at 130°C for a minimum of four (4) hours Store in labeled glass jars in a desiccator until use

7 6 7 3 3% Deactivated silica gel – To prepare add 6 6 mL of reagent water to 200 g of silica gel (section 7 6 6) in a 250 mL amber-colored glass jar with a PFTE lined screw cap Mix thoroughly by shaking until no lumps are visible, and the silica gel is free flowing and no longer sticks to the side of the jar

7 6 8 Acidic silica gel - To prepare, add 57 mL of concentrated sulfuric acid to 180 g silica gel (section 7 6 6) in a 250 mL amber-colored glass jar with a PFTE lined screw cap Mix thoroughly by shaking until no lumps are visible, and the silica gel is free flowing and no longer sticks to the side of the jar

7 6 9 Alumina, Neutral - Super I - Scientific Absorbents Purchase and use only activated alumina Store in an oven at 130°C when not in use

7 6 9 1 Each new lot of alumina must be tested upon receipt and before use Elute a solution containing all of the ^{13}C internal standards and native analytes through a column packed with the new lot of alumina Collect the 5% and 60% fractions together and analyze by HRMS Archive the 80 mL of hexane in a separate container The target analytes and internal standard recoveries must be greater than 85% in the final fraction If the recovery is less than 85% for any compound or internal standard, the ratios and volumes of the elution solvents must be optimized and the test is repeated until all compounds meet the recovery criteria

7 6 10 5% methylene chloride in hexane Add 15 mL methylene chloride to 285 mL hexane Store in an amber-colored glass bottle at room temperature until use

7 6 11 65% methylene chloride in hexane - add 390 mL methylene chloride to 210 mL hexane Store in an amber-colored glass bottle at room temperature until use

7 7 Activated Carbon Cleanup

7 7 1 Silica Gel Refer to section 7 6 6

7 7 2 J T Baker Carbon, Activated Powder, E345-07, or equivalent

7 7 3 Thoroughly mix 5% (by weight) Activated J T Baker carbon and 95% (by weight) Fisher Chromatographic silica gel (100-200 mesh) Activate in an oven at 130°C for 6 hours Store in a desiccator in an amber colored bottle with a PTFE lined lid until use Do not label the bottle until oven activation is completed to avoid heat damage to the label

7 7 4 Toluene, pesticide quality or equivalent

7 7 5 Methylene Chloride, pesticide quality or equivalent

7 7 6 Benzene, pesticide quality or equivalent

7 7 7 Methanol, pesticide quality or equivalent

7 7 8 Cyclohexane, pesticide quality or equivalent

7 7 9 Tetradecane, pesticide quality or equivalent

7 7 10 Hexane, pesticide quality or equivalent

7 7 11 Acetone, pesticide quality or equivalent

7 8 Standard and Calibration Solutions Certified Reference Standards purchased from Cambridge Isotope Laboratories (CIL, Andover Massachusetts), and Wellington Laboratories (Guelph, Ontario, Canada) If the chemical purity is 98% or greater, the weight can be used without correction to compute the concentration of the standard When not being used, standards are stored in the dark at room temperature in screw-capped vials with PFTE-lined caps

7 8 1 Nonane, pesticide quality or equivalent

7 9 Stock Solutions Standards are used as received after being sonicated and transferred to 1 0 mL amber glass vials with PFTE lined caps

7 9 1 Initial Calibration Standards

7 9 1 1 1613B/8290/8290A CS1-CS5 CIL Catalog No EDF-9999 (See Table 5)

7 9 1 2 23/0023A/TO-9A CS1-CS5 CIL Catalog No EDF-4052 (See Table 6)

7 9 2 Initial Calibration Verification Standard Wellington Laboratories Catalog No EPA-1613-CS3

7 9 3 Daily Calibration Verification Standards

7 9 3 1 1613B/8290/8290A CS3 CIL Catalog No EDF-9999-3 (See Table 7)

7 9 3 2 1613B/8290/8290A CS3 CIL Catalog No EDF-4141 (See Table 7)

Note This standard can be used as both the Continuing Calibration Standard and the DB/Rtx-5 GC Window Defining Mix/Column Performance Check Solution

7 9 3 3 23/0023A/TO-9A CS3 CIL Catalog No EDF-4052-3 (See Table 8)

7 9.4 PAR Native Standard Stock Solution CIL Catalog No EDF-7999-10x (see Table 11) 400-4000 ng/mL in nonane, 1 2 mL

7 9 5 Internal Standard Stock Solution

7 9 5 1 1613B/ CIL Catalog No EDF-8999, (see Table 13), 100 ng/mL ($^{13}C_{12}$-OCDD 200 ng/mL) in nonane, 500 µL

7 9 5 2 23/0023A/TO-9A CIL Catalog No EDF-4053, (see Table 15), 1000 ng/mL ($^{13}C_{12}$-OCDD 2000 ng/mL) in nonane, 1 2 mL

7 9 6 23/0023A/TO-9A Surrogate Standard Stock Solution CIL Catalog No EDF-4054, (see Table 16), 1000 ng/mL in nonane, 1 2 mL

7 9 7 Cleanup Standard Stock Solution CIL Catalog No ED-907, (see Table 14), 50 µg/mL in nonane, 1 2 mL

7 9 8 $^{13}C_{12}$-2,3,7,8-TCDD Labeled Standard Stock Solution CIL Catalog No ED-900, 50 µg/mL in nonane, 1 2 mL

7 9 9 $^{13}C_{12}$-2,3,7,8-TCDF Labeled Standard Stock Solution CIL Catalog No EF-904 50 µg/mL in nonane, 1 2 mL

7 9 10 $^{13}C_{12}$-1,2,3,4-TCDD Labeled Standard Stock Solution CIL Catalog No ED-911, 50 µg/mL in nonane, 1 2 mL

7 9 11 $^{13}C_{12}$-1,2,3,7,8,9-HxCDD Labeled Standard Stock Solution CIL Catalog No ED-996, 50 µg/mL in nonane, 1 2 mL

7 9 12 PCDD/PCDF Window Defining and Isomer Specificity Mixture CIL Catalog No EDF-4147 (see Table 18 and Table 19) This standard is used for qualitative purposes only and is not considered quantitative

7 10 Secondary Stock Solutions

7 10 1 Cleanup Standard Secondary Stock Solution Dilute 0 100 mL of the stock solution in section 7 9 7 to 1 0 mL in a volumetric flask with nonane to a final concentration of 5 0 µg/mL

7 10 2 Cleanup Standard Working Stock Solution· Dilute 0 120 mL of the stock solution in section 7 10 1 to 3 0mL in a volumetric flask with nonane to a final concentration of 200 ng/mL

7 10.3 $^{13}C_{12}$ TCDD/TCDF Internal Standard Secondary Stock Solution Dilute 0.100 mL of the stock solutions in sections 7 9 8 and 7 9 9 to 5 mL in a volumetric flask with nonane to a final concentration of 1000 ng/mL

7 10 4 Recovery Standard (RS) Secondary Stock Solution Dilute 1 0 mL of the stock solutions in sections 7 9 10 and 7 9 11 to 10 mL in a volumetric flask with nonane to a final concentration of 5 0 µg/mL

7 10 5 Native Standard Working Stock Solution – Dilute 0 300 mL of stock solution in 7 9 4 to 3 0 mL in a volumetric flask with nonane for a final concentration of 40-400 ng/mL

7 11 Standards and Spiking Solutions

7 11 1 PCDD/PCDF Window Defining and Isomer Specificity Standard Combine 25 µL of the standard solution in section 7 9 12, 5 mL of the IS spiking solution in section 7 11 3, 5 µL of the RS stock solution in section 7 10 4, and 500 µL of nonane in a 10 mL vial Concentrate the solution to 500 µL with a stream of nitrogen and transfer to 1 0 mL amber glass vials with PFTE lined cap

7 11 2 PAR Native Standard Spiking Solution Dilute 250 µL of the working stock solution in section 7 10 5 to 50 mL in a graduated cylinder with acetone to a final concentration of 0 2-2 0 ng/mL 1.0 mL of this solution is added to each IPAR, OPR, LCS or MS/MSD sample See Table 11 for a complete list of compounds and their concentrations

7 11 3 1613B/ Internal Standard Spiking Solution Dilute 1000 µL of the stock solution in section 7 9 5 1 to 100 mL in a graduated cylinder with acetone to a final concentration of 1 0 ng/mL ($^{13}C_{12}$-OCDD 2.0 ng/mL) 1 0 mL of this solution is added to each sample, method blank, and QC sample See Table 13 for a complete list of compounds and their concentrations

7 11 4 23/0023A/TO-9A Internal Standard Spiking Solution Dilute 100 µL of the stock solution in section 7 9 5 2 to 100 mL in a graduated cylinder with acetone to a final concentration of 1.0 ng/mL ($^{13}C_{12}$-OCDD 2 0 ng/mL) 1 0 mL of this solution is added to each sample, method blank, and QC sample See Table 13 for a complete list of compounds and their concentrations

7 11 5 23/0023A/TO-9A Surrogate Standard Spiking Solution: Dilute 500 µL of the stock solution in section 7 9 6 to 25 mL in a graduated cylinder with nonane to a final concentration of 20 ng/mL 100 µL of this solution is added to each sample train components before sampling See Table 16 for a complete list of compounds and their concentrations

7 11 6 Cleanup Standard Spiking Solution Dilute 100 µL of the stock solution in section 7 10 2 to 100 mL in a volumetric graduate with hexane to a final concentration of 0 20 ng/mL 1 0 mL of this solution is added to each sample, method blank, and QC sample extract prior to cleanup See Table 14 for a complete list of compounds and their concentrations

7.11 7 $^{13}C_{12}$ TCDD/TCDF Internal Standard Spiking Solution Dilute 100 µL of the stock solution in section 7 10 3 to 100 mL in a volumetric flask with acetone to a final concentration of 1 0 ng/mL 1 0 mL of this solution is added to each sample, method blank, and QC sample extract that are extracted for TCDD and/or TCDF analysis only

7 11 8 Recovery Standard Spiking Solution Add 10 mL of nonane to a 12 mL amber vial with a Class A glass pipette With a pipettor remove 200 uL of nonane from the vial and add 200 µL of the stock solution in section 7 10 4 to a final concentration of 0 1 µg/mL 20 µL of this solution is added to each sample, method blank, and QC sample extract

7 12 Stability of Solutions· Standards have an expiration of ten (10) years from date of receipt unless otherwise specified by the manufacturer Standard solutions used for quantitative purposes must be analyzed periodically, and must be assayed against reference standards before use.

7.13 Perfluorokerosene (PFK) is used in neat form to tune and calibrate the mass spectrometer Fluka (Catalog No - 77275) has been found to be superior to other sources of PFK.

8. Sample Collection, Preservation and Storage

8 1 Sampling is not performed for this method by TestAmerica Knoxville For information regarding sample shipping, refer to SOP KNOX-SC-0003, Receipt and Log In of Commercial

Samples, current revision Sample container and preservation recommendations are listed in the table below

Sample Holding Times, Containers, and Preservation

Method:	**1613B**	**8290/8290A[1]**	**23**	**0023A[1]**	**TO-9A**
Holding Times	Samples – 1 year from collection to extraction Extracts – 1 year from extraction to analysis	Samples – 30 days from collection to extraction Extracts – 45 days from extraction to analysis Tissue Extracts –45 days from collection to analysis	Samples – 30 days from collection to extraction Extracts – 45 days from extraction to analysis	Samples – 30 days from collection to extraction Extracts – 45 days from extraction to analysis	Samples – 7 days from collection to extraction Extracts – 40 days from extraction to analysis
Containers	Amber Glass	Amber Glass	See KNOX-ID-0012	See KNOX-ID-0012	See KNOX-ID-0012
Preservation:					
Aqueous Samples	0-4 °C in the dark If residual chlorine is present, add 80 mg/L sodium thiosulfate If pH > 9, adjust to pH 7-9 with sulfuric acid	4 °C ± 2 °C in the dark	N/A	N/A	N/A
Solid Samples	<-10 °C in the dark	4 °C ± 2 °C in the dark	N/A	N/A	N/A
Tissue Samples	<-10 °C in the dark	<-20 °C in the dark[2]	N/A	N/A	N/A
Air Samples	N/A	4 °C ± 2 °C in the dark	4 °C ± 2 °C in the dark	4 °C ± 2 °C in the dark	≤4 °C in the dark

Note:

1 For methoda 8290, 8290A and 0023A the holding times listed are recommendations PCDDs and PCDFs are very stable in a variety of matrices, and holding times under the conditions listed can be as high as a year for certain matrices The results of samples analyzed after the holding time expiration date must be considered to be minimum concentrations and must be identified as such in the final report Sample extracts, however, must always be analyzed within 45 days of extraction (For the State of South Carolina and the New Jersey DEP – The holdings times are as listed in the table and are not considered recommendations)

2 If the freezer used to store samples is not capable of reaching a temperature of <-20 °C when the temperature control is set to its maximum limit, a storage higher temperature is acceptable as long as it is <-10 °C

9. Quality Control

9 1 Initial Demonstration of Capability

9 1 1 Initial precision and recovery (IPR) samples are analyzed to demonstrate the ability to generate acceptable precision and accuracy

9 1 2 For aqueous samples, extract, concentrate, and analyze four 1-L aliquots of reagent water spiked with labeled internal standards and the precision and recovery standard according to the procedures in section 11 For non-aqueous samples, extract, concentrate, and analyze four aliquots of sand or sodium sulfate spiked with labeled

internal standards and the precision and recovery standard according to the procedures in section 11. It is recommended that a method blank be prepared with the IPR samples

9 2 Extracts must be stored in the dark at room temperature in amber or clear glass vials prior to analysis

9 2 1 Using the results of the set of four analyses, compute the average concentration (X) of the extracts in ng/mL and the standard deviation of the concentration(s) in ng/mL for each compound

9 2 2 For each compound, compare s and X with the corresponding limits for initial precision and recovery in Table 9 for method 1613B and Table 10 for methods 8290, 8290A 23, 0023A, and TO-9A. If s and X for all compounds meet the acceptance criteria, system performance is acceptable and analysis of blanks and samples can begin If, however, any individual s exceeds the precision limit or any individual X falls outside the range for accuracy, system performance is unacceptable for that compound Correct the problem and repeat the test

9 3 The method detection limit (MDL) study described in Section 13 must be completed with acceptable results before analysis of samples can begin

9 4 A laboratory method blank must be run along with each analytical batch of 20 (10, including field blank if provided, for TO-9A) or fewer samples The method blank is normally analyzed immediately after the calibration standards The method blank consists of reagent water for aqueous samples, and a clean solid matrix (sand or sodium sulfate) for solid samples The method blank extracts must be subject to the same clean up procedures as the associated sample extracts The method blank must meet the following acceptance criteria,

- The concentration of target analytes in the method blank must be less than the MDL If the concentration of target analytes in the method blank is greater than the MDL but less than the minimum level (ML), corrective action is required but the associated samples can be reported At a minimum, corrective must include the addition of "B" qualifiers to all associated samples with analytes detected in the method blank above the MDL

- If the concentration of target analytes in the method blank is greater than minimum level (ML) but less than 5% of the concentration in the associated samples, corrective action is required but the associated data can be reported At a minimum, corrective action must include the addition of "B" qualifiers to all associated samples with analytes detected in the method blank above the ML and documentation in the case narrative. (Note Method Blank values must be less than the ML for Ohio VAP samples)

- If the method blank sample fails to meet the acceptance criteria, the Project Manager is notified and the entire sample batch is re-extracted If there is insufficient sample volume remaining for re-extraction, the client is contacted for information about the availability of additional sample volume. If there is no additional sample available, the original sample data is flagged and reported. A nonconformance memo is initiated describing the problem and corrective action The problem and corrective action is documented in the project narrative

- If there is no target analyte greater than the minimum levels (ML) in the samples associated with an unacceptable method blank, the data can be reported with qualifiers Such action must be done in consultation with the client

9 4 1 The method blank internal standard recoveries must be within the established control limits If internal standard recoveries are not acceptable, the data must be evaluated to determine if the method blank has served the purpose of demonstrating that the analysis is free of contamination If internal standard recoveries are low and there are reportable analytes in the associated samples re-extraction of the blank and affected samples is required if the method blank does not demonstrate that the analysis is free of contamination If the method blank internal standard recoveries are outside the QC limits and the decision is made to report the sample results, an NCM must be initiated and the reason for accepting the sample results clearly documented. Consultation with the client before acceptance must take place

9 4 2 If reanalysis of the batch is not possible due to limited sample volume or other constraints, the method blank is reported, all associated samples are flagged with a "B," an NCM is initiated and appropriate comments made in the report narrative to provide further documentation

9 4 3 Refer to the QC Program document (QA-003) for further details of the corrective actions

9 5 Instrument Blank

9 5 1 Instruments must be evaluated for contamination during each 12 hour analytical run This is accomplished by analysis of a method blank if available If a method blank is not available, an instrument blank must be analyzed An instrument blank consists of solvent with the internal standards and recovery standards added It is evaluated in the same way as the method blank

9 6 Laboratory Control Sample (LCS) or Ongoing Precision and Recovery (OPR)

9 6 1 An LCS/OPR sample is analyzed along with each analytical batch of 20 (10, including field blank if provided, for TO-9A) or fewer samples LCS/OPR spike components, concentrations, and control limits are given in Table 11

9 6 2 If any analyte in the LCS is outside the control limits, corrective action must occur Corrective action includes:.

- If the LCS/OPR sample fails to meet the acceptance criteria, the Project Manager is notified and the entire sample batch is re-extracted If there is insufficient sample volume remaining for re-extraction, the client is contacted for information about the availability of additional sample volume If there is no additional sample available, the original sample data is flagged and reported A nonconformance memo is initiated describing the problem and corrective action. The problem and corrective action is documented in the project narrative

- If the batch is not re-extracted and reanalyzed, an NCM must be initiated and the reasons for accepting the batch must be clearly presented in the project records and the

report (An example of an acceptable reason for not reanalyzing might be that the matrix spike and matrix spike duplicate recoveries are within control limits, the method blank and sample internal standard recoveries are within limits, and the data clearly demonstrates that the problem was confined to the LCS/OPR)

- For method TO-9A calculate the precision (%D) relative to the previous TO-9A LCS The precision must be within ± 30%

9 6.3 Ongoing monitoring of the LCS/OPR provides evidence that the laboratory is performing the method within accepted QC guidelines for accuracy and precision

9.7 Internal Standards

Internal standards are spiked into all samples, blanks, and laboratory control samples to assess method performance on the sample matrix The recovery of each labeled internal standard must be within the limits in Table 13 for methods 1613B, 8290 and 8290A or in Table 15 for methods 23, 0023A, and TO-9A

9 7 1 If the recovery is outside these limits the following corrective action must be taken

- Check all calculations for error
- Ensure that instrument performance is acceptable
- Recalculate the data and/or reanalyze if either of the above checks reveal a problem.
- If the recovery of any internal standard is less than the lower control limit, calculate the S/N ratio of the internal standard If the S/N is > 10 and the estimated detection limits (EDLs) are less than the minimum levels (ML's), report the data as is with qualifiers in the report and a discussion in the case narrative. If the S/N is < 10 or the estimated detection limits (EDLs) are greater than the minimum levels (ML's), re-extract and re-analyze the sample If the poor internal standard recovery is judged to be a result of sample matrix, a reduced portion of the sample can be re-extracted or additional clean-ups can be employed. The decision to reanalyze or flag the data is made in consultation with the client

9.8 Matrix Spike/Matrix Spike Duplicate (MS/MSD) – Method 8290 only

When method 8290 is performed a matrix spike/matrix spike duplicate (MS/MSD) is prepared and analyzed with every 20 samples of a given matrix Note that a MS/MSD is not required for Method 8290A The MS/MSD is spiked with the same subset of analytes as the LCS (See Table 12) Compare the percent recovery and relative percent difference (RPD) to that in the laboratory specific historically generated limits

- If any individual recovery or RPD falls outside the acceptable range, corrective action must occur The initial corrective action is to check the recovery of that analyte in the Laboratory Control Sample (LCS) Generally, if the recovery of the analyte in the LCS is within limits, then the laboratory operation is in control and analysis can proceed The reasons for accepting the batch must be documented in the report narrative

- If the recovery for any component is outside QC limits for both the Matrix spike / spike duplicate and the LCS, the analysis is out of control and corrective action must be taken Corrective action normally includes repreparation and reanalysis of the batch
- If a MS/MSD is not possible due to limited sample, then a LCSD must be analyzed The LCSD is evaluated using the same acceptance criteria as the LCS The RPD of the LCS and LCSD are compared to the acceptance limits in Table 12
- The matrix spike / duplicate must be analyzed at the same dilution as the unspiked sample, even if the matrix spike compounds are diluted out

9 9 Surrogate Standards – Methods 23, 0023A, TO-9A

Field surrogate standards are added to the collection media prior to sample collection when performing methods 23, 0023A, or TO-9A The surrogate recoveries are calculated relative to the internal standards and are a measure of sampling efficiency The recovery of the surrogate standards must be within the limits specified in Table 16 Poor recoveries of the surrogate standards can indicate breakthrough in the sampling train

9 9 1 If the recovery is outside these limits the following corrective action must be taken

- Check all calculations for error
- Ensure that instrument performance is acceptable
- Recalculate the data and/or reanalyze if either of the above checks reveal a problem
- Flag the results that are outside control limits and notify the Project Manager The client must be notified and consulted for additional corrective action

9 10 For Ohio VAP, the laboratory must take corrective action for any QC outliers which includes re-extraction if there is sufficient holding time and sample volume Also, the client may not make decisions regarding whether or not the laboratory takes corrective action

10. Calibration and Standardization

10.1.1 Two types of calibration procedures are required One type, initial calibration, is required before any samples are analyzed and is required intermittently throughout sample analyses as dictated by the results of continuing calibration procedures described below The other type, continuing calibration, consists of analyzing the column performance check solution and a calibration solution (CS3) No samples are to be analyzed until acceptable calibration as described in sections 10.2 and 10 2 8 1 is demonstrated and documented. A 2uL injection volume is specified for all extracts, blanks, calibration solutions and performance check samples A 1uL injection volume can be used; however, the laboratory must keep the injection volume the same throughout calibration and analysis

10 2 Initial Calibration

10 2 1 Prepare multi-level calibration standards containing the compounds and concentrations as specified in Table 5 for methods 1613B, and 8290/8290A or in Table 6 for methods 23, 0023A, or TO-9A Store calibration standards at room temperature in the dark Calibration standard solutions have an expiration date of ten (10) years from date of receipt unless otherwise specified by the manufacturer/supplier

10.2 2 Establish operating parameters for the GC/MS system (suggested operating conditions are displayed in Figure 1 and Figure 2) For method 1613B adjust the GC conditions to meet the relative retention times for the PCDDs/PCDFs listed in Table 3 The cycle time for MID descriptors must be ≤ 1 sec

10 2 3 By using a PFK molecular leak, tune the instrument to meet the minimum resolving power of 10,000 (10 percent valley) at m/z 304 9824 (PFK) or any other reference signal close to the m/z 303 9016 (from TCDF) By using peak matching conditions and the aforementioned PFK reference peak, verify that the exact mass of m/z 380 9760 (PFK) is within 5 ppm of the required value Document that the resolving power at reduced accelerating voltage of m/z 380 9760 is greater than 10,000 (10 percent valley)

10 2 4 Analyze 2µL of the Window Defining Mixture and set the switchpoints for the MID descriptors The switchpoints must be set to encompass the retention time window of each congener group

10 2 5 If the initial calibration is being performed on the DB-5 or RTX-5 column, analyze 2µL of the Column Performance solution or Mixture Solution The chromatographic peak separation between 2,3,7,8-TCDD and the closest eluting non-2,3,7,8-TCDD isomer must be resolved with a % Valley of ≤ 25, where

$$\% \text{ Valley} = \frac{\text{baseline to valley height of closest eluting isomer}}{\text{peak height of 2,3,7,8 - TCDD}} \times 100$$

If the initial calibration is being performed on the DB-225 or RTX-225 column, analyze 2µL of the TCDF Column Performance solution The chromatographic peak separation between 2,3,7,8-TCDF and the closest eluting non-2,3,7,8-TCDF isomer must be resolved with a % Valley of ≤ 25, where

$$\% \text{ Valley} = \frac{\text{baseline to valley height of closest eluting isomer}}{\text{peak height of 2,3,7,8 - TCDF}} \times 100$$

10 2 6 Analyze 2µL of each of the five calibration standards and calculate the RRF of each analyte vs the appropriate internal standard listed in Table 3 for methods 1613B, 8290/8290A or in Table 4 for methods 23, 0023A, and TO-9A using the following equation,

$$RRF = \frac{As \times Cis}{Ais \times Cs}$$

where

As = sum of the areas of the quantitation ions of the compound of interest
Ais = sum of the areas of the quantitation ions of the appropriate internal standard
Cis = concentration of the appropriate internal standard
Cs = concentration of the compound of interest

10 2 6 1 Calculate the mean relative response factor (mean RRF) and the percent relative standard deviation (RSD) of the relative response factors for each compound of interest in the five calibration standard solutions using the following equations,

$$\overline{RRF}_{n=5} = \frac{1}{n} \times \sum_{i=1}^{n} RF_i$$

$$RSD_{n=5} = \sqrt{\frac{\sum_{i=1}^{n}\left(RF_i - \overline{RF}\right)^2}{n-1}} \times \frac{100}{\overline{RRF}}$$

10 2 7 Criteria for Acceptable Calibration - The criteria listed below for acceptable calibration must be met for each initial calibration standard before sample analyses are performed If acceptable initial calibration is not achieved, identify the root cause, perform corrective action, and repeat the initial calibration If the root cause can be traced to problems with an individual analysis within the calibration series, follow the procedure in Test America Policy CA-T-P-002 Selection of Calibration Points, current revision (see reference section 16 8)

10 2 7 1 The percent relative standard deviation (RSD) for the mean relative response factors must be within the acceptance criteria listed in Table 5 for methods 1613B, 8290/8290A,or in Table 6 for methods 23, 0023A, and TO-9A

10 2 7 2 The peaks representing the PCDDs/PCDFs and labeled compounds in the calibration standards must have signal-to-noise ratios (S/N) ≥ 10

10 2 7 3 The ion abundance ratios must be within the specified control limits in Table 22

10 2 7 4 For method 1613B the absolute retention time of $^{13}C_{12}$-1234-TCDD must exceed 25 0 minutes on the DB/Rtx-5 column and 15 0 minutes on the DB/Rtx-225 column

10 2 7 5 Corrective action can include replacing the injector port liner, replacing the injector port septum, removal of a small portion of the front of the analytical column, replacing the autosample syringes and rinse solvent, adjusting the instrument tuning, cleaning the ion volume or ion source,installing a new analytical column, and replacing the calibration standard solutions

10 2 8 Analyze 2µL of the Initial Calibration Verification (ICV) Standard in section 7 9 2 after the completion of the initial calibration prior to sample analysis Calculate the concentration of the ICV using the RRF's from the CS3 standard analyzed in section 10.2 6 and the formula in section 12.3 4 Calculate the percent difference (%D)

between the expected and the calculated ICV concentration using the following formula

$$\%D = \frac{(C_{Exp} - C_{Calc})}{C_{Exp}} \times 100$$

Where
C_{Exp} = The expected concentration of the Standard
C_{Calc} = The calculated concentration of the Standard

10 2 8 1 The general criteria for percent difference acceptance limits is less than or equal to ±25% for all native compounds The warning limits for percent difference is ±25 - 35%

10 2 8 2 All data associated with compounds with percent differences in the warning limits must be reviewed before acceptance

10 2 8 3 All data associated with compounds with percent differences outside the warning limits must be documented as an NCM Corrective action must be taken and can include the following

- Reanalyze the ICV Standard
- Replace and reanalyze the ICV Standard
- Evaluate the instrument performance
- Evaluate the Initial Calibration Standards

10 3 Continuing Calibration

10.3 1 Continuing calibration is performed at the beginning of a 12 hour period after successful mass resolution and GC resolution performance checks A calibration check is also required at the end of a 12 hour period when performing method 8290/8290A or 0023A

10 3 2 Document the mass resolution performance as specified in section 10 2 3 The mass resolution checks must be performed at the beginning and at the end of each 12-hour shift

10 3.3 Analyze 2µL of the Window Defining Mixture and or Column Performance Solution Mixture under the same instrument conditions used to perform the initial calibration Determine and document acceptable column performance as described in section 10 2 4 and 10 2 5

10 3 4 Analyze 2µL of the Daily Calibration Standard Solution (CS3) Calculate the concentrations and percent difference of the standard using the formulas in sections 12 3 4 and 10 2 7 5

Note The combined Continuing Calibration Standard/Window Defining Mix/Column Performance Solution specified in section 7 9 3.2 can be used in section 10 3 2, 10 3 4, and 10.3 6

10 3 5 Criteria for Acceptable Calibration - The criteria listed below for acceptable calibration must be met at the beginning of each 12 hour period that samples are analyzed If acceptable beginning continuing calibration criteria is not met, identify the root cause, perform corrective action and repeat the continuing calibration If the second consecutive beginning continuing calibration does not meet acceptance criteria, additional corrective action must be performed Acceptable performance must be demonstrated after two consecutive failing beginning continuing calibrations by the analysis of two consecutive acceptable beginning continuing calibrations or by analysis of a new initial calibration

10 3 5 1 The measured concentration or percent difference for each compound must be within the acceptance criteria limits in Table 7 for methods 1613B, 8290/8290A or in Table 8 for methods 23, 0023A, and TO-9A

10 3 5 2 For method 1613B the relative retention times of PCDDs/PCDFs and labeled compounds in the standard must be within the limits in Table 3

10 3 5 3 The peaks representing the PCDDs/PCDFs and labeled compounds in the calibration standard must have signal-to-noise ratios (S/N) ≥ 10

10 3 5 4 The ion abundance ratios must be within the specified control limits in Table 22

10 3 5 5 Corrective action can include all of the items specified in section 10 2 7 5

10 3 5 6 When performing method 8290/8290A,or 0023A, if the continuing calibration fails at the beginning of a 12-hour shift, the instructions in section 10 3 5 must be followed If the continuing calibration check performed at the end of a 12 hour period fails by no more than ±25 percent RPD for unlabeled native analytes and ±35 percent RPD for labeled standards, the closing standard must not be used as a beginning calibration standard for the next 12-hour shift and the requirements in section 10 3 5 must be met before analysis can continue Use the mean RRF from the two daily continuing calibration runs to compute the analyte concentrations, instead of the RRFs obtained from the initial calibration If the continuing calibration check performed at the end of a 12 hour period fails by more than ±25 percent RPD for unlabeled native analytes and ±35 percent RPD for labeled standards initiate corrective action and reanalyze all sample extracts analyzed during the 12 hour period encompassing the failed end of shift calibration check

It is realized that it might not always be possible to achieve all RF criteria For example, the RF criteria for 13C12-HpCDD and 13C12-OCDD were not met, however the RF values for the corresponding unlabeled compounds were within the criteria established in this procedure The data quality for the unlabeled HpCDD and OCDD values were not compromised as a result of the calibration event In these situations, the analyst must consult with the group manager and the project manager to assess the impact on the data quality objectives on the affected samples Corrective action must be taken

and any decision to report sample data in this situation must be made in conjunction with the client An NCM must be initiated if the data is to be reported

10 3 6 Daily calibration must be performed every 12 hours of instrument operation The 12 hour shift begins with the documentation of the mass resolution followed by the injection of the Window Defining Mixture or Column Performance Solution Mixture and the Daily Calibration Standard

10 3 6 1 For methods 1613B, 23, TO-9A- The mass resolution documentation must also be performed at the end of the 12 hour shift If the lab is operating consecutive 12 hour shifts, the mass resolution check from the end of the previous period can be used for the beginning of the next period

10 3 6 2 For method 8290/8290A or 0023A - The Continuing Calibration Standard check and mass resolution documentation must also be performed at the end of the 12 hour shift If the lab is operating consecutive 12-hour shifts, the Window Defining Mixture and/or Column Performance Solution Mixture must be analyzed at the beginning of each 12-hour period The mass resolution and continuing calibration checks from the previous period can be used for the beginning of the next period

11. Procedure

11 1 One time procedural variations are allowed only if deemed necessary in the professional judgment of supervision to accommodate variations in sample matrix, radioactivity, chemistry, sample size, or other parameters Any variations in the procedure, except those specified by project specific instructions, must be completely documented using a Nonconformance Memo and approved by a Technical Specialist, Project Manager, and QA Manager If contractually required, the client must be notified

Any unauthorized deviations from this procedure must also be documented as a nonconformance, with a cause and corrective action described

11 2 Screening process for samples with high concentration of Dioxins/Furans

11 2 1 Samples received are carefully reviewed before starting the extraction process Any samples that are received from known Dioxin/Furan sites and samples that contain keywords such as PCP (pentachlorophenol) site, wood treaters, PCB sites, and fire/burn sites can be subjected to the screening process

11 2 2 Screening is done as a precaution to minimize the chance of having high level samples exposing the preparation and analytical areas to excessive amounts of Dioxin/Furan's, thereby potentially contaminating areas and other samples contained in those areas See Figure Attachment I for LRMS Dioxin Screen Strategy

11 2 3 Mix Sample well, weigh out 2 5 g and place in a 40 mL vial

11 2 4 Add 10 mL of toluene and shake on a shaker table for 3 hours

11 2 5 After contents have settled, remove the toluene from the vial and place in a fresh, clean vial containing 100 uL of tetradecane as a keeper Rinse vial 3 times with 1 mL of toluene to insure complete transfer of extract

11 2 6 Solvent exchange the extract by placing it on the nitrogen concentration device Concentrate the extract to near dryness Add 4 mL of hexane and concentrate to near dryness again Repeat again and then bring the extract to volume with 2 mL of hexane

11 2 7 Run the extract thru a silica gel/alumina column cleanup as detailed in section 11 9 3 After the silica gel/alumina column cleanup is completed, put the extract back on nitrogen concentration device and concentrate to approximately 0 5 mL

11 2 8 Transfer the concentrated extract to a 2 mL, clear, crimp top vial marked at 1 0 mL Rinse the 40 mL vial several times with small amounts of hexane to complete the transfer Adjust volume of the extract to 1 0 mL Take extract to GC/MS group for analysis.

11 3 Sample Pretreatment

11 3 1 Tissue Samples

11 3 1 1 If the sample matrix is tissue and has not been homogenized prior to sample receipt, the entire sample is blended to provide a homogeneous sample At least 20 g of tissue is homogenized if possible to allow for reanalysis if necessary

11 3 1 2 Cut tissue into pieces of a uniform size (approximately 1 inch square) Homogenize the tissue sample in a laboratory blender

11 3 1 3 Weigh out 10 grams of the homogenized tissue sample, record the sample weight on the sample prep sheet or in a logbook Add the sample along with 20 g of sodium sulfate to a laboratory blender Blend the tissue/sodium sulfate mixture, while adding small chips of dry ice as necessary, to achieve a powder like consistency Additional amounts of sodium sulfate can be added to achieve a powder like consistency

If a Lipids determination has been requested see Appendix I

11 3 2 Fly Ash Samples

11 3 2 1 If the sample matrix is fly ash and is to be analyzed by method 8290, pretreat the sample with HCl as follows

11 3 2 2 Weigh 10±0 05 g of the fly ash sample and transfer to a 240 mL glass jar Record the sample weight on the sample prep sheet If a sample is designated for MS/MSD analysis, prepare two additional portions of the sample and label them as the MS and MSD samples

11 3 2 3 Add 150 mL of 1N HCl to the sample Seal the jar with a PFTE lined screw cap and shake for 3 hours at room temperature

11 3 2 4 Rinse a glass fiber filter with reagent water, carefully fit the glass fiber filter into a Buchner funnel and filter the sample through the glass fiber filter, placed in the Buchner funnel attached to a 1 L vacuum flask Rinse the sample bottle twice with small amounts of reagent water, making sure that all particulate matter is transferred onto the glass fiber filter Wash the fly ash cake with approximately 500 mL reagent water

11 3 2 5 Add 1 0 mL of the internal standard spiking solution (see section 7 11 3) to the sample Record the standard solution ID and volume spiked on the sample prep sheet Initial and date the entry Extract the sample and glass fiber filter by Dean-Stark Soxhlet extraction in section 11 5

11 4 Aqueous Sample Extraction

11 4 1 Remove samples from the refrigerator and allow them to come to room temperature before measuring the volume or performing the extraction Inspect the samples carefully for biphasic sample characteristics If this condition exists, document the observation, contact project manager for instructions before proceeding with the extraction

11 4 2 For aqueous samples that contain visible solids, a percent solid determination must be performed using the following procedure

Add 10 mL of the well shaken sample to a pre-weighed aluminum weighing dish Weigh the dish to three significant figures Dry the dish overnight in an oven at 105 °C Reweigh the dish and calculate the percent solids using the following equation

$$\%solids = \frac{\text{weight of dish plus sample after drying} - \text{weight of dish}}{\text{weight of dish plus sample before drying} - \text{weight of dish}} \times 100$$

11 4 3 8290 aqueous extraction and analysis For samples with ≤ 1% solids follow normal extraction procedure For sample with ≥ 1% , consult project manager for further instruction before proceeding with the extraction

Note. Samples can be filtered, and extracted as a solid or aqueous separately or both fractions of solid and aqueous can also be combined after extraction at client's request

11 4 4 1613 aqueous extraction and analysis For samples with ≤ 1% solids, samples must be filtered and extracted as solid and aqueous fractions The extracts from each fraction are then combined into one extract See Section 11 4 9 1 for filtration For samples with > 1%, consult project manager for further instructions before proceeding with extraction

11 4 5 Refer to Knoxville SOP, KNOX-QA-0002, current revision, for information on glassware cleaning procedures for extraction glassware Visually inspect all glassware prior to use for scratches or cracks Retire and replace any glassware found to be damaged

11 4 6 Place separatory funnels, one for each sample, the method blank, and the OPR, in the positions in the rotary extractor

11 4 7 Place a 600 mL concentration tube directly beneath each separatory funnel in the tube holder

11 4 8 Plug a glass funnel with glass wool and pour in some sodium sulfate (about 1 to 2 inches from the top) Rinse the sodium sulfate with methylene chloride After the funnel stops dripping, place the funnel on top of the concentrator tube

11 4 9 If solids are not observed in the sample, mark the level of the sample on the sample bottle in order to measure the volume later and carefully add the sample to the separatory funnel, taking care not to spill any sample Using a Class A 1000 mL graduated cylinder measure out 1000 mL of reagent water and add to the separatory funnels marked for the method blank , LCS/OPR, and LCSD (if required)

11 4 9 1 Sample Filtration

11 4 9 1 1 Assemble a Buchner funnel with a rubber stopper on top of a clean vacuum filter flask Insert a 15 cm diameter, 2 7 um particle retention glass fiber filter into the funnel Wet the filter paper with a few mLs of reagent water and apply vacuum to the filter flask

11 4 9 1 2 Apply vacuum to the flask, mark the level of the sample on the sample bottle in order to measure the volume later and carefully add the sample to the Buchner funnel, swirling the sample remaining in the bottle to suspend any particles

11 4 9 1 3 Rinse the sample bottle twice with approximately 10 mL portions of reagent water to transfer any remaining particles onto the filter Rinse any particles off the sides of the Buchner funnel with small quantities of reagent water

11 4 9 1 4 If the percent solids are ≤ 1%, extract the filtrate in a separatory funnel by proceeding to section 11 4.10 Extract the solids on the filter and the filter itself following the procedure in section 11 5 **Do not add internal standards to this portion of the sample, only add internal standards to the aqueous portion of the sample!** The resulting extract is combined with the extract of the aqueous portion during the macro concentration step in section 11 8

11 4.10 Using a Class A 1 mL volumetric pipet, add 1 mL of the ^{13}C labeled internal standard spiking solution, as specified in section 7 11 3, to each sample, the method blank, LCS/OPR, LCSD (as required), and MS/MSD (as required) samples Record the amount of spike used and the spike solution number in the standards logbook and on the benchsheet

11 4 11 Using a Class A 1 mL volumetric pipet, add 1 mL of the PAR native spiking solution, as specified in section 7 11 2, to the designated LCS/OPR, LCSD (as required), and MS/MSD (as required) samples Record the amount of spike used and the spike solution number in the standards logbook and on the benchsheet

Note If the volume of standard in the stock container is less than 10 mL after use, discard the remaining portion and prepare a new batch as specified in section 7 11 2

11 4 12 Add 60 mL of methylene chloride to the sample bottle and shake Then carefully pour the methylene chloride into the separatory funnel Add 60 mL of methylene chloride to the method blank, LCS/OPR , and LCSD (if required) as well

11 4 13 Secure the separatory funnel with the rotator retaining straps and rotate for 2 minutes

CAUTION Care must be used while performing this operation Vent the separatory funnel frequently Goggles can be worn when performing this procedure.

11 4 14 Allow the water and the methylene chloride to separate for 10 minutes If it is not separated after 10 minutes, try to break up the emulsion by gently swirling the sample or tilting the separatory funnel on its side

11 4 15 Drain the methylene chloride from the separatory funnel into the glass funnel that is filled with sodium sulfate, allowing the extract to drip into the concentrator tube. Be careful not to allow water to escape the separatory funnel or the sodium sulfate will harden and block the flow of the extract When an emulsion is present, do not drain the emulsion until the third methylene chloride shake has been completed If at least 10 minutes has elapsed and other ways of breaking up or reducing the size of the emulsion have failed the following steps can be tried to reduce the impact of the emulsion on the sodium sulfate

11 4 15 1 Place a large piece of pre-cleaned glass wool in the funnel containing the sodium sulfate

11 4 15 2 Spread the glass wool out, covering the entire surface of the sodium sulfate to about a depth of about 5 to 10 mm If the emulsion is hard to break up and persistent, a small, additional layer of sodium sulfate is added on top of the glass wool

11 4 15 3 Drain the solvent and emulsion layer into the funnel being careful to drain no more than 60 mL of volume if a clear phase layer cannot be determined

11 4 15 4 If this procedure is used the funnel is rinsed with an extra 30 mL of methylene chloride to ensure all analytes are rinsed into the concentrator tube after the third portion of methylene chloride has drained through the sodium sulfate in section 11 4 17

11 4 16 Repeat steps 11.4 12 through 11 4 15 two more times

11 4 17 After the third methylene chloride portion has filtered through the sodium sulfate, rinse the funnel with approximately 40 mL of methylene chloride

11 4 18 Remove the separatory funnel from the hood and pour the extracted water into the extracted water waste's carboy

11 4 19 Fill the empty sample bottle to the marked level with tap water Pour the tap water into a Class A 1000 mL graduated cylinder Record the volume of sample used on the benchsheet

11.4 20 Proceed to Macro Extract Concentration by Rapid-Vap in section 11 8

11 5 Soxhlet Extraction

11.5 1 Prepare and label the required number of Soxhlet systems , A Dean-Stark extractor is used to remove the water from all sample matrices except tissue The Dean-Stark apparatus is installed between the Soxhlet body and the condenser when the components are assembled

11 5 2 The Soxhlet is prepared by cleaning and rinsing per section 6 1.

11 5 3 For 1613 solids and for 8290 or 8290A solids that have been designated as sediments Calculate the amount of solids to be weighed out to achieve a 10 g dry weight of sample See Attachment II for example of moisture spreadsheet

11 5 3 1 Batch samples in Quantims and access an EXCEL template to determine the amount of solids to weigh out to achieve a 10 g "dry weight" sample In EXCEL, select General Template file menu on the right, then select Knx OrgPrep, and then pick Sediment Extraction Amounts, Current Revision, and follow the instructions as they appear After the information has been acquired, click on the 10g tab and the amounts needed to use appears

11.5 4 Transfer 10 ± 0 05 g of the solid sample (wet weight) into a glass fiber extraction thimble or glass fiber filter paper and put the thimble or filter inside the Soxhlet Enter the adjusted amount of sample size if adjusting the amount extracted to achieve a 10 g dry weight If tissue samples are being extracted, add the entire sample and sodium sulfate mixture prepared in section 11 3 1 3 Record the sample weight on the sample prep sheet Initial and date the entry Enter the balance ID number on the sample prep sheet If a sample is designated for MS/MSD analysis, prepare two additional portions of the sample and label them as the MS and MSD samples

Note. The MS and MSD samples must be prepared at the same weight as the OS to avoid calculation errors in the RPD values

11 5 4 1 For the method blank, LCS/OPR and LCSD (if required) add 10 ± 0 05 g of sodium sulfate to a glass fiber extraction thimble

11 5 4 2 If the matrix is tissue samples, sodium sulfate and dry ice are used for method blank, LCS/OPR, and LCSD (if required) Transfer 20 ± 0 5 g of the sodium sulfate and several small chips of dry ice into an extraction thimble

11 5 4 3 Record the blank matrix type and lot number on the bench sheet

11 5 5 Pour approximately 350 mL toluene into a 500 mL round bottom flask For tissue samples, use methylene chloride as the extraction solvent Place the flask in the heating mantle Add approximately 10 boiling beads and several PFTE boiling chips

11 5 6 Place the extraction thimble in the glass Soxhlet extractor

11 5 7 Assemble the Soxhlet system and secure to the lab supports

11 5 7 1 Place the method blank and QC samples in random positions within the available prep positions in the hood (i e , do not use the same positions each time for the method blank and QC samples)

11 5 8 Spike each sample with 1 0 ml of the internal standard spiking solution (see section 7.11 3) and add a small amount of glass wool if needed to secure the sample material to the top of the extraction thimble Record the standard solution ID and volume spiked on the sample prep sheet Initial and date the entry

11 5 8 1 Spike the LCS/OPR, LCSD (if required), and MS/MSD samples with 1 0 ml of the PAR native spiking solutions (see section 7.11 2) prior to adding the glass wool Record the standard solution ID and volume spiked on the sample prep sheet Initial and date the entry

Note If the volume of standard in the stock container is less than 10 mL after use, discard the remaining portion and prepare a new batch as specified in section 7 11 2

11 5 9 Adjust the temperature of the heating mantle to bring the solvent in the round bottom flask to a rolling boil There must be a steady drip from the condensers so that the solvent completely cycles at least 5 times an hour Record the date and time that the Soxhlet extraction was started on the benchsheet and initial and date

11 5 10 Soxhlet extract the sample in the above manner for a minimum of 16 hours At the end of the extraction period, turn off the heating mantles Record the date and time that the Soxhlet extraction was completed on the benchsheet and initial and date

11 5 11 Remove the condensers If a Dean Stark condenser is used, drain the water from the Dean Stark (the bottom layer of liquid) Then drain the remaining liquid into the soxhlet Empty the Soxhlet extractor chamber into the round bottom flask and remove the Soxhlet extractor from the 500 mL round bottom flask

11 5 12 Add several (2-3) fresh boiling chips to the flask Insert a three-ball macro Snyder column into the top of the 500 mL round bottom flask

11 5 13 Apply heat to the 500 mL flask in the heating mantle and reduce the extract volume to approximately 10-15 mL

11 5 14 Transfer the extract into a 40 mL vial containing 100 uL of tetradecane, rinsing the 500 mL flask 3 times with 3 mL of the extraction solvent Add the rinsings to the 40 mL vial

11.5 15 Place the 40 mL vials into the nitrogen concentration device and reduce the volume to near dryness Add 4 mL of hexane and swirl the vial Reduce the volume of hexane to near dryness again to complete the solvent exchange If the sample exhibits poor solubility in hexane, add approximately 1 mL of benzene with a pipet to the vial to aid in dissolving the residue Adjust the final volume of the extract with hexane to 12 mL for acid-base cleanup or 2 mL for column cleanup Proceed to sample cleanup in section 11 9

11 6 Waste Dilution

11 6 1 Organic wastes, oil, solids that dissolve in solvent, and non-aqueous sludge samples can be prepared by the waste dilution technique

11 6 2 Tare a clean 40 mL VOA vial on a laboratory balance Add an appropriate amount of sample (e g , 1 0 g) to the VOA vial If a sample is designated for MS/MSD analysis, prepare two additional portions of the sample and label them as the MS and MSD samples. Prepare method blank, LCS/OPR, and LCSD (if required) samples by adding 12 mL of hexane to a 40 mL VOA vial

11 6 3 Record the weights and volumes used on the laboratory bench sheets and initial and date

11 6 4 Add 1.0 ml of the internal standard spiking solution (see section 7.11 3) to the samples, method blanks, and QC samples Record the spike solution number and the volume spiked on the sample prep sheet Initial and date the entry Add hexane to bring the volume to 12 mL If the sample exhibits poor solubility in hexane, add approximately 1 mL of benzene with a pipet to the vial to aid in dissolving the sample

11 6 5 Add 1 0 ml of the PAR native spiking solutions (see section 7 11 2) to the LCS/OPR, LCSD (if required), and MS/MSD samples Record the spike solution identification number and the volume spiked on the sample prep sheet Initial and date the entry

11 6 6 Proceed to sample extract cleanup in section 11 9

11 7 Air Sampling Trains

11 7 1 For media and sample preparation of air sampling trains refer to Knoxville SOP, KNOX-ID-0012

11 8 Macro Extract Concentration by Rapid-Vap

11 8 1 Preheat the unit to the appropriate temperature for the solvent used in the extraction

11 8 2 Set the operating parameters on the programmer For example, if there is 300 ml of a methylene chloride extract, the following parameters are used and adjusted as needed

Temperature	30 °C
Vortex Speed	30%, to be increased at a later time
Nitrogen	7-9 psi
Timer Set	30 minutes

11 8 3 Place 600 ml concentrator tubes containing the extract in the Rapid-Vap Begin concentrating the extract, adjust the vortex speed for the proper rate of concentration

11 8 4 When the extract has been concentrated to less than 20 mL, add approximately 60 mL of hexane Concentrate the extract to a final volume of approximately 2 ml (that is the volume contained in the reservoir tip of the Rapid-Vap) Shut off the nitrogen flow and turn off the Rapid-Vap or remove the 600 mL concentrator tube to prevent further concentration

11 8 5 Transfer the extract to a 40 mL vial with a 9" disposable pipet, rinsing the sample tube three times with 2 mL of hexane Reduce the volume in the 40 mL vial using the N-Evap to approximately 2 mL and proceed to extract cleanup in section 11 9 If no cleanups are to be performed continue with the following steps to dry the extract The sample extracts sometimes contain small amounts of water due to condensation forming on the glassware during the concentration steps Take care to ensure the water is removed

11 8 6 Prepare a small funnel by placing a small plug of pre-cleaned glass wool at the bottom of the funnel and adding a layer of sodium sulfate on top of the glass wool

11 8 7 Pipet the extract from the Rapi-Vap concentrator tube and through the funnel containing the sodium sulfate into a 40 mL vial

11 8.8 Rinse the concentrator tube 3 times with approximately 3 mL of hexane for each rinse Rinse the sodium sulfate funnel with an additional 2 mL of hexane Proceed to micro concentration in section 11 10

11.9 Sample Extract Cleanup

11 9 1 Any or all sample cleanups may be employed to remove sample interferences as necessary The sample batch cleanups must also be performed on the associated quality control samples (method blank, LCS/LCSD) MS/MSD samples must undergo the same cleanup procedures as the associated parent (OS) sample

11 9 2 For 1613B samples that are to be subjected to one or more cleanup steps, add 1 0 mL of the ^{37}Cl-,2,3,7,8-TCDD cleanup standard before any cleanup steps are performed(see section 7 11 6) to each sample extract as well as the method blank and OPR sample extracts

11 9 3 Acid-Base Cleanup

The acid-base cleanup is employed when sample extracts are colored and/or oily in appearance, or if specified by the client or project manager

11 9 3 1 Bring the extract volume up to ~12 mL with hexane in a 40 mL vial

NOTE If the extracts are from fish tissue, omit sections 11 9 3 2 and 11 9 3 3

11 9 3 2 Wash the extract by adding 10 mL of 20% aqueous potassium hydroxide to the vial and gently shaking for 20 seconds If an emulsion begins to form,

discontinue shaking Vent the vial frequently to prevent pressure build up Let the vial stand for 10 minutes or longer until any emulsion present settles out Carefully remove the aqueous layer (the bottom layer) with a glass pipet, taking care not to remove any of the solvent layer or remaining emulsion Repeat the base washing until no color is visible in the base layer (perform a maximum of four base washings)

11 9 3 3 Add 10 mL of 5% (w/v) aqueous sodium chloride to the vial and gently shake for 20 seconds If an emulsion forms, discontinue shaking Vent the vial frequently to prevent pressure build up Let the vial stand for 10 minutes or longer until any emulsion present settles out. Carefully remove the aqueous layer (the bottom layer) with a glass pipet, taking care not to remove any of the solvent layer or remaining emulsion

11 9 3 4 Slowly add 15 mL of concentrated sulfuric acid to the vial and shake for 30 seconds If an emulsion remains from the previous, slowly add concentrated sulfuric acid (drop by drop) to the vial **CAUTION: HEAT CAN BE GENERATED DURING THIS STEP** If an emulsion still exists, discontinue shaking Vent the vial frequently to prevent pressure build up Let the vial stand for 10 minutes or longer until any emulsion settles out Carefully remove the aqueous layer (the bottom layer) with a glass pipet, taking care not to remove any of the solvent layer or remaining emulsion Repeat the acid washing until no color is visible in the acid layer (perform a maximum of four acid washings) An option to employ if the acid layer is large or very dark and thick is to remove the Hexane layer (the top layer) and any emulsion to a fresh 40 ml vial Rinse the vial containing the acid 2 times with 2 ml of Hexane and add these rinsings to the sample vial and then proceed with section 11 9 2 5

11 9 3 5 Add 10 mL 5% (w/v) aqueous sodium chloride to the vial and gently shake for 20 seconds Vent the vial frequently to prevent pressure build up Let the vial stand for 10 minutes or longer until any emulsion present settles out Carefully remove the aqueous layer (the bottom layer) with a glass pipet, taking care not to remove any of the solvent layer or remaining emulsion Dry the hexane extract by adding 1 to 2 grams of sodium sulfate and swirling the vial

11 9 3 6 Reduce the extract volume to approximately 2 ml

11 9 3 7 Proceed to section 11 9 4, silica gel/alumina column cleanup

11 9 4 Silica Gel/Alumina Column Cleanup

Silica gel/alumina column cleanup is employed when sample extracts are clear or after other cleanup techniques have been employed If treated drinking water samples are being analyzed, cleanups may not be necessary

11 9 4 1 Prepare a 20 mm diameter column and a 16mm diameter column for each extract by rinsing, in order, with acetone, toluene, methylene chloride and

hexane Place a large ball of pre-cleaned glass wool in the bottom of each column

11 9 4 2 Mark the level to which the column packings are to be added with a marking pen starting at the top of the glass wool plug and proceeding from bottom to top The levels for each type column are as follows,

20 mm diameter Silica Gel column

12 mm – 2g of 3 3% deactivated silica gel
16 mm – 4g of acidic silica gel
12 mm - 2g of 3 3% deactivated silica gel
10 mm – sodium sulfate
16 mm diameter Alumina Column

40 mm – 6 g of neutral alumina
10 mm – sodium sulfate

11 9 4 3 Place the columns to the lab supports in the hood so that the 20 mm silica gel column is above the 16 mm alumina column Offset the columns slightly so that the packings can be added and the columns rinsed

11 9 4 4 Add the column packing in the order listed above while tapping with a marking pen to column to settle the contents to prevent channeling When the columns have been completely packed, remove the ink markings with a paper towel moistened with methylene chloride.

11 9 4 5 Place a 125 mL glass jar under the lower alumina column to catch the solvent wastes and eluents as they filter through the column

11 9 4 6 Add 20 mL of hexane to each column to rinse the packing Collect the hexane from the columns in the 125 mL glass jar, the columns must be aligned so that the waste does not drip on the surface of the hood When the level of solvent in the silica gel column approaches the top of the packing, move the upper column support so that the tips of the upper columns are inserted into the tops of the lower columns and the solvent must drip into the lower columns

11 9 4 7 Just as the level of hexane reaches the top of the packing in the silica gel column transfer the sample extract into the top of the column Rinse the extract vial 3 times with 1 5 mL of hexane and add each of these rinsings to the silica gel column

11 9 4 8 Just as the solvent level reaches the top of the column packing add 70 mL of hexane (via a solvent bottle top dispenser) into the top of the silica gel column and allow this to drip into and through the alumina column and into the collection jar When the hexane has completely drained from the silica gel column, remove the column from the support rack and dispose of it in the appropriate waste container

11 9 4 9 Just as the level of hexane reaches the top of the packing in the alumina column using a solvent dispenser add 10ml of 5% methylene chloride/hexane mixture Immediately after adding the 5% mixture replace the 125 mL glass jar containing the solvent waste with 40ml vial which has been labeled with the sample workorder number Dispose of the solvent waste in the 125 mL glass jar in the appropriate waste collection container.

11 9 4 10 Just as the level of the 5% mixture reaches the top of the packing in the alumina column add 30 mL of 65% methylene chloride/hexane using a solvent dispenser and continue to catch the eluents in the 40 mL vial

11 9 4 11 When the solvent has completely drained from the alumina column, cap the 40 mL vial containing the eluent and dispose of the alumina column in the appropriate waste container

11 9 4 12 If no further cleanup is to be performed, proceed to final extract micro concentration detailed in Section 11 10 Otherwise, reduce the volume of the extract to approximately 2 mL using the nitrogen micro concentration apparatus and proceed to the next cleanup

11 9 5 Activated Carbon Cleanup

Carbon column cleanups are performed to remove diphenyl ether interferences and when site history indicates they are necessary for removal of other interferences Carbon column cleanups are also performed when sample extracts cause the acid silica layer of the dual column cleanup to become colored along the entire length of the acid silica Most solid samples meet these criteria

11 9 5 1 Prepare a disposable carbon column by cutting off the tapered end of a column to achieve a column approximately 20 cm in length Insert a glass-wool plug of about 1 cm in length approximately 10 cm into the column and pack the column with 5 0 cm of the J T Baker Carbon/Silica Gel mixture (section 7 7 8) Hold the packing by inserting an additional glass wool plug, again about 1 cm in length, in the other end.

11 9 5 2 Pre-elute the column with 10 mL of cyclohexane/methylene chloride (50 50 v/v) Turn the column over and pre-elute in the opposite direction with another 5 mL of cyclohexane/methylene chloride (50 50 v v)

11 9 5 3 When the solvent reaches the glass wool, add the sample extract. Rinse the sample vial 2 times with 2 mL of 50/50 cyclohexane/methylene chloride Add these rinses to the column Elute the column with the following sequence of solvents·

11 9 5 3 1 6 mL of cyclohexane/methylene chloride (50:50 v/v)

11 9 5.3 2 5 mL of methylene chloride/methanol/benzene (75:20 5 v/v)

11 9 5 4 Allow the 75 20 5 methylene chloride/methanol/benzene to drain completely Turn the column over and in the direction of reverse flow elute the PCDD/ PCDF fraction with 30 mL toluene into a 40 mL vial

11 9 5 5 Place vials containing the extract in the nitrogen concentration apparatus and reduce the solvent volume to approximately 0 3 ml

11 10 Micro Extract Concentration by Nitrogen Blowdown

11 10 1 When all cleanups have been completed on the sample, using a Hamilton syringe (see section 6 3 3 2) add 20 uL of the labeled recovery standard spiking solution (see section 7 11 8) to an empty clean 1 1 mL tapered minivial that has been labeled with the sample ID. Mark the level of the recovery standard on the minivial (mark half the level, 10 µL, if the extracts are from treated drinking waters) Record the volume of recovery standard added on the benchsheet

11 10 2 Transfer the concentrated extract into the mini-vial Rinse the 40 ml vial at least twice with a small amount of hexane and add the rinses to the minivial Put the minivial on the N-EVAP nitrogen blowdown and reduce the volume to the mark on the vial Put the cap with PFTE-faced septa securely on the vial Record the final extract volume on the benchsheet

11 10.3 All items listed on the data review check list must be checked by both the prep analyst who performed the extraction and cleanups and the prep analyst who performed the second level review An example data review check list is shown in Figure 4

11 10 4 Transfer the extracts and paperwork to the GC/MS group for analysis

11 11 Sample Extract Analysis

11 11 1 Analyze the sample extracts under the same instrument operating conditions used to perform the instrument calibrations Inject 2 µL into the GC/MS and acquire data until OCDF has eluted from the column

11 11 2 Record analysis information in the instrument logbook The following information is required

Date of analysis
Time of analysis
Instrument data system filename
Analyst
Lab sample identification

Additional information can be recorded in the logbook if necessary

11 11 3 Generate ion chromatograms for the masses listed in Table 21 that encompass the expected retention windows of the PCDD and PCDF homologous series

12. Data Analysis and Calculations

12 1 Refer to Figure 4 for an example data review checklists used to perform and document the review of the data Using the data review checklist, the analyst also creates a narrative which includes any qualifications of the sample data

12 2 Qualitative identification criteria for PCDDs and PCDFs For a gas chromatographic peak to be identified as a PCDD or PCDF, it must meet all of the following criteria

12 2 1 The ion current response for both ions used for quantitative purposes must reach maximum simultaneously (± 2 seconds)

12 2 2 The signal-to-noise ratio (S/N) for each GC peak at each exact m/z must be ≥ 2 5 for positive identification of a PCDD/PCDF compound

12 2 3 The ratio of the integrated areas of the two exact m/z's specified in Table 21 must be within the limits specified in Table 22, or alternatively when performing method 1613B, within ±10 percent of the ratio in the midpoint (CS3) calibration or the calibration verification (VER), whichever is most recent

12 2 4 Method 1613B only - The relative retention time of the peak for a 2,3,7,8-substituted PCDD or PCDF must be within the limits in Table 3

12 2 5 Method 8290, 8290A and 0023A only - For 2,3,7,8-substituted isomers, which have an isotopically labeled internal standard or recovery standard present in the sample extract, the retention time of the two ions used for quantitation purposes must be within -1 to +3 seconds of the isotopically labeled standard

12 2 6 Method 23 and TO-9A only - For 2,3,7,8-substituted isomers, which have an isotopically labeled internal standard or recovery standard present in the sample extract, the retention time of the two ions used for quantitation purposes must be within ±3 seconds of the isotopically labeled standard.

12 2 7 Method 8290, 8290A, 23, 0023A, and TO-9A only - For 2,3,7,8-substituted isomers, which do not have an isotopically labeled internal standard present in the sample extract, the retention time must fall within 0 005 retention time units of the relative retention times measured in the routine calibration

12 2 8 The retention time of peaks representing non-2,3,7,8-substituted PCDDs/PCDFs must be within the retention time windows established in section 10 2 4

12 2 9 No peaks detected in the polychlorinated diphenyl-ether (PCDPE) mass channel in the same retention time region (± 2 sec for method 8290, 8290A & 0023A) as a PCDF peak

12.3 Quantitation for PCDD's and PCDF's

12 3 1 Calculate the Internal Standard and Cleanup Standard Recoveries (Ris) relative to the Recovery Standard according to the following equation

$$R_{is} = \frac{A_{is} \times Q_{rs}}{A_{rs} \times RRF_{is} \times Q_{is}} \times 100\%$$

where·

A_{is} = sum of the areas of the quantitation ions of the appropriate internal standard (cleanup standard is single ion)

Ars = sum of the areas of the quantitation ions of the recovery standard
Qrs = ng of recovery standard added to extract
Qis = ng of internal standard added to sample
RRFis = mean relative response factor of internal standard obtained during initial calibration

Note: In some situations, such as high-volume water sampling or air train samples, the extract is split for multiple analyses In this case, Qrs must be correctly calculated to account for the splitting of extracts before the recovery standard was added

$$Qrs = \frac{Crs \times Vrs}{S}$$

Where.
Qrs = ng of recovery standard added to extract
Crs = concentration of recovery standard added to the split portion of the extract
Vrs = volume of recovery standard added to the split portion of the extract
S = split ratio of the extract (decimal fraction of the extract used)

12 3 2 The split ratio represents the proportion of extract used from splits taken after the addition of internal standards and before the addition of recovery standards The split ratio is calculated as the product of all split ratios generated between these steps

$$S = Spis \times Spcs \times Spfc$$

Where
Spis = the decimal fraction of extract used from split taken once the internal standard has been added and the extraction is performed
Spcs = the decimal fraction of extract used from split taken once the cleanup standard (if used) has been added
Spfc = the decimal fraction of extract used from split taken once the cleanup fractionation column has been run

12 3 3 When properly applied, isotope dilution techniques produce results that are independent of recovery The recovery of each internal standard must be within the limits specified in Table 13 for method 1613B, 8290 or 8290A or in Table 15 for method 23, 0023A, or TO-9A If the recovery of any internal standard is not within the specified limits, calculate the S/N ratio of the internal standard If the S/N is ≥ 10 and the method minimum levels are met, report the data as is with qualifiers in the report and a discussion in the case narrative If the S/N is < 10 or the minimum levels are not achieved, re-extract and re-analyze the sample If the poor internal standard recovery is judged to be a result of sample matrix, a reduced portion of the sample can be re-extracted or additional clean-ups can be employed

12 3 4 Calculate the concentration of the 2,3,7,8 isomers according to the following equation

$$C_{2,3,7,8\ isomers} = \frac{Ata \times Qis}{Ais \times RRF \times Ws}$$

Where

C = Concentration of 2,3,7,8 isomers
Ata = sum of the areas of the quantitation ions of the target analyte
Ais = sum of the areas of the quantitation ions of the appropriate internal standard
Qis = ng of internal standard added to sample
RRF = mean relative response factor from initial calibration
Ws = amount of sample spiked and extracted (grams or liters)

12 3 5 The concentrations of non-2,3,7,8-isomers are calculated using the RRF for the corresponding 2,3,7,8-isomer If more than one 2,3,7,8-isomer exist for a particular level of chlorination, the average of the individual 2,3,7,8-isomer RRF's is used in the calculation

$$C_{non\ 2,3,7,8\ isomer} = \frac{Ata \times Qis}{Ais \times RRF \times Ws}$$

Where
Ata = sum of the areas of the quantitation ions of the non-2,3,7,8 isomer
Ais = sum of the areas of the quantitation ions of the appropriate internal standard
Qis = ng of internal standard added to sample
RRF = mean relative response factor from initial calibration for the corresponding 2,3,7,8 isomer
Ws = amount of sample spiked and extracted (grams or liters)

12 3 6 Calculate the total concentration of all isomers within each homologous series of PCDD's and PCDF's by summing the concentrations of the individual PCDD or PCDF 2,3,7,8 and non-2,3,7,8 isomers

$$C_{Total} = \sum C_{2,3,7,8\ isomers} + \sum C_{non\ 2,3,7,8\ isomers}$$

12 3 7 If solid samples are to be reported on a dry weight basis, the laboratory LIMS system performs the following calculation,

$$\text{Concentration (Dry Weight)} = \frac{C}{\%Solids \div 100}$$

Where
C = Concentration of the target analyte
%Solids = The sample percent solids determined by moisture analysis

12 3 8 If no peaks are present in the region of the ion chromatogram where the compounds of interest are expected to elute, calculate the estimated detection limit (EDL) for that compound according to the following equation

$$EDL = \frac{N \times 2\ 5 \times Qis}{His \times RRFs \times Ws \times Ssl}$$

Where

N	=	average peak to peak noise of quantitation ion signals in the region of the ion chromatogram where the compound of interest is expected to elute
His	=	peak height of quantitation ions for appropriate internal standard
Qis	=	ng of internal standard added to sample
RRFs	=	mean relative response factor of compound for the shift opening and closing standards
W	=	amount of sample spiked and extracted (grams or liters)
Ssl	=	decimal expression of percent solids (optional, if results are requested to be reported on dry weight basis)

Note The percent solids calculation is performed by the laboratory LIMS system prior to final reporting

12 3 9 If peaks are present in the region of the ion chromatogram which do not meet the qualitative criteria listed in section 12 2 3, calculate an Estimated Maximum Possible Concentration (EMPC) Two different calculation formulas can be used depending upon specific client requirements

12 3 9 1 When performing methods 8290, 8290A for EPA regulated analyses where the currently promulgated method is required by law (e g. Trial Burns) and for all other analyses unless the client has specified otherwise, use the equation in section 12 3 4, except that Ata represents the sum of the area under the one peak and of the other peak area calculated using the theoretical chlorine isotope ratio The peak selected to calculate the theoretical area is the one which gives the lower of the two possible results (i e the EMPC is lower than the result calculated from the uncorrected areas)

12 3 9 2 When the client has specifically requested, use the equation in section 12 3 4 without correcting the areas This method gives an EMPC which is always higher than the method above and would be considered the worst case

12 3 10 If peaks are present in the diphenyl ether mass channel at the same retention time as a PCDF peak, the peak cannot be identified as a PCDF Calculate the concentration of the peak using the equation in section 12 3 4 but report the concentration as an Estimated Maximum Possible Concentration

12 3 11 If the concentration in the final extract of any 2,3,7,8-substituted PCDD/PCDF isomer (except OCDD or OCDF) exceeds the upper method calibration limits, a dilution of the extract or a re-extraction of a smaller portion of the sample must be performed. For the other congeners (including OCDD and OCDF), however, report the measured concentration and indicate that the value exceeds the calibration limit by flagging the results with "E" Dilutions of up to 1/10 can be performed on the extract If the compounds that exceed the calibration range cannot be brought within the calibration range by a 1/10 dilution, extraction of a smaller aliquot of sample can be performed or the sample can be analyzed by a more appropriate analytical technique such as HRGC/LRMS Consultation with the client must occur before any re-extraction is performed

12 3 12 Evaluate the ion chromatograms of the PFK lock mass and calibration mass for each MID group The PFK mass intensity must be consistent throughout the retention time of the target compounds Negative excursions or variations in the PFK mass intensity indicate the elution of interferences from the GC column that are causing suppression in the ion source of the mass spectrometer This ion suppression can reduce the instrument sensitivity and quantitative result of any peaks that elute at the same retention time Either additional extract cleanup or dilutions can reduce ion suppression The quantitative results must be carefully evaluated when there is evidence of ion suppression present in the PFK mass traces

12 4 The DB-5 (RTX-5) column does not provide for isomer specificity of 2,3,7,8-TCDF using the operating condition required for this method If a peak is determined to be present at the expected retention time of 2,3,7,8-TCDF and its calculated concentration is above the MinL, the sample extract must be analyzed on the DB-225 (RTX-225) column

12 5 The Minimum Level (MinL) is defined as the level at which the instrument gives acceptable calibration assuming a sample is extracted at the recommended weight or volume and is carried through all normal extraction and analysis procedures Deviation from the extraction amounts or final volumes listed Table 2 changes the MinL The MinL is calculated as shown in the following equation.

$$\mathrm{MinL} = \frac{C\,\mathrm{min} \times Vfe}{Ws}$$

Where

Cmin	=	the concentration the analyte in the lowest calibration standard
Ws	=	amount of sample spiked and extracted (grams or liters)
Vfe	=	the final volume of the extract, corrected for all splits and dilutions

$$\mathrm{V}fe = \frac{Vdel \times DFpr}{Spr \times S}$$

Where

Vdel	=	the volume of extract delivered to the analysis
DFpr	=	the dilution factor for dilutions performed to the final extract
Spr	=	the split ratio for any post-recovery standard splits
S	=	the split ratio for any post-internal standard and post-cleanup standard splits

12 6 The Maximum Level (MaxL) is defined as the concentration or mass of analyte in the sample that corresponds to the highest calibration level in the initial calibration It is equivalent to the concentration of the highest calibration standard, assuming that all method-specified sample weights, volumes, and cleanup procedures have been employed The MaxL is calculated as shown in the following equation

$$\mathrm{M}axL = \frac{C\,\mathrm{max} \times Vfe}{Ws}$$

Where

Cmax = the concentration the analyte in the highest calibration standard Vfe and Ws are defined in Section 12 5

12.7 Flag all compound results in the sample that were detected in the method blank with a "B" qualifier

12 8 Flag all compound results in the sample that are below the minimum level with a "J" qualifier

12 9 Flag all compound results in the sample that are above the upper calibration limit with an "E" qualifier

12 10 Flag all compound results in the sample that are "Estimated Maximum Possible Concentrations" with a "Q" qualifier

12.11 Flag compound results in the sample that exhibit chromatographic evidence of co-eluting compounds with a "C" qualifier

12 12 Flag compound results in the sample that are affected by ion suppression with a "S" qualifier

12 13 Data Review

12 13 1 The analyst who performs the initial data calculations must initial and date the front chromatogram of the raw data package to document that they have performed the qualitative and quantitative analysis on the sample data

12 13 2 A second analyst must verify all qualitative peak identifications. If discrepancies are found, the data must be returned to the analyst who performed the initial peak identification for resolution

12 13 3 A second analyst must check all hand calculation and data entry into calculation programs, databases, or spreadsheets at a frequency of 100 percent If discrepancies are found, the data must be returned to the analyst who performed the initial calculation for resolution

12 13.4 The reviewing analyst must initial and date the front chromatogram of the raw data package to document that they have performed the second level review on the sample data

12 13 5 All items listed on the data review check list must be checked by both the analyst who performed the initial qualitative and quantitative analysis and the analyst who performed the second level review Using the data review checklist, the analyst also creates a narrative which includes any qualifications of the sample data An example data review check list is shown in Figure 4

13. Method Performance

13 1 Method Detection Limit (MDL) - An MDL must be determined for each analyte in each routine matrix prior to the analysis of any samples The procedure for determination of the method detection limit is given in the SOP CA-Q-S-006, current revision, based on 40 CFR Part 136 Appendix B The result of the MDL determination must support the reporting limit MDL summaries are stored on the local area network

13 2 Initial Demonstration of Capability – Each analyst must perform an initial demonstration of capability (IDOC) for each target analyte prior to performing the analysis independently The IDOC is determined by analyzing four replicate spikes (e g , LCSs) as detailed in Test America Knoxville SOP KNOX-QA-0009

13 3 Training Qualification The group/team leader has the responsibility to ensure that this procedure is performed by an associate who has been properly trained in its use and has the required experience Refer to SOP KNOX-QA-0009 current revision for further requirements for performing and documenting initial and on-going demonstrations of capability

14. Pollution Prevention

14 1 All procedures must be conducted in a manner to minimize, as far as practical, the use of solvents, reagents and other chemicals

15. Waste Management

15 1 All waste must be disposed of in accordance with Federal, State and Local regulations Where reasonably feasible, technological changes have been implemented to minimize the potential for pollution of the environment Employees must abide by this method and the policies in section 13 of the Corporate Safety Manual for "Waste Management and Pollution Prevention "

15 2 See the current revision of the KNOX-HS-0002 for specific waste handling guidelines

15 3 Waste Streams Produced by the Procedure· The following waste streams are produced when this method is carried out

- Waste solvents including acetone, toluene, methylene chloride, and hexane from glassware rinsing and sodium sulfate pre-rinsing must be placed in the flammable waste stream, contained in a steel satellite accumulation container type or flammable solvent container
- Miscellaneous disposable glassware, chemical resistant gloves, bench paper and similar materials that might or might not be contaminated/hazardous must be placed in the incinerable laboratory waste stream, contained in a poly satellite accumulation container
- Extracted PUF filters, XAD-2 resin, paper funnel filters, glass wool, fish/crawfish and soil contaminated with solvents must be placed in the incinerable laboratory waste stream, contained in a poly satellite accumulation container
- Contaminated sulfuric acid used during extract cleanup must be placed in the acidic laboratory waste stream, contained in a poly satellite accumulation container or 55 gallon poly drum
- Extracted aqueous samples, contaminated with methylene chloride must be placed in the organic water waste stream, contained in a poly satellite accumulation container
- Silica gel, alumina, carbon and sodium sulfate, from column clean-ups, contaminated with various solvents and eluates must be placed in the incinerable laboratory waste stream, contained in a poly satellite accumulation container

16. References

16 1 TestAmerica Knoxville Quality Assurance Management (QAM), current revision

16 2 EPA Method 1613 Tetra- Through Octa- Chlorinated Dioxins And Furans by Isotope Dilutions HRGC/HRMS, Revision B, October 1994

16 3 USEPA SW-846 "Test Methods for Evaluating Solid Waste" Third Edition, Method 8290, 8290A and 0023A

16 4 USEPA Method 23 – Determination of Polychlorinated Dibenzo-p-dioxins and Polychlorinated Dibenzofurans from Municipal Waste Combustors 40 CFR Part 60 Appendix A

16 5 Method TO-9A Compendium of Methods for the Determination of Toxic Organic Compounds in Ambient Air, Second Edition EPA/625/R-96/010b

16 6 TestAmerica Knoxville SOP, KNOX-ID-0012, Method 0023A and Method 0010 Sampling Train Pre-Sampling Preparation and Sample Extraction Procedure (Includes TO-9A Sampling Components)

16 7 TestAmerica Knoxville SOP, KNOX-QA-0002, Glassware Cleaning, current revision

16.8 TestAmerica Policy, CA-T-P-002, Selection of Calibration Points, current revision

17. Miscellaneous

17 1 Deviations from Reference Method

17 1 1 Spiking levels have been reduced to minimize the amount of dioxin contaminated waste generated by this procedure It has been demonstrated that the performance criteria specified in the method are not affected by this modification

17 1 2 Method 1613B employs a gravimetric determination of sample size rather than a volumetric determination This procedure employs a volumetric determination of sample size to allow reporting of sample concentration in the standard units of pg/L (ppq) This modification has no impact on the performance criteria of this method

17 1 3 The determination of solids content procedure used for aqueous samples is the same as the 1613B procedure used for solid samples rather than the 1613B procedure for aqueous samples The aqueous sample procedure in 1613B is subject to error if the sample density is not exactly 1 0 g/mL

17 1 4 The amount of hexane used in the solvent exchange step has been reduced from that specified in the reference methods The reduction in solvent used is a pollution prevention measure. It has been demonstrated that the performance criteria specified in the method are not affected by this modification

17 1 5 Method 1613B specifies that the sample bottle is rinsed twice with 5 mL of reagent water after the sample is transferred to the separatory funnel This procedure specifies that the sample bottle is rinsed three times with methylene chloride after the sample is transferred to the separatory funnel This modification improves the removal of target compounds from the sample bottle

17 1 6 The separatory funnel is only rinsed once with methylene chloride after the sample is extracted instead of three times as specified in Method 1613B The reduction in

solvent used is a pollution prevention measure It has been demonstrated that the performance criteria specified in the method are not affected by this modification

17 1 7 Toluene volumes and cycle rates for Soxhlet extractors have been optimized for the specific size of glassware used and might not be the same as those specified in the referenced method It has been demonstrated that the performance criteria specified in the method are not affected by this modification.

17 1 8 Soxhlet extracts are not filtered before concentration and solvent exchange The use of glass wool in the extraction thimbles eliminates the transfer of particles to the extraction solvent The column cleanup procedures remove any particulate that might not be removed by the glass wool It has been demonstrated that the performance criteria specified in the methods is not affected by this modification

17 1 9 Particle size determination and reduction as specified in method 1613B is not performed on a routine basis Silica and sand is not added to the Soxhlet extraction thimble as specified in method 1613B These procedures are considered to be outside the scope of the laboratories routine extraction procedures and are only performed on a client specific or project specific basis These procedures, if required, must be specified and documented in the appropriate QAPPs

17 1 10 Benzene is used to aid in dissolving the samples and/or extracts in hexane It has been demonstrated that the performance criteria specified in the methods is not affected by this modification

17 1 11 The absolute retention time requirements in Method 1613 section 15 4 1 1 is not required in this procedure The routine maintenance required of GC columns when analyzing samples from hazardous waste sites makes this requirement virtually impossible to meet in a commercial laboratory environment This requirement provides no additional quality assurance purpose beyond those already provided by the use of labeled internal standards and required relative retention time limits

17 1 12 This procedure provides for additional calculation and reporting of sample specific detection limits and estimated maximum possible concentrations not required by Method 1613 These reporting conventions are similar to those required by EPA SW-846 Method 8290 and expected by data users familiar with EPA Office of Solid Waste program requirements

17 1 13 The acid-base cleanup procedure is carried out in a VOA vial instead of a separatory funnel Disposable glassware is used to decrease the risk of cross contamination The volumes of the washes used have been adjusted for use in the VOA vials It has been demonstrated that the performance criteria specified in the methods is not affected by this modification

17 1 14 The silica gel/alumina column cleanup used in this procedure has been optimized relative to amount and order of packings and can vary from the various columns and packings specified in the referenced methods The solvent volumes and mixtures have been optimized based on evaluation of the elution of native and labeled standards The silica gel and alumina are heated in an oven at 130°C instead of

110°C It has been demonstrated that the performance criteria specified in the methods is not affected by this modification

17 1 15 The carbon column used in this procedure is based on the column specified in method 8280 Silica gel is used as the carbon column support instead of Celite 545® as specified in methods 8290 and 1613B It has been determined that silica gel is less likely to contain contaminants and interferences which are not removed by the precleaning procedures than Celite 545®, yet performs similarly. The solvents and elution schemes used are as specified in method 8280 rather than 8290 and 1613B It has been demonstrated that the performance criteria specified in the methods is not affected by this modification

17 1 16 Methods 8290/8290A do not require dilution and reanalysis of samples for which OCDD exceeds the calibration range Although this allowance is not made by method 1613B, this procedure does not require dilution for OCDD on samples analyzed by that method

17.1 17 The calibration standards specified in method 23 are used for method 0023A and TO-9A

17 1 18 Extracts are stored at room temperature rather than at <10 °C The reference method requires that standards be stored at room temperature Recovery studies performed by Cambridge Isotopes Laboratories (CIL) indicate freezing or refrigeration of standards causes problems with precipitation and irreversible adsorption to the inside surface of the vial CIL recommends the storage of standards and extracts at room temperature as long as they are protected from exposure to UV and evaporative losses

17 2 Summary of modifications to SOP

17 3 Summary of revisions to SOP for revision 8

17 3 1 Changed SOP to reflect EPA Method SW-846 8290A

17.4 Summary of revisions to SOP for revision 7

17.4.1 Changed "Analyze 2µL of the Initial Calibration Verification (ICV) Standard in section 7.9 2 after the completion of the initial calibration prior to sample analysis.

17.4.2 Added the preparation of sodium sulfate and it vendor in sections 7.2 7

17 4 3 Added the amount of potassium hydroxide and DI water in 7 5 2

17 4 4 Added the amounts of sulfuric acid, DI water, silica gel, and methylene chloride in sections 7 6 7, 7.6 7, 7 6 11, 7 7.1

17 4 5 Added vendor for activated carbon and activation process in 7.7 2 and 7 7 3

17 4.6 Added PAR native solution in 7 9 4

17.4.7 Added standard solution information in 7 10.2,7.10.3, 7.10 5 and 7 11.2, 7 11.8

17.4.8 Added the grade and preparation of silica gel in 7 6 6

17.4 9 Added screening process in 11.2

17.4 10 Edited aqueous and solid extraction process

17 5 Summary of revisions to SOP for revision 6

17 5 1 Added an exception to 1613B allowing OCDD over calibration range

17 5 2 Added RLs for biological tissues in Table 2

17 5 3 Added health and safety information to section 5 10 and waste handling information to section 15.2

17 5 4 Changed the preparation of sodium sulfate in sections 7 2 7, 7 3 8, 7 5 6, 7 6 1

17 5 5 Changed the oven temperature for alumina and silica gel in section 7.6 6 and 7 6.9.

17 6 Summary of revisions to SOP for revision 5

17 6 1 Added information to sections 3 37, 8 1, 12 1, 13 1, Appendix I

17 7 Summary of revisions to SOP for revision 4

17 7 1 Corrected the %D for 13C12-1,2,3,6,7,8-HxCDD and –HxCDF for 23 and TO-9A Updated sections 5 and 15 to meet corporate EH&S requirements

17 8 Summary of modifications to SOP for revision 3

17 8 1 Incorporated all PCDD/PCDF analysis methods including 8290, 23, 0023A, and TO-9A into this method

17 8 2 Revised all Tables to reflect requirements for each analysis method

17 8 3 Removed instruction to follow carbon cleanup with silica gel/alumina cleanup

17 8 4 Modified the solids determination procedure in section 11 4 9 1 from that specified by method 1613B

17 9 List of tables and figures referenced in the body of the SOP

17 9 1 Table 1 – Polychlorinated Dibenzodioxins and Furans Determined by Isotope Dilution and Internal Standard High Resolution Gas Chromatography /High Resolution Mass Spectrometry (HRGC/HRMS)

17 9 2 Table 2 – Methods – All, Minimum Levels by Matrix

17 9 3 Table 3 – Methods – 1613B and 8290, Retention Time References, Quantitation References, and Relative Retention Times

17 9 4 Table 4 – Methods – 23, 0023A, and TO-9A, Retention Time References and Quantitation References

17 9 5 Table 5 – Methods – 1613B and 8290, Initial Calibration Standard Concentrations and Acceptance Criteria

17 9 6 Table 6 – Methods – 23, 0023A, and TO-9A, Initial Calibration Standard Concentrations and Acceptance Criteria

17 9.7 Table 7 – Methods – 1613B and 8290, Daily Verification Standard (VER) Concentrations and Acceptance Criteria

17 9 8 Table 8 – Methods – 23, 0023A, and TO-9A, Daily Verification Standard (VER) Concentrations and Acceptance Criteria

17 9 9 Table 9 – Method – 1613B, Initial Precision and Recovery (IPR) Acceptance Criteria

17.9 10 Table 10 – Methods – 8290, 23, 0023A, and TO-9A, Initial Precision and Recovery (IPR) Acceptance Criteria

17 9 11 Table 11 – Laboratory Control Sample (LCS/OPR) Spiking Solution Component Concentrations and Acceptance Limits

17 9 12 Table 12 – Method – 8290 Matrix Spike and Matrix Spike Duplicate Sample (MS/MSD) Spiking Solution Component Concentrations and Acceptance Limits

17 9 13 Table 13- Methods – 1613B and 8290, Internal Standard Spiking Solution Component Concentrations and Acceptance Limits

17 9.14 Table 14 – Method – 1613B, Cleanup Standard Spiking Solution Component Concentrations and Acceptance Limits

17.9 15 Table 15 – Methods – 23, 0023A, and TO-9A, Internal Standard Spiking Solution Component Concentrations and Acceptance Limits

17 9 16 Table 16 – Methods – 23, 0023A, and TO-9A, Surrogate Standard Spiking Solution Component Concentrations and Acceptance Limits

17 9 17 Table 17 – Methods – All, Recovery Standard Spiking Solution Component Concentrations

17 9 18 Table 18 – Rtx-5/DB-5 Column Window Defining Standard Mixture Components – Rtx-5 (DB-5) Column Performance Standard Mixture Components

17 9 19 Table 21 – DB-225 (Rtx-225) Column Performance Standard Mixture Components

17.9 20 Table 21 – Ions Monitored for HRGC/HRMS Analysis of PCDDs and PCDFs

17 9 21 Table 22 – Theoretical Ion Abundance Ratios and Their Control Limits for PCDDs and PCDFs

17 9 22 Figure 1 – Recommended GC Operating Conditions

17 9 23 Figure 2 – Recommended MID Descriptors

17 9 24 Figure 3 – Example Sample Prep Benchsheet

17 9 25 Figure 4 – Example Data Review Checklist

17 9 26 Figure 5 – Aqueous sample Extraction Flowchart

17 9 27 Figure 6 – Solid Sample Extraction Flowchart

17 9 28 Figure 7 – Sample Cleanup Flowchart

17 9 29 Figure 8 – Analysis of PCDD's and PCDF's by HRGC/HRMS Flowchart

17 9 30 Appendix I Lipid Determination

17 9 31 Attachment I LRMS dioxin Screen Strategy

17 9 32 Attachmend II Example of Determination of Sediment Sample Extraction Amounts

17 9 33 Attachment III Example Gravimetric Lipids Data Worksheet

History of Revisions

HISTORY OF REVISION PAGE

REV NO.	DATE	PAGES AFFECTED	REASON FOR REVISION
0	02/26/97	All	Initial version of the SOP
1	08/31/99	All	Procedure review
2	01/28/02	All	Procedure review
3	04/26/03	All	Procedure review
4	11/12/03	56 of 83	Corrected the %D for $^{13}C_{12}$-1,2,3,6,7,8-HxCDD and – HxCDF for 23 and TO-9A Updated sections 5 and 15 to meet corporate EH&S requirements
5	6/18/04	All	Added information to sections 3 37, 8 1, 12 1, 13.1, Appendix I
6	9/27/05	All	Added an exception to 1613B allowing OCDD over calibration range Added health and safety information to section 5 10 and waste handling information to section 15 2 Updated reagent preparation information for sodium sulfate, alumina and silica gel Added RLs for biological tissues in Table 2
7	2/17/07	All	Added dioxin screening and moisture sections in order to determine the appropriate sample dry weight for extraction Edited reagent and standard preparation sections
8	3/11/09	All	Updated SOP to reflect EPA Method 8290A requirements

Table 1

Polychlorinated Dibenzodioxins and Furans Determined by Isotope Dilution and Internal Standard High Resolution Gas Chromatography /High Resolution Mass Spectrometry (HRGC/HRMS)

PCDD's/PCDF's [1] Isomer/Congener	CAS Registry	Labeled Analog	CAS Registry
2,3,7,8-TCDD	1746-01-6	$^{13}C_{12}$-2,3,7,8-TCDD $^{37}Cl_4$-2,3,7,8-TCDD	76523-40-5 85508-50-5
Total TCDD	41903-57-5		
2,3,7,8-TCDF	51207-31-9	$^{13}C_{12}$-2,3,7,8-TCDF	89059-46-1
Total TCDF	55722-27-5		
1,2,3,7,8-PeCDD	40321-76-4	$^{13}C_{12}$-1,2,3,7,8-PeCDD	109719-79-1
Total PeCDD	36088-22-9		
1,2,3,7,8-PeCDF	57117-41-6	$^{13}C_{12}$-1,2,3,7,8-PeCDF	109719-77-9
2,3,4,7,8-PeCDF	57117-31-4	$^{13}C_{12}$-2,3,4,7,8-PeCDF	116843-02-8
Total PeCDF	30402-15-4		
1,2,3,4,7,8-HxCDD	39227-28-6	$^{13}C_{12}$-1,2,3,4,7,8-HxCDD	109719-80-4
1,2,3,6,7,8-HxCDD	57653-85-7	$^{13}C_{12}$-1,2,3,6,7,8-HxCDD	109719-81-5
1,2,3,7,8,9-HxCDD	19408-74-3	$^{13}C_{12}$-1,2,3,7,8,9-HxCDD	109719-82-6
Total HxCDD	34465-46-8		
1,2,3,4,7,8-HxCDF	70648-26-9	$^{13}C_{12}$-1,2,3,4,7,8-HxCDF	114423-98-2
1,2,3,6,7,8-HxCDF	57117-44-9	$^{13}C_{12}$-1,2,3,6,7,8-HxCDF	116843-03-9
2,3,4,6,7,8-HxCDF	60851-34-5	$^{13}C_{12}$-2,3,4,6,7,8-HxCDF	116843-05-1
1,2,3,7,8,9-HxCDF	72918-21-9	$^{13}C_{12}$-1,2,3,7,8,9-HxCDF	116843-04-0
Total HxCDF	55684-94-1		
1,2,3,4,6,7,8-HpCDD	35822-46-9	$^{13}C_{12}$-1,2,3,4,6,7,8-HpCDD	109719-83-7
Total HpCDD	37871-00-4		
1,2,3,4,6,7,8-HpCDF	67562-39-4	$^{13}C_{12}$-1,2,3,4,6,7,8-HpCDF	109719-84-8
1,2,3,4,7,8,9-HpCDF	55673-89-7	$^{13}C_{12}$-1,2,3,4,7,8,9-HpCDF	109719-94-0
Total HpCDF	38998-75-3		
OCDD	3268-87-9	$^{13}C_{12}$-OCDD	114423-97-1
OCDF	39001-02-0	none	

Notes:

1 Polychlorinated dioxins and furans

TCDD = Tetrachlorodibenzo-p-dioxin
PeCDD = Pentachlorodibenzo-p-dioxin
HxCDD = Hexachlorodibenzo-p-dioxin
HpCDD = Heptachlorodibenzo-p-dioxin
OCDD = Octachlorodibenzo-p-dioxin

TCDF = Tetrachlorodibenzofuran
PeCDF = Pentachlorodibenzofuran
HxCDF = Hexachlorodibenzofuran
HpCDF = Heptachlorodibenzofuran
OCDF = Octachlorodibenzofuran

Table 2

Methods – All
Minimum Levels by Matrix

Analyte	Extract (ng/mL) [1]	Water (pg/L) [2]	Solids (pg/g) [3]	Biological Tissue (pg/g) [3]	Waste (pg/g) [4]	Air/Wipe (pg) [5]
2,3,7,8-TCDD	0 5	10	1	1	10	10
2,3,7,8-TCDF	0 5	10	1	1	10	10
1,2,3,7,8-PeCDD	2 5	50	5	5	50	50
1,2,3,7,8-PeCDF	2 5	50	5	5	50	50
2,3,4,7,8-PeCDF	2 5	50	5	5	50	50
1,2,3,4,7,8-HxCDD	2 5	50	5	5	50	50
1,2,3,6,7,8-HxCDD	2 5	50	5	5	50	50
1,2,3,7,8,9-HxCDD	2 5	50	5	5	50	50
1,2,3,4,7,8-HxCDF	2 5	50	5	5	50	50
1,2,3,6,7,8-HxCDF	2 5	50	5	5	50	50
2,3,4,6,7,8-HxCDF	2 5	50	5	5	50	50
1,2,3,7,8,9-HxCDF	2 5	50	5	5	50	50
1,2,3,4,6,7,8-HpCDD	2 5	50	5	5	50	50
1,2,3,4,6,7,8-HpCDF	2 5	50	5	5	50	50
1,2,3,4,7,8,9-HpCDF	2 5	50	5	5	50	50
OCDD	5 0	100	10	10	100	100
OCDF	5 0	100	10	10	100	100

Notes:
1 Concentration in the extract assuming a 20 µL volume
2 Based on a sample volume of 1 0 L
3 Based on a sample volume of 10 0 g
4 Based on a sample volume of 1 0g
5 Based on extraction of the entire sample

Table 3

Methods – 1613B and 8290/8290A
Retention Time References, Quantitation References, and Relative Retention Times

Analyte	Retention Time and Quantitation Reference	Relative Retention Time
Compounds using $^{13}C_{12}$-1,2,3,4-TCDD as the recovery standard		
2,3,7,8-TCDD	$^{13}C_{12}$-2,3,7,8-TCDD	0 999-1 002
2,3,7,8-TCDF	$^{13}C_{12}$-2,3,7,8-TCDF	0 999-1 003
1,2,3,7,8-PeCDD	$^{13}C_{12}$-1,2,3,7,8-PeCDD	0 999-1 002
1,2,3,7,8-PeCDF	$^{13}C_{12}$-1,2,3,7,8-PeCDF	0 999-1 002
2,3,4,7,8-PeCDF	$^{13}C_{12}$-2,3,4,7,8-PeCDF	0 999-1 002
$^{13}C_{12}$-2,3,7,8-TCDD	$^{13}C_{12}$-1,2,3,4-TCDD	0 976-1 043
$^{37}Cl_4$-2,3,7,8-TCDD	$^{13}C_{12}$-1,2,3,4-TCDD	0 989-1 052
$^{13}C_{12}$-2,3,7,8-TCDF	$^{13}C_{12}$-1,2,3,4-TCDD	0 923-1 103
$^{13}C_{12}$-1,2,3,7,8-PeCDD	$^{13}C_{12}$-1,2,3,4-TCDD	1 000-1 567
$^{13}C_{12}$-1,2,3,7,8-PeCDF	$^{13}C_{12}$-1,2,3,4-TCDD	1 000-1 425
$^{13}C_{12}$-2,3,4,7,8-PeCDF	$^{13}C_{12}$-1,2,3,4-TCDD	1 011-1 526
Compounds using $^{13}C_{12}$-1,2,3,7,8,9-HxCDD as the recovery standard		
1,2,3,4,7,8-HxCDD	$^{13}C_{12}$-1,2,3,4,7,8-HxCDD	0 999-1 001
1,2,3,6,7,8-HxCDD	$^{13}C_{12}$-1,2,3,6,7,8-HxCDD	0 998-1 004
1,2,3,7,8,9-HxCDD	--[1]	1 000-1 019
1,2,3,4,7,8-HxCDF	$^{13}C_{12}$-1,2,3,4,7,8-HxCDF	0 999-1 001
1,2,3,6,7,8-HxCDF	$^{13}C_{12}$-1,2,3,6,7,8-HxCDF	0 997-1 005
2,3,4,6,7,8-HxCDF	$^{13}C_{12}$-2,3,4,6,7,8-HxCDF	0 999-1 001
1,2,3,7,8,9-HxCDF	$^{13}C_{12}$-1,2,3,7,8,9-HxCDF	0 999-1 001
1,2,3,4,6,7,8-HpCDD	$^{13}C_{12}$-1,2,3,4,6,7,8-HpCDD	0 999-1 001
1,2,3,4,6,7,8-HpCDF	$^{13}C_{12}$-1,2,3,4,6,7,8-HpCDF	0 999-1 001
1,2,3,4,7,8,9-HpCDF	$^{13}C_{12}$-1,2,3,4,7,8,9-HpCDF	0 999-1 001
OCDD	$^{13}C_{12}$-OCDD	0 999-1 001
OCDF	$^{13}C_{12}$-OCDD	0 999-1 008
$^{13}C_{12}$-1,2,3,4,7,8-HxCDD	$^{13}C_{12}$-1,2,3,7,8,9-HxCDD	0 977-1 000
$^{13}C_{12}$-1,2,3,6,7,8-HxCDD	$^{13}C_{12}$-1,2,3,7,8,9-HxCDD	0 981-1 003
$^{13}C_{12}$-1,2,3,4,7,8-HxCDF	$^{13}C_{12}$-1,2,3,7,8,9-HxCDD	0 944-0 970
$^{13}C_{12}$-1,2,3,6,7,8-HxCDF	$^{13}C_{12}$-1,2,3,7,8,9-HxCDD	0 949-0 975
$^{13}C_{12}$-2,3,4,6,7,8-HxCDF	$^{13}C_{12}$-1,2,3,7,8,9-HxCDD	0 959-1 021
$^{13}C_{12}$-1,2,3,7,8,9-HxCDF	$^{13}C_{12}$-1,2,3,7,8,9-HxCDD	0 977-1 047
$^{13}C_{12}$-1,2,3,4,6,7,8-HpCDD	$^{13}C_{12}$-1,2,3,7,8,9-HxCDD	1 086-1 110
$^{13}C_{12}$-1,2,3,4,6,7,8-HpCDF	$^{13}C_{12}$-1,2,3,7,8,9-HxCDD	1 043-1 085
$^{13}C_{12}$-1,2,3,4,7,8,9-HpCDF	$^{13}C_{12}$-1,2,3,7,8,9-HxCDD	1 057-1 151
$^{13}C_{12}$-OCDD	$^{13}C_{12}$-1,2,3,7,8,9-HxCDD	1 032-1 311

Notes:

1 The retention time reference for 1,2,3,7,8,9-HxCDD is $^{13}C_{12}$-1,2,3,6,7,8-HxCDD 1,2,3,7,8,9-HxCDD is quantified using the averaged responses for $^{13}C_{12}$-1,2,3,4,7,8-HxCDD and $^{13}C_{12}$-1,2,3,6,7,8-HxCDD

Table 4

Methods – 23, 0023A, and TO-9A
Retention Time References and Quantitation References

Analyte	Retention Time and Quantitation Reference
Compounds using $^{13}C_{12}$-1,2,3,4-TCDD as the recovery standard	
2,3,7,8-TCDD	$^{13}C_{12}$-2,3,7,8-TCDD
2,3,7,8-TCDF	$^{13}C_{12}$-2,3,7,8-TCDF
1,2,3,7,8-PeCDD	$^{13}C_{12}$-1,2,3,7,8-PeCDD
1,2,3,7,8-PeCDF	$^{13}C_{12}$-1,2,3,7,8-PeCDF
2,3,4,7,8-PeCDF	$^{13}C_{12}$-1,2,3,7,8-PeCDF
$^{13}C_{12}$-2,3,7,8-TCDD	$^{13}C_{12}$-1,2,3,4-TCDD
$^{37}Cl_4$-2,3,7,8-TCDD	$^{13}C_{12}$-2,3,7,8-TCDD
$^{13}C_{12}$-2,3,7,8-TCDF	$^{13}C_{12}$-1,2,3,4-TCDD
$^{13}C_{12}$-1,2,3,7,8-PeCDD	$^{13}C_{12}$-1,2,3,4-TCDD
$^{13}C_{12}$-1,2,3,7,8-PeCDF	$^{13}C_{12}$-1,2,3,4-TCDD
$^{13}C_{12}$-2,3,4,7,8-PeCDF	$^{13}C_{12}$-1,2,3,7,8-PeCDF
Compounds using $^{13}C_{12}$-1,2,3,7,8,9-HxCDD as the recovery standard	
1,2,3,4,7,8-HxCDD	$^{13}C_{12}$-1,2,3,6,7,8-HxCDD
1,2,3,6,7,8-HxCDD	$^{13}C_{12}$-1,2,3,6,7,8-HxCDD
1,2,3,7,8,9-HxCDD	$^{13}C_{12}$-1,2,3,6,7,8-HxCDD
1,2,3,4,7,8-HxCDF	$^{13}C_{12}$-1,2,3,6,7,8-HxCDF
1,2,3,6,7,8-HxCDF	$^{13}C_{12}$-1,2,3,6,7,8-HxCDF
2,3,4,6,7,8-HxCDF	$^{13}C_{12}$-1,2,3,6,7,8-HxCDF
1,2,3,7,8,9-HxCDF	$^{13}C_{12}$-1,2,3,6,7,8-HxCDF
1,2,3,4,6,7,8-HpCDD	$^{13}C_{12}$-1,2,3,4,6,7,8-HpCDD
1,2,3,4,6,7,8-HpCDF	$^{13}C_{12}$-1,2,3,4,6,7,8-HpCDF
1,2,3,4,7,8,9-HpCDF	$^{13}C_{12}$-1,2,3,4,6,7,8-HpCDF
OCDD	$^{13}C_{12}$-OCDD
OCDF	$^{13}C_{12}$-OCDD
$^{13}C_{12}$-1,2,3,4,7,8-HxCDD	$^{13}C_{12}$-1,2,3,6,7,8-HxCDD
$^{13}C_{12}$-1,2,3,6,7,8-HxCDD	$^{13}C_{12}$-1,2,3,7,8,9-HxCDD
$^{13}C_{12}$-1,2,3,4,7,8-HxCDF	$^{13}C_{12}$-1,2,3,6,7,8-HxCDF
$^{13}C_{12}$-1,2,3,6,7,8-HxCDF	$^{13}C_{12}$-1,2,3,7,8,9-HxCDD
$^{13}C_{12}$-1,2,3,4,6,7,8-HpCDD	$^{13}C_{12}$-1,2,3,7,8,9-HxCDD
$^{13}C_{12}$-1,2,3,4,6,7,8-HpCDF	$^{13}C_{12}$-1,2,3,7,8,9-HxCDD
$^{13}C_{12}$-1,2,3,4,7,8,9-HpCDF	$^{13}C_{12}$-1,2,3,4,6,7,8-HpCDF
$^{13}C_{12}$-OCDD	$^{13}C_{12}$-1,2,3,7,8,9-HxCDD

Table 5

Methods – 1613B and 8290/8290A
Initial Calibration Standard Concentrations and Acceptance Criteria

	CS1	CS2	CS3	CS4	CS5	1613B	8290	8290A
Analyte	**(ng/mL)**	**(ng/mL)**	**(ng/mL)**	**(ng/mL)**	**(ng/mL)**	**%RSD**	**%RSD**	**%RSD**
Native PCDD's and PCDF's								
2,3,7,8-TCDD	0 5	2 0	10	40	200	±20	±20	±20
2,3,7,8-TCDF	0 5	2 0	10	40	200	±20	±20	±20
1,2,3,7,8-PeCDD	2 5	10	50	200	1000	±20	±20	±20
1,2,3,7,8-PeCDF	2 5	10	50	200	1000	±20	±20	±20
2,3,4,7,8-PeCDF	2 5	10	50	200	1000	±20	±20	±20
1,2,3,4,7,8-HxCDD	2 5	10	50	200	1000	±20	±20	±20
1,2,3,6,7,8-HxCDD	2 5	10	50	200	1000	±20	±20	±20
1,2,3,7,8,9-HxCDD	2 5	10	50	200	1000	±35	±20	±20
1,2,3,4,7,8-HxCDF	2 5	10	50	200	1000	±20	±20	±20
1,2,3,6,7,8-HxCDF	2 5	10	50	200	1000	±20	±20	±20
2,3,4,6,7,8-HxCDF	2 5	10	50	200	1000	±20	±20	±20
1,2,3,7,8,9-HxCDF	2 5	10	50	200	1000	±20	±20	±20
1,2,3,4,6,7,8-HpCDD	2 5	10	50	200	1000	±20	±20	±20
1,2,3,4,6,7,8-HpCDF	2 5	10	50	200	1000	±20	±20	±20
1,2,3,4,7,8,9-HpCDF	2 5	10	50	200	1000	±20	±20	±20
OCDD	5 0	20	100	400	2000	±20	±20	±20
OCDF	5 0	20	100	400	2000	±35	±20	±20
Labeled Internal Standards								
$^{13}C_{12}$-2,3,7,8-TCDD	100	100	100	100	100	±35	±30	±20
$^{13}C_{12}$-2,3,7,8-TCDF	100	100	100	100	100	±35	±30	±20
$^{13}C_{12}$-1,2,3,7,8-PeCDD	100	100	100	100	100	±35	±30	±20
$^{13}C_{12}$-1,2,3,7,8-PeCDF	100	100	100	100	100	±35	±30	±20
$^{13}C_{12}$-2,3,4,7,8-PeCDF	100	100	100	100	100	±35	±30	±20
$^{13}C_{12}$-1,2,3,4,7,8-HxCDD	100	100	100	100	100	±35	±30	±20
$^{13}C_{12}$-1,2,3,6,7,8-HxCDD	100	100	100	100	100	±35	±30	±20
$^{13}C_{12}$-1,2,3,4,7,8-HxCDF	100	100	100	100	100	±35	±30	±20
$^{13}C_{12}$-1,2,3,6,7,8-HxCDF	100	100	100	100	100	±35	±30	±20
$^{13}C_{12}$-2,3,4,6,7,8-HxCDF	100	100	100	100	100	±35	±30	±20
$^{13}C_{12}$-1,2,3,7,8,9-HxCDF	100	100	100	100	100	±35	±30	±20
$^{13}C_{12}$-1,2,3,4,6,7,8-HpCDD	100	100	100	100	100	±35	±30	±20
$^{13}C_{12}$-1,2,3,4,6,7,8-HpCDF	100	100	100	100	100	±35	±30	±20
$^{13}C_{12}$-1,2,3,4,7,8,9-HpCDF	100	100	100	100	100	±35	±30	±20
$^{13}C_{12}$-OCDD	200	200	200	200	200	±35	±30	±20
Labeled Cleanup Standard								
$^{37}Cl_4$-2,3,7,8-TCDD	0 5	2 0	10	40	200	±35	-	-
Labeled Recovery Standard								
$^{13}C_{12}$-1,2,3,4-TCDD	100	100	100	100	100	-	-	-
$^{13}C_{12}$-1,2,3,7,8,9-HxCDD	100	100	100	100	100	-	-	-

Table 6

Methods – 23, 0023A, and TO-9A
Initial Calibration Standard Concentrations and Acceptance Criteria

	CS1	CS2	CS3	CS4	CS5	23 / TO-9A	0023A
Analyte	**(ng/mL)**	**(ng/mL)**	**(ng/mL)**	**(ng/mL)**	**(ng/mL)**	**%RSD**	**%RSD**
Native PCDD's and PCDF's							
2,3,7,8-TCDD	0 5	1 0	5	50	100	±25	±20
2,3,7,8-TCDF	0 5	1 0	5	50	100	±25	±20
1,2,3,7,8-PeCDD	2 5	5	25	250	500	±25	±20
1,2,3,7,8-PeCDF	2 5	5	25	250	500	±25	±20
2,3,4,7,8-PeCDF	2 5	5	25	250	500	±25	±20
1,2,3,4,7,8-HxCDD	2 5	5	25	250	500	±25	±20
1,2,3,6,7,8-HxCDD	2 5	5	25	250	500	±25	±20
1,2,3,7,8,9-HxCDD	2 5	5	25	250	500	±25	±20
1,2,3,4,7,8-HxCDF	2 5	5	25	250	500	±25	±20
1,2,3,6,7,8-HxCDF	2 5	5	25	250	500	±25	±20
2,3,4,6,7,8-HxCDF	2 5	5	25	250	500	±25	±20
1,2,3,7,8,9-HxCDF	2 5	5	25	250	500	±25	±20
1,2,3,4,6,7,8-HpCDD	2 5	5	25	250	500	±25	±20
1,2,3,4,6,7,8-HpCDF	2 5	5	25	250	500	±25	±20
1,2,3,4,7,8,9-HpCDF	2 5	5	25	250	500	±25	±20
OCDD	5 0	10	50	500	1000	±25	±20
OCDF	5 0	10	50	500	1000	±30	±20
Labeled Internal Standards							
$^{13}C_{12}$-2,3,7,8-TCDD	100	100	100	100	100	±25	±30
$^{13}C_{12}$-2,3,7,8-TCDF	100	100	100	100	100	±30	±30
$^{13}C_{12}$-1,2,3,7,8-PeCDD	100	100	100	100	100	±30	±30
$^{13}C_{12}$-1,2,3,7,8-PeCDF	100	100	100	100	100	±30	±30
$^{13}C_{12}$-1,2,3,6,7,8-HxCDD	100	100	100	100	100	±25	±30
$^{13}C_{12}$-1,2,3,6,7,8-HxCDF	100	100	100	100	100	±30	±30
$^{13}C_{12}$-1,2,3,4,6,7,8-HpCDD	100	100	100	100	100	±30	±30
$^{13}C_{12}$-1,2,3,4,6,7,8-HpCDF	100	100	100	100	100	±30	±30
$^{13}C_{12}$-OCDD	200	200	200	200	200	±30	±30
Surrogate Standards							
$^{37}Cl_4$-2,3,7,8-TCDD	0 5	1 0	5	50	100	±25	±30
$^{13}C_{12}$-2,3,4,7,8-PeCDF	2 5	5	25	250	500	±25	±30
$^{13}C_{12}$-1,2,3,4,7,8-HxCDD	2 5	5	25	250	500	±25	±30
$^{13}C_{12}$-1,2,3,4,7,8-HxCDF	2 5	5	25	250	500	±25	±30
$^{13}C_{12}$-1,2,3,4,7,8,9-HpCDF	2 5	5	25	250	500	±25	±30
Labeled Recovery Standard							
$^{13}C_{12}$-1,2,3,4-TCDD	100	100	100	100	100	-	-
$^{13}C_{12}$-1,2,3,7,8,9-HxCDD	100	100	100	100	100	-	-

Table 7

Methods – 1613B and 8290/8290A
Daily Verification Standard (VER) Concentrations and Acceptance Criteria

Analyte	VER (ng/mL)	1613B All Isomers (ng/mL)	1613B Tetra only (ng/mL)		8290/8290A Shift Open %D	8290/8290A Shift Close[1] %D
Native PCDD's and PCDF's						
2,3,7,8-TCDD	10	7 8-12 9	8 2-12 3		±20	±25
2,3,7,8-TCDF	10	8 4-12 0	8 6-11 6		±20	±25
1,2,3,7,8-PeCDD	50	39-65	-		±20	±25
1,2,3,7,8-PeCDF	50	41-60	-		±20	±25
2,3,4,7,8-PeCDF	50	41-61	-		±20	±25
1,2,3,4,7,8-HxCDD	50	39-64	-		±20	±25
1,2,3,6,7,8-HxCDD	50	39-64	-		±20	±25
1,2,3,7,8,9-HxCDD	50	41-61	-		±20	±25
1,2,3,4,7,8-HxCDF	50	45-56	-		±20	±25
1,2,3,6,7,8-HxCDF	50	44-57	-		±20	±25
2,3,4,6,7,8-HxCDF	50	44-57	-		±20	±25
1,2,3,7,8,9-HxCDF	50	45-56	-		±20	±25
1,2,3,4,6,7,8-HpCDD	50	43-58	-		±20	±25
1,2,3,4,6,7,8-HpCDF	50	45-55	-		±20	±25
1,2,3,4,7,8,9-HpCDF	50	43-58	-		±20	±25
OCDD	100	79-126	-		±20	±25
OCDF	100	63-159	-		±20	±25
Labeled Internal Standards						
$^{13}C_{12}$-2,3,7,8-TCDD	100	82-121	85-117		±30	±35
$^{13}C_{12}$-2,3,7,8-TCDF	100	71-140	76-131		±30	±35
$^{13}C_{12}$-1,2,3,7,8-PeCDD	100	62-160	-		±30	±35
$^{13}C_{12}$-1,2,3,7,8-PeCDF	100	76-130	-		±30	±35
$^{13}C_{12}$-2,3,4,7,8-PeCDF	100	77-130	-		±30	±35
$^{13}C_{12}$-1,2,3,4,7,8-HxCDD	100	85-117	-		±30	±35
$^{13}C_{12}$-1,2,3,6,7,8-HxCDD	100	85-118	-		±30	±35
$^{13}C_{12}$-1,2,3,4,7,8-HxCDF	100	76-131	-		±30	±35
$^{13}C_{12}$-1,2,3,6,7,8-HxCDF	100	70-143	-		±30	±35
$^{13}C_{12}$-2,3,4,6,7,8-HxCDF	100	73-137	-		±30	±35
$^{13}C_{12}$-1,2,3,7,8,9-HxCDF	100	74-135	-		±30	±35
$^{13}C_{12}$-1,2,3,4,6,7,8-HpCDD	100	72-138	-		±30	±35
$^{13}C_{12}$-1,2,3,4,6,7,8-HpCDF	100	78-129	-		±30	±35
$^{13}C_{12}$-1,2,3,4,7,8,9-HpCDF	100	77-129	-		±30	±35
$^{13}C_{12}$-OCDD	200	96-415	-		±30	±35
Labeled Cleanup Standard						
$^{37}Cl_4$-2,3,7,8-TCDD	10	7 9-12 7	8 3-12 1		-	-
Labeled Recovery Standard						
$^{13}C_{12}$-1,2,3,4-TCDD	100	-	-		-	-
$^{13}C_{12}$-1,2,3,7,8,9-HxCDD	100	-	-		-	-

Notes:

1 If the closing standard %D exceeds the opening %D criteria, the average of the Opening and Closing RF is used instead of the Initial Calibration RF to calculate sample concentrations

Table 8

Methods – 23, 0023A, and TO-9A
Daily Verification Standard (VER) Concentrations and Acceptance Criteria

			0023A	
	VER	23 and TO-9A	Shift Open	Shift Close[1]
Analyte	(ng/mL)	%D	%D	%D
Native PCDD's and PCDF's				
2,3,7,8-TCDD	5	±25	±20	±25
2,3,7,8-TCDF	5	±25	±20	±25
1,2,3,7,8-PeCDD	25	±25	±20	±25
1,2,3,7,8-PeCDF	25	±25	±20	±25
2,3,4,7,8-PeCDF	25	±25	±20	±25
1,2,3,4,7,8-HxCDD	25	±25	±20	±25
1,2,3,6,7,8-HxCDD	25	±25	±20	±25
1,2,3,7,8,9-HxCDD	25	±25	±20	±25
1,2,3,4,7,8-HxCDF	25	±25	±20	±25
1,2,3,6,7,8-HxCDF	25	±25	±20	±25
2,3,4,6,7,8-HxCDF	25	±25	±20	±25
1,2,3,7,8,9-HxCDF	25	±25	±20	±25
1,2,3,4,6,7,8-HpCDD	25	±25	±20	±25
1,2,3,4,6,7,8-HpCDF	25	±25	±20	±25
1,2,3,4,7,8,9-HpCDF	25	±25	±20	±25
OCDD	50	±25	±20	±25
OCDF	50	±30	±20	±25
Labeled Internal Standards				
$^{13}C_{12}$-2,3,7,8-TCDD	100	±25	±30	±35
$^{13}C_{12}$-2,3,7,8-TCDF	100	±30	±30	±35
$^{13}C_{12}$-1,2,3,7,8-PeCDD	100	±30	±30	±35
$^{13}C_{12}$-1,2,3,7,8-PeCDF	100	±30	±30	±35
$^{13}C_{12}$-1,2,3,6,7,8-HxCDD	100	±25	±30	±35
$^{13}C_{12}$-1,2,3,6,7,8-HxCDF	100	±30	±30	±35
$^{13}C_{12}$-1,2,3,4,6,7,8-HpCDD	100	±30	±30	±35
$^{13}C_{12}$-1,2,3,4,6,7,8-HpCDF	100	±30	±30	±35
$^{13}C_{12}$-OCDD	200	±30	±30	±35
Surrogate Standards				
$^{37}Cl_4$-2,3,7,8-TCDD	5	±25	±30	±35
$^{13}C_{12}$-2,3,4,7,8-PeCDF	25	±25	±30	±35
$^{13}C_{12}$-1,2,3,4,7,8-HxCDD	25	±25	±30	±35
$^{13}C_{12}$-1,2,3,4,7,8-HxCDF	25	±25	±30	±35
$^{13}C_{12}$-1,2,3,4,7,8,9-HpCDF	25	±25	±30	±35
Labeled Recovery Standard				
$^{13}C_{12}$-1,2,3,4-TCDD	100	-	-	
$^{13}C_{12}$-1,2,3,7,8,9-HxCDD	100	-	-	

Notes:

1 If the closing standard %D exceeds the opening %D criteria, the average of the Opening and Closing RF is used instead of the Initial Calibration RF to calculate sample concentrations

Table 9

Method – 1613B
Initial Precision and Recovery (IPR) Acceptance Criteria

	Test	1613B			1613B Tetra Only	
Analyte	Conc. (ng/mL)[1]	s[2] (ng/mL)[1]	X[3] (ng/ml)[1]		s[2] (ng/mL)[1]	X[3] (ng/ml)[1]
Native PCDD's and PCDF's						
2,3,7,8-TCDD	10	2 8	8 3-12 9		2 7	8 7-12 4
2,3,7,8-TCDF	10	2 0	8 7-13 7		2 0	9 1-13 1
1,2,3,7,8-PeCDD	50	7 5	38-66		-	-
1,2,3,7,8-PeCDF	50	7 5	43-62		-	-
2,3,4,7,8-PeCDF	50	8 6	36-75		-	-
1,2,3,4,7,8-HxCDD	50	9 4	39-76		-	-
1,2,3,6,7,8-HxCDD	50	7 7	42-62		-	-
1,2,3,7,8,9-HxCDD	50	11 1	37-71		-	-
1,2,3,4,7,8-HxCDF	50	8 7	41-59		-	-
1,2,3,6,7,8-HxCDF	50	6 7	46-60		-	-
2,3,4,6,7,8-HxCDF	50	7 4	37-74		-	-
1,2,3,7,8,9-HxCDF	50	6 4	42-61		-	-
1,2,3,4,6,7,8-HpCDD	50	7 7	38-65		-	-
1,2,3,4,6,7,8-HpCDF	50	6 3	45-56		-	-
1,2,3,4,7,8,9-HpCDF	50	8 1	43-63		-	-
OCDD	100	19	89-127		-	-
OCDF	100	27	74-146		-	-
Labeled Internal Standards						
$^{13}C_{12}$-2,3,7,8-TCDD	50	18 5	14-67		17 5	16-57 5
$^{13}C_{12}$-2,3,7,8-TCDF	50	17 5	15 5-56 5		17	17 5-49 5
$^{13}C_{12}$-1,2,3,7,8-PeCDD	50	19 5	13 5-92		-	-
$^{13}C_{12}$-1,2,3,7,8-PeCDF	50	17 0	13 5-78		-	-
$^{13}C_{12}$-2,3,4,7,8-PeCDF	50	19 0	8-139 5		-	-
$^{13}C_{12}$-1,2,3,4,7,8-HxCDD	50	20 5	14 5-73 5		-	-
$^{13}C_{12}$-1,2,3,6,7,8-HxCDD	50	19 0	17-61		-	-
$^{13}C_{12}$-1,2,3,4,7,8-HxCDF	50	21 5	13 5-76		-	-
$^{13}C_{12}$-1,2,3,6,7,8-HxCDF	50	17 5	15-61		-	-
$^{13}C_{12}$-2,3,4,6,7,8-HxCDF	50	18 5	14 5-68		-	-
$^{13}C_{12}$-1,2,3,7,8,9-HxCDF	50	20 0	12-78 5		-	-
$^{13}C_{12}$-1,2,3,4,6,7,8-HpCDD	50	17 5	17-64 5		-	-
$^{13}C_{12}$-1,2,3,4,6,7,8-HpCDF	50	20 5	16-55		-	-
$^{13}C_{12}$-1,2,3,4,7,8,9-HpCDF	50	20 0	14-70 5		-	-
$^{13}C_{12}$-OCDD	100	47 5	20 5-138		-	-
Labeled Cleanup Standard						
$^{37}Cl_4$-2,3,7,8-TCDD	10	3 6	3 9-15 4		3 4	4 5-13 4

Notes:

1 All specifications are given as concentration in the final extract, assuming a 20-µL volume

2 s = standard deviation of the concentration

3 X = average concentration The acceptance range for average recovery can be normalized (shifted to center on 100% recovery) to compensate for the bias in the collaborative study used to develop the acceptance criteria

Table 10

Methods – 8290, 23, 0023A, and TO-9A
Initial Precision and Recovery (IPR) Acceptance Criteria

Analyte	Test Conc (ng/mL)[1]	s[2] (%Rec)	X[3] (%Rec)
Native PCDD's and PCDF's			
2,3,7,8-TCDD	10	15[4]	70-130[4]
2,3,7,8-TCDF	10	15[4]	70-130[4]
1,2,3,7,8-PeCDD	50	15[4]	70-130[4]
1,2,3,7,8-PeCDF	50	15[4]	70-130[4]
2,3,4,7,8-PeCDF	50	15[4]	70-130[4]
1,2,3,4,7,8-HxCDD	50	15[4]	70-130[4]
1,2,3,6,7,8-HxCDD	50	15[4]	70-130[4]
1,2,3,7,8,9-HxCDD	50	15[4]	70-130[4]
1,2,3,4,7,8-HxCDF	50	15[4]	70-130[4]
1,2,3,6,7,8-HxCDF	50	15[4]	70-130[4]
2,3,4,6,7,8-HxCDF	50	15[4]	70-130[4]
1,2,3,7,8,9-HxCDF	50	15[4]	70-130[4]
1,2,3,4,6,7,8-HpCDD	50	15[4]	70-130[4]
1,2,3,4,6,7,8-HpCDF	50	15[4]	70-130[4]
1,2,3,4,7,8,9-HpCDF	50	15[4]	70-130[4]
OCDD	100	15[4]	70-130[4]
OCDF	100	15[4]	70-130[4]

Notes:

1 All specifications are given as concentration in the final extract, assuming a 20-µL volume
2 s = standard deviation of the percent recovery
3 X = average percent recovery
4 In-house generated historical control-limits can be used in place of the specified limit

Table 11

Laboratory Control Sample (LCS/OPR) Spiking Solution Component Concentrations and Acceptance Limits

Analyte	LCS Solution Conc. (ng/mL)[1]	Final Extract Conc (ng/mL)[2]	1613B OPR Conc (ng/mL)[2]	8290, 23, 0023A, TO-9A Recovery (%Rec)
2,3,7,8-TCDD	0 2	10	6 7-15 8	70-130[4]
2,3,7,8-TCDF	0 2	10	7 5-15 8	70-130[4]
1,2,3,7,8-PeCDD	1 0	50	35-71	70-130[4]
1,2,3,7,8-PeCDF	1 0	50	40-67	70-130[4]
2,3,4,7,8-PeCDF	1 0	50	34-80	70-130[4]
1,2,3,4,7,8-HxCDD	1 0	50	35-82	70-130[4]
1,2,3,6,7,8-HxCDD	1 0	50	38-67	70-130[4]
1,2,3,7,8,9-HxCDD	1 0	50	32-81	70-130[4]
1,2,3,4,7,8-HxCDF	1 0	50	36-67	70-130[4]
1,2,3,6,7,8-HxCDF	1 0	50	42-65	70-130[4]
2,3,4,6,7,8-HxCDF	1 0	50	35-78	70-130[4]
1,2,3,7,8,9-HxCDF	1 0	50	39-65	70-130[4]
1,2,3,4,6,7,8-HpCDD	1 0	50	35-70	70-130[4]
1,2,3,4,6,7,8-HpCDF	1 0	50	41-61	70-130[4]
1,2,3,4,7,8,9-HpCDF	1 0	50	39-69	70-130[4]
OCDD	2 0	100	78-144	70-130[4]
OCDF	2 0	100	63-170	70-130[4]
Tetras Only				
2,3,7,8-TCDD	0 2	10	7 3-14 6	70-130[4]
2,3,7,8-TCDF	0 2	10	8 0-14 7	70-130[4]

Notes:

1 1 0 mL of this solution is added to the OPR sample before extraction (see section 7 11 1)
2 The final extract concentration is based on an extract volume of 20-µL
3 Spike concentrations are based on a 1 0 L extraction for Water, 10 0g extraction for Solids, and entire sample extraction for Air/Wipe samples
4 In-house generated historical control-limits can be used in place of the specified limit

Table 12

Method – 8290/8290A
Matrix Spike and Matrix Spike Duplicate Sample (MS/MSD) Spiking Solution Component Concentrations and Acceptance Limits[1]

Analyte	LCS Solution Conc. (ng/mL)[2]	Final Extract Conc (ng/mL)[3]	8290 Recovery (%Rec)	8290 Precision (RPD)
2,3,7,8-TCDD	0 2	10	70-130[4]	±15[4]
2,3,7,8-TCDF	0 2	10	70-130[4]	±15[4]
1,2,3,7,8-PeCDD	1 0	50	70-130[4]	±15[4]
1,2,3,7,8-PeCDF	1 0	50	70-130[4]	±15[4]
2,3,4,7,8-PeCDF	1 0	50	70-130[4]	±15[4]
1,2,3,4,7,8-HxCDD	1 0	50	70-130[4]	±15[4]
1,2,3,6,7,8-HxCDD	1 0	50	70-130[4]	±15[4]
1,2,3,7,8,9-HxCDD	1 0	50	70-130[4]	±15[4]
1,2,3,4,7,8-HxCDF	1 0	50	70-130[4]	±15[4]
1,2,3,6,7,8-HxCDF	1 0	50	70-130[4]	±15[4]
2,3,4,6,7,8-HxCDF	1 0	50	70-130[4]	±15[4]
1,2,3,7,8,9-HxCDF	1 0	50	70-130[4]	±15[4]
1,2,3,4,6,7,8-HpCDD	1 0	50	70-130[4]	±15[4]
1,2,3,4,6,7,8-HpCDF	1 0	50	70-130[4]	±15[4]
1,2,3,4,7,8,9-HpCDF	1 0	50	70-130[4]	±15[4]
OCDD	2 0	100	70-130[4]	±15[4]
OCDF	2 0	100	70-130[4]	±15[4]

Notes:
1 If insufficient sample exists for MS/MSD analysis, these limits apply to LCS/LCSD samples
2 mL of this solution is added to the OPR sample before extraction (see section 7 11 2)
3 The final extract concentration is based on an extract volume of 20-µL
4 In-house generated historical control-limits can be used in place of the specified limit

Table 13

Methods – 1613B and 8290/8290A
Internal Standard Spiking Solution Component Concentrations and Acceptance Limits

Labeled Analyte	Solution Conc (ng/mL)[1]	Test Conc. (ng/mL)[2]	1613B OPR Conc (ng/mL)[2]	1613B Sample Conc (ng/mL)[2]	8290 Recovery (%Rec)
$^{13}C_{12}$-2,3,7,8-TCDD	1 0	50	10 0-87 5	12 5-82 0	40-135
$^{13}C_{12}$-2,3,7,8-TCDF	1 0	50	11 0-76 0	12 0-84 5	40-135
$^{13}C_{12}$-1,2,3,7,8-PeCDD	1 0	50	10 5-113 5	12 5-90 5	40-135
$^{13}C_{12}$-1,2,3,7,8-PeCDF	1 0	50	10 5-96 0	12 0-92 5	40-135
$^{13}C_{12}$-2,3,4,7,8-PeCDF	1 0	50	6 5-164 0	10 5-89 0	40-135
$^{13}C_{12}$-1,2,3,4,7,8-HxCDD	1 0	50	10 5-96 5	16 0-70 5	40-135
$^{13}C_{12}$-1,2,3,6,7,8-HxCDD	1 0	50	12 5-81 5	14 0-65 0	40-135
$^{13}C_{12}$-1,2,3,4,7,8-HxCDF	1 0	50	9 5-101 0	13 0-76 0	40-135
$^{13}C_{12}$-1,2,3,6,7,8-HxCDF	1 0	50	10 5-79 5	13 0-61 5	40-135
$^{13}C_{12}$-2,3,4,6,7,8-HxCDF	1 0	50	11 0-88 0	14 0-68 0	40-135
$^{13}C_{12}$-1,2,3,7,8,9-HxCDF	1 0	50	8 5-102 5	14 5-73 5	40-135
$^{13}C_{12}$-1,2,3,4,6,7,8-HpCDD	1 0	50	13 0-83 0	11 5-70 0	40-135
$^{13}C_{12}$-1,2,3,4,6,7,8-HpCDF	1 0	50	10 5-79 0	14 0-71 5	40-135
$^{13}C_{12}$-1,2,3,4,7,8,9-HpCDF	1 0	50	10 0-93 0	13 0-69 0	40-135
$^{13}C_{12}$-OCDD	2 0	100	13 0-198 5	17 0-157	40-135
Tetras Only					
$^{13}C_{12}$-2,3,7,8-TCDD	1 0	50	12 5-70 5	15 5-68 5	40-135
$^{13}C_{12}$-2,3,7,8-TCDF	1 0	50	13 0-63 0	14 5-70 0	40-135

Notes:

1 1 0 mL of the Internal Standard Spiking Solution is added to each sample, method blank and LCS/OPR sample prior to extraction (see section 7 11 3)

2 Specifications given as concentration in the final extract, assuming a 20-µL volume

Table 14

Method – 1613B
Cleanup Standard Spiking Solution Component Concentrations and Acceptance Limits

Labeled Analyte	Solution Conc (ng/mL)[1]	Test Conc. (ng/mL)[2]	1613B OPR Conc (ng/mL)[2]	1613B Sample Conc (ng/mL)[2]	1613B OPR Tetra Only Conc (ng/mL)[2]	1613B Sample Tetra Only Conc (ng/mL)[2]
$^{37}Cl_4$-2,3,7,8-TCDD	0 2	10	3 1-19 1	3 5-19 7	3 7-15 8	4 2-16 4

Notes:

1 1 0 mL of the Cleanup Standard Spiking Solution is added to each sample, method blank and LCS/OPR sample prior to cleanup (see section 7 11 4)

2 Specifications given as concentration in the final extract, assuming a 20-µL volume

Table 15

Methods – 23, 0023A, and TO-9A
Internal Standard Spiking Solution Component Concentrations and Acceptance Limits

Labeled Analyte	Solution Conc (ng/mL)[1]	Test Conc. (ng/mL)[2]	23 Recovery (%Rec)	0023A Recovery (%Rec)	TO-9A Recovery (%Rec)
$^{13}C_{12}$-2,3,7,8-TCDD	1 0	50	40-130	40-135	50-120
$^{13}C_{12}$-2,3,7,8-TCDF	1 0	50	40-130	40-135	50-120
$^{13}C_{12}$-1,2,3,7,8-PeCDD	1 0	50	40-130	40-135	50-120
$^{13}C_{12}$-1,2,3,7,8-PeCDF	1 0	50	40-130	40-135	50-120
$^{13}C_{12}$-1,2,3,6,7,8-HxCDD	1 0	50	40-130	40-135	50-120
$^{13}C_{12}$-1,2,3,6,7,8-HxCDF	1 0	50	40-130	40-135	50-120
$^{13}C_{12}$-1,2,3,4,6,7,8-HpCDD	1 0	50	25-130	40-135	40-120
$^{13}C_{12}$-1,2,3,4,6,7,8-HpCDF	1 0	50	25-130	40-135	40-120
$^{13}C_{12}$-OCDD	2 0	100	25-130	40-135	40-120

Notes:
1 1 0 mL of the Internal Standard Spiking Solution is added to each sample, method blank and LCS/OPR sample prior to extraction (see section 7 11 3)
2 Specifications given as concentration in the final extract, assuming a 20-µL volume

Table 16

Methods – 23, 0023A, and TO-9A
Surrogate Standard Spiking Solution Component Concentrations and Acceptance Limits

Labeled Analyte	Solution Conc (ng/mL)[1]	Test Conc. (ng/mL)[2]	23 Recovery (%Rec)	0023A Recovery (%Rec)	TO-9A Recovery (%Rec)
$^{37}Cl_4$-2,3,7,8-TCDD	20	100	70-130	70-130	50-120
$^{13}C_{12}$-2,3,4,7,8-PeCDF	20	100	70-130	70-130	50-120
$^{13}C_{12}$-1,2,3,4,7,8-HxCDD	20	100	70-130	70-130	50-120
$^{13}C_{12}$-1,2,3,4,7,8-HxCDF	20	100	70-130	70-130	50-120
$^{13}C_{12}$-1,2,3,4,7,8,9-HpCDF	20	100	70-130	70-130	40-120

Notes:
1 100 µL of the Surrogate Standard Spiking Solution is added to each sample train prior to sampling (see section 7 11 5)
2 Specifications given as concentration in the final extract, assuming a 20-µL volume

Table 17

Methods – All
Recovery Standard Spiking Solution Component Concentrations

Labeled Analyte	Solution Conc (µg/mL)[1]	Test Conc. (ng/mL)[2]
$^{13}C_{12}$-1,2,3,4-TCDD	0 1	100
$^{13}C_{12}$-1,2,3,7,8,9-HxCDD	0 1	100

Notes:

1 20 µL of the Recovery Standard Spiking Solution is added to each sample, method blank and LCS/OPR sample prior to analysis (see section 7 11 8)

2 Specifications given as concentration in the final extract, assuming a 20-µL volume

Table 18

Rtx-5/DB-5 Column Window Defining Standard Mixture Components

Congener	First Eluted	Last Eluted
TCDF	1,3,6,8-	1,2,8,9-
TCDD	1,3,6,8-	1,2,8,9-
PeCDF	1,3,4,6,8-	1,2,3,8,9-
PeCDD	1,2,4,6,8-/1,2,4,7,9-	1,2,3,8,9-
HxCDF	1,2,3,4,6,8-	1,2,3,4,8,9-
HxCDD	1,2,4,6,7,9-/1,2,4,6,8,9-	1,2,3,4,6,7-
HpCDF	1,2,3,4,6,7,8-	1,2,3,4,7,8,9-
HpCDD	1,2,3,4,6,7,9-	1,2,3,4,6,7,8-

Table 19

Rtx-5 (DB-5) Column Performance Standard Mixture Components

Isomer
1,2,3,7/1,2,3,8-TCDD
1,2,3,9-TCDD
2,3,7,8-TCDD

Table 20

DB-225 (Rtx-225) Column Performance Standard Mixture Components

Isomer
2,3,4,7-TCDF
2,3,7,8-TCDF
1,2,3,9-TCDF

Table 21

Ions Monitored for HRGC/HRMS Analysis of PCDDs and PCDFs

Descriptor	Accurate Mass[1]	Ion ID	Elemental Composition	Analyte
1	292 9825	LOCK	C_7F_{11}	PFK
	303 9016	M	$C_{12}H_4{}^{35}Cl_4O$	TCDF
	305 8987	M+2	$C_{12}H_4{}^{35}Cl_3{}^{37}ClO$	TCDF
	315 9419	M	$^{13}C_{12}H_4{}^{35}Cl_4O$	TCDF (S)
	317 9389	M+2	$^{13}C_{12}H_4{}^{35}Cl_3{}^{37}ClO$	TCDF (S)
	319 8965	M	$C_{12}H_4{}^{35}Cl_4O_2$	TCDD
	321 8936	M+2	$C_{12}H_4{}^{35}Cl_3{}^{37}ClO_2$	TCDD
	327 8847	M	$C_{12}H_4{}^{37}Cl_4O_2$	TCDD
	331 9368	M	$^{13}C_{12}H_4{}^{35}Cl_4O_2$	TCDD (S)
	333 9338	M+2	$^{13}C_{12}H_4{}^{35}Cl_3{}^{37}ClO_2$	TCDD (S)
	342 9792	QC	C_8F_{13}	PFK
	375 8364	M+2	$C_{12}H_4{}^{35}Cl_5{}^{37}ClO$	HxCDPE
2	330 9792	LOCK	C_7F_{13}	PFK
	339 8597	M+2	$C_{12}H_3{}^{35}Cl_4{}^{37}ClO$	PeCDF
	341 8567	M+4	$C_{12}H_3{}^{35}Cl_3{}^{37}Cl_2O$	PeCDF
	351 9000	M+2	$^{13}C_{12}H_3{}^{35}Cl_4{}^{37}ClO$	PeCDF (S)
	353 8970	M+4	$^{13}C_{12}H_3{}^{35}Cl_3{}^{37}Cl_2O$	PeCDF (S)
	355 8546	M+2	$C_{12}H_3{}^{35}Cl_4{}^{37}ClO_2$	PeCDD
	357 8516	M+4	$C_{12}H_3{}^{35}Cl_3{}^{37}Cl_2O_2$	PeCDD
	367 8949	M+2	$^{13}C_{12}H_3{}^{35}Cl_4{}^{37}ClO_2$	PeCDD (S)
	369 8919	M+4	$^{13}C_{12}H_3{}^{35}Cl_3{}^{37}Cl_2O_2$	PeCDD (S)
	380 9760	QC	C_8F_{15}	PFK
	409 7974	M+2	$C_{12}H_3{}^{35}Cl_6{}^{37}ClO$	HpCDPE
3	373 8208	M+2	$C_{12}H_2{}^{35}Cl_5{}^{37}ClO$	HxCDF
	375 8178	M+4	$C_{12}H_2{}^{35}Cl_4{}^{37}Cl_2O$	HxCDF
	380 9760	LOCK	C_8F_{15}	PFK
	383 8639	M	$^{13}C_{12}H_2{}^{35}Cl_6O$	HxCDF (S)
	385 8610	M+2	$^{13}C_{12}H_2{}^{35}Cl_5{}^{37}ClO$	HxCDF (S)
	389 8156	M+2	$C_{12}H_2{}^{35}Cl_5{}^{37}ClO_2$	HxCDD
	391 8127	M+4	$C_{12}H_2{}^{35}Cl_4{}^{37}Cl_2O_2$	HxCDD
	401 8559	M+2	$^{13}C_{12}H_2{}^{35}Cl_5{}^{37}ClO_2$	HxCDD (S)
	403 8529	M+4	$^{13}C_{12}H_2{}^{35}Cl_4{}^{37}Cl_2O_2$	HxCDD (S)
	404 9760	QC	$C_{10}F_{15}$	PFK
	445 7555	M+4	$C_{12}H_2{}^{35}Cl_6{}^{37}Cl_2O$	OCDPE

Table 21 (Continued)

Ions Monitored for HRGC/HRMS Analysis of PCDDs and PCDFs

Descriptor	Accurate Mass[1]	Ion ID	Elemental Composition	Analyte
4	404 9760	LOCK	$C_{10}F_{15}$	PFK
	407 7818	M+2	$C_{12}H\,^{35}Cl_6\,^{37}Cl\,0$	HpCDF
	409 7788	M+4	$C_{12}H\,^{35}Cl_5\,^{37}Cl_2\,0$	HpCDF
	417 8250	M	$^{13}C_{12}H\,^{35}Cl_7\,0$	HpCDF (S)
	419 8220	M+2	$^{13}C_{12}H\,^{35}Cl_6\,^{37}Cl\,0$	HpCDF (S)
	423 7767	M+2	$C_{12}H\,^{35}Cl_6\,^{37}Cl\,0_2$	HpCDD
	425 7737	M+4	$C_{12}H\,^{35}Cl_5\,^{37}Cl_2\,0_2$	HpCDD
	435 8169	M+2	$^{13}C_{12}H\,^{35}Cl_6\,^{37}Cl\,0_2$	HpCDD (S)
	437 8140	M+4	$^{13}C_{12}H\,^{35}Cl_5\,^{37}Cl_2\,0_2$	HpCDD (S)
	442 9728	QC	$C_{10}F_{17}$	PFK
	479 7165	M+4	$C_{12}H\,^{35}Cl_7\,^{37}Cl_2\,0$	NCDPE
5	430 9728	LOCK	C_9F_{17}	PFK
	441 7428	M+2	$C_{12}\,^{35}Cl_7\,^{37}Cl\,0$	OCDF
	443 7399	M+4	$C_{12}\,^{35}Cl_6\,^{37}Cl_2\,0$	OCDF
	457 7377	M+2	$C_{12}\,^{35}Cl_7\,^{37}Cl\,0_2$	OCDD
	459 7348	M+4	$C_{12}\,^{35}Cl_6\,^{37}Cl_2\,0_2$	OCDD
	469 7780	M+2	$^{13}C_{12}\,^{35}Cl_7\,^{37}Cl\,0_2$	OCDD (S)
	471 7750	M+4	$^{13}C_{12}\,^{35}Cl_6\,^{37}Cl_2\,0_2$	OCDD (S)
	480 9696	QC	$C_{10}F_{19}$	PFK
	513 6775	M+4	$C_{12}\,^{35}Cl_8\,^{37}Cl_2\,0$	DCDPE

Notes:

1 Nuclidic masses used

H = 1 007825 C = 12 00000 ^{13}C = 13 003355 F = 18 9984
O = 15 994915 ^{35}Cl = 34 968853 ^{37}Cl = 36 965903

Table 22

Theoretical Ion Abundance Ratios and Their Control Limits for PCDDs and PCDFs

Number of Chlorine Atoms	Ion Type	Theoretical Ratio	Control Limits Lower	Control Limits Upper
4	M/M+2	0 77	0 65	0 89
5	M+2/M+4	1 55	1 32	1 78
6	M+2/M+4	1 24	1 05	1 43
6 [1]	M/M+2	0 51	0 43	0 59
7	M+2/M+4	1 04/1 05 [3]	0 88	1 20
7 [2]	M/M+2	0 44	0 37	0 51
8	M+2/M+4	0 89	0 76	1 02

Notes:

1 Used for ^{13}C-HxCDF (IS)
2 Used for ^{13}C-HpCDF (IS)
3 Method 1613B Theoretical Ratio

Figure 1

Rtx-5 Recommended GC Operating Conditions

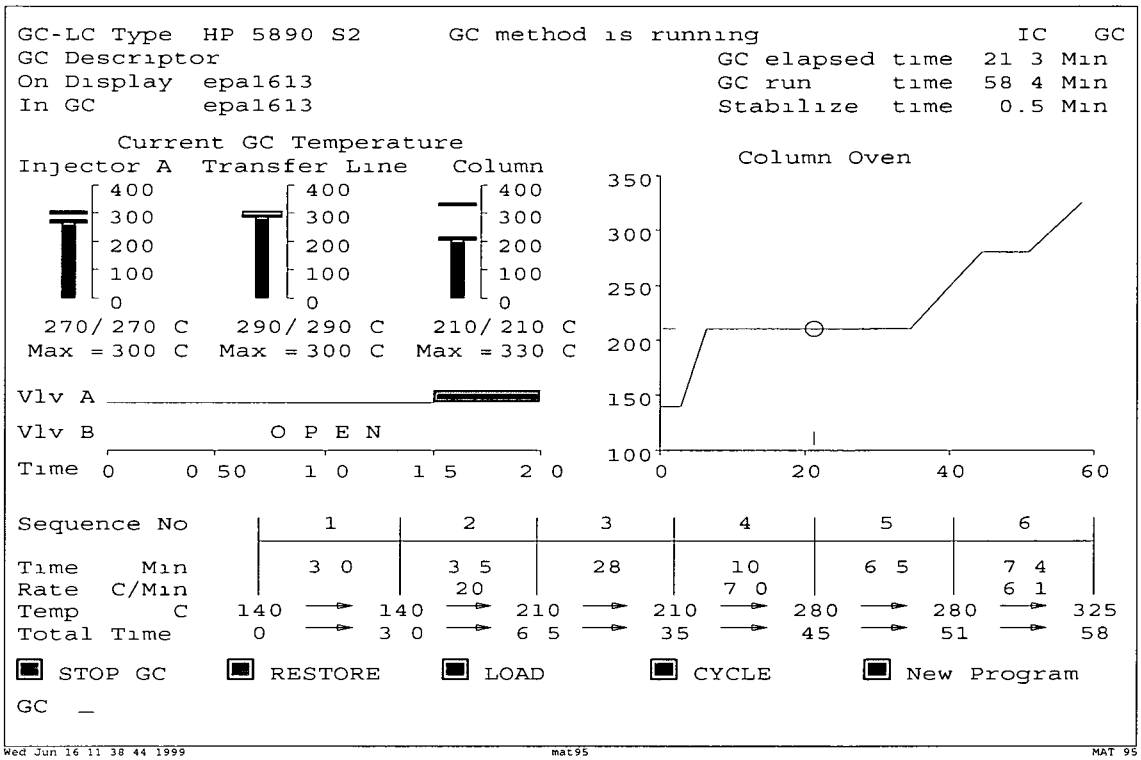

DB-225 Recommended GC Operating Conditions

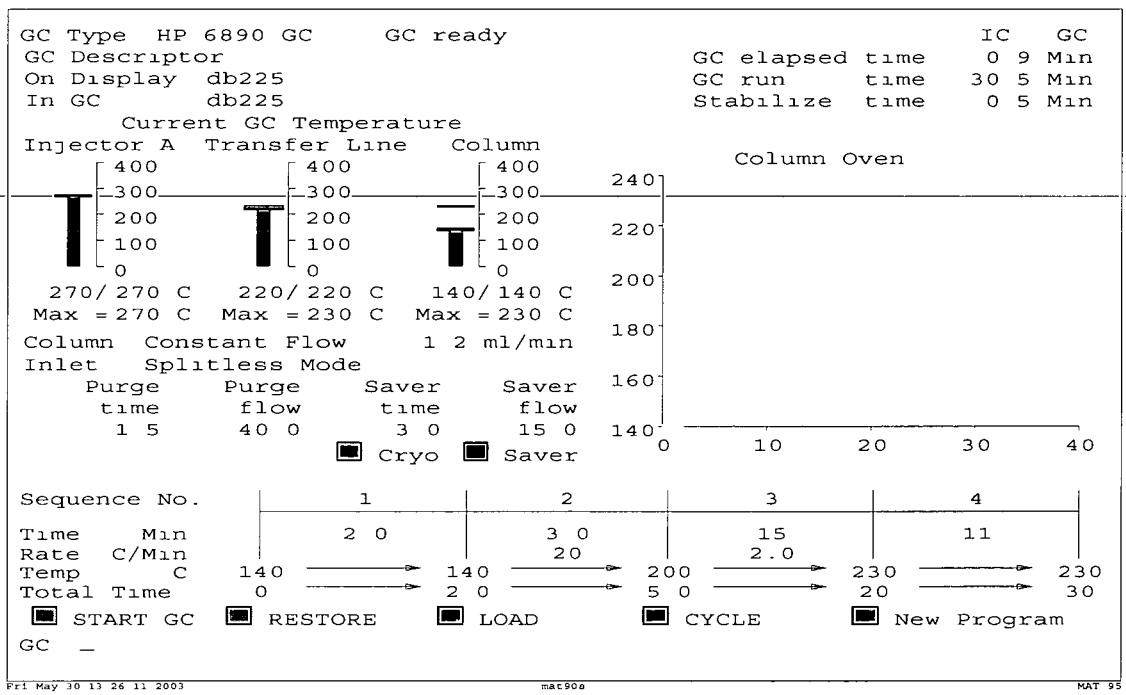

Figure 2

Rtx-5 Recommended MID Descriptors

```
MID Set Up Parameters
 MID File                          epa1613
 Measure/lock ratio  (X)              1
 Set Damping relay   (T)          FALSE
 Width first lock    (A)           0 20 amu
 Electric jump time  (E)             10 ms
 Magnetic jump time  (D)             60 ms
 Offset              (O)            100 cts
 Electric range      (R)            300 %
 Sweep peak width    (W)           3 00
 Acq mode          (C|P)           Cent mode
 MID mode      (J|M|L|N)           Lock mode

MID  Time Windows
 #  Start  Measure  End        Cycletime
 1   8 00  28 12  36:12 min   1.00 sec
 2  36 12   7 28  43.40 min   1 00 sec
 3  43 40   5 49  49 30 min   1 00 sec
 4  49 30   5 00  54 30 min   1 00 sec
 5  54 30   3 50  58 20 min   1 00 sec
 6
 7
 8
 9

Clear Menu      Clear Times      Clear Masses
Stop MID        SAVE             Main

MID _
```

```
MID Masses for Time Window   1
 #      mass    F int  gr time(ms)
 1    292.9825 l  10   1      8 19
 2    303.9016     1   1     81 92
 3    305 8987     1   1     81 92
 4    315 9419     1   1     81.92
 5    317 9389     1   1     81.92
 6    319 8965     1   1     81.92
 7    321 8936     1   1     81 92
 8    327 8847     1   1     81 92
 9    331 9368     1   1     81 92
10    333 9338     1   1     81 92
11    342 9792 c  10   1      8 19
12    375 8364     1   1     81 92
13
14
15
16
17
18
19
20
21
22
23
24

Lock Mass    Cali Mass
```

Wed Jun 16 11 39 22 1999 mat95 MAT 95

```
MID Set Up Parameters
 MID File                          epa1613
 Measure/lock ratio  (X)              1
 Set Damping relay   (T)          FALSE
 Width first lock    (A)           0 20 amu
 Electric jump time  (E)             10 ms
 Magnetic jump time  (D)             60 ms
 Offset              (O)            100 cts
 Electric range      (R)            300 %
 Sweep peak width    (W)           3 00
 Acq mode          (C|P)           Cent mode
 MID mode      (J|M|L|N)           Lock mode

MID  Time Windows
 #  Start  Measure  End        Cycletime
 1   8 00  28:12  36:12 min   1.00 sec
 2  36 12   7·28  43:40 min   1 00 sec
 3  43·40   5·49  49:30 min   1 00 sec
 4  49:30   5 00  54·30 min   1 00 sec
 5  54:30   3 50  58 20 min   1 00 sec
 6
 7
 8
 9

Clear Menu      Clear Times      Clear Masses
Stop MID        SAVE             Main

MID _
```

```
MID Masses for Time Window   2
 #      mass    F int  gr time(ms)
 1    330 9792 l  10   1      8 19
 2    339 8597     1   1     91 48
 3    341 8567     1   1     91 48
 4    351.9000     1   1     91 48
 5    353.8970     1   1     91 48
 6    355.8546     1   1     91 48
 7    357 8516     1   1     91 48
 8    367 8949     1   1     91 48
 9    369 8919     1   1     91 48
10    380 9760 c  10   1      8.19
11    409 7974     1   1     91 48
12
13
14
15
16
17
18
19
20
21
22
23
24

Lock Mass    Cali Mass
```

Wed Jun 16 11 39 27 1999 mat95 MAT 95

Figure 2 **Continued**

Rtx-5 Recommended MID Descriptors

```
MID Set Up Parameters
 MID File                          epa1613
 Measure/lock ratio  (X)              1
 Set Damping relay   (T)          FALSE
 Width first lock    (A)           0 20 amu
 Electric jump time  (E)             10 ms
 Magnetic jump time  (D)             60 ms
 Offset              (O)            100 cts
 Electric range      (R)            300 %
 Sweep peak width    (W)           3 00
 Acq mode          (C|P)           Cent mode
 MID mode      (J|M|L|N)           Lock mode

 MID  Time Windows
 #  Start  Measure  End        Cycletime
 1   8 00  28 12  36 12 min   1 00 sec
 2  36 12   7 28  43 40 min   1 00 sec
 3  43 40   5 49  49 30 min   1 00 sec
 4  49 30   5 00  54 30 min   1 00 sec
 5  54:30   3 50  58 20 min   1 00 sec
 6
 7
 8
 9

 Clear Menu      Clear Times      Clear Masses
 Stop MID        SAVE             Main

MID _
```

```
 MID Masses for Time Window   3
 #      mass    F int  gr time(ms)
 1    373 8208      1   1    91 48
 2    375 8178      1   1    91 48
 3    380 9760 l   10   1     8 19
 4    383 8639      1   1    91 48
 5    385 8610      1   1    91 48
 6    389 8156      1   1    91 48
 7    391 8127      1   1    91 48
 8    401 8559      1   1    91 48
 9    403 8529      1   1    91 48
10    404 9760 c   10   1     8 19
11    445 7555      1   1    91 48
12
13
14
15
16
17
18
19
20
21
22
23
24

 Lock Mass   Cali Mass
```

Wed Jun 16 11 39 32 1999 mat95 MAT 95

```
MID Set Up Parameters
 MID File                          epa1613
 Measure/lock ratio  (X)              1
 Set Damping relay   (T)          FALSE
 Width first lock    (A)           0 20 amu
 Electric jump time  (E)             10 ms
 Magnetic jump time  (D)             60 ms
 Offset              (O)            100 cts
 Electric range      (R)            300 %
 Sweep peak width    (W)           3 00
 Acq mode          (C|P)           Cent mode
 MID mode      (J|M|L|N)           Lock mode

 MID  Time Windows
 #  Start  Measure  End        Cycletime
 1   8 00  28 12  36 12 min   1 00 sec
 2  36 12   7 28  43 40 min   1 00 sec
 3  43 40   5 49  49:30 min   1 00 sec
 4  49 30   5 00  54:30 min   1 00 sec
 5  54.30   3 50  58:20 min   1 00 sec
 6
 7
 8
 9

 Clear Menu      Clear Times      Clear Masses
 Stop MID        SAVE             Main

MID _
```

```
 MID Masses for Time Window   4
 #      mass    F int  gr time(ms)
 1    404 9760 l   10   1     8 19
 2    407 7818      1   1    91 48
 3    409 7788      1   1    91 48
 4    417 8250      1   1    91 48
 5    419 8220      1   1    91 48
 6    423 7767      1   1    91 48
 7    425 7737      1   1    91 48
 8    435 8169      1   1    91 48
 9    437 8140      1   1    91 48
10    442.9728 c   10   1     8 19
11    479 7165      1   1    91 48
12
13
14
15
16
17
18
19
20
21
22
23
24

 Lock Mass   Cali Mass
```

Wed Jun 16 11 39 37 1999 mat95 MAT 95

Figure 2 Continued

Rtx-5 Recommended MID Descriptors

```
MID Set Up Parameters
 MID File                          epa1613
 Measure/lock ratio  (X)              1
 Set Damping relay   (T)          FALSE
 Width first lock    (A)          0 20 amu
 Electric jump time  (E)             10 ms
 Magnetic jump time  (D)             60 ms
 Offset              (O)            100 cts
 Electric range      (R)            300 %
 Sweep peak width    (W)          3 00
 Acq mode          (C|P)          Cent mode
 MID mode      (J|M|L|N)          Lock mode

 MID  Time Windows
 #  Start  Measure  End        Cycletime
 1   8·00  28 12  36 12 min   1 00 sec
 2  36:12   7 28  43 40 min   1 00 sec
 3  43·40   5 49  49 30 min   1 00 sec
 4  49 30   5.00  54 30 min   1 00 sec
 5  54 30   3.50  58 20 min   1 00 sec
 6
 7
 8
 9

 Clear Menu      Clear Times      Clear Masses
 Stop MID        SAVE             Main

MID _
```

```
 MID Masses for Time Window   5
 #      mass    F int  gr time(ms)
 1    430 9728 l  10   1     10 92
 2    441 7428     1   1    120 15
 3    443 7399     1   1    120 15
 4    457 7377     1   1    120 15
 5    459 7348     1   1    120 15
 6    469.7780     1   1    120 15
 7    471 7750     1   1    120 15
 8    480 9696 c  10   1     10 92
 9    513 6775     1   1    120 15
10
11
12
13
14
15
16
17
18
19
20
21
22
23
24

 Lock Mass   Cali Mass
```

Wed Jun 16 11 39 43 1999 mat95 MAT 95

DB-225 Recommended MID Descriptor

```
MID Set Up Parameters
 MID File                          db225
 Measure/lock ratio  (X)              1
 Set Damping relay   (T)          TRUE
 Width first lock    (A)          0 20 amu
 Electric jump time  (E)             10 ms
 Magnetic jump time  (D)             60 ms
 Offset              (O)            100 cts
 Electric range      (R)            300 %
 Sweep peak width    (W)          3 00
 Acq mode          (C|P)          Cent mode
 MID mode      (J|M|L|N)          Lock mode

 MID  Time Windows
 #  Start  Measure  End        Cycletime
 1   8 00  22 30  30 30 min   1 00 sec
 2
 3
 4
 5
 6
 7
 8
 9

 Clear Menu      Clear Times      Clear Masses
 Start MID       RESTORE          Main

MID _
```

```
 MID Masses for Time Window   1
 #      mass    F int  gr time(ms)
 1    292 9825 l  10   1      8 19
 2    303 9016     1   1     81 92
 3    305 8987     1   1     81 92
 4    315 9419     1   1     81 92
 5    317.9389     1   1     81 92
 6    319.8965     1   1     81 92
 7    321 8936     1   1     81 92
 8    327 8847     1   1     81 92
 9    331 9368     1   1     81 92
10    333 9338     1   1     81 92
11    342 9792 c  10   1      8 19
12    375 8364     1   1     81 92
13
14
15
16
17
18
19
20
21
22
23
24

 Lock Mass   Cali Mass
```

Fri May 30 13 22 09 2003 mat90s MAT 95

Figure 3

Example Sample Prep Benchsheets

Test America Knoxville - Specialty Organics Group - Sample Tracking Sheet - Organic Preparation Group

QC Batch No 9055311 **Internal Std. Spiked By** _____ **Verified By** _____ **Date** _____

Sodium Sulfate Lot· _____ **Native LCS/D Spiked By** _____ **Verified By·** _____ **Date·** _____

(only for Waters) **Native MS/D Spiked By** _____ **Verified By·** _____ **Date** _____

Work Order Number		Filtered Y/N?	Vol of Sampling Surrogate (uL)	Soxhlet Started (Date/Time)	Soxhlet Finished (Date/Time	Blow Down (Initial/Date)	Recovery Standard (Book Page)	Recovery Std Vol (uL)	Vol Delivered (uL)	Comments
K7FJX1AC										
K7FJ41AC										
K7FJ51AC										
K7FJ61AC										
K7FJ81AC										
K7FJ91AC										
K7FKA1AC										
K7MH41AA	B									
K7MH41AC	C									
K7MH41AD	L									

Comments _____

Blk Matrix _____ W B Temp _____

Extraction Solvent _____ **Lot #** _____

Balance ID _____
Volume of Alt Standard _____
Split Ratios Post I S _____
Post F C _____
Post C S _____
Post R S _____

ID034R5 doc, 12/12/2008

Figure 3 Continued

Example Sample Prep Benchsheets

Test America Knoxville

Specialty Organics Group - Cleanup Tracking Sheet - Organic Preparation Group

QC Batch No 9055311 **Cleanup Std Spiked By** _____ **Verified By** _____ Date _____

Lot #s

Deact. Silica _____ MeCl2 (A) _____ (B) _____ (C) _____ Toluene _____

Acid Silica _____ Hexane (1) _____ (2) _____ Cyclohexane _____ Ethyl Ether

Alumina _____ Benzene _____ _____

Sodium Sulfate _____ Methanol _____

Work Order Number		Cleanup Spike (Book Page)	Cleanup Spike Volume (uL)	SilicaGel (A) Alumina Col(1) (Initial/Date)	Acid/Base Wash (Initial/Date)	Carbon Column (Initial/Date) (B)	Florisil Column (Initial/Date) (2)	Mercury Cleanup (Initial/Date)	TBA Cleanup (Initial/Date)	Other Cleanup (Initial/Date) (C)	Comments
K7FJX1AC											
K7FJ41AC											
K7FJ51AC											
K7FJ61AC											
K7FJ81AC											
K7FJ91AC											
K7FKA1AC											
K7MH41AA	B										
K7MH41AC	C										
K7MH41AD	L										

ID033R4 doc, 080108

Figure 3 Continued

Example Sample Prep Benchsheets

Test America Knoxville
Specialty Organics Group - Sample Tracking Sheet - GC/MS Analysis Group

QC Batch No **9068226** Relinquished to GC/MS By _____ Date _____

Received in GC/MS By _____ Date _____

Work Order #		Column RTX-5				Column RTX-5				Column DB-225			
		Date	Instrument	Analyst	Code	Date	Instrument	Analyst	Code	Date	Instrument	Analyst	Code
K71P3 1AA													
K71P6 1AA													
K71P6 1AC	S												
K71P6 1AD	D												
K71P8 1AA													
K71QA 1AA													
K71QD 1AA													
K71QF 1AA													
K71QG 1AA													
K73FA 1AA													
K78FC 1AA	B												
K78FC 1AC	C												

Comments _____

ID035R3 doc 12/05/07

Figure 4

Example Sample Prep Data Review Checklist

TestAmerica Knoxville Specialty Organics Preparation Batch Review/Checklist Batch#_____

☐ KNOX ID-0004 rev 8 ☐ KNOX ID-0012M rev 2 ☐ KNOX ID-0013 rev 7 ☐ KNOX ID-001c rev c

Review Items	N/A	Yes	No	If No why is data reportable?	2nd Level
1 Does the batch contain no more than 20 field samples? (Excluding MB LCS LCSD MS & MSD)					
2 Were the samples extracted by the proper method?					
3 Were the samples extracted within the required holding times?					
4 For waters by 1613B if visible solids were present were solids determined to be ≤ 1%?					
5 Were all project specific requirements met as noted on the Lot Checklists and Sample Worksheets?					
6 Were all required QC samples prepared & extracted with the batch at method required frequency?					
7 Were MS Run# properly assigned and samples entered on QC tracking Sheet?					
8 Were samples requested properly and request form completed, signed, and dated?					
9 Were the correct weights and volumes entered in Quantims for all samples?					
10 Were the internal standards properly spiked and the spikes verified? Were the spike solution ID and spike volumes entered correctly and verified?					
11 Were alternate standards properly spiked and the spikes verified? Were the spike solution ID and spike volumes entered correctly and verified?					
12 Were all cleanup steps properly documented by initials and date?					
13 Was the final volume checked and verified against the supplemental benchsheet and Quantims?					
14 Are the final extracts free of water precipitates multiple phases and color?					
15 Were all appropriate notes and observations recorded on the prep benchsheet and in Quantims?					
16 Were all Quantime batch information completed including • Batch reviewed • Correct volumes entered • Correct completion date entered • Samples released					
17 Does the prep batch paperwork package contain all required documentation which has been properly and completely filled out including • Prep Benchsheet • Supplemental Benchsheet • Standard concentration forms or copies of logbook pages for all IS RS SS CS Native and Alternate standards • Lot Checklists for all lots in the batch • Sample worksheets for all samples in the batch in proper order as recorded on tracking sheet					
18 Are all nonconformances documented appropriately and copy included with deliverable?					

ID025R11 doc 031109

Figure 4 Continued

Example Sample Data Review Checklist

TestAmerica Knoxville Dioxin GC/MS Initial Calibration Data Review / Narrative Checklist
Method 8290/8290A - KNOX-ID-0004-R8

PFK Date/Time:		Inst:		Win Filename		Col Perf Filename:	

CS1 Filename	CS2 Filename	CS3 Filename	CS4 Filename	CS5 Filename

Review Items	N/A	Yes	No	If No, why is data reportable?	2nd Level
1 Was the mass resolution documented before beginning the initial calibration?					
2 Was the instrument resolution >10 000 (<100 ppm) on PFK m/z 304 9824 and m/z 380 9760 (at reduced voltage)?					
3 Was the measured exact mass of m/z 380 9760 (PFK) within 5 ppm at reduced accelerating voltage?					
4 Was the Window Defining Mixture analyzed and the MID switchpoints set to encompass the retention time windows of each congener group?					
5 Was the Column Performance solution analyzed and the %Valley ≤25 for separation between 2378 TCDD/F and the closest eluting non 2378 isomer?					
6 Were the five calibration standard solutions at the concentrations specified in Table 5 of the SOP analyzed?					
7 Was date/time of analysis verified between analysis header and logbook as correct?					
8 Were the response factors calculated for each labeled standard and unlabeled native analyte using the SOP specified reference compound (Table 5) quantitation ions (Table 22) and formula (Section 10 2 6)?					
9 Are the relative retention times of all PCDDs/PCDFs and all labeled compounds within the limits specified in Table 3?					
10 Are %RSD ≤20% for all unlabeled native analytes?					
11 **8290** are %RSD ≤30% for all labeled internal standards?					
12 **8090A** are %RSD ≤20% for all labeled internal standards?					
13 Are all S/N ratios ≥10 for the GC signals in each EICP (extracted ion chromatographic profile) including internal standards?					
14 Are the ion abundance ratios for all labeled and unlabeled analytes within the control limits specified in Table 22 of the SOP?					
15 Was the second source (Wellington) ICV standard analyzed and the %D calculated and within the acceptance criteria of < ±35%?					
16 If manual integrations were performed are they clearly identified initialed and dated?					
17 Were before/after chromatograms reviewed to determine whether the software and manual integrations were appropriate?					
18 Were manual integrations performed properly?					
19 If criteria were not met was a NCM generated approved by supervisor and copy included in folder?					
20 Does the ICAL folder contain **complete** data in the following order? Data review checklist a **complete** runlog Avg %RSD summary Ratio summary Calculation summary PFK resolution/peak match documentation Total RIC EICP s and manual integration - for window and all standards in order from low to high standard ICV Summary Table Calculation Summary and chromatograms?					

Analyst	Date	2nd Level Reviewer	Date:
Comments:		Comments:	

Figure 4 Continued

Example Data Review Checklist

TestAmerica Knoxville Dioxin GC/MS Continuing Calibration Review / Narrative Checklist
Method 8290/8290A - KNOX-ID-0004-R8

Start PFK		**Ver Filename:**		**Inst**	
End PFK		**Win Filename:**		**ICAL Date**	
		Col Perf Filename:			
		End Ver Filename:			

Review Items	N/A	Yes	No	If No, why is data reportable?	2nd Level
1 Was the mass resolution documented at both the beginning and end of the 12 hour shift?					
2 Was the instrument resolution >10,000 (<100 ppm) on PFK m/z 304 9824 and m/z 380 9760 (at reduced voltage)?					
3 Was the measured exact mass of m/z 380 9760 (PFK) within 5 ppm at reduced accelerating voltage?					
4 Was date/time of analysis verified between analysis header and logbook as correct?					
5 Was the Window Defining Mixture analyzed and the MID switchpoints set to encompass the retention time windows of each congener group?					
6 Was the Column Performance solution analyzed and the %Valley ≤25 for separation between 2378-TCDD/F and the closest eluting non-2378 isomer?					
7 Were continuing calibrations performed at the beginning and end of the 12-hour period, with successful mass resolution and GC resolution performance checks?					
8 Were the response factors calculated for each labeled standard and unlabeled native analyte using the SOP specified reference compound (Table 3), quantitation ions (Table 22), and formula (Section 10 2 6)?					
9 Are the measured RRFs for each compound within the specified control limits in Table 7 for all PCDDs/PCDFs?					
10 Are the relative retention times of all PCDDs/PCDFs and all labeled compounds within the limits specified in Table 3?					
11 Are all S/N ratios ≥10 for the GC signals in each EICP (extracted ion chromatographic profile) including internal standards?					
12 Are the ion abundance ratios for all labeled and unlabeled analytes within the control limits specified in Table 22 of the SOP?					
13 If manual integrations were performed, are they clearly identified, initialed and dated?					
14 Were before/after chromatograms reviewed to determine whether the software and manual integrations were appropriate?					
15 Were manual integrations performed properly?					
16 If criteria were not met, was a NCM generated, approved by supervisor, and copy included in folder?					
17 Does the CCAL folder contain **complete** data in the following order Data review checklist, a **complete** runlog, CCAL summary, Ratio summary, Calculation summary, PFK resolution/peak match documentation, Total RIC, EICP's and manual integration for window and all standards?					

Analyst	**Date**	**2nd Level Reviewer**	**Date**
Comments		**Comments**	

Figure 4 Continued

Example Data Review Checklist

TestAmerica Knoxville Dioxin GC/MS Data Review / Narrative Checklist LOT #_____
Method 8290/8290A- KNOX-ID-0004-R8 Page 1 of 1 Batch#_____

Review Items A Initial Calibration	N/A	Yes	No	Why is data reportable?	2nd Level
1 Was the correct ICAL used for quantitation? (Check 1 2 compounds for batch by manually calculating concentration using the ICAL avg RF)					
B. Continuing Calibration	N/A	Yes	No		2nd
1 Has a Continuing Calibration Checklist been completed for each analytical batch?					
C Client Sample AND QC Sample Results	N/A	Yes	No		2nd
1 Were all special project requirements met?					
2 Were the header information, prep factors, and dilution factors verified?					
3 Is logbook date/time of analysis correct?					
4 Sample analyses done within preparation and analytical holding time (HT)? *If no list samples* _____				☐ HT expired upon receipt ☐* Client requested analysis after HT expired ☐ Re-extraction done after HT expired	
5 Are internal standards within QC limits specified in Table 13? *If no, list samples and reason (e.g* **sur1***)* Sample Reason Sample Reason ____ ____ ____ ____ ____ ____ ____ ____ ____ ____ ____ ____ ____ ____ ____ ____				☐* **[sup]** Ion suppression due to matrix ☐* **[low]** Low recovery S/N >10 and EDL<ML ☐ **[sam]** Not enough sample to re-extract ☐ **[dil]** Dilution showed acceptable %R ☐ **[mtx]** Obvious matrix interference Further cleanup not possible ☐* **[unk]** At client s request data was flagged as estimated and released without further investigation	
6 Were reported PCDD/Fs which did not meet the criteria below, properly calculated and reported as EMPCs? • RT of 2378 isomers within -1 to +3 seconds of associated labeled isomer • RT of non 2378 isomers within established first/last windows • Both native ions maximized within ±2 seconds • Ion abundance ratios within the control limits specified in Table 22 • No corresponding peak at PCDPE mass					
7 Were all 2378 TCDF hits ≥ ML confirmed by analysis on DB 225?					
8 Are positive results > ML within calibration range? *If no list samples*				☐ OCDD/F or non 2378 exceeded calibration range ☐ Sample extracted at lowest possible volume	
9 Are all manual integrations performed properly and clearly identified and approved?					
10 Were before/after chromatograms reviewed to determine whether the software and manual integrations were appropriate?					
11 Final report acceptable? (Results correct, DLs calculated correctly, units correct, IS %R correct, appropriate flags used, dilution factor correct, and extraction/ analysis dates correct)					
12 Was a narrative prepared and all deviations noted?					
D Preparation/Matrix QC	N/A	Yes	No	Why is data reportable?	2nd
1 LCS(OPR) done per prep batch and all analytes within the limits specified in QuantIMS reference data?				☐* Reanalysis not possible insufficient sample ☐ LCS %R high and affected analyte(s) were <ML in associated samples	
2 Method blank done per prep batch, method/instrument blank analyzed with each sequence and analytes present in the method blank ≤ ML? *If no, list blank ID* _____				☐ Sample results are > 20x higher than blank ☐* There is no analyte > RL in the samples associated with method blank ☐* Reanalysis not possible-insufficient sample	
3 MS/MSD recoveries and RPDs within laboratory generated QC limits? *If no list MS/MSD* _____				☐ LCS acceptable indicating sample matrix effects ☐ LCS acceptable high analyte concentration ☐ LCS acceptable lack of sample homogeneity	
E Other	N/A	Yes	No		2nd
1 Are all nonconformances documented appropriately and copy included with deliverable?					

Analyst	Date	Analyst:	Date
Comments:		Comments:	

* Such action must be taken in consultation with client

Figure 5

Aqueous Sample Extraction Flowchart

Figure 6

Solid Sample Extraction Flowchart

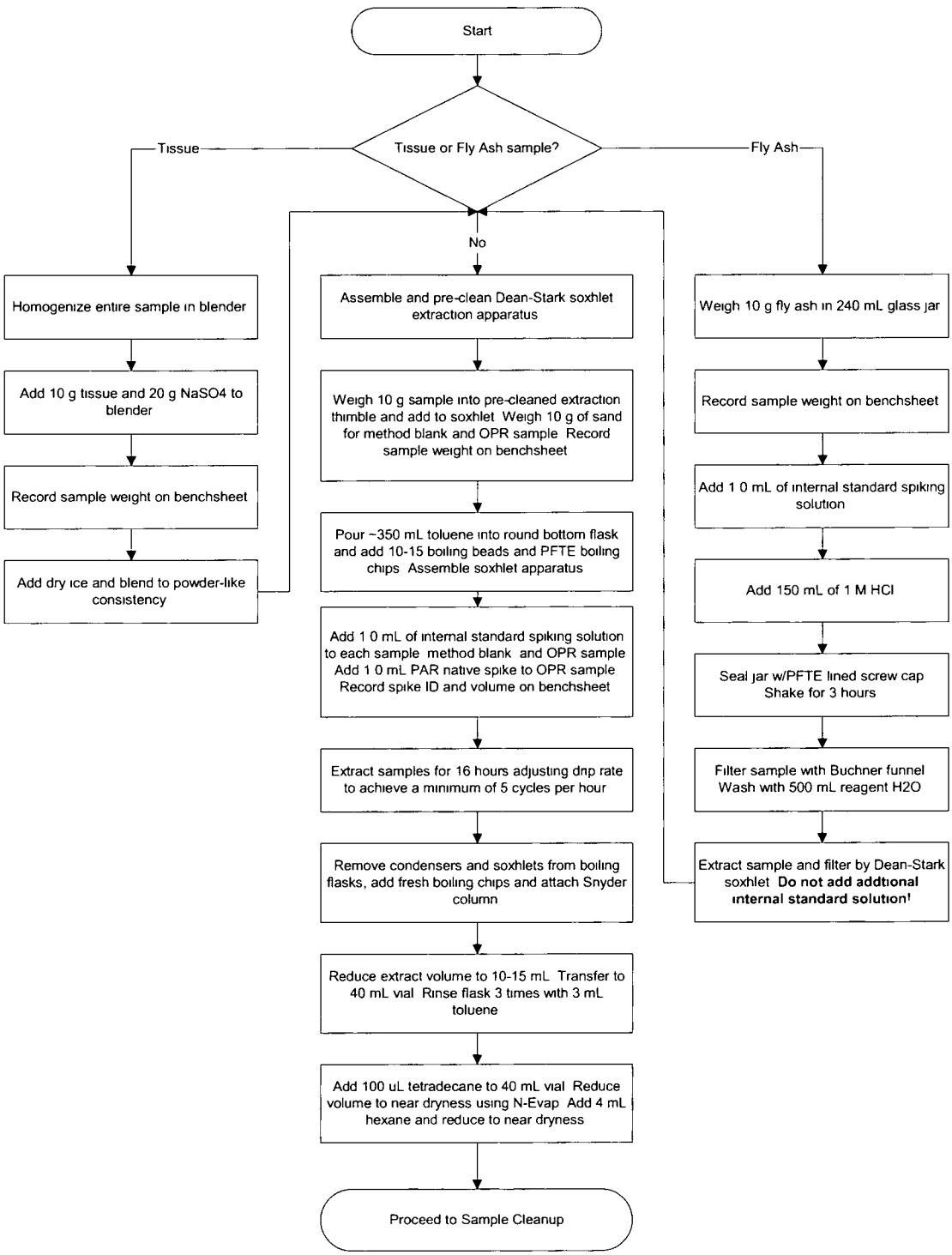

Figure 7

Sample Cleanup Flowchart

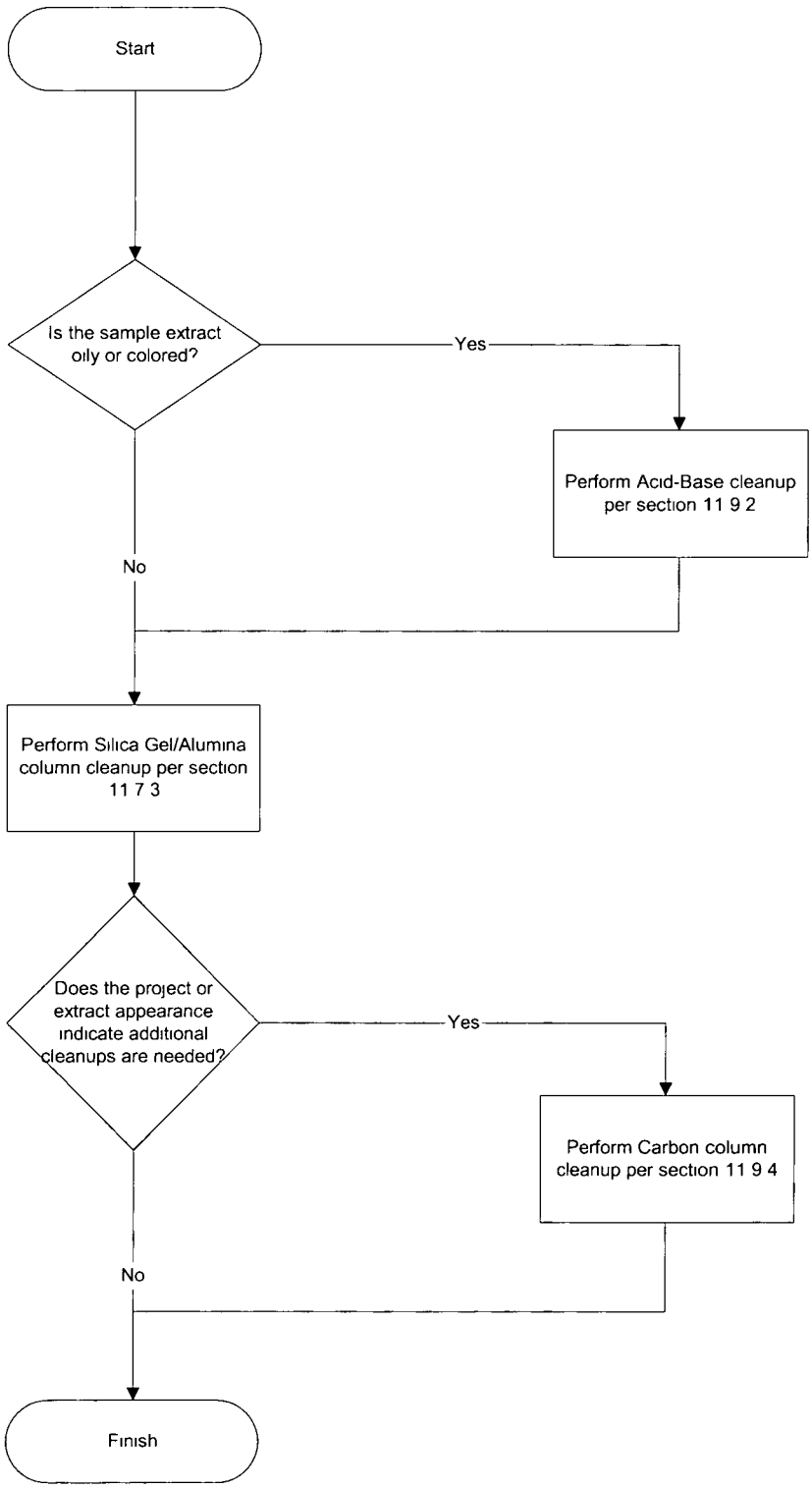

Figure 8

Analysis of PCDD's and PCDF's by HRGC/HRMS

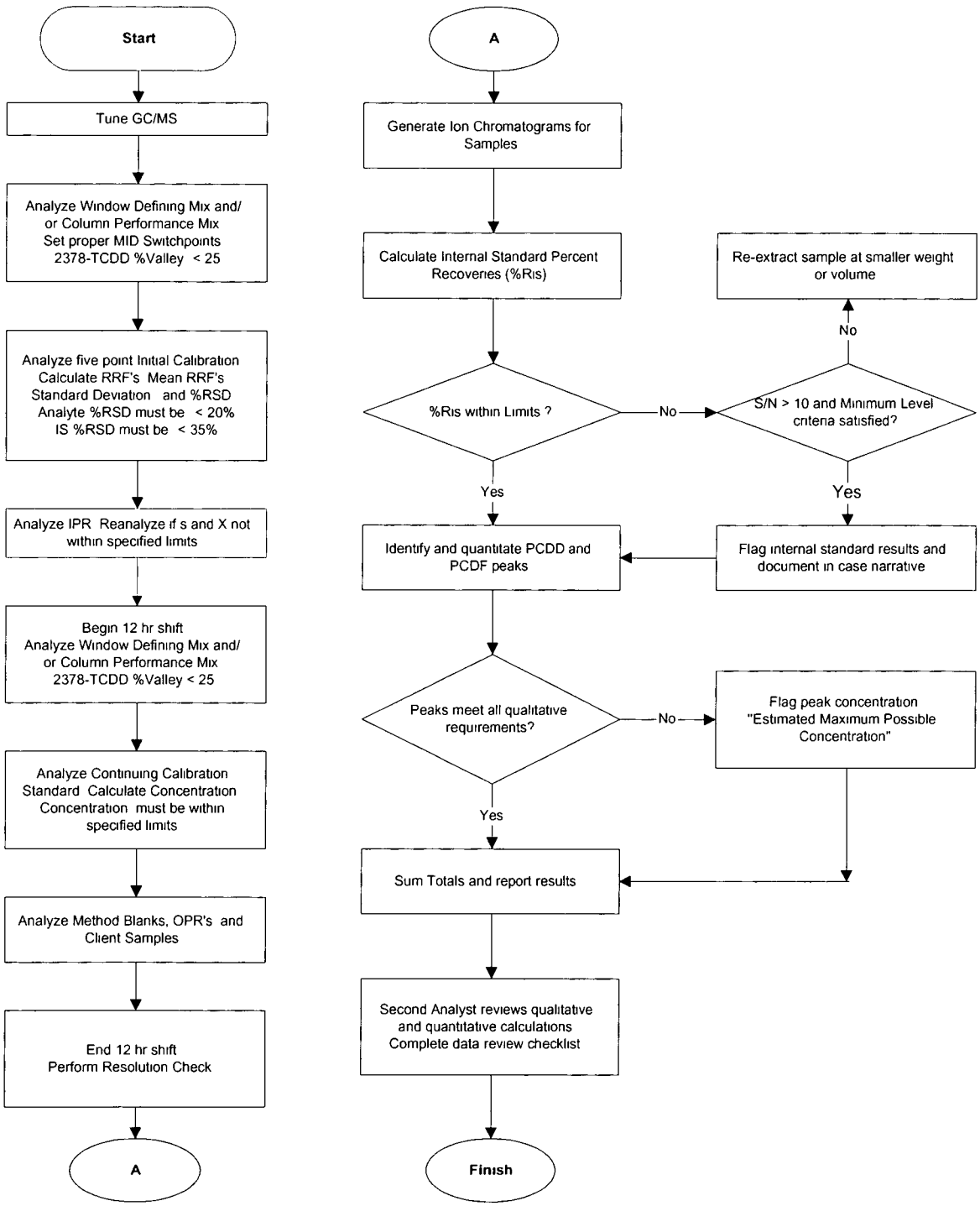

Appendix I Lipids Determination

1.0 This lipids determination procedure defaults to the extraction procedure for tissue as defined in the reference standard operating procedure KNOX-ID-0004, current revision, Section 11 with the following modifications

1.1 Weigh out 20 grams of homogenized tissue and record the sample amount on the sample prep form or in a logbook Place the 20g of homogenized tissue along with 30 grams of sodium sulfate to a laboratory blender. Blend the tissue/sodium sulfate mixture while adding small chips of dry ice to achieve a powder like consistency. Additional amounts of sodium sulfate or several more chips of dry ice may be necessary to complete the transformation of the tissue to a powder like consistency Use a balance with a sensitivity of at least 0.01 grams and with a precision of +/-0.02 grams using a 0 1 gram NIST traceable weight

1.2 Carefully add the mixture to a glass fiber thimble

1.3 Assemble the Soxhlet system and secure to the lab supports.

1.4 For tissue sample, sodium sulfate and dry ice are used for method blank, LCS/OPR and LCSD Transfer 20±0 5 grams of the sodium sulfate and several small chips of dry ice into an extraction thimble. Record the blank matrix type on the bench sheet.

1.5 Pour approximately 350 mL toluene into a 500 mL round bottom flask Place the flask in the heating mantle Add 10-15 boiling beads and several PFTE boiling chips.

1.6 Place the extraction thimble in the glass Soxhlet extractor

> **Note:** Place the method blank and QC samples in random positions within the available prep positions in the hood (i e do not use the same positions each time the method blank and QC samples are prepared)

1.7 Spike each sample with 2 0 mL of the internal standard spiking solution (see section 7 11 3) and add a small amount of glass wool if needed to the top of the extraction thimble Record the standard solution ID and volume spiked on the sample prep sheet Initial and date the entry

1.7.1 Spike the LCS/OPR, LCSD (if required), and MS/MSD (8290 only) samples with 2.0 mL of the PAR native spiking solutions (see section 7 11.2) prior to adding the glass wool Record the standard solution ID and volume spiked on the sample prep sheet Initial and date the entry.

> **Note** If the volume of standard in the stock container is less than 10 mL after use, discard the remaining portion and prepare a new batch as specified in section 7 11 2).

1.8 Adjust the temperature of the heating mantle to bring the toluene in the round bottom flask to a rolling boil There must be a steady drip from the condensers so that the solvent

completely cycles at least 5 times an hour Record the date and time that the Soxhlet extraction was started on the bench sheet, initial and date

1.9 Soxhlet extract the sample in the above manner for a minimum of 16 hours. At the end of the extraction period, turn off the heating mantles. Record the date and time that he Soxhlet extraction was completed on the bench sheet, initial and date.

1.10 Remove the condensers and empty the Soxhlet extractor chamber, then remove the Soxhlet extractor from the 500 mL round bottom flask

1.11 Add several (2-3) fresh boiling chips to the flasks Insert a three-ball macro Snyder column into the top of the 500 mL round bottom flask

1.12 Place the 500 mL flask back into the heating mantle and reduce the extract volume to approximately 20 mL

1.13 Transfer extract to a 40 mL vial marked at 20 mL

1.14 Take 10 mL of the extract for lipids determination Process the other 10 mL as necessary for method 8290

1.15 Determination of the lipids content of sample

1.15.1 Adjust the volume of rinsings to approximately 20 mL by either adding more toluene or concentrating down the rinsing

1.15.2 Weigh the aluminum foil weighing boat and record the weight (tare weight) on the lipid determination worksheet Use an analytical balance capable of weighing to 0 001 grams with a precision of +/-0 002 grams using a 0 1 gram NIST traceable weight.

1.15.3 Remove 10 mL of the extract and place in the aluminum foil weighing boat Immediately weigh the boat and extract to reduce solvent evaporation Record the weight on the lipid determination worksheet

1.15.4 Place the boat in the hood and allow the solvent to evaporate Dry the sample overnight (at least 12 hours) Weigh the boat after all the solvent has evaporated Allow the boat to air dry for one more hour and reweigh the boat. Repeat this process several times to make sure the solvent is completely removed or until constant weight is achieved ($\leq$0 020 grams difference between weighings). Record the weights on the lipids determination worksheets. Enter the data into the Gravimetric Lipids Sample Analysis worksheet found in the Knx Orgprep general templates Upload the data from the worksheet into QuantIMS

1.15.5 The percent lipids is calculated as follows

% Lipids = (Residue Weight / Tissue Weight) * 100

Where

Residue Weight (g) = Dry Weight – Tare Weight

$$\text{Tissue Weight (g)} = \frac{\text{(Weight of Sample Extracted * Volume used for Lipid (mL))}}{\text{Total Extract Volume (mL)}}$$

"Dry Weight" in this case refers to the weight of the aluminum foil boat, containing residue, after solvent evaporation

1.15.6 Record the 50% split of the extract on the extraction bench sheet

1.16 Process the other 10 mL of remaining extract as necessary for method 8290, see KNOX-ID-0004, section 11 for details

Table 1 Summary of QC Measures

Performance Area	Parameter	Frequency	Acceptance Criteria	Corrective Action
Method Blank/ Instrument Blank	Concentration of target analytes, using all reagents & glassware used for sample analysis.	Minimum of 1 for each 20 samples	≤ Reporting Limit (minimum level)	If less than 5% of sample concentrations, narrate If greater than 5% of sample concentrations, re-extract entire batch
Laboratory Duplicate	Precision Comparison of % Lipids	Analyze duplicate at a frequency of 1 per 20 client samples. (MS/MSD can be used)	RPD≤20% for %Lipids >5x RL. RPD≤+/- 2xRL for %Lipids ≤5x RL	Review calculations. Narrate

Attachment I· LRMS Dioxin Screen Strategy

LRMS Dioxin Screen Strategy

Analyte	10g LCL ppt pg/g	10g UCL ppt pg/g	5X UCL 10 g 20 uL	5X UCL @ 1 g pg/g	Level 4 Samp Conc pg/g	Level 4 Screen Using 1 g 20uL pg/g	Level 4 Screen Using 1 g 500 uL vs 20uL (pg/g)	Level 4 Screen Using 1 25 g 500 uL vs 20uL (pg/g)	Level 4 Screen Using 2 5 1000 uL vs 20uL (pg/g)
2 3 7 8-TCDD	1	400	2000	20000	100	1000	25000	20000	20000
2 3 7 8-TCDF	1	400	2000	20000	100	1000	25000	20000	20000
1 2 3 7 8-PeCDD	5	2000	10000	100000	500	5000	125000	100000	100000
1 2 3 7 8-PeCDF	5	2000	10000	100000	500	5000	125000	100000	100000
2 3 4 7 8-PeCDF	5	2000	10000	100000	500	5000	125000	100000	100000
1 2 3 4 7 8-HxCDD	5	2000	10000	100000	500	5000	125000	100000	100000
1 2 3 6 7 8-HxCDD	5	2000	10000	100000	500	5000	125000	100000	100000
1 2 3 7 8 9-HxCDD	5	2000	10000	100000	500	5000	125000	100000	100000
1 2 3 4 7 8-HxCDF	5	2000	10000	100000	500	5000	125000	100000	100000
1 2 3 6 7 8-HxCDF	5	2000	10000	100000	500	5000	125000	100000	100000
2 3 4 6 7 8-HxCDF	5	2000	10000	100000	500	5000	125000	100000	100000
1 2 3 7 8 9-HxCDF	5	2000	10000	100000	500	5000	125000	100000	100000
1 2 3 4 6 7 8-HpCDD	5	2000	10000	100000	500	5000	125000	100000	100000
1 2 3 4 6 7 8-HpCDF	5	2000	10000	100000	500	5000	125000	100000	100000
1 2 3 4 7 8 9-HpCDF	5	2000	10000	100000	500	5000	125000	100000	100000
OCDD	10	4000	20000	200000	1000	10000	250000	200000	200000
OCDF	10	4000	20000	200000	1000	10000	250000	200000	200000

If levels in screen are greater than the level 4 standard do not prep Send for 8280 analysis
If peaks are observed at 1/5 to 1 time(s) the areas of the level 4 standard, prep at 1 g, 1/10 bench dilution ***
If peaks are observed at 1/50 to 1/5 time(s) the areas of the level 4 standard prep at 1 g ***
If no peaks are observed, prep 10 grams

*** In these cases the glassware used is treated as contaminated Post- Clean with solvent before washing

Attachment II Example Of Determination of Sediment Sample Extraction Amount

TestAmerica Knoxville
Determination of Sediment Sample Extraction Amounts

Prep Batch #· _____
OR Lot ID Meth Code

	Lot #	Sample Number	Work Order ID	Percent Moisture	Percent Solids	Extraction Amount (g)	Dry Weight Amount (g)	LIMS DF (GC Use Only!)
1								
2								
3								
4								
5								
6								
7								
8								
9								
10								
11								
12								
13								
14								
15								
16								
17								
18								
19								
20								
21								
22								
23								
24								
25								

Attachment III · Example Gravimetric Lipids Data Worksheet

TestAmerica Knoxville
Gravimetric Lipids Data Worksheet

Batch # _____
Prep Date: _____
Comp Date _____

Analyst Initials _____
Analyst LIMS Code _____

Anal Date (mmddyy): _____
Instr ID B-L

Reviewed by _____
Date: _____

Lot Number	Lot Sample Number	Suffix	Method Code	QuantMS RL (%)	WO #	Total Sample Weight (g)	Total Extract Volume (mL)	Volume Extract Used (mL)	Final Sample Weight (g)	Tare Weight (Vial) (g)	Dry Weight (Vial+Extract) (g)	Residue Weight (g)	% Lipids

Spike Information

Spike	Standard ID	Spike Vol (mL)	Std Conc (mg/mL)	Work Order	Final Sample Weight (g)	True Spike Conc (% Lipids)
LCS						

Reagents
MeCl2 Lot #
Acetone Lot #

Comment _____

Final Sample Weight (g) = Total Sample Weight (g) x Volume Extract Used (mL) / Total Volume Extract (mL)
Residue Weight (g) = Dry Weight (g) - Tare Weight (g)
% Lipids = 100 x Residue Weight (g) / Final Sample Weight (g)
True Spike Concentration [% Lipids] = 100 x Standard Concentration (mg/mL) x Spike Volume (mL) / Final Sample Weight (g) x 1 g / 1000 mg

Attachment 10

PT-WC-030: Total Organic Carbon Analysis for Solid and Sediment Matrices

TestAmerica

THE LEADER IN ENVIRONMENTAL TESTING

Pittsburgh

Title: Total Organic Carbon Analysis for Solid and Sediment Matrices

Method(s): Lloyd Kahn

Approvals (Signature/Date):

10/16/09 Larry Matko Date Technical Specialist	10/12/09 Steve Jackson Date Health & Safety Manager / Coordinator
10/12/09 Nasreen DeRubeis Date Quality Assurance Manager	10/16/09 Larry Matko Date Laboratory Director

Copyright Information:
This documentation has been prepared by TestAmerica Laboratories, Inc and its affiliates ("TestAmerica"), solely for their own use and the use of their customers in evaluating their qualifications and capabilities in connection with a particular project The user of this document agrees by its acceptance to return it to TestAmerica upon request and not to reproduce, copy, lend, or otherwise disclose its contents, directly or indirectly, and not to use if for any other purpose other than that for which it was specifically provided The user also agrees that where consultants or other outside parties are involved in the evaluation process, access to these documents shall not be given to said parties unless those parties also specifically agree to these conditions

THIS DOCUMENT CONTAINS VALUABLE CONFIDENTIAL AND PROPRIETARY INFORMATION. DISCLOSURE, USE OR REPRODUCTION OF THESE MATERIALS WITHOUT THE WRITTEN AUTHORIZATION OF TESTAMERICA IS STRICTLY PROHIBITED THIS UNPUBLISHED WORK BY TESTAMERICA IS PROTECTED BY STATE AND FEDERAL LAW OF THE UNITED STATES IF PUBLICATION OF THIS WORK SHOULD OCCUR THE FOLLOWING NOTICE SHALL APPLY:

©COPYRIGHT 2008 TESTAMERICA LABORATORIES, INC. ALL RIGHTS RESERVED.

1. SCOPE AND APPLICATION

1 1 This SOP describes the laboratory procedure for the determination of total organic carbon (TOC) in soils and sediments A procedure for the determination of TOC in marine sediment high in inorganic carbon is provided in Appendix A

1 2 The routine reporting limit is 500 mg/kg

1 3 For DoD QSM 4 1 requirements, refer to SOP PT-QA-029

2. SUMMARY OF METHOD

2 1 A small aliquot of sample, routinely 20 0 mg, is transferred to a tin capsule and treated with phosphoric acid, then dried in an oven at 105°C for 30 minutes to one hour This serves to separate the organic carbon from inorganic carbonates and bicarbonates The sample is then transferred to an instrument where it is pyrolyzed in an inductive type furnace The carbon is converted to carbon dioxide and measured by a differential thermal conductivity detector

2 2 This procedure is based on the EPA Region II document "Determination of Total Organic Carbon in Sediment", July 27, 1998 that was authored by Lloyd Kahn, Quality Assurance Specialist

3. DEFINITIONS

3 1 LCS Laboratory Control Sample processed through all method steps with the sample The LCS is used to monitor the accuracy of the analytical process independent of possible interference effect due to sample matrix

3 2 LCSD Laboratory Control Sample Duplicate processed with the LCS when sufficient sample is not available to process a sample duplicate A LCSD is used to demonstrate batch precision when the client has not supplied sufficient sample to prepare a duplicate sample analysis A LCSD is required for a batch if a sample duplicate is not analyzed

3 3 MB Method Blank is prepared with the same reagent grade water that is used to dilute the sample The method blank is used to monitor laboratory contamination

3 4 MS Matrix Spike (MS) is an aliquot of one sample in the QC batch that is spiked with a known amount of the target analyte As a part of the QC batch, it accompanies the sample through all the steps of the analytical process

3 5 SD Sample Duplicate is a replicate aliquot of an environmental sample taken from the same sample container, when possible, and processed with the first aliquot of the sample The sample and sample duplicate results are compared to determine the effect of the sample matrix on the precision of the analytical process

3 6 Initial Calibration Verification (ICV) A prepared standard solution from a source separate from that of the calibration standards used to verify the concentration of the calibration standards and the adequacy of instrument calibration

3 7 Continuing Calibration Verification (CCV) a prepared standard solution used to verify the stability of the instrument calibration and instrument performance during the analysis of samples

3 8 Calibration Blank (ICB/CCB) a volume of reagent water acidified with the same acid matrix as in the calibration standards

3 9 QC Batch The QC batch is a set of 20 or fewer environmental samples plus associated laboratory QC samples that are similar in composition and that are processed within the same time period and with the same reagents and standard lots Laboratory QC samples such as LCS, matrix QC samples, method QC samples, and blanks are not included in the sample count for QC batching purposes

3 10 Reagent Grade Water Laboratory water produced by a Millipore DI system or equivalent Reagent grade water must be free of the analyte of interest

3 11 Method Detection Limit (MDL) the minimum amount of a substance that can be measured with a specified degree of confidence that the amount is greater than zero using a specific measurement system The MDL represents a range where qualitative detection occurs using a specific method Quantitative results are not produced in this range For further detail on detection limits procedure refer to SOP PT-QA-007

3 12 For DoD QSM 4 1 requirements and definitions refer to SOP PT-QA-029

4. INTERFERENCES

4 1 Volatile organics in the sediments may be lost in the decarbonation step resulting in a low bias Maintaining the sample at 4°C, analyzing the sample within the specified holding time, and analyzing the wet sample, may minimize bacterial decomposition and volatilization of the organic compounds

5. SAFETY

5 1 Employees must abide by the policies and procedures in the Corporate Environmental Health and Safety Manual (CW-E-M-001) and this document This procedure may involve hazardous material, operations and equipment This SOP does not purport to address all of the safety problems associated with its use It is the responsibility of the user of the method to follow appropriate safety, waste disposal and health practices under the assumption that all samples and reagents are potentially hazardous Safety glasses, gloves, lab coats and closed-toe, nonabsorbent shoes are a minimum

5 2 Specific Safety Concerns or Requirements

5 2 1 Not applicable

5 3 Primary Materials Used

5 3 1 The following is a list of the materials used in this method, which have a serious or significant hazard rating NOTE This list does not include all materials used in the method The table contains a summary of the primary hazards listed in the MSDS for each of the materials listed in the table A complete list of materials used in the method can be found in the reagents and materials section Employees must review the information in the MSDS for each material before using it for the first time or when there are major changes to the MSDS

Material (1)	Hazards	Limit (2)	Signs and symptoms of exposure
Phosphoric Acid	Corrosive	1 Mg/M3 TWA	Inhalation is not an expected hazard unless misted or heated to high temperatures May cause redness, pain, and severe skin burns May cause redness, pain, blurred vision, eye burns, and permanent eye damage
1 – Always add acid to water to prevent violent reactions			

5 4 Eye protection that protects against splash, laboratory coat, and appropriate gloves must be worn while samples, standards, solvents, and reagents are being handled Cut resistant

gloves must be worn doing any other task that presents a strong possibility of getting cut Disposable gloves that have become contaminated will be removed and discarded, other gloves will be cleaned immediately

5 5 Exposure to chemicals must be maintained **as low as reasonably achievable**, therefore, unless they are known to be non-hazardous, all samples must be opened, transferred, and prepared in a fume hood or under other means of mechanical ventilation Solvent and waste containers will be kept closed unless transfers are being made

5 6 The preparation of standards and reagents will be conducted in a fume hood with the sash closed as far as the operations will permit

5 7 All work must be stopped in the event of a known or potential compromise to the health and safety of a TestAmerica associate The situation must be reported **immediately** to a laboratory supervisor and/or the EHSC

6. EQUIPMENT AND SUPPLIES

6 1 Instrumentation

6 1 1 Thermo Flash EA 1112 Series

6 2 Supplies

6 2 1 105°C Oven

6 2 2 Analytical Balance Capable of weighing to 0 0001g

6 2 3 Aluminum Trays that hold sample capsules for use at 105°C

6 2 4 Tweezers

6 2 5 10mm X 12mm tin capsules

6 2 6 Quartz columns

6 2 7 Quartz wool, for segregating and containing column materials

6 2 8 Copper wire, reduced, Thermo

6 2 9 High Temperature Gloves

6 2 10 Graduated Cylinders and/or Volumetric Flasks Various sizes, Class A

6 2 11 Volumetric Pipettes Various sizes, Class A

7. REAGENTS AND STANDARDS

7 1 Reagent water

7 2 Phosphoric Acid, concentrated, reagent grade, J T Baker recommended

7 3 Phosphoric Acid Solution (1 19) Add approximately 100 mL of reagent water to a 200 mL volumetric flask Add 18 34 g of concentrated phosphoric acid to the volumetric flask then adjust to volume with reagent water Mix the solution well then transfer the solution to a 250 mL polyethylene bottle Assign an expiration date of six months from date made and store the solution at room temperature

7 4 Potassium Hydrogen Phthalate Used to check instrument calibration

7 4 1 Add approximately 50 mL of reagent water to a 100 mL volumetric flask Add 2 128 grams of KHP (potassium hydrogen phthalate) to the volumetric flask then adjust the volume with reagent water, thus making a 1% KHP solution Mix the solution well and assign an expiration date of six months from the date prepared and store the solution at room temperature

7 4 2 Add 5 0 mL of the 1% KHP solution from section 7 4 1 to a 50 ml volumetric flask and bring to volume with reagent water, thus making a 0 1% KHP solution Mix the solution well and assign an expiration date of six months from the date prepared and stored at room temperature

7 4 3 Add 0 5 mL of the 1% KHP solution from section 7 4 1 to a 50 ml volumetric flask and bring to volume with reagent water, thus making a 0 01% KHP solution Mix the solution well and assign an expiration date of six months from the date prepared and stored at room temperature

7 5 LCS Material, Soil reference material

7 6 Note all standards materials should be measured in volumetric glassware and calibrated pipettes

8. SAMPLE COLLECTION, PRESERVATION, SHIPMENT AND STORAGE

8 1 Samples should be collected in amber glass jars Immediately following collection, the samples should be cooled to ≤ 6 °C (0-6 °C) and maintained at that temperature until time of analysis

8 2 The holding time is 14 days from date of collection

8 3 Unless otherwise specified by a federal, state or client-specific protocol, samples are disposed of after 30 days in a manner that complies with all applicable regulations

9. QUALITY CONTROL

9 1 Sample QC

9 1 1 The following QC check samples are analyzed with each batch of 20 or less samples Method Blank (MB) Laboratory Control Sample (LCS), Matrix Spike/Matrix Spike Duplicate (MS/MSD) and a Sample Duplicate (DP) In addition to calibration (ICAL), instrument standardization is checked with KHP every 20 drops and at the end of the analytical sequence The minimum frequency requirements, acceptance criteria and recommended corrective action for QC samples are summarized in Table 1

9 1 2 The laboratory control sample (LCS) is analyzed prior to the analysis of environmental samples and after every 20 or fewer environmental samples The LCS recovery must be ±25 percent of the true value If the LCS fails criteria, the analyst will check calculations and instrument performance and reanalyze the LCS once If the LCS is still outside control limits, all samples in the QC batch will be reprepared and reanalyzed If this is not possible due to limited sample quantity, the laboratory project manager will be notified and an analytical narrative provided with the data If repreparation and reanalysis will be outside of holding time, the client should be notified and approval from the client must be obtained before reanalysis

9 1 2 1 A laboratory control sample duplicate or LCSD is used to demonstrate batch precision when the client has not supplied sufficient sample to prepare a duplicate sample analysis In this case the LCSD must be recovered within ±25 percent of the known value and an acceptable RPD of ≤20 percent with the LCS

9 1 2 2 For programs that require a QC reference sample for every ten samples, an LCS will be analyzed prior to the analysis of environmental samples and after every 10 or fewer environmental samples

9 1 3 The Method Blank (MB) is processed with each batch of 20 or fewer environmental samples to assure the cleanliness of the reagents and apparatus The blank must be less than the reporting limit or all samples associated with the unacceptable blank will be reanalyzed If this is not possible due to limited sample quantity, the laboratory project manager will be notified and an analytical narrative provided with the data If repreparation and reanalysis is outside of the holding time the client should be notified and approval from the client must be obtained before reanalysis For DoD QSM 4 1, no analyte detected > 1/2 the reporting limit and > 1/10 the amount measured in any sample or 1/10 the regulatory limit (whichever is greater) Refer to SOP PT-QA-029 for DoD QSM 4 1 requirements

9 1 4 A Sample Duplicate (SD) is analyzed with every set of twenty or fewer samples Acceptance criteria is calculated as relative percent difference (RPD) between the original and duplicate sample analysis and the acceptable range is ≤20 percent If the RPD is outside of criteria, the analyst will check calculations and instrument performance, reanalyze the samples once, evaluate results, and, if necessary, narrate it when reporting the data The duplicate samples are not counted as part of the 20 or fewer environmental samples in the QC batch

9 1 5 A Matrix Spike (MS) is processed with every 20 environmental samples The MS recoveries should be within ± 25 percent of the true value If the MS fails recovery criteria, the analyst will check calculations and instrument performance, in order to evaluate evidence of matrix interference If the LCS is acceptable and the MS is outside of QC limits, then a matrix effect is indicated and narrated accordingly If the sample selected for spiking requires dilution because the initial concentration of the sample is excessively high, then the MS should be run at the same dilution as the unspiked sample If the resulting spike is over range, this should be documented and narrated in the data report The MS should never be run at a dilution greater than the associated sample as this alters the matrix of the sample and thereby makes it invalid

9 2 Instrument QC

9 2 1 After initial calibration is completed, the calibration is verified by analyzing the ICV which is from a second source The ICV concentration is 34000 mg/kg The ICV must be ± 15% If the ICV fails, correct any problems and rerun the ICV If that fails, correct any problems and repeat the initial calibration

9 2 2 Analyze ICB before the ICV Results must be less than reporting limit For DoD no analytes detected > LOD (MDLV) For DoD QSM 4 1 requirements refer to SOP PT-QA-029

9 2 3 The CCB and CCV are analyzed every 20 drops and the end of the analytical sequence The CCV must be within ± 15 percent If this criterion is not met, correct the problem, then reanalyze the samples with a valid CCV If it fails again, the recalibrate and reanalyze the affected samples The CCB must be analyzed before the CCV and results must be below the reporting limit If this criterion is not met, then recalibrate and reanalyze the samples For DoD no analytes detected > LOD (MDLV) For DoD QSM 4 1 requirements refer to SOP PT-QA-029

9.3 For DoD QSM 4 1 requirements refer to SOP PT-QA-029

10. PROCEDURE

10 1 Sample Preparation

10 1 1 Using tweezers, and working directly from the box, place a tin capsule on the tared analytical balance Using the small sample scoop, add approximately 20 mg (or more, if client requested) of sample to the capsule Remove the capsule from the balance and place into one of the aluminum holding trays Weigh two separate aliquots into two separate tin capsules for each field sample Record all weight measurements on the sample preparation log For the method blank, set two empty tin capsules into an aluminum tray For the LCS, weigh ~10 mg of LCS material into two separate tin capsules and set them in sequence in an aluminum tray For ICV use the same standard as the LCS and weigh 10 mg

10 1 2 Add 1-2 drops of 1 19 phosphoric acid to each tin capsule Place the aluminum trays into a drying oven set to a temperature of 105 °C for 30-60 minutes or until all samples appear dry

10 1 3 Using tweezers, pinch the top of each tin capsule closed and compress the capsule around the material inside Work carefully so as not to tear the capsule, but crush it down to the smallest size Set the prepared samples directly into an autosampler tray for analysis For the latter, leave positions open for the KHP check standards and associated blanks

10 1 4 Prepare the KHP standard and blanks as follows

10 1 4 1 For each KHP CCV, spike 100 uL of the stock standard into a tin capsule Place in 105 °C oven for 30-60 minutes Fold the capsule up and compress down to the smallest size possible Prepare enough KHP to ensure a frequency of every 20 drops and the end of the analytical sequence For each associated blank, place empty tin capsule in 105 °C oven for 30-60 minutes Fold the capsule up and compress down to the smallest size possible

10 2 Calibration

10 2 1 Calibration Curve Analyze a calibration curve each time the combustion column is changed (a combustion column is good for about 200 sample drops) The recommended formulations for each calibration level is provided in the following table

Table –1

Calibration Standard KHP	Standard Used	Weight (mg)	% Carbon	Final Volume (mL)
KHP Stock		-	47 05	-
Stock Standard	KHP Stock	2128	1	100
Primary Standard	Stock Standard	5000	0 1	50
Secondary Standard	Stock Standard	5000	0 01	50

Table - 2

Calibration Curve Levels

		Volume Injected (uL)	% Carbon
Calibration Level 1	Secondary Standard	200	0 01
Calibration Level 2	Primary Standard	50	0 1
Calibration Level 3	Primary Standard	100	0 1
Calibration Level 4	Primary Standard	200	0 1
Calibration Level 5	Stock Standard	50	1 0
Calibration Level 6	Stock Standard	100	1 0
Calibration Level 7	Stock Standard	200	1 0

Measure a single drop for each calibration point The instrument software system plots peak area against mg of Carbon and calculates a correlation coefficient using standard linear regression The correlation coefficient (r) must be $\geq$ 0 995 for the calibration to be considered acceptable If it is not, repeat the calibration prior to further analysis

10 3 Sample Analysis

10 3 1 Software Set-up and Analysis

10 3 1 1 If the column has been changed, generate a new calibration curve If not, use the existing calibration curve for analysis Verify the calibration curve by analyzing the CCV along with CCB CCB and CCV must pass requirements as outlined in section 9 2 before sample analysis Each column will analyze approximately 200 individual sample drops After changing the column, generate a new calibration curve

10 3 1 2 At the main screen, select Edit then choose sample table Go to edit sample table then fill sample table Change sample table name and file name Select unknown In the number of samples field, place the number of runs for analysis

10 3 1 3 Enter each sample ID and their respective weights Press ok From main menu, select File then save method Type in date, then press save

10 3 1 4 An example analytical sequence follows

Initial Calibration (calibration blank and 7 calibration standards)

ICB	(1 drop)
KHP (ICV)	(1 drop)
PBS	(2 individual drops)
LCS	(2 individual drops)
Sample	(2 individual drops)
Sample	(2 individual drops)
Sample	(2 individual drops)
Sample	(2 individual drops)
Sample	(2 individual drop)
KHP (CCV)	(1 drop)
Blank (CCB)	(1 drop)

10 3 1 5 Add the samples, CCVs and blanks to the autosampler tray and set the tray into the autosampler carriage Turn the autosampler tray until the number 1 position is behind the

post, in front of the autosampler The tray is now set to run If needed analyze an instrument blank after each sample due of high TOC concentrations

10 3 1 6 Press run, start sequence of samples Click on force to standby Click start now

10 3 2 If any sample result exceeds the calibration range, that sample will be re-prepared using less sample weight and reanalyzed

10 4 All sample preparation and analysis information will be documented on laboratory bench sheets, computer printouts, standard logbooks, etc All the documents associated with an analysis will be forwarded for reporting and for inclusion in the project files

10 5 Analyst must follow manual integration requirements as stated in SOP CA-Q-S-002, Acceptable Manual Integration Practices

10 6 Instrument maintenance as needed seal replacement, changing the drying agent and empty the crucible

11. CALCULATIONS / DATA REDUCTION

11 1 Percent Carbon to mg/kg Carbon Conversion

% Carbon × 10,000 = mg/kg Carbon

11 2 Percent Recovery (%R) Calculation

$$\%R = \frac{\text{observed value}}{\text{true value}} \times 100$$

11 3 MS Percent Recovery

$$\text{MS \% Recovery} = \left(\frac{\text{Observed Conc of MS} - \text{Conc of Smp}}{\text{True Spike Conc}} \right) \times 100\ \%$$

11 3 1 When sample concentration is less than the instrument detection limit, use 0 for sample results only for purposes of calculating percent recovery

11 3 2 The units for reporting spike sample results will be identical to those used for reporting sample results (µg/L for aqueous and mg/Kg dry weight basis for solid)

11 4 Duplicate Sample Relative Percent Difference calculation

$$RPD = \frac{|X_1 - X_2|}{\left(\frac{X_1 + X_2}{2}\right)} \times 100\ \%$$

Where

X1 = Original Result
X2 = Duplicate Result

2. METHOD PERFORMANCE

12 1 Method Detection Limit Study (MDL)

12 2 An Initial Method Detection Limit (MDL) determination is performed following the procedure described in this procedure according to 40CFR, Part 136, Appendix B and laboratory SOP PT-QA-007 The MDL is determined as per SOP PT-QA-007 The MDL is repeated when a significant change to the method occurs Significant changes include the use of alternate reagents or standard reference materials, new instrumentation or the use of alternate sample preparation procedures For DoD requirements refer to SOP PT-QA-029

12 3 Demonstration of Capabilities

12 3 1 An Initial Demonstration of Capability is required for each analyst before unsupervised performance of this method This is demonstrated using four LCSs The LCS must meet QC criteria in this SOP

12 4 Training Requirements

12 4 1 The group/team leader has the responsibility to ensure that this procedure is performed by an analyst who has been properly trained in its use and has the required experience The group/team leader must document the training and PE performance and submit the results to the QA Manager for inclusion in associate training files

12 5 Control Charts are to be generated using in house data

13. POLLUTION CONTROL

13 1 It is TestAmerica's policy to evaluate each method and look for opportunities to minimize waste generated (i e , examine recycling options, ordering chemicals based on quantity needed, preparation of reagents based on anticipated usage and reagent stability) Employees must abide by the policies in Section 13 of the Corporate Environmental Health and Safety Manual (CW-E-M-001) for "Waste Management and Pollution Prevention "

14. WASTE MANAGEMENT

14 1 Waste management practices are conducted consistent with all applicable rules and regulations Excess reagents, samples and method process wastes are disposed of in an accepted manner Waste description rules and land disposal restrictions are followed Waste disposal procedures are incorporated by reference to SOP PT-HS-001 The following waste streams are produced when this method is carried out

14 1 1 Spent combustion columns This waste is placed in waste containers identified as Lab Trash, Waste #12

15. REFERENCES

15 1 Determination of Total Organic Carbon in Sediment, July 27, 1988 Lloyd Kahn, Quality Assurance Specialist, U S Environmental Protection Agency, Region II

15 2 SOP CA-Q-S-002, Acceptable Manual Integration Practices, current version

15 3 Pittsburgh Laboratory Quality Assurance Manual, PT-LQAM, current version

15 4 PT-QA-001, Employee Orientation and Training

15 5 PT-QA-006, Procurement of Standards and Materials, Labeling and Traceability

15 6 PT-QA-007, Detection Limits

15 7 PT-QA-009, Rounding and Significant Figures

15 8 PT-QA-016, Nonconformance & Corrective Action System

15 9 PT-QA-018, Technical Data Review Requirements

15 10 PT-QA-021, Quality Assurance Program

15.11 PT-QA-022, Equipment Maintenance

15 12 PT-QA-024, Subsampling

15 13 PT-QA-027, Sample Receiving and Chain of Custody

15 14 PT-QA-029, QA/QC Requirements for DoD QSM Version 4 1

16. METHOD MODIFICATIONS

16 1 Not applicable

17. ATTACHMENTS

17 1 Table 3 QC Summary

17 2 Appendix A TOC Procedure for High Concentration Marine Sediments

18. REVISION HISTORY

18 1 Revision 1, 09/30/08

18 1 1 Changed laboratory name to TestAmerica

18 1 2 Renamed the SOP as PT-WC-030

18 1 3 Changed SOP format to match corporate SOP format

18 1 4 Added text stating that if any sample result exceeds the calibration range, that sample will be re-prepared using less sample weight and reanalyzed

18 1 5 Tables numbered as Table 1, 2 and 3 Table 1 and 2 clarified

18 1 6 Reference added for Pittsburgh Quality Assurance Manual, MDL SOP and Manual Integration SOP

18 1 7 All changes throughout this document have been highlighted

18 2 Revision 2, 11/28/08

18 2 1 Added sections 7 4 1-7 4 3

18 2 2 Added to section 9 2 1 CCV is analyzed every 20 drops and the end of the analytical sequence

18 2 3 Added to Table 3, KHP (CCV)

18 3 Revision 3

18 3 1 Section 2 1 changed sample amount to 20 mg

18 3 2 Added reference to DoD SOP PT-QA-029

18 3 3 Updates sample storage requirements to ≤ 6 °C in section 8 1

18 3 4 Updated sections 9 2 1-9 2 3 regarding ICV/ICB and CCV/CCB requirements

18 3 5 Section 10 1 1 changed sample amount to 20 mg and LCS/ICV amount to 10 mg

18 3 6 Updated section 10 3 1 4, analysis sequence

18 3 7 Added to section 10 3 1 5, Analyze a instrument blank after each sample due of high samples concentrations

18 3 8 Added SOP references to sections 15 5-15 15

18 3 9 Revised Table 3

Table 3 - QC Summary and Recommended Corrective Action

QC Sample	Frequency	Acceptance Criteria	Corrective Action
ICAL	Following each column change or as needed	r ≥ 0 995	Check standards, check instrument, re-calibrate
ICB/CCB	ICB following initial calibration before ICV CCB every 20 drops before (KHP) CCV	< RL For DoD refer to SOP PT-QA-029	Rerun, still failed, recalibrate and reanalyze affected samples
ICV (second source)	Following initial calibration after ICB	± 15%	Rerun, still failed, recalibrate and reanalyze
Method Blank (PBS)	Once per batch of 20 samples	< RL For DoD refer to SOP PT-QA-029	Re-prepare and reanalyze batch
LCS	Once per batch of 20 samples	%R (75-125)	Re-prepare and reanalyze batch
KHP (CCV) (same source as initial calibration standards)	Every 20 drops and at the end of the analytical run	%R (85-115)	Re-prepare and reanalyze samples not surrounded by passing (KHP's) CCVs
Matrix Spike	One per batch of 20 or less samples	%R (75-125)	Discuss outlier in project narrative
Sample duplicate	One per batch of 20 or less samples	RPD ≤20%	Discuss outlier in project narrative

Appendix A: Marine Sediments High in Inorganic Carbon

Sample Preparation

Transfer approximately 10 g of a thoroughly mixed sample to an aluminum weigh dish, and dry in the 105°C oven Grind the sample with the mortar and pestle to a fine powder Record the weight of a 250 mL Teflon beaker then transfer ~ 5 g of the ground sample to this beaker

If the sample is to be spiked, weigh the beaker to the nearest 0 1mg and record the weight Likewise determine and record the weight of the added sample Add 0 1g of NIST 1632b Trace Elements in Coal (80 11% Carbon) to the sample Record the weight added Evenly distribute the spike over the sample and use a glass stir rod to mix the spike with the sample Do not use that stir rod with any other sample

Use Talc-free latex gloves s from this point on to minimize the risk of acid burns Add several drops of 1 1 HCl to each sample and stir each sample with its own glass stir rod Samples with high concentrations of inorganic carbon may effervesce to the point of overflowing the beaker, so take care to add the acid in small aliquots and stir vigorously If the sample "boils over" it must be re-prepared Continue to add 1 1 HCl in small aliquots until there is no further reaction, taking sample to dryness after each addition of acid with the hot plate provided

Carefully rinse the stir rod and beaker walls with deionized water using a fine-tipped squirt bottle Use only what is needed to bring the entire sample to the bottom of the beaker ***When adding water to acid use necessary precautions to avoid splashing!***

Dry the treated samples on the hot plate in the hood, after each acid/water addition Do not add more than 200 mL of 1 1 HCl total to any sample

NOTE *Samples are hydroscopic and will absorb water if they are exposed to air for too long*

Weigh beaker with residue and record the residue weight measurement After the sample is thoroughly dry, scrape the sample residue from the beaker and grind to a powder using the mortar and pestle Transfer the ground sample to a clean, dry 40-mL vial reserved for this analysis

NOTE: *Depending on the nature of the sample, it may be difficult to completely remove the dried residue from the beaker or to grind it to a homogenous powder Where difficulties are encountered, make a note on the preparation worksheet*

Analysis

Perform TOC analysis on processed sample material as outlined in Section 10 3 of this SOP

Attachment 11

KNOX-OP-0020: Gravimetric Percent Lipids Determination

TESTAMERICA KNOXVILLE

STANDARD OPERATING PROCEDURE

TITLE: GRAVIMETRIC PERCENT LIPIDS DETERMINATION

(SUPERSEDES: 0)

Prepared By: Marcia J. Ramsey 5/20/09

Reviewed By: Robyn M. Wagner 5/20/09
Technical Specialist

Approved By: 05/20/09
Quality Assurance Manager

Approved By: 5-20-09
Environmental, Health and Safety Coordinator

Approved By: 5-20-09
Laboratory Director

Proprietary Information Statement:
This documentation has been prepared by TestAmerica Laboratories solely for TestAmerica's own use and the use of TestAmerica's customers in evaluating its qualifications and capabilities in connection with a particular project. The user of this document agrees by its acceptance to return it to TestAmerica Laboratories upon request and not to reproduce, copy, lend, or otherwise disclose its contents, directly or indirectly, and not to use it for any other purpose other than that for which it was specifically provided The user also agrees that where consultants or other outside parties are involved in the evaluation process, access to these documents shall not be given to said parties unless those parties also specifically agree to these conditions
THIS DOCUMENT CONTAINS VALUABLE CONFIDENTIAL AND PROPRIETARY INFORMATION DISCLOSURE, USE OR REPRODUCTION OF THESE MATERIALS WITHOUT THE WRITTEN AUTHORIZATION OF TESTAMERICA LABORATORIES IS STRICTLY PROHIBITED. THIS UNPUBLISHED WORK BY TESTAMERICA LABORATORIES IS PROTECTED BY STATE AND FEDERAL LAW OF THE UNITED STATES. IF PUBLICATION OF THIS WORK SHOULD OCCUR THE FOLLOWING NOTICE SHALL APPLY.
©COPYRIGHT 2009 TESTAMERICA LABORATORIES, INC. ALL RIGHTS RESERVED

1. SCOPE AND APPLICATION

1 1 This procedure is applicable to the determination of percent lipids in tissue samples The method is based on the SW846 Method 8290 procedure for lipid determination

1 2. The reporting limit for samples analyzed by this method is 1% lipids

2. SUMMARY OF METHOD

2 1 Tissue samples are extracted in accordance with the procedures described in the current revisions of SOPs KNOX-OP-0011, KNOX-OP-0014 and KNOX-ID-0013

2.2 After Soxhlet extraction and prior to any cleanup steps, tissue sample extracts are concentrated to 10 mL 1 mL of the 10 mL extract is removed for gravimetric lipids determination

2 3. The 1 mL extract is air dried overnight and the % lipids content of the sample is determined by calculating the residue weight / sample weight Refer to Section 12 for detailed calculations

3. DEFINITIONS

3.1 Definitions can be found in the TestAmerica Knoxville Laboratory Quality Assurance Manual (QAM) glossary

4. INTERFERENCES

4 1. Dust or foreign material may cause positive bias to the results Proper housekeeping and cleanliness are necessary to control this interference.

5. SAFETY

5.1 Employees must abide by the policies and procedures in the TestAmerica Environmental Health and Safety Manual and this document

5 2 Primary Material Used The following is a list of the materials used in this method which have a serious or significant hazard rating. **NOTE: This list does not include all materials used in the method. The table contains a summary of the primary hazards listed in the MSDS for each of the materials listed in the table.** A complete list of materials used in the method can be found in the reagents and materials section Employees must review the information in the MSDS for each material before using it for the first time or when there are major changes to the MSDS

Material	Hazards	Exposure Limit [1]	Signs and Symptoms of Exposure
Methylene Chloride	Carcinogen Irritant	25 ppm-TWA 125 ppm-STEL	Causes irritation to respiratory tract Has a strong narcotic effect with symptoms of mental confusion, light-headedness, fatigue, nausea, vomiting and headache Causes irritation, redness and pain to the skin and eyes Prolonged contact can cause burns Liquid degreases the skin May be absorbed through skin
Acetone	Flammable	1000 ppm-TWA	Inhalation of vapors irritates the respiratory tract May cause coughing, dizziness, dullness, and headache
Hexane	Flammable Irritant	500 ppm-TWA	Inhalation of vapors irritates the respiratory tract Overexposure may cause lightheadedness, nausea, headache, and blurred vision Vapors may cause irritation to the skin and eyes
1 – Exposure limit refers to the OSHA regulatory exposure limit			

5 3. Exposure to chemicals must be maintained as low as reasonably achievable, therefore, unless they are known to be non-hazardous, all samples must be opened, transferred and prepared in a fume hood, or under other means of mechanical ventilation Solvent and waste containers will be kept closed unless transfers are being made

5.4 The preparation of standards and reagents will be conducted in a fume hood with the sash closed as far as the operation will permit

5 5. All work must be stopped in the event of a known or potential compromise to the health and safety of an associate. The situation must be reported **immediately** to a laboratory supervisor

6. EQUIPMENT AND SUPPLIES

6 1 Vials· Glass, 40 mL capacity with Teflon®-lined screw-cap

6 2. Syringes, 1 mL and 100 µL

6 3. Analytical balance, 5 place, capable of measuring to 0.5 mg..

7. REAGENTS AND STANDARDS

7 1 Methylene chloride, acetone, hexane pesticide quality or equivalent.

7 2. Soybean oil standard solution, 200 mg/mL Using a syringe, add approximately 2 mL soybean oil (Full Circle Organic Soybean Oil, Topco Associates, LLC) to a tared 10 mL volumetric flask Record the weight (It should be approximately 2 g) Add acetone to the 10 mL mark and mix well

8. SAMPLE COLLECTION, PRESERVATION AND STORAGE

8 1 Sampling is not performed for this method by TestAmerica Knoxville For information regarding sample shipping, refer to SOP KNOX-SC-0003, "Receipt and Log In of Commercial Samples", current revision

8 2. Tissue samples should be kept frozen at -10 to -20 degrees C The recommended holding time is 1 year from sample collection

9. QUALITY CONTROL

9 1 Appendix I provides a summary of quality control requirements including type, frequency, acceptance criteria and corrective action

9.2. Method Blank - One method blank must be processed with each preparation batch, the batch must be prepared by the same analyst The method blank consists of 1 0 mL of the 10 mL extract of the method blank prepared with the tissue sample extraction batch It is carried through the entire analytical procedure. The method blank is used to identify any system and process interferences or contamination of the analytical system that may lead to the reporting of elevated analyte concentrations or false positive data.

9.2 1 The method blank results are acceptable if the concentration of the blank is less than the reporting limit

9 2.2 If the concentration in the method blank is equal to or above the reporting limit, the results may be reported if the lowest percent lipids in the associated samples is > 10x the blank

9 2 3 If the above criteria are not met and reanalysis is not possible due to insufficient sample, then the sample data must be qualified This anomaly must be addressed in the project narrative and the client must be notified

9.3. Laboratory Control Sample (LCS) - One LCS is processed with each lipids batch after sample extraction. The LCS consists of 1.0 mL of extraction solvent spiked with 100 µL of the 200 mg/mL soybean oil spike solution The LCS is used to monitor the accuracy of the analytical process On-going monitoring of the LCS results provides evidence that the laboratory is performing the method within acceptable accuracy and precision guidelines. If the result is outside established control limits, the system is out of control and corrective action occurs.

10. CALIBRATION AND STANDARDIZATION

10.1. The analytical balance is calibrated as described in SOP KNOX-QA-0005, current revision.

11. PROCEDURE

11.1. Extract the tissue samples in accordance with the procedures described in the current revisions of SOPs KNOX-OP-0011, KNOX-OP-0014 and KNOX-ID-0013

11 2 Batch the samples using Mass Batching.

11 3. Open the batch in QuantIMS Enter the Soxhlet extraction start and stop dates and times as the prep start and prep completion dates and times Add a blank and LCS to the batch

11 4 Enter the sample initial weight and final volume into QuantIMS before loading the batch into the Gravimetric Lipids Sample Analysis worksheet Note The total volume of sample extract prior to removing the aliquot for lipids (typically 10 mL) should be entered into QuantIMS as the final sample volume.

11 5 Open the percent lipids calculation software in Excel (Gravimetric Lipids Sample Analysis xlt, current revision) Enter the batch number and the software will pull in the sample ID information and the sample weight Print the Gravimetric Lipids Data Worksheet and use it to record the total extract volume (typically 10 mL), volume of extract used (typically 1 mL), tare weight of the vial (g) and dry weight of the vial + extract (g) for each sample

11.6 After Soxhlet extraction of the tissue sample and prior to any cleanup procedures, concentrate the sample extract to 10 mL

11 7. Label a 40 mL vial with the workorder number for each tissue sample Determine and record the vial tare weight to the nearest 0 0001 g using a 5 place analytical balance.

11.8 Transfer 1 0 mL of the 10 mL extract to the appropriate tared 40 mL vial using a 1 mL syringe.

11 9. Prepare a method blank by transferring 1 0 mL of the 10 mL method blank extract to the appropriate tared 40 mL vial using a 1 mL syringe

11 10 Prepare a LCS by adding 1 0 mL of extraction solvent to a tared 40 mL vial and spiking with 100 µL of a 200 mg/mL soybean oil spike solution. Record the spike ID, the lot numbers of the reagents used for the LCS and any comments on the Gravimetric Lipids Data Worksheet.

11 11. Allow the extract to dry overnight in a fume hood

11 12 Determine and record the weight of the vial plus the dried extract to the nearest 0.0001 g

11.13. One time procedural variations are allowed only if deemed necessary in the professional judgment of supervision to accommodate variation in sample matrix, radioactivity, chemistry, sample size, or other parameters Any variation in

procedure, except those specified by project specific instructions, shall be completely documented using a Nonconformance Memo and approved by a Technical Specialist, Project Manager and QA Manager If contractually required, the client shall be notified

11 14 Any unauthorized deviations from this procedure must also be documented as a nonconformance, with a cause and corrective action described

12. DATA ANALYSIS AND CALCULATIONS

12 1 Transcribe the vial tare weight and final dry weight (dry weight of the vial + extract) to the Excel worksheet Use the worksheet to calculate % lipids and to upload the data to QuantIMS. Refer to Appendix III for detailed instructions

12.2. Refer to Appendix IV for an example data review checklists used to perform and document the review of the data Using the data review checklist, the analyst also creates a narrative which includes any qualifications of the sample data

12 3. Compile the raw data as described in Appendix V

12 4 LCS true spike concentration (% Lipids) is calculated according to the equation

$$\text{Spike Conc (\% Lipids)} = \text{Std Conc (mg/mL)} \times \frac{\text{Spike Volume (mL)}}{\text{Final Sample Weight (g)}} \times \frac{1\text{g}}{1000\text{mg}} \times 100$$

12.5. LCS percent recovery is calculated according to the equation

$$\%R = 100 x \left(\frac{Found\,Value}{True\,Value} \right)$$

12.6 The following calculations are used to determine the % Lipids content of the sample

$$\text{Final Sample Weight (g)} = \text{Total Sample Weight (g)} \times \frac{\text{Volume Extract Used (mL)}}{\text{Total Volume Extract (mL)}}$$

$$\text{Residue Weight (g)} = \text{Dry Weight of Vial plus Extract (g)} - \text{Vial Tare Weight (g)}$$

$$\text{\% Lipids} = \frac{\text{Residue Weight (g)}}{\text{Final Sample Weight (g)}} \times 100$$

12 7 Sample results are reported with two significant figures

13. METHOD PERFORMANCE

13.1 Training Qualification The group/team leader has the responsibility to ensure that this procedure is performed by an associate who has been properly trained in its use and has the required experience.

14. POLLUTION PREVENTION

14.1. None

15 WASTE MANAGEMENT

15.1. All waste will be disposed of in accordance with Federal, State and Local regulations Where reasonably feasible, technological changes have been implemented to minimize the potential for pollution of the environment. Employees will abide by this method and the policies in section 13 of the TestAmerica Environmental Health and Safety Manual for "Waste Management and Pollution Prevention "

15.2. The following waste streams are produced when this method is carried out.

- Extracted tissue sample residue shall be placed in the incinerable laboratory waste stream, contained in a steel or poly SAC container type

16. REFERENCES

16.1. SW-846 Method 8290A, "Polychlorinated Dibenzo-*p*-Dioxins (PCDDs) and Polychlorinated Dibenzofurans (PCDFs) by High Resolution Gas Chromatography/High Resolution Mass Spectrometry (HRGC/HRMS)", Revision 1, February 2007

16.2. TestAmerica Knoxville Quality Assurance Manual (QAM), current revision.

16.3 TestAmerica Environmental Health and Safety Manual, current revision.

17. MISCELLANEOUS

17 1 Appendices

17.1.1 Appendix I Summary of Quality Control Requirements

17 1.2 Appendix II· Example Data Worksheet

17 1 3 Appendix III· Instructions for Using Calculation Software

17 1 4 Appendix IV Example Data Review Checklist

17 1 5 Appendix V Lipids Deliverable Contents

Appendix I: Summary of Quality Control Requirements

QC Check	Frequency	Target Criteria	Corrective Action
Method Blank	One per sample preparation batch of up to 20 samples	The result must be less than the RL	1 Reanalyze method blank 2 If 2 fails, reprepare and reanalyze samples associated with unacceptable blank 3 Report results if sample results >10x blank result or sample results ND
LCS	One per preparation batch of up to 20 samples	70 -130 % recovery	1 Reanalyze LCS 2 If 2 fails, reprepare and reanalyze samples associated with unacceptable LCS

Appendix II: Example Data Worksheet

TestAmerica Knoxville
Gravimetric Lipids Data Worksheet

Batch # 8221061
Prep Date 08/05/2008 1600
Comp Date 08/06/2008 1000

Analyst Initials SDO
Analyst LIMS Code 13451

Anal Date (mmddyy) 080808
Instr ID BAL

Reviewed by
Date

Lot Number	Lot Sample Number	Suffix	Method Code	QuantIMS RL (%)	WO #	Total Sample Weight (g)	Total Extract Volume (mL)	Volume Extract Used (mL)	Final Sample Weight (g)	Tare Weight (Vial) (g)	Dry Weight (Vial+Extract) (g)	Residue Weight (g)	% Lipids
H8H050117	1		4W - MK	1	KTLM71AA	10 78	10 0	1 0	1 078	26 1649	26 1679	0 0030	0 3
H8H050117	2		4W - MK	1	KTLNP1AA	10 01	10 0	1 0	1 001	26 0396	26 0418	0 0022	0 2
H8H050117	3		4W - MK	1	KTLNV1AA	3 92	10 0	1 0	0 392	25 9324	25 9355	0 0031	0 8
H8H050117	4		4W - MK	1	KTLNX1AA	10 39	10 0	1 0	1 039	26 5277	26 5316	0 0039	0 4
H8H050117	5		4W - MK	1	KTLN01AA	3 53	10 0	1 0	0 353	26 2475	26 2506	0 0031	0 9
H8H050117	6		4W - MK	1	KTLN21AA	10 43	10 0	1 0	1 043	25 9430	25 9464	0 0034	0 3
H8H050117	7		4W - MK	1	KTLN71AA	10 65	10 0	1 0	1 065	26 2869	26 2978	0 0109	1 0
H8H050117	8		4W - MK	1	KTLN91AA	10 45	10 0	1 0	1 045	26 4551	26 4593	0 0042	0 4
H8H050117	9		4W - MK	1	KTLPA1AA	4 82	10 0	1 0	0 482	26 5226	26 5259	0 0033	0 7
H8H050117	10		4W - MK	1	KTLPE1AA	8 20	10 0	1 0	0 820	26 5256	26 5308	0 0052	0 6
H8H050117	11		4W - MK	1	KTLPG1AA	10 00	10 0	1 0	1 000	26 0471	26 0495	0 0024	0 2
H8H080000	61	B	4W - MK	1	KTTCV1AA	10 00	10 0	1 0	1 000	25 9493	25 9494	0 0001	0 0
H8H080000	61	C	4W - MK	1	KTTCV1AC	10 00	10 0	1 0	1 000	26 3473	26 3666	0 0193	1 9

Spike Information

Spike	Standard ID	Spike Vol (mL)	Std Conc (mg/mL)	Work Order	Final Sample Weight (g)	True Spike Conc (% Lipids)
LCS	EL084	0 1	200 0	KTTCV1AC	1 000	2 00

Reagents	
MeCl2 Lot #	G03401
Acetone Lot #	NA

Comments

Final Sample Weight (g) = Total Sample Weight (g) x Volume Extract Used (mL) / Total Volume Extract (mL)
Residue Weight (g) = Dry Weight (g) - Tare Weight (g)
% Lipids = 100 x Residue Weight (g) / Final Sample Weight (g)
True Spike Concentration (% Lipids) = 100 x Standard Concentration (mg/mL) x Spike Volume (mL) / Final Sample Weight (g) x 1 g / 1000 mg

Appendix III: Instructions for Using %Lipids Calculation Software

1 Batch the samples using Mass Batching
2 Open the batch in QuantIMS. Enter the Soxhlet extraction start and stop dates and times as the prep start and prep completion dates and times. Add a blank and LCS to the batch.
3 Enter the sample initial weights and final volumes into QuantIMS **before** loading the batch into this spreadsheet Note The total volume of sample extract prior to removing the aliquot for lipids (typically 10 mL) should be entered into QuantIMS as the final sample volume
4 Open Excel
5 Select **View**, then **Task Pane** The Task Pane will show up on the right hand side of the screen Click on **General Templates** under the New from Template heading
6 Select the **Knx OrgPrep** tab
7 Select Gravimetric Lipids Sample Analysis Rev 0 xlt
8 When prompted, select **Enable Macros**
9 Log on to QuantIMS
10. Select the **% Lipids - Samples** worksheet.
11. Enter the batch number in cell B1 Press Enter and the press the **Get Batch Info** button. The following information will be populated
    - Prep Date – Cell B2
    - Comp Date – Cell B3
    - Lot Number – Column A
    - Lot Sample Number – Column B
    - Suffix – Column C
    - Method Code – Column D
    - QuantIMS LDL (%) – Column E
    - WO# - Column F
    - Sample Weight (g) - Column G
12 Print the % Lipids - Samples worksheet and use it to record the total extract volume (typically 10 mL), volume of extract used (typically 1 mL), tare weight of the vial (g) and dry weight of the vial + extract (g) for each sample Also, enter the lot numbers of the reagents used for the LCS and any comments.
13 The analyst performing the % lipids sample analysis will perform the following functions after the weights are recorded·
    - Ensure that the sample preparation start and completion dates in cells B2 and B3 are correct. If they are not, correct the dates in QuantIMS and then re-enter the batch number in cell B1
    - Ensure that the sample weights in column G are correct. If they are not, correct the weights in QuantIMS and then re-enter the batch number in cell B1.
    - Enter the Total Extract Volume (mL) and Volume of Extract Used (mL) in columns H and I
    - Transcribe the sample tare weight and dry weight to columns K and L
    - Enter Analyst Initials and Analyst QuantIMS Code in cells I2 and I3
    - Enter analysis date in cell L2 in mmddyy format (e.g , 01/25/08 should be entered as 012508)
    - Enter the LCS Spike Standard ID in cell B37

- Enter the volume of spike added (mL) to the LCS in cell C37
- Enter the spike Standard Concentration (mg/mL) in cells D37
- Enter the lot numbers of the reagents used for the LCS in cells M37 and M38
- Enter any comments in cells B39 and A40
- Select File, then Save As, and save the workbook to the \\knxsvr1\ Organic Prep\Gravimetric Lipids Spreadsheets directory The filename should include the batch number (e g., Grav Lipids Batch 5314235 xls)
- Print the worksheet and verify that the data entry is correct by checking the worksheet against the handwritten worksheet
- Press the [Upload] button on the top of the worksheet to upload the sample results, LCS true spike amount, analysis date and analyst code
- Print the final worksheets after the workbook has been saved and verify that the results were uploaded correctly (compare worksheet to the F6 report).

14 After 2nd level review, enter initials in cell N2 by signature with black ink and enter the review date in cell N3.

Appendix IV: Example Data Review Checklist

TestAmerica Knoxville Gravimetric Percent Lipids Data Review / Narrative Checklist
SOP KNOX-OP-0020, Rev 1
Page 1 of 1

Lot Number(s)	
Batch Number(s)	
Analysis Date	

Review Items	1st Level √ NA	Y	N	**If No, why is data reportable?**	**2nd √**
1 Were PM checklists (L40) Lot Summary and any applicable QAS reviewed?					
2 Method blank done per batch?					
3 Method blank < RL?				☐ [mb7] Sample results > 10x higher than blank	
4 LCS done per batch?					
5 LCS within control limits (70-130% R)?					
6 Were all transcriptions verified to be correct?					
7 Were the sample weights, total extract volumes and volumes of extract used verified to be correct?					
8 Final report/F6 correct? (Verify results RLs, units, dates LCS amounts)					
9 Are all nonconformances documented/discussed in narrative?				NCM#	

1st Level Reviewed by	**Date**
Comments	

2nd Level Reviewed by	**Date**
Comments	

NOTE Nonconformance memos are required for **bold** and *italicized* [autotext] statements **Bold** = deficiency *italicized* = anomaly

* Such action must be taken in consultation with client

OP056R01doc, 052009

Appendix V: Percent Lipids Deliverable

GRAVIMETRIC PERCENT LIPIDS DELIVERABLE
Narrative Description of analyses performed Add autotext to describe any deficiencies or observations about samples/QC found during analysis
Original Data Review Checklists
SAMPLE DATA SUMMARY *(REP R02)*
• QuantIMS (Q) Sample Result Reports *(in QuantIMS order, e g , H7J120105-001,-002 H7J230111-001,-002)*
• Q Method Blank Reports
• Q Laboratory Control Sample Evaluation and Data Reports
SAMPLE RESULTS *(REP R02)*
• Q Sample Result Reports *(in QuantIMS order)*
QC SUMMARY *(REP R02)*
• Q Method Blank Reports
• Q Laboratory Control Sample Evaluation and Data Reports
RAW DATA
• Copy of Data Review Checklist (form OP0056)
• Gravimetric Lipids Data Worksheets (Final and handwritten)
PURGE FILE
• Lot Summary (SAM S33)
• PM Checklists (LIM L40)
• Batch Review Sheets (F6 Reports)
• Any unused data

Attachment 12

KNOX-ID-0013: Analysis of Polychlorinated Biphenyl (PCB) Isomers by Isotope Dilution HRGC/HRMS, REV-8, April 1, 2009, Effective June 4, 2009

Controlled Copy
Copy No uncontrolled copy

TESTAMERICA KNOXVILLE
SOP CHANGE FORM

SOP NUMBER: KNOX-ID-0013 Revision 8
SOP TITLE: Analysis of Polychlorinated Biphenyl (PCB) Isomers by Isotope Dilution HRGC/HRMS
SOP SECTIONS AFFECTED BY CHANGE: Table 12 – Assignment of Sample Preparation Protocols
REASON FOR ADDITION OR CHANGE: The sample preparation protocols have been modified.
CHANGE EFFECTIVE FROM: 9/28/09
CHANGE OR ADDITION (SPECIFY SECTION; USE ADDITIONAL SHEETS IF NECESSARY) See attached sheet.
SUBMITTED BY/DATE: Robyn M. Wagner 9/28/09 RMWagner 9/28/09
APPROVED BY:

Daniel C Gabriel Technical Reviewer Signature	9-28-09 Date
Barry Lee Ashley Environmental Health & Safety Signature	9-28-09 Date
Christopher Rogers QA Signature	09/28/09 Date
[signature] Management Signature	9/28/09 Date

Table 12 – Assignment of Sample Preparation Protocols

1668 Protocol	Protocol Name	Sample Amount Extracted (g)	Fraction of Extract Cleaned	IS Added (mL)	Cleanup Std Added (mL)	Recovery Std Added (µL)	Extract Delivery Volume (µL)	DF in Prep	Prep Split Factor	QuantIMS Final Volume (µL)
P1	Clean	5	1	1	1	100	50	1	1	50
P2	Low	2	1	1	1	100	100	1	1	100
P3	Medium	1 25	1/2	2	1 (added after split)	100	250	2 5	2	200
P4	High	1	1/4	4	1 (added after split)	100	500	5	4	400

QuantIMS Final Volume (µL) = Extract Delivery Volume (µL) x Prep Split Factor x (nominal extract volume) / Extract Delivery Volume (µL)[1]

[1] Nominal extract volume is 50 µL for protocol 1 and 100 µL for protocols 2, 3 and 4

TESTAMERICA KNOXVILLE

STANDARD OPERATING PROCEDURE

TITLE: Analysis of Polychlorinated Biphenyl (PCB) Isomers by Isotope Dilution HRGC/HRMS

(SUPERSEDES: KNOX-ID-0013, Revision 7)

Prepared By: Melissa Sterling Davidson 4-20-09

Reviewed By: Daniel C Golden 4-20-09
Technical Specialist

Approved By: Christopher White Ryall 04/27/09
Quality Assurance Manager

Approved By: Barry Li Arley 4-28-09
Environmental, Health and Safety Coordinator

Approved By: 4-28-09
Laboratory Director

Proprietary Information Statement:

This documentation has been prepared by TestAmerica Laboratories solely for TestAmerica's own use and the use of TestAmerica's customers in evaluating its qualifications and capabilities in connection with a particular project The user of this document agrees by its acceptance to return it to TestAmerica upon request and not to reproduce, copy, lend, or otherwise disclose its contents, directly or indirectly, and not to use if for any other purpose other than that for which it was specifically provided. The user also agrees that where consultants or other outside parties are involved in the evaluation process, access to these documents shall not be given to said parties unless those parties also specifically agree to these conditions.

THIS DOCUMENT CONTAINS VALUABLE CONFIDENTIAL AND PROPRIETARY INFORMATION. DISCLOSURE, USE OR REPRODUCTION OF THESE MATERIALS WITHOUT THE WRITTEN AUTHORIZATION OF TESTAMERICA LABORATORIES IS STRICTLY PROHIBITED. THIS UNPUBLISHED WORK BY TESTAMERICA IS PROTECTED BY STATE AND FEDERAL LAW OF THE UNITED STATES. IF PUBLICATION OF THIS WORK SHOULD OCCUR THE FOLLOWING NOTICE SHALL APPLY:

COPYRIGHT 2009 TESTAMERICA LABORATORIES, INC ALL RIGHTS RESERVED.

1 Scope and Application

1 1 This procedure is designed to meet analytical program requirements where HRGC/HRMS analysis of polychlorinated biphenyl (PCB) isomers is specified The procedure is used by TestAmerica Knoxville for the detection and quantitative measurement of all 209 PCB isomers in a variety of environmental matrices at part-per-trillion (ppt) to part-per-quadrillion (ppq) concentrations This procedure is based on EPA method 1668A

1 2 The compounds listed in Table 1 may be determined by this procedure. The detection limits and quantitation levels in this method are usually dependent on the level of interferences rather than instrumental limitations. The estimated minimum levels (EMLs) in Table 4 are the levels at which the PCBs can be determined with only common laboratory interferences present The actual limits of detection and quantitation will vary depending on the complexity of the matrix.

1 3 The Low Calibration Levels (LCL's) of the method are listed in Table 3 for individual isomers Analysis of a one-tenth aliquot of the sample permits measurements of concentrations up to 10 times the upper calibration range Samples containing concentrations of PCB's that are greater than ten times the upper calibration are analyzed by protocols designed for such concentration levels

1 4 The GC/MS portions of this method are for use only by analysts experienced with HRGC/HRMS or under the close supervision of such qualified persons Each laboratory that uses this method must demonstrate the ability to generate acceptable results using the procedure in section 9 1.

1 5 This procedure is based on "performance-based" methods These reference methods allow modifications to overcome interferences or lower the cost of measurements, if all performance criteria in the methods are met and method equivalency is established. Deviations from the referenced methods have been incorporated into this procedure and are listed in section 17.1. Deviations to this procedure are only allowed as specified in section 11.1.

1 6 Because of the extreme toxicity of many of these compounds, the analyst must take the necessary precautions to prevent exposure to materials known or believed to contain PCBs It is the responsibility of the laboratory personnel to ensure that safe handling procedures are employed. Section 5 of this procedure discusses safety procedures

2 Summary of Method

2 1 Screening and protocol assignment.

2 1 1 All solid, semi-solid and fish tissue samples are screened by GC/ECD prior to extraction Aqueous samples may be screened if the potential for congener levels above 40 ng/L exists Variations to sample size, spiking levels and final volume are established based on the screening result

2 2 Extraction

2 2 1 Aqueous samples (samples containing less than one percent solids) Stable isotopically labeled analogs of the toxic PCBs plus additional labeled PCB's are spiked into a 1-L sample, and the sample is extracted with methylene chloride using separatory funnel techniques

2.2 2 Solid and semi-solid (but not tissue) A 1 0 g sub-sample is screened to determine the greatest concentration for individual congeners Based on the screen, the sample is prepared by one of four protocols Each protocol defines the sample amount to be extracted, the fraction of the extract to be used, and the final extract volume Protocol 1 is for samples which can be processed without adjustments for contamination In this protocol, the labeled compounds are spiked into a sample containing 10 g of solids The sample is extracted for 16 hours with an appropriate solvent using a Soxhlet extractor The extract is concentrated for cleanup. If other analyses are to be performed on the same extract, the extract is split and a separate analysis is performed on each extract fraction

2 2.3 **Note** Sample sizes may be adjusted for dry weight or processed as received. The laboratory default is to process as received The sample amount extracted can be adjusted to a minimum dry weight, if specified in client requirements or a quality assurance summary by the project manager

2.2 4 Multi-phase samples Samples containing multiple phases are separated and the phases are extracted following the procedures for the appropriate matrix. The extracts may be combined for cleanup and analysis or processed separately Specific handling of multi-phase samples should be discussed and documented with the project manager prior to extraction of samples

2 2 5 Fish and other tissue A 1 0 g sub-sample is screened to determine the greatest concentration for individual congeners. Based on the screen, the sample is prepared by one of four protocols. Each protocol defines the sample amount to be extracted, the fraction of the extract to be used, and the final extract volume Protocol 1 is for samples which can be processed without adjustments for contamination. In this protocol, a 20-g aliquot of sample is homogenized, and a 10-g aliquot is spiked with the labeled compounds. The sample is blended with sodium sulfate, and extracted for 16 hours using methylene chloride·hexane (1 1) in a Soxhlet extractor A portion of the extract is evaporated to dryness and used to determine the lipid content The remaining extract is concentrated for cleanup

2.2.6 Non-aqueous liquids such as oils and organic solvents are diluted or solvent exchanged in hexane.

2 3 After extraction, samples may be cleaned up using gel-permeation chromatography, silica gel chromatography, back-extraction with sulfuric acid, and Florisil column

2.3 chromatography.

2 4 After cleanup, the extract is concentrated to either 100 uL or 20 uL Recovery standards are added to each extract, and an aliquot of the extract is injected into the gas chromatograph The analytes are separated by the GC and detected by a high-resolution (≥10,000) mass spectrometer Two exact m/z's are monitored for each analyte.

2 5 An individual PCB congener is identified by comparing the GC retention time and ion-abundance ratio of two exact m/z's with the corresponding retention time of an authentic standard and the theoretical or acquired ion-abundance ratio of the two exact m/z's

2 6 Quantitative analysis is performed using selected ion current profile (SICP) areas, in one of two ways

2 6 1 For concentration of each compound is determined using the internal standard technique

2.7 The quality of the analysis is assured through reproducible calibration and testing of the extraction, cleanup, and GC/MS systems

3 Definitions

These definitions and purposes are specific to this method but conform to common usage as much as possible

Note Terminology differences existing in some isotope dilution reference methods regarding the functionality of the labeled analogs may lead to confusion For example, EPA's Office of Solid Waste methods (8280, 8290) use the term "Internal Standards" to describe the labeled analogs which are added to the sample prior to extraction and used to quantitate the native targets EPA's Office of Water methods (1613B, 1668 Draft) use the term "Labeled Analogs" to describe these same compounds while using the term "Internal Standards" to describe the labeled analogs which are added to the extract just prior to analysis and used to quantitate the recovery of the labeled analogs added before extraction EPA's Office of Solid Waste methods (8280, 8290) uses the term "Recovery Standards" to describe these later labeled analogs

The terminology conventions established by the EPA's Office of Solid Waste methods (8280, 8290) are used in the laboratory for all Standard Operating Procedures and internal communications as defined in this section

3 1 Analyte - A PCB tested for by this method The analytes are listed in Table 1

3 2 Calibration standard (CAL) - A solution prepared from a secondary standard and/or stock solutions and used to calibrate the response of the instrument with respect to analyte concentration

3 3 Calibration verification standard (VER) - The mid-point calibration standard (CS3) that is used to verify calibration. See Table

3 4 CB - Chlorinated biphenyl congener One of the 209 individual chlorinated biphenyl congeners determined using this Method The 209 CBs are listed in Table 1.

3 5 Cleanup Standard - Isotopically labeled compound that is added to samples, blanks, quality control samples, and calibration solutions. It is added to the samples after extraction but prior to extract cleanup, and is used to judge the efficiency of the cleanup procedures

3.6 Congener - Any member of a particular homologous series, for example, 2,2'-DiCB.

3 7 CS0.5, CS1, CS2, CS3, CS4, CS5 - See Calibration standards and Table .

3 8 Estimated Detection Limit (EDL) The sample specific estimated detection limit (EDL) is the concentration of a given analyte required to produce a signal with a peak height of at least 2 5 times the background signal level

3.9 Estimated Maximum Possible Concentration (EMPC) The calculated concentration of a signal having the same retention time as a PCB congener but which does not meet the other qualitative identification criteria defined in the method

3 10 Estimated Minimum Detection Limit (EMDL) – The lowest concentration at which an analyte can be detected with common laboratory interferences present

3 11 Estimated Minimum Level (EML) – The lowest concentration at which an analyte can be measured reliably with common laboratory interferences present

3.12 Field blank - An aliquot of reagent water or other reference matrix that is placed in a sample container in the laboratory or the field, and treated as a sample in all respects, including exposure to sampling site conditions, storage, preservation, and all analytical procedures The purpose of the field blank is to determine if the field or sample transporting procedures and environments have contaminated the sample

3 13 GC - Gas chromatograph or gas chromatography

3 14 Homologous Series - A series of compounds in which each member differs from the next member by a constant amount. The members of the series are called homologs

3 15 HRGC - High resolution GC.

3 16 HRMS - High resolution MS

3 17 ICV Initial Calibration Verification Standard A calibration standard from a second source, traceable to a national standard if possible The ICV is analyzed after the Initial calibration to verify the concentration of the Initial Calibration Standards.

3.18 Internal Standards (IS) Isotopically labeled analogs of the target analytes that are added to every sample, blank, quality control spike sample, and calibration solution. They are added to the sample before extraction and are used to calculate the

concentration of the target analytes or detection limits

3 19 IPR - Initial precision and recovery, four aliquots of the diluted PAR standard analyzed to establish the ability to generate acceptable precision and accuracy An IPR is performed prior to the first time this method is used and any time the method or instrumentation is modified

3 20 Isomer - Chemical compounds that contain the same number of atoms of the same elements, but differ in structural arrangement and properties. For example, 4-DiCB and 9-DiCB are structural isomers

3.21 Laboratory blank - See Method blank

3.22 Laboratory control sample (LCS) - See Ongoing precision and recovery standard (OPR)

3 23 Laboratory reagent blank - See Method blank

3 24 Level of Chlorination (LOC) Congeners – The first and last eluting congeners in each homolog (or level of chlorination) (For the SPB-Octyl Column the LOC Congeners are 1, 3, 4, 15, 19, 37, 54, 77; 104, 126, 155, 169, 188, 189, 202, 205; 208, 206; 209)

3.25 Method blank - An aliquot of a clean test matrix that is treated exactly as a sample including exposure to all glassware, equipment, solvents, reagents, internal standards, and surrogates that are used with samples The method blank is used to determine if analytes or interferences are present in the laboratory environment, the reagents, or the apparatus

3 26 Minimum Level (ML) - The level at which the entire analytical system must give a recognizable signal and acceptable calibration point for the analyte It is equivalent to the concentration of the lowest calibration standard, assuming that all Method-specified sample weights, volumes, and cleanup procedures have been employed

3 27 MS - Mass spectrometer or mass spectrometry

3 28 OPR - Ongoing precision and recovery standard (OPR), a laboratory blank spiked with known quantities of analytes The OPR is analyzed exactly like a sample. Its purpose is to assure that the results produced by the laboratory remain within the limits specified in this method for precision and recovery.

3.29 PAR - Precision and recovery standard, secondary standard that is diluted and spiked to form the IPR and OPR

3 30 PFK - Perfluorokerosene; the mixture of compounds used to calibrate the exact m/z scale in the HRMS

3.31 Primary dilution standard - A solution containing the specified analytes that is purchased or prepared from stock solutions and diluted as needed to prepare calibration solutions and other solutions

3.32 Quality control check sample (QCS) - A sample containing all or a subset of the analytes at known concentrations. The QCS is obtained from a source external to the laboratory or is prepared from a source of standards different from the source of calibration standards It is used to check laboratory performance with test materials prepared external to the normal preparation process

3.33 PCB - Polychlorinated biphenyl

3.34 Reagent water - Water demonstrated to be free from the analytes of interest and potentially interfering substances at the method minimum level for the analyte.

3 35 Recovery Standard (RS)· Isotopically labeled compounds which are added to every sample, blank, and quality control spike sample extract prior to analysis They are used to measure the recovery of the internal standards and the cleanup standards

3.36 Relative Percent Difference (RPD) A measure of the difference between two values normalized to one of the values It is used to determine the accuracy of the concentration measurements of second source verification standards

3 37 Relative standard deviation (RSD) - The standard deviation times 100 divided by the mean Also termed "coefficient of variation."

3 38 RF - Response factor See Section 10 3 4

3 39 RRF - Relative response factor See Section 10 3.4

3.40 RSD - See Relative standard deviation.

3.41 SDS - Soxhlet/Dean-Stark extractor, an extraction device applied to the extraction of solid and semi-solid materials.

3 42 SICP - Selected ion current profile, the line described by the signal at an exact m/z.

3 43 SPE - Solid-phase extraction, an extraction technique in which an analyte is extracted from an aqueous sample by passage over or through a material capable of reversibly adsorbing the analyte Also termed liquid-solid extraction

3.44 Specificity - The ability to measure an analyte of interest in the presence of interferences and other analytes of interest encountered in a sample.

3 45 Stock solution - A solution containing an analyte that is prepared using a reference material traceable to EPA, the National Institute of Science and Technology (NIST), or a source that will attest to the purity and authenticity of the reference material.

3.46 Surrogate Standards (SS) - Isotopically labeled compounds that are added to XAD samples and calibration solution They are added to XAD sampling tubes before sampling and are used to measure sampling and recovery efficiency

3 47 Toxic Congeners (or Toxic Isomers) PCBs determined by the World Health Organization and USEPA to have dioxin-like toxicity. (PCBs 77, 81, 105, 114, 118, 123, 126, 156, 157, 167, 169, 189)

3.48 Toxic/LOC Congeners. PCBs belonging to either the Toxic Congeners list, defined in Section 3 47 or the LOC Congeners list, defined in Section 3 24

3 49 VER - See Calibration verification standard

3 50 Additional definitions can be found in the Knoxville LQM glossary.

4 Interferences

4.1 Solvents, reagents, glassware, and other sample processing hardware may yield artifacts and/or elevated baselines causing misinterpretation of chromatograms Specific selection of reagents and purification of solvents by distillation in all-glass systems may be required Where possible, reagents are cleaned by extraction or solvent rinse The non-coplanar PCB congeners 105, 114, 118, 123, 156, 157, 167, and 180 have been shown to be very difficult to completely eliminate from the laboratory at the minimum levels in this method, and baking of glassware in a kiln or furnace at 450 - 500°C may be necessary to remove these and other contaminants.

4.2 Proper cleaning of glassware is extremely important, because glassware may not only contaminate the samples but may also remove the analytes of interest by adsorption on the glass surface. For specific glassware cleaning procedures, see SOP KNOX-QA-0002, current revision, "Glassware Cleaning"

4 3 All materials used in the analysis shall be demonstrated to be free from interferences by running laboratory method blanks (section 9 3) initially and with each sample batch (samples started through the extraction process on a given 12-hour shift, to a maximum of 20 samples).

4 3 1 The method blank consists of reagent water for water samples, sand for solid samples, corn oil or fish oil for tissue samples, or reagent solvent for waste samples.

4 4 Interferences coextracted from samples will vary considerably from source to source, depending on the diversity of the site being sampled Interfering compounds may be present at concentrations several orders of magnitude higher than the PCBs The most frequently encountered interferences are chlorinated dioxins and dibenzofurans, methoxy biphenyls, hydroxy-diphenyl ethers, benzylphenyl ethers, polynuclear aromatics, and pesticides. Because very low levels of PCBs are measured by this method, the elimination of interferences is essential The cleanup steps given in section 11 9 can be used to reduce or eliminate these interferences and thereby permit reliable determination of the PCBs at the levels shown in Table 3

4.5 Each piece of reusable glassware is numbered to associate that glassware with the processing of a particular sample. This will assist the laboratory in tracking possible sources of contamination for individual samples, identifying glassware associated with highly contaminated samples that may require extra cleaning, and determining when glassware should be discarded

4.6 Cleanup of tissue - The natural lipid content of tissue can interfere in the analysis of

tissue samples for the PCBs. The lipid contents of different species and portions of tissue can vary widely Lipids are soluble to varying degrees in various organic solvents and may be present in sufficient quantity to overwhelm the column chromatographic cleanup procedures used for cleanup of sample extracts. Lipids must be removed by the acid cleanup procedure in section 11 9.3, followed by Florisil (section 11 9 4)

5 Safety

5.1 Employees must abide by the policies and procedures in the Corporate Safety Manual, Radiation Safety Manual and this document

5 2 Eye protection that satisfies ANSI Z87 1 (as per the Corporate Safety Manual), laboratory coat and appropriate gloves must be worn while samples, standards, solvents and reagents are being handled Disposable gloves that have become contaminated will be removed and discarded, other gloves will be cleaned immediately.

5 2 1 Latex and vinyl gloves provide no protection against most of the organic solvents used in this method For the operations described herein, Nitrile clean room gloves are worn For operations using solvents that splash, silver shield gloves are recommended Silver shield gloves protect against breakthrough for most of the solvents used in this procedure

5 3 The effluents of sample splitters for the gas chromatograph and roughing pumps on the mass spectrometer must be vented to the laboratory hood exhaust system or must pass through an activated charcoal filter

5 4 The gas chromatograph and mass spectrometer contain zones that have elevated temperatures. The analyst needs to be aware of the locations of those zones, and must cool them to room temperature prior to working on them or use thermal protection when working on them while they are above room temperature

5 5 The mass spectrometer is under deep vacuum. The mass spectrometer must be brought to atmospheric pressure prior to working on the source. Alternatively, the source may be removed from the vacuum manifold through a vacuum interlock.

5 6 There are areas of high voltage in both the gas chromatograph and the mass spectrometer Depending on the type of work involved, either turn the power to the instrument off, or disconnect it from its source of power If the work involved requires measurement of voltage supplies, the instrument may be left on

5 7 When using a scalpel, cut away from yourself. If you are holding something, cut away from your hand

5.8 Primary Materials Used The following is a list of the materials used in this method, which have a serious or significant hazard rating. **NOTE: This list does not**

include all materials used in the method. The table contains a summary of the primary hazards listed in the MSDS for each of the materials listed in the table. A complete list of materials used in the method can be found in the reagents and materials section Employees must review the information in the MSDS for each material before using it for the first time or when there are major changes to the MSDS

Material	Hazards	Exposure Limit (2)	Signs and symptoms of exposure
Sulfuric Acid (1)	Corrosive, Oxidizer, Dehydradator	1 mg/m^3	This material will cause burns if comes into contact with the skin or eyes Inhalation of vapors will cause irritation of the nasal and respiratory system
Methylene Chloride	Carcinogen, Irritant	25 ppm-TWA, 125 ppm-STEL	Causes irritation to respiratory tract Has a strong narcotic effect with symptoms of mental confusion, light-headedness, fatigue, nausea, vomiting and headache Causes irritation, redness and pain to the skin and eyes Prolonged contact can cause burns Liquid degreases the skin May be absorbed through skin
Hexane	Flammable, Irritant	500 ppm-TWA	Inhalation of vapors irritates the respiratory tract Overexposure may cause lightheadedness, nausea, headache, and blurred vision Vapors may cause irritation to the skin and eyes
Methanol	Flammable, Poison, Irritant	200 ppm-TWA	A slight irritant to the mucous membranes Toxic effects exerted upon nervous system, particularly the optic nerve Symptoms of overexposure may include headache, drowsiness and dizziness Methyl alcohol is a defatting agent and may cause skin to become dry and cracked Skin absorption can occur, symptoms may parallel inhalation exposure Irritant to the eyes
Toluene	Flammable, Poison, Irritant	200 ppm-TWA 300 ppm-Ceiling	Inhalation may cause irritation of the upper respiratory tract Symptoms of overexposure may include fatigue, confusion, headache, dizziness and drowsiness Peculiar skin sensations (e g pins and needles) or numbness may be produced Causes severe eye and skin irritation with redness and pain May be absorbed through the skin
Acetone	Flammable	1000 ppm-TWA	Inhalation of vapors irritates the respiratory tract May cause coughing, dizziness, dullness, and headache
Nonane	Flammable	None established	Harmful if inhaled/swallowed Vapor/mist is irritating to eyes, mucous memebranes and upper respiratory tract Causes skin irritiation
2-Propanol	Flammable	400 ppm -TWA	Flammable liquid and vapor Harmful if swallowed or inhaled Causes irritation to eyes and respiratory tract Affects central nervous system May be harmful if absorbed through the skin May cause irritation to the skin

Ethyl Ether	Flammable, Irritant, Peroxide Former	400 ppm-TWA	General anesthesia by inhalation can occur Continued exposure may lead to respiratory failure or death Early symptoms include irritation of nose and throat, vomiting, and irregular respiration, followed by dizziness, drowsiness, and unconsciousness May cause irritation, redness and pain to the eyes Irritating to the skin and mucous membranes by drying effect Can cause dermatitis on prolonged exposure May be absorbed through skin **May form explosive peroxides on long standing or after exposure to air or light. This material must be disposed of with six months.**
Benzene	Flammable, Toxic, Carcinogen	PEL 1 ppm TWA , 5 ppm, 15 min STEL	Causes skin irritation Toxic if absorbed through skin Causes severe eye irritation Toxic if inhaled Vapor or mist causes irritation to mucous membranes and upper respiratory tract Exposure can cause narcotic effect Inhalation at high concentrations may have an initial stimulatory effect on the central nervous system characterized by exhilaration, nervous excitation and/or giddiness, depression, drowsiness or fatigue Victim may experience tightness in the chest, breathlessness, and loss of consciousness
1 – Always add acid to water to prevent violent reactions			
2 – Exposure limit refers to the OSHA regulatory exposure limit			

5 9 Chemicals that have been classified as **carcinogens**, **potential carcinogens**, or **mutagens include** benzene, methylene chloride, polychlorinated biphenyls, and toluene The toxicity or carcinogenicity of each reagent used in this method is not precisely defined; however, each chemical compound should be treated as a potential health hazard From this viewpoint, exposure to these chemicals must be kept to a minimum)

5 10 Chemicals known to be **flammable** are acetone, benzene, hexane, nonane, tetradecane, and toluene

5.11 The following materials are known to be **corrosive**· sulfuric acid

5.12 Exposure to chemicals will be maintained as low as reasonably achievable, therefore, unless they are known to be non-hazardous, all samples will be opened, transferred and prepared in a fume hood, or under other means of mechanical ventilation. Solvent and waste containers will be kept closed unless transfers are being made

5 13 The preparation of all standards, reagents, and glassware cleaning procedures that involve solvents will be conducted in a fume hood with the sash closed as far as the operations will permit

5 14 Equipment goggles or a face shield **must** be used when employees are using solvents to rinse or clean glassware

5.15 The effluents of sample splitters for the gas chromatograph and roughing pumps on the mass spectrometer must be vented to the laboratory hood exhaust system or must pass through an activated charcoal filter.

5 16 Personal Hygiene Thorough washing of hands and forearms is recommended after each manipulation and before breaks (coffee, lunch, and shifts)

5 17 Confinement Work areas should be isolated and posted with signs. Glassware and tools should be segregated Benchtops should be covered with plastic backed absorbent paper.

5 18 Waste Good technique includes minimizing contaminated waste. Plastic bag liners should be used in waste cans.

5.19 Accidents· Remove contaminated clothing immediately, taking precautions not to contaminate skin or other articles. Wash exposed skin vigorously and repeatedly until medical attention is obtained.

5.20 All work must be stopped in the event of a known or potential compromise to the health or safety of laboratory personnel The situation must be reported immediately to a laboratory supervisor.

6 Equipment and Supplies

NOTE All glassware used in extraction and cleanup procedures is solvent rinsed 2 times before use with acetone, methylene chloride and hexane in that order Pre-extract Soxhlet apparatus with toluene for at least 4 hours. Rerinse the glassware with all 4 solvents once. See SOP KNOX-QA-0002, current revision, "Glassware Cleaning", for details

NOTE When extracting PCB aqueous samples, all the reusable glassware used in the extraction and concentration of the samples is identified with a "P" etched on the glassware Do note use any glassware in the extraction of PCB H2O's that does not have a "P" etched onto the glassware This glassware is only to be used for the extraction and concentration of aqueous samples for PCB analysis

6.1 Equipment for sample preparation

6 1 1 Laboratory fume hood of sufficient size to contain the sample preparation equipment listed below

6 1 2 Tissue homogenizer - Laboratory blender with glass body and stainless steel blades.

6 1.3 Equipment for determining percent moisture.

6.1 3 1 Oven - Capable of maintaining a temperature of 105 ±5°C

6.1 4 Balances.

6 1 4 1 Top loading - Capable of weighing 10 mg

6 2 Extraction apparatus.

6 2 1 Liquid/liquid extraction for water samples

6.2 1.1 Graduated cylinder, 1-L capacity.

6 2 1.2 Separatory funnels, 250-, 500-, and 2000 mL, with fluoropolymer stopcocks

6 2 2 Soxhlet/Dean-Stark (SDS) extractor for filters and solid/sludge samples.

6 2.2 1 Soxhlet - 50-mm ID, 200-mL capacity with 500-mL round bottom flask

6.2.2 2 Soxhlet - 64 mm ID, 500-mL capacity with 1000-mL round bottom flask

6.2 2 3 Glass condenser, capable of fitting top of Soxhlet or Dean Stark apparatus.

6 2 2.4 Thimble - Whatman high purity glass fiber thimbles

6 2 2.5 Dean Stark moisture trap, with fluoropolymer stopcock, to fit Soxhlet

6 2.2 6 Heating mantles with temperature controls

6.3 Flasks, Erlenmeyer, 500 mL

6.4 Beakers, 500-mL

6.5 Spatulas - Stainless steel.

6 6 Fluoropolymer squirt bottles, 500 mL

6 7 Filtration apparatus

6 7 1 Pyrex glass wool – Solvent rinsed

6 7 2 Glass funnel – 100 mm with short stem.

6.7 3 Buchner funnel – 15-cm

6 7 4 Glass-fiber filter paper for Buchner funnel above

6 7 5 Filtration flasks - 1 5- to 2 0-L, with side arm

6.8 Cleanup apparatus

6.8.1 Pipettes

6 8 1.1 Glass, 1 mL, Class A.

6 8 1.2 Borosilicate glass, disposable, Pasteur, 150-mm long x 5-mm ID.

6 8 1 3 Borosilicate glass, disposable, Pasteur, 230-mm long x 5-mm ID

6 8 1 4 Pipette Bulbs, rubber, disposable

6 8 1.5 Gel permeation chromatography system (J2 Scientific Accu Prep or equivalent)

6 8 1.6 Bio Beads (S-X3) -200-400 mesh, 70 gm (Bio-Rad Laboratories, Richmond, CA, Catalog 152-2750 or equivalent)

6 8 1.7 All disposable columns are solvent rinsed before use The solvents used are acetone, toluene, methylene chloride and hexane (in this order) Allow to air dry in a hood

6 8 1 8 Chromatographic column 420 mm x 25 mm ID glass column, for florisil cleanup

6 8.1 9 20mm x 240mm custom glass column with support ring and tapered tip, for silica gel cleanup

6 8.1 10 Ultraviolet detector Fixed wavelength (254 nm) and a semi-prep flow-through cell

6.8.2 Oven-For baking and storage of absorbents, capable of maintaining a constant temperature (±5°C) in the range of 105-250°C

6.9 Concentration apparatus.

6 9 1 Nitrogen blowdown apparatus - Rapidvap (Labconco) vented to a fume hood and/or N-Evap (Organomation Associates, inc , South Berlin, MA), installed in a fume hood

6 10 Sample vials

6 10 1 Borosilicate glass, 40 mL disposable with fluoropolymer cap

6.10.2 Mini vials, 1 1 mL capacity with a tapered bottom; with Teflon™-faced, rubber septa and screw caps

6.11 Gas chromatograph - Shall have splitless or on-column injection port for capillary column, temperature program with isothermal hold, and shall meet all of the performance specifications in Section 10.

6 11 1 Column #1 - 30 ±5-m long x 0 25±0 02-mm ID, 0.25-µm film SPB-Octyl (Supelco 2-4218, or equivalent)

6 11.2 Column #2 - 60m x 0 32mm ID x 0 25µm film thickness DB-5 or RTX-5 fused silica capillary column (J&W No 123-5062 or Restek No 10227) or equivalent

6 11 3 Column #3 – GC/ECD Screening – 30m X 0 32mm ID X 0.25µm film thickness DB-5 or RTX-5 or equivalent

6.12 Mass spectrometer - Electron impact ionization, shall be capable of repetitively

selectively monitoring 20 exact m/z's minimum at high resolution (≥10,000) during a period less than 1 0 second, and shall meet all of the performance specifications in Section 10.

6 13 GC/MS interface - The mass spectrometer (MS) shall be interfaced to the GC such that the end of the capillary column terminates within 1 cm of the ion source but does not intercept the electron or ion beams

6 14 Data system - Capable of collecting, recording, and storing MS data.

6 15 GC-ECD system for Sample Screening – Agilent 5890, 6890 or equivalent.

7 Reagents and Standards

CAUTION· Refer to Material Safety Data Sheets (MSDS) for specific safety information on chemicals and reagents prior to use or as needed

CAUTION During preparation of reagents, associates shall wear lab coat, gloves, safety glasses with side shields, and laboratory approved shoes as a minimum. Reagents shall be prepared in a fume hood

7 1 Sulfuric acid - Reagent grade (specific gravity 1 84)

7.2 Sodium chloride - Reagent grade, prepare at 5% (w/v) solution in reagent water.

7.3 Sodium sulfate, reagent grade, anhydrous (J T Baker 3375, or equivalent)- Sodium Sulfate is cleaned by putting approximately 600g of Sodium Sulfate in large amber-colored glass jars and completely covering with methylene chloride, stirring the mixture with a stirring rod and letting the Sodium Sulfate soak for 5 minutes. The methylene chloride is drained and this step is repeated. After the methylene chloride is drained the Sodium Sulfate is transferred to a Buchner Funnel fitted onto a Vacuum Flask and is rinsed 2 times with methylene chloride while a vacuum is being applied to the apparatus. The Sodium Sulfate is then placed into shallow borosilicate glass dishes where it is allowed to dry After drying, the Sodium Sulfate is transferred into pre-cleaned glass jars with fluoropolymer lined screw caps and are placed in a desiccator until needed

7 4 Purified nitrogen

7.5 Solvents - Acetone, toluene, n-hexane, 2-propanol, methanol, methylene chloride, ethyl ether and nonane, pesticide quality

7.6 Reagent water must be produced by a Millipore DI system or equivalent, being able to produce water with 18 mega ohm resistance Reagent water must be free of the analytes of interest as demonstrated through the analysis of method blanks

7.7 White quartz sand, Aldrich -50+70 mesh or equivalent, prepared by extracting with methylene chloride and/or baking at 450 °C for a minimum of 4 hours. After cooling store in a dessicator

7.8 Florisil, Pesticide residue (PR) grade (60/100) mesh, purchased activated at 1250°C (677°F), stored in glass container with fluoropolymer lined top. Fill a clean 1- to 2-L bottle 1/2 to 2/3 full with Florisil and place in an oven at 125-135 °C for a minimum of 6 hours

7.9 Perfluorokerosene (PFK) high boiling mass spectroscopy grade; bp 210-260°C, d^{20}_4 1.94; n^{20}_D 1.330, Fluka (Catalog No - 77275)

7 10 Tetrabutylammonium hydrogen sulfate Sigma Aldrich Cat No 155837-100g, or equivalent, 97% purity.

7 10.1 Tetrabutylammonium (TBA) sulfite reagent - Prepare the reagent by dissolving 3.39 g of tetrabutylammonium hydrogen sulfate in 100 ml of reagent water To remove impurities extract this solution three times with 20 ml portions of hexane After discarding the last hexane wash slowly add 25 g of sodium sulfite to the solution and shake bottle until the sodium sulfite dissolves. Record the date prepared, initials of the preparer and expiration date on the bottle label This solution can be stored for 1 month at room temperature in an amber bottle with a Teflon-lined lid

7.10 2 **NOTE** To prepare 50 ml of this reagent, halve the recipe listed above

7 11 Sodium sulfite. Sigma Aldrich Cat No 239321-500g or equivalent 98+% purity

7.12 Standards and Calibration Solutions Obtained as prepared solutions from Accustandard (New Haven, CT.), Cambridge Isotope Laboratories (CIL, Andover Massachusetts), and Wellington Laboratories (Guelph, Ontario, Canada) If the chemical purity is 98% or greater, the weight may be used without correction to compute the concentration of the standard. When not being used, standards are stored in the dark at room temperature in screw-capped vials with fluoropolymer-lined caps.

NOTE· When samples are ready to have the internal standards and native solutions applied, check the actual volume for spike solution contained in the designated Class A graduated cylinder with ground glass stopper against the volume last observed and recorded in the logbook If the volume is lower than the recorded volume within 2 mL or less the difference may be attributed to evaporative loss of acetone The volume of the solution may be adjusted with acetone to the volume last observed and recorded in the logbook. If the difference is greater than 2 mL, the spiking solution shall not be used A review is conducted to see if there has been a mistake made in the volume calculation in the logbook, or if the last use of the spiking solution was not properly recorded. If this does not result in clearly accounting for differences in the spiking solution volume, the solution is disposed of properly and a new solution is prepared for use Also, if the final volume of spiking solution falls below 10 mL after the last use of the day, the solution is disposed of properly and a new solution is prepared for use

7 12 1 Native PCB Calibration Stock – Custom PCB Standard containing all 209

congeners used as Certified Reference Standard (Accustandard Product No S-9994-4x) Stock solution purchased at 4 ug/mL in isooctane Once the ampoule has been sonicated and opened, the solution is transferred to an amber glass vial with fluoropolymer-lined cap and is used as received

7 12 2 PCB Congener Mix 1 through 5 standard solutions containing all 209 isomers are Certified Reference Standards (Accustandard Product No's M-1668A-1, M-1668A-2, M-1668A-3, M-1668A-4, M-1668A-5,) Stock solutions are purchased at 250-750 µg/mL in isooctane. Once the ampoule has been sonicated and opened, the solution is transferred to an amber glass vial with fluoropolymer-lined cap and is used as received These five mixes are run in triplicate to determine the retention times for each of the congeners and which congeners will co-elute for each new SPB Octyl column used

7 12 3 209 PCB ICAL Verification stock solution Prepared by combining the 5 PCB Congener Mixes referred to in section 7 12.2 and diluting to a concentration of 5000-15000 ng/mL in nonane.

7 12 4 Labeled PCB congener solutions used are Certified Reference Standards purchased from Cambridge Isotope Laboratories (CIL, Andover Massachusetts) and Wellington Laboratories (Guelph, Ontario, Canada). Stock solutions are purchased at 40 µg/mL or 50 µg/mL in nonane Once the ampoule has been sonicated and opened, the solution is transferred to an amber glass vial with fluoropolymer-lined cap and is used as received

7 12 5 Mixed stock standard solutions are prepared by diluting the stock solutions into nonane. The following mixed stock standard solutions are prepared,.

7 12 5 1 13C12 Labeled Internal Standard stock solution Prepared by diluting the individual stock solutions of the 13C12 labeled internal standards listed in section 7.12.3 and Table 5, to a concentration of 1000 ng/mL in nonane

7.12 5 2 13C12 Labeled Recovery Standard stock solution Prepared by mixing the individual stock solutions of the 13C12 labeled recovery standards listed in section 7 12 3 and Table 5, resulting in a concentration of 1000 ng/mL

7.12.5 3 13C12 Labeled Cleanup Standard Primary Stock solution Prepared by diluting the individual stock solutions of the 13C12 labeled cleanup standards listed in section 7.12 3 and Table 5, to a concentration of 5000 ng/mL in nonane

7 12.5.4 13C12 Labeled Surrogate Standard Primary Stock solution· Prepared by diluting the individual stock solutions of the 13C12 labeled surrogate standards listed in section 7 12 3 and Table 5, to a concentration of 5000 ng/mL in nonane.

7 12.6 Calibration Standard solutions (CS0 5 through CS5) are prepared by dilution of the stock standard solution prepared described section 7 12.1 in nonane and labeled stocks listed in section 7.12 5 Table 6 shows the calibration solutions components and final concentrations This series of solutions is used to establish linearity and relative response factors for all compounds in the initial calibration solutions These RRFs are used to quantify PCB congeners in the calibration verification (VER) and all samples. The CS3 standard is used for calibration verification (VER) The VER solution is used to verify chromatographic performance, and to update retention times and relative retention times

7.12 7 PAR PCB Spiking Solutions Prepared by dilution of the stock standard solution prepared described in section 7 12 1 to the concentrations specified in Table 3 with acetone in a volumetric flask. 1 0 mL of this solution is added to each IPR or OPR sample prior to extraction The concentration of this solution is verified by GC/MS before use

NOTE A low concentration PAR PCB spiking solution is prepared at 1 ng/mL for samples to be taken to a final volume of 20 µL (water samples). A high concentration PAR PCB spiking solution is prepared at 5 ng/mL for samples to be taken to 100 µL final volume (other matrices). The analyst must choose the correct solution to use for each sample

7.12 8 13C12 Labeled Internal Standard Spiking Solutions· Prepared by diluting the 13C12 labeled internal standard stock solution prepared in section 7 12.5.2 to the concentrations specified in Table 3with acetone in a volumetric flask. 1 0 mL of this solution is added to each sample prior to extraction The concentration of this solution is verified by GC/MS before use

NOTE· A low concentration $^{13}C_{12}$ labeled internal standard spiking solution is prepared at 2 ng/mL for samples to be taken to a final volume of 20 µL (water samples). A high concentration $^{13}C_{12}$ labeled internal standard spiking solution is prepared at 10 ng/mL for samples to be taken to 100 µL final volume (other matrices). The analyst must choose the correct solution to use for each sample

7.12 9 13C12 Labeled Cleanup Standard Spiking solutions Prepared by diluting the 13C12 Labeled Cleanup Standard Primary Stock solution prepared in section 7.12 5.4 to the concentrations specified in Table 5 with hexane in a volumetric flask. 1.0 mL of this solution is added to each sample prior to cleanups The concentration of this solution is verified by GC/MS before use

7.12 10 NOTE A low concentration $^{13}C_{12}$ labeled cleanup standard spiking solution is prepared at 2 ng/mL for samples to be taken to a final volume of 20 µL

(water samples) A high concentration $^{13}C_{12}$ labeled cleanup standard spiking solution is prepared at 10 ng/mL for samples to be taken to 100 µL final volume (other matrices). The analyst must choose the correct solution to use for each sample section 7 12 5 5 to the concentration specified in Table 3 with nonane in a volumetric flask 100 uL of this solution is added to each XAD tube or PUF cartridge prior to sampling. The concentration of this solution is verified by GC/MS before use

7.12 11 13C12 Labeled Recovery Standard Spiking solution· Prepared by diluting the 13C12 Labeled Recovery Standard Stock solution prepared in section 7 12 5 3 to the concentration specified in Table 3with nonane in a volumetric flask Depending upon the required final extract volume, 20uL or 100uL of this solution is added to each sample extract prior to analysis The concentration of this solution is verified by GC/MS before use

7 12.12 QC Check Sample - A QC Check Sample should be obtained from a source independent of the calibration standards. This check sample is a certified standard reference material (SRM) containing the PCBs in known concentrations in a sample matrix similar to the matrix under test The National Institute of Standards and Technology (NIST) in Gaithersburg, Maryland has an SRM 1944 – New York/New Jersey Waterway Sediment that the NYSDEC recommends for use

7 12 13 Initial Calibration Verification Standard This is a single solution containing all 209 individual PCBs as well as internal standards and recovery standards at the following concentrations

- mono, di, and tri CBs at 50ng/mL
- tetra, penta, hexa and hepta CBs at 100ng/mL
- octa, nona, and deca CBs at 150ng/mL
- internal standards and recovery standards are at the same concentration as the calibration standards (CS0.5 - CS5)

This solution is always analyzed immediately after the initial calibration

7.12.13.1 Combine 100 uL of 209 PCB ICAL verification stock solution (Section 7.12 3) (equivalent to 20 uL of each mix) with an 100 uL of the $^{13}C_{12}$ labeled internal standard stock solution (section 7 12 5.2), 100 uL of a 1/10 dilution of the $^{13}C_{12}$ labeled cleanup standard primary stock solution (Section 7 12 5 4), and 100 uL of $^{13}C_{12}$ labeled recovery standard stock solution (Section 7 12 5.3) and 600 uL of nonane to produce the concentrations listed in section 7.12 13.

7 12 13 2 Retention Time Calibration Mixes These are 5 solutions injected (in triplicate to establish the retention time data referenced in

section 10 2 3. Combine 20 uL of the stock specified in section 7.12.2 with an 100 uL of the $^{13}C_{12}$ labeled internal standard stock solution (section 7 12 5 2), 100 uL of a 1/10 dilution of the $^{13}C_{12}$ labeled cleanup standard primary stock solution (section 7.12.5 4), and 100 uL of $^{13}C_{12}$ labeled recovery standard stock solution (section 7 12 5 3) and 600 uL of nonane to produce the concentrations listed in section 7 12.13

8 Sample Collection, Preservation and Storage

8 1 Sampling is not performed for this method by TA Knoxville For information regarding sample shipping, refer to SOP KNOX-SC-0003, Sample Receipt and Login, current revision

8 2 Collect samples in amber glass containers following conventional sampling practices

NOTE Sample preservation, if required, must be performed at the time of collection and is the responsibility of the sample collector in accordance with the clients Quality Assurance Project Plan The methods referenced in section 15 provide sample collection and preservation guidance which may be used in the absence of a specific Quality Assurance Project Plan

8 3 Sample Storage

8 3.1 Maintain aqueous samples at 0-4°C from the time of collection until receipt at the laboratory Store aqueous samples in the dark at 0-4°C.

8 3 2 Maintain solid, semi-solid, oily, and mixed-phase, fish, and adipose tissue samples at <4°C from the time of collection until receipt at the laboratory. Fish and adipose tissue should be shipped with dry ice if at all possible Store solid, semi-solid, oil, fish, adipose tissue and mixed-phase in the dark at <-10°C

8.4 Holding Times

8 4 1 If stored according to the conditions specified in 8 3, samples may be stored for up to one year.

8.4 2 Store sample extracts in the dark at room temperature until analyzed. If stored in the dark at room temperature, sample extracts may be stored for up to one year.

9 Quality Control

9 1 Initial precision and recovery (IPR) samples are analyzed to demonstrate the ability to generate acceptable precision and accuracy

9.1 1 For aqueous samples, extract, clean, concentrate, and analyze four 1-L aliquots of reagent water spiked with labeled internal standards and the precision and recovery standard according to the procedures in section 11 For solid samples, extract, clean, concentrate, and analyze four aliquots of sand spiked with labeled internal standards and the precision and recovery standard according to the procedures in sections 11 For tissue samples extract, concentrate, clean and analyze four aliquots of corn or other vegetable oil or fish oil spiked with labeled internal standards and the precision and recovery standard according to the procedures in sections 11 All sample processing steps that are to be used for processing samples, including preparation, extraction, and cleanup shall be included in this test

9.1 2 Using the results of the set of four analyses, compute the average concentration (X) of the extracts in ng/mL and the relative standard deviation (RSD) of the concentration in ng/mL for each compound

9 1.3 For each PCB and labeled compound, compare RSD and X with the corresponding limits for initial precision and recovery in Table 10 If RSD and X for all compounds meet the acceptance criteria, system performance is acceptable and analysis of blanks and samples may begin If, however, any individual RSD exceeds the precision limit or any individual X falls outside the range for accuracy, system performance is unacceptable for that compound. Correct the problem and repeat the test.

9 2 Internal Standards

9 2.1 Every sample, blank, and QC sample is spiked with internal standards Internal standard recoveries in samples, blanks, and QC samples must be assessed to ensure that recoveries are within established limits When properly applied, results from isotope dilution techniques are independent of recovery The recovery of each internal standard should be within the limits in Table 10 . If the recovery is outside these limits the following corrective action should be taken

- Check all calculations for error.
- Ensure that instrument performance is acceptable.
- Recalculate the data and/or reanalyze if either of the above checks reveal a problem
- If the recovery of any internal standard is less than 25 percent, calculate the S/N ratio of the internal standard If the S/N is > 10 and the estimated detection limits (EDL's) are less than the estimated minimum levels (EML's), report the data as is with qualifiers in the report and a discussion in the case narrative If the S/N is < 10 or the estimated

detection limits (EDL's) are greater than the estimated minimum levels (EML's), re-extract and re-analyze the sample If the ion chromatogram of the PFK lock mass m/z indicates ion suppression in the region where the internal standard elutes, reanalyzing the extract at up to a 1/10 dilution may improve the internal standard recovery. If the poor internal standard recovery is judged to be a result of sample matrix, a reduced portion of the sample may be re-extracted or additional clean-ups may be employed The decision to reanalyze or flag the data should be made in consultation with the client

9.2.2 Refer to the QC Program document (QA-003) for further details of the corrective actions.

9 3 Method Blanks

9.3.1 A laboratory method blank must be run along with each analytical batch of 20 or fewer samples The method blank consists of reagent water for aqueous samples, a clean solid matrix (sand or sodium sulfate) for solid samples, and corn or other vegetable oil or fish oil for tissue samples Analyze the blank immediately after analysis of the OPR to demonstrate freedom from contamination. The method blank should not contain any of the compounds of interest at a concentration above the estimated minimum level (EML) shown in Table 4.

9.3.2 Corrective action is required when compounds of interest are detected in the method blank above the EML Corrective action may include reanalysis of the method blank Contact the Project Manager to determine further corrective action At a minimum, all associated results are qualified with a B flag Re-extraction and reanalysis of all samples associated with a contaminated method blank is required if requested by the client or Project Manager Investigation of the source of the method blank contamination will be initiated before further samples are extracted.

9 3 3 The method blank must have acceptable internal standard recoveries If internal standard recoveries are not acceptable, the data must be evaluated to determine if the method blank has served the purpose of demonstrating that the analysis is free of contamination If internal standard recoveries are low and there are reportable analytes in the associated samples re-extraction of the blank and affected samples will normally be required Consultation with the client should take place

9.3 4 Refer to the QC Program document (QA-003) for further details of the corrective actions.

9 4 Instrument Blank

9.4.1 Instruments must be evaluated for contamination during each 12-hour analytical run This may be accomplished by analysis of a method blank. If

a method blank is not available, an instrument blank must be analyzed

9.4.2 An instrument blank consists of solvent with the internal standards and recovery standards added. It is evaluated in the same way as the method blank.

9.5 Ongoing Precision and Recovery (OPR) Sample - An ongoing precision and recovery (OPR) is prepared and analyzed with every batch of 20 samples All analytes must be within established control limits specified in Table 10 The OPR is spiked with the compounds listed in Table 5

9.5 1 If any analyte in the OPR is outside the control limits, corrective action must occur Corrective action may include re-extraction and reanalysis of the batch

- If the batch is not re-extracted and reanalyzed, the reasons for accepting the batch must be clearly presented in the project records and the report
- If re-extraction and reanalysis of the batch is not possible due to limited sample volume or other constraints the OPR is reported and the failure is documented in the project narrative.

9 6 QC Check Sample - Analyze the QC Check Sample (section 7.12.12) periodically to assure the accuracy of calibration standards and the overall reliability of the analytical process It is suggested that the QC Check Sample be analyzed at least annually.

10 Calibration and Standardization

10.1 Three types of calibration procedures are required The first type establishes retention times, relative retention times and relative retention time windows to be used during the subsequent calibrations and analyses. The second type, initial calibration, is required to establish response factors and is required before any samples are analyzed It may be required intermittently throughout sample analyses as dictated by the results of continuing calibration procedures described below The third type, continuing calibration, consists of analyzing the continuing calibration verification solution (VER). No samples are to be analyzed until acceptable calibration as described in sections 10 2 and 10.3 7 is demonstrated and documented

10 2 Retention Time Calibration

Retention time calibration is required if the retention time criteria cannot be met.

10.2 1 The absolute retention time of CB 209 must exceed 55 minutes Otherwise the GC temperature program must be adjusted and the test repeated until the requirement is met

10 2 2 **NOTE** When adjusting chromatographic conditions, the resolution requirements of sections 10 3 5 1 1 to10 3 5.1 3 must be maintained

10.2 3 Tune the instrument to meet the mass resolution and mass accuracy requirements of section 10 3.2 (for m/z 192 9888 m/z 230 98563, and m/z 280 98243). Document the resolution and accuracy

10.2 4 Analyze 2µL of each of the five individual PCB mixtures (section 7 12 1). Repeat the series twice more in succession to provide 3 runs of each mix It is not necessary to interrupt this analytical sequence to perform a 12-hour resolution check. Set the switch-points for the MID descriptors The switch-points must be set to insure that the first and last eluting isomer of each homolog group and the labeled internal standards are acquired properly Determine the average retention time of each PCB congener using the elution order information in Table 11

NOTE 1 PCB Mixture 5 (M-1668A-5) contains the first and last eluting isomer in each homolog group for the SPB-Octyl column (see Table 7).

NOTE 2 Laboratory data has indicated that the SPB-Octyl column can exhibit significant differences in performance from column to column. It has also been indicated that the column's performance can change significantly due to oxidation with subsequent changes in congener retention times and elution order The individual PCB mixtures should be analyzed whenever the column's performance or specific congeners retention times are in doubt.

10 2 5 Calculate the relative retention times for all native and labeled congeners, using their retention time references from Table 2 (RT Ref) Calculate the relative retention time for each run in which the congener and its retention time reference are present. (i e Three RRTs will be calculated for each native congener. Fifteen RRTs will be calculated for each internal standard) Use the calculated average retention times for all native and labeled congeners as the RT calibration source in the calculation software

10 2 6 Calculate the relative retention time window using the absolute retention time windows (RT Window) from Table 2

$$\text{RRT Limit Low} = \frac{RT_A - (RT_{WIN}/2)}{RT_{IS}} \quad \text{RRT Limit High} = \frac{RT_A + (RT_{WIN}/2)}{RT_{IS}}$$

Where

RT_A = Average retention time of analyte

RT_{IS} = Average retention time of RT reference.

RT_{WIN} = Absolute RT window in seconds from Table 2

10 2.7 A single pair of RRT limits is used for all congeners in coeluting set Use the RRT Limit Low that was calculated for the first eluting congener, and the RRT Limit High calculated for the last eluting congener (in the coelution set)

10.3 Initial Calibration

Initial calibration is required before any samples are analyzed for PCBs Initial calibration is also required if any continuing calibration (section 10.3 7) does not meet the required criteria in section 10.3.6

10.3 1 Prepare multi-level calibration standards containing the compounds and concentrations as specified in Table 4. Calibration standards should be stored at room temperature and preferably in amber vials Calibration standard solutions have an expiration date of ten (10) years from date of receipt unless otherwise specified by the manufacturer/supplier

10 3.2 Establish operating parameters for the GC/MS system (suggested operating conditions are displayed in Figure 1 and Figure 2) By using a PFK molecular leak, tune the instrument (see the appropriate instrument manufacturer's operating manual for tuning instructions) to meet the minimum resolving power of 10,000 (10 percent valley) at m/z 342 97924 (PFK) For each MID descriptor group monitor and record the mass resolution and exact m/z's of three reference peaks covering the mass range of the descriptor (see below) By using peak matching techniques verify that the deviation between the exact m/z and the theoretical m/z for each m/z monitored is less than 5 ppm Iteratively adjust operating parameters and tuning values until the mass resolution and mass accuracy criteria are met for each ion. Document the mass resolution and mass accuracy for each of MID group ion sets Because of the extensive mass range covered in each MID group, it may not be possible to maintain 10,000 resolution throughout the mass range of the MID group. Therefore, resolution must be greater than 8,000 throughout the mass range and must be greater than 10,000 in the center of the mass range for each MID group The minimum resolution of 10,000 must be met for m/z 342 97924

MID Group 1 PFK ions - 192 9888, 230.98563, 280 98243
MID Group 2 PFK ions - 268.98243, 292.98243, 380 97605
MID Group 3 PFK ions - 342 97924, 380.97605, 430.97285
MID Group 4 PFK ions - 404 97604, 442 97285, 530.96646

10 3 3 Inject a 2 µL aliquot of the CS0.5 calibration solution

10.3 3.1 Ion abundance ratios, minimum levels, and signal-to-noise ratios.

10 3 3 1.1 Measure the SICP areas for each congener or congener group, and compute the ion abundance ratios at the exact m/z's specified in Table 6 Compare the computed ratio to the theoretical ratio given in Table 9

10 3 3 1.2 All Toxic/LOC and labeled compounds in the CS0 5 standard must be within the QC limits in

Table 9 for their respective ion abundance ratios, otherwise, the mass spectrometer must be adjusted and this test repeated until the m/z ratios fall within the limits specified. If the adjustment alters the resolution of the mass spectrometer, resolution must be verified (Section 10.3.2) prior to repeat of the test

10 3 3 1 3 The peaks representing the CBs and labeled compounds in the CS0 5 calibration standard must have signal-to-noise ratios (S/N) ≥ 10; otherwise, the mass spectrometer must be adjusted and this test repeated until the minimum levels in Table 4 are met

10 3.3.1.4 An exception to the ion abundance ratio and signal to noise ratio requirements is the secondary ion for dichlorinated biphenyls (m/z 223 9974). High background from PFK fragments at 223.9974 results in noise levels which exceed 10% of the signal height at levels that are reliably quantifiable

10 3 4 Analyze 2µL of each of the other calibration standards.

10.3.4.1 Isomer specificity

10 3.4.1 1 Use the CS-3 calibration standard to evaluate column performance. The toxic isomers must be uniquely resolved from all other congeners. Isomers may be unresolved so long as they have the same TEF and response factor and so long as these unresolved isomers are uniquely resolved from all other congeners For example, the SPB-Octyl column achieves unique GC resolution of all Toxics except congeners with IUPAC numbers 156 and 157 This isomeric pair is uniquely resolved from all other congeners and these congeners have the same TEF and response factor.

10.3 4 1 2 Evaluate and document the percent valley between PCBs 34 and 23 The valley height must be less than 40 percent of the height of the shorter of the two peaks

10 3.4.1.3 Evaluate and document the percent valley between PCBs 187 and 182. The valley height must be less

than 40 percent of the height of the shorter of the two peaks

10 3 4 1.4 Column to column variations in the SPB-Octyl phase significantly affects the resolution of isomers 156 and 157 Document the percent valley between the isomers If the %valley is < 40% then calculate the isomers as non-coeluting peaks If the %valley is > 40% then calculate the isomers as co-eluting peaks

10 3 4 1.5 Classify each congener as resolved or as a member of a coelution set To be documented as resolved, the valleys between any two isomers must be less than 40 percent of the height of the shorter of the two adjacent peaks. Each member of a coelution set is designated with a qualifier in the format of CXXX, where XXX = the lowest numbered congener in the set. For example, if PCB 156 and PCB 157 coelute, qualify PCB 157 with "C156"

10 3.4 2 Calculate the RRF of each compound of interest (target analytes, coelution sets, internal standards, cleanup standards, and surrogate standards) vs the appropriate reference standard (as specified in Table 2) using the following equation;

$$RRF = \frac{As \times Cis}{Ais \times Cs}$$

where

As = sum of the areas of the quantitation ions of the compound of interest
Ais = sum of the areas of the quantitation ions of the appropriate reference standard
Cis = concentration of the appropriate reference standard
Cs = concentration of the compound of interest

NOTE When calculating the RRF for a coelution set, sum the areas of all isomers in the set. Use the resulting RRF for all congeners within the set

10.3 4 3 Calculate the mean relative response factor (mean RRF) and the percent relative standard deviation (RSD) of the relative response factors for each compound of interest in the six

calibration standard solutions using the following equations,

$$\overline{RRF}_{n=6} = \frac{1}{n} \times \sum_{i=1}^{n} RF_i$$

$$RSD_{n=6} = \sqrt{\frac{\sum_{i=1}^{n} \left(RF_i - \overline{RF}\right)^2}{n-1}} \times \frac{100}{\overline{RRF}}$$

10.3.5 Criteria for Acceptable Calibration - The criteria listed below for acceptable calibration must be met before sample analyses are performed If acceptable initial calibration is not achieved, identify the root cause, perform corrective action, and repeat the initial calibration. If the root cause can be traced to problems with an individual analysis within the calibration series, repeat the individual analysis and recalculate the percent relative standard deviation If the calibration is acceptable, document the problem and proceed, otherwise repeat the initial calibration.

10.3 5 1 The percent relative standard deviation (RSD) for the mean relative response factors for the unlabeled native analytes calculated by isotope dilution must not exceed 20 percent. The percent RSD for the mean relative response factors for the unlabeled native analytes calculated by internal standard must not exceed 35 percent. The percent RSD for the mean relative response factors for the labeled standards must not exceed 35 percent

10.3.6 Analyze 2µL of the Initial Calibration Verification (ICV) Standard in section 7.12.13 after completion of the ICAL prior to sample analysis Calculate the concentration of the ICV using the RRF's from the CS3 standard analyzed in section 10.3 4. Calculate the percent difference (%D) between the expected and the calculated ICV concentration using the following formula

$$\%D = \frac{\left(C_{Exp} - C_{Calc}\right)}{C_{Exp}} \times 100$$

Where
C_{Exp} = The expected concentration of the ICV Standard
C_{Calc} = The calculated concentration of the ICV Standard.

10 3 6.1 The criteria for acceptance of the ICV Standard are as follows·

10.3 6 2 The %D may not exceed ±35% for more than 4 of the native and labeled compounds

- The %D may not exceed ±50% for any native or labeled

compound

10.3.6 3 All data associated with compounds with percent differences exceeding ±35% must be reviewed before acceptance.

10 3 6.4 All data associated with compounds with percent differences exceeding ±35% shall be documented as an NCM Corrective action must be taken and may include the following

- Reanalyze the ICV Standard
- Replace and reanalyze the ICV Standard
- Evaluate the instrument performance
- Evaluate the Initial Calibration Standards

10.4 Continuing Calibration

10 4.1 Continuing calibration is performed at the beginning of a 12-hour period after successful mass resolution check

10.4 2 Document the mass resolution performance as specified in section 10.3 2 at both the beginning and end of the 12-hour period

10 4 3 Analyze 2µL of the Continuing Calibration Verification Standard (VER) Calculate the concentration (C) of the compounds of interest (target analytes, internal standards, cleanup standards, and surrogate standards) vs the appropriate reference standard (as specified in Table 2) using the following equation

$$C = \frac{As \times Cis}{Ais \times RRF}$$

where

As = sum of the areas of the quantitation ions of the compound of interest
Ais = sum of the areas of the quantitation ions of the appropriate reference standard
Cis = concentration of the appropriate reference standard
RRF=mean relative response factor from section 10 3 5.3

10 4 4 Calculate the concentrations as percentages of the test concentrations and compare them to the limits specified in Table 10 using the following equation

$$C_{ver}\% = \frac{C_{ver}}{C_{test}} \times 100$$

where

C_{ve} = the concentration of the VER standard calculated in section 10 4 3
C_{tcs} = the test concentration of the VER standard listed in Table 6

10 4.5 Criteria for Acceptable Calibration - The criteria listed below for acceptable calibration must be met before sample analyses are performed. If the acceptance criteria are met the calibration is deemed to be in control and the RRF's generated from the initial calibration are used to quantify samples If acceptable calibration is not achieved, identify the root cause, perform corrective action, and repeat the continuing calibration. If a second consecutive attempt at a continuing calibration fails, two consecutive calibrations must meet the criteria, or an initial calibration must be run before proceeding with client samples

10.4 5 1 The ion abundance ratios of the peaks representing the Toxics/LOCs and labeled standards must be within the control limits specified in Table 9

10 4 5.2 The S/N for the GC signals present in every SICP (including those for labeled standards) must be ≥ 10

10 4 5.3 The concentrations calculated as percentages of test concentrations (Toxic and LOC congeners, internal standards, cleanup standards, and surrogate standards) must be within the limits in Table 10.

10.4 5.4 For Toxic and LOC congeners, as listed in the first section of Table 10, the percent of the calculated concentration relative to the test concentration must be within 70-130%

10 4 5.5 For non-Toxics/LOCs the calculated concentrations must be within 40-160% of the test concentrations.

10.4 5.5.1 If the non-Toxic/LOC calculated concentration is within 70-130% of the test concentration, then the ICAL RF for that congener is used. If the calculated concentration is not within 70-130% but is within 40-160%, then calculate the RF from the VER standard for that congener and use it to calculate any associated samples run during that 12 hour shift

10.4 5.6 The absolute retention times (RT) of the labeled internal standards must be within ±15 seconds of the retention times obtained during initial calibration

10.4 5 7 The relative retention times (RRT) of the Toxics/LOC congeners must be within their respective RRT limits generated in the retention time calibration in section 10 2 6

10 4.5 7 1 If the RRT's or RT's are not within the limits above, the GC may not be performing properly However, routine column maintenance may include removing short amounts of the beginning of the column when active sites or non-volatile compounds in sample extracts cause poor chromatography and loss of specificity. Shortening of the column can cause the RRT's or RT's to fall outside the above limits

10.4 5 7 2 When the RRT of any compound or the RT of any internal standard is not within the above limits corrective action must be taken If the GC is not performing properly, correct the problem and repeat the test If the GC is performing properly but the RRT's or RT's have changed due to routine column maintenance, adjust the GC or replace the GC column, then repeat the test or repeat the retention time calibration

10 4.5.8 Evaluate and document the percent valley between PCBs 34 and 23 The valley height must be less than 40 percent of the height of the shorter of the two peaks

10 4.5 9 Evaluate and document the percent valley between PCBs 187 and 182 The valley height must be less than 40 percent of the height of the shorter of the two peaks

10 4 5 10 If PCBs 156 and 157 have been classified as uniquely resolved at the most recent initial calibration, the valley between the two must be less than or equal to 50% the lower of the two peaks If this cannot be demonstrated, the resolution must be reestablished, or a new initial calibration must be analyzed.

10 4 6 Daily calibration must be performed every 12 hours of instrument operation. The 12-hour shift begins with the documentation of the mass resolution followed by the injection of the Continuing Calibration Standard (VER)

11 Procedure

11 1 One time procedural variations are allowed only if deemed necessary in the professional judgement of supervision to accommodate variations in sample matrix, radioactivity, chemistry, sample size, or other parameters. Any variations in the procedure, except those specified by project specific instructions, shall be completely documented using a Nonconformance Memo and approved by a Technical Specialist, Project Manager, and QA Manager If contractually required, the client shall be notified

Any unauthorized deviations from this procedure must also be documented as a nonconformance, with a cause and corrective action described

11 2 Samples are extracted by the following procedures depending upon sample matrix Water samples are prepared by separatory funnel liquid/liquid extraction Solid samples including soils, sediments, tissues, XAD tubes, PUF cartridges, and solid waste materials are prepared by Soxhlet extraction Non-aqueous liquid wastes and organic solvents are prepared by waste dilution techniques

NOTE Samples should be removed from the refrigerator several hours before extraction and allowed to come to room temperature before measuring the volume or performing the extraction

11 3 Aqueous Samples (samples containing 1% solids or less.)

11 3 1 Refer to Knoxville SOP, KNOX-QA-0002, current revision, for information on glassware cleaning procedures for extraction glassware

11 3 2 For water samples that required extremely low detection limits, only use the glassware designated for those water samples

11 3.3 Place separatory funnels, one for each sample, in the rings attached to the latticework set up in the hood

11 3 4 Place the 500 mL round bottom flask directly beneath the separatory funnel

11 3 5 Plug the glass funnel with glass wool and pour in some sodium sulfate (about 1 to 2 inches from the top). Rinse the sodium sulfate with methylene chloride. After the funnel stops dripping, place the funnel on top of the flask that is fitted with a paper clip to aid in filtering

11.3.6 Inspect the sample for solids or biphasic sample characteristics If either condition exists, consult the project manager for further instructions Mark the level of the sample on the sample bottle in order to measure the volume later and carefully add the sample to the separatory funnel, taking care not to spill any sample For the method blank and the OPR, use a 1000 mL graduated cylinder to measure 1000 mL of reagent water

11.3.7 Verify the specified final volume of the extract If the standard 20 µL is specified, use low-level spiking solutions Add 1 mL of the low-level ^{13}C labeled internal standard spiking solution, specified in section 7.11 8, to the sample For the IPR or OPR, add 1 mL of the low-level PAR PCB Spiking Solution as specified in section 7.11 7 Record the amount of spike used and the spike standard number in the standards logbook and on the benchsheet

11 3.8 Add 60 mL of methylene chloride to the sample bottle and shake Then add the methylene chloride to the separatory funnel Add 60 mL of methylene chloride to the method blank, LCS/OPR , and LCSD (if required) as well

11 3 9 Secure the separatory funnel with the rotator retaining straps and rotate for 2

minutes.

CAUTION Care should be used while performing this operation Vent the separatory funnel frequently Goggles may be worn when performing this procedure

11 3 10 Allow the water and the methylene chloride to separate for 10 minutes. If it is not separated after 10 minutes, try to break up the emulsion by gently swirling the sample or tilting the separatory funnel on its side

11 3.11 Drain the methylene chloride from the separatory funnel into the glass funnel that is filled with sodium sulfate, allowing the extract to drip into the round bottom flask. Be careful not to allow water to escape the separatory funnel or the sodium sulfate will harden and block the flow of the extract. When an emulsion is present, do not drain the emulsion until the third methylene chloride shake has been completed If at least 10 minutes has elapsed and other ways of breaking up or reducing the size of the emulsion have failed the following steps may be tried to reduce the impact of the emulsion on the sodium sulfate

11 3.11 1 Place a large piece of pre-cleaned glass wool in the funnel containing the sodium sulfate.

11.3.11 2 Spread the glass wool out, covering the entire surface of the sodium sulfate to about a depth of about 5 to 10mm If the emulsion is hard to break up and persistent, a small, additional layer of sodium sulfate may be added on top of the glass wool

11 3 11 3 Drain the solvent and emulsion layer into the funnel being careful to drain no more than 60 mL of volume if a clear phase layer cannot be determined

11 3 11 4 If this procedure is used the funnel should be rinsed with an extra 30ml of methylene chloride to ensure all analytes are rinsed into the round bottom flask after the third portion of methylene chloride has drained through the sodium sulfate in section 11 3.12.

11 3.12 Repeat steps 11.3 8 through 11 3 11 two more times

11 3 13 After the third methylene chloride portion has filtered through the sodium sulfate, rinse the funnel with approximately 40 mL of methylene chloride

11 3 14 Remove the separatory funnel from the hood and pour the extracted water into the extracted waters waste carboy

11 3 15 Fill the empty sample bottle to the marked level with tap water Pour the tap water into a 1000 mL graduated cylinder. Record the volume of sample used on the benchsheet

11.3 16 Remove the glass funnel from the top of the round bottom flask

11 3 17 Place a 3-ball Snyder column on the 500mL round bottom flask. Pre-wet the Snyder column with 1 mL of hexane and concentrate the extract to approximately 10mL Add approximately 60mL of hexane and concentrated down to approximately 10mL.

11 3 18 Transfer the extract into a 40mL vial, rinsing the 500mL flask 3 times with 3mL of hexane. Add the rinsings to the 40mL vial

11.3 19 Place the 40mL vials into the N-EVAP concentration device and reduce the volume to approximately 0 5mL Do not allow the sample to go to dryness at any time If an additional solvent exchange is needed, add 5mL of hexane and swirl the vial. Reduce the volume of hexane to approximately 0 5mL again to complete the solvent exchange Adjust the final volume of the extract with hexane to 15mL for acid cleanup or 2mL for column cleanup If the sample exhibits poor solubility in hexane, add approximately 1mL of benzene with a pipette to the vial to aid in dissolving the sample Proceed to section 11 9

11.4 Solid Sample Screening and Assignment of Sample Preparation Protocols

11 4.1 Because of the sensitivity of method 1668, it is necessary to screen all solid and non-aqueous liquids before extracting to prevent instrument saturation and/or contamination

11 4 2 Tare a 40 mL VOA vial

11 4 3 Add a 1 +/- 0.1 g sub-sample in accordance with KNOX-QA-0006

11 4 4 Add 1 0 mL of 8082 surrogate mix

11 4 5 Add 9 mL of hexane

11 4.6 Cap tightly, and secure on a platform shaker table

11 4.7 Shake for 1 hour, minimum.

11 4.8 Filter, using a small funnel fitted with a GF filter paper and a small amount of Sodium Sulfate into a 12ml vial marked at 10.0 ml

11 4.9 If extract is colored in any way after filtering, transfer approximately 4ml into a fresh 12ml vial, add approximately 4ml of Sulfuric Acid, cap tightly, and shake the vial for 30 seconds.

11.4 10 Mark the vial with the work-order ID followed by "AW" and deliver both extracts to the GC analyst.

11.4 11 Perform a calibration check on the screening instrument If the %D for both Aroclors and Surrogates is within +/-30 percent from the initial calibration, analyze the sample extracts within 12 hours of the calibration check.

11 4.12 If no pattern and no prominent peaks are present at the 1 0 ppb reporting limit, process the sample using Protocol 1

11.4 13 If an Aroclor-like pattern is observed, calculate the estimated concentration of the largest peak expected in the determinative analysis, and assign a protocol. Use the spreadsheet named "PCB Protocol Selection" found at knxsvr1\msoffice\templates\tlknxsog to perform the following steps

11 4.13 1 Calculate the concentration of the most prominent technical mixture, by comparison to Aroclor standards (Enter the Aroclor sample concentration on the spreadsheet, in ppb) Circle the amount entered on the GC hardcopy result

11.4 13 2 Correct the concentration for surrogate recovery. (Enter the average, or selected recovery in the spreadsheet.)

11 4 13 3 Multiply the concentration by 0 1 (the spreadsheet default) to correct for the weight percent of the largest single congener in an Aroclor mix (This is done by the spreadsheet.) This value may be changed to represent special cases, such as altered patterns, or unusual technical mixtures, but documentation of the rationale must accompany the spreadsheet

11.4 13.4 Multiply the concentration by 4 to account for single-peak coelutions (This is done by the spreadsheet).

11 4 13 5 The resulting concentration is used as the estimate for the largest peak expected in the determinative analysis Assign the protocol for each sample according to Table 12

11.4.13 6 Have an independent analyst review the data entry, and protocol assignments, initial and date the spreadsheet. Attach the spreadsheet and supporting GC data to the bench worksheets.

11 4 13.7 Adjust the sample volume, spiking volume, split ratio, final volume value, and bench dilution to reflect the selected protocol

11.5 Solid Sample Extraction (samples containing more than 1% solids.)

11 5 1 Sample Pretreatment

11.5 1.1 Tissue Samples – This section uses protocol 1 as an example. If another protocol has been assigned, the sample amount extracted, spike volumes and percent of extract used is modified based on section 11 4 12

11.5.1.1 1 If the sample matrix is tissue and has not been homogenized prior to sample receipt, the entire sample is blended to provide a homogeneous

sample

11 5 1 1.2 Cut tissue into pieces of a uniform size (approximately 1 inch square) Homogenize the tissue sample in a laboratory blender

11.5 1 1 3 Weigh out 10 grams of the homogenized tissue sample Add the 10 g sample along with 20 g of sodium sulfate to a laboratory blender Blend the tissue/sodium sulfate mixture, while adding dry ice as necessary, to achieve a powder like consistency

11.5 1 1 4 Record the sample and weight on the sample prep sheet

11 6 Soxhlet Extraction This section uses protocol 1 as an example If another protocol has been assigned, the sample amount extracted, spike volumes and percent of extract used is modified based on section 11 4 12

11 6.1 Prepare and label the required number of Soxhlet systems.

11.6 1 1 The Soxhlet is prepared by cleaning and rinsing per section 5, charging the boiling flask with solvent, assembling the components, and precleaning by reflux for 4 hours before use

11 6.1 2 Transfer a well-mixed 10 g aliquot of the solid sample into a glass microfiber extraction thimble (+/- 0.05 grams) If specified in client requirements or a quality assurance summary by the project manager, adjust the amount weighed to achieve 10 g dry weight. Record the sample and weight on the sample prep sheet If the entire sample is to be analyzed (XAD, filters, etc), transfer the entire sample to the Soxhlet extractor. If an extraction thimble is not being used, sandwich the sample between glass wool plugs in the extractor Small portions of acetone may be used to aid in the transfer of XAD

11.6.1.3 Sand, baked at 450° C, is used for the blank and OPR. Transfer 10g of sand into an extraction thimble Record the sample weight on the sample prep sheet

11.6 1 3.1 If the matrix is tissue samples, sodium sulfate and corn oil or vegetable oil or fish oil) is used for the blank and OPR. Transfer 20 grams of the sodium sulfate and several small chips of dry ice into an extraction thimble. Record the sample weight on the sample prep sheet.

11 6 1.4 Spike each sample with 1 mL of the internal standard solution (see section 7.12 8) and add a small amount of glass wool to the top of the extraction thimble

11.6 1 5 Spike the OPR with 1 mL of the native spiking solutions (see section 7 12 7) prior to adding the glass wool

11 6 1 6 Pour approximately 350 mL of the extraction solvent into a 500 mL round bottom flask Place the flask in the heating mantle Add about 10-15 boiling beads and several Teflon™ boiling chips.

NOTE· Hexane/Acetone is the preferred solvent to be used for extraction but in certain cases (i e XAD extraction) MeCl2 may be a better choice

11 6 1 7 Place the extraction thimble in the glass Soxhlet extractor.

11 6 1 8 Assemble the Soxhlet system and secure to the lab supports

11.6.1 9 Adjust the temperature of the heating mantle to bring the solvent in the round bottom flask to a rolling boil There should be a steady drip from the condensers so that the solvent should completely cycle at least 5 times an hour.

11 6 1.10 Soxhlet extract the sample in the above manner for 16 hours

11 6 1 11 Turn off the heating mantle and allow the Soxhlet apparatus to cool

11 6.1 12 Remove the condensers and allow the Soxhlet extractor chamber to empty, then remove the Soxhlet extractor from the 500 mL round bottom flask

Note If the samples appear to have water layer or moisture, dry the extract by filtering it through a sodium sulfate filled funnel

11 6 1.13 Place a 3-ball Snyder column on the 500 mL round bottom flask. Pre-wet the Snyder column with 1 mL of hexane and concentrate the extract to approximately 10 mL If extracts are in methylene chloride, add approximately 60 mL of hexane and concentrate down to approximately 10 mL.

11 6 1 14 Transfer the extract into a 40 mL vial, rinsing the 500 mL flask 3 times with 3 mL of hexane. Add the rinsings to the 40 mL vial

11 6.1 15 Place the 40 mL vials into the N-EVAP concentration device and reduce the volume to approximately 0 5 mL Do not allow the sample to go to dryness at any time. If an additional solvent exchange is needed, add 5 mL of hexane and swirl the vial

Reduce the volume of hexane to approximately 0 5 mL again to complete the solvent exchange Adjust the final volume of the extract with hexane to 15 mL for acid cleanup or 2 mL for column cleanup If the sample exhibits poor solubility in hexane, add approximately 1 mL of benzene with a pipette to the vial to aid in dissolving the sample. Proceed to section 11 9

11 7 Waste Sample Extraction

11 7 1 Organic wastes, oil, solids that will dissolve in solvent, and non-aqueous sludge samples may be prepared by the waste dilution technique.

11.7 2 Add an appropriate amount of sample (e g. 1.0g) to a 40 mL VOA vial Spike the sample with 1 mL of the internal standard spiking solution (see section 7 12 8) Record the spike solution number and the volume spiked. Add hexane to bring the volume to 15 mL. If the sample exhibits poor solubility in hexane, add approximately 1 mL of benzene with a pipette to the vial to aid in dissolving the sample. Proceed to section 11 9.

11 7 3 Record the weights and volumes used on the laboratory bench sheets.

11 8 Macro Extract Concentration by Rapid-Vap

11 8.1 Preheat the unit to the appropriate temperature for the solvent used in the extraction

11.8 2 Set the operating parameters on the programmer. For example, if there is 300 ml of a methylene chloride extract, the following parameters may be used and should be adjusted as needed

Temperature	30 °C
Vortex Speed	30%, to be increased at a later time
Nitrogen	7-9 psi
Timer Set	30 minutes

11 8 3 Place 600 ml concentrator tubes containing the extract in the Rapid-Vap Begin concentrating the extract, adjust the vortex speed for the proper rate of concentration.

11 8 4 When the extract has been concentrated to less than 20 mL, add approximately 60 mL of hexane Concentrate the extract to a final volume of approximately 2 ml Shut off the nitrogen flow and turn off the Rapid-Vap or remove the 600 mL concentrator tube to prevent further concentration.

11.8 5 Transfer the extract to a 40 ml vial with a 9" disposable pipet, rinsing the sample tube three times with 3 ml of hexane Reduce the volume in the 40 mL vial using the N-Evap to approximately 2 ml and proceed to extract cleanup in section 11 9 If no additional cleanups are to be performed

continue with the following steps to dry the extract.

11 8.6 Prepare a small funnel by putting a small plug of pre-cleaned glass wool to the bottom of the funnel and adding a layer of sodium sulfate on top of the glass wool

11 8 7 Pipet the extract from the Rapi-Vap concentrator tube and through the funnel containing the sodium sulfate into a 40ml vial.

11 8 8 Rinse the concentrator tube 3 times with approximately 3ml of hexane for each rinse. The sodium sulfate funnel then should be rinsed with an additional 2ml of hexane. Proceed to micro concentration in section 11 9 5.10 to 11 9.5.12

11.9 Extract Cleanup

11.9 1 If the sample is to be analyzed for PCB's only, use the entire extract for the cleanup procedures. If additional analyses (example Dioxins, Pesticides, PAH's, or Semi-volatiles) are to be performed on the extract, split the extract in equal portions for each analysis Label each split portion with the sample ID and the analysis Proceed with cleanup on the portion labeled for PCB analysis.

11 9 2 Spike each sample extract with 1 mL of the cleanup standard solution (see section 7 12.9)

11 9 3 Acid Cleanup

11 9.3 1 The acid cleanup is employed when sample extracts are colored and/or oily in appearance

11 9 3.2 Slowly add 15 mL of concentrated sulfuric acid to the 15 mL extract in the 40 mL vial and shake for 30 seconds. If an emulsion forms, discontinue shaking Vent the vial frequently while shaking Let the vial stand for a minimum of 10 minutes and remove the aqueous layer with a glass pipette. Repeat the acid washing until no color is visible in the acid layer (perform a maximum of four acid washings)

11.9.3 3 Add 15 mL 5% (w/v) aqueous sodium chloride to the vial and gently shake for 30 seconds Vent the vial frequently while shaking Let the vial stand for 10 minutes and remove the aqueous layer with a glass pipet. Dry the hexane extract by adding 1 to 2 grams of sodium sulfate and swirling the vial

11 9 3.4 Reduce the extract volume to approximately 2 ml

11 9 3 5 Proceed to silica gel or Florisil cleanup

11.9 4 Silica Gel Column Cleanup

11 9 4.1 Prepare 20mm columns for each extract by placing a large ball of glass wool in the bottom of each column and then solvent rinsing. Rinse each column in the following order, acetone, toluene, methylene chloride, and hexane

11 9 4 2 Mark the level of which the column packings will be added with a marking pen starting at the top of the glass wool plug and proceed from bottom to the top.

11.9.4 3 12mm- 2g of 3 3% deactivated silica gel

11.9.4 4 16mm- 4g of acidic silica gel

11.9.4 5 12mm- 2g of 3 3% deactivated silica gel

11.9 4 6 10mm- Sodium Sulfate

11 9 4 7 Place a 600mL concentrator tub (500mL for round bottom Flask for water samples) underneath each column.

11 9 4.8 Add the column packings in the order listed in section 11.9 4.2 to the column, tapping the column with a marking pen to settle the contents to prevent channeling Once the column has been packed, add 30mL of hexane to pre-elute the column Do not collect the pre-eluted hexane

11.9.4 9 As the level of hexane reaches the top of the packing in the column, transfer the sample extract into the column. Rinse the extract vial with 1 5mL of hexane and add the rinsing into the column Repeat the rinse 2 more times

11 9.4.10 As the solvent level from the last rinse reaches the top of the column packing, add 70mL of hexane (via a solvent bottle top dispenser) into the silica gel column to elute the PCB's into the collection flask.

11 9 4 11 Concentrate the extract to approximately 10mL. Transfer the extract to a 40mL vial, rinsing the round bottom flask or concentrator tube with 1 5mL of hexane and add the rinsing to the 40mL vial Repeat the rinse 2 more times

11.9 4 12 Proceed to additional cleanups found in section 11.9 5

11.9 5 Florisil Column Cleanup

11 9 5 1 Place a small ball of glass wool in the bottom of a glass chromatography column

11 9.5.2 Attach the column to the lab support in the hood

11.9 5 3 Pack the Florisil column with the following layers. Add the

column packing while tapping the column to settle the contents to prevent channeling The order of the layers is from bottom to top.

11.9.5 3 1 Layer 1 - 8 cm (15 g) of Florisil.

11 9 5 3 2 Layer 2 - 2 cm (2 g) of sodium sulfate.

11.9 5 4 Place a Rapid-Vap concentrator tube for solids, or a round bottom flask for water, under each column to catch the solvents as they filter through the column

11.9 5 5 Pour 70 mL of 6% diethyl ether in hexane (v/v) into a graduate cylinder and save for later use in the procedure (one graduate cylinder for each column)

11.9 5 6 Wet the column with hexane to remove any air bubbles and discard this hexane into the solvent waste Take care not to let the column drip dry at any time during this procedure.

11.9 5 7 Just before the level of hexane reaches the top of the sodium sulfate layer, transfer the sample extract into the top of the column Rinse the vial 3 times with 1 5 mL of hexane and add these rinsings to the column

11.9 5.8 Just before the solvent level reaches the top of the sodium sulfate, pour the 70 mL of 6% diethyl ether in hexane (v/v) into the top of the column and allow this to drip through the column and into the concentrator tube or round bottom flask.

11 9 5.9 Reduce the volume as described in section 11.6.1 12 &13 or 11 8 to approximately 10mL Transfer the extract to a 40mL vial, rinsing the concentrator flask 3 times with 1 5mL of hexane each time. Add the rinsings to the 40mL vial. Place the 40 mL vial containing the extract in the N-EVAP concentration apparatus and reduce the solvent volume to approximately 0.3 ml

11.9.5 10 Transfer the concentrated extract into a 1 1 mL tapered mini-vial, rinsing 2 times with small amounts of hexane Label the mini vial with the sample ID

11.9 5 11 For aqueous samples, add 20 µL of the recovery standard solution (see section 7 12 11) to the mini-vial before transferring the extract into the minivial Then reduce the extract volume back down to 20 µL. Take the mini-vial to the GC/MS lab for analysis.

11 9 5 12 For all other samples, add 100 µL of the recovery standard solution (see section 7.12.11) to the mini-vial before

transferring the extract into the minivial Then reduce the extract volume back down to 100 µL If the extract has been split for other analyses, adjust the final volumes and recovery standard amounts by the split factor to achieve a comparable analysis sensitivity (example· Extract split in half for PCB and Dioxin analysis, use 50 µL of recovery standard solution and concentrate to a final volume of 50 µL)

11 9.5 12 1 If the sample has had a protocol other than protocol 1 assigned, dilute the extract with nonane to achieve the dilution factor shown in Table 12 Take the mini-vial to the GC/MS lab for analysis

11.9 6 Sulfur clean-up by Tetrabutylammonium (TBA)

11 9.6 1 Bring the sample extract to between 5 ml and 10 ml in a 40 ml vial. Caution Do not let the extract volume drop below 1 ml, as loss of analytes may occur

11.9 6 2 Add 1 0 ml of TBA sulfite reagent and 2 0 ml of 2-propanol to the vial containing the extract Shake the vial vigorously for 1 minute

11 9 6.3 If the extract is colorless or the initial color is unchanged and if clear crystals (precipitated sodium sulfite) are observed, sufficient sodium sulfite is present. If the precipitated sodium sulfite disappears, add more sodium sulfite in approximately 0 10 g portions until a solid residue remains after repeated shaking

11 9 6 4 Add 5ml of reagent water and shake the vial for 1 minute Allow the layers to separate (at least 5 minutes) Filter the hexane layer (the top layer) through a small funnel filled with sodium sulfate that has been pre-wetted with hexane and into a clean 40 ml vial

11.9 6.5 Add 2 ml of fresh hexane to the clean-up vial. Shake for 30 seconds and allow the layers to separate again. Filter the hexane portion through the sodium sulfate funnel and into the clean 40ml vial

11 9.6.6 Repeat step 11 9 6 5 once

11 9.6.7 Rinse the sodium sulfate funnel with 2ml of hexane.

11 9 6 8 Proceed to section 11 9.5 10 thru 11 9.5 12 for final concentration and transfer to a mini-vial

11.10 Sample Analysis

11 10.1 Analyze the sample extracts under the same instrument operating conditions used to perform the instrument calibrations Inject 2 µL into the GC/MS and acquire data beginning at 8 minutes and ending after decachlorobiphenyl has eluted from the column

11 10 2 Record analysis information in the instrument logbook. The following information is required

Date of analysis
Time of analysis
Instrument data system filename
Analyst
Lab sample identification

Additional information may be recorded in the logbook if necessary

11.10.3 Generate integrated ion chromatograms for the masses listed in Table 8 that encompass the expected retention windows of the PCB homologous series

11 10 4 Generate a reduced peak list file from the integrations show in the ion chromatograms

11 10.5 Load the reduced peak list file into the calculation software.

11.10.6 The RTs of the unambiguous labeled congeners (RT Markers) are used to calculate a least squares best fit regression for retention times compared to those of the retention time calibration

11 10.7 The resulting regression is used to calculate predicted retention times for target analytes These predicted retention times are used by the software to identify candidate peaks for targets

11 10 8 The analyst reviews the peaks identified as targets, and determines whether to accept the identification This determination is made by evaluating the delta values, (RT shift from predicted), knowledge of peak patterns and observations of localized shifting

11.10 9 An RRT window is calculated by multiplying the RRT Limit High and the RRT Limit Low by the retention time of the designated RT reference. The software applies a qualitative flag to each peak identified as a target that has a RRT outside the RRT window.

11 11 Troubleshooting Guide

11.11 1 HRGC/HRMS Troubleshooting

- Perform the instrument's leak check Evaluate the air spectrum. Mass 28 should be less than 5 times mass 69. If the air spectrum is not acceptable, replace transfer line ferrule and/or pump out PFK

reservoir

- Check the voltage on the 5V power supply If voltage is not reading 5V, adjust voltage to read 5V.
- Check daily calibration standard Evaluate the signal to noise (S/N), examine peak shape/chromatography, and evaluate response factors Refer to specific SOP's requirements and acceptance criteria for all natives and internal standards. If daily calibration is not acceptable , perform the following troubleshooting options as needed and re-analyze a daily CS3 calibration standard·

  a) Replace the inlet seal and clean the injection port body with methanol to improve response factor

  b.) Perform column/injector port maintenance and/or retune the instrument to resolve chromatography/resolution, signal to noise issues

  c.) Perform a gain test on the electron multiplier.

  d.) Adjust the tuning parameters of the instrumentation to achieve optimum sensitivity and peak shape

  e.) Evaluate carryover from sample analyses. If carryover or contamination is suspected, run solvent rinses (nonane) under MID to evaluate the contamination.

  f) When troubleshooting cannot resolve an instrument problem, a manufacture's service engineer may be consulted for possible solution, or called onsite for diagnosis/repair

12 Data Analysis and Calculations

12 1 Qualitative identification criteria for PCBs.

For a gas chromatographic peak to be identified as a PCB, it must meet all of the following criteria

12.1.1 The signals for the two exact m/z's in Table 8 must be present and must maximize within ±2 seconds.

12.1.2 The signal to noise ratio (S/N) for each GC peak at each exact m/z must be greater than or equal to (≥) 2 5. (This requirement does not apply to the secondary ion for dichlorinated biphenyls [m/z 223 9974] High background from PFK fragments at 223 9974 results in noise levels which exceed 10% of the signal height at levels that are reliably quantifiable)

12 1.3 The ratio of the integrated areas of the two exact m/z's specified in Table 8 must be within the limits in Table 9 Alternately, the ratios may be within

±15% of the ratio in the midpoint (CS3) calibration or calibration verification (VER), whichever is most recent

12 1 4 The relative retention time of the peak for a CB must be within the RRT QC limits calculated in section 10 2 5

NOTE For native CBs determined by internal standard quantitation, a given CB congener may fall within more than one RT window and be misidentified unless the RRT windows are made very narrow, as in Table 2 Therefore, consistency of the RT and RRT with other congeners and the labeled compounds may be required for rigorous congener identification Retention time regression analysis may be employed for this purpose.

12.1.5 If identification is ambiguous, (i e some, but not all of the identification criteria are met for a congener) an experienced analyst must determine the presence or absence of the congener

12.2 Quantitation for PCB's

12 2 1 Calculate the Internal Standard Recoveries (Ris) relative to the Recovery Standard according to the following equation

$$Ris = \frac{Ais \times Qrs}{Ars \times RRFis \times Qis} \times 100\%$$

where

Ais = sum of the areas of the quantitation ions of the appropriate internal standard
Ars = sum of the areas of the quantitation ions of the recovery standard
Qrs = ng of recovery standard added to extract
Qis = ng of internal standard added to sample
RRFis= mean relative response factor of internal standard obtained during initial calibration

NOTE In some situations, such as source testing, the extract is split for multiple analyses In this case, Qrs must be correctly calculated to account for the splitting of extracts before the recovery standard was added

$$Qrs = Qrss \times Split$$

where

Qrs = ng of recovery standard added to extract
Qrss = ng of recovery standard added to the split portion of the extract
Split = split ratio of the extract

12 2 2 Calculate the concentration of individual PCBs according to the following

equation

$$\text{Concentration} = \frac{A_s \times Q_{is}}{A_{is} \times RRF \times W \times S}$$

where

A_s = sum of the areas of the quantitation ions of the compound of interest

A_{is} = sum of the areas of the quantitation ions of the appropriate internal standard

Q_{is} = ng of internal standard added to sample

RRF = mean relative response factor of compound obtained during initial calibration

W = amount of sample extracted (grams or liters)

S = decimal expression of solids (optional, if results are requested to be reported on dry weight basis)

12 2 3 If reporting results for Total Homolog Groups, calculate the total concentration of all isomers within each homolog group by summing the concentrations of the individual PCB isomers within that homolog group

12 2.4 If no peaks are present in the region of the ion chromatogram where the compounds of interest are expected to elute, calculate the estimated detection limit (EDL) for that compound according to the following equation

$$EDL = \frac{N \times 2.5 \times Q_{is}}{H_{is} \times RRF \times W \times S}$$

where

N = sum of peak to peak noise of quantitation ion signals in the region of the ion chromatogram where the compound of interest is expected to elute

H_{is} = sum of peak heights of quantitation ions for appropriate internal standard

Q_{is} = ng of internal standard added to sample

RRF = mean relative response factor of compound obtained during initial calibration

W = amount of sample extracted (grams or liters)

S = decimal expression of solids (optional, if results are requested to be reported on dry weight basis Note do not use if results are to be reported by QuantIMS since it performs all necessary moisture corrections)

12 2 5 If peaks are present in the region of the ion chromatogram which do not meet the qualitative criteria listed in section 12.1, calculate an Estimated Maximum Possible Concentration (EMPC). Use the equation in section

12 2 2, except that As should represent the sum of the area under the one peak and of the other peak area calculated using the theoretical chlorine isotope ratio. The peak selected to calculate the theoretical area should be the one which gives the lower of the two possible results (i e. the EMPC will always be lower than the result calculated from the uncorrected areas)

12 2 6 If the concentration in the final extract of any PCB isomer exceeds the upper method calibration limits, a dilution of the extract or a re-extraction of a smaller portion of the sample must be performed. Dilutions of up to 1/10 may be performed on the extract. If compound concentrations exceeding the calibration range cannot be brought within the calibration range by a 1/10 dilution, extraction of a smaller aliquot of sample may be performed or the sample may be analyzed by a more appropriate analytical technique such as HRGC/LRMS. Consultation with the client should occur before any re-extraction is performed The lab may report the measured concentration and indicate that the value exceeds the calibration limit by flagging the results with "E" Consultation with the client should occur before compounds are reported which exceed the calibration range.

12 3 The estimated minimum level (EML) is defined as the lowest concentration at which an analyte can be measured reliably with common laboratory interferences present assuming a sample is extracted at the recommended weight or volume and is carried through all normal extraction and analysis procedures The EML's for different matrices and extract volumes are listed in Table 4 Deviations from the extraction amounts or final volumes listed will result in corresponding changes in the actual sample ML

12 4 Flag all compound results in the sample which are below the estimated minimum level with a "J" qualifier.

12 5 Flag all compound results in the sample which were detected in the method blank with a "B" qualifier

12.6 Flag all compound results in the sample which are above the upper calibration limit with an "E" qualifier

12 7 Flag all compound results in the sample which are "Estimated Maximum Possible Concentrations" with a "Q" qualifier.

12.8 Flag compound results in the sample that may contain co-eluting compounds with a "C" qualifier

12 8 1 Flag congeners known to coelute with a higher numbered congener with a "C" qualifier.

12.8 2 Flag congeners that coelute with a lower numbered congener with a "Cx" qualifier where x is the CAS PCB number of the lowest numbered congener in the coeluting group

12 9 Flag compound results in the sample that may be affected by ion suppression with a "S" qualifier When ion suppression of a PFK trace occurs at greater than or equal to 20% of full scale on both the lock mass and QC mass traces, and when the suppression is sustained for greater than 4 seconds, the suppression must be evaluated to determine which, if any, PCB congeners co-elute with the suppression Congeners that are determined to co-elute with the suppression are flagged with an "S" qualifier

12.10 Data review

12 10 1 Refer to Figure 3 for an example data review checklists used to perform and document the review of the data Using the data review checklist, the analyst also creates a narrative which includes any qualifications of the sample data

12.10 2 The analyst who performs the initial data calculations must initial and date the front chromatogram of the raw data package to document that they have performed the qualitative and quantitative analysis on the sample data.

12 10.3 A second analyst must verify all qualitative peak identifications If discrepancies are found, the data must be returned to the analyst who performed the initial peak identification for resolution

12.10 4 A second analyst must check all hand calculation and data entry into calculation programs, databases, or spreadsheets at a frequency of 100 percent If discrepancies are found, the data must be returned to the analyst who performed the initial calculation for resolution

12 10.5 The reviewing analyst must initial and date the front chromatogram of the raw data package to document that they have performed the second level review on the sample data.

12.10 6 All items listed on the data review checklist must be checked by both the analyst who performed the initial qualitative and quantitative analysis and the analyst who performed the second level review An example data review checklist is shown in Figure 3

13 Method Performance

13 1 Method Detection Limit (MDL) - An MDL must be determined for each analyte in each routine matrix prior to the analysis of any samples. The procedure for determination of the method detection limit is given in the SOP CA-Q-S006, current revision, and Attachment based on 40 CFR Part 136 Appendix B. The result of the MDL determination must support the reporting limit. MDL summaries are stored on the local area network

13 2 Initial Demonstration of Capability – Each analyst must perform an initial demonstration of capability (IDOC) for each target analyte prior to performing the analysis independently. The IDOC is determined by analyzing four replicate spikes

(e g , LCSs) as detailed in TestAmerica Knoxville SOP KNOX-QA-0009.

13 3 Training Qualification The group/team leader has the responsibility to ensure that this procedure is performed by an associate who has been properly trained in its use and has the required experience. Refer to SOP KNOX-QA-0009 current revision for further requirements for performing and documenting initial and on-going demonstrations of capability.

14 Pollution Prevention

14 1 All attempts will be made to minimize the use of solvents and standard materials.

15 Waste Management

15.1 All waste will be disposed of in accordance with Federal, State and Local regulations. Where reasonably feasible, technological changes have been implemented to minimize the potential for pollution of the environment Employees will abide by this method and the policies in section 13 of the Corporate Safety Manual for "Waste Management and Pollution Prevention."

15 2 Waste Streams Produced by the Procedure The following waste streams are produced when this method is carried out

- Waste methylene chloride from sample preparation, glassware rinsing and sodium sulfate pre-rinsing shall be placed in the flammable waste stream, contained in a steel satellite accumulation container or flammable solvent container
- Waste acetone and hexane from glassware and acid rinsing shall be placed in the flammable waste stream, contained in a steel satellite accumulation container or flammable solvent container
- Miscellaneous disposable glassware, chemical resistant gloves, bench paper and similar materials shall be placed in the incinerable laboratory waste stream, contained in a steel or poly satellite accumulation container
- Extracted PUF filters, XAD-2 resin, paper funnel filters, glass wool, fish/crawfish and soil contaminated with methylene chloride shall be placed in the incinerable laboratory waste stream, contained in a steel or poly satellite accumulation container
- Contaminated sulfuric acid used during extract cleanup shall be placed in the acidic waste stream, contained in a poly satellite accumulation container.
- Extracted aqueous samples, contaminated with methylene chloride shall be placed in the organic water waste stream, contained in a poly satellite accumulation container

16 References

16.1 Knoxville Laboratory Quality Assurance Manual (QAM), current revision.

16 2 USEPA SW-846 "Test Methods for Evaluating Solid Waste" Third Edition

16 3 Method 1613 Tetra- through Octa-Chlorinated Dioxins and Furans by Isotope Dilution HRGC/HRMS [Revision B], EPA# 821/B-94-005a YEAR 1994

16 4 Method 1668 Toxic Polychlorinated Biphenyls by Isotope Dilution High Resolution Gas Chromatography/High Resolution Mass Spectrometry [Draft], EPA# 821/R-97-001 YEAR 1997

16 5 Ballschmiter, K and M. Zell, "Analysis of Polychlorinated Biphenyls (PCB) by Glass Capillary Gas Chromatography", *Fresenius Z Anal Chem.*, 302 20-31 (1980).

16.6 Schulte, E. and R Malisch, "Berechnung der Wahren PCB-Gehalte in Umweltproben I. Ermittlung der Zusammensetzung Zweier Technischer PCB-Gemische," *Fresenius Z Anal Chem* , 314 545-551 (1983).

16.7 Guitart, R , P Puig and J Gómez-Catalán, "Requirement for a Standardized Nomenclature Criterion for PCBs Computer-Assisted Assignment of Correct Congener Denomination and Numbering," *Chemosphere*, 27(8) 1451-1459 (1993)

16.8 Rigaudy, J and Klesney, S.P , Nomenclature of Organic Chemistry, Pergamon, 1979.

16 9 Pretsch, Clerc, Seibl, Simon, Tables of Spectral Data for Structure Determination of Organic Compounds, Second Edition, Springer-Verlag, 1989

16 10 CRC Handbook of Chemistry and Physics, 71st edition, CRC Press, 1990-1991.

17 Miscellaneous

17 1 Deviations from EPA Method 1668, Revision A.

17.1 1 Additional recovery standards are used in this procedure. The additional standards are listed in Table 1

17 1.2 Additional labeled standards are used in this procedure as field sampling surrogates The additional standards are listed in Table 1

17 1 3 A solvent mixture of acetone hexane (1 1 volume) is used instead of toluene for extractions of solids and samples containing particles.

17 1 4 Fish oil is allowed as an alternative to corn oil or other vegetable oil as a reference matrix for tissues.

17.1 5 The method authors had observed that when their columns were degraded, PCBs 156 and 157 became resolved. The method indicates that the compounds must coelute within 2 seconds Using constant flow conditions, this laboratory has resolved PCB 156 from PCB 157 on columns that are not degraded This procedure does not require the coelution of the two isomers, but requires that the retention times may not change significantly in relative retention times, in accordance with section 10 4.5.6.

17 1 6 The calibration procedure in the method calls for a single point standard

for the non-Toxic/LOC congeners This procedure uses a multi-point calibration for all 209 congeners

17.1 7 This procedure uses MID groups that differ from the method The procedure uses 4 groups, rather than 6, to improve instrument stability, by holding the magnet current steady for longer periods. Therefore alternate PFK lock masses are monitored, to reflect the mass ranges of the procedure's MID groups

17 1 8 This procedure uses average retention times (and average relative retention times) produced by triplicate analyses of the 5 mixes specified, rather than single analyses of the diluted 209 standard

17.1 9 The absolute retention times, relative retention times, and relative retention time limits used by the laboratory differ from those listed in Method 1668A. Each SPC-Octyl column used by the laboratory has exhibited slightly different retention time characteristics resulting in different absolute retention times than those listed in the method or those observed with another SPB-Octyl column To ensure that the correct peak assignments are made, a retention time study is performed for each new column This study includes the triplicate analysis of the five retention time mixes listed in Method 1668A as described in Section 10.2 5 to 10 2 7. This procedure requires a minimum elution time of 55 minutes for PCB 209

17 1 10 The calibration verification procedures in the method call for updating the retention times, relative retention times and response factors for non-Toxic compounds during daily calibration and use the retention times, relative retention times and response factors from the initial calibration for Toxic and LOC compounds This laboratory uses the retention times and relative retention times from triplicate analyses of the 5-mix series, which contains all congeners, and uses response factors from the initial calibration for all 209 compounds The practice of updating the relative retention times of only a subset of compounds causes significant error in the linear regression prediction formulas used by targeting software to identify the compounds This procedure has provisions for updating all RT's and RRT's by analyzing a new retention time calibration series.

17.1 11 The EMLs listed in Table 4 differ from those listed in the reference method The EMLs are set above the mean plus 2 standard deviations for the higher of detections or EDLs for method blanks. In no case is the EML lower than the low calibration limit The survey period was approximately 14 months

17.2 Summary of modifications to SOP from Revision 7

17.2 1 Added a note to Section 6 0 about labeling glassware for aqueous samples.

17.2 2 Added a note to Section 7 12 about standard solution maintenance and documentation

17 2 3 Modified Section 10 3 2 regarding PFK mass resolution check

17.2 4 Removed previous version of Section 10 3 2 1 and 10.3 3 which were replaced by modified Section 10 3 2

17 3 List of tables and figures referenced in the body of the SOP

17 3.1 Table 1 - Polychlorinated Biphenyls Determined by Isotope Dilution and Internal Standard High Resolution Gas Chromatography (HRGC)/High Resolution Mass Spectrometry (HRMS)

17 3 2 Table 2 - RT References, Quantitation References, Retention Times (RT), and Relative Retention Times (RRTs) for the 209 CB congeners on SPB-Octyl

17.3 3 Table 3– Low Calibration Levels Based on Various Final Extract Volumes

17.3.4 Table 4 - Estimated Minimum Levels – Matrix and Concentration

17 3.5 Table 5-Concentration of Stock & Spiking Solutions Containing PCBs & Labeled Compounds

17 3 6 Table 6- Concentration of PCBs in Calibration Solutions

17 3 7 Table 7- Window Defining Mixture and SPB-Octyl Resolution Test Compounds

17.3 8 Table 8- Ions Monitored for HRGC/HRMS Analysis of PCBs

17 3 9 Table 9- Theoretical Ion Abundance Ratios and Their Control Limits for PCBs

17 3 10 Table 10-Acceptance Criteria for Performance Tests

17 3 11 Table 11- Retention Times of Isomers on SPB-Octyl Column for PCB Standard Mixes

17.3 12 Table 12- Assignment of Sample Preparation Protocols

17 3.13 Figure 1 - Recommended GC Operating Conditions

17 3 14 Figure 2 - Recommended MID Descriptors

17 3 15 Figure 3- Example Data Review Checklist

17.3 16 Figure 4- Analysis of PCB's by HRGC/LRMS (Flowchart)

17 3 17 History of Revisions

REVISION NUMBER	DATE
0	9/28/99

1	10/12/01
2	1/17/02
3	8/17/05
4	9/22/05
5	5/25/07
6	10/19/07
7	7/10/08
8	4/1/09

Table

1

Polychlorinated Biphenyls Determined by HRGC/HRMS

BZ/IUPAC Number[1]	PCB Chemical Structure Name[2]	CAS Registry[3] Number	Labeled Analog	CAS Registry[3]	Usage
1	2-monochlorobiphenyl	2051-60-7	$^{13}C_{12}$-2-monochlorobiphenyl	234432-85-0	Internal Std
2	3-monochlorobiphenyl	2051-61-8			
3	4-monochlorobiphenyl	2051-62-9	$^{13}C_{12}$-4-monochlorobiphenyl	208263-77-8	Internal Std
4	2,2'-dichlorobiphenyl	13029-08-8	$^{13}C_{12}$-2,2'-dichlorobiphenyl	234432-86-1	Internal Std
5	2,3-dichlorobiphenyl	16605-91-7			
6	2,3'-dichlorobiphenyl	25569-80-6			
7	2,4-dichlorobiphenyl	33284-50-3			
8	2,4'-dichlorobiphenyl	34883-43-7	$^{13}C_{12}$-2,4'-dichlorobiphenyl		Surrogate Std
9	2,5-dichlorobiphenyl	34883-39-1	$^{13}C_{12}$-2,5-dichlorobiphenyl	250694-89-4	Recovery Std
10	2,6-dichlorobiphenyl	33146-45-1			
11	3,3'-dichlorobiphenyl	2050-67-1			
12	3,4-dichlorobiphenyl	2974-92-7			
13	3,4'-dichlorobiphenyl	2974-90-5			
14	3,5-dichlorobiphenyl	34883-41-5			
15	4,4'-dichlorobiphenyl	2050-68-2	$^{13}C_{12}$-4,4'-dichlorobiphenyl	208263-67-6	Internal Std
16	2,2',3-trichlorobiphenyl	38444-78-9			
17	2,2',4-trichlorobiphenyl	37680-66-3			
18	2,2',5-trichlorobiphenyl	37680-65-2			
19	2,2',6-trichlorobiphenyl	38444-73-4	$^{13}C_{12}$-2,2',6-trichlorobiphenyl	234432-87-2	Internal Std
20	2,3,3'-trichlorobiphenyl	38444-84-7			
21	2,3,4-trichlorobiphenyl	55702-46-0			
22	2,3,4'-trichlorobiphenyl	38444-85-8			
23	2,3,5-trichlorobiphenyl	55720-44-0			
24	2,3,6-trichlorobiphenyl	55702-45-9			
25	2,3',4-trichlorobiphenyl	55712-37-3			
26	2,3',5-trichlorobiphenyl	38444-81-4			
27	2,3',6-trichlorobiphenyl	38444-76-7			
28	2,4,4'-trichlorobiphenyl	7012-37-5	$^{13}C_{12}$-2,4,4'-trichlorobiphenyl	208263-76-7	Cleanup Std
29	2,4,5-trichlorobiphenyl	15862-07-4			
30	2,4,6-trichlorobiphenyl	35693-92-6			
31	2,4',5-trichlorobiphenyl	16606-02-3	$^{13}C_{12}$-2,4',5-trichlorobiphenyl		Recovery Std
32	2,4',6-trichlorobiphenyl	38444-77-8	$^{13}C_{12}$-2,4',6-trichlorobiphenyl		Recovery Std
33	2',3,4-trichlorobiphenyl (2,3',4'-trichlorobiphenyl)	38444-86-9			
34	2',3,5-trichlorobiphenyl (2,3',5'-trichlorobiphenyl)	37680-68-5			
35	3,3',4-trichlorobiphenyl	37680-69-6			
36	3,3',5-trichlorobiphenyl	38444-87-0			
37	3,4,4'-trichlorobiphenyl	38444-90-5	$^{13}C_{12}$-3,4,4'-trichlorobiphenyl	208263-79-0	Internal Std
38	3,4,5-trichlorobiphenyl	53555-66-1			
39	3,4',5-trichlorobiphenyl	38444-88-1			
40	2,2',3,3'-tetrachlorobiphenyl	38444-93-8			
41	2,2',3,4-tetrachlorobiphenyl	52663-59-9			
42	2,2',3,4'-tetrachlorobiphenyl	36559-22-5			
43	2,2',3,5-tetrachlorobiphenyl	70362-46-8			
44	2,2',3,5'-tetrachlorobiphenyl	41464-39-5			
45	2,2',3,6-tetrachlorobiphenyl	70362-45-7			
46	2,2',3,6'-tetrachlorobiphenyl	41464-47-5			
47	2,2',4,4'-tetrachlorobiphenyl	2437-79-8			
48	2,2',4,5-tetrachlorobiphenyl	70362-47-9			
49	2,2',4,5'-tetrachlorobiphenyl	41464-40-8			
50	2,2',4,6-tetrachlorobiphenyl	62796-65-0			
51	2,2',4,6'-tetrachlorobiphenyl	68194-04-7			
52	2,2',5,5'-tetrachlorobiphenyl	35693-99-3	$^{13}C_{12}$-2,2',5,5'-tetrachlorobiphenyl	160901-66-6	Recovery Std

BZ/IUPAC Number[1]	PCB Chemical Structure Name[2]	CAS Registry[3] Number	Labeled Analog	CAS Registry[3]	Usage
53	2,2',5,6'-tetrachlorobiphenyl	41464-41-9			
54	2,2',6,6'-tetrachlorobiphenyl	15968-05-5	$^{13}C_{12}$-2,2',6,6'-tetrachlorobiphenyl	234432-88-3	Internal Std
55	2,3,3',4-tetrachlorobiphenyl	74338-24-2			
56	2,3,3',4'-tetrachlorobiphenyl	41464-43-1			
57	2,3,3',5-tetrachlorobiphenyl	70424-67-8			
58	2,3,3',5'-tetrachlorobiphenyl	41464-49-7			
59	2,3,3',6-tetrachlorobiphenyl	74472-33-6			
60	2,3,4,4'-tetrachlorobiphenyl	33025-41-1			
61	2,3,4,5-tetrachlorobiphenyl	33284-53-6			
62	2,3,4,6-tetrachlorobiphenyl	54230-22-7			
63	2,3,4',5-tetrachlorobiphenyl	74472-34-7			
64	2,3,4',6-tetrachlorobiphenyl	52663-58-8			
65	2,3,5,6-tetrachlorobiphenyl	33284-54-7			
66	2,3',4,4'-tetrachlorobiphenyl	32598-10-0			
67	2,3',4,5-tetrachlorobiphenyl	73575-53-8			
68	2,3',4,5'-tetrachlorobiphenyl	73575-52-7			
69	2,3',4,6-tetrachlorobiphenyl	60233-24-1			
70	2,3',4',5-tetrachlorobiphenyl	32598-11-1			
71	2,3',4',6-tetrachlorobiphenyl	41464-46-4			
72	2,3',5,5'-tetrachlorobiphenyl	41464-42-0			
73	2,3',5',6-tetrachlorobiphenyl	74338-23-1			
74	2,4,4',5-tetrachlorobiphenyl	32690-93-0			
75	2,4,4',6-tetrachlorobiphenyl	32598-12-2			
76	2',3,4,5-tetrachlorobiphenyl (2,3',4',5'-tetrachlorobiphenyl)	70362-48-0			
77	3,3',4,4'-tetrachlorobiphenyl	32598-13-3	$^{13}C_{12}$-3,3',4,4'-tetrachlorobiphenyl	160901-67-7	Internal Std
[illegible]8	3,3',4,5-tetrachlorobiphenyl	70362-49-1			
[illegible]9	3,3',4,5'-tetrachlorobiphenyl	41464-48-6	$^{13}C_{12}$-3,3',4,5'-tetrachlorobiphenyl		Surrogate Std
80	3,3',5,5'-tetrachlorobiphenyl	33284-52-5			
81	3,4,4',5-tetrachlorobiphenyl	70362-50-4	$^{13}C_{12}$-3,4,4',5-tetrachlorobiphenyl	160901-68-8	Internal Std
82	2,2',3,3',4-pentachlorobiphenyl	52663-62-4			
83	2,2',3,3',5-pentachlorobiphenyl	60145-20-2			
84	2,2',3,3',6-pentachlorobiphenyl	52663-60-2			
85	2,2',3,4,4'-pentachlorobiphenyl	65510-45-4			
86	2,2',3,4,5-pentachlorobiphenyl	55312-69-1			
87	2,2',3,4,5'-pentachlorobiphenyl	38380-02-8			
88	2,2',3,4,6-pentachlorobiphenyl	55215-17-3			
89	2,2',3,4,6'-pentachlorobiphenyl	73575-57-2			
90	2,2',3,4',5-pentachlorobiphenyl	68194-07-0			
91	2,2',3,4',6-pentachlorobiphenyl	68194-05-8			
92	2,2',3,5,5'-pentachlorobiphenyl	52663-61-3			
93	2,2',3,5,6-pentachlorobiphenyl	73575-56-1			
94	2,2',3,5,6'-pentachlorobiphenyl	73575-55-0			
95	2,2',3,5',6-pentachlorobiphenyl	38379-99-6	$^{13}C_{12}$-2,2',3,5',6-pentachlorobiphenyl		Surrogate Std
96	2,2',3,6,6'-pentachlorobiphenyl	73575-54-9			
97	2,2',3',4,5-pentachlorobiphenyl (2,2',3,4',5'-pentachlorobiphenyl)	41464-51-1			
98	2,2',3',4,6-pentachlorobiphenyl (2,2',3,4',6'-pentachlorobiphenyl)	60233-25-2			
99	2,2',4,4',5-pentachlorobiphenyl	38380-01-7			
100	2,2',4,4',6-pentachlorobiphenyl	39485-83-1			
101	2,2',4,5,5'-pentachlorobiphenyl	37680-73-2	$^{13}C_{12}$-2,2',4,5,5'-pentachlorobiphenyl	160901-69-9	Recovery Std
102	2,2',4,5,6' -pentachlorobiphenyl	68194-06-9			
103	2,2',4,5',6-pentachlorobiphenyl	60145-21-3			
104	2,2',4,6,6'-pentachlorobiphenyl	56558-16-8	$^{13}C_{12}$-2,2',4,6,6'-pentachlorobiphenyl	234432-89-4	Internal Std
105	2,3,3',4,4'-pentachlorobiphenyl	32598-14-4	$^{13}C_{12}$-2,3,3',4,4'-pentachlorobiphenyl	160901-70-2	Internal Std
106	2,3,3',4,5-pentachlorobiphenyl	70424-69-0			
107/109	2,3,3',4,6-pentachlorobiphenyl	74472-35-8			
[illegible]8/107	2,3,3',4',5-pentachlorobiphenyl	70424-68-9			
[illegible]9/108	2,3,3',4,5'-pentachlorobiphenyl	70362-41-3			
110	2,3,3',4',6-pentachlorobiphenyl	38380-03-9			
111	2,3,3',5,5'-pentachlorobiphenyl	39635-32-0	$^{13}C_{12}$-2,3,3',5,5'-pentachlorobiphenyl	160901-71-3	Cleanup Std

BZ/IUPAC Number[1]	PCB Chemical Structure Name[2]	CAS Registry[3] Number	Labeled Analog	CAS Registry[3]	Usage
112	2,3,3',5,6-pentachlorobiphenyl	74472-36-9			
113	2,3,3',5',6-pentachlorobiphenyl	68194-10-5			
114	2,3,4,4',5-pentachlorobiphenyl	74472-37-0	$^{13}C_{12}$-2,3,4,4',5-pentachlorobiphenyl	160901-72-4	Internal Std
115	2,3,4,4',6-pentachlorobiphenyl	74472-38-1			
116	2,3,4,5,6-pentachlorobiphenyl	18259-05-7			
117	2,3,4',5,6-pentachlorobiphenyl	68194-11-6			
118	2,3',4,4',5-pentachlorobiphenyl	31508-00-6	$^{13}C_{12}$-2,3',4,4',5-pentachlorobiphenyl	160901-73-5	Internal Std
119	2,3',4,4',6-pentachlorobiphenyl	56558-17-9			
120	2,3',4,5,5'-pentachlorobiphenyl	68194-12-7			
121	2,3',4,5',6-pentachlorobiphenyl	56558-18-0			
122	2',3,3',4,5-pentachlorobiphenyl (2,3,3',4',5'-pentachlorobiphenyl)	76842-07-4			
123	2',3,4,4',5-pentachlorobiphenyl (2,3',4,4',5'-pentachlorobiphenyl)	65510-44-3	$^{13}C_{12}$-2',3,4,4',5-pentachlorobiphenyl	160901-74-6	Internal Std
124	2',3,4,5,5'-pentachlorobiphenyl (2,3',4',5',5-pentachlorobiphenyl)	70424-70-3			
125	2',3,4,5,6'-pentachlorobiphenyl (2,3',4',5',6-pentachlorobiphenyl)	74472-39-2			
126	3,3',4,4',5-pentachlorobiphenyl	57465-28-8	$^{13}C_{12}$-3,3',4,4',5-pentachlorobiphenyl	160901-75-7	Internal Std
127	3,3',4,5,5'-pentachlorobiphenyl	39635-33-1	$^{13}C_{12}$-3,3',4,5,5'-pentachlorobiphenyl		Recovery Std
128	2,2',3,3',4,4'-hexachlorobiphenyl	38380-07-3			
129	2,2',3,3',4,5-hexachlorobiphenyl	55215-18-4			
130	2,2',3,3',4,5'-hexachlorobiphenyl	52663-66-8			
131	2,2',3,3',4,6-hexachlorobiphenyl	61798-70-7			
132	2,2',3,3',4,6'-hexachlorobiphenyl	38380-05-1			
133	2,2',3,3',5,5'-hexachlorobiphenyl	35694-04-3			
134	2,2',3,3',5,6-hexachlorobiphenyl	52704-70-8			
135	2,2',3,3',5,6'-hexachlorobiphenyl	52744-13-5			
136	2,2',3,3',6,6'-hexachlorobiphenyl	38411-22-2			
137	2,2',3,4,4',5-hexachlorobiphenyl	35694-06-5			
138	2,2',3,4,4',5'-hexachlorobiphenyl	35065-28-2	$^{13}C_{12}$-2,2',3,4,4',5'-hexachlorobiphenyl	160901-76-8	Recovery Std
139	2,2',3,4,4',6-hexachlorobiphenyl	56030-56-9			
140	2,2',3,4,4',6'-hexachlorobiphenyl	59291-64-4			
141	2,2',3,4,5,5'-hexachlorobiphenyl	52712-04-6			
142	2,2',3,4,5,6-hexachlorobiphenyl	41411-61-4			
143	2,2',3,4,5,6'-hexachlorobiphenyl	68194-15-0			
144	2,2',3,4,5',6-hexachlorobiphenyl	68194-14-9			
145	2,2',3,4,6,6'-hexachlorobiphenyl	74472-40-5			
146	2,2',3,4',5,5'-hexachlorobiphenyl	51908-16-8			
147	2,2',3,4',5,6-hexachlorobiphenyl	68194-13-8			
148	2,2',3,4',5,6'-hexachlorobiphenyl	74472-41-6			
149	2,2',3,4',5',6-hexachlorobiphenyl	38380-04-0			
150	2,2',3,4',6,6'-hexachlorobiphenyl	68194-08-1			
151	2,2',3,5,5',6-hexachlorobiphenyl	52663-63-5			
152	2,2',3,5,6,6'-hexachlorobiphenyl	68194-09-2			
153	2,2',4,4',5,5'-hexachlorobiphenyl	35065-27-1	$^{13}C_{12}$-2,2',4,4',5,5'-hexachlorobiphenyl		Surrogate Std
154	2,2',4,4',5,6'-hexachlorobiphenyl	60145-22-4			
155	2,2',4,4',6,6'-hexachlorobiphenyl	33979-03-2	$^{13}C_{12}$-2,2',4,4',6,6'-hexachlorobiphenyl	234432-90-7	Internal Std
156	2,3,3',4,4',5-hexachlorobiphenyl	38380-08-4	$^{13}C_{12}$-2,3,3',4,4',5-hexachlorobiphenyl	160901-77-9	Internal Std
157	2,3,3',4,4',5'-hexachlorobiphenyl	69782-90-7	$^{13}C_{12}$-2,3,3',4,4',5'-hexachlorobiphenyl	160901-78-0	Internal Std
158	2,3,3',4,4',6-hexachlorobiphenyl	74472-42-7			
159	2,3,3',4,5,5'-hexachlorobiphenyl	39635-35-3			
160	2,3,3',4,5,6-hexachlorobiphenyl	41411-62-5			
161	2,3,3',4,5',6-hexachlorobiphenyl	74472-43-8			
162	2,3,3',4',5,5'-hexachlorobiphenyl	39635-34-2			
163	2,3,3',4',5,6-hexachlorobiphenyl	74472-44-9			
164	2,3,3',4',5',6-hexachlorobiphenyl	74472-45-0			
165	2,3,3',5,5',6-hexachlorobiphenyl	74472-46-1			
166	2,3,4,4',5,6-hexachlorobiphenyl	41411-63-6			
167	2,3',4,4',5,5'-hexachlorobiphenyl	52663-72-6	$^{13}C_{12}$-2,3',4,4',5,5'-hexachlorobiphenyl	161627-18-5	Internal Std
168	2,3',4,4',5',6-hexachlorobiphenyl	59291-65-5			
169	3,3',4,4',5,5'-hexachlorobiphenyl	32774-16-6	$^{13}C_{12}$-3,3',4,4',5,5'-hexachlorobiphenyl	160901-79-1	Internal Std

BZ/IUPAC Number[1]	PCB Chemical Structure Name[2]	CAS Registry[3] Number	Labeled Analog	CAS Registry[3]	Usage
170	2,2',3,3',4,4',5-heptachlorobiphenyl	35065-30-6	$^{13}C_{12}$-2,2',3,3',4,4',5-heptachlorobiphenyl	160901-80-4	Internal Std
171	2,2',3,3',4,4',6-heptachlorobiphenyl	52663-71-5			
172	2,2',3,3',4,5,5'-heptachlorobiphenyl	52663-74-8			
173	2,2',3,3',4,5,6-heptachlorobiphenyl	68194-16-1			
174	2,2',3,3',4,5,6'-heptachlorobiphenyl	38411-25-5			
175	2,2',3,3',4,5',6-heptachlorobiphenyl	40186-70-7			
176	2,2',3,3',4,6,6'-heptachlorobiphenyl	52663-65-7			
177	2,2',3,3',4',5,6-heptachlorobiphenyl (2,2',3,3',4,5',6'-heptachlorobiphenyl)	52663-70-4			
178	2,2',3,3',5,5',6-heptachlorobiphenyl	52663-67-9	$^{13}C_{12}$-2,2',3,3',5,5',6-heptachlorobiphenyl	160901-81-5	Cleanup Std
179	2,2',3,3',5,6,6'-heptachlorobiphenyl	52663-64-6			
180	2,2',3,4,4',5,5'-heptachlorobiphenyl	35065-29-3	$^{13}C_{12}$-2,2',3,4,4',5,5'-heptachlorobiphenyl	160901-82-6	Recovery Std
181	2,2',3,4,4',5,6-heptachlorobiphenyl	74472-47-2			
182	2,2',3,4,4',5,6'-heptachlorobiphenyl	60145-23-5			
183	2,2',3,4,4',5',6-heptachlorobiphenyl	52663-69-1			
184	2,2',3,4,4',6,6'-heptachlorobiphenyl	74472-48-3			
185	2,2',3,4,5,5',6-heptachlorobiphenyl	52712-05-7			
186	2,2',3,4,5,6,6'-heptachlorobiphenyl	74472-49-4			
187	2,2',3,4',5,5',6-heptachlorobiphenyl	52663-68-0			
188	2,2',3,4',5,6,6'-heptachlorobiphenyl	74487-85-7	$^{13}C_{12}$-2,2',3,4',5,6,6'-heptachlorobiphenyl	234432-91-8	Internal Std
189	2,3,3',4,4',5,5'-heptachlorobiphenyl	39635-31-9	$^{13}C_{12}$-2,3,3',4,4',5,5'-heptachlorobiphenyl	160901-83-7	Internal Std
190	2,3,3',4,4',5,6-heptachlorobiphenyl	41411-64-7			
191	2,3,3',4,4',5',6-heptachlorobiphenyl	74472-50-7			
192	2,3,3',4,5,5',6-heptachlorobiphenyl	74472-51-8			
193	2,3,3',4',5,5',6-heptachlorobiphenyl	69782-91-8			
194	2,2',3,3',4,4',5,5'-octachlorobiphenyl	35694-08-7	$^{13}C_{12}$-2,2',3,3',4,4',5,5'-octachlorobiphenyl	208263-74-5	Recovery Std
195	2,2',3,3',4,4',5,6-octachlorobiphenyl	52663-78-2			
196	2,2',3,3',4,4',5,6'-octachlorobiphenyl	42740-50-1			
197	2,2',3,3',4,4',6,6'-octachlorobiphenyl	33091-17-7			
198	2,2',3,3',4,5,5',6-octachlorobiphenyl	68194-17-2			
199/200	2,2',3,3',4,5,6,6'-octachlorobiphenyl	52663-73-7			
200/201	2,2',3,3',4,5',6,6'-octachlorobiphenyl	40186-71-8			
201/199	2,2',3,3',4,5,5',6'-octachlorobiphenyl	52663-75-9			
202	2,2',3,3',5,5',6,6'-octachlorobiphenyl	2136-99-4	$^{13}C_{12}$-2,2',3,3',5,5',6,6'-octachlorobiphenyl	105600-26-8	Internal Std
203	2,2',3,4,4',5,5',6-octachlorobiphenyl	52663-76-0			
204	2,2',3,4,4',5,6,6'-octachlorobiphenyl	74472-52-9			
205	2,3,3',4,4',5,5',6-octachlorobiphenyl	74472-53-0	$^{13}C_{12}$-2,3,3',4,4',5,5',6-octachlorobiphenyl	234446-64-1	Internal Std
206	2,2',3,3',4,4',5,5',6-nonachlorobiphenyl	40186-72-9	$^{13}C_{12}$-2,2',3,3',4,4',5,5',6-nonachlorobiphenyl	208263-75-6	Internal Std
207	2,2',3,3',4,4',5,6,6'-nonachlorobiphenyl	52663-79-3			
208	2,2',3,3',4,5,5',6,6'-nonachlorobiphenyl	52663-77-1	$^{13}C_{12}$-2,2',3,3',4,5,5',6,6'-nonachlorobiphenyl	234432-92-9	Internal Std
209	2,2',3,3',4,4',5,5',6,6'-decachlorobiphenyl	2051-24-3	$^{13}C_{12}$-decachlorobiphenyl	160901-84-8	Internal Std

1 The BZ number is from Ballschmiter and Zell (1980) The IUPAC number, when different from the BZ, follows the recommended changes to the BZ number per Schulte and Malisch (1983) and Guitart et al (1993)

2 The chemical structure names are from Ballschmiter and Zell (1980) IUPAC nomenclature structure names are listed in parenthesis when different from the BZ name (source CAS Registry)

3 Chemical Abstract Service Registry number (source CAS Registry and 1668A Table 1)

Table 2

RT References, Quantitation References, Retention Times (RT), and Relative Retention Times (RRTs) for the 209 CB congeners on SPB-Octyl

Cl No[1]	IUPAC No[2 3]	RT Ref[4]	Quantitation Reference[5]	RT Win[6] (sec)
1	1L	9L	9L	30
1	3L	9L	9L	30
1	1	1L	1L	10
1	2	3L	1L/3L	6
1	3	3L	3L	6
2	4L	9L	9L	30
2	9L	9L	9L	25
2	8L	4L	4L/15L	6
2	15L	9L	9L	20
2	4	4L	4L	10
2	10	4L	4L/15L	6
2	9	4L	4L/15L	6
2	7	4L	4L/15L	6
2	6	4L	4L/15L	6
2	5	4L	4L/15L	6
2	8	4L	4L/15L	6
2	14	15L	4L/15L	6
2	11	15L	4L/15L	6
2	13	15L	4L/15L	6
2	12	15L	4L/15L	6
2	15	15L	15L	10
3	19L	32L	32L	30
3	32L	32L	32L	6
3	31L	31L	31L	6
3	28L	31L	31L	20
3	37L	31L	31L	30
3	19	19L	19L	10
3	30	19L	19L	6
3	18	19L	19L	6
3	17	19L	19L	6
3	27	19L	19L	6
3	24	19L	19L	6
3	16	19L	19L	6
3	32	19L	19L	6
3	34	19L	37L	6
3	23	19L	37L	6
3	29	19L	37L	10
3	26	19L	37L	10
3	25	37L	37L	6
3	31	37L	37L	6
3	28	37L	37L	10
3	20	37L	37L	10
3	21	37L	37L	10
3	33	37L	37L	10
3	22	37L	37L	6
3	36	37L	37L	6
3	39	37L	37L	6
3	38	37L	37L	6
3	35	37L	37L	6
3	37	37L	37L	6
4	54L	52L	32L	20
4	52L	52L	52L	25
4	79L	81L	81L/77L	6
4	81L	52L	52L	20
4	77L	52L	52L	20
4	54	54L	54L	10
4	50	54L	81L/77L	10
4	53	54L	81L/77L	10
4	45	54L	81L/77L	10
4	51	54L	81L/77L	10
4	46	54L	81L/77L	6
4	52	54L	81L/77L	6
4	73	54L	81L/77L	6
4	43	54L	81L/77L	6
4	69	54L	81L/77L	10

Cl No[1]	IUPAC No[2 3]	RT Ref[4]	Quantitation Reference[5]	RT Win[6] (sec)
4	49	54L	81L/77L	10
4	48	54L	81L/77L	6
4	65	54L	81L/77L	10
4	47	54L	81L/77L	10
4	44	54L	81L/77L	10
4	62	54L	81L/77L	10
4	75	54L	81L/77L	10
4	59	54L	81L/77L	10
4	42	54L	81L/77L	6
4	41	54L	81L/77L	10
4	71	54L	81L/77L	10
4	40	54L	81L/77L	10
4	64	54L	81L/77L	6
4	72	81L	81L/77L	6
4	68	81L	81L/77L	6
4	57	81L	81L/77L	6
4	58	81L	81L/77L	6
4	67	81L	81L/77L	6
4	63	81L	81L/77L	6
4	61	81L	81L/77L	12
4	70	81L	81L/77L	12
4	76	81L	81L/77L	12
4	74	81L	81L/77L	10
4	66	81L	81L/77L	6
4	55	81L	81L/77L	6
4	56	81L	81L/77L	6
4	60	81L	81L/77L	6
4	80	81L	81L/77L	6
4	79	81L	81L/77L	6
4	78	81L	81L/77L	6
4	81	81L	81L	6
4	77	77L	77L	6
5	104L	101L	101L	20
5	95L	104L	104L	10
5	101L	101L	101L	25
5	111L	101L	101L	20
5	123L	101L	127L	20
5	118L	101L	127L	20
5	114L	101L	127L	20
5	105L	101L	127L	20
5	127L	127L	127L	25
5	126L	101L	127L	20
5	104	104L	104L	10
5	96	104L	104L	10
5	103	104L	104L	6
5	94	104L	104L	6
5	95	104L	104L	10
5	100	104L	104L	10
5	93	104L	104L	10
5	102	104L	104L	10
5	98	104L	104L	10
5	88	104L	104L	12
5	91	104L	104L	10
5	84	104L	104L	6
5	89	104L	104L	6
5	121	104L	104L	6
5	92	123L	104L	6
5	113	104L	104L	10
5	90	104L	104L	10
5	101	104L	104L	10
5	83	104L	104L	12
5	99	104L	104L	10
5	112	104L	104L	6
5	119	104L	104L	16
5	108	104L	104L	16
5	86	104L	104L	16
5	97	104L	104L	16
5	125	104L	104L	16
5	87	104L	104L	10
5	117	104L	104L	12
5	116	104L	104L	12
5	85	104L	104L	10
5	110	104L	104L	10

Cl No[1]	IUPAC No[2 3]	RT Ref[4]	Quantitation Reference[5]	RT Win[6] (sec)
5	115	104L	104L	10
5	82	104L	104L	6
5	111	104L	104L	6
5	120	104L	104L	6
5	107	104L	123L/114L/118L/105L/126L	10
5	124	104L	123L/114L/118L/105L/126L	10
5	109	104L	123L/114L/118L/105L/126L	6
5	123	123L	123L	6
5	106	123L	123L/114L/118L/105L/126L	6
5	118	118L	118L	6
5	122	118L	123L/114L/118L/105L/126L	6
5	114	114L	114L	6
5	105	105L	105L	6
5	127	105L	123L/114L/118L/105L/126L	6
5	126	126L	126L	6
6	155L	138L	101L	20
6	153L	167L	156L/157L/167L/169L	10
6	138L	138L	138L	100
6	167L	138L	138L	20
6	156L	138L	138L	6
6	157L	138L	138L	20
6	169L	138L	138L	6
6	155	155L	155L	10
6	152	155L	155L	6
6	150	155L	155L	6
6	136	155L	155L	6
6	145	155L	155L	6
6	148	155L	155L	6
6	151	155L	155L	10
6	135	155L	155L	10
6	154	155L	155L	10
6	144	155L	155L	6
6	147	155L	156L/157L/167L/169L	10
6	149	155L	156L/157L/167L/169L	10
6	134	155L	156L/157L/167L/169L	10
6	143	155L	156L/157L/167L/169L	10
6	139	155L	156L/157L/167L/169L	10
6	140	155L	156L/157L/167L/169L	10
6	131	155L	156L/157L/167L/169L	6
6	142	155L	156L/157L/167L/169L	6
6	132	155L	156L/157L/167L/169L	10
6	133	155L	156L/157L/167L/169L	6
6	165	167L	156L/157L/167L/169L	6
6	146	167L	156L/157L/167L/169L	6
6	161	167L	156L/157L/167L/169L	6
6	153	167L	156L/157L/167L/169L	10
6	168	167L	156L/157L/167L/169L	10
6	141	167L	156L/157L/167L/169L	6
6	130	167L	156L/157L/167L/169L	6
6	137	167L	156L/157L/167L/169L	6
6	164	167L	156L/157L/167L/169L	6
6	138	167L	156L/157L/167L/169L	14
6	163	167L	156L/157L/167L/169L	14
6	129	167L	156L/157L/167L/169L	14
6	160	167L	156L/157L/167L/169L	10
6	158	167L	156L/157L/167L/169L	6
6	166	167L	156L/157L/167L/169L	10
6	128	167L	156L/157L/167L/169L	10
6	159	167L	156L/157L/167L/169L	6
6	162	167L	156L/157L/167L/169L	6
6	167	167L	167L	6
6	156	156L	156L/157L	6
6	157	157L	156L/157L	10
6	169	169L	169L	6
7	188L	180L	180L	20
7	178L	180L	180L	20
7	180L	180L	180L	100
7	170L	180L	180L	20
7	189L	180L	194L	20
7	188	188L	188L	6
7	179	188L	188L/170L	6
7	184	188L	188L/170L	6
7	176	188L	188L/170L	6

Cl No[1]	IUPAC No[2 3]	RT Ref[4]	Quantitation Reference[5]	RT Win[6] (sec)
7	186	188L	188L/170L	6
7	178	188L	188L/170L	6
7	175	188L	188L/170L	6
7	187	188L	188L/170L	6
7	182	188L	188L/170L	6
7	183	188L	188L/170L	6
7	185	188L	188L/170L	6
7	174	188L	188L/170L	6
7	177	188L	188L/170L	6
7	181	188L	188L/170L	6
7	171	188L	188L/170L	10
7	173	188L	188L/170L	6
7	172	189L	188L/170L	6
7	192	189L	188L/170L	6
7	193	189L	188L/170L	6
7	180	189L	188L/170L	6
7	191	189L	188L/170L	6
7	170	189L	170L	6
7	190	189L	188L/170L	6
7	189	189L	189L	6
8	202L	194L	180L	20
8	194L	194L	194L	25
8	205L	194L	194L	30
8	202	202L	202L	10
8	201	202L	202L	6
8	204	202L	202L	6
8	197	202L	202L	6
8	200	202L	202L	6
8	198	202L	202L	10
8	199	202L	202L	6
8	196	205L	202L	6
8	203	205L	202L	6
8	195	205L	205L	6
8	194	205L	205L	6
8	205	205L	205L	6
9	208L	194L	194L	20
9	206L	194L	194L	30
9	208	208L	208L	6
9	207	208L	208L/206L	6
9	206	206L	206L	6
10	209L	194L	194L	30
10	209	209L	209L	6

1 Number of chlorines on congener
2 Suffix "L" indicates labeled compound
3 IUPAC Number per Table 2 of Method 1668A
4 Retention time reference that is used to locate target congener
5 Quantitation reference that is used to calculate the concentration of the target congener or labeled standard
6 RT window width for congener or group of two or more congeners

Table 3

Low Calibration Levels (LCLs) Based on Final Extract Volumes

		20 µL Extract Volume		100µL Extract Volume	
Analyte	Minimum Cal Level CS0 5 (ng/mL)	Water 1L (ng/L)	Solids and Tissues 10g (ng/g)	Water 1L (ng/L)	Solids and Tissues 10g (ng/g)
Monochlorobiphenyls	0 5	0 01[1]	0 001[1]	0 05	0 005
Dichlorobiphenyls	0 5	0 01[1]	0 001[1]	0 05	0 005
Trichlorobiphenyls	0 5	0 01	0 001	0 05	0 005
Tetrachlorobiphenyls	0 5	0 01	0 001	0 05	0 005
Pentachlorobiphenyls	0 5	0 01	0 001	0 05	0 005
Hexachlorobiphenyls	0 5	0 01	0 001	0 05	0 005
Heptachlorobiphenyls	0 5	0 01	0 001	0 05	0 005
Octachlorobiphenyls	0 5	0 01	0 001	0 05	0 005
Nonachlorobiphenyls	0 5	0 01	0 001	0 05	0 005
Decachlorobiphenyl	0 5	0 01	0 001	0 05	0 005

1 This value reflects the LCL Reliable detection at this level may not be attained due to evaporative loss in adjusting the extract volume to 20 µL for these homolog groups

2 The values for solids and tissues reflect the LCLs for Protocol 1 as described in section 11 4 If the sample is prepared by another protocol described in that section, the LCLs shown in this table are multiplied by the EML multiplier, shown in the section 11 4 table

Table 4

Estimated Minimum Levels – Matrix and Concentration

Parameter	Water ng/L	Solids ng/g	Tissues ng/g	Solid Wastes ng/g	100 uL Extract ng/mL
PCB 1	0 040	0 01	0 01	0 01	1 0
PCB 2	0 040	0 01	0 01	0 01	1 0
PCB 3	0 040	0 01	0 01	0 01	1 0
PCB 4	0 060	0 02	0 02	0 02	2 0
PCB 5	0 040	0 01	0 01	0 01	1 0
PCB 6	0 040	0 01	0 01	0 01	1 0
PCB 7	0 040	0 01	0 01	0 01	1 0
PCB 8	0 060	0 02	0 02	0 02	2 0
PCB 9	0 040	0 01	0 01	0 01	1 0
PCB 10	0 040	0 01	0 01	0 01	1 0
PCB 11	0 060	0 02	0 02	0 02	2 0
PCB 12	0 060	0 01	0 01	0 01	1 0
PCB 14	0 040	0 01	0 01	0 01	1 0
PCB 13	0 060	0 01	0 01	0 01	1 0
PCB 15	0 040	0 01	0 01	0 01	1 0
PCB 16	0 040	0 01	0 01	0 01	1 0
PCB 17	0 040	0 01	0 01	0 01	1 0
PCB 18	0 060	0 02	0 02	0 02	2 0
PCB 30	0 060	0 02	0 02	0 02	2 0
PCB 19	0 040	0 01	0 01	0 01	1 0
PCB 20	0 040	0 02	0 02	0 02	2 0
PCB 28	0 040	0 02	0 02	0 02	2 0
PCB 21	0 040	0 01	0 01	0 01	1 0
PCB33	0 040	0 01	0 01	0 01	1 0
PCB 22	0 040	0 01	0 01	0 01	1 0
PCB 23	0 040	0 01	0 01	0 01	1 0
PCB 24	0 040	0 01	0 01	0 01	1 0
PCB 25	0 040	0 01	0 01	0 01	1 0
PCB 26	0 040	0 01	0 01	0 01	1 0
PCB 29	0 040	0 01	0 01	0 01	1 0
PCB 27	0 040	0 01	0 01	0 01	1 0
PCB 31	0 040	0 02	0 02	0 02	2 0
PCB 32	0 040	0 01	0 01	0 01	1 0
PCB 34	0 040	0 01	0 01	0 01	1 0
PCB 35	0 040	0 01	0 01	0 01	1 0
PCB 36	0 040	0 01	0 01	0 01	1 0
PCB 37	0 040	0 01	0 01	0 01	1 0
PCB 38	0 040	0 01	0 01	0 01	1 0
PCB 39	0 040	0 01	0 01	0 01	1 0
PCB 40	0 040	0 01	0 01	0 01	1 0
PCB 41	0 040	0 01	0 01	0 01	1 0
PCB 71	0 040	0 01	0 01	0 01	1 0
PCB 42	0 040	0 01	0 01	0 01	1 0
PCB 43	0 040	0 01	0 01	0 01	1 0
PCB 73	0 040	0 01	0 01	0 01	1 0
PCB 44	0 040	0 01	0 01	0 01	1 0
PCB 47	0 040	0 01	0 01	0 01	1 0
PCB 65	0 040	0 01	0 01	0 01	1 0
PCB 45	0 040	0 01	0 01	0 01	1 0
PCB 51	0 040	0 01	0 01	0 01	1 0
PCB 46	0 040	0 01	0 01	0 01	1 0
PCB 48	0 040	0 01	0 01	0 01	1 0

Parameter	Water ng/L	Solids ng/g	Tissues ng/g	Solid Wastes ng/g	100 uL Extract ng/mL
PCB 49	0 040	0 01	0 01	0 01	1 0
PCB 69	0 040	0 01	0 01	0 01	1 0
PCB 50	0 040	0 01	0 01	0 01	1 0
PCB 53	0 040	0 01	0 01	0 01	1 0
PCB 52	0 040	0 01	0 01	0 01	1 0
PCB 54	0 040	0 01	0 01	0 01	1 0
PCB 55	0 040	0 01	0 01	0 01	1 0
PCB 56	0 040	0 01	0 01	0 01	1 0
PCB 57	0 040	0 01	0 01	0 01	1 0
PCB 58	0 040	0 01	0 01	0 01	1 0
PCB 59	0 040	0 01	0 01	0 01	1 0
PCB 62	0 040	0 01	0 01	0 01	1 0
PCB 75	0 040	0 01	0 01	0 01	1 0
PCB 60	0 040	0 01	0 01	0 01	1 0
PCB 61	0 040	0 02	0 02	0 02	2 0
PCB 70	0 040	0 02	0 02	0 02	2 0
PCB 74	0 040	0 02	0 02	0 02	2 0
PCB 76	0 040	0 02	0 02	0 02	2 0
PCB 63	0 040	0 01	0 01	0 01	1 0
PCB 64	0 040	0 01	0 01	0 01	1 0
PCB 66	0 040	0 01	0 01	0 01	1 0
PCB 67	0 040	0 01	0 01	0 01	1 0
PCB 68	0 040	0 01	0 01	0 01	1 0
PCB 72	0 040	0 01	0 01	0 01	1 0
PCB 77	0 040	0 01	0 01	0 01	1 0
PCB 78	0 040	0 01	0 01	0 01	1 0
PCB 79	0 040	0 01	0 01	0 01	1 0
PCB 80	0 040	0 01	0 01	0 01	1 0
PCB 81	0 040	0 01	0 01	0 01	1 0
PCB 82	0 040	0 01	0 01	0 01	1 0
PCB 83	0 040	0 01	0 01	0 01	1 0
PCB 84	0 040	0 01	0 01	0 01	1 0
PCB 85	0 040	0 01	0 01	0 01	1 0
PCB 116	0 040	0 01	0 01	0 01	1 0
PCB 117	0 040	0 01	0 01	0 01	1 0
PCB 86	0 040	0 01	0 01	0 01	1 0
PCB 87	0 040	0 01	0 01	0 01	1 0
PCB 97	0 040	0 01	0 01	0 01	1 0
PCB 109	0 040	0 01	0 01	0 01	1 0
PCB 119	0 040	0 01	0 01	0 01	1 0
PCB 125	0 040	0 01	0 01	0 01	1 0
PCB 88	0 040	0 01	0 01	0 01	1 0
PCB 91	0 040	0 01	0 01	0 01	1 0
PCB 89	0 040	0 01	0 01	0 01	1 0
PCB 90	0 040	0 01	0 01	0 01	1 0
PCB 101	0 040	0 01	0 01	0 01	1 0
PCB 113	0 040	0 01	0 01	0 01	1 0
PCB 92	0 040	0 01	0 01	0 01	1 0
PCB 93	0 040	0 01	0 01	0 01	1 0
PCB 100	0 040	0 01	0 01	0 01	1 0
PCB 94	0 040	0 01	0 01	0 01	1 0
PCB 95	0 040	0 01	0 01	0 01	1 0
PCB 96	0 040	0 01	0 01	0 01	1 0
PCB 98	0 040	0 01	0 01	0 01	1 0
PCB 102	0 040	0 01	0 01	0 01	1 0
PCB 99	0 040	0 01	0 01	0 01	1 0
PCB 112	0 040	0 01	0 01	0 01	1 0
PCB 103	0 040	0 01	0 01	0 01	1 0
PCB 104	0 040	0 01	0 01	0 01	1 0

Parameter	Water ng/L	Solids ng/g	Tissues ng/g	Solid Wastes ng/g	100 uL Extract ng/mL
PCB 105	0 040	0 01	0 01	0 01	1 0
PCB 106	0 040	0 01	0 01	0 01	1 0
PCB 107	0 040	0 01	0 01	0 01	1 0
PCB 108	0 040	0 01	0 01	0 01	1 0
PCB 124	0 040	0 01	0 01	0 01	1 0
PCB 110	0 040	0 01	0 01	0 01	1 0
PCB 115	0 040	0 01	0 01	0 01	1 0
PCB 111	0 040	0 01	0 01	0 01	1 0
PCB 114	0 040	0 01	0 01	0 01	1 0
PCB 118	0 040	0 01	0 01	0 01	1 0
PCB 120	0 040	0 01	0 01	0 01	1 0
PCB 121	0 040	0 01	0 01	0 01	1 0
PCB 122	0 040	0 01	0 01	0 01	1 0
PCB 123	0 040	0 01	0 01	0 01	1 0
PCB 126	0 040	0 01	0 01	0 01	1 0
PCB 127	0 040	0 01	0 01	0 01	1 0
PCB 128	0 040	0 01	0 01	0 01	1 0
PCB 166	0 040	0 01	0 01	0 01	1 0
PCB 129	0 040	0 01	0 01	0 01	1 0
PCB 138	0 040	0 01	0 01	0 01	1 0
PCB 163	0 040	0 01	0 01	0 01	1 0
PCB 130	0 040	0 01	0 01	0 01	1 0
PCB 131	0 040	0 01	0 01	0 01	1 0
PCB 132	0 040	0 01	0 01	0 01	1 0
PCB 133	0 040	0 01	0 01	0 01	1 0
PCB 134	0 040	0 01	0 01	0 01	1 0
PCB 143	0 040	0 01	0 01	0 01	1 0
PCB 135	0 040	0 01	0 01	0 01	1 0
PCB 151	0 040	0 01	0 01	0 01	1 0
PCB 136	0 040	0 01	0 01	0 01	1 0
PCB 137	0 040	0 01	0 01	0 01	1 0
PCB 164	0 040	0 01	0 01	0 01	1 0
PCB 139	0 040	0 01	0 01	0 01	1 0
PCB 140	0 040	0 01	0 01	0 01	1 0
PCB 141	0 040	0 01	0 01	0 01	1 0
PCB 142	0 040	0 01	0 01	0 01	1 0
PCB 144	0 040	0 01	0 01	0 01	1 0
PCB 145	0 040	0 01	0 01	0 01	1 0
PCB 146	0 040	0 01	0 01	0 01	1 0
PCB 147	0 040	0 01	0 01	0 01	1 0
PCB 149	0 040	0 01	0 01	0 01	1 0
PCB 148	0 040	0 01	0 01	0 01	1 0
PCB 150	0 040	0 01	0 01	0 01	1 0
PCB 152	0 040	0 01	0 01	0 01	1 0
PCB 153	0 040	0 01	0 01	0 01	1 0
PCB 168	0 040	0 01	0 01	0 01	1 0
PCB 154	0 040	0 01	0 01	0 01	1 0
PCB 155	0 040	0 01	0 01	0 01	1 0
PCB 156	0 040	0 01	0 01	0 01	1 0
PCB 157	0 040	0 01	0 01	0 01	1 0
PCB 158	0 040	0 01	0 01	0 01	1 0
PCB 159	0 040	0 01	0 01	0 01	1 0
PCB 160	0 040	0 01	0 01	0 01	1 0
PCB 161	0 040	0 01	0 01	0 01	1 0
PCB 162	0 040	0 01	0 01	0 01	1 0
PCB 165	0 040	0 01	0 01	0 01	1 0
PCB 167	0 040	0 01	0 01	0 01	1 0
PCB 169	0 040	0 01	0 01	0 01	1 0
PCB 170	0 040	0 01	0 01	0 01	1 0

Parameter	Water ng/L	Solids ng/g	Tissues ng/g	Solid Wastes ng/g	100 uL Extract ng/mL
PCB 171	0 040	0 01	0 01	0 01	1 0
PCB 173	0 040	0 01	0 01	0 01	1 0
PCB 172	0 040	0 01	0 01	0 01	1 0
PCB 174	0 040	0 01	0 01	0 01	1 0
PCB 175	0 040	0 01	0 01	0 01	1 0
PCB 176	0 040	0 01	0 01	0 01	1 0
PCB 177	0 040	0 01	0 01	0 01	1 0
PCB 178	0 040	0 01	0 01	0 01	1 0
PCB 179	0 040	0 01	0 01	0 01	1 0
PCB 180	0 040	0 01	0 01	0 01	1 0
PCB 193	0 040	0 01	0 01	0 01	1 0
PCB 181	0 040	0 01	0 01	0 01	1 0
PCB 182	0 040	0 01	0 01	0 01	1 0
PCB 183	0 040	0 01	0 01	0 01	1 0
PCB 185	0 040	0 01	0 01	0 01	1 0
PCB 184	0 040	0 01	0 01	0 01	1 0
PCB 186	0 040	0 01	0 01	0 01	1 0
PCB 187	0 040	0 01	0 01	0 01	1 0
PCB 188	0 040	0 01	0 01	0 01	1 0
PCB 189	0 040	0 01	0 01	0 01	1 0
PCB 190	0 040	0 01	0 01	0 01	1 0
PCB 191	0 040	0 01	0 01	0 01	1 0
PCB 192	0 040	0 01	0 01	0 01	1 0
PCB 194	0 040	0 01	0 01	0 01	1 0
PCB 195	0 040	0 01	0 01	0 01	1 0
PCB 196	0 040	0 01	0 01	0 01	1 0
PCB 197	0 040	0 01	0 01	0 01	1 0
PCB 200	0 040	0 01	0 01	0 01	1 0
PCB 198	0 040	0 01	0 01	0 01	1 0
PCB 199	0 040	0 01	0 01	0 01	1 0
PCB 201	0 040	0 01	0 01	0 01	1 0
PCB 202	0 040	0 01	0 01	0 01	1 0
PCB 203	0 040	0 01	0 01	0 01	1 0
PCB 204	0 040	0 01	0 01	0 01	1 0
PCB 205	0 040	0 01	0 01	0 01	1 0
PCB 206	0 040	0 01	0 01	0 01	1 0
PCB 207	0 040	0 01	0 01	0 01	1 0
PCB 208	0 040	0 01	0 01	0 01	1 0
PCB 209	0 040	0 01	0 01	0 01	1 0

The estimated minimum level (EML) is defined as the lowest concentration at which an analyte can be measured reliably with common laboratory interferences present assuming a sample is extracted at the recommended weight or volume and is carried through all normal extraction and analysis procedures The values for solids, tissues and solid wastes reflect the EMLs for Protocol 1 as described in section 11 4 If the sample is prepared by another protocol described in that section, the LCLs shown in this table are multiplied by the EML multiplier, shown in the section 11 4 table The EMLs are based on the mean plus 2 standard deviations for matrix-pooled historical blank data and calibration data obtained while performing EPA 1668A The survey period was fourteen months, ending in February 2004 Individual EMLs may be adjusted to reflect more recent data

Table 5

Concentration of Stock and Spiking Solutions Containing PCBs and Labeled Compounds

				Solution concentration (ng/mL)			
	BZ/	Standard	Catalog	Labeled compound		PAR	
PCB Congener	IUPAC	Source	Number	Stock[1]	Spiking[2]	Stock[3]	Spiking[4]
2-MoCB	1	AccuStd	S-99994-4x	---	---	4000	1 0/5 0
4-MoCB	3	AccuStd	S-99994-4x	---	---	4000	1 0/5 0
2 2'-DiCB	4	AccuStd	S-99994-4x	---	---	4000	1 0/5 0
4 4'-DiCB	15	AccuStd	S-99994-4x	---	---	4000	1 0/5 0
2,2',6-TrCB	19	AccuStd	S-99994-4x	---	---	4000	1 0/5 0
3,4,4'-TrCB	37	AccuStd	S-99994-4x	---	---	4000	1 0/5 0
2,2',6,6'-TeCB	54	AccuStd	S-99994-4x	---	---	4000	1 0/5 0
3,3',4,4'-TeCB	77	AccuStd	S-99994-4x	---	---	4000	1 0/5 0
3,4,4',5-TeCB	81	AccuStd	S-99994-4x	---	---	4000	1 0/5 0
2,2',4,6,6'-PeCB	104	AccuStd	S-99994-4x	---	---	4000	1 0/5 0
2,3,3',4 4'-PeCB	105	AccuStd	S-99994-4x	---	---	4000	1 0/5 0
2,3,4,4',5-PeCB	114	AccuStd	S-99994-4x	---	---	4000	1 0/5 0
2,3',4,4',5-PeCB	118	AccuStd	S-99994-4x	---	---	4000	1 0/5 0
2',3,4,4',5-PeCB	123	AccuStd	S-99994-4x	---	---	4000	1 0/5 0
3,3',4,4',5-PeCB	126	AccuStd	S-99994-4x	---	---	4000	1 0/5 0
2,2',4,4',6,6'-HxCB	155	AccuStd	S-99994-4x	---	---	4000	1 0/5 0
2,3,3',4,4',5-HxCB	156	AccuStd	S-99994-4x	---	---	4000	1 0/5 0
2,3,3',4,4',5'-HxCB	157	AccuStd	S-99994-4x	---	---	4000	1 0/5 0
2 3',4,4',5,5'-HxCB	167	AccuStd	S-99994-4x	---	---	4000	1 0/5 0
3,3',4,4',5,5'-HxCB	169	AccuStd	S-99994-4x	---	---	4000	1 0/5 0
2,2',3 3',4,4',5-HpCB	170	AccuStd	S-99994-4x	---	---	4000	1 0/5 0
2,2',3,4,4',5,5'-HpCB	180	AccuStd	S-99994-4x	---	---	4000	1 0/5 0
2,2',3,4',5,6,6'-HpCB	188	AccuStd	S-99994-4x	---	---	4000	1 0/5 0
2,3,3',4,4',5,5'-HpCB	189	AccuStd	S-99994-4x	---	---	4000	1 0/5 0
2 2',3 3' 5 5' 6 6'-OcCB	202	AccuStd	S-99994-4x	---	---	4000	1 0/5 0
2,3,3',4,4',5,5',6-OcCB	205	AccuStd	S-99994-4x	---	---	4000	1 0/5 0
2,2',3,3',4,4',5,5',6-NoCB	206	AccuStd	S-99994-4x	---	---	4000	1 0/5 0
2,2',3,3',4',5,5',6,6'-NoCB	208	AccuStd	S-99994-4x	---	---	4000	1 0/5 0
DeCB	209	AccuStd	S-99994-4x	---	---	4000	1 0/5 0
All other CB congeners	NA	AccuStd	S-99994-4x			4000	1 0/5 0
Labeled Internal Standards							
$^{13}C_{12}$-2-chlorobiphenyl	1L	Cambridge	EC-4908	1000	2 0/10	---	---
$^{13}C_{12}$-4-chlorobiphenyl	$3L_{12}$	Cambridge	EC-4990	1000	2 0/10	---	---
$^{13}C_{12}$-2,2'-dichlorobiphenyl	4L	Cambridge	EC-4911	1000	2 0/10	---	---
$^{13}C_{12}$-4,4'-dichlorobiphenyl	15L	Cambridge	EC-1402	1000	2 0/10	---	---
$^{13}C_{12}$-2,2',6-trichlorobiphenyl	19L	Cambridge	EC-4909	1000	2 0/10	---	---
$^{13}C_{12}$-3,4,4'-trichlorobiphenyl	37L	Cambridge	EC-4901	1000	2 0/10	---	---
$^{13}C_{12}$-2,2',6,6'-tetrachlorobiphenyl	54L	Cambridge	EC-4912	1000	2 0/10	---	---
$^{13}C_{12}$-3,3',4,4'-tetrachlorobiphenyl	77L	Cambridge	EC-1404	1000	2 0/10	---	---
$^{13}C_{12}$-3,4,4',5-tetrachlorobiphenyl	81L	Cambridge	EC-1412	1000	2 0/10	---	---
$^{13}C_{12}$-2 2',4,6,6'-pentachlorobiphenyl	104L	Cambridge	EC-4910	1000	2 0/10	---	---
$^{13}C_{12}$-2,3,3',4,4'-pentachlorobiphenyl	105L	Cambridge	EC-1420	1000	2 0/10	---	---
$^{13}C_{12}$2,3,4,4',5-pentachlorobiphenyl -	114L	Cambridge	EC-4902	1000	2 0/10	---	---
$^{13}C_{12}$-2,3',4,4',5-pentachlorobiphenyl	118L	Cambridge	EC-1435	1000	2 0/10	---	---
$^{13}C_{12}$-2',3,4,4',5-pentachlorobiphenyl	123L	Cambridge	EC-4904	1000	2 0/10	---	---
$^{13}C_{12}$-3,3',4,4',5-pentachlorobiphenyl	126L	Cambridge	EC-1425	1000	2 0/10	---	---
$^{13}C_{12}$-2,2',4,4',6,6'-hexachlorobiphenyl	155L	Cambridge	EC-4167	1000	2 0/10	---	---
$^{13}C_{12}$-2,3,3',4,4',5-hexachlorobiphenyl	156L	Cambridge	EC-1422	1000	2 0/10	---	---
$^{13}C_{12}$-2,3,3',4,4',5'-hexachlorobiphenyl	157L	Cambridge	EC-4051	1000	2 0/10	---	---
$^{13}C_{12}$-2,3',4,4',5,5'-hexachlorobiphenyl	167L	Cambridge	EC-4050	1000	2 0/10	---	---
$^{13}C_{12}$-3,3',4,4',5,5'-hexachlorobiphenyl	169L	Cambridge	EC-1416	1000	2 0/10	---	---
$^{13}C_{12}$-2,2',3,3' 4,4',5-heptachlorobiphenyl	170L	Cambridge	EC-4905	1000	2 0/10	---	---
$^{13}C_{12}$-2,2',3,4',5,6,6'-heptachlorobiphenyl	188L	Cambridge	EC-4913	1000	2 0/10	---	---
$^{13}C_{12}$-2,3,3',4,4',5,5'-heptachlorobiphenyl	189L	Cambridge	EC-1409	1000	2 0/10	---	---
$^{13}C_{12}$-2,2',3,3',5,5',6,6'-octachlorobiphenyl	202L	Cambridge	EC-1408	1000	2 0/10	---	---
$^{13}C_{12}$-2,3,3',4,4',5,5',6-octachlorobiphenyl	205L	Cambridge	EC-4199	1000	2 0/10	---	---
$^{13}C_{12}$-2,2',3,3',4,4',5,5',6-nonachlorobiphenyl	206L	Cambridge	EC-4900	1000	2 0/10	---	---
$^{13}C_{12}$-2,2',3,3',4,5,5',6,6'-nonachlorobiphenyl	208L	Cambridge	EC-1419	1000	2 0/10	---	---
$^{13}C_{12}$-2,2',3,3',4,4',5,5',6,6'-decachlorobiphenyl	209L	Cambridge	EC-1410	1000	2 0/10	---	---

Continued

PCB Congener	BZ/ IUPAC	Standard Source	Catalog Number	Solution concentration (ng/mL) Labeled compound Stock	Labeled compound Spiking	PAR Stock	PAR Spiking
Labeled Recovery Standards[5]							
$^{13}C_{12}$-2,5-dichlorobiphenyl	9L	Cambridge	EC-4165	1000	100	---	---
$^{13}C_{12}$-2,4',5-trichlorobiphenyl	31L	Wellington	MBP-31	1000	100	---	---
$^{13}C_{12}$-2,4',6-trichlorobiphenyl	32L	Cambridge	EC-4163	1000	100	---	---
$^{13}C_{12}$-2,2',5,5'-tetrachlorobiphenyl	52L	Cambridge	EC-1424	1000	100	---	---
$^{13}C_{12}$-2,2',4,5,5'-pentachlorobiphenyl	101L	Cambridge	EC-1405	1000	100	---	---
$^{13}C_{12}$-3,3',4,5,5'-pentachlorobiphenyl	127L	Cambridge	EC-1421	1000	100	---	---
$^{13}C_{12}$-2,2',3,4,4',5'-hexachlorobiphenyl	138L	Cambridge	EC-1436	1000	100	---	---
$^{13}C_{12}$-2,2',3,4 4' 5,5'-heptachlorobiphenyl	180L	Cambridge	EC-1407	1000	100	---	---
$^{13}C_{12}$-2,2' 3,3' 4 4',5,5'-octachlorobiphenyl	194L	Cambridge	EC-1418	1000	100	---	---
Cleanup Standards[6]							
$^{13}C_{12}$-2,4,4'-trichlorobiphenyl	28L	Cambridge	EC-1413	5000	2 0/10	---	---
$^{13}C_{12}$-2,3,3',5,5'-pentachlorobiphenyl	111L	Cambridge	EC-1415	5000	2 0/10	---	---
$^{13}C_{12}$-2,2',3 3',5,5',6-heptachlorobiphenyl	178L	Cambridge	EC-1417	5000	2 0/10	---	---
Labeled Surrogate Standards[7]							
$^{13}C_{12}$-2,4'-dichlorobiphenyl	8L	Cambridge	EC-5095	5000	50	---	---
$^{13}C_{12}$-3,3',4,5'-tetrachlorobiphenyl	79L	Cambridge	EC-5048	5000	50	---	---
$^{13}C_{12}$-2,2',3,5',6-pentachlorobiphenyl	95L	Wellington	MBP-95	5000	50	---	---
$^{13}C_{12}$-2,2',4,4',5,5'-hexachlorobiphenyl	153L	Cambridge	EC-1406	5000	50	---	---

Notes

1 Section 7 12 5 1– prepared in nonane and diluted to prepare spiking solution

2 Section 7 12 8– prepared in acetone from stock solution Concentrations listed are for 20µL and 100µL final extract volumes

3 Section 7 12 5 – prepared in nonane and diluted to prepare spiking solution

4 Section 7 12 7– prepared in acetone from stock solution Concentrations listed are for 20µL and 100µL final extract volumes

5 Section 7 12 11– prepared in nonane and added to concentrated extract prior to injection

6 Section 7 12 9– prepared in hexane and added to extract prior to cleanup Concentrations listed are for 20µL and 100µL final extract volumes

7 Section 7 12 10– prepared in nonane and added to XAD tube prior to sampling

Table 6

Concentration of PCBs in Calibration Solutions

Analyte Type	BZ/IUPAC[1]	CS 0 5 ng/mL	CS 1 ng/mL	CS 2 ng/mL	CS 3[2] ng/mL	CS 4 ng/mL	CS 5 ng/mL
Congeners							
2-MoCB	1	0 5	1 0	5 0	50	400	2000
4-MoCB	3	0 5	1 0	5 0	50	400	2000
2,2'-DiCB	4	0 5	1 0	5 0	50	400	2000
4 4'-DiCB	15	0 5	1 0	5 0	50	400	2000
2,2',6'-TrCB	19	0 5	1 0	5 0	50	400	2000
3,4 4'-TrCB	37	0 5	1 0	5 0	50	400	2000
2,2',6,6'-TeCB	54	0 5	1 0	5 0	50	400	2000
3,3',4,4'-TeCB	77	0 5	1 0	5 0	50	400	2000
3,4,4',5-TeCB	81	0 5	1 0	5 0	50	400	2000
2,2',4,6,6'-PeCB	104	0 5	1 0	5 0	50	400	2000
2,3,3',4,4'-PeCB	105	0 5	1 0	5 0	50	400	2000
2,3,4,4',5-PeCB	114	0 5	1 0	5 0	50	400	2000
2,3',4,4',5-PeCB	118	0 5	1 0	5 0	50	400	2000
2',3,4,4',5-PeCB	123	0 5	1 0	5 0	50	400	2000
3,3',4,4',5-PeCB	126	0 5	1 0	5 0	50	400	2000
2,2',4,4',6,6'-HxCB	155	0 5	1 0	5 0	50	400	2000
2,3,3',4,4',5-HxCB	156	0 5	1 0	5 0	50	400	2000
2,3,3',4,4' 5'-HxCB	157	0 5	1 0	5 0	50	400	2000
2,3',4,4',5,5'-HxCB	167	0 5	1 0	5 0	50	400	2000
3,3',4,4',5 5'-HxCB	169	0 5	1 0	5 0	50	400	2000
2 2',3 4' 5 6 6'-HpCB	188	0 5	1 0	5 0	50	400	2000
2,3,3',4 4' 5,5'-HpCB	189	0 5	1 0	5 0	50	400	2000
2 2',3,3',5,5',6,6'-OcCB	202	0 5	1 0	5 0	50	400	2000
2,3,3',4,4',5,5',6-OcCB	205	0 5	1 0	5 0	50	400	2000
2,2',3,3',4,4',5 5',6-NoCB	206	0 5	1 0	5 0	50	400	2000
2,2',3,3',4',5,5',6,6'-NoCB	208	0 5	1 0	5 0	50	400	2000
DeCB	209	0 5	1 0	5 0	50	400	2000
All other CB congeners		0 5	1 0	5 0	50	400	2000
Labeled Congeners							
$^{13}C_{12}$-2-MoCB	1L	100	100	100	100	100	100
$^{13}C_{12}$-4-MoCB	3L	100	100	100	100	100	100
$^{13}C_{12}$-2,2'-DiCB	4L	100	100	100	100	100	100
$^{13}C_{12}$-4,4'-DiCB	15L	100	100	100	100	100	100
$^{13}C_{12}$-2,2',6-TrCB	19L	100	100	100	100	100	100
$^{13}C_{12}$-3,4,4'-TrCB	37L	100	100	100	100	100	100
$^{13}C_{12}$-2,2',6,6'-TeCB	54L	100	100	100	100	100	100
$^{13}C_{12}$-3,3',4 4'-TeCB	77L	100	100	100	100	100	100
$^{13}C_{12}$-3,4,4',5-TeCB	81L	100	100	100	100	100	100
$^{13}C_{12}$-2,2',4,6,6'-PeCB	104L	100	100	100	100	100	100
$^{13}C_{12}$-2,3,3',4,4'-PeCB	105L	100	100	100	100	100	100
$^{13}C_{12}$-2,3,4,4',5-PeCB	114L	100	100	100	100	100	100
$^{13}C_{12}$-2,3',4,4',5-PeCB	118L	100	100	100	100	100	100
$^{13}C_{12}$-2',3,4,4',5-PeCB	123L	100	100	100	100	100	100
$^{13}C_{12}$-3,3',4,4',5-PeCB	126L	100	100	100	100	100	100
$^{13}C_{12}$-2,2',4,4',6,6'-HxCB	155L	100	100	100	100	100	100
$^{13}C_{12}$-2,3,3',4 4',5-HxCB	156L	100	100	100	100	100	100
$^{13}C_{12}$-2,3 3',4,4',5'-HxCB	157L	100	100	100	100	100	100
$^{13}C_{12}$-2,3',4,4',5,5'-HxCB	167L	100	100	100	100	100	100
$^{13}C_{12}$-3,3',4,4',5,5'-HxCB	169L	100	100	100	100	100	100
$^{13}C_{12}$-2,2',3 3',4,4',5-HpCB	170L	100	100	100	100	100	100
$^{13}C_{12}$-2,2',3,4',5,6,6'-HpCB	188L	100	100	100	100	100	100
$^{13}C_{12}$-2,3,3',4,4',5,5'-HpCB	189L	100	100	100	100	100	100
$^{13}C_{12}$-2,2',3,3',5,5',6,6'-OcCB	202L	100	100	100	100	100	100
$^{13}C_{12}$-2,3,3',4,4',5,5',6-OcCB	205L	100	100	100	100	100	100
$^{13}C_{12}$-2,2',3,3',4,4',5,5',6-NoCB	206L	100	100	100	100	100	100
$^{13}C_{12}$-2,2',3,3',4',5,5',6,6'-NoCB	208L	100	100	100	100	100	100
$^{13}C_{12}$-DeCB	209L	100	100	100	100	100	100
Cleanup Standards							
$^{13}C_{12}$-2,4,4'-TriCB	28L			5 0	50	400	--
$^{13}C_{12}$-2,3,3',5,5'-PeCB	111L			5 0	50	400	--
$^{13}C_{12}$-2,2',3,3',5,5',6-HpCB	178L			5 0	50	400	--

Analyte Type	BZ/IUPAC[1]	CS 0 5 ng/mL	CS 1 ng/mL	CS 2 ng/mL	CS 3[2] ng/mL	CS 4 ng/mL	CS 5 ng/mL
Recovery Standards							
$^{13}C_{12}$-2,5-DiCB	9L	100	100	100	100	100	100
$^{13}C_{12}$-2 4',5-TriCB	31L	100	100	100	100	100	100
$^{13}C_{12}$-2,4',6-TriCB	32L	100	100	100	100	100	100
$^{13}C_{12}$-2,2' 5,5'-TeCB	52L	100	100	100	100	100	100
$^{13}C_{12}$-2,2',4',5,5'-PeCB	101L	100	100	100	100	100	100
$^{13}C_{12}$-3,3',4,5,5'-PeCB	127L	100	100	100	100	100	100
$^{13}C_{12}$-2,2',3',4,4',5'-HxCB	138L	100	100	100	100	100	100
$^{13}C_{12}$-2,2',3,4,4',5,5'-HpCB	180L	100	100	100	100	100	100
$^{13}C_{12}$-2,2',3,3',4,4',5,5'-OcCB	194L	100	100	100	100	100	100
Labeled Sampling Surrogates							
$^{13}C_{12}$-2,4'-DiCB	8L			5 0	50	400	--
$^{13}C_{12}$-3,3',4,5'-TeCB	79L			5 0	50	400	--
$^{13}C_{12}$-2,2',3,5',6-PeCB	95L			5 0	50	400	--
$^{13}C_{12}$-2,2',4,4',5,5'-HxCB	153L			5 0	50	400	--

Notes

1 Suffix "L" indicates labeled compound

2 Section 15 3, calibration verification solution

Table 7

GC Window Defining Mixture

SPB-Octyl

Congener Group	First Eluted		Last Eluted	
Mono	1	2-	3	4-
Di	4	2,2'-	15	4,4'-
Tri	19	2,2',6-	37	3,4,4'-
Tetra	54	2,2',6,6'-	77	3,3',4,4'-
Penta	104	2,2',4,6,6'-	126	3,3',4,4',5-
Hexa	155	2,2',4,4',6,6'-	169	3,3',4,4',5,5'-
Hepta	188	2,2',3,4',5,6,6'-	189	2,3,3',4,4',5,5'-
Octa	202	2,2',3,3',5,5',6,6'-	205	2,3,3',4,4',5,5',6-
Nona	208	2,2',3,3',4,5,5',6,6'-	206	2,2',3,3',4,4',5,5',6-
Deca	209	2,2',3,3',4,4',5,5',6,6'-	209	2,2',3,3',4,4',5,5',6,6'-

SPB-Octyl Resolution Test Compounds

23	2,3,5-trichlorobiphenyl
34	2',3,5-trichlorobiphenyl (2,3',5'-trichlorobiphenyl)
182	2,2',3,4,4',5,6'-heptachlorobiphenyl
187	2,2',3,4',5,5',6-heptachlorobiphenyl

Table 8

Ions Monitored for HRGC/HRMS Analysis of PCBs

Descriptor	Accurate Mass	Ion ID	Elemental Composition	Analyte
1	180 9888	Lock	C_4F_7	PFK
	188 0393	M	$C_{12}H_9{}^{35}Cl$	Mono
	190 0363	M+2	$C_{12}H_9{}^{37}Cl$	Mono
	200 0795	M	$^{13}C_{12}H_9{}^{35}Cl$	Mono-13C12
	202 0766	M+2	$^{13}C_{12}H_9{}^{37}Cl$	Mono-13C12
	222 0003	M	$C_{12}H_8{}^{35}Cl_2$	Di
	223 9974	M+2	$C_{12}H_8{}^{35}Cl^{37}Cl$	Di
	234 0406	M	$^{13}C_{12}H_8{}^{35}Cl_2$	Di-13C
	236 0376	M+2	$^{13}C_{12}H_8{}^{35}Cl^{37}Cl$	Di-13C
	255 9613	M	$C_{12}H_7{}^{35}Cl_3$	Tri
	257 9584	M+2	$C_{12}H_7{}^{35}Cl_2{}^{37}Cl$	Tri
	268 0016	M	$^{13}C_{12}H_7{}^{35}Cl_3$	Tri-13C
	269 9986	M+2	$^{13}C_{12}H_7{}^{35}Cl_2{}^{37}Cl$	Tri-13C
	280 9824	QC	C_6F_{11}	PFK
	289 9224	M	$C_{12}H_6{}^{35}Cl_4$	Tetra
	291 9194	M+2	$C_{12}H_6{}^{35}Cl_3{}^{37}Cl$	Tetra
	301 9626	M	$^{13}C_{12}H_6{}^{35}Cl_4$	Tetra-13C
	303 9597	M+2	$^{13}C_{12}H_6{}^{35}Cl_3{}^{37}Cl$	Tetra-13C
2	255 9613	M	$C_{12}H_7{}^{35}Cl_3$	Tri
	257 9584	M+2	$C_{12}H_7{}^{35}Cl_2{}^{37}Cl$	Tri
	268 0016	M	$^{13}C_{12}H_7{}^{35}Cl_3$	Tri-13C
	268 9824	Lock	C_5F_{11}	PFK
	269 9986	M+2	$^{13}C_{12}H_7{}^{35}Cl_2{}^{37}Cl$	Tri-13C
	289 9224	M	$C_{12}H_6{}^{35}Cl_4$	Tetra
	291 9194	M+2	$C_{12}H_6{}^{35}Cl_3{}^{37}Cl$	Tetra
	301 9626	M	$^{13}C_{12}H_6{}^{35}Cl_4$	Tetra-13C
	303 9597	M+2	$^{13}C_{12}H_6{}^{35}Cl_3{}^{37}Cl$	Tetra-13C
	325 8804	M+2	$C_{12}H_5{}^{35}Cl_4{}^{37}Cl$	Penta
	327 8775	M+4	$C_{12}H_5{}^{35}Cl_3{}^{37}Cl_2$	Penta
	337 9207	M+2	$^{13}C_{12}H_5{}^{35}Cl_4{}^{37}Cl$	Penta-13C
	339 9178	M+4	$^{13}C_{12}H_5{}^{35}Cl_3{}^{37}Cl_2$	Penta-13C
	359 8415	M+2	$C_{12}H_4{}^{35}Cl_5{}^{37}Cl$	Hexa
	361 8385	M+4	$C_{12}H_4{}^{35}Cl_4{}^{37}Cl_2$	Hexa
	371 8817	M+2	$^{13}C_{12}H_4{}^{35}Cl_5{}^{37}Cl$	Hexa-13C
	373 8788	M+4	$^{13}C_{12}H_4{}^{35}Cl_4{}^{37}Cl_2$	Hexa-13C
	380 9760	QC	$C_{10}F_{14}$	PFK

Ions Monitored for HRGC/HRMS Analysis of PCDDs and PCDFs

Descriptor	Accurate Mass	Ion ID	Elemental Composition	Analyte
3	325 8804	M+2	$C_{12}H_5{}^{35}Cl_4{}^{37}Cl$	Penta
	327 8775	M+4	$C_{12}H_5{}^{35}Cl_3{}^{37}Cl_2$	Penta
	337 9207	M+2	$^{13}C_{12}H_5{}^{35}Cl_4{}^{37}Cl$	Penta-13C
	339 9178	M+4	$^{13}C_{12}H_5{}^{35}Cl_3{}^{37}Cl_2$	Penta-13C
	342 9792	Lock	C_8F_{13}	PFK
	359 8415	M+2	$C_{12}H_4{}^{35}Cl_5{}^{37}Cl$	Hexa
	361 8385	M+4	$C_{12}H_4{}^{35}Cl_4{}^{37}Cl_2$	Hexa
	371 8817	M+2	$^{13}C_{12}H_4{}^{35}Cl_5{}^{37}Cl$	Hexa-13C
	373 8788	M+4	$^{13}C_{12}H_4{}^{35}Cl_4{}^{37}Cl_2$	Hexa-13C
	393 8025	M+2	$C_{12}H_3{}^{35}Cl_6{}^{37}Cl$	Hepta
	395 7995	M+4	$C_{12}H_3{}^{35}Cl_5{}^{37}Cl_2$	Hepta
	405 8428	M+2	$^{13}C_{12}H_3{}^{35}Cl_6{}^{37}Cl$	Hepta-13C
	407 8398	M+4	$^{13}C_{12}H_3{}^{35}Cl_5{}^{37}Cl_2$	Hepta-13C
	427 7635	M+2	$C_{12}H_2{}^{35}Cl_7{}^{37}Cl$	Octa
	429 7606	M+4	$C_{12}H_2{}^{35}Cl_6{}^{37}Cl_2$	Octa
	430 9728	QC	C_9F_{17}	PFK
	439 8038	M+2	$^{13}C_{12}H_2{}^{35}Cl_7{}^{37}Cl$	Octa-13C
	441 8008	M+4	$^{13}C_{12}H_2{}^{35}Cl_6{}^{37}Cl_2$	Octa-13C
4	393 8025	M+2	$C_{12}H_3{}^{35}Cl_6{}^{37}Cl$	Hepta
	395 7995	M+4	$C_{12}H_3{}^{35}Cl_5{}^{37}Cl_2$	Hepta
	404 9760	Lock	$C_{10}F_{15}$	PFK
	405 8428	M+2	$^{13}C_{12}H_3{}^{35}Cl_6{}^{37}Cl$	Hepta-13C
	407 8398	M+4	$^{13}C_{12}H_3{}^{35}Cl_5{}^{37}Cl_2$	Hepta-13C
	427 7635	M+2	$C_{12}H_2{}^{35}Cl_7{}^{37}Cl$	Octa
	429 7606	M+4	$C_{12}H_2{}^{35}Cl_6{}^{37}Cl_2$	Octa
	439 8038	M+2	$^{13}C_{12}H_2{}^{35}Cl_7{}^{37}Cl$	Octa-13C
	441 8008	M+4	$^{13}C_{12}H_2{}^{35}Cl_6{}^{37}Cl_2$	Octa-13C
	461 7246	M+2	$C_{12}H^{35}Cl_7{}^{37}Cl_2$	Nona
	463 7216	M+4	$C_{12}H^{35}Cl_6{}^{37}Cl_3$	Nona
	473 7648	M+2	$^{13}C_{12}H^{35}Cl_7{}^{37}Cl_2$	Nona-13C
	475 7619	M+4	$^{13}C_{12}H^{35}Cl_6{}^{37}Cl_3$	Nona-13C
	495 6856	M+2	$C_{12}{}^{35}Cl_8{}^{37}Cl_2$	Deca
	497 6826	M+4	$C_{12}{}^{35}Cl_7{}^{37}Cl_3$	Deca
	504 9697	QC	$C_{12}F_{19}$	PFK
	507 7258	M+2	$^{13}C_{12}{}^{35}Cl_8{}^{37}Cl_2$	Deca-13C
	509 7229	M+4	$^{13}C_{12}{}^{35}Cl_7{}^{37}Cl_3$	Deca-13C

1 Nuclidic masses used H = 1 007825 C = 12 00000 ^{13}C = 13 003355 F = 18 9984

O = 15 994915 ^{35}Cl = 34 968853 ^{37}Cl = 36 965903

Table 9

Theoretical Ion Abundance Ratios and Their Control Limits for PCBs

Chlorine Atoms	m/z's Forming Ratios	Theoretical Ratio	Lower QC Limit	Upper QC Limit
1	m/m+2	3 13	2 66	3 60
2	m/m+2	1 56	1 33	1 79
3	m/m+2	1 04	0 88	1 20
4	m/m+2	0 77	0 65	0 89
5	m+2/m+4	1 55	1 32	1 78
6	m+2/m+4	1 24	1 05	1 43
7	m+2/m+4	1 05	0 89	1 21
8	m+2/m+4	0 89	0 76	1 02
9	m+2/m+4	0 77	0 65	0 89
10	m+2/m+4	0 69	0 59	0 79

Table 10 Acceptance Criteria for Performance Tests

Toxic & LOC Congeners	IUPAC	Test Conc (ng/mL)[1]	IPR RSD (%)	IPR X (%)	OPR(LCS) (%)	VER (%)
2-chlorobiphenyl	1	50	40	60-140	50-150	70-130
4-chlorobiphenyl	3	50	40	60-140	50-150	70-130
2,2'-dichlorobiphenyl	4	50	40	60-140	50-150	70-130
4,4'-dichlorobiphenyl	15	50	40	60-140	50-150	70-130
2,2',6-trichlorobiphenyl	19	50	40	60-140	50-150	70-130
3,4,4'-trichlorobiphenyl	37	50	40	60-140	50-150	70-130
2,2',6,6'-tetrachlorobiphenyl	54	50	40	60-140	50-150	70-130
3,3',4,4'-tetrachlorobiphenyl	77	50	40	60-140	50-150	70-130
3,4,4',5-tetrachlorobiphenyl	81	50	40	60-140	50-150	70-130
2,2'4,6 6'-pentachlorobiphenyl	104	50	40	60-140	50-150	70-130
2 3 3',4,4'-pentachlorobiphenyl	105	50	40	60-140	50-150	70-130
2,3,4,4',5-pentachlorobiphenyl	114	50	40	60-140	50-150	70-130
2,3',4,4',5-pentachlorobiphenyl	118	50	40	60-140	50-150	70-130
2',3',4,4',5-pentachlorobiphenyl	123	50	40	60-140	50-150	70-130
3,3',4,4',5-pentachlorobiphenyl	126	50	40	60-140	50-150	70-130
2,2',4,4',6,6 -hexachlorobiphenyl	155	50	40	60-140	50-150	70-130
2,3,3',4,4 ,5-hexachlorobiphenyl	156	50	40	60-140	50-150	70-130
2 3',4,4',5,5'-hexachlorobiphenyl	157	50	40	60-140	50-150	70-130
2,3,3 ,4,4' 5 -hexachlorobiphenyl	167	50	40	60-140	50-150	70-130
3,3',4,4',5,5'-hexachlorobiphenyl	169	50	40	60-140	50-150	70-130
2,2',3,4'5,6,6'-heptachlorobiphenyl	188	50	40	60-140	50-150	70-130
2,3,3',4,4',5,5'-heptachlorobiphenyl	189	50	40	60-140	50-150	70-130
2,2',3,3',5,5',6,6'-octachlorobiphenyl	202	50	40	60-140	50-150	70-130
2,3,3',4,4',5,5',6-octachlorobiphenyl	205	50	40	60-140	50-150	70-130
2,2',3,3',4,4',5,5',6-nonachlorobiphenyl	206	50	40	60-140	50-150	70-130
2,2',3,3',4,5,5',6,6'-nonachlorobiphenyl	208	50	40	60-140	50-150	70-130
2 2',3,3',4,4',5,5',6 6'-decachlorobiphenyl	209	50	40	60-140	50-150	70-130
All other congeners		50	NA	NA	NA	70-130[2],40-160[3]
Labeled Internal Standards						
$^{13}C_{12}$-2-chlorobiphenyl	1L	100	50	35-135	30-140	50-150
$^{13}C_{12}$-4-chlorobiphenyl	3L	100	50	35-135	30-140	50-150
$^{13}C_{12}$-2,2'-dichlorobiphenyl	4L	100	50	35-135	30-140	50-150
$^{13}C_{12}$-4,4'-dichlorobiphenyl	15L	100	50	35-135	30-140	50-150
$^{13}C_{12}$-2,2',6-trichlorobiphenyl	19L	100	50	35-135	30-140	50-150
$^{13}C_{12}$-3,4,4'-trichlorobiphenyl	37L	100	50	35-135	30-140	50-150
$^{13}C_{12}$-2,2',6,6'-tetrachlorobiphenyl	54L	100	50	35-135	30-140	50-150
$^{13}C_{12}$-3,3',4,4'-tetrachlorobiphenyl	77L	100	50	35-135	30-140	50-150
$^{13}C_{12}$-3,4,4',5-tetrachlorobiphenyl	81L	100	50	35-135	30-140	50-150
$^{13}C_{12}$-2,2',4 6,6'-pentachlorobiphenyl	104L	100	50	35-135	30-140	50-150
$^{13}C_{12}$-2,3,3',4,4'-pentachlorobiphenyl	105L	100	50	35-135	30-140	50-150
$^{13}C_{12}$2,3,4,4',5-pentachlorobiphenyl -	114L	100	50	35-135	30-140	50-150
$^{13}C_{12}$-2,3',4,4',5-pentachlorobiphenyl	118L	100	50	35-135	30-140	50-150
$^{13}C_{12}$-2',3,4,4',5-pentachlorobiphenyl	123L	100	50	35-135	30-140	50-150
$^{13}C_{12}$-3,3',4,4',5-pentachlorobiphenyl	126L	100	50	35-135	30-140	50-150
$^{13}C_{12}$-2,2',4,4',6,6'-hexachlorobiphenyl	155L	100	50	35-135	30-140	50-150
$^{13}C_{12}$-2,3,3',4,4',5-hexachlorobiphenyl	156L	100	50	35-135	30-140	50-150
$^{13}C_{12}$-2,3,3',4,4',5'-hexachlorobiphenyl	157L	100	50	35-135	30-140	50-150
$^{13}C_{12}$-2 3',4,4',5,5'-hexachlorobiphenyl	167L	100	50	35-135	30-140	50-150
$^{13}C_{12}$-3,3',4,4',5,5'-hexachlorobiphenyl	169L	100	50	35-135	30-140	50-150
$^{13}C_{12}$-2,2',3,3',4,4',5-heptachlorobiphenyl	170L	100	50	35-135	30-140	50-150
$^{13}C_{12}$-2,2',3,4',5,6,6'-heptachlorobiphenyl	188L	100	50	35-135	30-140	50-150
$^{13}C_{12}$-2,3,3',4,4',5,5'-heptachlorobiphenyl	189L	100	50	35-135	30-140	50-150
$^{13}C_{12}$-2,2',3,3',5,5',6,6'-octachlorobiphenyl	202L	100	50	35-135	30-140	50-150
$^{13}C_{12}$-2,3,3',4,4',5,5',6-octachlorobiphenyl	205L	100	50	35-135	30-140	50-150
$^{13}C_{12}$-2,2',3,3',4,4',5 5',6-nonachlorobiphenyl	206L	100	50	35-135	30-140	50-150
$^{13}C_{12}$-2,2',3,3',4,5,5',6,6'-nonachlorobiphenyl	208L	100	50	35-135	30-140	50-150
$^{13}C_{12}$-2,2',3,3',4,4',5,5',6,6'-decachlorobiphenyl	209L	100	50	35-135	30-140	50-150
Cleanup standards						
$^{13}C_{12}$-2,4,4'-trichlorobiphenyl	28L	50	45	45-120	40-125	60-130
$^{13}C_{12}$-2,3,3',5,5'-pentachlorobiphenyl	111L	50	45	45-120	40-125	60-130
$^{13}C_{12}$-2,2',3,3',5,5',6-heptachlorobiphenyl	178L	50	45	45-120	40-125	60-130
Labeled Surrogate Standards						
$^{13}C_{12}$-2,4'-trichlorobiphenyl	8L	50	NA	NA	50-150[4]	70-130
$^{13}C_{12}$-3,3',4 5'-tetrachlorobiphenyl	79L	50	NA	NA	50-150	70-130
$^{13}C_{12}$-2,2',3,5',6-pentachlorobiphenyl	95L	50	NA	NA	50-150	70-130
$^{13}C_{12}$-2,2',4,4',5,5'-hexachlorobiphenyl	153L	50	NA	NA	50-150	70-130

1 Test concentrations are based on ng/mL in the sample extract or standard solution
2 If the concentration is within 70-130% of the test concentration then the ICAL RF is used
3 If the concentration is outside the 70-130% limit but within 40-160% of the test concentration then the VER daily RF is used

Table 11

Retention Times of Isomers on the SPB-Octyl Column for the PCB Standard Mixes[1]

PCB Congener Mix 1 (AccustandardM-1668-1)

Cl Level	BZ No.[2]	Cl Level	BZ No [2]	Cl Level	BZ No.[2]
1	2	4	78	6	161
2	10	4	81	6	153
2	9	5	96	6	130
2	6	5	103	6	129
2	8	5	95	6	166
2	14	5	88	6	159
2	11	5	89	6	167
3	30	5	92	6	156
3	27	5	113	7	179
3	32	5	83	7	176
3	34	5	119	7	178
3	26	5	87	7	175
3	31	5	85	7	183
3	33	5	82	7	177
3	36	5	120	7	171
3	38	5	124	7	172
3	35	5	106	7	191
4	50	5	122	7	170
4	45	5	105	7	190
4	52	5	127	8	200/201
4	49	6	152	8	204
4	75	6	136	8	199/200
4	41	6	148	8	198
4	72	6	151	8	196
4	57	6	144	8	195
4	63	6	143	8	194
4	66	6	142	9	207
4	79	6	133		

PCB Congener Mix 2 (Accustandard M-1668-2)

Cl Level	BZ No [2]	Cl Level	BZ No [2]	Cl Level	BZ No [2]
2	7	4	55	6	139
2	5	4	60	6	132
2	12	5	94	6	165
3	18	5	100	6	168
3	24	5	91	6	137
3	23	5	121	6	160
3	28	5	90	6	128
3	22	5	99	6	162
3	39	5	109/108	6	157
4	53	5	117	7	184
4	51	5	111	7	186
4	73	5	108/107	7	187
4	48	5	118	7	185
4	62	5	114	7	181
4	71	6	150	7	192
4	68	6	145	8	197
4	58	6	135	8	201/199
4	61	6	149	8	203

Table 11 Continued

Retention Times of Isomers on the SPB-Octyl Column for the PCB Standard Mixes[1]

PCB Congener Mix 3 (Accustandard M-1668-3)

Cl Level	BZ No [2]	Cl Level	BZ No [2]	Cl Level	BZ No [2]
2	13	4	80	6	140
3	17	5	93	6	146
3	29	5	84	6	141
3	20	5	101	6	164
4	46	5	112	6	158
4	65	5	86	7	182
4	59	5	116	7	174
4	40	5	107/109	7	173
4	67	6	154	7	193
4	76	6	147		

PCB Congener Mix 4 (Accustandard M-1668-4)

Cl Level	BZ No [2]	Cl Level	BZ No.[2]	Cl Level	BZ No [2]
3	25	4	64	5	123
3	21	4	70	6	134
4	69	5	102	6	131
4	47	5	97	6	163
4	42	5	115	7	180

PCB Congener Mix 5 (AccustandardM-1668-5)

Cl Level	BZ No.[2]	Cl Level	BZ No.[2]	Cl Level	BZ No [2]
1	1	4	74	6	169
1	3	4	56	7	188
2	4	4	77	7	189
2	15	5	104	8	202
3	19	5	98	8	205
3	16	5	125	9	208
3	37	5	110	9	206
4	54	5	126	10	209
4	43	6	155		
4	44	6	138		

Notes

1 Each congener mix is analyzed in triplicate to establish the retention times of the PCB isomers in the absence of co-eluting isomers The elution order listed here is used to assign peak identifications in the separate mixture analysis The average retention time established in the analysis of the separate mixtures is then used to establish relative retention times (See sections 10 2 3)

2 BZ/IUPAC Number, if different

Table 12

Assignment of Sample Preparation Protocols

With Associated Sample Weights, Volumes, and Concentration Factors

Estimated Concentration of Largest Congener Peak (4X Largest Congener Conc) (ng/g)	Protocol Number and Name	Sample Amount Extracted (g)	Volume of Spiking Solution Used (mL)	Extract Used (%)	Dilution Factor	EML & Calibration Range Multiplier
0-9	1 – Default, Clean	10	1	100	1	1
10-249	2 – Low Level*	10	1	100	5	5
250-1999	3 – Medium Level	5	2	50	10	40
1999-10000	4- High Level	2	4	25	10	200

* Samples extracted using protocol 2 which are from sites thought to be high in interferences may have 20% of the extract removed for cleanup The extracts will be spiked with the normal amount of cleanup standard prior to the split being performed. The remaining 80% of the sample extract will be archived. The extracts will be spiked with 20uL recovery standard and blown down to a final volume of 100uL. This procedure can be used in an effort to minimize the possible overloading of the cleanup columns

Figure 1

Recommended GC Operating Conditions

GC Type: HP 6890 GC GC ready

GC Descriptor
On Display· epa1668
In GC epa1668

	IC	GC
GC elapsed time	0 0	Min
GC run time	60 0	Min.
Stabilize time	0.5	Min.

Current GC Temperature

Injector A	Transfer Line	Column
400	400	400
300	300	300
200	200	200
100	100	100
0	0	0
270/ 270 C	280/ 280 C	75/ 75 C
Max = 270 C	Max = 280 C	Max = 280 C

Column Oven

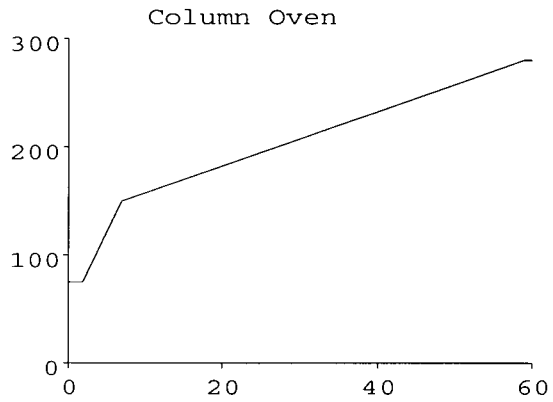

Column Constant Flow 0 9 ml/min
Inlet: Splitless Mode

Purge time	Purge flow	Saver time	Saver flow
1 5	40 0	3.0	15.0

☐ Cryo ■ Saver

Sequence No.	1		2		3		4		
Time Min	2.0		5 0		52		1 0		
Rate C/Min			15		2 5				
Temp C	75	→	75	→	150	→	280	→	280
Total Time	0	→	2 0	→	7 0	→	59	→	60

☐ START GC ☐ RESTORE ☐ LOAD ☐ CYCLE ☐ New Program

GC _

Mon Sep 11 16 42 16 2000 mat95 MAT 95

Figure 2

Recommended MID Descriptors

```
MID Set Up Parameters
 MID File                          epa1668
 Measure/lock ratio  (X)              1
 Set Damping relay   (T)          FALSE
 Width first lock    (A)           0 15 amu
 Electric jump time  (E)             10 ms
 Magnetic jump time  (D)             60 ms
 Offset              (O)            100 cts
 Electric range      (R)            300 %
 Sweep peak width    (W)           3 00
 Acq mode          (C|P)           Cent mode
 MID mode      (J|M|L|N)           Lock mode

MID  Time Windows
 #  Start  Measure  End        Cycletime
 1   8 00  15 45  23 45 min    1 00 sec
 2  23 45  14 15  38 00 min    1 00 sec
 3  38:00  13·15  51.15 min    1 00 sec
 4  51 15   8 45  60 00 min    1 00 sec
 5
 6
 7
 8
 9

 Clear Menu      Clear Times     Clear Masses
 Start MID       RESTORE         Main

MID _
```

```
MID Masses for Time Window   1
 #      mass    F int  gr time(ms)
 1    188 0393      1   1    47.79
 2    190 0363      1   1    47 79
 3    192 9888 l   10   1     4 10
 4    194 0594      1   1    47 79
 5    196 0565      1   1    47 79
 6    200 0795      1   1    47 79
 7    202 0766      1   1    47 79
 8    222 0003      1   1    47 79
 9    223 9974      1   1    47 79
10    234 0406      1   1    47 79
11    236 0376      1   1    47 79
12    255 9613      1   1    47 79
13    257 9584      1   1    47 79
14    268 0016      1   1    47 79
15    268 9824 c   10   1     4 10
16    269 9986      1   1    47 79
17    289 9224      1   1    47 79
18    291 9194      1   1    47 79
19
20
21
22
23
24

 Lock Mass   Cali Mass
```

Thu Jan 17 18 19 09 2002 mat95 MAT 95

```
MID Set Up Parameters
 MID File                          epa1668
 Measure/lock ratio  (X)              1
 Set Damping relay   (T)          FALSE
 Width first lock    (A)           0 15 amu
 Electric jump time  (E)             10 ms
 Magnetic jump time  (D)             60 ms
 Offset              (O)            100 cts
 Electric range      (R)            300 %
 Sweep peak width    (W)           3 00
 Acq mode          (C|P)           Cent mode
 MID mode      (J|M|L|N)           Lock mode

MID  Time Windows
 #  Start  Measure  End        Cycletime
 1   8.00  15 45  23 45 min    1 00 sec
 2  23 45  14 15  38 00 min    1 00 sec
 3  38 00  13 15  51 15 min    1 00 sec
 4  51 15   8 45  60·00 min    1 00 sec
 5
 6
 7
 8
 9

 Clear Menu      Clear Times     Clear Masses
 Start MID       RESTORE         Main

MID _
```

```
MID Masses for Time Window   2
 #      mass    F int  gr time(ms)
 1    255 9613      1   1    55 98
 2    257 9584      1   1    55 98
 3    268 0016      1   1    55 98
 4    268 9824 l   10   1     5 46
 5    269 9986      1   1    55 98
 6    289 9224      1   1    55 98
 7    291 9194      1   1    55 98
 8    301 9626      1   1    55 98
 9    303 9597      1   1    55 98
10    325 8804      1   1    55 98
11    327 8775      1   1    55 98
12    337 9207      1   1    55 98
13    339 9178      1   1    55 98
14    342 9792 c   10   1     5 46
15    359 8415      1   1    55 98
16    361 8385      1   1    55 98
17
18
19
20
21
22
23
24

 Lock Mass   Cali Mass
```

Thu Jan 17 18 19 14 2002 mat95 MAT 95

Figure 2 Continued

Recommended MID Descriptors

```
MID Set Up Parameters
 MID File                          epa1668
 Measure/lock ratio  (X)              1
 Set Damping relay   (T)          FALSE
 Width first lock    (A)           0 15 amu
 Electric jump time  (E)             10 ms
 Magnetic jump time  (D)             60 ms
 Offset              (O)            100 cts
 Electric range      (R)            300 %
 Sweep peak width    (W)           3 00
 Acq mode          (C|P)           Cent mode
 MID mode      (J|M|L|N)           Lock mode

MID  Time Windows
 #  Start  Measure  End        Cycletime
 1   8 00  15 45  23 45 min   1 00 sec
 2  23 45  14 15  38 00 min   1 00 sec
 3  38 00  13 15  51 15 min   1 00 sec
 4  51 15   8 45  60·00 min   1 00 sec
 5
 6
 7
 8
 9

Clear Menu      Clear Times      Clear Masses
Start MID       RESTORE          Main

MID  _
```

```
MID Masses for Time Window   3
 #      mass    F int  gr time(ms)
 1    325 8804      1   1     47 79
 2    327 8775      1   1     47 79
 3    337 9207      1   1     47 79
 4    339 9178      1   1     47 79
 5    342 9792 l   10   1      4 10
 6    359 8415      1   1     47 79
 7    361 8385      1   1     47 79
 8    371 8817      1   1     47 79
 9    373 8788      1   1     47 79
10    393 8025      1   1     47 79
11    395 7995      1   1     47 79
12    405 8428      1   1     47 79
13    407 8398      1   1     47 79
14    427 7635      1   1     47 79
15    429 7606      1   1     47 79
16    430 9728 c   10   1      4 10
17    439 8038      1   1     47 79
18    441 8008      1   1     47 79
19
20
21
22
23
24

Lock Mass    Cali Mass
```

Thu Jan 17 18 19 18 2002 mat95 MAT 95

```
MID Set Up Parameters
 MID File                          epa1668
 Measure/lock ratio  (X)              1
 Set Damping relay   (T)          FALSE
 Width first lock    (A)           0 15 amu
 Electric jump time  (E)             10 ms
 Magnetic jump time  (D)             60 ms
 Offset              (O)            100 cts
 Electric range      (R)            300 %
 Sweep peak width    (W)           3 00
 Acq mode          (C|P)           Cent mode
 MID mode      (J|M|L|N)           Lock mode

MID  Time Windows
 #  Start  Measure  End        Cycletime
 1   8 00  15 45  23 45 min   1 00 sec
 2  23 45  14.15  38 00 min   1 00 sec
 3  38 00  13 15  51 15 min   1 00 sec
 4  51 15   8 45  60 00 min   1 00 sec
 5
 6
 7
 8
 9

Clear Menu      Clear Times      Clear Masses
Start MID       RESTORE          Main

MID  _
```

```
MID Masses for Time Window   4
 #      mass    F int  gr time(ms)
 1    393 8025      1   1     47 79
 2    395 7995      1   1     47 79
 3    404 9760 l   10   1      4 10
 4    405 8428      1   1     47 79
 5    407 8398      1   1     47 79
 6    427 7635      1   1     47 79
 7    429 7606      1   1     47 79
 8    439 8038      1   1     47 79
 9    441 8008      1   1     47 79
10    463 7216      1   1     47 79
11    465 7187      1   1     47 79
12    475 7619      1   1     47 79
13    477 7589      1   1     47 79
14    497 6826      1   1     47 79
15    499 6797      1   1     47 79
16    504 9697 c   10   1      4 10
17    509 7229      1   1     47 79
18    511 7199      1   1     47 79
19
20
21
22
23
24

Lock Mass    Cali Mass
```

Thu Jan 17 18 19 21 2002 mat95 MAT 95

Figure 3

Example Data Review Checklist

TestAmerica Knoxville Specialty Organics Group GC/MS Initial Calibration Data Review Checklist
Method or SOP Number KNOX-ID-0013 Revision 8

PFK Date/Time:		Inst		2nd Source Filename:	

CS0.5 Filename	CS1 Filename	CS2 Filename	CS3 Filename	CS4 Filename	CS5 Filename

	Review Items	N/A	Yes	No	If No, why is data reportable?	2nd Level
1	Was the mass resolution documented before beginning the initial calibration?					
2	Was the instrument resolution ≥8,000 throughout (≥ 10,000 for m/z 342 9792) and ≥10,000 in the center of each m/z range PFK m/z 192 9888, *230 9856, and *280 9824? PFK m/z 268 9824, *292 9824, and *380 9760? PFK m/z 342 9792, *380 9760, and *430 9728? PFK m/z 404 9760, *442 9728, and *530 9665?					
3	Were the measured exact masses listed above within 5 ppm at reduced accelerating voltage?					
4	Have PCB Mixes 1 - 5 been analyzed in triplicate using the installed column to assign congener retention times, method retention times, and MID s witchpoints?					
5	Were the calibration standard solutions, at the number and concentrations specified in the Method/SOP, analyzed?					
6	Was date/time of analysis verified between analysis header and logbook as correct?					
7	Was the valley height less than 40% of the height of the shorter of the two peaks for the pair PCB 23 and PCB 34, and the pair PCB 182 and PCB 187 in the CS3 standard?					
8	Was the absolute retention time of PCB 209 greater than 55 minutes in the CS3 standard?					
9	Were the response factors calculated for each labeled standard and unlabeled native analyte using the Method/SOP specified reference compound, quantitation ions, and formula?					
10	Is the %RSD acceptable for all native analytes (within ± 20% calculated by isotope dilution, within ± 35% calculated by internal standard)?					
11	Is the %RSD acceptable (within ± 35%) for all labeled standards?					
12	Are all S/N ratios ≥10 for the GC signals in each EICP (extracted ion chromatographic profile) including internal standards (Exception Secondary native dichloro biphenyl channel m/z 223 9974)?					
13	Are the ion abundance ratios in the CS 0 5 within the control limits specified? (Exception native dichlorobiphenyls)?					
14	Were all toxic congeners uniquely resolved from non-toxic congeners?					
15	Was an ICV analyzed, calculated using the CS3 RRFs, and the %D within ± 35%)?				□ < 5 outliers, none more than ±50% D	
16	If manual integrations were performed, are they clearly identified, initialed and dated?					
17	If criteria were not met, was an NCM generated, approved by supervisor, and copy included in folder?					
18	Does the ICAL folder contain **complete** data in the following order? Data review checklist, a **complete** runlog, Avg %RSD summary, Ratio summary, Calculation summary, PFK resolution/peak match documentation (HRMS only), and Total RIC, EICP's and manual integration - for window and all standards, in order from low to high standard					

Analyst	Date	2nd Level Reviewer	Date
Comments		Comments	

*At reduced accelerating voltage

Figure 3 **Continued**

Example Data Review Checklist

TestAmerica Knoxville Specialty Organics Group GC/MS Continuing Calibration Data Review Checklist
Method or SOP Number KNOX-ID-0013 Revision 8

Start PFK.		End PFK		CS3 Filename:		Inst.		ICAL Date	

	Review Items	N/A	Yes	No	If No, why is data reportable?	2nd Level
1	Was the mass resolution documented at both the beginning and end of the 12 hour shift?					
2	Was the instrument resolution ≥8,000 throughout (≥ 10,000 for m/z 342 9792) and ≥10,000 in the center of each m/z range PFK m/z 192 9888, *230 9856, and *280 9824? PFK m/z 268 9824, *292 9824, and *380 9760? PFK m/z 342 9792, *380 9760, and *430 9728? PFK m/z 404 9760, *442 9728, and *530 9665?					
3	Were the measured exact masses listed above within 5 ppm at reduced accelerating voltage?					
4	Was date/time of analysis verified between analysis header and logbook as correct?					
5	Were the MID switchpoints set to encompass the retention time windows of each congener group?					
6	Was the valley height less than 40% of the height of the shorter of the two peaks for the pair PCB 23 and PCB 34, and the pair PCB 182 and PCB 187					
7	Was the continuing calibration performed at the beginning of the 12 hour period after successful mass resolution and GC resolution performance check?					
8	Were the %D for all toxic analytes within ± 30% (PCB 81, 77, 123, 118, 114, 105, 126, 167, 156, 157, 169, 189) Were the %D for all LOC analytes within ± 30% (PCB 1, 3, 4, 15, 19, 37, 54, 104, 155, 188, 202, 205, 206, 208, 209)					
9	Were the %D for all non-toxic/non LOC analytes within ± 30%?					
10	If the %D for any non-toxic/non-LOC was not within ± 30, were response factors calculated from the continuing calibration for all non-toxic/non-LOC analytes with a %D greater than ± 30% but within ± 60%					
11	Were the response factors calculated for each labeled standard and unlabeled native analyte using the SOP specified reference compound, quantitation ions, and formula					
12	Were the absolute retention times of all labeled internal standards within ± 15 seconds of the retention times obtained during initial calibration?					
13	Are %D within ± 50% for all labeled internal standards in the calibration?					
14	Are the %D within ± 30% for all labeled surrogate standards in the calibration					
15	Are the %D within -40/+30% for all labeled cleanup standards in the calibration?					
16	Are all S/N ratios ≥10 for the GC signals in each EICP (extracted ion chromatographic profile) including internal standards?					
17	Are RRTs of all unlabled toxic/LOC analytes within their respective RRT limits?					
18	If PCB 156 and 157 were classified as uniquely resolved in the most recent initial calibration, was the valley between the two less than or equal to the 50% of the height of the shorter of the two peaks?					
19	Are the ion abundance ratios for all labeled and unlabeled analytes within the specified control limits?					
20	If manual integrations were performed, are they clearly identified, initialed and dated?					
21	If criteria were not met, was a NCM generated, approved by supervisor, and copy included in folder?					
22	Does the CCAL folder contain **complete** data in the following order? Data review checklist, a **complete** runlog, CCAL summary, Ratio summary, Calculation summary, PFK resolution/peak match documentation (HRMS only), and Total RIC, EICP's and manual integration - for window and both standards					

Analyst	Date:	2nd Level Reviewer	Date
Comments		Comments	

*At reduced accelerating voltag

Figure 3 **Continued**

Example Data Review Checklist

TestAmerica Knoxville SOG GC/MS Data Review/Narrative Checklist Lot #_____
SOP Number KNOX-ID-0013 Revision 8 Page 1 of 1 Batch #_____

Review Items **A Initial Calibration**	**N/A**	**Yes**	**No**	**Why is data reportable?**	**2nd**
1 Was the correct ICAL used for quantitation? (Check 1-2 compounds for batch by manually calculating concentration using the ICAL avg RF)					
B Continuing Calibration	**N/A**	**Yes**	**No**		**2nd**
1 Has a Continuing Calibration Checklist been completed for each analytical batch?					
C Client Sample AND QC Sample Results	**N/A**	**Yes**	**No**		**2nd**
1 Were all special project requirements met?				See narrative	
2 Were the header information, prep factors, and dilution factors verified?					
3 Is logbook date/time of analysis correct?					
4 Sample analyses done within preparation and analytical holding time (HT)? *If no list samples* _____				☐ HT expired upon receipt ☐ Client requested analysis after HT expired ☐ Re-extraction done after HT expired	
5 Are internal standards within QC limits? *If no, list samples and reason (e.g* **sur1***)* Sample Reason Sample Reason _____ _____ _____ _____ _____ _____ _____ _____ _____ _____ _____ _____				☐ **[sup]** Ion suppression due to matrix ☐ **[low]** Low recovery S/N >10 and EDL<ML ☐ **[sam]** Not enough sample to re-extract ☐ **[dil]** Dilution showed acceptable %R ☐ **[mtx]** Obvious matrix interference Further cleanup not possible	
6 Were peaks ≥2 5 S/N, which did not meet the following criteria, properly calculated and reported as EMPCs? • All analytes within Method/SOP retention time criteria and both ions maximized within ±2 seconds • The ion abundance ratios for all labeled and unlabeled analytes within the specified control limits					
7 Are all results < the upper calibration level? *If no, list samples* _____				☐ Sample extracted at lowest possible volume	
8 If manual integrations were performed, are they clearly identified, initialed and dated?					
9 Final report acceptable? (Results correct, DLs calculated correctly, units correct, IS %R correct, appropriate flags used, dilution factor correct, and extraction/ analysis dates correct)					
10 Was a narrative prepared and all deviations noted?					
D Preparation/Matrix QC	**N/A**	**Yes**	**No**	**Why is data reportable?**	**2nd**
1 LCS done per prep batch and all LCS/LCSD recoveries and RPDs within QC limits? *If no, list ID(s)* _____				☐ MS/MSD %R, internal standards & surrogates %R in samples good indicating that problem was confined to the LCS	
2 Method blank done per prep batch and method blank or instrument blank analyzed with each sequence?					
3 Method blank internal standard recoveries within QC limits? *If no, list blank ID* _____				☐ Internal standards are high and blank is free of contaminants ☐ Internal standards are low, blank is free of contaminants, S/N>10 and EDL<EML	
4 Are all analytes present in the method blank ≤ EML? *If no list blank ID* _____				☐ Sample results are > 20x higher than blank ☐ No affected analytes > RL in the samples ☐ Not enough sample for re-extraction	
5 MS/MSD done per batch and are all recoveries and RPDs within laboratory generated QC limits? *If no, list MS/MSD ID* _____				☐ LCS acceptable indicating sample matrix effects ☐ LCS acceptable, high analyte concentration ☐ LCS acceptable, lack of sample homogeneity	
E Other	**N/A**	**Yes**	**No**		**2nd**
1 Are all nonconformances documented appropriately and copy included with deliverable?					

Analyst	**Date**	**Analyst**	**Date**
Comments		**Comments**	

Figure 4

Analysis of PCB's by HRGC/HRMS

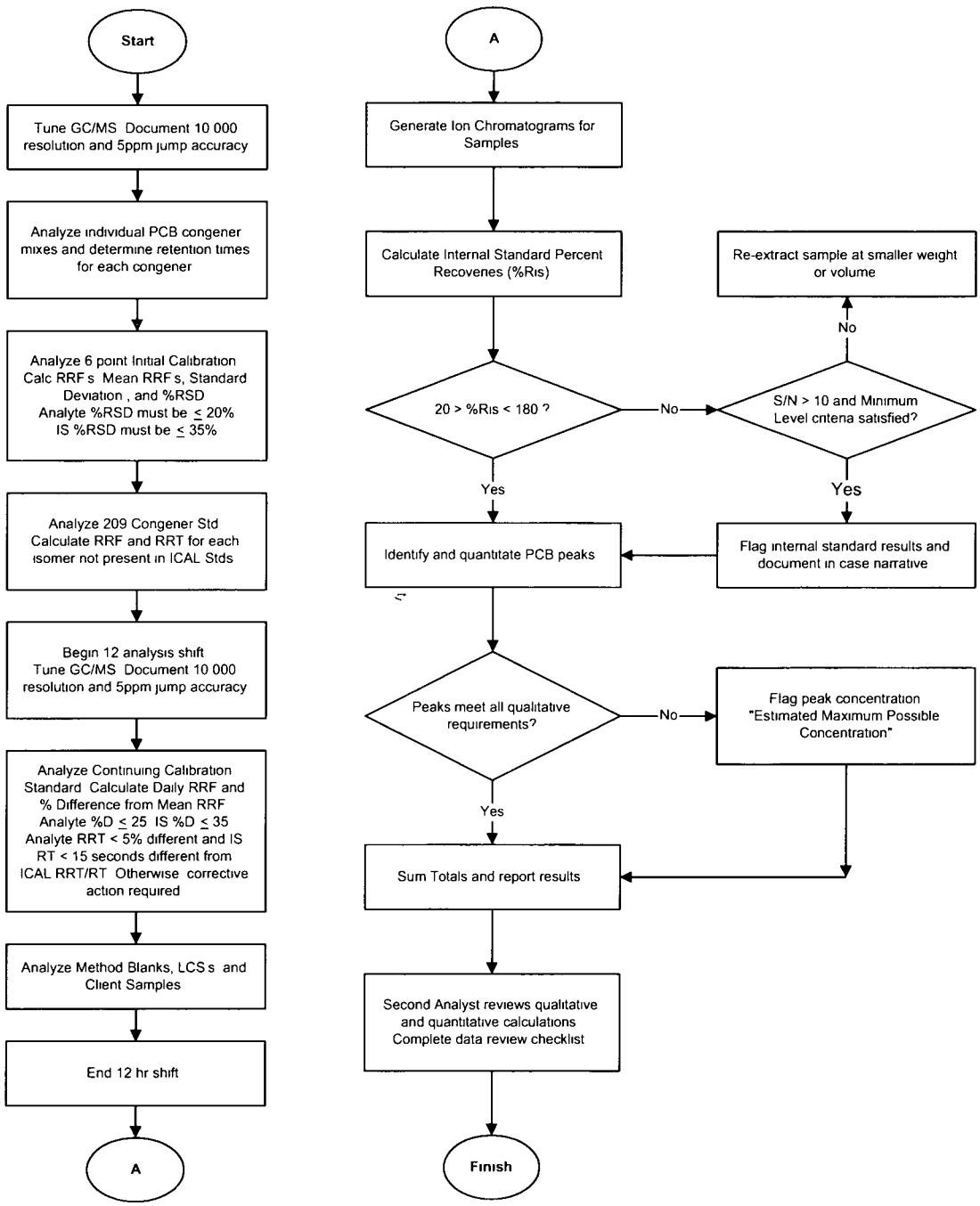

Attachment 13

PT-QA-022: Equipment and Instrument Maintenance

TestAmerica
THE LEADER IN ENVIRONMENTAL TESTING

Title: EQUIPMENT AND INSTRUMENT MAINTENANCE

Method(s): NA

Approvals (Signature/Date):

	10/7/2009		10/7/2009
Larry Matko Laboratory Director	Date	Steve Jackson Health & Safety Manager / Coordinator	Date
	10/08/08		
Nasreen K DeRubeis Quality Assurance Manager	Date		

Copyright Information: This documentation has been prepared by TestAmerica Analytical Testing Corp and its affiliates ("TestAmerica"), solely for their own use and the use of their customers in evaluating their qualifications and capabilities in connection with a particular project The user of this document agrees by its acceptance to return it to TestAmerica upon request and not to reproduce, copy, lend, or otherwise disclose its contents, directly or indirectly, and not to use if for any other purpose other than that for which it was specifically provided The user also agrees that where consultants or other outside parties are involved in the evaluation process, access to these documents shall not be given to said parties unless those parties also specifically agree to these conditions

THIS DOCUMENT CONTAINS VALUABLE CONFIDENTIAL AND PROPRIETARY INFORMATION. DISCLOSURE, USE OR REPRODUCTION OF THESE MATERIALS WITHOUT THE WRITTEN AUTHORIZATION OF TESTAMERICA IS STRICTLY PROHIBITED THIS UNPUBLISHED WORK BY TESTAMERICA IS PROTECTED BY STATE AND FEDERAL LAW OF THE UNITED STATES. IF PUBLICATION OF THIS WORK SHOULD OCCUR THE FOLLOWING NOTICE SHALL APPLY:

©COPYRIGHT 2008 TESTAMERICA ANALYTICAL TESTING CORP. ALL RIGHTS RESERVED.

1. PURPOSE

1 1 This document outlines the procedures involved in the routine laboratory equipment maintenance program for all major instrumentation Laboratory Instrument Maintenance Logbooks are assigned to detail and document the service of all equipment included within this program

2. SCOPE

2 1 To be enforced and followed throughout the laboratory

3. SAFETY

3 1 There are no specific safety hazards associated with this SOP

3 2 During the course of performing this procedure it may be necessary to go into laboratory areas to consult with appropriate staff members, therefore employees performing this procedure must be familiar with the Laboratory Health & Safety Plan, and take appropriate precautions and wear appropriate attire and safety glasses

4. DEFNITIONS

4 1 Refer to the glossary in the Pittsburgh Laboratory Quality Assurance Manual (PT-LQAM)

5. PROCEDURES

5 1 Each instrument is uniquely identified An equipment and instrument list is maintained and can be accessed in the QA files N \QA\01_Facility_QA_Documents\18 INSTRUMENT CAL & SERVICE This list includes but not limited to the following Instrument type, manufacturer, Model number or serial number, purchase date and autosampler

5 2 Manufacturer instructions should be available for instrument/equipment where applicable

5 3 Routine Maintenance Procedures

5 3 1 Routine instrument maintenance schedules are included in the in Tables -1 through 12 These schedules may either be available in the laboratory in

proximity to the instrument(s) to which they apply or attached to the instrument maintenance logbook for reference or can be accessed through this SOP in the QA web page \\pitsvr01\sops\QA_Web_Page\default htm

5 3 2 For GC and GC/MS instruments, it is desirable that most operators be experienced in performing routine maintenance procedures (e g , changing consumable parts, cleaning the instrument, purging carryover contamination, changing vacuum pump oil, cleaning quadrapole rods, etc) This program ensures minimal downtime as well as proper performance Laboratory instrument maintenance logbooks are assigned to detail and document the service of all equipment included within this program

5 3 3 Routine maintenance procedures allow the laboratory workload to be scheduled around planned downtime

5 4 Documentation

5 4 1 Logbooks must be kept for each major piece of equipment used in the laboratory Each logbook is given a unique identification The following information will be included

5 4 1 1 A brief description of the problem

5 4 1 2 A brief description of the corrective action taken to resolve the problem

5 4 1 3 The date the maintenance was performed

5 4 1 4 The analyst's initials

5 4 1 5 The date the instrument was returned to analytical control, including documentation (i e , run number(s)/file ID from a successful calibration or batch number of successful analysis)

NOTE This documentation is required in the event of a significant failure and/or major maintenance which would require instrument tag-out, etc to demonstrate that the instrument was successfully returned to analytical control

5 4 2 The logbook also includes a brief description of any work done on the instrument by a service technician and the date the instrument was serviced

5 4 3 Service records must be taped to the instrument maintenance logbooks with date and initials across the tape and the logbook

5 4 4 **NOTE** Septa and liner changes for GC and GC/MS are not required to be documented in the maintenance logbooks

5 5 Any deviations from this procedure must be documented as a nonconformance, with a cause and corrective action described

5 6 Operator Training

5 6 1 All laboratory analysts receive proper training in the operation of applicable instruments prior to actual sample analyses This training routinely combines attendance at various instrument manufacturer's operating training classes and seminars with the mandatory actual in-laboratory instruction and supervision by the Group Leader or area Manager This training is augmented and updated as appropriate

6. RESPONSIBILITIES

6 1 It is the responsibility of the employee to perform the procedure described herein in full compliance with this SOP

6 2 It is the responsibility of the Laboratory Director and departmental Supervisor of this facility to ensure that the procedure described herein is performed in full compliance with this SOP It is also their responsibility to supply adequate training, materials, and equipment to enable the employee to perform this SOP correctly

7. REFERENCES/CROSS-REFERENCES

7 1 2003 National Environmental Laboratory Accreditation Conference (NELAC) standards and ISO/IEC Guide 17025 (1999)

7 2 TestAmerica Pittsburgh Laboratory Quality Assurance Manual (PT-LQAM), current revision

7 3 Laboratory Specific Technical Method SOPs for Metals, Wet Chem, GC and GCMS The technical Method SOPs are posted to QA web page \\pitsvr01\sops\QA_Web_Page\default htm

7 4 SOP# PT-QA-029, DoD QSM 4 1 Requirements

8. ATTACHMENTS

8 1 Appendix 1, Example Maintenance log, this logbook format is used throughout the lab except for GCMS BNA Group

8 2 Appendix 2, Example Maintenance log, GCMS BNA

8 3 Appendix 3, Example Equipment and Instrument List

8 4 Tables 1 through 13 - Instrument/Equipment Maintenance

9. REVISION HISTORY

9 1 Updated format to new TestAmerica SOP format Changed document number from PITT-QA-0022 to PT-QA-022 Updated to current practice Removed maintaining extensive spare parts/ or spare part list Added maintenance documentation to include return to control

9 2 Revision 3, 10/7/2009

9 2 1 Update Safety section to new Corporate text

9 2 2 Updated Appendix 3, the Equipment and Instrument List to reflect the additional equipment/instruments added since the 10/31/07 revision of this SOP

9 2 3 Updated ICP/MS Table 1 to reflect current maintenance practices

9 2 4 Updated Hg Table 3 to be consistent with method SOPs

9 2 5 Updated GC Table 4 to reflect current maintenance practices

9 2 6 Updated GC/MS Table 5 to reflect current maintenance practices

9 2 7 Updated HPLC Table 6 to reflect current maintenance practices

9 2 8 Added Table 7 for Organic Prep, inorganic prep and TCLP maintenance procedures These procedures were removed from the Wet Chem Table and placed in this Table

9 2 9 The Wet Chem Table 7 became Table 8, no changes to the maintenance

9 2 10 The AlpChem Auto Analyzer Table 8 became Table 9, made the necessary changes to the maintenance table

9 2 11 The AlpChem FS3000 (1677 Available Cyanide) Table 9 became Table 10, made the necessary changes to the maintenance table

9 2 12 The Konelab Table 10 became Table 11, made the necessary changes to the maintenance table

9 2 13 The Ion Chromatography Table 11 became Table 12, made the necessary changes to the maintenance table

9 2 14 The TOC Analyzer Table 12 became Table 13, no changes to the maintenance

Appendix 1 - Example Maintenance log

STL - Pittsburgh

Instrument
MAINTENANCE LOG
Instrument ID: Test

LOGBOOK ID: MV1[illegible]

1) Analyst Date:

Reason for Maintenance. (circle one) Problem/Routine Maintenance (If a problem necessitated the maintenance, please describe.)

Action Taken. (Discuss what was cleaned, repaired, or replaced.) Date

Proof that the instrument is operating properly (ex. Reference a passing calibration curve and/or QC Standards.) Date.

2) Analyst Date:

Reason for Maintenance. (circle one) Problem/Routine Maintenance (If a problem necessitated the maintenance, please describe.)

Action Taken. (Discuss what was cleaned, repaired, or replaced.) Date

Proof that the instrument is operating properly (ex. Reference a passing calibration curve and/or QC Standards.) Date.

printed on: 12-Jun-07 4:35:31 PM

Page 1 of 8 Name7

Appendix 2 - Example Maintenance log, GCMS BNA

Instrument Maintenance Log																	Month:	Year:
Instrument ID					Action(s) Taken									Instrument Back In-Control				
	Initials	Date	Reason for Maintenance-Routine (R)/ Problem (P)	If (P) Describe Problem (Otherwise check the options listed under Actions Taken)	CL	CC	CGS	RC	CS	CPO	SIP	O	Describe Action(s) Taken	Analysis Date	DFTPP/File ID	CCAL/File ID	ICAL/File ID
1																	
2																	
3																	
4																	
5																	
6																	
7																	

Key	Comments.
CL=Changed Injection Liner	1
CC=Clipped Column	2
CGS=Change Gold Seal	3
RC=Replaced Column	4
CS=Cleaned Source	5
CPO=Changed Pump Oil	6
SIP=Swab Injection Port	7
O=Other	8

Appendix 3 – Equipment and Instrument List

Instrument Type	Manufacturer	Model Number	Serial Number	Year Put into Service	Condition When Received
GC w/ Dual ECD	Hewlett-Packard Lab ID GC1	6890	US00024872	1998	
GC w/ Dual ECD with EPC	Hewlett-Packard Lab ID GC2	5890A	3235A48356	1991	
GC w/ Dual ECD	Hewlett-Packard Lab ID GC3	5890II	2618A07923	2005	Used
GC w/ Dual ECD	Hewlett-Packard Lab ID GC4	5890E	3118A35332	1989	
GC w/ Dual NPD	Hewlett-Packard Lab ID GC5	6890A	US00025516	1998	
GC w/ Dual FPD	Hewlett-Packard Lab ID GC6	6890N	US10145113	2001	
GC w/ Dual ECD	Hewlett-Packard Lab ID GC8	6890	US00023401	1998	
GC w/ Dual ECD	Hewlett-Packard Lab ID GC10	6890N	US10145114	2001	
GC w/ Dual ECD	Hewlett-Packard Lab ID GC12	6890N	US10237038	2002	
GC w/ Dual ECD	Hewlett-Packard Lab ID GC14	6890	US00026141	2005	Used
GC w/ Dual ECD	Hewlett-Packard Lab ID GC15	6890N	US10403014	2006	Used
GC w/ Dual ECD	Hewlett-Packard Lab ID old GC3	5890II	2950A27000	2001	
HPLC (UV and Fluorescence)	Hewlett-Packard Lab ID GC7	1100	US53600346	1998	
Balance	Mettler Lab ID 119696	AE200	119696		
Hydrogen Generator	Parker Balston			2005	
Hydrogen Generator	Parker Balston	H2-800	H2800104C	2006	
Nitrogen	Parker Balston			2005	

Appendix 3 – Equipment and Instrument List

Instrument Type	Manufacturer	Model Number	Serial Number	Year Put into Service	Condition When Received
Generator					
GC/MS	Hewlett-Packard Lab ID HP3	6890 (GC) 5973 (MSD)	US00009844 (GC) US72020964 (MSD)	1997	New
Concentrator	OI Analytical	Eclipse	D617466100P	2006	New
GC/MS	Hewlett-Packard Lab ID HP4	6890 (GC) 5973 (MSD)	US00010799 (GC) US72821085 (MSD)	1998	New
Concentrator	OI Analytical	Eclipse	D616466032P	2006	New
GC/MS	Hewlett-Packard Lab ID HP5	6890 (GC) 5973 (MSD)	US00023292 (GC) US82322212 (MSD)	1998	New
Concentrator	OI Analytical	Eclipse	D616466026P	2006	New
GC/MS	Hewlett-Packard Lab ID HP6	6890 (GC) 5973 (MSD)	US00030465 (GC) US92522786 (MSD)	1999	New
Concentrator	OI Analytical	Eclipse	B414466952P	2006	New
GC/MS	Hewlett-Packard Lab ID HP7	6890 (GC) 5973 (MSD)	US00028345 (GC) US91411730 (MSD)	2005	Used
Concentrator	OI Analytical	Eclipse	D617466098P	2006	New
GC/MS	Hewlett-Packard Lab ID HP8	6890 FID	US00001295 (GC) 3526I01420 (Headspace)	2001	New
Oven	Fisher Scientific Lab ID VOA Glassware Oven	625G	503N0042	2005	New
Balance	Sartorius Lab ID 40019078	B120S	40019078		
GC/MS	Hewlett-Packard Lab ID 71	6890 (GC) 5973 (MSD)	US00029391 (GC) US91422511 (MSD)	1999	New
GC/MS	Hewlett-Packard Lab ID 722	6890 (GC) 5973 (MSD)	US00029396 (GC) US91922512 (MSD)	1999	New
GC/MS	Hewlett-Packard Lab ID 731	6890 (GC) 5973 (MSD)	US00031329 (GC) US93112052 (MSD)	2000	New
GC/MS	Hewlett-Packard Lab ID 732	6890N (GC) 5973 (MSD)	CN10426047 (GC) US41746674 (MSD)	2004	New
GC/MS	Hewlett-Packard Lab ID 733	6890 (GC) 5972 (MSD)	US91411735 (MSD) US00028233 (GC)	2005	Used
GC/MS	Hewlett-Packard	6890 (GC)	US 71410457	2002	Used

Appendix 3 – Equipment and Instrument List

Instrument Type	Manufacturer	Model Number	Serial Number	Year Put into Service	Condition When Received
	Lab ID APEX	5973 (MSD)	(MSD) US00007984 (GC)		
GC/MS	Hewlett-Packard Lab ID MSD7	6890 (GC) 5972 (MSD)	US80210935 (MSD) DE00020249 (GC)	2002	Used
ICP	Thermo Jarrell Ash Lab ID JA61EICP	61E ICAP	38190	1992	New
ICP	Thermo Jarrell Ash Lab ID TRACEICP	61E Trace	209390	1993	New
ICP	Thermo Jarrell Ash Lab ID TRACEICP2	61E Trace	11097	2001	New
ICP/MS	Thermo Electron Lab ID ICPMS	X-Series ICPMS	X0225	2003	New
ICP/MS	Thermo Electron Lab ID ICPMS2	X Series ICPMS	X0344	2006	Used
Mercury Analyzer	Leeman Labs Lab ID HGHYDRA	Hydra	3009	2003	New
Autoclave	Consolidated Stills & Sterilizers Lab ID Hg Autoclave	L-Y	1392	1992	
Waterbath	Fisher Scientific Lab ID Hg Waterbath	Isotemp 228	011N0286	2004	New
Metals Digestion Block	Environmental Express Lab ID H_2O #1	Hot Block		2003	New
Metals Digestion Block	Environmental Express Lab ID H_2O #2	Hot Block		2003	New
Metals Digestion Block	Environmental Express Lab ID H_2O #3	Hot Block		2000	New

Appendix 3 – Equipment and Instrument List

Instrument Type	Manufacturer	Model Number	Serial Number	Year Put into Service	Condition When Received
Metals Digestion Block	Environmental Express Lab ID H_2O #4	Hot Block		2003	New
Metals Digestion Block	Environmental Express Lab ID H_2O #5	Hot Block		2003	New
Metals Digestion Block	Environmental Express Lab ID H_2O #6	Hot Block		2000	New
Metals Digestion Block	Environmental Express Lab ID Soil #1	Hot Block		2003	New
Metals Digestion Block	Environmental Express Lab ID Soil #2	Hot Block		2003	New
Metals Digestion Block	Environmental Express Lab ID Soil #3	Hot Block		2003	New
Metals Digestion Block	Environmental Express Lab ID Soil #4	Hot Block		2003	New
Metals Digestion Block	Environmental Express Lab ID Soil #5	Hot Block		2003	New
Metals Digestion Block	Environmental Express Lab ID Soil #6	Hot Block		2003	New
Balance	Mettler Lab ID C94817	PE3600	C94817		
Balance	Fisher Lab ID 6131	7240DA	18198		
Ion Chromatograph	Dionex	IC 25	00040396	2000	New
Autoanalyzer	OI Analytical	Alpkem Flow Solution IV	928893438	1998	New
Autoanalyzer	OI Analytical	Alpkem Flow Solution IV	928893439	1998	New

Appendix 3 – Equipment and Instrument List

Instrument Type	Manufacturer	Model Number	Serial Number	Year Put into Service	Condition When Received
UV/VIS	Beckman Coulter	DU640	4325089	2000	Used
UV/VIS	Milton Roy	Genesys5	3V08239002	2003	Used
UV/VIS	Milton Roy	SPEC-21D	3155215007	1994	New
UV/VIS	Thermo Electron Corp	GENESYS 10 335900-000	2D5K278001	2007	New
Midi Distillation Blocks	Westco Scientific	Easy Dist		2000	New
Midi Distillation Blocks	Westco Scientific	Easy Dist		2000	New
Midi Distillation Blocks	Westco Scientific	Easy Dist		2001	New
Midi Distillation Blocks	Westco Scientific	Easy Dist		2005	New
pH meter	Fisher Scientific	AR25	AR93315378	2004	New
pH meter	Fisher Scientific	AR25	AR93312320	1990	New
pH meter	Fisher Scientific	AR25	AR 81202030	2003	New
pH meter	Fisher Scientific	XL25	94003394	2007	New
Autotitrator	Man-Tech Associates	PC-Titration Plus	MS0A3-329	2003	New
MultiMeter	Myron L Co	Ultrameter 6P	616555		New
Oven	Thermolyne	6000			New
Oven	Blue M Electric Co Lab ID Oven #2	OV-18A	OV1-15300		New
Oven	Fisher Scientific Lab ID OV02	Isotemp 630G	001O0035		New
Oven	Precision Scientific Lab ID OV08	18EG	10AV-9		New
Oven	Fisher Lab ID ZHE Oven	Isotemp Oven Model 301			
COD Reactor	HACH	DRB200	1131194	2005	New
COD Reactor	HACH	45600	020300022933	2002	New

Appendix 3 – Equipment and Instrument List

Instrument Type	Manufacturer	Model Number	Serial Number	Year Put into Service	Condition When Received
TOC Analyzer	OI Analytical Lab ID 1010	1010	5108710555	2001	New
TOC Analyzer	OI Analytical Lab ID 1030	Aurora 1030	E717730273	2007	New
TOC (Lloyd Kahn Method) Analyzer	Thermo Electron Corp	Flash EA 112 MAS 200R NC Soil Analyzer	20057159-20057135	2006	New
Autoanalyzer	Thermo Clinical Labsystems Lab ID KONELAB-1	Aqua 200	A0619933	2005	New
Method 1677 Autoanalyzer	OI Analytical FS3000	A0001604	135804017	2001	New
Method 1677 Autoanalyzer	OI Analytical FS3000	A0001604	120804293	2007	Used
BOD Meter	YSI	52	03L0794	2004	New
BOD Meter	YSI	50B	91K033593	2003	New
Flashpoint Tester	Rapid Tester Lab ID SETA-1	RT-00001	024149	2002	New
Flashpoint Tester	Petrotest Pensky Martin	PMA-4	0741043006	2004	New
Flashpoint Tester	Fisher Scientific	K-16200	2501		
Turbidimeter	HF Scientific Inc	Micro 100	105034		
Speed Vap II	Horizon	Speed Vap # 9000	01-0333	2001	New
Speed Vap II	Horizon	Speed Vap # 9000	01-0332	2001	New
Hotplate	Thermolyne Lab ID #2	Cimarec 3	611941237080		Used
Hotplate	Thermolyne Lab ID #3	Cimarec 3	1073390872643		Used
Hotplate	Thermolyne Lab ID #1	Cimarec 3	1073010868586	2005	New
Waterbath	Thermo Electron Corp	Precision 2872	202471	2007	New

Appendix 3 – Equipment and Instrument List

Instrument Type	Manufacturer	Model Number	Serial Number	Year Put into Service	Condition When Received
Centrifuge	Damon/IEC Division Lab ID CENT-3	CU-5000	33473227		
Balance	Mettler Lab ID 1126472457	PB602	1126472457	2005	New
Balance	Sartorius Lab ID 37110039	A210P	37110039	2003	New
Balance	Mettler Lab ID G76383	AE240	G76383		
Balance	Fisher Lab ID 25606	S-400	25606		
Balance	Mettler Lab ID AB204S	AB204S	1126020829	2005	New
Balance	A & D Lab ID GR-200	GR-200	14224939	2007	New
Sonicator	Fisher Scientific	550 Sonic Dismembrator	F2099	1985	
Concentrator	Meyer	N-Evap 112	5376		
Concentrator	Meyer	N-Evap 115	9217		
Concentrator	Horizon Lab ID 1	Dry Vap	227253	2006	New
Concentrator	Horizon Lab ID 2	Dry Vap	227254	2006	New
Concentrator	Horizon Lab ID 3	Dry Vap	227255	2006	New
Concentrator	Horizon Lab ID 4	Dry Vap	227256	2006	New
Gel Permeation Chromatograph	J2 Scientific	Autoinject 110	084/12298	2001	
Soxtherm Extractor	Gerhardt Lab ID 1	SE-3A/S306A	4012404	2002	New
Soxtherm Extractor	Gerhardt Lab ID 7	SE-3A/S306A	4012399	2002	New
Soxtherm	Gerhardt	SE-3A/S306A	4012398	2002	New

Appendix 3 – Equipment and Instrument List

Instrument Type	Manufacturer	Model Number	Serial Number	Year Put into Service	Condition When Received
Extractor	Lab ID 6				
Soxtherm Extractor	Gerhardt Lab ID 5	SE-3A/S306A	4012403	2002	New
Soxtherm Extractor	Gerhardt Lab ID 4	SE-3A/S306A	4012402	2002	New
Soxtherm Extractor	Gerhardt Lab ID 2	SE-3A/S306A	4012401	2002	New
Soxtherm Extractor	Gerhardt Lab ID 3	SE-3A/S306A	4012400	2002	New
Soxtherm Extractor	Gerhardt Lab ID 8	SE-3A/S306A	4002039	2002	New
Soxtherm Extractor	Gerhardt Lab ID 9	SE-3A/S306A	4020237	2007	Used
Electric Kiln	Cress	FTX-27P	46053	1992	
Electric Oven	Wilt Industries	A85		1999	
TCLP Tumbler	Associated Design & Manufacturing Co Lab ID T-8	6004-0590	1788		
ZHE Rotator	Associated Design & Manufacturing Co Lab ID Z1	3740-8-BRE	1223		
ZHE Rotator	Bodine (Associated Design) Lab ID Z2	362RA9018			
ZHE Rotator	Bodine Electric Co Lab ID Z3/Z5	42R5BFC1-E3			
ZHE Rotator	Bodine (Associated Design) Lab ID Z4	34R4BFC1-5R			

Appendix 3 – Equipment and Instrument List

Instrument Type	Manufacturer	Model Number	Serial Number	Year Put into Service	Condition When Received
TCLP Tumbler	Environmental Express Lab ID T6		3209-12-466		
TCLP Tumbler	Environmental Express Lab ID T7		3209-12-467		
TCLP Tumbler	Environmental Express Lab ID T9		3209-12-463		
TCLP Tumbler	Dayton (motor) Lab ID T1	2Z794D			
TCLP Tumbler	Dayton (motor) Lab ID T2	5K939E			
TCLP Tumbler	Dayton (motor) Lab ID T3	5K939B			
TCLP Tumbler	Dayton (motor) Lab ID T5	5K939B			
pH Meter	Accumet	AR25			
Balance	A & D Lab ID 14628771	GF6000	14628771		
Balance	A & D Lab ID 11684	GX4000	14536813		
Balance	Mettler Lab ID 1120122641	PB8001S	1120122641		
Hot Plate	Thermodyne Lab ID TCLP Hot Plate	2200			
Centrifuge	Beckman	J6-M	8749	2007	New
Centrifuge	Beckman	J6-M	8551	2007	New
Centrifuge	Thermo Electron Corp Lab ID Cent-1	K	71654833		
Centrifuge	Thermo Electron Corp	K	71654125		

Appendix 3 – Equipment and Instrument List

Instrument Type	Manufacturer	Model Number	Serial Number	Year Put into Service	Condition When Received
	Lab ID Cent-2				
Method 1664A UCT Cartridge	Enviro-Clean	ENUCNIOGXF	UCT #1	2009	New
Oil-Less Vacuum Pump for UCT Cartridge System	Rocker (110V, 60 Hz)	400	TGTJ094	2009	New
SPE-DEX Extractor System	Horizon Technology	4790	#1 - 09-1208 #2 - 09-1210 #3 - 09-1209 #4 - 09-1207	2009	New
GPC - AccuPrep	J2 Scientific	MPS	GPC-1022-1 0-DI	2009	New
GPC - AccuVap Concentrator System	J2 Scientific	FLX	AVM-251-2 5-F	2009	New
GPC – Autosampler Module	J2 Scientific	PrepLinc AS4	ASA-1045-1 3	2009	New
Freezer	Kenmore by Sears	253 28052803	WB91633867	2009	New

Table -1

Inductively Coupled Argon Plasma/Mass Spectrometry (ICP/MS) Instrument Maintenance Schedule

Daily	Weekly	Monthly	Quarterly	Annually	As Needed
Check sample waste container level	Check peristaltic pump proper roller pressure, sample introduction tubing, correct pump rotation, and condition of drain tubing	Clean all filters and fans	Replace oil in roughing pumps	Replace oil in turbo-molecular pump	Check electronic settings for optimum sensitivity resolution, mass calibration, ion optics, CEM, deflector voltage
Check quartz torch condition	Check condition of sampler and skimmer cones	Check recirculator water level			
Measure quartz torch for proper alignment	Check and drain oil mist eliminator on roughing pumps Clean spray chamber and nebulizer Check oil level of roughing pumps				

Table -2

ICP Instrument Maintenance Schedule

Daily	Monthly or As Needed	Semi-annually	Annually
Check gases Check that argon tank pressure is 50-60 psi and that a spare tank is available Check aspiration tubing	Clean plasma torch assembly to remove accumulated deposits	Change vacuum pump oil	Notify manufacturer service engineer for scheduled preventive maintenance service
Check vacuum pump gage (<10 millitorr)	Clean nebulizer and drain chamber, keep free flowing to maintain optimum performance	Replace coolant water filter (may require more or less frequently depending on the quality of water)	
Check that cooling water supply system is full and drain bottle is not full Also that drain tubing is clear, tight fitting and has few bends	Clean filters on back of power unit to remove dust		
Check that nebulizer is not clogged	Replace when needed peristaltic pump tubing sample capillary tubing autosampler sipper probe		
Check that capillary tubing is clean and in good condition	Check yttrium position Check O-rings		

Table -2

ICP Instrument Maintenance Schedule

Daily	Monthly or As Needed	Semi-annually	Annually
	Clean/lubricate pump rollers		
Check that peristaltic pump windings are secure			
Check that high voltage switch is on			
Check that exhaust screens are clean			
Check that torch, glassware, aerosol injector tube, bonnet are clean			

Table -3

Cold Vapor Atomic Absorption Mercury Instrument Maintenance Schedule

Daily	As Needed	Annually
Clean lens windows with methanol	Check Hg lamp intensity	Change Hg lamp
Check aperture reading	Check pump tubing/drain tubing	Check liquid/gas separator
Check argon flow/pressure	Clean optical cell	
Check tubing and replace, if needed	Lubricate pump	
Check drain		
Replace drying tube		

Table -4

Gas Chromatograph Instrument Maintenance Schedule

Daily	As Needed	Quarterly/Semi-annually/Annually
Check for sufficient supply of carrier and detector gases Check for correct column flow and/or inlet pressures	Replace front portion of column packing or break off front portion of capillary columns Replace column if this fails to restore column performance or when column performance (e g peak tailing, poor resolution, high backgrounds, etc) indicates it is required	Quarterly ELCD change-roughing resin, clean cell assembly Quarterly FID clean detector
Check temperatures of injectors and detectors Verify temperature programs	Change glass wool plug in injection port and/or replace injection port liner when front portion of column packing is changed or front portion of capillary column is removed	Semi-annually ECD perform wipe test
Check inlets, septa Replace septum	Clean injector port	Annually ELCD change finishing resin, clean solvent filter Annually FID Replace flame tip ECD detector cleaning and re-foiling, every five years or whenever loss of sensitivity, or erratic response or failing resolution is observed
Check baseline level	Perform gas purity check (if high baseline indicates that impure carrier gas may be in use)	
Check reactor temperature of electrolytic conductivity detector	Replace or repair flow controller if constant gas flow cannot be maintained	
	Replace fuse	
Inspect chromatogram to verify symmetrical peak shape and adequate resolution between closely eluting peaks	Reactivate external carrier gas dryers	
	Detectors clean when baseline indicates	

Table -4

Gas Chromatograph Instrument Maintenance Schedule

Daily	As Needed	Quarterly/Semi-annually/Annually
Clip column leader	contamination or when response is low FID clean/replace jet, replace igniter NPD clean/replace collector assembly PID clean lamp window monthly or replace as needed, replace seals ELCD check solvent flow weekly, change reaction tube, replace solvent, change reaction gas, clean/replace Teflon transfer line ECD follow manufacturers suggested maintenance schedule	
	Reactivate flow controller filter dryers when presence of moisture is suspected	
	HP 7673 Autosampler replace syringe, fill wash bottle, dispose of waste bottle contents	
	Purge & trap devices periodic leak checks quarterly, replace/condition traps (when poor response or disappearance of reactive or poorly trapped compounds), clean sample lines, valves (if they become contaminated), and clean glassware Clean sparger weekly Check purge flow monthly Bake trap as needed to correct for high background Change trap annually, or as needed whenever loss of sensitivity, or erratic response or failing resolution is observed	
	Purge & trap autosamplers leak check system, clean sample lines, valves PTA-30 autosampler also requires cleaning the syringes, frits, valves, and probe needles, adjustment of micro switches, replacement of Teflon valve, and lubrication of components	

Table -5

Mass Spectrometer Instrument Maintenance Schedule

Daily	Weekly	As Needed	Quarterly	Semi-Annually	Annually
Check for sufficient gas supply Check for correct column flow and/or inlet pressure		Check mass calibration (PFTBA or FC-43) Check level of oil in mechanical pumps and diffusion pump if vacuum is insufficient Add oil if needed between service contract maintenance Check ion source and analyzer (clean, replace parts as needed)			
Check temperatures of injector, detector Verify temperature programs		Replace electron multiplier when the tuning voltage approaches the maximum and/or when sensitivity falls below required levels Check vacuum, relays, gas pressures and flows			

Table -5

Mass Spectrometer Instrument Maintenance Schedule

Daily	Weekly	As Needed	Quarterly	Semi-Annually	Annually
Check inlets, septa		Clean Source, including all ceramics and lenses - the source cleaning is indicated by a variety of symptoms including inability of the analyst to tune the instrument to specifications, poor response, and high background contamination Change oil in the mechanical rough pump Relubricate the turbomolecular pump-bearing wick			
Check baseline level		Repair/replace jet separator (VOA only)			
Check values of lens voltages, electron multiplier, and relative abundance and mass assignments of the calibration compounds		Replace filaments when both filaments burn out or performance indicates need for replacement			

Table -6

High Pressure Liquid Chromatograph Instrument Maintenance Schedule

Daily	As Needed
Check level of solution in reservoirs If adding, verify that solvent is from the same source If changing, rinse delivery lines to prevent contamination of the new solvent	Replace columns when peak shape and resolution indicate that chromatographic performance of column is below method requirements
Flush with an appropriate solvent to remove all bubbles	Rinse flow cell with 1N nitric acid if sensitivity low
Pre-filter all samples	Change pump seals when flow becomes inconsistent
	Repack front end of column Backflush column

Table - 7

Organic Prep, Inorganic Prep and TCLP Equipment Maintenance Schedule

Equipment	Daily	Monthly	Annually	As Needed
Sonicator	Daily when used Inspect probe tips for inconsistencies (etching/pitting)		Tune sonicator assembly	Disassemble and clean sonicator probe tips Replace probe tip
Analytical/Top Loading Balance	Check using Class S or Class 1 verified weights once daily or before use Clean pan and weighing compartment		Manufacturer cleaning and calibration	
Refrigerators/Freezers	Temperatures checked and documented either manually or electronically			Refrigerant system and electronics serviced
Digestion Block			Check temperature with NIST thermometer	Digestion Block
Zero Headspace Extractors	Verify Rotation speed and record Check for leakage			Vendor repair
TCLP Extractors	Verify rotation speed and record			

Table - 8

Wet Chemistry and Support Equipment Maintenance Schedule

Equipment	Daily	Monthly	Annually	As Needed
Analytical/Top Loading Balance	Check using Class S or Class 1 verified weights once daily or before use Clean pan and weighing compartment		Manufacturer cleaning and calibration	
Refrigerators/Walk-In Coolers/Freezers	Temperatures checked and documented either manually or electronically			Refrigerant system and electronics serviced
Ovens	Temperatures checked and documented			Electronics serviced
pH Meter	Inspect electrode Verify electrodes are properly connected and filled Inspect electrode proper levels of filling solutions Make sure electrode is stored in buffer (pH 4 0)			Clean electrode Refill reference electrode
Specific Digital Ion Analyzer	Daily when used Calibrate with check standards Inspect electrode daily, clean as needed Inspect electrode proper levels of filling solutions daily, fill as needed Clean probe, each use			Electronics serviced
Turbidimeter	Daily when used Adjust linearity on varying levels of NTU standards Standardize with NTU standards Inspect cells	Clean instrument housing		Electronics serviced

Table - 8

Wet Chemistry and Support Equipment Maintenance Schedule

Equipment	Daily	Monthly	Annually	As Needed
Dissolved Oxygen Meter	Daily when used Calibrate with check standards Check probe membrane for deterioration Clean and replace membrane with electrode solution			Electronics serviced
Conductance Meter	Daily when used Check probe and cables Standardize with KCl Inspect conductivity cell			Electronics serviced
Chemical Oxygen Demand (COD) Reactor	Daily when used Calibrate with check standards			Electronics serviced
Spectrophotometer	Check the zero %A adjustment Clean sample compartment Clean cuvettes	Clean windows	Check instrument manual Perform wavelength calibration Replace lamp annually or when erratic response is observed Clean and align optics	Dust the lamp and front of the front lens
Flash Point Tester	Check tubing Clean sample cup each use Check gas Clean flash assembly Check stirrer		Check thermometer against NIST thermometer, when used	

Table - 9

AlpChem Auto Analyzer Instrument Maintenance Schedule

As Needed	Daily	Monthly	Bi-monthly	Annually
Prepare fresh reagents	Check detector and make sure there are no trapped bubbles in detector cell	Replace tubing	Lubricate pump roller	Clean pump rollers with steel wool and lubricate
	Check Valves			
	Check Reference source			
Replace pump tubing	Check peristaltic tubing and rollers Check sampler	Clean pump, diluter, and XYZ Sampler		
Clean sample probe shaft				

Table - 10

Alpkem FS3000 (1677 Available Cyanide) Instrument Maintenance Schedule

As Needed	Weekly	Daily	Monthly	Bi-monthly
Replace pump tubing	Prepare fresh reagents	Clean detector cell and make sure there are no trapped bubbles in lines	Replace tubing	Lubricate pump roller
				Replace Diffusion Membrane
		Check peristaltic tubing and rollers		Clean Reference Electrode
				Replace Reference solution

Table - 11

Konelab Instrument Maintenance Schedule

As Needed	Daily	**Weekly**	**Monthly**
Replace Lamp	Replace DI water	Clean wash wells	Check and lube incubator rods
Replace Needle	Empty Liquid Waste Container	Clean incubator	Clean and lube fetcher rods
Replace Mixer	Empty Cuvette Waste Container	Clean off any chemical residue	Clean and lube dispenser rods
Replace Syringe	Run "Start Up"	Check syringe plunger tip and lubricate	Check Teflon block tightness
	Review Water Check	Check that cooling fans are working	Recreate Result Archive
	Wipe condensation from reagent compartment	Print then delete messages	Save database to CD or USB
	Run "Stand By"	Reboot computer	Run Ethanol through the system
	Save results to Excel file		Run Dispensing and Measuring tests at 480 or 492 nm
	Clear daily files		Perform Disk Cleanup and Defrag

Table - 12
Ion Chromatograph Instrument Maintenance Schedule

As Needed	Daily	Weekly	Monthly	Semi-annually
Replace micromembrane suppressor when decreases in sensitivity are observed	Check plumbing/leaks	Check pump heads for leaks	Check all air and liquid lines for discoloration and crimping, if indicated	Lubricate left hand piston
Check fuses when power problems occur		Check filter (inlet)	Check/change bed supports guard and analytical columns, if indicated	
Reactivate or change column when peak shape and resolution deteriorate or when retention time shortening indicates that exchange sites have become deactivated	Check pump pressure			
	Check conductivity meter			

Table -13

Total Organic Carbon Analyzer Instrument Maintenance Schedule

Daily	As Needed	Weekly	Monthly	Semi-Annually
Check Oxygen supply Persulfate supply Acid supply Carrier gas flow rate (~ 150 cc/min) IR millivolts for stability (after 30 min warm-up) Reagent reservoirs	Check injection port septum after 50-200 runs Tube end-fitting connections after 100 hours or use Indicating drying tube NDIR zero, after 100 hours of use Sample pump, after 2000 hours for use Digestion vessel/condensation chamber, after 2000 hours of use Permeation tube, after 2000 hours of use NDIR cell, after 2000 hours of use	Check liquid-flow-rate-pump-tubing conditions on autosampler Check injection port septum	Clean digestion vessel Clean condenser column Do the leak test	Change pump tubing

Note Refer to manufacturer's instructions for each piece of equipment to identify and perform maintenance operations

Attachment 14

SOP No. 4: Collecting Surface Sediments Using an Ekman or Ponar Dredge

Title: Collecting Surface Sediments Using an Ekman or Ponar Dredge

I Introduction

This procedure describes the equipment and methods to be used to conduct surface sediment sample collection during long-term monitoring activities at the Metal Bank Superfund Site. For the purpose of this method, surface sediment is considered to range from 0 to 6 inches in depth Collection of surface sediment can be accomplished with a system consisting of a remotely activated device (dredge) and a deployment system. This technique consists of lowering a sampling device (dredge) to the surface of the sediment by use of a rope, cable, or extended handle The mechanism is activated, and the device entraps sediment in spring-loaded or lever-operated jaws.

An Ekman dredge sampling device is a lightweight sediment sampling device with spring activated jaws It is used to collect moderately consolidated, fine textured sediment. For this project, once the sample has been retrieved, the Ekman will be operated in the top sampling mode and will therefore function as a box corer. It will be used to collect undisturbed sediments, taking care to preserve the quiescent sediment surface/water interface

A Ponar dredge is a heavyweight sediment sampling device with weighted jaws that are lever or spring activated It is used to collect consolidated fine to coarse textured sediment Such a device will not be utilized for the sediment sampling activities proposed as it may disturb the depositional setting of the material during its deployment.

II Equipment and Supplies

The following equipment will be utilized to conduct sediment sampling

1. Ekman dredge and materials are described in the individual sections below.
2. Personnel protective equipment (PPE) - including steel toe boots (if aboard a boat), waders (if in a stream), and disposable gloves (refer to SSHP requirements for full PPE requirements)
3 Log sheets to record all field collected data

III. Guidelines

Using the on-board RTK DGPS system, maneuver the sampling vessel to within 10 ft (maximum distance) of the pre-programmed target coordinates for each sample

location, and stabilize the vessel as much as possible Similarly locate the sampling position at stream or tributary locations

Confirm the location by examining the site map, bathymetric survey map, and landmarks Collect sample using Ekman or Ponar dredge using the following guidelines

Ekman Dredge Guidelines (6 inch model)

1 Install and secure the polycarbonate Ekman liner (necessary only when collecting specific subsamples of the 0-6 inch stratum, *e g* , a 0-1 inch sample with minimal disturbance to the retrieved sediment)

2 Attach a sturdy nylon rope or stainless steel (SS) cable through the hole on the top of the bracket, or secure the extension handle to the bracket with machine bolts.

3. Cock the Ekman Attach springs to both sides of the jaws. Fix the jaws so that they are in open position by placing trip cables over the release studs. Ensure that the hinged doors on the dredge top are free to open

4 Lower the sampler to a point 4 to 6 inches above the sediment surface

5 If the sampler is on a rope or cable, drop the sampler to the sediment If an extension handle is used the sampler will be pushed into the sediment approximately 4 inches to prevent overfilling of the dredge.

6. Trigger the jaw release mechanism by lowering a messenger down the line, or by depressing the button on the upper end of the extension handle

7 Raise the sampler evenly as jerking motions or excessive speed may disturb the sample. Slowly decant any free liquid through the top of the sampler Care should be taken to retain the fine sediment fraction during this procedure.

8 Open the sampler jaws and transfer the sample into a stainless steel, plastic or other container by re-cocking the Ekman while it is resting on the container Care should be taken to retain the fine sediment appropriate composition (*e g* , Teflon) container. The liner, if used, will retain the shape of the sample inside of the Ekman and facilitate removal of sample in the field when it is positioned on a holder designed to accept the sample and liner This is necessary for discrete surface sample collection (usually the top 2 to 2.5 centimeters [1 inch]), for example, which is collected from the top of the sediment surface only. This portion of the sample should be removed from the Ekman through the top of the sampler, or while still in the liner after removed from the Ekman as discussed above The liner may be marked on the outside to easily identify the amount of material to remove using decontaminated SS spoons or a SS flat blade (putty knife) bent to retrieve the sample efficiently Ensure that non-dedicated containers have been adequately decontaminated. If necessary, continue to collect additional sediment grabs until sufficient material has been secured to fulfill analytical requirements. Thoroughly homogenize and then transfer sediment to

sample containers appropriate for the analyses requested. Samples for volatile organic analysis must be collected directly from the bucket before homogenization to minimize volatilization of contaminants

Ponar Dredge Guidelines:

1 Attach a sturdy nylon rope or steel cable to the ring provided on top of the dredge

2. Arrange the Ponar dredge with the jaws in the open position, set the trip bar so the sampler remains open when lifted from the top. If the dredge is so equipped, place the spring loaded pin into the aligned holes in the trip bar

3 Slowly lower the sampler to a point approximately two inches above the sediment.

4 Drop the sampler to the sediment. Slack on the line will release the trip bar or spring loaded pin, pull up sharply on the line to close the dredge

5. Raise the dredge to the surface and slowly decant any free liquid through the screens on top of the dredge. Care should be taken to retain the fine sediment fraction during this operation.

6 Open the dredge and transfer the sediment to a stainless steel, plastic or other appropriate composition (*e g* , Teflon) container Ensure that non-dedicated containers have been adequately decontaminated. If necessary, continue to collect additional sediment until sufficient material has been secured to fulfill analytical requirements. Thoroughly homogenize the sediment and then transfer sediment to sample containers appropriate for the analyses requested Samples for volatile organic analysis must be collected directly from the bucket before homogenization to minimize volatilization of contaminants.

IX References

Adapted from SOP#EH-02, East Helena Site, Montana September 2003

Mason, B J. 1983 Preparation of soil sampling protocol: techniques and strategies EPA-600/4-83-020

Barth, D S., B.J Mason 1984. Soil sampling quality assurance user's guide. USEPA-600/4-84-043.

USEPA 1984 Characterization of hazardous waste- a methods manual: Volume II: Available sampling methods, second edition EPA-600/4-84-076

de Vera, E.R., B.P Simmons, R.D. Steohen, D L. Storm 1980 Samplers and sampling procedures for hazardous waste streams EPA-600/2-80-018.

Attachment 15

SOP No. 5: *In-Situ* Sediment Bioaccumulation Tests with *Lumbriculus Variegatus*

Title: In-Situ Sediment Bioaccumulation Tests with *Lumbriculus Variegatus*

I Introduction

This procedure describes the equipment and methods to be used to perform in-situ bioaccumulation testing using *Lumbriculus variegatus* on an estuarine, tidal mud flat for the Metal Bank Superfund Site long term monitoring activities The testing will be performed at 4 locations in the mudflat at the Metal Bank site and at 2 off-site reference locations Six replicate test chambers will be installed at each sampling location

II Equipment and Supplies

The following equipment will be needed to perform the bioaccumulation testing·

1. Cellulose acetate butyrate (CAB) or similar material tubing (4-inch outer diameter and 12-inch long section) and polyethylene end caps sized to fit tubing.
2. 80-µm polypropylene mesh
3. Nalgene tubing (0 5-inch outer diameter)
4. 100 ml glass tubes.
5. 4-foot long sections of rebar for marking test chamber locations
6. *Lumbriculus variegatus.*
7. Hand tools including drill and ½-inch drill bit, pinch clamps, scissors, silicone caulk, elastic bands, wire tray shovel, 50- µm brass sieve, forceps, large glass dishes, a balance, and ziplock bags
8. Personnel protective equipment (PPE) – including hard hat, steel toe boots, safety glasses, and clean disposable gloves (nitrile preferred)
9. Measuring tapes, field books, pens, pencils, digital camera, and GPS.
10. Tape – electrical, duct, and clear packing tape.

III Test Equipment Preparation and Test Procedures

A Test Chamber Preparation

1. Cut the 4-inch outer diameter (O D) tubing into 12-inch long sections to serve as organism test chambers.
2. Drill approximately 30-40 holes into the sides of each tube and wrap 80-µm Polypropylene mesh securely around the entire chamber Silicone caulk can be used to adhere the mesh to the chamber
3. Install two polyethylene end caps on each test chamber.

4 Add one inlet port to the top side of each test chamber by drilling a 0.5-inch hole in the end cap and attaching an appropriate length of Nalgene (0 5-inch O D) tubing with silicone caulk The inlet port should be closed with a plastic pinch clamp. Port tubing should be of sufficient length to extend above the water surface to allow for test organism addition after installation of the test chambers in the mudflat
5. The assembled test chamber should be soaked in deionized water for 24 hours prior to use in bioaccumulation testing

B Test Organism Preparation

1. *Lumbriculus variegatus* are to be obtained from a reputable supplier
2. Collect 10% of the test organism population and analyze for the compound(s) of interest prior to deployment of the test chambers
3 Acclimate test organism population to site water (including expected temperature) prior to testing
4. For each test replicate, approximately 20 g of L *variegates* are placed into a container with site water. Organisms should be added to transport containers no more than two hours before deployment
5 Six replicate test chambers should be randomly assigned to each of the six sites (4 test treatment sites, 2 field control sites) and will be deployed over a 2 day period

C. Test Chamber Deployment

1 Prior to initiating in-situ bioaccumulation tests, the testing and reference site locations will be determined and sediment for chemical analyses (total organic carbon) and grain size will be collected from each sampling location. Site water is to be characterized by measuring temperature, pH, DO, hardness, alkalinity, ammonia, conductivity and turbidity
2. Tests will include reference controls (culture water and control sediments), field controls (sediment has background level of compound of interest), and field test replicates.
3 Each field site (test and control) will consist of an identical number of replicate in-situ test chambers (6 replicates)
4 Approximately 1 gallon of surficial sediment collected from each location will be placed inside each test chamber. Any obvious indigenous organisms will be removed from sediment before it is placed in the test chamber
5 Once filled with sediment, each test chamber is to be filled with site water, capped and secured into position by elastic bands within a wire basket.

6 A 4-foot length of rebar is to be driven into the mudflat at each testing location until only one foot remains above the surface This is so test chambers can be located if they become buried
7. After a three day period to allow equilibration of water and sediment within the test chambers, a small amount of water is to be siphoned through the mesh screen and tested for dissolved oxygen (DO) concentrations. Site water is characterized by measuring temperature, pH, DO, conductivity and turbidity.
8 Remove the pinch clamp from the inlet port and insert a small funnel into the port The test organisms are to be added to each replicate chamber via the port Gently flush the port with site water to 'wash' test organisms into the test chamber
9 Test chambers should be checked every Monday, Wednesday and Friday during the exposure period (and as soon as possible after storms resulting in unusually high flow/turbulence on the river) to verify that the correct test chamber positioning is maintained.

D Test Chamber Retrieval

1 After 28 days, the test chambers will be retrieved over a 2 day period
2 Test chambers should be located using the rebar markers and then gently dug up using a shovel
3. Each test chamber should be checked for damage, *e g*, holes in the window mesh that would allow escape by test organisms or entry by indigenous organisms
4 A small amount of water is to be siphoned through the mesh screen and tested for DO concentrations Site water is to be characterized by measuring temperature, pH, DO, hardness, alkalinity, ammonia, conductivity and turbidity. Total organic carbon will be analyzed on chamber sediments present at the end of deployment
5. Replicate test chambers will be placed in individual insulated coolers for each site and transported to a processing site A completed chain-of-custody will accompany each cooler.
6 Upon receipt at the processing site, the chain-of-custodies will be reviewed and the contents of each cooler checked
7 Organisms should be removed from test chambers and inventoried as either dead or alive within two hours after test chamber collection

E Test Organism Retrieval

1 The exterior of each test chamber will be rinsed with deionized water to remove any indigenous organisms adhering to the outside of the chamber
2. Remove an end cap from each chamber, the contents of which are then emptied into a large, dedicated glass dish The interior of each chamber will be thoroughly

rinsed with deionized water to ensure that all organisms are removed from the test chamber. Any observed indigenous organisms should be removed.

3 Test organisms in each test chamber are to be classified as either alive or dead Death is determined by placing test organisms into fresh water Healthy L. variegates will be bright red and cluster into a tight ball. Dead and failing L variegates specimens will float separately and will have lost their bright red color

4. An acceptable test should have at least 80% mean survival in control replicates

5 Living organisms will be rinsed of all debris and blotted dry with clean, dedicated paper towels.

6 The live *L variegatus* will be sorted from each replicate and composited for the location as a whole, then placed in beakers of clean culture water for 12 hours for gut purging

7. After purging, test organisms at each location will be weighed, placed in ziplock bags, frozen, and sent to the lab as soon as possible for analysis of concentrations of the contaminants of concern

IV References

ASTM. 2001 Standard Guide for Determination of the Bioaccumulation of Sediment-Associated Contaminants by Benthic Invertebrates E1688-00a In Annual Book of ASTM Standards, Vol 11.05, West Conshohocken, PA.

ASTM 2005* Standard Guide for Assessing Freshwater Ecosystem Impairment Using Caged Fish or Invertebrates for Tiered Diagnosis of Stressors -*DRAFT

Dr. J. Diamond, Personal Communication May 5, 2009.

USEPA. 2000. Methods for Measuring the Toxicity and Bioaccumulation of Sediment-Associated Contaminants with Freshwater Invertebrates. Second Edition U S. Environmental Protection Agency, Office of Water, Washington, D C EPA-600-R-99-0064

Attachment 16

KNOX-QA-0005: Balance Calibration and Weight Verification

TESTAMERICA KNOXVILLE

STANDARD OPERATING PROCEDURE

TITLE: Balance Calibration and Weight Verification

(SUPERSEDES: KNOX-QA-0005, Revision 5)

Prepared By: _____

Reviewed By: _____ 8/11/09
Technical Specialist

Approved By: _____ 08/11/09
Quality Assurance Manager

Approved By: _____ 8-11-09
Environmental, Health and Safety Coordinator

Approved By: _____ 8-17-09
Laboratory Director

Copyright Information:
This documentation has been prepared by TestAmerica Laboratories, Inc. and its affiliates ("TestAmerica"), solely for their own use and the use of their customers in evaluating their qualifications and capabilities in connection with a particular project. The user of this document agrees by its acceptance to return it to TestAmerica upon request and not to reproduce, copy, lend, or otherwise disclose its contents, directly or indirectly, and not to use it for any other purpose other than that for which it was specifically provided. The user also agrees that where consultants or other outside parties are involved in the evaluation process, access to these documents shall not be given to said parties unless those parties also specifically agree to these conditions.

THIS DOCUMENT CONTAINS VALUABLE CONFIDENTIAL AND PROPRIETARY INFORMATION. DISCLOSURE, USE OR REPRODUCTION OF THESE MATERIALS WITHOUT THE WRITTEN AUTHORIZATION OF TESTAMERICA IS STRICTLY PROHIBITED. THIS UNPUBLISHED WORK BY TESTAMERICA IS PROTECTED BY STATE AND FEDERAL LAW OF THE UNITED STATES. IF PUBLICATION OF THIS WORK SHOULD OCCUR THE FOLLOWING NOTICE SHALL APPLY:

©COPYRIGHT 2009 TESTAMERICA LABORATORIES, INC. ALL RIGHTS RESERVED.

1. Purpose

1.1 This SOP describes the calibration requirements for all balances at TestAmerica Knoxville that are used during analysis The SOP also describes the verification of weights used for balance calibration

2. Responsibilities

POSITION	RESPONSIBILITIES
Analyst	• Checks the balance using the assigned weight set for the balance • Enters the measurements into the logbook assigned to the balance • Evaluates the measurements to ensure the balance meets acceptance criteria
Group Leader	• Periodically reviews the balance calibration log to verify proper implementation of this procedure
Quality Assurance Manager or designee	• Performs quarterly checks of all balances • Schedules annual external balance calibration service check. • Coordinates the repair of balances • Schedules periodic verification of weights

3. Safety

3.1 Normal office dependent safety precautions must be taken in performing this SOP. If personnel are required to perform any portion of the procedure in the laboratory area, appropriate personal protective equipment and precautions must be utilized

3 2. All work must be stopped in the event of a known, or potential compromise to the health or safety of an associate The situation must be reported **immediately** to a laboratory supervisor

4. Procedure

4 1 Daily Balance Calibration Verification

4 1 1 Daily (each day the balance is used), the calibration shall be verified by separately weighing two or more traceable weights which should bracket the nominal amounts needed for sample or standard preparation. The traceable weights may be NIST Class S or ASTM Class 1 or Class 2 weights If the balance calibration has already been verified that day, no further calibration verification is required until the next working day

4 1 2 Before beginning the balance check, make sure the balance is level, clean and free from excessive drafts or vibrations

4.1.3. Analytical balance pans may be cleaned with lint free tissues or a soft bristle brush

4 1 4 Tare the balance. If the balance has draft shields, make sure they are closed

4.1.5. Place the weight in the center of the pan Do not pick up weights less than or equal to 100 grams with bare hands Handle these weights with clean cotton gloves, plastic tongs or lifters For weights over 100 grams, clean gloves (latex, Nitrile or similar) or a lint free tissue may be used to handle the weights Close any draft shields

4 1 6 Wait until the balance reading has stabilized and then record the reading in the balance calibration verification logbook

4.1.7 Repeat the calibration verification check using the other weights assigned to the balance.

4 1 8 If the readings are within acceptance criteria, indicate the successful calibration verification in the logbook See Appendix II for acceptance criteria and Appendix III for an example logbook page.

4 1 9 If either reading is not within the acceptance criteria, repeat steps 4 1 2 through 4 1 7.

4 1 10 If the reading is still not within acceptance criteria, notify the laboratory supervisor or QA staff and ensure the tag-out of the balance Refer to SOP KNOX-QA-0008, current revision "Nonconformance and Corrective Action System "

4 1 11 If the weight readings are not within the acceptance criteria, resolution of the nonconformance may include external service of the balance, or the use of separate set of weights to assess balance accuracy

4 1 12 Store the weights away from corrosive vapors and dust This may be done by closing the container provided with the weight set Weights may be cleaned with a soft lint free cloth, or a bristle brush reserved for that purpose only

4.1 13 Weight measurements less than 1 gram should not be done on balances measuring to only two decimal places.

4 2 Annual Balance Calibration Verification

4 2.1. All balances will be serviced and either calibrated or have calibration verified annually by a manufacturer's representative or an outside balance calibration service

4 2 2 Annual calibration certificates are maintained by the QA department as a quality/operation record

4 2.3. The balance service must provide a certificate of calibration which documents the NIST traceability of the weights used during the balance calibration verification measurements.

4 3 Quarterly Balance Calibration Check

4 3 1 Every quarter, the balance must be checked across the range of the balance, using at least three weights

4 3.2 The acceptance criteria are listed in Appendix II.

4 4 Weight certification

4 4 1 At least one set of weights must be certified as one of the following by an external certifying organization that meets NIST criteria NIST Class S, ANSI/ASTM Class 1, or ANSI/ASTM Class 2

4 4 2. Weight certificates shall be maintained by the QA department.

4 4.3 Reference weights must be certified every three years as meeting the minimum ANSI/ASTM Class 2 requirements specified in Appendix V

4 4.4 This reference weight set is then used to verify the working weights sets

4.5. Working Weight Verification

4 5.1 Working weight calibration verification shall be performed at least annually by the Quality Assurance Manager or designee. The verification shall consist of checking the working weights (those used every day) against the reference set of NIST Class S or ASTM Class 1 or Class 2 weights

4.5 2 Before beginning the weight check, make sure the balance is level, clean and free from excessive drafts or vibrations.

4 5 3 Tare the balance If the balance has draft shields, make sure they are closed.

4 5 4. Perform steps 4 5.5 through 4.5.6 for both the reference set of NIST weights and the working weights Record the weights in the worksheet

4 5.5. Place the weight in the center of the pan Do not pick up weights less than or equal to 100 grams with bare hands. Handle these weights with clean cotton gloves, plastic tongs or lifters. For weights over 100 grams, clean gloves (latex, Nitrile or similar) or a lint free tissue may be used to handle the weights Close any draft shields.

4.5.6 Wait until the balance reading has stabilized and then record the reading on a worksheet.

4.5 7 If the readings are within acceptance criteria, indicate the successful weight verification on the worksheet See Appendix IV for acceptance criteria

4 5.8. If any working weight does not meet the acceptance criteria, repeat steps 4.5 2 through 4.5 7

4.5 9 If any working weight is still not within acceptance criteria, remove the weight from service. Schedule external service for the weight or replace the weight with another weight of the same denomination that meets the working weight calibration verification criteria

4 5.10 Store the weights away from corrosive vapors and dust. This may be done by closing the container provided with the weight set. Weights may be cleaned with a soft lint free cloth, or a bristle brush reserved for that purpose only

4.6. Any deviations from this procedure must be documented as a nonconformance, with a cause and corrective action described

5. Appendices

5 1 Appendix I-References

5.1.1. TestAmerica Knoxville Quality Assurance Manual, current revision

5 1 2 ASTM E617-91, Standard Specification for Laboratory Weights and Precision Mass Standards

5 1 3 ASTM D4753-02, Standard Guide for Evaluating, Selecting and Specifying Balances and Standard Masses for Use in Soil, Rock, and Construction Materials Testing

5 2 Appendix II Daily weight check and quarterly balance check acceptance criteria

5 3 Appendix III: Example Logbook Page

5.4. Appendix IV· Working Weight Verification Acceptance Limits

5 5. Appendix V ANSI/ASTM and NIST Weight Tolerances

Appendix II: Daily weight check and quarterly balance check acceptance criteria

Denomination of Weight grams	Acceptance Criteria grams
2 place balance	
0 10	0 08 – 0 12
0 50	0 48 – 0 52
1	0 98– 1 02
2	1 98 – 2 02
5	4 98 – 5 02
10	9 98 – 10 02
20	19 98 – 20 02
50	49 95 – 50 05
100	99 90 – 100 10
200	199 80 – 200 20
400	399 60 – 400 40
500	499 5 0– 500 50
600	599 40 – 600 60
1000	999 00 – 1001 00
1050	1049 00 – 1051 00
4000	3996 00 – 4004 00
3 place balance	
0 100	0 098 – 0 102
0 200	0 198 – 0 202
1	0 995 – 1 005
2	1 990 – 2 010
5	4 980 – 5 020
10	9 980 – 10 020
20	19 980 – 20 020
50	49 950 – 50 050
100	99 90(0) – 100 10(0)
200	199 80(0) – 200 20(0)
300	299 70(0) – 300 30(0)
500	499 50(0) – 500 50(0)
600	599 40(0) – 600 60(0)
4 place balance	
0 100	0 0990 – 0 1010
1	0 9950 – 1 0050
2	1 9900– 2 0100
5	4 9800 – 5 0200
10	9 9800 – 10 0200
20	19 9800 – 20 0200
50	49 9500 – 50 0500
75	74 9250 – 75 0750

Appendix II: Daily weight check and quarterly balance check acceptance criteria, continued

Denomination of Weight grams	Acceptance Criteria grams
5 place balance	
0 1	0 09995 – 1 00005
1	0 99900 – 1 00100
2	1 99800 – 2 00200
5	4 99500 – 5 00500
10	9 99000 – 10 01000
20	19 98000 – 20 02000
50	49 95000 – 50 05000
100	99 9000 – 100 1000
150	149 8500 – 150 1500
200	199 8000 – 200 2000

Appendix III: Example Logbook Page

TestAmerica Knoxville Laboratory
Daily Balance Calibration Check Log

Department: GCMS
Balance Make/Model: Sartorius B410, S/N 40019100

Month/Year: _____
Weight set ID: #16

Date	Analyst	1.00 ± 0.02g	10.00 ± 0.05 g	Acceptable Y/N*	COMMENTS
1					
2					
3					
4					
5					
6					
7					
8					
9					
10					
11					
12					
13					
14					
15					
16					
17					
18					
19					
20					
21					
22					
23					
24					
25					
26					
27					
28					
29					
30					
31					

* Acceptable reading must be obtained before the balance may be used If the balance calibration is unacceptable, notify the QA department

Reviewed by/Date:_____

Appendix IV: Working Weight Verification Acceptance Limits.

Denomination of Weight (grams)	Acceptance Criteria (grams)
0 1	0 0997 – 0.1003*
0.5	0 4995 – 0 5005
1	0.9990 – 1.0010
2	1 9980 – 2.0020
5	4 9950 – 5 0050
10	9.9900 – 10.0100
20	19.9800 – 20 0200
50	49 9500 – 50 0500
100	99 9000 – 100.1000
200	199 9800 – 200 0200
500	499 95 - 500.05
1000	999 00 – 1001 00
1050	1048 95 – 1051.05

* For 0 1 g weights used on a 5 place balance, the acceptance range is 0 09995-0 10005 g.

Appendix V: ANSI/ASTM and NIST Weight Tolerances

Weight	ANSI/ASTM Class 1 (mg)	ANSI/ASTM Class 2 (mg)	NIST Class S (mg)
1 kilogram	2 5	5	2 5
100 gram	0.25	0.50	0.25
50 gram	0 120	0 25	0.12
20 gram	0 074	0 10	0.074
10 gram	0 050	0 074	0 074
5 gram	0 034	0 054	0 054
2 gram	0 034	0.054	0.054
1 gram	0 034	0.054	0.054
500 milligram	0 010	0 025	0 025
200 milligram	0.010	0 025	0.025
100 milligram	0 010	0.025	0.025
50 milligram	0 010	0 014	0 014
20 milligram	0 010	0 014	0 014
10 milligram	0.010	0.014	0.014
5 milligram	0 010	0 014	0.014
2 milligram	0 010	0 014	0 014
1 milligram	0 010	0 014	0 014