SDMS DocID 2125916

ORIGINAL

FINAL (100%) DESIGN REPORT FOR THE MALVERN TCE SUPERFUND SITE

ORIGINAL

East Whiteland Township, Pennsylvania

Prepared for :

Chemclene Site Defense Group

Prepared by :

Golder Associates

PROJECT No. 003-6000

SEPTEMBER 2004

Golder Associates Inc.

1951 Old Cuthbert Road, Suite 301
Cherry Hill, NJ 08034
Telephone (856) 616-8166
Fax (856) 616-1874
www.golder.com

FINAL (100%) DESIGN REPORT FOR THE MALVERN TCE SUPERFUND SITE EAST WHITELAND TOWNSHIP, PA

Prepared for:

Chemclene Site Defense Group

Prepared by:

Golder Associates Inc.
1951 Old Cuthbert Road, Suite 301
Cherry Hill, New Jersey 08034

DISTRIBUTION:

2 Copies	U.S. Environmental Protection Agency
2 Copies	CDM Federal
3 Copies	PA Department of Environmental Protection
8 Copies	CSDG Technical Committee
1 Copy	Paul Boni, Esq.
2 Copies	Golder Associates

September 2004

Project No: 003-6000

Golder Associates Inc.

1951 Old Cuthbert Road, Suite 301
Cherry Hill, NJ 08034
Telephone (856) 616-8166
Fax (856) 616-1874
www.golder.com

September 13, 2004

Project No.: 003-6000

USEPA Region III
1850 Arch Street
Philadelphia, PA 19103-2029

Attn: Mr. James P. Harper

RE: FINAL 100% DESIGN REPORT, MALVERN TCE SUPERFUND SITE
EAST WHITELAND TOWNSHIP, PENNSYLVANIA

Dear Mr. Harper:

Golder Associates Inc. (Golder Associates), on behalf of the Chemclene Site Defense Group (CSDG), is pleased to provide you with 2 insertion packages for the Pre-Final (90%) Design Report, which will now be considered the Final (100%) Design Report for the Malvern TCE Superfund Site. This report has been prepared in accordance with section VI.10 of the Consent Decree (Civil Action 99-3715, date of entry December 13, 1999).

Should you have any questions, please contact Chris Young of *de maximis, inc.* at (610) 435-1151.

Very truly yours,

GOLDER ASSOCIATES INC.

Brian J. Eichlin, P.E.
Associate

BJE:lrl
G:\PROJECTS\003-6000 MALVERN\100% DESIGN\100%CVR LTR.DOC

cc: (3 copies) April Flipse, PADEP
(2 copies) Mary Jo Apakian, CDM Federal
(8 copy) CSDG Technical Committee
(1 copy) Paul Boni, Esq.

TABLE OF CONTENTS

Cover Letter

Table of Contents i

List of Acronyms v

SECTION PAGE

1.0 INTRODUCTION 1
1.1 General Site Description 1
1.2 Regulatory Background 2
1.3 Remedial Actions Completed 5
1.4 USEPA ROD Summary and Design Objectives 6
1.5 Report Organization 8

2.0 FDA/MA SOIL REMEDY DESIGN 9
2.1 Project Description / Design Objectives 9
2.2 Design Criteria 11
2.2.1 ROD Requirements 11
2.2.2 ROD Amendment Requirements 16
2.2.3 Additional Regulatory Requirements Identified in FFS 16
2.2.4 Operation and Maintenance Requirements 17
2.3 Design Basis 17
2.3.1 PDI Findings 17
2.3.2 SVE Pilot Study Findings 21
2.3.3 Estimated Vapor Flow, Concentration, and Blower Sizing 22
2.3.4 Estimate Condensate Generation 24
2.4 Site Preparation Design 25
2.4.1 Access Road 27
2.4.2 Access Controls 29
2.4.3 Utilities 29
2.4.4 Soil Stockpile Design 30
2.4.5 Monitoring Procedures and Control Methods 32
2.4.6 Health and Safety Procedures 34
2.4.7 Characterization and Disposal of Remediation Wastes 34
2.5 SVE System Design 35
2.5.1 SVE Well Layout 35
2.5.2 SVE Well Construction 38
2.5.3 SVE Collection System Piping 39
2.5.4 SVE Blower System 41
2.5.5 SVE Treatment System 43
2.5.6 Condensate Management 45
2.6 Operation and Maintenance (O&M) 45
2.7 SVE System Shut-Down Strategy 46
2.7.1 Steady State Operation 47
2.7.2 Pulse Operation 47
2.7.3 Shut-Down Verification Program 48

3.0 FDA/MA GROUNDWATER REMEDY DESIGN 50
3.1 Project Description / Design Objectives 50
3.2 Design Criteria 51
3.2.1 ROD Requirements 51
3.2.2 Operations and Maintenance Requirements 55
3.3 Design Basis 55
3.3.1 PDI Findings 55
3.3.2 Post-PDI Continuous Groundwater Level Data 56
3.4 Design of Monitored Natural Attenuation System 56
3.4.1 Groundwater Chemistry Characterization 56
3.4.2 Hydraulic Gradient Monitoring 58
3.4.3 Sample Collection and Analyses 58
3.4.4 Data Analyses 58

4.0 MPA SOIL REMEDY DESIGN 60
4.1 Project Description / Objectives 60
4.2 Design Criteria 60
4.2.1 ROD Performance Standards 60
4.2.2 Regulatory Guidance 66
4.2.3 Operation and Maintenance Requirements 66
4.3 Design Basis 66
4.4 MPA Cap Design 67
4.4.1 Cap Section Alternatives 67
4.4.2 Cap Layout 68
4.4.3 Design Analysis 69
4.4.4 Fence and Access 72
4.4.5 Surface Water Management 72
4.4.5.1 Surface Water Management Design 72
4.4.6 Temporary Erosion and Sedimentation Controls 73
4.4.7 MPA Demolition Plan 74

5.0 PERMIT EQUIVALENCIES, PERMITS AND APPROVALS 75
5.1 Approval for Backfilling Existing Excavations 75
5.2 Chester County Permit Requirements for Monitoring Well and SVE Well Installation 77
5.3 Air Emissions Permitting 77
5.4 Erosion and Sedimentation Control Plan Approval 78
5.5 Williams Transcontinental Pipeline Crossing 78
5.6 Electrical Service Approvals 79
5.7 Telephone Service Approvals 80
5.8 Local Building, Construction and/or Zoning Permits (East Whiteland Township) 80
5.9 Existing Easements / Access Approvals 80
5.10 Off-Site Remediation Waste Disposal Approvals 81

6.0 REMEDIAL ACTION CONSTRUCTION RELATED PLANS 82
6.1 Health and Safety Plan 82
6.2 Decontamination Plan 83
6.3 Construction Quality Assurance Plan 84
6.4 Residual Materials Management Plan 86
6.5 Remedial Action Contingency Plan 86
6.6 Operation, Monitoring, and Maintenance Plan 86

6.7 Sampling and Analysis Plan 87

7.0 REMEDY IMPLEMENTATION 88
7.1 Contracting Strategy 88
7.2 Remedial Action Schedule 88

8.0 REFERENCES 90

LIST OF TABLES

Table 2-1 Final Cover Over Remaining PCB-Impacted Soil in FDA
Table 2-2 Applicable Treatment Standards
Table 2-3 SVE Well Schedule
Table 2-4 SVE Piping Slopes
Table 2-5 Performance Monitoring Schedule

LIST OF FIGURES

Figure 1-1 Site Location Map
Figure 1-2 Site Layout
Figure 1-3 MPA Current Conditions
Figure 2-1 Generalized Fence Diagram
Figure 2-2 FDA/MA Subsurface Soil Characterization (Phase I)
Figure 2-3 FDA/MA Subsurface Soil Characterization (Phase II)
Figure 2-4 Interpreted Zones of VOC Exceedances of ROD SCS FDA/MA
Figure 2-5 Delineation of PCB Removal Area
Figure 2-6A Proposed Access Improvements – Sheet 1 of 2
Figure 2-6B Proposed Access Improvements - Details – Sheet 2 of 2
Figure 2-7 Typical Soil Remediation Pile
Figure 2-8 SVE Well Layout – Shallow
Figure 2-9 SVE Well Layout – Deep
Figure 2-10 SVE Piping Layout
Figure 2-11 Typical SVE Well / Trench Detail
Figure 2-12 Blower Building Layout
Figure 2-13 Process and Instrumentation Diagram - Symbols and Abbreviations
Figure 2-14 Process and Instrumentation Diagram – Sheet 1 of 2
Figure 2-15 Process and Instrumentation Diagram – Sheet 2 of 2
Figure 2-16 Control Panel Layout
Figure 2-17 Single Line Electrical Diagram
Figure 2-18 Wellhead Control Building Details – Sheet 1 of 3
Figure 2-19 Wellhead Control Building Details – Sheet 2 of 3
Figure 2-20 Wellhead Control Building Details – Sheet 3 of 3
Figure 2-21 SVE Shutdown Strategy
Figure 3-1 Groundwater Elevation vs. Time In FDA/MA Wells
Figure 3-2 MNA Well Layout
Figure 4-1 Existing Conditions and Demolition Plan
Figure 4-2 Proposed MPA Final Grade and Layout
Figure 4-3 MPA Details – Sheet 1 of 2
Figure 4-4 MPA Details – Sheet 2 of 2
Figure 4-5 E&S Control Details
Figure 7-1 Projected Design and RAC Contracting Schedule
Figure 7-2 Projected Schedule of In-Situ Groundwater Bioremediation Pilot Test

LIST OF APPENDICES

Appendix A FDA/MA Soil Remedy Calculations
- Appendix A1 Initial Mass Removal Rate and VOC Vapor Concentration Estimates
- Appendix A2 Condensation Rates Calculations
- Appendix A3 PCB-Impacted Soil Volume Calculations
- Appendix A4 Culverts Structural Analysis
- Appendix A5 Excavation Stability Analysis
- Appendix A6 Pipe Sizing Calculations
- Appendix A7 Flow Comparison for Different Well Screen Lengths

Appendix B MPA Cap Remedy Calculations
- Appendix B1 Evaluation of Erosion Potential
- Appendix B2 Settlement Analysis
- Appendix B3 Water Balance Evaluation

Appendix C Stormwater Evaluation / Calculations
- Appendix C1 Existing Conditions
- Appendix C2 Proposed Conditions

Appendix D Permit Equivalencies, Permits, and Approvals

Appendix E Remedial Action Construction Related Plans
- Appendix E1 Health and Safety Plan
- Appendix E2 Construction Quality Assurance Plan
- Appendix E3 Operation and Maintenance Plan
- Appendix E4 Sampling and Analysis Plan

Appendix F Technical Specifications

LIST OF ACRONYMS (alphabetical)

Acronym	Definition
1,1,1-TCA	1,1,1-trichlorethane
ACOE	U.S. Army Corps of Engineers
CERCLA	Comprehensive Environmental Response and Liability Act
Chemclene	Chemclene Corporation
CQAP	Construction Quality Assurance Plan
CQA	Construction Quality Assurance
CSDG	Chemclene Site Defense Group
cy	Cubic Yards
DCNR	PA Department of Conservation and Natural Resources
DGA	Dense Graded Aggregate
E&S	Erosion and Sedimentation Control
FDA/MA	Former Disposal Area / Mounded Area
FFS	Focused Feasibility Study
FID	Flame ionization detector
FML	Flexible Membrane Liner
ft bgs	feet below ground surface
Golder Associates	Golder Associates Inc.
gpd	gallons per day
HASP	Health and Safety Plan
HDPE	High-Density Polyethylene
HELP	Hydrologic Evaluation of Landfill Performance
HSA	Hollow-Stem Auger
MCLs	maximum contaminant levels
MPA	Main Plant Area
MR Test	Mass Removal Test
NAPs	Natural Attenuation Parameters
NPL	National Priorities List
NPDES	National Pollution Discharge Elimination System
O&M	Operation and maintenance
PADEP	Pennsylvania Department of Environmental Protection
PCBs	Polychlorinated biphenyls
PCE	tetrachloroethylene
PDI	Pre-Design Investigation
PDR	Preliminary Design Report
PFD	Pre-Final (90%) Design Report
PECO	Pennsylvania Electric Company
PNDI	Pennsylvania Natural Diversity Inventory
PPE	Personal Protective Equipment
PR Test	Pneumatic Response Test
PRAP	Proposed Remedial Action Plan
PSWP	Pilot Study Work Plan
QA/QC	Quality Assurance/Quality Control
RAC	Remedial Action Contractor
RCRA	Resource Conservation and Recovery Act
RDWP	Remedial Design Work Plan
RFI	RCRA Facilities Investigation

ROD	Record of Decision
ROI	Radius of Influence
SCS	Soil cleanup standards
Site	Malvern TCE Superfund Site
SMP	Site Management Plan
SAP	Sampling and Analysis Plan
SVE	soil vapor extraction
TCE	trichloroethylene
TSCA	Toxic Substance Control Act
USEPA	United States Environmental Protection Agency
USFWS	U.S. Fish and Wildlife Service
USLE	Universal Soil Loss Equation
UTS	Universal Treatment Standard
VOC	Volatile organic compound
Williams Transco pipeline	Williams Transcontinental natural gas pipeline

1.0 INTRODUCTION

This Final (100%) Design Report (Report) has been prepared by Golder Associates Inc. (Golder Associates) on behalf of the Chemclene Site Defense Group (CSDG) for the Malvern TCE Superfund Site (Site) located in East Whiteland Township, Chester County, Pennsylvania. The Final (100%) Design Report addresses remedial design activities required under the Consent Decree entered into by the United States Environmental Protection Agency (USEPA) and the CSDG (Civil Action 99-3715, date of entry December 13, 1999). The Final (100%) Design Report includes a final (100%) design for the Soil Vapor Extraction (SVE) alternative remedy, which will be constructed in place of the 1997 USEPA Record of Decision (ROD) selected remedy of excavation and off-site treatment/disposal to remediate soils impacted by volatile organic compounds (VOCs) in the Former Disposal Area/Mounded Area (FDA/MA) portion of the Site. The USEPA has agreed to amend the ROD to incorporate this alternative remedy in parallel to the design work. The Final (100%) Design Report incorporates Agency (USEPA and Pennsylvania Department of Environmental Protection (PADEP)) and Construction and Demolition Management, Inc. (CDM) comments provided in a letter from the USEPA on the Pre-Final (90%) Design Report (PFD) (Golder Associates, June 2004).

1.1 General Site Description

The Site is located in East Whiteland Township, Chester County, Pennsylvania as shown on Figure 1-1. The Site is owned and operated by Chemclene Corporation (Chemclene), whose current activity includes the storage, processing, sale and transportation of hydrogen peroxide at the 258 North Phoenixville Pike location. Former operations at the Site have primarily included the storage and sale of new chlorinated solvents and the distillation recycling of used chlorinated solvents for resale of the purified materials. The Site encompasses approximately 5 acres along the southeast side of Bacton Hill, and consists of a Main Plant Area (MPA), located at 258 North Phoenixville Pike, and the FDA/MA to the west. The FDA/MA are connected to the MPA by a long, narrow corridor that approximately parallels the Williams Transcontinental natural gas pipeline (Williams Transco pipeline) right-of-way, as shown on Figure 1-2.

Facilities at the MPA portion of the Site have included a former distillation building (Main Building), concrete pad storage areas, an office trailer, and an open garage. The Main Building and the garage sustained heavy fire damage on August 12, 1999. Two stainless steel, horizontal and cylindrical aboveground storage tanks, located along the northwestern Site boundary, are

reportedly used as part of the current Chemclene business to store hydrogen peroxide. A pile of debris and reportedly empty aboveground storage tanks are located in the area of a former above ground storage tank foundation, north of the Main Building. Other debris, used equipment, vessels, and reportedly empty above ground tanks are located in other areas of the MPA. The MPA, as shown on Figure 1-2, covers an area of approximately 1.25 acres. Figure 1-3 provides relatively recent photographs depicting the condition of the MPA.

The FDA/MA is located approximately 1,900 feet west of the MPA, and consists of a partially wooded area covering approximately 2 acres surrounded by a heavily forested area, as shown on Figure 1-2. As stated in the Final Data Summary Report (CH2MHill, April 1995), borrow pits (approximate 15 feet in depth) were excavated in the FDA portion of the area in 1952 to supply construction materials for the Williams Transco pipeline that runs through the Site as shown on Figure 1-2. These pits were reportedly filled by Chemclene over time with discarded drums, equipment, rubbish, and soil. Subsequently, Chemclene, with oversight from PADEP (formerly PADER), removed approximately 300 drums and impacted soil/debris from two excavations to a depth of approximately 15 feet over several episodes from 1981 through 1984. Remnant soil piles generated from the material removal activities exist adjacent to the excavations. The FDA is currently surrounded by an 8-foot-high chain-link fence.

The MA portion of the area is located immediately west of the FDA. Formerly, earth mounds existed as the ground surface expression of drums buried in shallow excavations and/or natural depressions. The drums were removed by Chemclene in the early 1990's and reportedly the soils were separated and returned to the excavations, leaving the MA in its current essentially flat ground surface condition (CH2MHill, 1997a).

1.2 Regulatory Background

The Site was placed on the National Priorities List (NPL) in September 1983 after concentrations of TCE exceeding USEPA maximum contaminant levels (MCLs) were detected in nearby domestic groundwater wells in the Hillbrook Circle Development, south of the FDA/MA, as shown on Figure 1-2. In 1987, Chemclene, as an operating facility under the Resource Conservation and Recovery Act (RCRA), entered into a Corrective Action Order with the USEPA to characterize and remediate environmental impacts associated with the Site. A RCRA Facilities Investigation (RFI) Work Plan was approved for the Site in 1989. However, in July 1992, Chemclene withdrew its RCRA Part B Application as a treatment, storage, and/or disposal

facility, did not fully implement the RFI Work Plan, stopped accepting used solvents for reclamation and halted its distillation process. As a result of Chemclene's failure to complete the RFI and implement interim corrective measures, USEPA placed the Site under the Comprehensive Environmental Response and Liability Act (CERCLA) remedial program in November 1993.

The USEPA completed a Remedial Investigation of the Site in January 1997 and a Feasibility Study in June 1997. The Proposed Remedial Action Plan (PRAP) for the Site was published in June 1997, and USEPA issued a ROD presenting the Agency's selected remedial action for the Site in November 1997.

On April 28, 1998, USEPA issued an Administrative Order to Chemclene (Docket No. III-98-070-DC) requiring, amongst other things, Chemclene to complete certain portions of the USEPA ROD remedy, namely the following sections:

- X.B.3 – Structure Removal;
- X.B.4 – Tank Removal: Underground Storage Tanks;
- X.B.5 – Main Building; and,
- X.B.6 – Closure of the Main Building (including Loading Dock and Chemical Laboratory).

Chemclene finalized a Work Plan to complete these activities, which the USEPA approved on August 6, 1999. A fire occurred at the Chemclene facility on August 12, 1999. Subsequently, USEPA required Chemclene to conduct subsurface sampling at the MPA and implemented a Removal Action. A summary of the work reportedly[1] completed by Chemclene is provided below:

- Structure Removal: Chemclene had removed over 90% of the Quonset Hut structure prior to the fire. The remaining 10% of the structure was decontaminated by USEPA as part of the Removal Action and was determined to be non-hazardous. In addition, USEPA decontaminated the Former Container Storage Area. Chemclene disposed of the solids and decontamination fluids off-site;

[1] The discussion presented regarding Chemclene was taken from the report entitled "Remedial Action Report, Malvern TCE Superfund Site, East Whiteland Township," September 2000, by Chemclene Corporation.

- Tank Removal: Six former underground storage tanks were excavated and decontaminated by Chemclene. Chemclene disposed of the decontamination fluids and the tanks off-site;

- Main Building: The Main Building was damaged in the fire. As a result, Chemclene implemented a subsurface soil investigation beneath the former Main Building, as well as in other areas of the Site; and,

- RCRA Closure of Main Building, Loading Dock, and Chemical Laboratory: According to the Remedial Action Report, Chemclene completed the RCRA closure of these portions of the MPA. The report states that the only remaining closure work was the closure of the walls and floors of the Main Building, which could not be completed due to the fire.

In September 2000, Chemclene submitted the Remedial Action Report detailing the completion of these remedial action and RCRA closure components. Per CSDG's conversations with the USEPA, it is understood that USEPA has approved this report and the MPA is considered closed under RCRA and does not require additional decontamination.

On December 13, 1999, the U.S. District Court issued its order regarding the entering of the Consent Decree between the CSDG and the USEPA for execution of the remaining remedy elements.

Golder Associates, on behalf of the CSDG, prepared a Remedial Design Work Plan (RDWP), which was submitted to USEPA on May 4, 2000 (Golder Associates, 2000). Two subsequent responses to USEPA and PADEP comments were prepared and submitted to the Agencies on August 16, 2000 and October 18, 2000. These three documents (the initial RDWP and the two response to comments documents) comprised the entire RDWP, which was approved by USEPA on October 31, 2000.

The Pre-Design Investigation (PDI) was implemented in accordance with the RDWP between November 2000 and January 2002. During the course of performing the PDI, an alternative technology for remediating soils in the FDA/MA portion of the Site (soil vapor extraction with limited excavation) was identified as potentially being more effective than the excavation and off-site disposal remedy specified in the USEPA ROD. Therefore, with USEPA's approval, a SVE pilot study was conducted during the PDI. The results of the PDI and the SVE Pilot Study were presented to USEPA and PADEP in a Pre-Design Investigation Report (PDI Report; Golder Associates, May 2002). Concurrently, Golder Associates prepared and submitted to the USEPA

and PADEP a Focused Feasibility Study (FFS) that formally evaluated the SVE alternative comparing it to the ROD selected remedy for FDA/MA soils (Golder Associates, May 2002). USEPA and PADEP issued comments on the PDI Report and FFS on July 31, 2002. Golder Associates, on behalf of the CSDG, provided a written response to the Agencies' comments on September 13, 2002. The USEPA approved the PDI Report and FFS on November 8, 2002. USEPA is currently preparing a formal Amendment to the 1997 ROD to replace the current excavation remedy for FDA/MA soils with the alternative SVE remedy, which includes Site Preparation and limited excavation (hereinafter referred to as the SVE remedy or SVE alternative remedy.

The PDI Report also characterized the nature and extent of groundwater impacts in the MPA portion of the Site. As reported, these conditions varied somewhat from those previously presented in the USEPA RI. As a result of these conditions and given recent advancements in the development/implementation of in-situ groundwater treatment technologies, the CSDG reviewed potential alternatives to treat or remediate groundwater impacts identified in the MPA. More specifically, the PDI Report recommended further evaluation of accelerated in-situ bioremediation, as an alternative to the ROD remedy, which included extraction, aboveground treatment, and reinjection. If applicable, accelerated in-situ bioremediation could potentially provide more direct and rapid remediation of the source of groundwater impacts, reduce the overall remediation time frame, and complement the already prominent natural attenuation processes occurring in the downgradient portion of impact. Subsequently, Golder Associates, on behalf of the CSDG, prepared a Pilot Test Work Plan for evaluating accelerated in-situ bioremediation of MPA groundwater. This Work Plan was submitted to USEPA in December 2002. USEPA provided conditional approval to the Work Plan on January 17, 2003. These conditions were addressed by the CSDG in a letter from Golder Associates dated April 8, 2003. The CSDG notified the Agencies in a letter dated December 3, 2003 that the MPA pilot groundwater study would be initiated. The CSDG is in the process of implementing the groundwater pilot study. The pilot study nutrient addition system has been constructed and is operational. As a result of the ongoing pilot test, and consistent with the Preliminary Design Report, this Report does not include the remedy design for the MPA groundwater.

1.3 Remedial Actions Completed

Chemclene has undertaken several remedial actions at the Site since impacts were first discovered in 1980. Some of these actions include:

- For the MPA:
  - Removal of six underground storage tanks in 1986;
  - As discussed in Section 1.2, Chemclene completed the RCRA closure of several buildings, tanks, and structures within the MPA as detailed in the September 2000 Remedial Action Report; and,
  - Decommissioning and/or removal of five aboveground storage tanks from the aboveground tank area at the MPA (empty tanks are still present in the MPA).
- For the FDA/MA:
  - Removal of debris and approximately 300 drums from the FDA from 1981 through 1984. Soils within portions of the FDA were excavated and piled adjacent to the excavations and/or removed from the Site for disposal at a RCRA permitted disposal facility;
  - A security fence was installed around the perimeter of the FDA; and,
  - Removal of approximately 300 additional drums from the MA in 1990; excavated soil was returned to the trenched areas.

These previous remedial actions have removed a large quantity of potentially contaminated source materials thus reducing the potential for ongoing releases to soil and groundwater. The former above ground storage tank area and other portions of the MPA still contain debris, equipment, and reportedly empty storage tanks that will require removal prior to construction of the USEPA ROD remedy for MPA soils (i.e., capping). Similarly, the FDA/MA contains several roll-off containers that will need to be removed prior to grading work.

In January 2000, following the fire, Earth Data Incorporated, on behalf of Chemclene, performed sampling and analyses of soil in the MPA, beneath the concrete floor of the Main Building and beneath the Former Container Storage Area, as part of the USEPA-required RCRA Closure activities for the Site. As will be described in later sections of this Report, the data resulting from this investigation were utilized to help define the extent of the MPA cap required by the ROD.

1.4 USEPA ROD Summary and Design Objectives

The 1997 USEPA ROD identified the following major remedial action components:

- Water Supply: Installation of a waterline to prevent exposure (i.e., ingestion, contact, etc.) to groundwater contamination at residences affected or potentially affected by the Site.
- Main Plant Area Soils: Installation of a cap to prevent direct contact with contaminated soils at the Main Plant and to reduce the potential for continued migration of these contaminants to the groundwater.

- Main Plant Area Groundwater Plume: Extraction and treatment of groundwater via air stripping followed by carbon adsorption or U/V oxidation and subsequent reinjection of treated water to the aquifer to restore the Site groundwater to beneficial use.

- Former Disposal Area/Mounded Area Soils: Excavation, off-site treatment and disposal of contaminated soils to reduce the potential for continued migration of contaminants in these soils to the groundwater.

- Former Disposal Area/Mounded Area Groundwater Plume: Implementation of a Natural Attenuation program to monitor reduction of contaminant concentrations in groundwater to Maximum Contaminant Levels.

The Water Supply component of the remedy was completed in 2001. A public water supply line was brought into the Hillbrook Circle Development and the residences were connected to the public water system. The previously used residential groundwater wells were either abandoned, retrofitted as monitoring wells (see Figure 1-2), or the residences chose to maintain the open well for potential future non-potable uses. In all cases, the well service line to each residence was disconnected from the internal plumbing.

As discussed in Section 1.2 above, the SVE remedy has been approved by USEPA and PADEP as an alternative to the FDA/MA soils remedy identified in the ROD and it is understood that USEPA is pursuing a formal Amendment to the ROD in parallel with the completion of this design. In addition, a Pilot Test Work Plan to evaluate accelerated in-situ bioremediation as a supplement or potential alternative to the ROD extraction, aboveground treatment, and reinjection remedy specified for MPA groundwater was conditionally approved by USEPA in a letter dated January 17, 2002. The construction of the Pilot Test system was completed in June 2003, and following laboratory scale testing of nutrients, a nutrient mix was selected and the field test was initiated at the end of December 2003.

In response to a request from USEPA, Golder Associates, on behalf of the CSDG, proposed a schedule to USEPA on November 27, 2002 for completing the design of the remaining remedial action components. The schedule, which was approved by the USEPA on December 23, 2002, divided the design into two parallel paths so that the pilot testing of accelerated in-situ bioremediation for the MPA groundwater can be performed concurrent with the design and implementation of the remaining remedial components for MPA soil and FDA/MA groundwater and soil, which are addressed in this Report. The design of the MPA groundwater remedial

action will be initiated following the completion of the accelerated in-situ bioremediation pilot test.

1.5 Report Organization

Design information for each remedial action component for FDA/MA soils, FDA/MA groundwater, and MPA soils is presented separately in Sections 2.0, 3.0, and 4.0, respectively. These sections address the ROD Performance Standards for each remedial action component along with clarifications of these standards required as a result of events (e.g., the 1999 fire in the MPA) and/or data acquired (e.g., the PDI) after the ROD was issued. These sections also include the design criteria and basis of design reports as well as specific design information for each individual remedial action component, including drawings, specifications, and a value engineering screen, where appropriate, as specified in the Consent Decree and the USEPA approved RDWP. The remainder of the Report is organized as follows:

- Section 5.0 presents the permit, permit equivalencies, and approvals required for implementation of the remedial actions;
- Section 6.0 presents the remedial action construction related plans; and,
- Section 7.0 presents the strategy for remedy implementation, including a projected remedial action implementation schedule.

2.0 FDA/MA SOIL REMEDY DESIGN

2.1 Project Description / Design Objectives

Based on the results of the Pre-Design Investigation, VOCs are the primary constituents of concern in FDA/MA soils and extend at concentrations exceeding the ROD soil cleanup standards (SCS) across the FDA/MA to depths of about 30 to 35 feet below ground surface (ft bgs). As discussed in Section 1.4, an SVE system will be designed to remove VOC impacts in subsurface soil and accomplish the primary remedial action objective for VOCs, namely, the protection of groundwater. Polychlorinated biphenyls (PCBs) were not detected at concentrations above the ROD SCS in the MA and were found to only marginally exceed the ROD SCS in the FDA at discrete locations, primarily at shallow depths. Therefore, PCBs will be addressed separate from VOC impacts during the initial site grading work. Excavation of the limited shallow PCB impacted soils and soil cover that will be either placed or is currently existing over isolated areas of deeper PCB impacts will accomplish the primary remedial action objective for PCBs (i.e., provide protection for potential ecological receptors).

The remedial construction of this remedy involves a substantial Site Preparation step, which includes the following:

- Improvement of the access road from Phoenixville Pike to the FDA/MA portion of Site, including crossing of the Williams Transco pipeline right-of-way;
- Providing access controls to the construction area;
- Providing electrical power from utilities along Phoenixville Pike to the FDA/MA;
- Implementing erosion and sedimentation control measures;
- Removal of trees and clearing and grubbing of the construction areas (as needed);
- Removal of surface debris and remnant equipment from the FDA and the identification and removal of any chemical and hazardous waste products that may be located in the FDA/MA;
- Removal of PCB impacted soil piles and off-site soil reuse/disposal;
- Removal of PCB impacted surficial soils (2-foot depth) and off-site soil reuse/disposal;
- Dewatering the existing excavations and removing vegetative matter from the sidewalls and bottom and off-site disposal;

- Backfilling existing excavations with non-PCB impacted soil pile materials and/or clean backfill and covering backfilled excavation with low permeability fill; and,
- Final grading and tree removal (as needed) of FDA and MA to prepare suitable working surface to install and operate SVE system.

The FFS described Site Preparation to include the use of the existing excavations in the FDA as SVE extraction galleries. To facilitate this use, it was proposed that 2 feet of sidewall and bottom soils would be initially removed to increase the permeability of the sidewall and base soils. SVE well(s) would have then been screened within the excavations (backfilled with a higher permeability material) to effect the soils adjacent to the excavations. After further consideration of this approach, there are concerns that atmospheric air infiltration may short-circuit the SVE system should the intended low permeability cover not adequately restrict air flow. In addition, it is thought that VOC removal from soils adjacent to and directly below the excavation would be more effectively removed via SVE wells installed below the base of the excavations and adjacent to the sidewalls.

Alternatively, it is proposed that vegetative matter be removed from the excavations (to reduce future subsidence potential) prior to backfilling with clean fill and soil from non-PCB impacted soil piles (as delineated by soil pile samples GB-24, GB-25, GB-26, etc.). These backfill materials would be compacted. The excavations will be completed at the surface with a low permeability soil cover and vegetative layer. The isolated low concentration PCBs detected at the base and at depth within the sidewalls of the excavations will be covered by the backfill consistent with the remedial action objectives (see Section 2.3.1, Extent of PCB Impacts Requiring Remediation). This approach is also consistent with the procedure for leaving low concentration PCBs at depth at locations GB-35V and GB-35 as described in the USEPA approved FFS (FFS Section 4.2.1, Site Preparation). Table 2-1 illustrates the locations where low concentration PCBs will be left at depth and covered either by existing soil or by backfill of the excavations.

Once the Site Preparation is completed, the SVE system will be installed, which includes the following major components:

- SVE well installation;
- Soil vapor collection system; and,
- VOC treatment system.

Once the SVE system is constructed, it will be operated, maintained and monitored in accordance with the plans and procedures presented herein. This design also includes proposed procedures for determining when to shut down the system and to verify that the performance of the system has met the remedial action objective (i.e., protection of groundwater).

From a sequencing standpoint, Site Preparation activities in the FDA must be completed prior to the installation of the SVE system in this area. However, only rough grading and tree removal (as required) needs to be completed prior to the installation of the SVE system in the MA. Therefore, from a construction staging perspective, Site Preparation (in the FDA) and SVE system installation (in the MA) could potentially be performed concurrently. It will be left to the Remedial Action Contractor to determine what is the most efficient sequencing of construction activities while maintaining appropriate protection of workers and the environment from contamination.

2.2 Design Criteria

This section describes the criteria that will be utilized for the design of the Site Preparation activities and the SVE system and, as such, fulfills the Design Criteria Report requirements of the Consent Decree.

2.2.1 ROD Requirements

Section X, Part D of the USEPA ROD lists Performance Standards for the ROD FDA/MA soil remedy (i.e., excavation of VOC impacted soil, off-site treatment and disposal). As a result of USEPA's approval of the SVE alternative remedy, and pending ROD Amendment, many of the ROD-specified Performance Standards directly related to the excavation remedy are no longer applicable to the SVE system. Moreover, it is anticipated that the pending ROD Amendment, which was described in Section 1.0, will specify requirements for the alternative remedy consistent with the description presented in the USEPA approved FFS. However, the existing ROD Performance Standards that address general excavation and site work (i.e., ROD Section X, Part D, Nos. 2, 3, 5 (backfill only), 7, and 8) remain at least partly applicable to the Site Preparation component of the SVE alternative remedy and therefore are discussed individually below.

ROD Performance Standard X.D.2

Structural stability of open excavations shall be maintained with temporary shoring or engineering measures as appropriate. Excavation will begin using a backhoe, and the sides of the excavation area shall be cut back to a minimum 2 to 1 slope to prevent sidewall failure. Air monitoring shall be conducted during excavations to ensure safety of Site workers and nearby residents living in the vicinity of the Site.

Applicability of ROD Performance Standard X.D.2

With the exception of removing vegetative matter from the sidewalls and base of the two existing excavations, no excavations deeper than 2 feet will be completed as part of the Site Preparation work. It is not anticipated that structural bracing or slope cutbacks will be required to safely complete the removal of vegetative matter. Further, trenching and excavations for the SVE system will be limited to the installation of collection piping and foundations. No persons shall be allowed to enter any excavation unless supports or slope cutbacks are provided and/or engineering analyses indicate safe working conditions. Even under these conditions, entry will be strictly limited. Even though the planned new excavations are shallow and air emissions are expected to be minimal, some VOC impacted soils may be encountered. Therefore, air monitoring will be conducted during the limited excavation work to ensure the safety of Site workers and nearby residents.

The type, nature and frequency of all air monitoring will be in accordance with the Health and Safety Plan (HASP). PID readings will be taken around the work zone and air monitoring will be conducted in accordance with the HASP. PID readings will be taken at the Site boundary a minimum of 3 times per day when intrusive or contaminated soil handling operations are occurring. PID readings will be taken at the school a minimum of once per day when intrusive or contaminated soil handling operations are occurring. Dust and particulate matter emissions monitoring using a Mini-Ram will be performed if there is visual evidence of dust emissions from any intrusive or contaminated soil handling activities, which cannot be contained by engineering controls. PCB concentrations associated with the dust emissions will be calculated using the maximum reported soil PCB concentration.

ROD Performance Standard X.D.3

Sediment and erosion controls and temporary covers will be installed to protect exposed soil from the effects of weather consistent with PADEP's Bureau of Soil and Water, Conservation

Erosion and Sediment Pollution Control Manual. Erosion potential shall be minimized. Further, controls in the form of Site grading to improve land grades, cover soils, vegetation, and drainage channels to reduce erosion potential for surface runoff may be required to minimize erosion. Contaminated soils shall be prevented from being washed into on-site surface water and adjacent uncontaminated and uncontrolled wetland areas during remedial action implementation. The extent of erosion control necessary will be determined by EPA, in consultation with PADEP, during the remedial design phase.

Applicability of ROD Performance Standard X.D.3

Sediment and erosion controls will be installed consistent with PADEP's Bureau of Soil and Water Conservation Erosion and Sediment Pollution Control Manual in addition to Chester County Soil Conservation District requirements. Controls will be provided to protect and reduce the erosion potential from exposed soil stockpiles, excavated areas, and other disturbed soils, reduce surface water run-on to the Site and reduce sediment runoff.

ROD Performance Standard X.D.5

If the post-excavation sample concentrations are below all the cleanup levels, the excavation will be backfilled using clean soil. Clean borrow material will be brought in to restore the excavation to original grade. Backfilling will be performed, and the material will be compacted to minimize the potential for subsidence. The excavation area shall be covered with a layer of cover soil and revegetated with native plant material until a viable cover is established. Any on-site landscaping will be in accordance with Office of the Federal Executive; Guidance for Presidential Memorandum on Environmentally and Economically Beneficial Landscape Practices on Federal Landscaped Grounds, 60 Fed.Reg. 40837 (August 10, 1995), which is a "to be considered" requirement.

Applicability of ROD Performance Standard X.D.5 (Backfill Provisions Only)

Once the excavation work is completed, the excavations will be restored to the original grade. All "clean" backfill soil from off-site sources used during remedial construction shall be from environmentally clean sources and shall meet specific requirements, as discussed in Section 2.4, item 21, which specifies that clean-fill shall meet the more stringent requirements of either the Soil Clean-up Standards or the PADEP clean fill policy dated April 24, 2004, and as provided in the Technical Specifications. Soil from non-PCB impacted soil piles will only be used to backfill the base of the two existing excavations. These same areas will be actively remediated by the

SVE system. The backfill material will be compacted to minimize subsidence. All soil excavation areas, including the existing excavations, shall be covered with a layer of low permeability cover soil and revegetated until a stable cover is established. On-site landscaping (if needed) will be performed in accordance with Office of the Federal Executive; Guidance for Presidential Memorandum on Environmentally and Economically Beneficial Landscape Practices on Federal Landscaped Grounds, 60 Fed. Reg. 40837 (August 10, 1995), which is a "to be considered" requirement.

ROD Performance Standard X.D.7

RCRA listed constituents will exist in the excavated soil, therefore, the remedy will be implemented consistent with the following substantive requirements, which are applicable to on-site activities, of Pa. Code §§262.11 – 262.13 (relating to hazardous waste determination and identification numbers), 25 Pa. Code §262.34 (relating to pretransport requirements); 25 Pa. Code Chapter 263 (relating to transporters of hazardous wastes); and with respect to the operations at the Site generally, with the substantive requirements of 25 Pa. Code Chapter 264, Subparts B-D, I (in the event that hazardous waste is generated as part of the remedy).

Applicability of ROD Performance Standard X.D.7

The USEPA policy document *Management of Remediation Waste Under RCRA* (EPA 530-F-98-026) will be used to determine whether or not remediation wastes generated via the alternative SVE remedy, including the Site Preparation work, are considered RCRA hazardous wastes. This policy states that contaminated environmental media can become subject to regulation under RCRA if they "contain" hazardous waste, which would be considered under two circumstances (1) when they exhibit a characteristic of hazardous waste; or (2) when they are contaminated with concentrations of listed hazardous waste constituents above health-based levels. This "contained-in determination" will be performed on the remediation waste generated during the implementation of the alternative remedy in order to assess whether the management, transportation and disposal of the remediation waste are subject to RCRA Subtitle C requirements and Pennsylvania hazardous waste management regulations. It should be noted that the Commonwealth of Pennsylvania has adopted the Title 40, Code of Federal Regulations, with exceptions, as its Hazardous Waste regulations.

While remediation wastes (e.g., excavated PCB-impacted soil) generated from the implementation of this remedy may contain RCRA listed VOC constituents, these wastes should

not exhibit a characteristic of ignitability, corrosivity, or reactivity, nor are the concentrations of the VOC constituents expected to exhibit the characteristic of toxicity (i.e., exceed TCLP limits). In accordance with the USEPA Technical Assistance Document for complying with the TC Rule and implementing the Toxicity Characteristic Leaching Procedure (TCLP) (USEPA 902/B-93/001 HWC, May 1993), if soil concentrations (expressed as mg/kg) are less than 20 times the TCLP limit (expressed as mg/l), it can be conservatively assumed that the material is not characteristically hazardous and additional profiling is not required. The majority of VOC concentrations in surficial soils (0 to 2 ft bgs) that will be excavated in the FDA are at concentrations less than 20 times the TCLP limit and therefore would not exhibit the toxicity characteristic based on this document. Under the Land Disposal Restriction rule, remediation wastes containing contaminant concentrations less than 10 times the UTS may be disposed of within a RCRA Subtitle C landfill without pre-treatment. Excavated soils containing VOC concentrations greater than 20 times the TCLP limit or 10 times the Universal Treatment Standard (based on the PDI data) will be stockpiled separately from soils having VOC concentrations less than 20 times the TCLP limit and less than 10 times the Universal Treatment Standard Site Rule (UTS). All soils intended to be shipped off-site for disposal will be analyzed for total extracted and TCLP VOCs to verify the acceptability of the wastes for disposal at a RCRA Subtitle C facility with or without pre-treatment. Those surficial soils that contain VOCs, at lower concentrations will be handled and stockpiled separately and tested to determine whether they exhibit the toxicity characteristic and that the concentrations of RCRA listed VOC constituents do not exceed health-based levels (USEPA Region III Risk-Based concentrations table 10/9/2002 for Residential Soil Exposures)[2]. Consequently, it is expected that the PCB-impacted surficial soils excavated from the FDA will not be considered RCRA hazardous waste in accordance with the contained-in policy and can be disposed of at a RCRA Subtitle C landfill. This same procedure will be applied to other remediation waste generated during the implementation of the remedial action.

While it is not expected that the remediation wastes will be considered RCRA hazardous, they might require pre-treatment prior to disposal should the VOCs exceed ten times the UTS. Soils exceeding ten times the UTS will require pre-treatment prior to disposal to provide a 90% reduction of VOCs or a reduction of VOCs to less than ten times the UTS.

[2] The USEPA RBC table values are conservatively based and correspond to a risk of $1x10^{-6}$. The USEPA remediation waste management guidance utilizes a range of $1x10^{-4}$ to $1x10^{-6}$ as the acceptable risk range. Notably, based on the PDI results, all VOC concentrations in surficial soils within the FDA are expected to be less than the USEPA Region III RBC value converted to a risk level of $1x10^{-4}$.

The PDI data also suggest that the USEPA Toxic Substance Control Act (TSCA) will not apply to the PCB-impacted soils removed from the FDA as TSCA regulates PCB-impacted soils and debris with concentrations greater than 50 mg/kg. All detections of PCB in soils in the FDA/MA are well below 50 mg/kg. Therefore, it is expected that much of the remediation wastes will be able to be disposed of in a permitted solid waste landfill, possibly as intermediate cover material.

ROD Performance Standard X.D.8

Fugitive dust emissions generated during remedial activities will be controlled in order to comply with fugitive dust regulations in the federally-approved SIP for the Commonwealth of Pennsylvania, 25 Pa. Code §§123.1 – 123.2 and the National Ambient Air Quality Standards for Particulate Matter in 40 C.F.R. §§50.6 and Pa. Code §§131.2 and 131.3.

Applicability of ROD Performance Standard X.D.8

Fugitive dust emissions generated during remedial activities will be controlled in accordance with this Performance Standard.

2.2.2 ROD Amendment Requirements

As discussed in Section 2.2.1, a ROD Amendment has not as yet been issued for the SVE alternative remedy. It is anticipated that a ROD Amendment will be issued prior to finalizing the Remedial Design and that performance objectives for the comprehensive SVE alternative remedy for the FDA/MA soil will be clarified in the Amendment. This design has assumed that any performance standard identified in the ROD Amendment will be consistent with the description of the SVE alternative remedy presented in the FFS.

2.2.3 Additional Regulatory Requirements Identified in FFS

The USEPA-approved FFS identified additional regulatory requirements applicable to air emissions from the SVE component of the alternative remedy. Air emissions from the SVE system will be controlled by an on-site treatment system designed for the VOCs of interest. Specifics of the VOC emissions control system are discussed in Section 2.5.5. The air emissions control system will be designed and operated in compliance with the State and Federal air regulations, including Air Emissions Standards for Equipment Leaks (40 CFR §264.1030-1063; as applicable), National Emission Standards for Hazardous Air Pollutants (as applicable), Best Available Technology regulations (25 PA Code §127.12), and Pennsylvania guidelines for controlling air emissions at remediation projects.

2.2.4 Operation and Maintenance Requirements

There are no operations and maintenance (O&M) requirements for the Site Preparation component of the remedy that warrant particular attention in the design. There are numerous O&M requirements for the SVE system, such as the requirement to monitor and balance the operation and performance of the system that are incorporated into the design. An O&M Plan is provided in Appendix E. The O&M Plan is a guideline for the ongoing remediation activities taking place and will require periodic modifications during different phases of the remedial action to reflect the changing conditions and operations, as appropriate.

2.3 Design Basis

The design basis for the SVE alternative remedy includes Site-specific technical information and, as such, fulfills the Design Basis Report requirements of the Consent Decree. This information includes soil sample analyses results used to define the lateral and vertical extent of soil impacts and other technical data presented in the PDI Report, and the results of the SVE pilot study presented in the SVE Pilot Study Report, as summarized below.

2.3.1 PDI Findings

The following summarizes the findings of the PDI Report that are pertinent to the design of the SVE remedy.

Geologic Characterization of Subsurface Soil

Based on soil boring data from the PDI, the subsurface unconsolidated geologic materials underlying the FDA/MA were categorized into the following three general geologic units:

- *Upper clay (Unit 1)* – consisting of a locally disturbed surficial silty clay unit with an average thickness of about 5 feet extending to depths of about 10 feet in places;
- *Interbedded zone (Unit 2)* – consisting of silty sands, silts and clays interbedded with thin, discontinuous layers of sands and gravels lying about 20 to 25 feet below the upper clay; and,
- *Lower clay (Unit 3)* – consisting of stiffer and more homogeneous silty clays lying below the interbedded zone and on top of the underlying carbonate bedrock that variably lies between about 45 to 60 feet bgs.

Figure 2-1 presents a generalized fence diagram of the unconsolidated geologic materials underlying the FDA/MA. The depth to groundwater measured during the PDI ranged from approximately 60 to 70 feet bgs below the FDA/MA (fall of 2001). Groundwater levels measured on January 17, 2003 range from approximately 63 to 79 ft bgs below the FDA/MA and have risen since the lows detected in the fall of 2002.

Physical Characterization of Subsurface Soil

Several subsurface soil samples were collected in the FDA/MA for testing of various geotechnical parameters, including particle size, Atterberg limits, unconsolidated/undrained compressive strength, and bulk density. These data provided initial geotechnical soil properties to be used in conjunction with the soil boring logs and hollow-stem auger drilling split-spoon blow counts for the design of excavation sidewall stability, as needed.

Chemical Characterization of Subsurface Soil

VOC impacted soils were identified in both the FDA and MA, while PCB-impacted soils were primarily limited to surficial soils in the FDA. Figures 2-2 and 2-3 provide the subsurface chemical data obtained during the PDI. The following summarizes the extent of VOC and PCB soil impacts in the FDA/MA.

Extent of VOC Impacts Requiring Remediation

The majority of the subsurface soil VOC impacts were contained within the lower portions of the upper clay and throughout the interbedded zone. Smaller amounts were found in the upper portions of the lower clay. The VOCs of interest are tetrachloroethylene (PCE), trichloroethylene (TCE), and 1,1,1-trichlorethane (1,1,1-TCA) and their natural breakdown products. Concentrations of VOCs within the lower portion of the upper clay (Unit 1) and the interbedded zone (Unit 2) were variable, with a small number of samples exceeding concentrations of 1,000 mg/kg total VOC at depths approaching 25 feet (e.g., GB-2-B2 in the MA and GB-39 in the FDA). Elevated VOC concentrations in the lower portion of the interbedded zone (Unit 2) and upper portion of the lower clay (Unit 3) occurred over a smaller aerial extent than the shallower zone and at generally lower concentrations. VOC impacts quickly diminished with depth generally below about 30 feet bgs in the upper portion of the lower clay resulting in a relatively clean zone existing on top of the bedrock surface as shown on Figure 2-4.

Overall, the lateral and vertical extent of VOC impacts has been sufficiently delineated for the purpose of designing the SVE system. However, as outlined in the FFS, the lateral and vertical distribution of VOCs in discrete areas in the FDA/MA will require confirmation via soil samples collected from SVE well borings installed in these areas during remedy implementation. These areas include:

- the northern portion of the MA;
- the northern excavation in the FDA; and,
- the southern excavation in the FDA.

Except for the areas noted above, the lateral and vertical extent of VOC impacts in all other areas of the FDA/MA has been confirmed during the PDI. Agency approval of the additional delineation will be obtained prior to completing the SVE well installation program, as detailed in Section 2.5.1.

Figure 2-4 presents a simulation of the distribution of VOCs relative to the generalized geologic strata discussed above.

Extent of PCB Impacts Requiring Remediation

Based on the PDI findings, PCBs are not present at concentrations above the ROD SCS in the MA. PCBs primarily exist in shallow soils and soil piles within the FDA. The PCB concentrations are low and concentrations above the ROD SCS (i.e., 1 mg/kg) are only sporadic. The average concentration of the PCB detections exceeding the ROD SCS is approximately 6 mg/kg. The deepest PCB detection above 1 mg/kg occurs north of the northern excavation in boring GB-35V (4.6 mg/kg at 16 feet bgs). Figures 2-2 and 2-3 present a summary of PCBs detected in the FDA/MA soils.

The concern for PCBs raised in the USEPA ROD focused on potential ecological impacts. The USEPA Technical Memorandum (USEPA, 1996) did not propose a groundwater protection SCS for PCBs. PCBs have a low mobility in subsurface soil, which is confirmed by the shallow depths that PCBs were detected. The low concentrations detected and the shallow depth of detection reinforce the conclusion that PCBs do not pose a migration to groundwater concern. Therefore, the design objectives for the remediation of PCBs will focus on eliminating the limited potential for direct contact exposure pathway for ecological receptors. As shown in Table 2-1,

once PCBs are removed from surficial soils and soil piles, the few remaining locations that exhibit PCBs greater than the ROD SCS will be left covered by approximately 3.5 feet or more of soil either from existing soil, by backfill of the excavations, or final grading, and therefore will be inaccessible to potential ecological receptors.

The PCB data from the PDI were compared to the Pennsylvania Statewide Health Standards for both residential direct contact exposures and the soil to groundwater pathway. Notably, only one detection of PCB (12 mg/kg of Aroclor 1254 at sample location GB-28) exceeds the residential direct contact standard (4.4 mg/kg for Aroclor 1254) and no detections of PCBs exceed the soil to groundwater standard. Sample GB-28 was collected from a soil pile in the center portion of the FDA, which is scheduled for removal and off-site disposal as part of Site Preparation. Therefore, based upon the PDI data and the Pennsylvania Statewide Health Standards, institutional controls may not be required to regulate the future use of the FDA/MA portion of the Site relative to PCB concentrations remaining after remediation. A comparison to relevant standards and the need for institutional controls for the FDA/MA portion of the Site will be determined when the remedial action, including operation of the SVE system, is completed.

However, discussions with the property owner, Lloyd Balderston, and developer have already occurred in regard to possible limitations on the future use of certain areas of the Site. It is recognized that, to the extent necessary, institutional controls for both VOC and PCB impacted soil in the FDA/MA will be considered.

The PCB sample analytical results obtained during the PDI are presented on Figure 2-5. The proposed area of PCB-impacted soil removal was determined consistent with the PDI data and the area of activity surrounding the two existing excavations and the PCB-impacted soil piles, as shown on Figure 2-5. As discussed in the approved FFS, PCB impacted soil will be removed from soil piles within the designated area. The remaining surficial soil located less than 2 feet below the proposed final grades shown on Figure 2-5 will be excavated. In addition, the excavations will be dewatered and vegetative matter removed. The proposed final grades are estimated to be consistent with the original ground surface elevations (prior to placement of soil piles and construction of the two existing excavations). Final grades will be established by backfilling with clean fill. No further delineation or post-excavation sampling is proposed within the designated area. Non-PCB impacted soil piles that are not designated to be removed based on their low PCB content will be used as backfill from the base of the excavations to a minimum of

2 feet below the final grade. The PDI data indicate that these soil piles contain varying levels of VOCs, which will subsequently be addressed by the SVE system.

2.3.2 SVE Pilot Study Findings

SVE Pilot Study Performance Summary

The results of the SVE Pilot Study conducted in the MA are presented in the SVE Pilot Study Report and contained in Appendix A of the PDI Report. These results have demonstrated that the pilot SVE system met the performance criteria defined in the USEPA approved SVE Pilot Study Work Plan (PSWP, Golder Associates, September 2001) as evidenced by the following observations compared to the PSWP success criteria:

- Mass removal rates of approximately 18 pounds per day from a single well were attained (PSWP criteria - > 1 lb/day);
- Air permeability was estimated to be approximately $6x10^{-9}$ cm^2 (PSWP criteria - > $1x10^{-9}$ cm^2);
- The radius of influence was estimated to be 25 feet (PSWP criteria - > 10 feet); and,
- Air flow rates for the three SVE study wells combined were expected to be over 20 scfm (PSWP criteria - > 20 scfm).

The pilot study also indicated that the zones of potentially higher permeable material (i.e., the thin, discontinuous layers of sands and gravel within the interbedded zone) did not result in preferential soil vapor flow paths. In fact, the results indicated that the interbedded unit (which contains the majority of the VOC mass) responded uniformly as a sandy/silty material. This homogeneous domain is more favorable for SVE than a domain having preferential flow paths of highly permeable areas. The uniform vertical and horizontal performance results observed during the study will also reduce the need for the installation and operation of a system with targeted intervals in a full-scale SVE system, i.e., fewer wells with longer screens can be used. In addition, the upper clay will provide a natural low permeability cap over the system, minimizing ambient air infiltration and maximizing vapor extraction from the most impacted unit, the interbedded zone that lies directly beneath the upper clay.

Given that the results from the pilot study indicated a Radius of Influence (ROI) of 25 feet and allowing for a 30% overlap, a well spacing of 35 feet (17.5 ft. radius) has been used to guide the design of the SVE well layout (see Section 2.5.1). The pilot study also showed that flow rates

were generally independent of location and depth, and that increased flow rates may be achieved by increasing the well screen lengths. As such, the pilot study report indicated that two sets of approximately 20 to 30-foot well screens will be considered: one set (10- to 30-foot screens) would be located from near ground surface to approximately the base of the interbedded zone and the second set (15- to 20-foot screens) would be located from the base of the interbedded zone into the lower clay.

The lower pressure responses obtained during the testing of the deep zone did not indicate a need for closer well spacing, as the mass residing in the deep zone is substantially less than in the interbedded zone. In fact, a larger well spacing could be utilized for the deep zone given the considerably lower VOC concentration[3]. Therefore, the duration for operation of the SVE system is expected to be approximately the same for the interbedded and lower clay zones. The rate of VOC mass removal will be substantially higher in the interbedded zone, where the relative mass of VOCs is higher.

2.3.3 Estimated Vapor Flow, Concentration, and Blower Sizing

The Pilot Study Pneumatic Response Test (PR Test) results showed that flow rates in the interbedded zone were between 6 to 8 scfm at the applied vacuum levels (80 to 120 inches H_2O). The pilot SVE wells were constructed with 5-foot screens; thus, about 1.2 to 1.6 scfm was developed per foot of well screen. Therefore, potentially 20 scfm could be developed for a well screen of 20 feet or more in length. Assuming a total of 50 SVE wells (35 wells in the upper clay/interbedded zone (referred to as shallow/intermediate wells) and 15 wells in the lower clay (referred to as deep wells)). Therefore, the flow rate for the full-scale SVE system could be approximately 900 scfm. Five of these wells, which have a screen length of 5 feet, will be reused from the pilot study so the flow extracted from these wells would be less.

The PR Tests also revealed that a vacuum level was reached at which flow rate no longer increased, and further increases in vacuum actually reduced the flow rate upon converting to standard temperature and pressure. This finding indicates that regardless of the length of well screen, the formation appears to limit the maximum amount of flow that can be drawn through the soil matrix. This was confirmed by an air flow modeling exercise using AIRFLOW/SVE

[3] While utilizing a greater well spacing in the deep zone will result in fewer soil vapor pore volumes removed, given the considerably lower VOC concentrations at depth, it is expected that less pore volumes will be needed to accomplish the required VOC removal.

software developed by Waterloo Hydrogeologic. The model showed nominal increases in vapor flow with an increased screen length. It is expected that air flows from between 10 to 20 scfm will be obtained using 20-foot screens. Therefore, 900 scfm is expected to be the maximum flow that could be obtained from the current SVE system layout and lower flows in the range of 700 to 800 scfm are likely. As a contingency, the SVE blower system will be sized for 1200 scfm providing 300 scfm of excess capacity should air flow rates be greater than expected or if additional wells are determined to be needed. As described in Section 2.5.4, the blower system will consist of two 600 scfm blowers manifolded together such that each blower can operate any part of the system. The use of a two-blower system will provide redundancy and allow for continued operation of the more critical SVE wells (i.e., those located in areas that contain higher concentrations of VOCs) during temporary blower shutdown for preventative maintenance or mechanical problems.

The applied vacuum testing results indicated that a full-scale system may be operated in the range of 80 to 120 inches of H_2O (5.9 to 8.8 inches of Hg) for maximization of flow rate. Flow rates developed in the deep zone (i.e., lower clay) were slightly less than in the interbedded zone. In general, however, a substantial difference with depth was not observed. The blower used during the Pilot Test was a positive displacement blower rated to 16 inches of Hg (217 inches of H_2O). The blower system for the full-scale SVE system will have a similar rating (14 to 16 inches Hg). The SVE piping system will be sized such that no less than 12 inches Hg can be obtained at each SVE well. This will allow for additional contingent vacuum above those observed during the pilot study.

The Pilot Study Mass Removal Tests (MR Tests) estimated mass removal rates. Notably, the Pilot Study was conducted in an area having some of the highest VOC concentrations. During the MR Test 1 (shallow zone), total organic vapor readings were generally consistent throughout the 5-day test, which ranged between approximately 5,500 to 7,000 ppmv, and averaged approximately 6,200 ppmv. The calculated mass removal rate for the MR1 test, based on laboratory analyses of soil vapor samples, was approximately 18 pounds per day.

During MR Test 2 (deep zone), total organic vapor readings decreased over the course of the test, from initial concentrations ranging between 100 to 600 ppmv, to final steady concentrations between 40 and 60 ppmv. The calculated mass removal rate for the MR2 test was less than 1

pound per day, which is consistent with the substantially lower amounts of VOCs in the lower clay.

The full-scale SVE system mass removal rates are expected to be proportionally less than those experienced in the Pilot Study since most of the SVE wells will be extracting soil vapor from areas having substantially less VOC concentrations. An estimate of initial mass removal rates is presented in Appendix A-1. Based on these estimates, the entire SVE system is anticipated to initially remove VOCs at a rate of approximately 57 lb/day. This initial rate is anticipated to be followed by considerably decreasing mass removal rates over time.

A review of the expected VOC concentrations following initial start-up of the SVE pilot system indicate that the SVE vapors will not exceed 10% of the Lower Explosive Limit. Therefore, the SVE blower system does not need to be explosion proof. As described in Section 2.5, a Total Hydrocarbon Analyzer will be used to monitor the untreated SVE vapors. If the concentrations in the SVE vapors approach 5% of the LEL, the SVE blowers will be interlocked to shut down. SVE well flows will be balanced, if required, to maintain concentrations below 5% LEL during initial start-up.

In summary, further evaluation of the SVE Pilot Study Results and PDI data indicate the following design basis:

- Flow Rate: 900 scfm is expected to be the maximum flow from 50 SVE wells, lower flows are likely;
- Blower System: will be sized for 1,200 scfm (rates to 16 inches Hg) to accommodate the maximum flow and provide capacity for additional wells, if needed; and,
- VOC Mass Removal Rate: initially estimated at 57 lb/day. This initial VOC removal rate is expected to decrease substantially following the initial phase of operation.

2.3.4 Estimate Condensate Generation

Soil vapors extracted from the subsurface are typically at 100% relative humidity. Condensation is generated in the system by a decrease in temperature or increase in pressure. This condition is exacerbated during the winter season, when piping or equipment may be exposed to ambient conditions that are much cooler than the vapor inside the pipe. Condensation can be minimized

by maintaining the relative humidity of the vapor below saturation using heat tracing or insulation or by burying pipelines.

Calculations were performed to estimate the amount of condensate that may be generated during operation of the full-scale SVE system in order to properly size condensate collection and storage equipment. "Worst case" (i.e., winter) conditions were used in performing the calculation. Using data from the pilot test, expected ambient conditions, and published pyschrometric charts and data, the worst-case condensate generation for the full-scale SVE system was estimated to be approximately 25 gallons per day (gpd). Much of this condensate will drain back to the well from which it was extracted by sloping the laterals. Therefore, the condensate generation rate at the blower building is expected to be much less than the worst-case conditions of 25 gpd. The calculations used to estimate condensation rates are provided in Appendix A-2.

2.4 Site Preparation Design

This section includes the limited excavation and off-site disposal of PCB-impacted soil in the FDA.

The following describes the Scope of Work for Site Preparation in a stepwise manner. Notably, the sequencing and details of these steps may be altered by the remedial action contractor (RAC) for schedule, constructability, safe of workers, protection of the environment, and efficiency reasons. The RAC will be required to submit a Construction Sequence & Staging Plan as part of their Site Management Plan (SMP) for review by the Owner's Representative and Remedial Designer, as a formal pre-construction submittal, prior to mobilization to the Site. Further details to complete these individual steps are contained in the Technical Specifications.

1. Contractor mobilization to Site;
2. Complete access roadway improvements;
3. Install erosion and sedimentation controls including rock construction entrance(s);
4. Install temporary construction fencing and security measures around perimeter of FDA/MA work zones, as needed;
5. Survey and/or locate work, including, but not limited to, establishing benckmark(s); extent of PCB-impacted soil to be excavated; proposed staging and soil stockpiling locations; proposed SVE well pipeline trench locations; and proposed SVE blower building and vapor treatment area. Designate clean and contaminated areas and set-up work zones as required in the RAC Health and Safety Plan (HASP);

6. Construct an equipment/truck decontamination station at the exit of the FDA soil remediation area, and install a construction truck tire clean off (heavy stone pad) at the Site exit.

7. Clear trees and vegetation (as needed) and grub roots that will interfere with the work identified and located in Step 5;

8. Install construction trailer(s), sanitary facilities, and utilities (electric power and phone lines) and other items necessary to support construction activities;

9. Remove portions of existing fence surrounding the FDA to complete work, as necessary;

10. Remove surface debris and existing truck trailer frame from FDA (stage, decontaminate as necessary, and reuse/dispose off-site);

11. Prepare area and receive temporary storage tank(s)/container(s) for surface water to be removed from the existing excavations in the FDA;

12. Characterize soil and debris in existing roll-off in the FDA[4]. Assess condition of roll-off. If roll-off is in satisfactory condition, stage roll-off outside excavation area and dispose of appropriately after the contents are characterized. If roll-off is not in satisfactory condition, transfer soil and debris to a new roll-off container or stockpile. Decontaminate (to the extent necessary) and dispose of existing roll-off container. Characterization of roll-off container contents may be completed earlier in schedule to facilitate removal;

13. Prepare soil stockpile areas or arrange for staging area for roll-offs following design in Section 2.4.4, which includes E&S management techniques. At a minimum, two PCB-impacted soil stockpiles or segregated roll-offs will be used, one for soil having low concentrations of VOCs (less than 20 times the UTS limits) and one for soil having higher concentrations of VOCs. Additional stockpile roll-offs or containers may be used for debris and other types of remediation waste;

14. Remove PCB-impacted soil from existing soil piles in the FDA and place in appropriate soil stockpiles or roll-offs, or pre-characterized and shipped directly off-site for disposal;

15. Remove accumulated water from two existing excavations in the FDA and place liquid in the temporary storage tank(s)/container(s). Sample, characterize, and dispose of water appropriately[4]. Settled solids in tank shall be removed, solidified if necessary, and placed in appropriate soil stockpile. Decontaminate storage tank(s)/container(s) and remove off-site;

16. Remove accumulated vegetative matter from sidewalls and base of existing excavations. Dewater, solidify with absorbent and/or mix with soil in a stockpile to the extent necessary to remove free liquids;

17. The existing excavations will be backfilled immediately after dewatering and removal of vegetative matter. Backfill existing excavations using soil from non-PCB impacted soil piles, as a general clean fill, to less than 2 feet below final grade surface, and then low

[4] Consider implementing remediation waste characterization early in the schedule (e.g., at or prior to mobilization), to the extent practical, to facilitate implementation of subsequent steps possibly eliminating the need for soil piles.

permeability clean fill to within 6 inches of the final grade and finished with 6-inch topsoil layer to final grade and vegetate. Compact using appropriate methods to reduce future subsidence;

18. If, during the excavation activities, open excavations become filled with water, then the excavations can be dewatered using a submersible pump, and water will be placed in a temporary storage tank for settling, prior to sampling, characterization and disposal of the liquid. Stormwater will be diverted around excavations to minimize the potential for excavations to become filled with water;

19. Remove soil from remainder of designated PCB-impacted soil remediation area, including soil beneath PCB-impacted soil piles, as required, to provide 2 feet of clean fill over area. Place excavated soil in appropriate soil stockpile;

20. Sample and characterize excavated soil at a rate of one sample per 25 cubic yards[5]. Soil sampling and analyses will be performed in accordance with the Remedial Action Sampling and Analysis Plan. Remediation waste characterization will be performed in accordance with the contained-in determination;

21. Backfill shallow excavated areas with clean fill: 18 inches of low permeability general fill. Clean general fill can be obtained from off-site sources and shall be certified free of contamination or tested in accordance with the Soil Clean-up Standards or PADEP's Act II Standards for clean fill prior to use on-site. See Section 02223 of the Specifications for additional information on determining the requirements for clean fill. Backfilling of the 18-inch thick general fill layer will be performed in two compacted lifts to reduce future subsidence;

22. Final grading of the FDA shall be completed within 6 inches of material suitable for sustaining vegetative growth and, as necessary, to provide a smooth surface to facilitate installation and operation of the SVE system; and,

23. Review and present plan for remediation waste disposal to the Owner's Representative for acceptance prior to scheduled off-site transportation and disposal/reuse. The Owner's Representative will forward plan to Agencies for final acceptance. Following acceptance from Engineer and Agencies, receive hazardous waste roll-off containers or other transport vehicles for the transportation of remediation waste off-site for disposal/reuse.

2.4.1 Access Road

Currently, the existing gravel/earthen drive along the PECO right-of-way[6] is used to access the FDA/MA. The approximate alignment of this access road is shown on Figure 2-6A. Improvements to the access road are needed to allow adequate access for construction and future

[5] Consider implementing remediation waste characterization early in the schedule (e.g., at or prior to mobilization), to the extent practical, to facilitate implementation of subsequent steps.

[6] Previous drawings showed a PECO and Abandoned Railroad right-of-way. As discussed in Section 5.0, the Abandoned Railroad right-of-way no longer exists and PECO's right-of-way only extends to the Lupo residence.

O&M vehicles. The proposed improvements to the access road are shown on Figure 2-6A and Figure 2-6B, and include:

- Six inches of dense graded aggregate (DGA) placed on the surface of the existing gravel/earthen drive (see Detail 1 on Figure 2-6B);
- Construction of ditches parallel to the access road to divert stormwater to the existing culverts (see Detail 4 on Figure 2-6B);
- Placement of a woven geotextile below the DGA will be included in any locations determined necessary by a pre-construction walk-through by the RAC and Owner's Representative; and,
- Placement of additional gravel or DGA along the section of the road that crosses the Transcontinental Gas Pipeline right-of-way, if necessary (see Detail 3 on Figure 2-6B).

Two existing surface water drainage culverts lie below the access road. A structural analysis of the culverts has been completed and it has been determined that placement of additional DGA or other materials/aggregate is not required to adequately support anticipated construction loads (see Appendix A).

PECO and Williams Transco have been contacted about using and improving the access road within the PECO right-of-way and the Williams Transco pipeline right-of-way. Final designs will be reviewed with PECO and Williams Transco prior to initiating construction. Section 5.5 discusses crossings of the Williams Transco pipeline in more detail.

The existing easements and required access approvals to complete the remedial action construction are discussed in Section 5.9. Notably, a residence (Lupo property) lies just north of the access road and has a common access easement along the road with Mr. Lloyd Balderston who owns the surrounding property.

The RAC will be required to maintain the access road in a passable condition for residential vehicles and to repair any damage incurred to the access road during construction. Dust suppression will be provided as necessary to mitigate nuisance dust generated by trucks traveling along access roads. A final surface DGA layer will be installed at the completion of construction.

2.4.2 Access Controls

During construction, temporary fencing will be installed around the perimeter of the active work areas to limit public access. The existing fence surrounding the FDA will ultimately be dismantled, but may be used for temporary fencing. Following construction, a permanent fence will be installed to prevent public access to accessible aboveground features of the active SVE system. As discussed herein, following completion of Site Preparation activities, the FDA/MA will be graded and a vegetative cover established. All SVE collection piping will be below grade and SVE well heads will be enclosed in a dedicated building. Therefore, the only aboveground, post-construction, and accessible portions of the FDA/MA remedy will be the wellhead control building, SVE blower building or equivalent, electrical transformer, and the off-gas treatment system. The well head control and SVE blower buildings will be lockable. A permanent fence will be installed around these aboveground features, including an adjacent area to be used for the storage of equipment, vehicles, etc. Warning (i.e., no trespassing) signs will be posted along the fence in accordance with the Specifications contained in Appendix F. The layout of the permanent fence is shown on Figure 2-10 and fence details are shown on Figure 4-4. Additional signage will be posted clearly delineating the Williams Transcontinental right-of-way and identifying the construction entrance during construction.

2.4.3 Utilities

Electric power will be provided with a connection to PECO Energy Company 3 phase power service along Phoenixville Pike near the Site entrance. Power will be conveyed through PVC or steel conduit encased buried wire at 4160 Volts / 3 phase power service. The underground wiring will follow along the southern edge of the proposed access road to the Williams Transco pipeline easement. The wire will be placed in steel conduit within the easement and the conduit will be located no greater than approximately 18 inches below the existing grade to maintain adequate clearance over the pipeline. The existing grade will be raised 18 inches to provide adequate burial depth of the conduit for about 125 feet over the easement. The wiring will then continue underground to a PECO provided transformer near the anticipated location of the SVE blower building, where voltage will be reduced to the 480 / 277 volt requirements of the SVE system equipment. Additional information regarding electric power is included in Section 5.6.

Multi-wire telephone cable will be installed adjacent to the electric line to provide telephone connection for autodialer, common and emergency phone service, and potential future remote monitoring and control connections.

No water or sanitary service will be provided. Potable water will be supplied in containers (e.g., bottled water) for drinking, decontamination, and emergency wash use. Portable restrooms shall be provided during on-Site construction activities and during operation and maintenance, if warranted.

2.4.4 Soil Stockpile Design

Various stockpiles or dedicated roll-offs and staging areas will be prepared for remediation and general wastes and include, but are not limited to, the following:

- PCB-impacted soil – low VOC concentrations;
- PCB-impacted soil – high VOC concentrations;
- Non-PCB-impacted soil – high VOC concentrations (if required);
- Debris and general waste; and,
- Clean construction material (clean fill, gravel, etc.).

The number and type of remediation waste stockpiles may be further modified by the RAC in accordance with their Construction Sequencing and Staging Plan submittal, however, the following presents the minimum requirements for remediation waste stockpiles containing low and high VOC containing PCB-impacted or non-PCB impacted high VOC concentration soils:

- A diversion berm should be installed surrounding the stockpile footprint;
- The base of the stockpile footprint should be prepared and a synthetic fabric or other physical barrier installed as a separator above the underlying soil (liner not required for clean material stockpile);
- Stockpile side slopes should not be steeper than 1 foot horizontal to 1 foot vertical (1H: 1V). The size of each stockpile and total number of soil stockpiles will depend on the total amount of soil excavated;
- A plastic cover will be installed and maintained whenever materials are not being placed/removed from the piles to provide dust control, erosion protection, and reduce rainwater infiltration. The cover will be secured to the ground on the outside of the

diversion berm with sand bags, tires, or other weights to minimize stormwater contact with the stockpiled material. Tire nets will be employed as necessary to secure the plastic cover over the pile (cover not required for clean material stockpiles);

- Appropriate soil and erosion controls will be installed surrounding the stockpiles, including, but not limited to, silt fences and/or hay bales. See Section 4.4.6 for additional methods and procedures;

- The cover and berm of the soil stockpiles will be regularly inspected by the contractor to visually check the integrity of the cover, berm, and the cover anchoring system. Inspections will be documented and maintained on-site. Any liquid that may accumulate in a containment area will be pumped to the liquid storage tank(s)/container(s). Additional supplies of cover material, anchors, hay bales, and silt fence will be maintained on-site in case repairs are needed. Signs (sign not required for clean material stockpiles) labeled "Potentially Hazardous Materials" will be posted near the stockpiles as a health and safety warning; and,

- When soil is loaded from stockpiles onto trucks for off-site disposal, the stockpile cover and bottom fabric will be removed and disposed of with the soil.

Using the area delineated for PCB soil removal (Figure 2-5) calculations were made to estimate the amount of each type of PCB VOC-contaminated soil. These calculations are provided in Appendix A. It is estimated that a total of 240 cubic yards (cy) of PCB-impacted soil will be excavated.

As discussed previously in Section 2.2.1, ROD Performance Standard X.D.7, excavated PCB-impacted soil will be separated into two separate soil stockpiles based on VOC content. Soils that are expected to contain concentrations of VOCs less than 20 times the TCLP limit for the characteristic of toxicity and less than 10 times the UTS will be placed in the PCB-impacted "low VOC" soil stockpile. Except as discussed below, the majority of the soil removal will be in the PCB-impacted "low VOC" category. Soils that are expected to contain concentrations of VOCs above the concentrations stated above will be placed in the PCB-impacted "high VOC" soil stockpiles.

The only area expected to generate PCB-impacted "high VOC" soil is anticipated to be from the northern soil pile adjacent to boring BG-27. Calculations estimate that approximately 30 yd^3 of PCB-impacted "high VOC" soil will be excavated from this area. It is likely this material will be placed in lined roll-offs rather than soil piles. The remainder of soil excavated in the delineated area will be placed in the PCB-impacted "low VOC" soil stockpile, which is estimated to be 210 yd^3.

Using the soil stockpile design described in this section, as shown on Figure 2-7, and assuming a contingency of 20%, the overall length of the PCB-impacted "low VOC" soil stockpile would be approximately 90 feet and the overall length of the PCB-impacted "high VOC" soil stockpile would be approximately 20 feet. The RAC may alter the number and dimensions of the soil stockpiles as needed so long as the minimum requirements described in this section are met. The RAC shall determine suitable locations for the soil stockpiles such that they do not interfere with other construction activities.

Uncontaminated debris and waste equipment shall be accumulated in an area away from excavated PCB-impacted soil. The RAC may temporarily stage this waste where convenient and is not required to follow the design requirements for VOC contaminated soils.

Additional soils requiring off-site disposal that have not been impacted by PCBs will be generated during construction. These materials may contain concentrations of VOCs that exceed 20 times the TCLP for the characteristic of toxicity and will be separated as non-PCB-impacted "high VOC" concentration soils. All drill cuttings from installation of SVE wells (Section 2.5.2) shall be placed in the non-PCB-impacted "high VOC" soil stockpile or roll-offs. Stormwater will be diverted around open excavations. However, any accumulated water from the existing excavations in the FDA or stormwater that collects in new excavations shall be placed into a liquid storage tank. The water in this tank shall be sampled, characterized and disposed of properly. Settled solids in the tank may be placed into the "high VOC" soil stockpile.

2.4.5 Monitoring Procedures and Control Methods

Excavation Controls

Equipment and personnel will be restricted from entering the existing excavations during the removal of vegetative matter and backfilling. An excavation stability analysis has been completed which indicates that equipment (to remove vegetative matter and to backfill the existing excavations) maintain a distance of at least 8 feet from the edge of the excavation while the side slopes are unsupported. The excavation stability analyses are presented in Appendix A. The RAC's Professional Engineer will be required to confirm this analysis, perform appropriate inspections, and appropriately protect workers. This indicates that the work will need to be completed in stages using controlled backfilling techniques. If the RAC determines that equipment and personnel are required to enter the excavation, according to the Code of Federal Regulations concerning labor, Part 1926, Regulation 1926.652, Requirement for Protection

Systems, any excavation that extends deeper than 5 feet below the ground surface, and are not made entirely in stable rock, require a protection system, engineered slope cutbacks, or structural supports to resist potential cave-in.

All determinations of required side slopes or necessary excavation support for all additional excavations or soil removal activities (i.e., other than existing excavations) will be made by the RAC's Professional Engineer to ensure excavation stability. The RAC's Professional Engineer will also determine limits to which personnel and equipment may approach an open excavation. A 2:1 slope will be used as a guideline for determining the minimum distance from the excavation. Temporary fencing shall be constructed to prevent non-workers from approaching the excavation if the excavation is left open when workers are not present (i.e., overnight, weekends, etc.).

Additional excavations will be completed for the construction of the SVE system components, including, but not limited to, pipe trenches and control box excavations. The stability of and supports required for these excavations will be provided by the RAC, as discussed above. No excavation supports are expected to be required for the shallow (2-foot) PCB impacted soil excavations.

Dust Suppression Methods

Fugitive dust emissions that may be generated during remedial activities will be controlled to the extent necessary to comply with PADEP air quality regulations (including Chapter 123). Dust suppression methods include, but are not limited to, water sprays, foams, and/or physical covers.

Vapor Monitoring and Control Methods

Monitoring of organic vapors in the worker breathing zone and in ambient air downwind of the work area will be conducted. Action levels for upgrading personal protective equipment (PPE) or implementing engineering controls shall be determined by the RAC and set in the RAC's HASP consistent with assuring health and safety of excavation workers and potential on-site and off-site receptors. The RAC's HASP will be required to meet the minimum requirements of the HASP presented in Appendix E.

Control of odors and VOC emissions is a critical aspect of soil excavation. The limited excavation included in the SVE alternative remedy should minimize these potential emissions.

The RAC will be responsible for the proper and timely implementation of VOC and odor control measures. The RAC shall minimize the extent and duration of excavation to minimize the potential of releasing VOCs and odors that could potentially affect off-site residents. Specific methods for managing odors and VOCs are addressed in the HASP presented in Appendix E.

Decontamination Procedures

In accordance with the HASP, a decontamination zone will be established between clean and contaminated zones. All workers and equipment leaving the contaminated zone will be required to go through decontamination steps prior to entering the clean zone, as described in the Decontamination Plan (see Section 6.2). Wastewater generated during decontamination activities shall be properly managed.

2.4.6 Health and Safety Procedures

The RAC shall develop a detailed HASP prior to the commencement of work. Minimum Technical Specifications for decontamination and health and safety are presented in Appendix F this Report. The RAC's HASP will, at a minimum, include the elements of the HASP presented as part of this remedial design and be in accordance with OSHA standards set forth at 29 CFR Parts 1910, 1926, and 1904. The RAC's HASP will be submitted to the Agencies for review and acceptance prior to commencement of work. The RAC's HASP must address all aspects of the proposed work and meet the minimum requirements presented in this remedial design. All excavation activities shall be conducted so as not to create unacceptable risks to human health and safety. Further details regarding the HASP are included in Section 6.1.

2.4.7 Characterization and Disposal of Remediation Wastes

Characterizing and disposing of remediation waste shall be completed following the removal and staging of remediation waste (stockpiled solids and containerized liquids) as detailed in Section 2.4.4 and then arranging off-site transportation and disposal site acceptance. Sampling procedures for this approach is included in the SAP.

Depending on the concentrations of VOCs, PCBs, and other contaminants in the excavated soil, the soil may be disposed at a RCRA Subtitle D (Non-hazardous) Waste Landfill, a RCRA Subtitle C (Hazardous) Waste Landfill, or a PCB Disposal Facility (i.e., TSCA Facility) approved under 40 CFR 761.75. Soil will require pretreatment if any UTS is exceeded by 10 times.

In order for soil to be considered a hazardous waste, it must have the characteristics of a hazardous waste, which include ignitability, corrosivity, reactivity, and toxicity or be derived from a listed hazardous waste. In this instance no evidence of the presence of listed hazardous wastes is known to exist. Toxicity characteristics are determined by identifying if the soil has one or more toxic contaminants above the regulatory levels (see Table 2-2). This is achieved by using the TCLP test method with direct comparison of the results to the regulatory levels. In accordance with USEPA Guidance Document, as a conservative pre-screening tool, the solid waste test methods, such as USEPA SW846 Method 8260B for VOCs, can be used by comparing 1/20 of the results to the TCLP regulatory limits.

Soil to be shipped off-site is determined to be hazardous if it meets the characteristics of a hazardous waste, as described above. As allowed under the Land Disposal Restriction (LDR) Rule for remediation wastes, if soil exceeds ten times the UTS limits, then pretreatment to below ten times the UTS limits or a reduction of 90% is required prior to disposal at a RCRA Subtitle C Hazardous Waste Landfill. If the soil does not exceed ten times the UTS limits, then pretreatment is not required prior to disposal at RCRA Subtitle C Hazardous Waste Landfill. If the soil is not determined to be hazardous, additional testing will be done to determine the PCB content. If PCBs are higher than 50 ppm, the soil is required to be disposed of at a RCRA Subtitle C Hazardous Waste Landfill or regulated PCB disposal facility. Additionally, as discussed in Section 2.2, soil concentrations must be below health based standards prior to going to a RCRA Subtitle D (non-hazardous) landfill.

The Agencies will be notified by CSDG as to the estimated amount of material sent to RCRA treatment/disposal facilities prior to shipment off-site. All haulers will be licensed to ship hazardous waste. Trucks will be properly labeled and all hazardous materials will be manifested.

2.5 SVE System Design

2.5.1 SVE Well Layout

The SVE well layout consists of two types of SVE wells of similar construction: shallow/intermediate SVE wells and deep SVE wells (see Section 2.3.3). Based on the proposed well spacing of 35 feet (17.5 ft radius), a layout of 28 shallow/intermediate wells was presented in the responses to USEPA comments on the FFS (Golder Associates, September 13, 2002) to extend vacuum coverage over the extent of the VOC-impacted soils within the upper clay and interbedded zone.

The number of pore volumes required for cleanup is dependent on contaminant type and/or soil concentrations with greater concentrations requiring larger numbers of pore volumes to complete remediation. The VOC concentrations measured at shallow/intermediate depths of the northernmost section of the MA, and at the northern FDA excavation, are more than an order of magnitude greater than at other locations. For this reason, four additional shallow/intermediate wells have been added to reduce the operating ROI and increase the number of pore volumes removed per year in these locations. The additional wells can also act as passive air inlet wells to improve air flow in this area, if necessary.

Therefore, a total SVE well network of 50 wells is proposed for the FDA/MA, which consist of 35 shallow/intermediate zone SVE wells (including three existing from the pilot study), and 15 deep zone SVE wells (including two existing from the pilot study). Existing pilot study wells not utilized in the SVE system will be decommissioned. The well layout has been divided into five separate SVE remediation areas defined as having similar soil VOC concentrations and/or historical use, as shown on Figures 2-8 and 2-9.

- Area A – MA North;
- Area B – MA Central;
- Area C – FDA North;
- Area D – MA South; and,
- Area E – FDA South.

The extracted vapor from the SVE wells within each remediation area will have individual controls at the Wellhead Control Building and be conveyed in a dedicated pipe. Where possible, the individual lateral pipelines will be installed in a common trench to minimize trenching. Piping will be marked and/or colored to facilitate identification. Spare 2-inch pipes will be placed in common trenches in case of damage to a pipeline or if additional wells need to be added.

Figure 2-8 shows the network of the 35 shallow/intermediate SVE wells. These wells cover the delineated area of impacted soils, and are designed to remove VOCs from between about 10 ft to 30 ft bgs. Additional wells may be installed if the pre-construction soil sampling reveals additional VOC impacts in the northern portion of the MA or in the northern or southern portions

of the FDA. The results of pre-construction soil sampling and proposed additional wells, if required, will be submitted to the Agency for approval.

Figure 2-9 shows the network of the 15 deep zone SVE wells. These wells will be installed only were VOC contamination was detected relatively deep (below 30 ft bgs), as shown on the figure.

Figure 2-10 shows the network of both shallow/intermediate and deep wells and the common pipe trench layout. Figure 2-11 shows the piping arrangement in the SVE piping trenches.

Well locations were adjusted as necessary to maximize the pore volume removal rate from more impacted areas and minimize the extraction of soil vapor from outside of the VOC impacted areas. In addition, specific well screen depths and lengths were determined based on detailed review of VOC concentrations and stratigraphy determined during the PDI. The shallow/intermediate well screen (20 to 30-foot screen length) will be located from within the upper clay layer (5 to 10 ft bgs) to the approximate base of the interbedded zone. The deep well screen (20-foot screen approximate) would be located below the interbedded zone into the lower clay. Table 2-3 presents the depth and screen interval for each SVE well.

Layout Verification

As discussed in Section 2.3, verification of the lateral and vertical extent of VOC impacts is required in the northern portion of the MA, the northern portion of the FDA, and the southern portion of the FDA. As shown on Figure 2-8, soil borings for wells to be installed near the edge of and interior to the inferred VOC delineation will be soil sampled and analyzed for VOCs to determine if SVE wells are needed at those locations.

For SVE wells to be sampled, boreholes will be constructed using standard drilling methods as described in Appendix F. For shallow SVE borings utilized to verify the lateral delineation (locationsA-2S, A-3S, A-4S, E-3S, and E-4S), 2-foot split-spoon samples will be collected at 5-foot intervals beginning at 5 ft bgs. The split-spoon samples will be field screened utilizing a flame ionization detector (FID) and a laboratory sample will be collected from the 6-inch portion having the highest FID reading from each split spoon. The boring will be extended to a depth of 30 feet, or to a depth where total VOC field readings are less than 10 ppm[7], whichever is deeper.

[7] This concentration was determined during the PDI as indicative of VOC concentrations (measured in the laboratory samples) being less than the ROD SCS, as summarized in Appendix A.

Three samples from each boring, two having the highest field screen VOC concentrations and one at the base will be selected for laboratory analyses of VOCs.

The need for further lateral verification will depend on the magnitude of the ROD SCS exceedance and potential physical features limiting the potential area of impact. The locations of boreholes to verify VOC impacts are consistent with the proposed spacing of the SVE well layout. Detailed procedures for the verification sampling program are presented in the SAP.

The exceptions to this approach are for boreholes to be placed next to shallow SVE wells (C-1S, C-3S, C-7S, C-9S, and C-11S) located in the central portion of the existing excavations in the FDA, which will be used to verify the vertical delineation. These boreholes will have split spoon samples collected at 5-foot intervals below 30 feet bgs to the bedrock surface or the water table, whichever is shallower. This is expected to be at a depth of approximately 60 feet bgs. Two samples from these borings, one containing the highest field screen VOC concentration and one sample at the base of the boring, will be selected for laboratory analysis of VOCs.

An SVE well will be installed in each of the borings with the screen intervals based on the field screening results. Should the laboratory results be less than the ROD SCS, then the SVE well will not be connected to the soil vapor collection system. If the laboratory results are greater than the ROD SCS, then the SVE well will be connected to the collection system.

The determination to install additional wells or modify screening intervals of proposed wells will involve Agency input/approval. Sample results from sampling to delineate the vertical and lateral extent of VOC contamination will be summarized and presented by the Owner's Representative or Remedial Designer to USEPA and PADEP. A proposal for the installation of additional wells or modifications in well construction based on these sampling results will also be provided with this submittal. Because this submittal will be produced when construction is ongoing, discussions and an agreement on the proposal will need to be done in a timely manner.

2.5.2 SVE Well Construction

Four-inch diameter SVE wells will be installed within 10-inch diameter boreholes and constructed using hollow-stem auger (HSA) drilling or air rotary methods in the FDA and MA. A typical SVE well is shown on Figure 2-11. Each SVE well (shallow/intermediate or deep) will be constructed in a similar manner except that the depth of the well and length of well screen will

vary based on Site conditions. The new SVE wells will consist of 4-inch diameter PVC casing and slotted well screen (0.010 inch). The well screen will be surrounded by a Morie #1 Sand filter pack with a 1-footlayer of Morie #1 sand on top of the filter pack. The open interval of the well will be sealed with a 1-foot bentonite chip layer, and a 3-foot cement/bentonite grout layer will be installed up to the base of the lateral pipe T-connection. Low permeability fill, which will provide adequate drainage, will be added to the remaining annular space. The well will be completed at the surface within a flush mount box anchored in concrete, sloped to drain stormwater away from the box. All drill cuttings from installation of SVE wells will be placed in the "high VOC" soil stockpile (see Section 2.4.4).

PVC is commonly used as SVE well screen and casing material. Standard PVC well screens are factory fabricated in 5-foot lengths and can be easily flush threaded together to provide varying lengths of screen, as required. While PVC may swell and soften when contacting strong solutions of chlorinated solvents such as trichloroethylene or tetrachloroethylene, PVC has been used successfully at many remedial action sites when handling dilute concentrations (i.e. ppm levels) of chlorinated compounds.

Existing SVE wells and monitoring points from the pilot study that will be used for SVE wells in the remedy will not be reconstructed to adjust the depth, diameter, or screen interval. The upper portion of those wells/monitoring points will be modified to tie in with the SVE piping system.

2.5.3 SVE Collection System Piping

Figure 2-10 present the layout of the SVE collection system piping. The piping system has been designed to route each SVE well lateral to the Wellhead Control Building and then onwards to the SVE Blower Building. Each SVE well will have a pressure (vacuum) gauge, sampling port, flow port, and valve on its respective lateral within the Wellhead Control Building. The SVE well lateral pipes from each remediation area will manifold together into a common header pipe for each remediation area. Each remediation area will have a pressure (vacuum) gauge, sampling port, flow port, and valve on its respective common header pipe in the Wellhead Control Building. The five common header pipes will tie in together at a manifold underground, away from the Wellhead Control Building, into a single common header pipe for all remediation areas, which will convey the extracted vapor from the SVE wells within each remediation area towards treatment at the SVE Blower Building. Details of the Wellhead Control Building are shown on Figures 2-18 through 2-20.

Most piping in the FDA and MA will be located below ground. Pipe used within the Wellhead Control Building or aboveground locations will be PVC. High-density polyethylene (HDPE) will be used for all underground pipe. Flange connections will be provided between PVC and HDPE pipe. Locating piping below ground provides freeze protection and temperature control, will avoid the potential operational problems of expansion/contraction, will eliminate the need to heat trace an aboveground piping system, and will minimize potential vandalism. The width of the trenches for the piping will be kept to a minimum and will vary depending on the number of laterals/headers installed within a trench. The soil removed from the trench will be placed back into the trench as backfill. Spare 2-inch lateral pipes will be installed in each trench from the beginning of the trench to the Wellhead Control Building, where the spare headers will be capped. Figure 2-11 shows trench cross-sections. The piping will be located a minimum of 3 feet below grade. Where possible, SVE well laterals and header piping shall run side by side in the same trench, as shown on the SVE well layouts presented on Figure2-10.

The underground SVE well laterals and header piping runs will be constructed of SDR11, HDPE piping because HDPE pipe is generally flexible and unlikely to crack and/or develop leaks during operation of the SVE system. A pipe diameter of 2 inches has been selected for the SVE well pipe laterals to minimize pressure losses so that a minimum of 12 inches Hg can be maintained at each well head conservatively assuming a maximum flow of 30 scfm per well. The exception to this is the portion of piping in the Wellhead Control Building which will be 1-inch PVC. See Appendix A-6 for pipe sizing calculations. The SVE well lateral piping and header between each well and the Wellhead Control Building will be sloped at a minimum of 1% either towards the well to allow condensate to flow back into the well from which it was extracted or towards the Wellhead Control Building to allow condensate to be removed at the low point in piping, where the wellhead pipes extend vertically into the wellhead control building, a condensate pool allows for removal of this liquid from the low point using a portable pump. The condensate that collects in the SVE piping between the Wellhead Control Building and the SVE Blower Building will be sloped towards the blower building and pulled into the air/water separator by the vacuum of the blower. The common header pipe running from the Wellhead Control Building to the Blower Building will be constructed of HDPE piping. A pipe diameter of 10 inches has been selected for the common header pipe to minimize pressure losses. The blower system will be located to the west of the FDA/MA.

In addition to depth and screen length, Table 2-3 presents additional details regarding the SVE well layout, including contamination within the well's ROI, survey location, and current and final surface elevations. Table 2-4 presents piping slopes and depths that need to be maintained for condensate drainage and freeze protection.

2.5.4 SVE Blower System

HDPE header piping from each of the remediation area will be combined underground into a 10-inch common pipe to the blower building located to the west of the FDA/MA as shown on Figure 2-10. This building will house the blower and related equipment, components, and controls. The blower system process and instrumentation diagrams are depicted on Figures 2-13 through 2-15. The 10-inch HDPE common header will have a flange connection to the outdoor air/water separator to remove entrained water from the vapor. The air/water separator will be equipped with high-level switches. A 10-inch Schedule 40 galvanized steel will connect the air / moisture separator unit with the Blower Building since HDPE pipe cannot withstand the elevated blower discharge temperatures and vibrations.

Upon entering the Blower Building, a flow port, pressure indicating transmitter, ambient air inlet valve for maintaining blower vacuums, and an air filter will be installed. The combined ambient air/SVE vapor stream will then be divided to flow through two blowers in parallel. Each of the two blower branches has an inlet silencer, outlet silencer, and upstream and downstream isolation valves. After the outlet silencer the streams combine to one outlet to a heat exchanger and the vapor phase carbon treatment system. The heat exchanger is being used to reduce the temperature of the vapor stream after the blowers, which should make removal of VOCs by the carbon units more efficient. A temperature indicator, pressure indicating transmitter, total hydrocarbon analyzer sample line, and flow indicating transmitter will be installed at the combined blower outlet. The piping will then exit the building to a three unit vapor-phase activated carbon system. Two carbon units will be connected in series with the third unit as a spare. Before the first, between the first and second carbon units, and after the second carbon unit will be pressure indicators, sample ports, and lines to the total hydrocarbon analyzer for continuous monitoring of organic vapors. The effluent from the second carbon unit will exit through a stack before being discharged to the ambient air. The third carbon unit will be after the second carbon unit but before the sample ports and other controls, such that the third unit can be put in service and monitored, if needed.

As mentioned above, piping located near the blowers (i.e., from entrance of the building to the blower) and on the blower discharge to the activated carbon units will be constructed of Schedule 40 galvanized steel pipe since HDPE pipe cannot withstand the elevated blower discharge temperatures and vibrations. The blower effluent piping will be cased for burn protection. Provisions will be made for a future condensate collection tank if condensate generation rates are higher than expected, including leaving adequate room for the tank and transfer pump, and locations for automatic pump controls in the air/water separator. It is recognized that a permanent storage tank may need to be registered with PADEP.

The building will be insulated and sound proofing installed to minimize noise from the blower. The East Whiteland Township ordinances were reviewed for noise limits. The ordinance requires noise levels be maintained at the property line. The nearest development is the Hill Brook Circle. The undeveloped property between the proposed location of the Blower Building is owned by Balderston. Therefore, the property line for purposes of meeting the noise ordinance is considered the property line of the nearest Hill Brook Circle property.

Minimal heat will be required due to the heat produced by the operation of the blowers. Building heat and/or heat tracing will be provided only to the extent needed to prevent freeze problems should both blowers go down. Ventilation will be necessary.

The use of two blowers in parallel will allow increased flexibility in operations, improve efficiency, and reduce downtime for the remediation of areas requiring the greatest cleanup time should one of the blowers require service and/or repairs.

Several devices will be used to monitor the blower system, alert off-site personnel of an alarm condition, and shut down the blower system if necessary. These devices include:

- Flow indicating transmitter: located on the discharge side of the blower, before the carbon units. The flow indicating transmitter will display the total SVE system flow rate (including dilution air) and transmit to a data recorder;
- Suction-side vacuum indicating transmitter: located on the suction side of the blower, before the dilution air inlet. The vacuum indicating transmitter will display the vacuum and transmit to a data recorder. If the vacuum reaches adjustable low and high setpoint, an alarm light will be displayed inside the building. The alarm will also be dialed out to O&M personnel, and the blowers will be shut down;

- Pressure-side pressure indicating transmitter: located on the pressure side of the blower. The pressure indicating transmitter will display the pressure and transmit to a data recorder. If the pressure reaches an adjustable high setpoint, an alarm light will be displayed inside the building. The alarm will also be dialed out to O&M personnel, and the blowers will be shut down;

- Total Hydrocarbon Analyzer Channel #1: located after the blowers and before the carbon treatment units. The total hydrocarbon analyzer will periodically (approximately once every hour or less) display and transmit to a data recorder the total VOCs in the vapor stream. Channel #1 will be equipped with a high VOC concentration alarm which will shut down the blowers should concentrations approach 5.0% of the LEL;

- Total Hydrocarbon Analyzer Channel #2: located between the first carbon unit and the secondary carbon unit. The total hydrocarbon analyzer will periodically (approximately once every hour or less) display and transmit to a data recorder the total VOCs in the vapor stream. If the VOC concentration reaches an adjustable high setpoint, an alarm light will be displayed inside the building and the alarm will be dialed out to O&M personnel;

- Total Hydrocarbon Analyzer Channel #3: located after the second and third carbon unit before discharge to the stock. The total hydrocarbon analyzer will periodically (approximately once every hour or less) display and transmit to a data recorder the total VOCs in the vapor stream. If the VOC concentration reaches an adjustable high setpoint, an alarm light will be displayed inside the building. The alarm will also be dialed out to O&M personnel and the blowers will be shut down;

- Air/water separator high level: The high level alarm will indicate a need for accumulated condensate to be removed and transported off-site. If the high level switch is activated, an alarm light will be displayed inside the building and the alarm will be dialed out to O&M personnel; and,

- Air/water separator level high-high: A high-high level alarm will be located in the air/water separator. If the high-high level switch is activated, an alarm light will be displayed inside the building, the alarm will be dialed out to O&M personnel and the blowers will be shut down.

A detail of the control panel is shown on Figure 2-16 and a single-line electrical diagram is shown on Figure 2-17. Note that the power requirements were conservatively estimated so that properly sized electrical service would be provided.

2.5.5 SVE Treatment System

Vapor phase carbon absorption has been selected for the treatment of the SVE system off-gas. Advantages to using vapor phase carbon include:

- It will remove many types of organic compounds including the halogenated hydrocarbons of concern at the FDA/MA;

- Typical VOC removal efficiencies range between 90-98% and removal efficiencies of 95-98% are common;
- It is not adversely affected by cyclic processes (i.e., pulsed operation, see Section 2.7.2) or changing VOC concentrations; and,
- It has straightforward operation requirements.

One disadvantage to vapor phase carbon is that it becomes less efficient with high relative humidity and temperature. The optimum sorption conditions occur when the air flowing through the carbon has a relative humidity of 40% at 27°C at a pressure near atmospheric (USACE, 2002). The design of the SVE system will control humidity conditions by using an air/water separator to remove entrained moisture and temperature by installation of a blower exhaust cooler (air-to-air heat exchanger).

The vapor phase carbon units will be appropriately sized by the equipment vendor during construction for the anticipated steady-state VOC concentrations and pneumatic head loss. While VOC concentrations will be highest during start-up and the initial operation of the system, the carbon units will be sized for the lower steady-state VOC concentrations as this has been proven to be the most efficient operation. In order to accommodate the higher initial concentrations of VOCs, consideration will be given to starting the system in stages (i.e., by remediation area) to reduce the initial VOC mass extraction rates. In addition, the temporary use of larger units, and/or more frequent carbon changeouts of the smaller steady-state sized units will also be considered. The carbon units will be sized appropriately to assure the effective treatment of VOCs in the vapor stream and compliance with PADEP permit requirements. When the PADEP permit equivalency is issued, sampling requirements and discharge limits for the VOCs in the vapor stream will be in compliance with this permit equivalency. Design requirements of the vapor phase carbon VOC treatment system are presented in the Technical Specifications.

As shown on Figure 2-16, these vapor phase treatment units will be utilized in series. VOC concentrations will be measured on a regular basis between the first and second and after the second unit using a total hydrocarbon analyzer. This data will be supplemented with field samples for laboratory data analyses. The reported VOC concentration data will be used to manage the appropriate timing of carbon changeouts and will provide alarms and system shut-down should excessive VOC breakthrough after first and second unit be observed, respectively.

During the later stages of operation, influent VOC levels are expected to be dramatically reduced compared to initial levels. The vapor treatment systems will be operated in compliance with the air permit equivalency limits and requirements and that, to the extent allowed by the permit equivalency, the level of treatment may be reduced at some point in the future when only minor amounts of VOC are being extracted. Similarly, operation of the Total Hydrocarbon Analyzer may be considered when concentrations are not considered a health hazard.

2.5.6 Condensate Management

Estimates of condensate generation are presented in Appendix A. Condensate will be collected within the air/water separator located inside the blower building. Condensate that collects in the SVE piping between the SVE wells and the wellhead control building will be collected at a low point in the SVE well piping located at the bottom of the vertical pipe entering the wellhead control building. A cleanout port will allow removal of this condensate using a portable pump. The condensate that collects in the SVE piping between the wellhead control building and blower building will be sloped towards the blower building and pulled into the air/water separator by the vacuum of the blower. Samples of the condensate will be taken and analyzed, if available, to determine proper disposal of the condensate. The air/water separator will be equipped with two level alarms. The first alarm (high level) will signal an alarm in the blower building, and automatically dial out the alarm to O&M personnel to notify of required condensate removal. The second alarm (high-high level) will signal an alarm in the blower building, automatically dial out the alarm to O&M personnel, and shut down the blower system until the condensate is removed and the system restarted. Provisions will be made to allow for a separate, larger condensate tank if the condensate generation rate is difficult to manage with the air/water separator.

Emptying the air/water separator of condensate will not produce off-gas emissions because it is part of a closed system and under vacuum. Containers, such as drums, used to store condensate will be sealed after filling. If it is determined in the future that a separate condensate tank is needed, provisions to prevent release of off-gases during use will be implemented.

2.6 Operation and Maintenance (O&M)

Routine operation and maintenance (O&M) of the SVE system are necessary to evaluate whether mechanical components are operating within manufacturer's tolerances, to maintain the mechanical components in working order, and to track the overall performance of the SVE

system operation. Operational monitoring data, maintenance activities and system adjustments will be recorded in a dedicated logbook kept in the blower building. Operational monitoring will enable system adjustments to enhance SVE performance and allow preliminary evaluations of performance relative to the shutdown criteria discussed in Section 2.7. These data will also be used to guide the scheduling of formal performance evaluations via speciated laboratory analyses. The type of operational monitoring to be performed and a monitoring schedule is presented in Table 2-5.

Specific O&M procedures of the SVE system will be defined in the O&M Plan, as discussed in Section 6.6. O&M requirements have been developed in this Report. Final O&M procedures and requirements will be defined following remedial action construction utilizing as-built drawings, refined procedures dictated by the final construction, initial SVE system operations, and specific equipment maintenance procedures included in equipment O&M manuals provided by the SVE system RAC.

2.7 SVE System Shut-Down Strategy

As stated in the ROD, the overall objective for the remediation of FDA/MA soils is to provide protection of groundwater. Given this objective, the SVE system will be operated until the limitations of the technology are reached, i.e., when VOC concentrations in recovered vapors have asymptotically leveled off (VOC removal becomes diffusion limited) and only minimal amounts of additional mass can be removed with diminishing returns relative to achieving the overall groundwater protection objective. Upon reaching this endpoint, a post-operational monitoring program will be implemented to verify that any remaining VOCs in subsurface soil, which cannot be effectively recovered by SVE, will not leach from the soil and adversely impact groundwater downgradient of the FDA/MA or the MNA remedy. It is recognized that, to the extent necessary, institutional controls for both VOC and PCB impacted soil in the FDA/MA may be considered. See Section 2.3.1 for further details.

The following discusses the operation and monitoring procedures that will be followed to complete the remediation of VOCs in FDA/MA soils and to determine when it is appropriate to permanently terminate the operation of the SVE system. A decision tree for this Shutdown Strategy is shown on Figure 2-21.

2.7.1 Steady State Operation

Once steady-state conditions have been reached, the rate of monitoring and sampling will be reduced to the extent necessary to continue operations and verify progress, as initially projected in Table 2-5. The SVE system will continue to be balanced during steady-state operations, focusing its extraction energy on areas that exhibit higher concentrations of VOCs. The monitoring type and frequency may be increased (or decreased) if additional data (or less data) is required for assessment of steady state operation, or for troubleshooting purposes. As data is collected, it will be analyzed for trends to assess performance and progress towards the remedial action goal. While many of the items to be monitored are important for tracking the overall operation of the system (e.g., vacuum, flow, condensate generation, etc.), the primary information that will be used to assess performance and thus guide the Shutdown Strategy is the monitoring for VOCs in the soil vapor.

2.7.2 Pulse Operation

After the SVE system has reached steady-state conditions, decreasing trends of VOC concentrations in soil vapor will be realized in each well or in each remediation area. When VOC concentrations reach asymptotic conditions, the operation of a SVE well (or remediation area) will be changed from steady state to pulse operation. During pulse operation, vapor extraction from the well will be stopped for a short period (one to multiple weeks depending on well conditions) to allow VOCs to diffuse from the soil mass into the soil vapor (i.e., rebound). During that dormant period, VOC concentrations may be monitored using a FID at the wellhead to assess the degree and rate of VOC rebound in soil vapor. If the FID readings in the soil vapor quickly increase to appreciable levels over the dormant period (e.g., approximately 25% of the initial baseline FID reading at a well), vapor extraction from the well will be restarted, operated, and monitored until the well once again reaches asymptotic conditions. If deemed necessary, adjustments to the flow/vacuum of individual wells may be made to focus extraction energy and improve VOC removal performance.

As shown on Figure 2-21, pulse operation may be repeated at a given well depending on the magnitude and time of VOC rebound in the soil vapor. It is anticipated that the initial pulse operation will consist of a trial period of two weeks on followed by two weeks off to obtain data regarding the benefit of operating in a pulsed manner. Prior to an extended period of pulse operation, a Work Plan will be developed and submitted to the Agencies. The duration and type

of pulse operation will likely vary between wells depending on well-specific conditions. Pulse operation will be continued until VOC concentrations reach final asymptotic levels and the data indicate that little additional VOC mass can be removed (i.e., the limit of technology is reached). At this point, the well will be shut down and assessed further in accordance with the Shut Down Verification Program presented on Figure 2-21. Ultimately, after all wells in a given remediation area or the entire Site have been operated to the practical limit of the technology, the Shut Down Verification Program depicted on Figure 2-21 will be implemented as discussed below.

This short-term shutdown and restart operation is referred to as pulse operation. Notably, each SVE well will be pulsed at least once. If pulse operation results in repeated rebounding of appreciable VOC mass removal, despite adjustments to the well operation, then contingent measures, including, but not limited to, the installation of additional wells and/or passive ambient air recharge at adjacent wells, will be evaluated, discussed with the Agencies, and possibly implemented. These alternative performance enhancement procedures are presented in the Operation and Maintenance Plan.

2.7.3 Shut-Down Verification Program

The objective of the SVE system Shut-Down Verification Program is to confirm that the SVE system has successfully reduced VOC concentrations such that the remaining VOCs in FDA/MA subsurface soil do not pose an adverse threat to groundwater downgradient of the FDA/MA. This verification will be accomplished through the collection and analysis of subsurface soil samples for analysis for the compounds of concern listed in the SAMP (i.e., methylene chloride, vinyl chloride, PCE, TCE, 1,1-DCE, 1,1-DCA, and 1,1,1-TCA) and an evaluation of whether the remaining COCs in subsurface soil could adversely impact groundwater.

The system will be operated in accordance with procedures outlined in Sections 2.71 and 2.72. Once the operation is completed, the Shut-Down Verification Program will be implemented. Several stages of verification and different types of data will be considered to determine whether the groundwater protection objective has been achieved. Should the data indicate that success has not been achieved, then additional steps will be taken as described below.

Once operation is completed in a remediation area or site-wide, five Geoprobe borings will be advanced and subsurface soil samples collected and analyzed for VOCs. One boring will be advanced in each remediation area where zones of higher VOC impacts have been detected

(worst-case), as determined by data collected during the PDI and/or by data gathered during the operation of the SVE system. Three samples will be collected from each boring based on field screening using a FID (i.e., the samples having the highest, mid-range and lowest FID readings). The proposed location for each boring will be determined and submitted to the Agencies for approval prior to implementing the verification program. The above approach will result in the collection of three subsurface soil samples in each of the five remediation areas for a total of 15 subsurface soil samples. Each sample will be collected, analyzed and validated for VOCs in accordance with the procedures specified in the Remedial Action Sampling and Analysis Plan. The sample results from each remediation area (and also site-wide) will be arithmetically averaged to provide a representation of the "worst case" residual VOC concentrations throughout the soil column in each remediation area (and site-wide).

The results from the subsurface soil sample analyses will be evaluated to determine whether the above "worst case" scenario of remaining VOCs in subsurface soil, which are above the SCSs established for excavation, poses an adverse threat to groundwater. If an adverse threat is not indicated, then remediation is considered complete (for each remediation area or site-wide). Should this conservative estimate of remaining VOCs indicate a threat to groundwater, then other more site-specific data evaluation approaches, including, but not limited to, the collection of additional randomly-located samples and/or data averaging approaches that may consider depth of contamination, will be considered to provide a more realistic estimate of potential groundwater impacts. Since these evaluations will not be conducted for possibly several years in the future, the specific data evaluation methods are not specified at this time. If it is necessary, an updated verification sampling approach, based on the operational data collected during the SVE system and the use of up-to-date groundwater impact estimating methods, will be proposed to USEPA and PADEP for approval prior to implementation.

3.0 FDA/MA GROUNDWATER REMEDY DESIGN

3.1 Project Description / Design Objectives

The ROD specifies monitored natural attenuation for the remediation of groundwater at the FDA/MA portion of the site. This remedy is consistent with information presented in the PDI, which demonstrates generally decreasing VOC concentration trends. The PDI also identified/confirmed a shift in the predominant groundwater flow direction from the south/southeast flow observed during the RI to the north/northeast flow observed during the PDI. As a result, groundwater from the FDA/MA no longer flows in the direction of Hillbrook Circle and/or Valley Creek but now exhibits flow in the direction of the MPA. In addition, in 2001, the Hillbrook Circle residential development and residents on Phoenixville Pike and Conestoga Road were connected to the public water supply system. As a result, there are no longer any groundwater receptors in the vicinity of the FDA/MA requiring additional monitoring as part of the MNA design. Further, Valley Creek has been identified as a losing stream in the area providing additional assurances that it does not represent a potential receptor for groundwater in the area of the FDA/MA.

The primary objective for the design of the MNA remedy is to develop monitoring and data analyses procedures that will be used to assess the reduction of VOCs in groundwater downgradient from the FDA/MA. Specific goals to meet this objective include:

- Assessment of decreasing concentrations and mass reduction; and,
- Assessment of geochemical conditions indicative of natural attenuation.

In addition to the above objective, due to the change in predominant groundwater flow direction, there is an additional design objective that was not envisioned by the ROD remedy. This additional design objective is to provide continued verification of the groundwater flow direction. It is important to note that the change in predominant groundwater flow direction may be a relatively recent trend and, as such, groundwater quality northeast of the FDA/MA might still be equilibrating (i.e., microbial populations adjusting to changing geochemical conditions and the leveling of dispersion and dilution effects). Therefore, temporal and spatial variability in groundwater quality is expected northeast of the FDA/MA until hydrogeologic, biologic, and geochemical conditions equilibrate assuming that groundwater flow direction is a relatively recent occurrence.

3.2 Design Criteria

This section describes the criteria that will be utilized for the design of the MNA remedy and, as such, fulfills the Design Criteria Report requirements of the Consent Decree.

3.2.1 ROD Requirements

The following presents the Performance Standards for the FDA/MA groundwater remedy listed in Section X, Part E of the ROD, along with clarifications of those Performance Standards based on new information obtained following the issuance of the ROD.

Performance Standard X.E.1

A natural attenuation groundwater monitoring program shall be implemented to determine that natural attenuation is occurring, and that the groundwater plume will not enlarge or migrate into areas not presently affected by the source area at the Former Disposal Area/Mounded Area. Monitoring shall be conducted until the MCL or the non- zero MCLG for all the contaminants of concern [40 C.F .R. part 141] whichever is more stringent is achieved. Since most COPCs at the Site are members of the same general class of chemicals and possess similar physical and chemical properties, the selected remedy at the Site will likely reduce or eliminate all contaminants posing potential risks.

The performance standards for the contaminants in the groundwater are listed below:

Contaminant	*MCL (ug/L)*	*MCLG (ug/L)*
Chloroform	*100.0*	*0*
Trichloroethene (TCE)	*5.0*	*0*
1,1- Dichloroethene (1,1-DCE)	*7.0*	*0*
1,2-Dicholoethane (1,2-DCE)	*5.0*	*0*
Tetrachloroethene (PCE)	5.0	0

Clarification to Performance Standard X.E.1

Refer to Clarification of Performance Standard X.E.2 below.

Performance Standard X.E.2

The Natural Attenuation program shall include sampling to monitor the effectiveness of the Natural Attenuation program. Monitoring shall include sampling of the groundwater discharge into Valley Creek and surface water within Valley Creek to ensure that the groundwater plume

does not impact the creek. The necessary monitoring shall be determined during Remedial Design and shall be provided in a Natural Attenuation Monitoring Plan. USEPA, in consultation with PADEP, will determine the number and location of monitoring wells, number and location of creek samples and monitoring parameters necessary to verify the performance of the remedial action. Installation of additional wells may be necessary and must be in accordance with 25 Pa. Code Chapter 107. These regulations are established pursuant to the Water Well Drillers License Act, 32 P.S.§ 645.1 .et seq.

Clarification of Performance Standard X.E.2

As discussed above in Section 3.1, given the potentially recent change in groundwater flow direction, groundwater quality in the vicinity of the FDA/MA may still be equilibrating. As a result, temporal and spatial variability in VOC concentrations northeast of the FDA/MA over the short term may be observed. This potential variability will need to be considered in the design and analysis of the MNA program and the overall evaluation of MNA performance.

Valley Creek is located to the southeast, and based on recent monitoring data is not in a downgradient flow path from the FDA/MA. As confirmation, the elevation of Valley Creek as it passes to the south of Hillbrook Circle is between 320 and 350 feet above MSL, based on the topographic contours shown on the USGS quadrangle map. This elevation is substantially higher than the groundwater elevations in the area, including the FDA/MA (which range from 265 to 300 feet above MSL) suggesting that Valley Creek is a losing stream, or discharges to the groundwater this area. However, to verify this, the stream bed elevation of Valley Creek from the point where the creek crosses Route 401 (south of Hillbrook Circle) to the point where the creek crosses Phoenixville Pike will be surveyed at the beginning of Remedial Action Construction to confirm this. Given its hydraulic positioning with respect to the FDA/MA, direct sampling of Valley Creek is not proposed as an integral part of the MNA program. Water level monitoring will be made part of the MNA program to verify that future groundwater flow from the FDA/MA continues to be toward the northeast, away from Valley Creek. Should future hydraulic monitoring show changes in the groundwater flow directions that could potentially impact Valley Creek, then the monitoring of Valley Creek will be reconsidered as a component of the MNA program.

Performance Standard X.E.3

The wells and creek sampling points shall be sampled quarterly for the first three years. The samples shall be analyzed for VOCs and natural attenuation parameters at each sampling location. The natural attenuation parameters will be determined by USEPA in consultation with PADEP during Remedial Design. Based on the findings of the first three years of sampling, the appropriate sampling frequency for subsequent years will be determined by USEPA in consultation with PADEP.

Clarification to Performance Standard X.E.3

Since the issuance of the ROD, there are a number of factors that indicate that the quarterly frequency of groundwater quality monitoring is excessive. These factors include:

1. Groundwater now flows in a northeasterly direction toward the MPA, groundwater will be actively remediated at the MPA, and there are no immediate downgradient receptors to FDA/MA groundwater;

2. Valley Creek is not hydraulically downgradient from the FDA/MA;

3. Hill Brook Circle is hydraulically upgradient and has been connected to a water supply pipeline; and,

4. Given the historic database and relative groundwater velocities, quarterly sampling is not necessary to confirm these trends or detect changes that may need to be further evaluated.

Alternatively, quarterly sampling and water level monitoring for the first year (i.e., five events, including a baseline event and four subsequent quarterly events) would provide an initial database that could be used to assess the potential variability in groundwater concentrations northeast of the FDA/MA. Should this monitoring indicate substantial changes in groundwater quality, then quarterly monitoring would be continued until this potential variability stabilizes, at which time semi-annual monitoring would be implemented through the remainder of the 3-year sampling period. Should there be little variability detected during the first four monitoring events, then future monitoring would be conducted on a semi-annual basis.

Performance Standard X.E.4

Monitoring shall continue until such time as USEPA, in consultation with PADEP, determine that the performance standard for each contaminant of concern has been achieved. If USEPA and the Commonwealth make such a determination, the wells shall be sampled for twelve consecutive

quarters throughout the entire plume and if contaminants remain at or below performance standards the monitoring program shall be discontinued.

Clarification to Performance Standard X.E.4

There are no proposed clarifications to this performance standard except that, as described in the Clarification to Performance Standard X.E.3, the FDA/MA wells identified in Section 3.4 may be monitored at a revised monitoring frequency given the changed hydraulic conditions.

Performance Standard X.E.5 through X.E.11

No clarifications are needed for the remaining ROD Performance Standards (i.e., Nos. X.E.5 through X.E.11). These requirements include recognition of the 5-year statutory review, well construction and decommissioning procedures, and the implementation of institutional controls, including, but not limited to, deed restrictions and/or notifications to local officials to restrict the installation of drinking water supply wells or new development at or near the Site.

Performance Standard X.E.5: Five year statutory reviews under Section 121 (c) of CERCLA will be required, as long as hazardous substances remain onsite and prevent unlimited use and unrestricted access to the Site. Five year reviews shall be conducted at the initiation of the remedial action in accordance with USEPA guidance document, Structure and Components of Five- Year Reviews (OSWER Directive 9355.7-02, May 23, 1991).

Performance Standard X.E.6: Existing monitoring wells which serve no useful purpose shall be properly plugged and abandoned consistent with PADEP's Public Water Supply Manual, Part II, Section 3.3.5.11 and Chester County Health Department Rules and Regulations Chapter 500, in order to eliminate the possibility of these wells acting as a conduit for future groundwater contamination and to prevent adverse impacts to the remedy. Wells that USEPA determines are necessary for use during the long term monitoring program will not be plugged.

Performance Standard X.E.7: No newly commenced or expanded groundwater pumping in the aquifer shall be implemented which will adversely affect the plume migration. Institutional controls will be used to identify the Site as property underlain by contaminated groundwater, and to prevent the human consumption of contaminated ground water.

Performance Standard X.E.8: Drinking water supply wells shall not be installed in the area of the contaminated groundwater plume.

Performance Standard X.E.9: No new development at or near the Site shall adversely affect the natural hydraulic containment and plume migration.

Performance Standard X.E.10: Title restrictions along with other appropriate means shall be used to implement the requirements above.

Performance Standard X.E.11: Title restrictions will be appropriately recorded with the Chester County Recorder of Deeds.

3.2.2 Operations and Maintenance Requirements

As the main component of this remedy is groundwater sampling and analyses, the only noteworthy operations and maintenance concern affecting the design is the provision for future access to the monitoring points and the streamlining of future sample collection efforts.

3.3 Design Basis

The design basis includes Site-specific technical information that will be used to complete the design of the MNA program and, as such, fulfills the Design Basis Report requirements of the Consent Decree. This information includes groundwater sample analyses results and groundwater level monitoring data in the vicinity of the FDA/MA as described below.

3.3.1 PDI Findings

As discussed above, the PDI data indicate that there has been a change in the predominant groundwater flow direction from that measured during and prior to the Remedial Investigation. The current northeasterly groundwater flow direction is supported by all of the data collected during the PDI, and the groundwater divide identified during previous investigations is no longer present. Apparent reasons for the change in groundwater flow direction include the cessation of pumping from the former public supply and residential wells south of the FDA/MA in addition to regional hydraulic stresses imposed by pumping at local quarries.

The PDI groundwater sampling analysis results for wells in the immediate vicinity of the FDA/MA were generally consistent with those collected during the Remedial Investigation. However, to the south of the FDA/MA, a trend of stable or decreasing VOC concentrations was identified, while in one well to the northeast (CC-9), concentrations of VOCs appear to have slightly increased (possibly as a result of the aforementioned change in groundwater flow direction). With respect to the Hillbrook Circle residential wells, a decreasing trend in the concentration of TCE was observed in DW-41, which is believed to reflect the effect of natural attenuation processes possibly in conjunction with the change in groundwater flow direction.

3.3.2 Post-PDI Continuous Groundwater Level Data

As discussed above, the groundwater levels obtained from the site since the completion of the PDI substantiate the PDI findings of groundwater flow toward the northeast. In addition, the post-PDI data have shown a substantial recovery from November 2002 through March 2003, when water level monitoring was discontinued. The results of hydraulic monitoring are shown on Figure 3-1.

3.4 Design of Monitored Natural Attenuation System

In recognition of the nature of the data required to be collected to achieve the MNA design objectives described in Section 3.1, the proposed monitoring well network selected for the FDA/MA MNA remedy consists of seven wells. These wells are CC-5, CC-9, CC-11R (a replacement for well CC-11, as described below), CC-14, DW-41, DW-60 and DW-69, as shown on Figure 3-2.

3.4.1 Groundwater Chemistry Characterization

The groundwater chemistry characterization component of the MNA program will include the following:

- Groundwater samples will be collected from wells CC-5, CC-9, CC-11R, CC-14, DW-41[8], DW-60, and DW-69;
- The sampling frequency will be quarterly for the first year (five events; baseline plus four quarterly events). At the end of the first year of monitoring, the data will be evaluated, and if warranted, a proposal for a reduced monitoring frequency will be made to USEPA and PADEP;

[8] VOCs were not detected in any other retrofitted Hillbrook Circle monitoring well during the PDI.

- Samples will be analyzed in a laboratory for VOCs and natural attenuation parameters[9] (NAPs); and,

- Field parameters that will be tested for and recorded at the time of sampling will include pH, specific conductance, turbidity, temperature, along with field NAPs including Eh and dissolved oxygen.

The groundwater quality characterization wells were selected based on the following:

- CC-5 is the shallowest well and has consistently yielded the highest concentrations of VOCs. In addition, this well has the longest history of sample analyses results, providing the best opportunity to assess long term hydrogeochemical trends in the area;

- CC-9 is located northeast of the FDA/MA and has shown a small increase in VOC concentrations, potentially in response to the change in groundwater flow direction. This well will be monitored to help assess the effect of the changed groundwater flow direction and attenuation of contaminants downgradient of the FDA/MA;

- CC-11R will be located between the FDA/MA and the MPA, approximately 230 feet to the northwest of existing monitoring well CC-11. As noted in the PDI, the integrity of well CC-11 is likely compromised[10] and therefore a replacement well is proposed. Well CC-11R will serve as a downgradient well (based on the current groundwater flow direction) providing information on groundwater quality downgradient of the FDA/MA and upgradient of the MPA. Existing well CC-11 is proposed for decommissioning;

- CC-14 is located northwest of the Mounded Area and has had low level detections of VOCs. This well will be monitored to verify groundwater flow direction.

- DW-41 is the closest residential well to the FDA/MA. This well was sampled during the PDI and, while only very low levels of site related VOCs were detected, this well exhibited the highest VOC concentrations compared to the other two Hillbrook Circle wells monitored in this general area. This well has also exhibited a decreasing trend from historically higher VOC concentrations. Therefore, well DW-41 will be monitored to demonstrate continued improvement in groundwater quality south of the FDA/MA; and,

- DW-60 and DW-69 will be monitored to continue to assess regional flow directions and provide background groundwater geochemical data during the assessment of MNA geochemical trends. This well was sampled during the PDI and indicated non-detect concentrations for all VOCs.

[9] Laboratory NAPs include chloride, dissolved organic carbon, light hydrocarbons (ethane, ethane, and methane), nitrate, sulfate, alkalinity, total dissolved solids, total iron, total manganese, and total organic carbon.

[10] Sounding of this well during the Pre-Design Investigation indicated that the depth is almost 70 feet shallower than indicated on the well log, and that, based on the well log and measurements made during the Pre-Design Investigation, there is only a 2.2-foot open interval remaining. It is likely that caved material has effectively plugged the flowing features in this well such that there is a lag in the response of the water level in the well to changes in head that occur in the aquifer and/or the well disproportionately monitors surface water infiltration influences.

With the exception of wells DW-69, DW-60, and CC-11R, each of these wells was monitored during the RI, providing historical data that will help to assess long-term trends in the hydrogeochemical characteristics of the groundwater.

3.4.2 Hydraulic Gradient Monitoring

In order to continue monitoring the hydraulic gradients in the vicinity of the FDA/MA (i.e., verify the northeast groundwater flow direction), groundwater elevations will be measured in the four FDA/MA monitoring wells described above (CC-5, CC-9, CC-11R, and CC-14), along with three retrofitted monitoring wells located in the Hillbrook Circle residential development (DW-41, DW-60, and DW-69). The hydraulic gradient characterization component of the remedy will therefore consist of the following:

- A synoptic round of manual groundwater levels will be collected prior to each round of groundwater sampling from wells CC-5, CC-9, CC-11R, DW-41, DW-60 and DW-69; and,
- Hydraulic gradients will be calculated and an assessment of the overall groundwater flow direction will be made and reported for each monitoring event.

3.4.3 Sample Collection and Analyses

Groundwater samples will be collected and analyzed in accordance with the Remedial Action Sampling and Analysis Plan in Appendix E-4. Sample collection will be completed using low flow purge methods. Field testing of conventional natural attenuation parameters (dissolved oxygen and oxidation/reduction potential) along with other conventional field parameters (pH, temperature, specific conductance, and turbidity) will be conducted using a flow-through cell. Dedicated bladder pumps will be installed in the wells that will be monitored for VOCs and NAPs to facilitate future monitoring events.

3.4.4 Data Analyses

The groundwater elevation data will be plotted on a base map and contoured to establish the groundwater flow direction across Hillbrook Circle and the FDA/MA. The geochemical data will be analyzed for spatial and temporal changes, as well as assessing the strength of the natural attenuation processes occurring in the groundwater. Particular attention will be given to the VOC concentrations immediately downgradient of the FDA/MA (i.e., at well CC-9) to assess potential temporal changes in groundwater quality resulting from the changed groundwater flow direction

and future attenuation of these contaminants. VOC concentrations at well DW-41 will be evaluated to continue to assess the decreasing trends in concentration observed to the south of the FDA/MA.

Once sufficient hydrogeochemical data is obtained and groundwater conditions are believed to have equilibrated in the vicinity of the FDA/MA, formal evaluations of natural attenuation processes and data trends will be completed. Data summaries will be provided to USEPA following the completion of each monitoring event. Formal data presentations and evaluations will be included in Annual Monitoring Reports.

4.0 MPA SOIL REMEDY DESIGN

4.1 Project Description / Objectives

Section VI.13.b of the Consent Decree identifies the scope of the remedial action for MPA soils to be "capping of the Main Plant Area and related activities as set forth in Section X.B. of the ROD." The ROD describes the remedy as "Installation of a cap to prevent direct contact with contaminated soils at the Main Plant and to reduce the potential for continued migration of these contaminants to the groundwater." The ROD also requires the closure and removal/disposal of aboveground structures and tanks, and associated equipment, materials, and debris prior to the installation of the cap. The existing concrete foundations will remain below the cap.

The objective of the design of the MPA soil remedy is to complete the design of a cap that meets the ROD Performance Standards as presented and clarified below in Section 4.2.1. Since the future use of the property and the specific components of the MPA groundwater remedy have not as yet been defined[11], a cap section which satisfies the ROD Performance Standards and can accommodate various possible future use scenarios has been incorporated into this design report. Further review and possible modifications to the cap material may be required once the future use of the property is determined.

4.2 Design Criteria

This section describes the criteria that was utilized for the design of the MPA cap and, as such, fulfills the Design Criteria Report requirements of the Consent Decree.

4.2.1 ROD Performance Standards

The following presents the Performance Standards for the MPA soil remedy as listed in Section X.B of the ROD along with clarifications of those Performance Standards based on events that occurred and/or new information obtained following the issuance of the ROD. The Performance Standards for the MPA soil remedy are presented below in italics followed by the respective clarifications.

[11] An in-situ bioremediation Pilot Study is currently ongoing. The system construction was completed in June 2003 and aquifer pre-conditioning and bioaugmentation were completed at the end of January 2004. Groundwater samples are currently being collected on a monthly basis.

Performance Standard X.B.1

The Main Plant Area shall be capped with a final cover designed and constructed to provide long-term minimization of migration of liquids into the Main Plant Area soils. The cap shall function with minimum maintenance and include a drainage layer to promote drainage and minimize erosion. The cap shall accommodate settling and subsidence and consist of a Flexible Membrane Liner (FML) or equivalent that achieves a permeability less than or equal to 1x10-7 cm/sec. The cap shall also be designed to facilitate other components of the remedy including the groundwater extraction and treatment system. The design of the cap should consider the existing use of the property.

The cap shall be installed over all areas of the Main Plant Area with surface or subsurface soil contaminated above any of the following levels:

Contaminant	*Soil Clean-up Standard (mg/kg)*
Trichloroethene (TCE)	*0.70*
1,1-Dichloroethene (1,1-DCE)	*0.05*
1,1-Dichloroethane (1,1-DCA)	*0.39*
Tetrachloroethene (PCE)	*1.22*
Vinyl Chloride	*0.01*
Methylene Chloride	*0.50*
Benzene	*0.38*
Ethylbenzene	*74.00*
Toluene	*9.47*
Xylene	*8,790.00*

These levels are based on an amount of residual contamination that if left in the soil, would not cause the groundwater to be contaminated above Maximum Contaminant Levels. See FS, Appendix B. The exact location and extent of the capped area shall be determined during remedial design. Any existing equipment or aboveground storage tanks in the area where the cap shall be placed shall be removed to complete the cap construction in accordance with the requirements above.

Clarification to Performance Standard X.B.1

This Performance Standard, amongst other things, indicates that the cap design should accommodate:

- Existing and future use of the property; and,
- Aboveground components of the MPA groundwater remedy.

For the purposes of this design, it has been assumed that the Chemclene Corporation operations at the Site will be terminated and the facility dismantled and closed. However, since the future use of the property is uncertain, this design consisting of a flexible membrane liner with a vegetated surface provides for the most flexibility and can readily accommodate future alternatives, such as replacement of the vegetated surface with a paved surface. Such future alterations would require review of surface water controls. The future use of the property will be limited to exclude any activities, modifications, or operations that would interfere with the integrity of the constructed remedy. All intended uses should be reviewed and approved by a registered professional engineer. The lateral extent of the cap has been refined from that discussed in the PDI Report and as described in Section 4.3 below.

With respect to the facility closure requirements, the condition and distribution of aboveground buildings, tanks and debris have been modified as a result of the fire that occurred after the ROD. Most importantly, the cap will need to extend over the former Main Plant Building as USEPA has determined that it is no longer a suitable cap. This will require removal of the remaining building structure (with the exception of the floor slab and foundation) and associated equipment.

Performance Standard X.B.2

An O&M program shall be implemented to maintain the integrity of the cap for a period of 30 years. Maintenance shall include repairs to the cap as necessary to maintain the permeability standard, correct any breaches, or any effects of settling, subsidence or erosion. An operation and maintenance plan for the cap will be required, and is subject to approval by EPA in consultation with the Commonwealth of Pennsylvania.

Clarification to Performance Standard X.B.2

The specific details of an O&M program for the proposed cap are included in the O&M Plan (Appendix E).

Performance Standard X.B.3

Structure Removal: The existing quonset hut structure (former container storage area) has collapsed and is no longer acting as a cap to the soils beneath it. Therefore the collapsed

quonset hut shall be decontaminated and removed. Once the structure is removed, a representative sample shall be collected to determine if the quonset hut debris is hazardous under RCRA. If hazardous, the quonset hut debris shall be decontaminated in accordance with the Hazardous Debris Rule and properly disposed of or reused.

Soil sampling shall be conducted beneath the quonset hut to determine if soils are impacted above any of the cleanup levels listed in B.1 above. The cap shall be extended to include this area, if soils are so impacted, and/or, in order to achieve the requirements set forth in (1) above.

Clarification to Performance Standard X.B.3

This Performance Standard is no longer outstanding. As discussed in Chemclene's Remedial Action Report that has been approved by USEPA, Chemclene has fully satisfied this Performance Standard (see Section 1.1 of this Report). Therefore, no additional design or construction is required. However, the cap will be extended over this area.

Performance Standard X.B.4

Underground Storage Tanks: The former USTs previously excavated, and currently located on property adjacent to Chemclene, shall be decontaminated and properly disposed of or reused in accordance with RCRA. Representative samples shall be collected and analyzed to confirm decontamination. If the tanks continue to contain hazardous substances, they shall be shipped to a proper off-site disposal facility in accordance with RCRA. If it is determined subsequent to decontamination that the tanks do not contain hazardous substances, the tanks may be reused or disposed off-site.

Clarification to Performance Standard X.B.4

This Performance Standard is no longer outstanding. As discussed in Chemclene's Remedial Action Report that has been approved by USEPA, Chemclene has fully satisfied this Performance Standard (see Section 1.1 of this Report). Therefore, no additional design or construction is required.

Performance Standard X.B.5

Main Building: The area occupied by the Main Building shall serve as a cap consistent with the Standards in (1) above. Presently, the building acts as a cap over an area of soils at the Main Plant. The building shall be inspected and maintained so as to reduce potential infiltration of

precipitation to the extent possible and provide an effective cap over the sols at this area of the Site. If and when the building no longer reduces potential infiltration of precipitation and serves as an effective cap over the soils at the Main Plant Area, the building shall be removed, in accordance with the provisions set forth in this part.

In the event the building is removed, for any reason, soils beneath the removed building shall then be analyzed to determine if contamination is present above any of the cleanup standards listed in B.1 above. If contamination is above cleanup standards, the cap as set forth in (1), above shall be extended to cover this area.

Clarification to Performance Standard X.B.5

The Main Building was damaged as a result of the 1999 fire and therefore can no longer effectively serve as a cap as described. Chemclene completed soil sampling beneath the Main Building slab as discussed in the RDWP where, based on the sample analyses results, it was determined that the cap would extend over the Main Building area (see Section 4.3). The design includes covering the existing foundation concrete floor slabs associated with the Main Building (and the former Quonset Hut) beneath the MPA cap.

Performance Standard X.B.6

Closure of the Main Building (including Loading Dock and Chemical Laboratory): The Main Building shall be closed in accordance with 25 Pa. Code 25 § 265.110 through 265.119, 265.442(7); 40 C.F.R. §§ 264.110 through 264.120, 264.178, 270.14(b)(13). Closure will consist of removal and proper disposal of all hazardous wastes; decontamination of the floor, related distillation equipment, contaminated structures (i.e., walls), and associated processing equipment. Contents of the building (i.e., process equipment, lab chemicals, etc.) shall be sampled to determine if hazardous substances are present. If hazardous substances are present, the material shall be shipped to a proper off-site disposal facility in accordance with RCRA.

Clarification to Performance Standard X.B.6

As discussed above, the Main Building was damaged during the 1999 fire and thus the structure and contents differ from what was described in the ROD. Chemclene's approved Remedial Action Report addresses closure of the Main Building and associated facilities and impacts to its closure associated with the fire. According to the report, Chemclene had completed all specified RCRA closure activities required by this Performance Standard, except for the decontamination

of the Main Building walls and floors, which reportedly could not be performed due to the loss of the building in the fire. Remnant building walls and supporting structures will need to be razed before the cap can be extended in this area. Based upon the information presented in Chemclene's report, which we understand has been approved by USEPA, no further RCRA closure activities are required to satisfy this Performance Standard.

Performance Standard X.B.7

Wastewater generated during decontamination activities shall be properly managed in accordance with Pennsylvania Hazardous Waste Management regulations and/or the Clean Water Act.

Clarification to Performance Standard X.B.7

Should decontamination wastewaters be generated during routine cap construction activities and should they be determined to be RCRA hazardous waste, then they will be managed in accordance with the Pennsylvania Hazardous Waste Management regulations.

Performance Standard X.B.8

Fugitive dust emissions generated during remedial activities will be controlled in order to comply with fugitive dust regulations in the federally-approved SIP for the Commonwealth of Pennsylvania 25 Pa. Code §§ 123.1 – 123.2 and the National Ambient Air Quality Standards for Particulate Matter in 40 C.F.R. §§ 50.6 and Pa. Code §§ 131.2 and 131.3.

The Main Plant Area perimeter fence shall be maintained to prevent trespassing and access to the Site during construction. The fence shall be maintained for 30 years to prevent unauthorized access to the capped areas.

Clarification to Performance Standard X.B.8

No clarification of the first paragraph of this Performance Standard is needed. With respect to the second paragraph, portions of the existing perimeter fence may need to be altered and/or removed to construct the MPA cap. Ultimately, a fence surrounding the cap will be provided following cap construction.

Performance Standard X.B.9

The cap shall not be breached or adversely affected. The capped area may continue to be used for commercial operations or other activities as long as the cap is not adversely affected. Institutional controls shall be implemented to accomplish this.

Clarification to Performance Standard X.B.9

In accordance with this requirement specified in this Performance Standard, the selected cap will be appropriate for anticipated activities associated with the MPA groundwater remedy. Future Site use may require modifications to the cap in the future, however, future use of the property will be limited to exclude any activities, modifications, or operations that would interfere with the integrity of the constructed remedy. All intended uses should be reviewed and approved by a registered professional engineer.

4.2.2 Regulatory Guidance

There are a number of technical and regulatory guidance documents available that may be applicable to the cap design depending on the ultimate cap section selected. The primary technical guidance that was utilized for the selection and design of the MPA soil cap was the *Technical Guidance for RCRA/CERCLA Final Covers, USEPA, Office of Solid Waste and Emergency Response, April 2002.*

4.2.3 Operation and Maintenance Requirements

From a practical perspective and consistent with the ROD Performance Standard X.B.1, the cap should function with minimum maintenance.

4.3 Design Basis

The design basis includes Site-specific technical information that was used to complete the design of the cap and, as such, fulfills the Design Basis Report requirements of the Consent Decree. This information includes soil sample analyses results used to define the lateral extent of the cap and surface topography used to define the grading and surface water management of the cap as described below.

Lateral Extent of Cap

As discussed in further detail in the PDI Report (PDI Report Section 3.3), soil sample analyses collected by USEPA and Chemclene were evaluated in the RDWP and used to define the lateral extent of the MPA cap. This data included RI data and Chemclene post-fire data. Two borings east of the MPA, on East Whiteland Township property, were conducted during the PDI to assess whether the cap should extend onto the Township property. Since no exceedances of the ROD SCS were observed in any of the sample analyses results from the two off-site borings, the lateral extent of the MPA cap will extend from the "cover limit line" as defined in the RDWP, to the eastern property boundary. The northern limit will extend to the property boundary and extend southward to encompass the existing concrete surfaces within the property line, as shown on Figure 4-2 of this Final Design Report, as presented on Figure 4-2. The limits of the cap have been adjusted slightly from those presented in the Preliminary Design Report. Previously, the cap extended to the fence line, which, in certain areas, is located outside the property limits. The delineated extent of the MPA cap discussed above is approximately 0.75 acre.

Cap Grades and Surface Water Management

As described in Section 4.0, the remaining structures, equipment, empty tanks, and debris in the MPA, including the existing hydrogen peroxide storage tank/repackaging area will need to be removed prior to cap construction, as indicated by Figure 4-1. Since these structures have yet to be removed the topographic contours provided to de maximis by USEPA in March 2000 have been used to prepare a general Site grading plan. Once these structures are removed a pre-construction survey to verify the topographic layout and grades prior to construction will be performed by the Contractor for a measurement and payment of soil cover volumes.

4.4 MPA Cap Design

4.4.1 Cap Section Alternatives

Three cap material sections were identified in the PDR:

- MPA Cap Alternative A – Vegetative Cover with a FML and Geocomposite Drainage Layer, or Equivalent;
- MPA Cap Alternative B – Vegetative Cover with Earthen Hydraulic Barrier and Drainage Layer; and,
- MPA Cap Alternative C – Asphalt Concrete Cap.

Of these three alternatives, Alternative A was selected as the proposed cap. As previously indicated, not only does this cap meet the ROD performance standards, it also is the most accommodating to various possible future. Other engineering considerations such as useful life, O&M requirements, constructability issues, grading issues, surface water management, and cost were evaluated.

MPA Cap Alternative A - Vegetative Cover with a FML and Geocomposite Drainage Layer, or Equivalent. The FML or geomembrane portion of this cap has a permeability of less than $1x10^{-7}$ cm/sec. The overlaying geocomposite consists of a synthetic geonet between two nonwoven geotextiles that will convey infiltration and promote drainage off of the geomembrane. A secondary function of the geocomposite and geomembrane is to provide a marker on top of impacted soils for future use/disturbance considerations. A vegetative cover will reduce surface water runoff, infiltration, and erosion potential and provide physical protection of the underlying geomembrane. Operation and maintenance requirements would be limited to vegetation maintenance (e.g., mowing) and limited soil cover repairs that might result from erosion. Institutional controls for this alternative will limit vehicular access, excessive ground pressure, and excavation or other disturbances of the subsurface. This cap alternative provides the greatest flexibility of potential future commercial use. For example, an asphalt concrete surface could replace the vegetative layer to accommodate future activity.

4.4.2 Cap Layout

Figure 4-2 presents the proposed final grade contours and layout for the MPA. In general, an average slope of approximately 2.5%. The proposed grades have been developed to minimize excavation of existing topography and incorporation of existing concrete slabs below the cap. Therefore, the grades are not a constant slope.

The cap system, as shown on Figure 4-3, will consist of a multi-layer cap system in accordance with the guidance documents. The multi-layer system will consist of, from top to bottom, the following:

Vegetative Layer: a minimum 6-inch thick layer of soil capable of sustaining vegetation to be placed over the cover layer, seeded and fertilized to establish a vegetative cover that will help reduce erosion of the cap;

Cover Layer: as required to provide a minimum soil thickness of 18 inches above the geomembrane;

Drainage Layer: the drainage layer will consist of a geocomposite drainage layer, consisting of geonet embedded between two non-woven geotextiles. The geocomposite will provide filtration and lateral drainage for infiltration;

Geomembrane Layer: a 40-mil thick geomembrane will be used.

Cushion Layer: a minimum 6-inch thick layer of grading fill will be placed to attain the required slope and provide for a stable base for subsequent cap system components.

4.4.3 Design Analysis

As indicated in the PDR, the design of the selected cap will consider and complete, where appropriate, the following geotechnical and engineering analyses:

- Slope Stability Analysis;
- Cap Stability Analysis;
- Frost Depth Analysis;
- Evaluation of Erosion Potential;
- Settlement/Differential Settlement Analysis; and
- Infiltration Models such as Water Balance or Hydrologic Evaluation of Landfill Performance (HELP) Evaluation (for drainage layer design, where applicable).

Further evaluation has determined that based on the relatively flat slope of approximately 2.5% on average, slope stability and cap stability analysis is not warranted. The remaining analysis is described in the following paragraphs.

Frost Depth Analysis/Wet-Dry Cycle Analysis

Geomembranes do not need to be placed below the frost zone according to published data on low temperature performances of geomembranes (Mills and Budiman, 1991; Peggs et al., 1991). Samples tested at low temperatures showed an increase in tensile strength and decrease in strain at failure compared to samples tested at ambient temperature. However, under low temperature, failure strain was still in the order of several hundred percent, typical of a ductile material. Therefore, low temperature embrittlement of geomembranes (GM) is not a design concern. This is consistent with USEPA (2002) guidance, which indicated that neither "GCLs nor GMs appear to be vulnerable to freeze-thaw damage."

Although the geomembrane itself will not be affected by freezing, there is a potential for objects below the geomembrane to be uplifted by frost heave if the frost penetrates below the geomembrane. Placement of the cap will reduce the availability of water for freezing also. The potential for uplifted objects to damage the geomembrane will also be minimized by proof-rolling the ground surface and the preparation of a surface relatively free of rocks and stones below the geomembrane. Additionally, the use of grading fill and cushion soil relatively free of rocks and large particles (i.e., greater than 1-inch) under the geosynthetics will be protective of the geosynthetics from potential damage from uplifted, underlying materials.

Evaluation of Erosion Potential

An evaluation of the effects of erosion due to rainfall on the area to be capped has been performed for the MPA. The analysis involved using the Universal Soil Loss Equation (USLE) to estimate the amount of soil loss caused by erosion of the upper soil surface. These calculations are included in Appendix B-1. This equation determines the potential erosion of an area, in tons of soil loss per acre per year, based on the slope, length of continuous slope, land coverage (i.e., friction), and rainfall type.

The calculation was performed to determine the average annual soil loss that could occur under the proposed conditions. The maximum allowable annual soil loss is 2.0 tons/acre/year (USEPA, 1982). Based on the calculations included in Appendix B-1, the proposed conditions will results in an average annual soil loss of less than 1.0 tons/acre/year.

Settlement/Differential Settlement Analysis

The capped area was evaluated for its capacity to resist the stresses induced by formation of a void immediately below the cap layer. The analysis, based on the method presented in Appendix A of USEPA Publication 625/4-91/025, includes a calculation of induced tensile stresses that would develop due to out-of-plane forces from the overburden if localized subsidence were to occur. This analysis is based on the conservative assumption that the geomembrane liner is anchored at the edge of the postulated void. For analysis of the cap, the void size is assumed to be spherical and 6 feet in its largest direction. This size was selected to represent the hypothetical collapse of a rusted container such as a refrigerator that was buried with a thin cover. This analysis is typically used for a landfill scenario but remains relevant for this Site since existing underground structures (if any) will be covered by the cap. This analysis conservatively considers that only the geomembrane liner actively carries the overburden load. The analysis is

included in Appendix B-2 and demonstrates that readily available geomembrane exhibit factors of safety in excess of 1.50 and therefore is acceptable.

Total settlement analysis was not completed since the cap will be built atop existing surfaces which have experienced surcharges greater than that of a cap. For example, the capped portion is mostly paved and at one point supported structures such as buildings, garages, and storage tanks.

Infiltration Models such as Water Balance or Hydrologic Evaluation of Landfill Performance (HELP) Evaluation

The purpose of the drainage layer is to convey water infiltrating the vegetative and cover soil layers to an outlet to minimize the time water is in contact with the geomembrane, and to reduce the hydraulic head over the geomembrane, thereby reducing the potential for sloughing, instability of the overlying soil layers, and ponding water. Since the proposed slopes are relatively flat the potential for sloughing or instability of the overlying soil layers is unlikely however ponding water remains a design concern. To determine the required transmissivity of the geocomposite to reduce ponding water, a water balance assessment was completed.

The water balance assessment, included in Appendix B-3, was performed for the proposed slope (2.5%) conditions. The analysis indicates that the geocomposite would be required to have a minimum transmissivity of 2.0×10^{-3} m^2/sec, which is well within the range of readily available geocomposite products.

In order to determine the maximum head over the geomembrane, within the overlying soil layers, the HELP model was used. The HELP model, developed by the U.S. Army Corps of Engineers Waterways Experiment Station, is a quasi two-dimensional hydrological model of water movement across, into, through, and out of landfills. The model accounts for climatological, soil and design data and utilizes a solution technique to conduct a water balance in terms of surface storage, runoff, infiltration, percolation, evaportranspiration, soil moisture storage and lateral drainage.

The output generated by HELP is included in Appendix B-3. The model indicated that with a geocomposite, there is a maximum hydraulic head of 0.5 inches on the geomembrane from a peak daily storm event where the critical flow path is expected to be 2.5% for a maximum length of

150 feet. However, with such a shallow inclination, there is little risk of veneer slope failure due to this temporary saturated condition.

4.4.4 Fence and Access

A fence with vehicle gate currently encloses the MPA. This existing fence will be incorporated into the final MPA enclosure fencing where possible and replaced where damaged or where the existing fence needs to be removed to transition the cap into adjacent areas. A lock will be installed on the vehicle gate to restrict access. Vehicle access will be restricted and a maximum allowable load restriction will be implemented. A fence detail can be found on Figure 4-4.

4.4.5 Surface Water Management

Surface water management is an important aspect for the cap design. In general, the surface water management system design will maintain the existing drainage patterns in the MPA. The existing drainage patterns are described as follows. Locally, surface water flows southward, generally unchannelized, from the woody areas north of the MPA. A berm exists along the north and east perimeter of the MPA that redirects this surface water around the fenced MPA portion of the Site. Precipitation that falls within the boundaries of the MPA flows via sheet flow generally southward. All surface water that flows around and across the MPA ultimately discharges on-site to the naturally vegetated meadow of the Williams Transco pipeline right-of-way.

The design of the surface water management for the MPA cap consists of enhancing the northern diversion berm/channel and maintaining the existing diversion berm along the east side. The vegetated cap is graded such that stormwater will continue to flow via sheet flow across the MPA to the Williams Transco pipeline right-of-way.

4.4.5.1 Surface Water Management Design

The design of surface water management is based on the guidelines presented in PADEP's Erosion and Sediment Pollution Control Program Manual. In general the criteria for surface water management are twofold:

- Reduce erosion; and,
- Compare the estimated peak runoff after cap construction to that estimated for preconstruction conditions.

An assessment of the erosion potential for the proposed cap was completed as described in Section 4.4.3.

Peak runoff analysis was conducted for the existing Site conditions and the proposed Site conditions. Due to the relatively small size of the Site, the runoff rates and volumes were determined using methods described in Urban Hydrology for Small Watersheds, identified as Technical Release 55 (TR 55) developed by the Soil Conservation Service (June 1986). The entire Site, that is, the MPA, FDA/MA, and other undisturbed areas within the Site were included in the analysis. The design storm selected for this analysis was the 25 year 24 hour storm.

Peak runoff analysis for existing conditions (pre-construction) and proposed conditions (post-construction) are included in Appendix C-1 and C-2, respectively. Based on these analyses, there is no net increase in peak runoff from proposed conditions compared to existing conditions.

4.4.6 Temporary Erosion and Sedimentation Controls

Temporary erosion and sedimentation controls will be required during remedial action construction of the MPA cap. These temporary measures may include:

- Silt fences and/or straw bales at the topographically upgradient and downgradient portions of the work area in order to reduce surface water runon to the construction area and prevent sediment transport from the construction area;
- Diversion swale or berm upgradient of work area to divert storm water from the northern woody area away from the construction activities; and,
- Rock construction entrance/exit to minimize construction vehicles carrying soils outside of the construction area.

An Erosion and Sedimentation (E&S) Control Plan will be prepared by the RAC and submitted to Chester County Soil Conservation Service for review as described in Section 5.4 of this Report. The RAC selected to construct the remedial action will be required to submit an E&S Plan as a formal construction submittal that will meet the requirements of PADEP's Erosion and Sediment Pollution Control Program Manual in addition to meeting the minimum requirements of the submitted E&S Plan. Details for E&S controls can be found on Figure 4-5.

4.4.7 MPA Demolition Plan

Prior to construction of the MPA cap, the existing structures and debris must be removed by the RAC from the MPA area. A preliminary listing of the materials to be removed from the Site and disposed of is provided on Figure 4-1. As discussed in this section, the MPA is considered RCRA clean and does not require further decontamination. Prior to demolition, existing tanks will be inspected and any liquids will be containerized, characterized and disposed of in accordance with the appropriate Federal and State regulations. Existing debris, concrete, masonry, building materials, and other materials to be disposed of will be scanned with a PID to confirm the material is free of VOC contamination. All materials except the trailer and hydrogen peroxide system (i.e., tanks) will be disposed of in a RCRA D – Non-hazardous landfill. It is currently expected that the Owner, Lloyd Balderston, will relocate the peroxide system to another facility located off-site. It is unlikely the trailer ever contacted hazardous materials and will be salvaged if possible. Materials that exhibit VOC concentrations will either be cleaned until PID readings are non-detect or will be segregated and properly characterized prior to disposal. Demolition requirements are included in Appendix F.

5.0 PERMIT EQUIVALENCIES, PERMITS AND APPROVALS

This section discusses the various permit equivalencies and approvals required to implement the remedial actions presented in this design.

5.1 Approval for Backfilling Existing Excavations

Background

As discussed in Section 1.1, the two existing excavations in the FDA/MA were reportedly created in 1952 as borrow pits for aggregate used for construction of the adjacent Williams Transco pipeline. Industrial wastes were subsequently placed in these pits at some point in time during the 1960's and 1970's. The industrial wastes were removed in the 1980's and the pits have remained empty collecting leaf litter and surface water. The northern borrow pit measures approximately 30 feet by 50 feet (approximately 0.03 acre) and is approximately 10 to 15 feet in depth. The southern borrow pit is smaller, measuring approximately 25 feet by 40 feet (approximately 0.02 acre) and is approximately 5 to 8 feet in depth. Based on observations conducted since the year 2000, the northern borrow pit continually holds perched surface water 6 feet or more in depth. The northern pit has been observed to be used by amphibians (salamanders). Conversely, the southern borrow pit holds water only intermittently. The remediation plan for soils impacted by previous industrial waste placement (see Section 2.4) requires that the pits are backfilled to allow installation of SVE wells through the base and immediately adjacent to the sides of the pits.

Regulatory Analyses

According to the recent Supreme Court decision, Solid Waste Authority of Northern Cook County vs. U.S. Army Corps of Engineers (ACOE), the ACOE does not have jurisdiction under Section 404 of the Clean Water Act over non-navigable, isolated, intrastate waters. The surface water contained within the existing excavations are non-navigable, isolated and intrastate waters and, therefore, are not "waters of the United States," and a permit to fill them under Section 404 of the Clean Water Act is not required from the ACOE.

Protected Species Issues

As discussed above, some amphibians have been observed to utilize the northern borrow pit. Review of county lists and other information from the United States Fish and Wildlife Service (USFWS) and PA Department of Conservation and Natural Resources (DCNR), and PA Fish and

Game Commission indicate that it is unlikely that threatened or endangered species inhabit the pits as follows:

- There are no federally protected amphibians in Chester County or in Pennsylvania, and the two federally protected reptiles (bog turtle and Eastern massasauga rattlesnake) in Pennsylvania would not utilize borrow pit ponds as habitat. There is one protected plant species reported from Chester County (small whorled pagonia), but it is not likely to be found in cutover woods.

- Three state-listed species could potentially utilize the borrow pits, but their existence is considered unlikely based on the RI ecological assessment and responses to information requests from state agencies, both of which did not indicate a significant potential for these species being present at the Site. These three species are New Jersey chorus frog (Endangered), coastal plain leopard frog (Endangered), and red-bellied turtle (Threatened). New Jersey chorus frog and red-bellied turtle have been reported in the surrounding counties. Coastal plain leopard frog is reported from eastern Chester County and the surrounding counties.

- State listed species are regulated by three Agencies in Pennsylvania: 1) PA DCNR, Bureau of Forestry (plants only); 2) PA Fish and Boat Commission (aquatic invertebrates, fish, reptiles, and amphibians; and 3) PA Game Commission (mammals and birds).

An information request letter was sent to Justin Newell/Pennsylvania Natural Diversity Inventory (PNDI) on January 13, 2003 requesting information on all known occurrences of state and federally protected species within a 2-mile radius of the project Site. According to John Arway of the Environmental Services Division of the PA Fish and Boat Commission, a PNDI search is typically required as part of a Chapter 105 (Dam Safety and Waterway Management) permit and may be needed as part of this remediation plan. Similar letters were also sent to Anthony Ross of the PA Game Commission and John Arway of the PA Fish and Boat Commission.

Responses to these letters were obtained. The PA Game Commission responded that no state-listed endangered or threatened species of birds or mammals are known to occur within a 2-mile radius of the proposed project area.

The PA DCNR responded that several populations of the endangered species *vibernum nudum* (*panicum lucidum* and *woodwardia areolata*) were last observed in 1993. Also, the *amelanchier canadensis* is a species of special concern last observed near the site in 1997. The DCNR recommended that Site surveys be conducted. A part of the RI, an ecological assessment of the Site was conducted. This assessment did not identify any of these species.

The PA Fish and Boat Commission responded that the State endangered and Federally-listed bog turtle is known in the vicinity and it was recommended that a survey be conducted. The response also indicated that if there are no impacts to wetlands, there should be no adverse impact to the bog turtles. Based on this criterion, a habitat for bog turtles is not believed to be present as confirmed by the RI ecological assessment.

Based on the RI information, the ROD, and these additional responses, no further assessments or permits are considered necessary for the proposed construction activities.

5.2 Chester County Permit Requirements for Monitoring Well and SVE Well Installation

Chester County requires that well drilling/installation permits be obtained prior to the installation of groundwater monitoring wells. As was done for the monitoring wells installed during the PDI, the selected well drilling subcontractor will obtain this permit prior to the installation of replacement monitoring well CC-11R and will have a copy of the permit on-hand during well installation. Prior to abandonment of any wells, the Chester County Health Department (CCHD) will be provided with all required information, such as location of the wells, and any required permit will be obtained.

5.3 Air Emissions Permitting

According to Section 7.11 of PADEP's Technical Guidance Document for Best Available Technology and Other Permitting Criteria for Remediation Projects (Technical Guidance Document, February 23, 1996) all soil venting projects should incorporate air cleaning or contaminate destruction devices. The guidance further indicates that all remediation projects that emit air toxics at a rate greater then 4 tons per year are required to obtain a plan approval for construction of an air emission source.

The Southeast Region of PADEP's Air Quality New Source Review Section was contacted to determine what information should be submitted to PADEP as part of an air emissions permit equivalency for the SVE project (personal communication with Mr. George Monasky, Air Pollution Control Engineer III – Remediation Permitting). PADEP indicated that the permit equivalency should include a project description, estimation of air emissions, description of the proposed air pollution control devices, including an evaluation of alternatives, system removal efficiency, and maintenance and monitoring requirements. This air permit equivalency submittal

package for the Air Quality New Source Review Section will be prepared by the Remedial Designer and submitted to PADEP and USEPA under a separate cover prior to construction.

5.4 Erosion and Sedimentation Control Plan Approval

According to PA Code, Title 25, Chapter 102, an E&S Control Plan is required for any earth moving activity disturbing areas greater than 5,000 sf. or 0.11 acres. The planned remedial construction in both the FDA/MA and MPA areas each exceed this minimum area and thus, an E&S Control Plan is required.

An E&S Plan will be prepared by the RAC and submitted to Chester County Conservation District for their review and concurrence. Copies of the E&S Plan will be provided to USEPA and PADEP for their review prior to Remedial Action Construction. Due to the Superfund status of the project and the limited amount of land disturbance, a construction National Pollution Discharge Elimination System (NPDES) Permit Equivalency is not applicable.

5.5 Williams Transcontinental Pipeline Crossing

The access road into the FDA/MA will cross the Williams Transco pipeline right-of-way as shown on Figure 2-6A. The current pipeline right-of-way crossing has already been upgraded using a woven geotextile covered by 18 inches of gravel in accordance with Williams Transcontinental's requirements to allow drilling equipment to cross the right-of-way during the PDI (see Section 2.4.1). This crossing may need to be upgraded further to allow the crossing of heavier vehicles associated with the proposed remedial construction activities, including the use of haul trucks for materials, equipment and soil to and from the FDA/MA portion of the Site. Additional crossings of the right-of-way are planned for electrical service and MPA cap construction vehicles and equipment across the existing Chemclene driveway.

A Site visit with Mr. Brian Rich, a representative from Williams Transcontinental, was held on January 22, 2002 to discuss construction vehicle and utility crossings of the pipelines for both the FDA/MA and MPA remedial action construction. With respect to construction vehicle crossings (one at the FDA/MA and one at the MPA), Mr. Rich indicated that the depth to the gas transmission lines will be established by Williams Transcontinental and an assessment of the existing cover thickness will be made. At the FDA/MA, Mr. Rich indicated that the thickness of the current access road is likely sufficient, however given that the access road will need to be widened, additional material (2A modified aggregate or DGA) could be added to the existing

road to increase its thickness, if necessary. With respect to the electrical service that will need to be brought into the FDA/MA (estimated three phase, 600 amp, 460 volt service), Mr. Rich indicated that the service can be suspended above ground or buried. PECO has indicated that service should be brought in below grade. The buried service must be encased in steel or concrete conduit, and there is a minimum clearance of 18 inches above the top of the gas pipelines. Single phase, 100 amp, 240 volt electric service was installed to the MPA in May 2003.

Design details of the crossing improvements will be reviewed with Williams Transcontinental prior to construction. No formal permits or forms have been requested by Williams Transcontinental.

5.6 Electrical Service Approvals

In an attempt to facilitate the construction and operation of the SVE system, the Philadelphia Electric Company (PECO) was contacted to define their design, construction, and schedule requirements for providing electrical service to the FDA/MA portion of the Site. The MPA portion of the Site has already had service installed as noted above. A preliminary plan to meet PECO's requirements is summarized below.

- A one-page service application has been submitted to PECO defining billing information and power requirements of the SVE system. This application was submitted and is provided in Appendix D. PECO has completed their review of the application and has completed their design. The bid documents to construct the service have been completed, but at this time it has not been constructed. The completed bid documents are included in Appendix F.

- PECO has already confirmed that 3-phase power is available along Phoenixville Pike.

- PECO will provide a fiberglass transformer pad for the RAC to install at the SVE Blower Building. This installation must be within 20 feet of an access roadway for service.

- The RAC will install underground conduit, pull boxes, and install service supply wires from the existing PECO utility pole to the Williams Transco pipeline right-of-way.

- Williams Transcontinental has been contacted and has indicated that the electrical power can be encased in steel or concrete conduit across the pipeline right-of-way and the electrical transformer shall be installed a minimum of 30 feet from the right-of-way.

- The RAC will install underground wiring north of the pipeline right-of-way to the PECO transformer foundation at the Blower Building.

- Following the RAC's installation of the wiring and inspection, PECO will install transformer, install meter box, and connect wiring to their system.

- PECO requests a minimum of 4 weeks advance notice to schedule installation of transformer and energizing of system. Actual installation lead time is dependent on crew availability due to sever weather and availability of transformer.

5.7 Telephone Service Approvals

The installation of telephone cable is not anticipated to present potential construction delays. Coordination is required by the RAC to allow telephone company (Verizon) to lay cable within the same trench excavation with the electrical power lines (see Section 5.6 above). Activation of the telecommunication service will be performed within 3 business days after the request for service activation is provided to their business office.

5.8 Local Building, Construction and/or Zoning Permits (East Whiteland Township)

The CSDG presented construction plans based on the Preliminary Design Report at an East Whiteland Township board meeting. A meeting will be scheduled by the CSDG with the Township Director of the Department of Codes and Life Safety to present the planned remedial construction activities and final remediation construction plans will be presented to the Board of Supervisors at a regularly scheduled Supervisors Public Meeting. It is understood that Township concurrence with the proposed work obtained during these meetings will satisfy Township acceptance of the construction project.

5.9 Existing Easements / Access Approvals

In order to obtain permission and formal agreements for permanent access to the Site, a search was conducted of the Chester County Recorder of Deeds records and the East Whiteland Township officials, real estate department of utility companies including, PECO, Verizon, and AT&T, Williams Pipeline / Transco, real estate department of current and former railroad companies, including CSXT, Norfolk Southern, ConRail, Penn Central, Reading, and Pennsylvania Railroads, and the Transportation Department of the Commonwealth of Pennsylvania were contacted in order to identify entities that have easement rights that may be affected by this access road. The following provides an initial assessment of access requirements for the work:

- The access road and alignment, in addition to the FDA/MA and MPA portions of the Site, lie entirely within the property limits of Lloyd Balderston, who has access rights to the property including common rights to a portion of the access road with the Lupos, discussed below. The CSDG has entered into access agreements with Mr. Balderston.

- The Lupo residence is located adjacent to the north side of the access road, as shown on Figure 2-6A. According to the records reviewed, 20-foot wide access easement from Phoenixville Pike was deeded to their property as common, uninterrupted use. The easement is to be maintained by the Lupo family. The CSGD has entered into access agreements with Mr. Lupo.

- The real estate holding company of the former Penn Central Railroad indicated that this portion of the Phoenixville line, from Glenlock Station of former Pennsylvania railroad to Devault, PA, was not included in the properties acquired from the bankrupted Pennsylvania Railroad. Their records indicated that the former Pennsylvania Railroad easement was returned to the Bolderston property as a condition in the easement, upon the abandonment of this portion of the railroad trackage. The Commonwealth of Pennsylvania, Department of Transportation indicated that they have the current claim to this former right of way. Thus, this Railroad Right of Way, no longer exists.

- PECO and Verizon have easement rights within the twenty foot wide Lupo property easement for the underground installation of their respective service lines to the Lupo residence.

- Williams Transco Pipeline Company has an approximate 125 foot wide easement for high pressure gas transmission pipeline crossing the Balderson property in an east-west direction between the Lupo residence and both the FDA/MA and the MPA. The southeast corner of the MPA is located within this easement. Temporary agreements for crossing this easement have been in effect for prior remedial investigation activities.

Procurement of any additional access agreements will be obtained by the CSDG.

5.10 Off-Site Remediation Waste Disposal Approvals

Various remediation wastes will be generated during remedial action construction and will need to be disposed of at appropriate off-site disposal facilities. Several types of disposal facilities will be contacted for acceptance requirements. These facilities must be in good standing with federal and state agencies to be considered. After remediation waste sampling and characterization is complete, the appropriate disposal facility will be selected by the USEPA, notified, and arrangements made for transport.

6.0 REMEDIAL ACTION CONSTRUCTION RELATED PLANS

6.1 Health and Safety Plan

All remediation activities shall be conducted in accordance with a USEPA-accepted HASP. A HASP has been prepared as part of this remedial design and presents general health and safety requirements for the anticipated Site activities. A HASP is presented in Appendix E. In addition, the RAC responsible for the remedial construction activities shall prepare a detailed HASP (RAC HASP) as a formal pre-construction submittal for acceptance by the Owner's Representative and the Agencies prior to the commencement of work. The RAC HASP will meet the minimum requirements of the Design HASP and be in accordance with OSHA standards set forth at 29 CFR Parts 1910, 1926, and 1904. Specific requirements for the RAC's HASP are included in the Technical Specifications presented in this Report.

One important aspect of the health and safety is monitoring and minimizing exposures to organic vapors. The HASP will address this potential concern, although VOC emissions are not expected to be substantial because the majority of the soil excavation work is being conducted at a relatively shallow depth (2 feet) and the volume of VOC-impacted soil disturbed during SVE well drilling and SVE pipeline trenching can be easily controlled. The RAC will be required to estimate emissions of VOCs during all ground disturbance activities to determine the potential for exposure to VOC emissions. As a precaution during these activities, the ambient air in the workers' breathing zone will be monitored using an organic vapor analyzer. The control and monitoring of potential VOC emissions generated during construction will be addressed utilizing a hierarchy of actions as generally described below:

- Should VOC vapors be detected (at levels of concern defined in HASP) in the worker breathing zone, then engineering controls, such as the use of covers, limited exposed surfaces, etc., will be employed;
- Should, after the implementation of engineering controls, worker breathing zone impacts still occur, requiring upgrades of respiratory protection, air monitoring will be conducted at the boundary of the exclusion zone; and,
- If VOC vapors of concern are present and persist at the exclusion zone boundary, then air monitoring will be conducted at the Site perimeter upwind of the nearest residence.

Additionally, dust suppression measures and, if required, particulate monitoring will be implemented to control PCB particular matter. Based on the results of the air monitoring

described above, appropriate actions (which would include stopping work and re-evaluating the construction methods) will be taken to assure that both construction workers and residents are not adversely impacted.

In addition to addressing health and safety matters concerning potential VOC exposures, the Technical Specifications will require that the RAC's HASP stress the importance of and focus on routine construction safety.

Due to the nature of the Site and required remediation, it is not necessary for all construction activities to be conducted with 40-hour trained HAZWOPER personnel. There are a number of construction activities that would not result in exposure to hazardous substances or where exposure to hazardous substances would be extremely limited. For example, Site Preparation activities outside the FDA/MA (electrical, access road, etc.), construction of the SVE blower system, and delivery of equipment and materials would not result in exposure to hazardous substances. The HASP will identify which remedial construction activities require HAZWOPER trained personnel and the procedures that will be followed so that remedial construction activities are completed by personnel with the appropriate level of training.

6.2 Decontamination Plan

The remedial construction will be managed such that personnel, equipment, and vehicles working in potentially contaminated areas will be required to go through a decontamination zone prior to entering the clean zone as defined in the HASP. Various decontamination procedures will be completed in the decontamination zone depending on the type of activity and potential for contamination of those persons, equipment, and vehicles. For example, personnel having little to no exposure to hazardous substances would have little to no decontamination requirements prior to re-entering the clean zone. Workers, equipment, and vehicles with higher levels of potential exposure to hazardous substances would be required to undergo more rigorous decontamination steps. At a minimum, a stone pad will be provided for tire cleaning over which trucks will drive across before entering the clean zone. In addition, a decontamination pad will be established for the decontamination washing of personnel, equipment, and vehicles, as required.

Since the details of the decontamination procedures to a large degree depend on the specific construction procedures and methods, the RAC will be responsible for developing a detailed Decontamination Plan as part of the RAC's formal pre-construction submittals prior to

commencement of work. Minimum requirements for the RAC's Decontamination Plan are included in the Technical Specifications in this Report. The RAC's Decontamination Plan will be submitted to the Agencies for review prior to commencement of work.

All equipment used for soil excavation, SVE well installation, and SVE pipeline excavation activities will be decontaminated to the extent necessary at the decontamination pad prior to leaving the contaminated zone. Portions of drill rigs, excavator buckets, and other equipment directly contacting contaminated soil shall be cleaned by a high pressure hose or other methods. Decontamination washing of personnel, equipment, and vehicles shall be performed at a decontamination pad located in an appropriate area chosen by the RAC. The RAC shall be responsible for installing, inspecting, and if necessary, repairing the decontamination pad during construction activities. All liquids used for decontamination will be controlled, handled, stored, and disposed of appropriately. Vehicles used to deliver equipment and supplies will be kept on the improved access roads and will not require decontamination except for crossing the rock tire cleaning pad.

6.3 Construction Quality Assurance Plan

The purpose of the Construction Quality Assurance Plan (CQAP) is to describe the quality assurance program that will be used during remedial activities to verify and document that construction is completed in accordance with the intent of the Final Design and specific quality control requirements contained in the Technical Specifications. The CQAP is provided in Appendix E of this Report.

The Construction Quality Assurance (CQA) program is a planned system of activities that provides assurance that a project is constructed in accordance with the intent of the Design. It includes such items as inspections, verifications, audits, and evaluations of materials and workmanship necessary to determine and document the quality of the constructed work. The basic components of the CQA program are:

- Preparation of a CQA Plan;
- Pre-construction review of project components;
- Field monitoring all remedial construction activities;
- Records and recordkeeping;

- Review of technical and laboratory data;
- Final walk over and favorable review of the completed work; and,
- Compilation and presentation of applicable data, logs, as-built documents, field and design changes, photographs, and comments into a Construction Completion Report.

These CQAP guidelines provide for qualified personnel to monitor the progress and quality of construction. This program is intended to provide an objective overview of construction progress and identify potential deficiencies or problem areas during construction.

Critical aspects of the CQA program for this project include:

- Sampling and analysis;
- Compaction (backfill existing excavations and SVE trenches/blower building foundation);
- Well construction (replacement well CC-11R and SVE wells);
- Piping and leak testing (SVE soil vapor conveyance system);
- Mechanical/electrical (SVE blower system); and,
- Earthwork (cap, excavation backfill).

The Consent Decree requires the identification of a Resident Engineer (Engineer) and Quality Assurance Official. The CQA Plan also defines the overall project organization, lines of communication and responsibilities of the various parties, which include:

- Agency personnel and Oversight Contractor (if used);
- Owner (CSDG);
- Owner's Representative;
- Engineer;
- QA Official and Quality Assurance Team;
- Remedial Action Contractor / Construction Manager; and,
- Subcontractors.

6.4 Residual Materials Management Plan

Remediation wastes will be generated during the construction. The primary residuals will be liquid wastes from decontamination and existing excavation dewatering, and solid wastes from PCB-impacted soil excavations, SVE and monitoring well drilling cuttings, and used PPE.

All residual waste will be sampled and characterized prior to off-site disposal. The Agencies will be notified as to the final disposal decision for each waste stream, the estimated amount of material to be sent off-site, and the selected receiving facilities prior to shipment off-site. Remediation wastes will be transported by haulers to off-site disposal facilities who are licensed to handle the required type material (i.e., hazardous or non-hazardous). Details for soil excavation/disposal and liquids handling are presented in the Technical Specifications of this Report.

6.5 Remedial Action Contingency Plan

A Remedial Action Contingency Plan has been developed and presented in Appendix E of this Report as part of the Operation and Maintenance Plan. The Remedial Action Contingency Plan will present procedures that may be taken should either the implementation of remedial action construction or the operation of the implemented remedy not proceed as projected.

For example, should future monitoring of hydraulic gradients, as part of the implementation of the MNA remedy, show that groundwater from the FDA/MA flows toward Valley Creek and can potentially impact the creek, then monitoring of Valley Creek in future MNA monitoring events would be reconsidered. Another example relates to the operation of the SVE system, should performance monitoring of the SVE system indicate difficulties with meeting the shut-down criteria at certain SVE well locations, then contingent methods would be implemented, which could include, but are not limited to, the installation of additional SVE wells and/or passive entrainment of atmospheric air.

6.6 Operation, Monitoring, and Maintenance Plan

An O&M Plan for post-construction activities is presented in Appendix E-3 of this Report. The O&M Plan will focus primarily on the SVE system and to a lesser extent the MPA cap. There are only limited O&M requirements associated with the FDA/MA groundwater remedy, which are

provided for in the Sampling and Analysis Plan. A final O&M Plan will be developed following the completion of remedial action construction, as discussed in Section 2.6.

6.7 Sampling and Analysis Plan

The SAP is presented in Appendix E-4 of this Report. The SAP provides information regarding field sampling, analytical, and quality assurance/quality control (QA/QC) procedures that will be used to gather the data necessary for design of the remedy and to measure progress towards meeting the Performance Standards.

7.0 REMEDY IMPLEMENTATION

7.1 Contracting Strategy

A specific contracting strategy to complete the remedial action construction of this design is currently being developed and will be presented in detail in the Final Design. A short list of potential Contractors has been identified and approved by the USEPA.

7.2 Remedial Action Schedule

The Remedial Action Construction schedule presented on Figure 7-1 reflects the current plan for implementing the Remedial Design for the MPA soil, FDA/MA soil, and FDA/MA groundwater remedy components. Important milestones of this schedule include:

- Issuing of Bidding and Construction Documents;
- Submitting the Final Design;
- Agency Finalizing the ROD Amendment;
- Agency approval of the Final Design; and,
- Remedial construction mobilization.

The presented schedule anticipates construction activities beginning in 2005. This schedule can be impacted by the nature and extent of Agency comments on the Final Design Report, formalization of the ROD Amendment, weather, and availability of the selected Remedial Action Contractor.

The in-situ groundwater bioremediation pilot test schedule is presented on Figure 7-2. As shown, the duration of the microcosm study extended to almost eight months prior to the final selection of an electron donor. Ultimately, an electron donor solution of methanol, ethanol, acetate and lactate (MEAL) was selected, and aquifer pre-conditioning was initiated in late December. Aquifer bioaugmentation was completed at the end of January 2004, and currently the groundwater is being sampled on a monthly basis in accordance with the approved Pilot Study workplan. The schedule shown beyond bioaugmentation is essentially the same as that presented

in the Pilot Study workplan, except that the groundwater monitoring period has been extended by three months based on the results of the microcosm study.

GOLDER ASSOCIATES INC.

David S. Ley, P.G.
Senior Hydrogeologist

Brian J. Eichlin, P.E.
Associate

8.0 REFERENCES

CH2MHill, 1995. Final Data Summary Report, April 1995.

CH2MHill, 1997. Remedial Investigation Report for the Malvern TCE Site, January 1997.

Chemclene Corporation, 2000. Remedial Action Report, Malvern TCE Superfund Site, September 2000.

Golder Associates, 2004. Pre-Final (90%) Design Report for the Malvern TCE Superfund Site, June 2004.

Golder Associates, 2002. Accelerated In-Situ Bioremediation Pilot Test Work Plan for the Malvern TCE Superfund Site, December 2002.

Golder Associates, 2002. Focused Feasibility Study for the Malvern TCE Superfund Site, May 2002.

Golder Associates, 2002. Pre-Design Investigation Report for the Malvern TCE Superfund Site, May 2002.

Golder Associates, 2000. Remedial Design Work Plan for the Malvern TCE Superfund Site, May 2000.

PADEP, 2000. Erosion and Sediment Pollution Control Program Manual, Bureau of Water Quality Protection, Division of Waterways, Wetlands and Erosion Control, March 2000.

USACE, 2002. Soil Vapor Extraction and BioVenting Engineer Manual, June 2002.

USEPA, 2002. Technical Guidance for RCRA/CERCLA Final Covers, Office of Solid Waste and Emergency Response, April 2002.

USEPA, 1999. Consent Decree (Civil Action 99-3715, date of entry December 13, 1999).

USEPA, 1996. Technical Memorandum: Mathematical Modeling Using the New EPA Soil Screening Level Method to Establish Primary Remediation Goals for Soil Contamination at the Malvern TCE Superfund Site, December 1996.

USEPA, 1982. Evaluating Cover Systems for Solid and Hazardous Waste, September 1982.

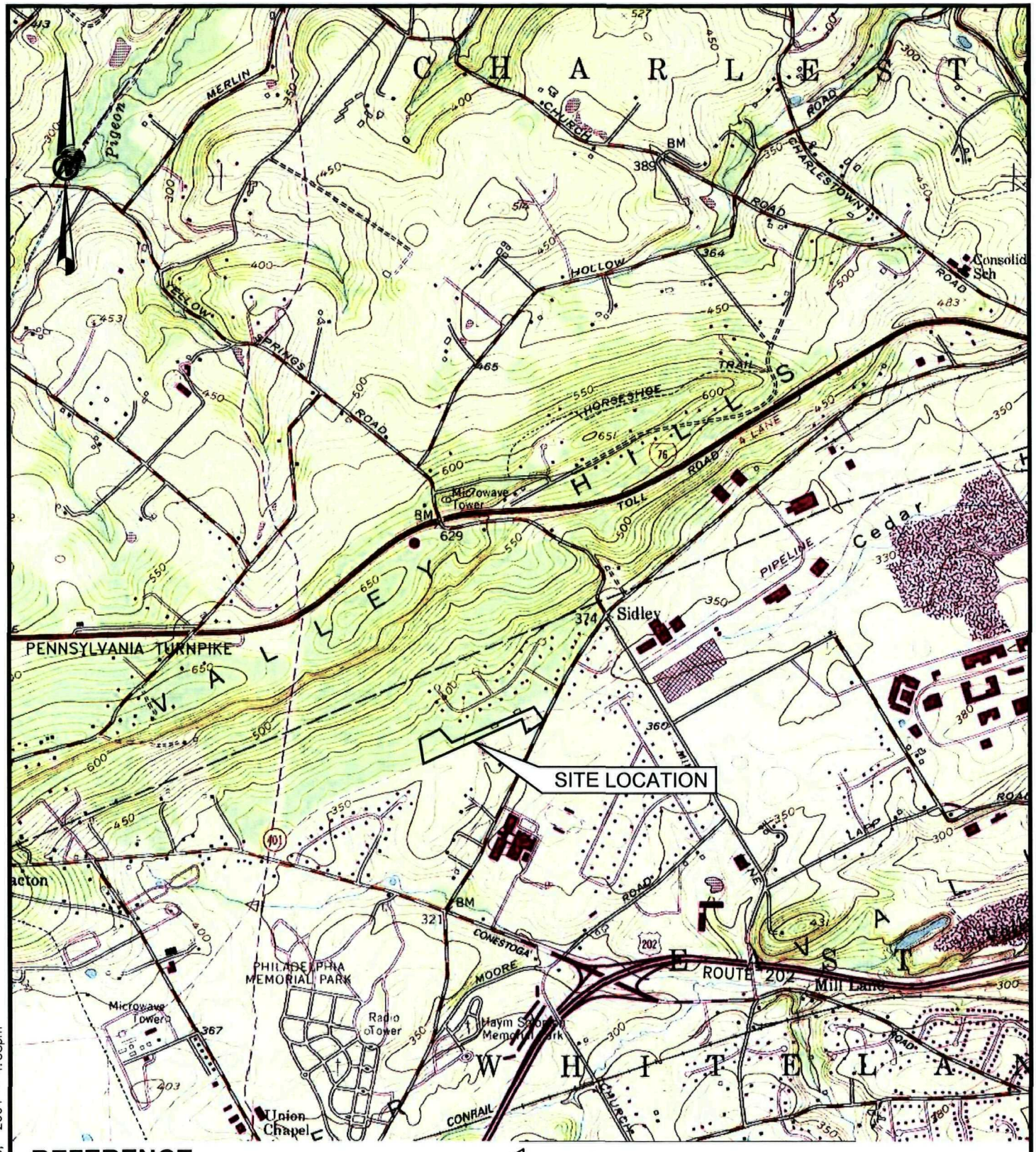

REFERENCE

1.) BASE MAP TAKEN FROM U.S.G.S. 15 MINUTE QUADRANGLE OF MALVERN, P.A..

QUADRANGLE LOCATION

2000 0 2000

SCALE FEET

Golder Associates
Philadelphia USA

SCALE	AS SHOWN
DATE	06/17/04
DESIGN	AM
CADD	AM
CHECK	DSL
REVIEW	BJE

FILE No.	0036000M023		
PROJECT No.	003-6000	REV.	0

TITLE

SITE LOCATION MAP

MALVERN TCE SUPERFUND SITE

FIGURE 1-1

Drawing file: 0036000M023.dwg Jun 16, 2004 - 4:58pm

NOTES

1.) PHOTOGRAPHS TAKEN DURING SITE VISIT ON JANUARY 8, 2003.

Golder Associates
Philadelphia USA

FILE No.	0036000M034
PROJECT No.	003-6000
REV.	0
SCALE	N.T.S.
DATE	06/17/04
DESIGN	DSL
CADD	AM
CHECK	DSL
REVIEW	BJE

TITLE

MPA CURRENT CONDITIONS

MALVERN TCE SUPERFUND SITE

FIGURE 1-3

Drawing file: 0036000[illegible]4.DWG Jun 16, 2004 - 4:59pm

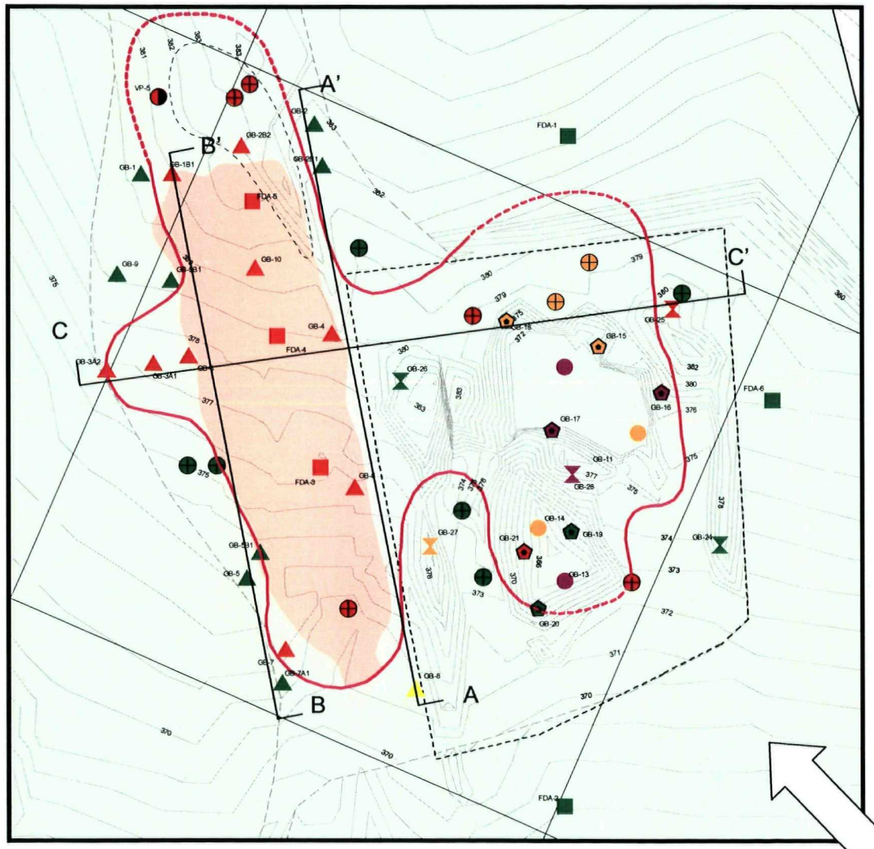

Fence Diagram Orientation

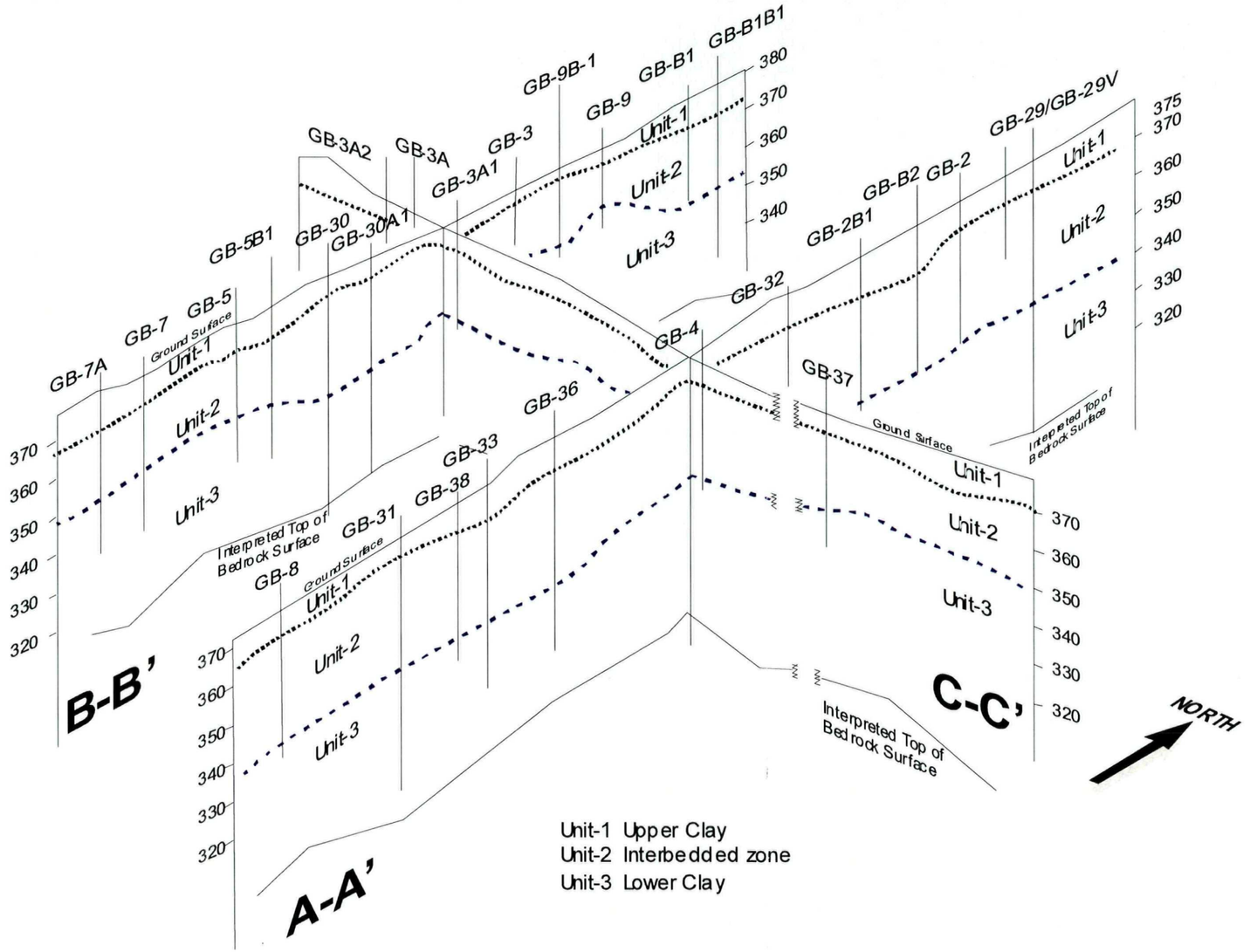

Unit-1 Upper Clay
Unit-2 Interbedded zone
Unit-3 Lower Clay

JOB No.: 003-6000	SCALE: AS SHOWN	**GENERALIZED FENCE DIAGRAM**	
DR BY: DSL	DATE: 6/4/04		
CHK BY: DSL	FILE No.: Fence_Diag.doc		
REV BY: RSW	DIRECTORY: 003-6000\90%\Figures		
Golder Associates		MALVERN TCE SUPERFUND SITE	FIGURE: 2-1

SDMS US EPA Region III

Imagery Insert Form

Site Name & OU: Malvern TCE **Document ID:** 212916

Site DSN: PA-0322 **Site Status:** NPL **Releasability:** REL

Some images in this document may be illegible or unavailable in SDMS. Please see reason(s) indicated below:

☐ ILLEGIBLE due to bad source documents. Images(s) in SDMS equivalent to hard copy.

Specify Type of Document(s) / Comments:

☐ Includes ____ COLOR or ____ RESOLUTION variations. Unless otherwise noted, these pages are available in monochrome. The source document page(s) is more legible than the images. The original document is available for viewing at the Superfund Records Center.

Specify Type of Document(s) / Comments:

☐ RESTRICTED CONFIDENTIAL BUSINESS INFORMATION (CBI-R):
Restricted and or copyrighted documents that cannot be imaged.

Specify Type of Document(s) / Comments:

☒ UNSCANNABLE MATERIAL:
X Oversized or ___ Format. Due to certain scanning equipment capability limitations, the document page(s) is not available in SDMS. The original document is available for viewing at the EPA Region 3 Superfund Records Center.

Specify Type of Document(s) / Comments:

Oversized Site Maps, Figures 1-2 through 2-3

☑ Document is available at the EPA Region 3 Superfund Records Center.

Specify Type of Document(s) / Comments:

8.008, 8A

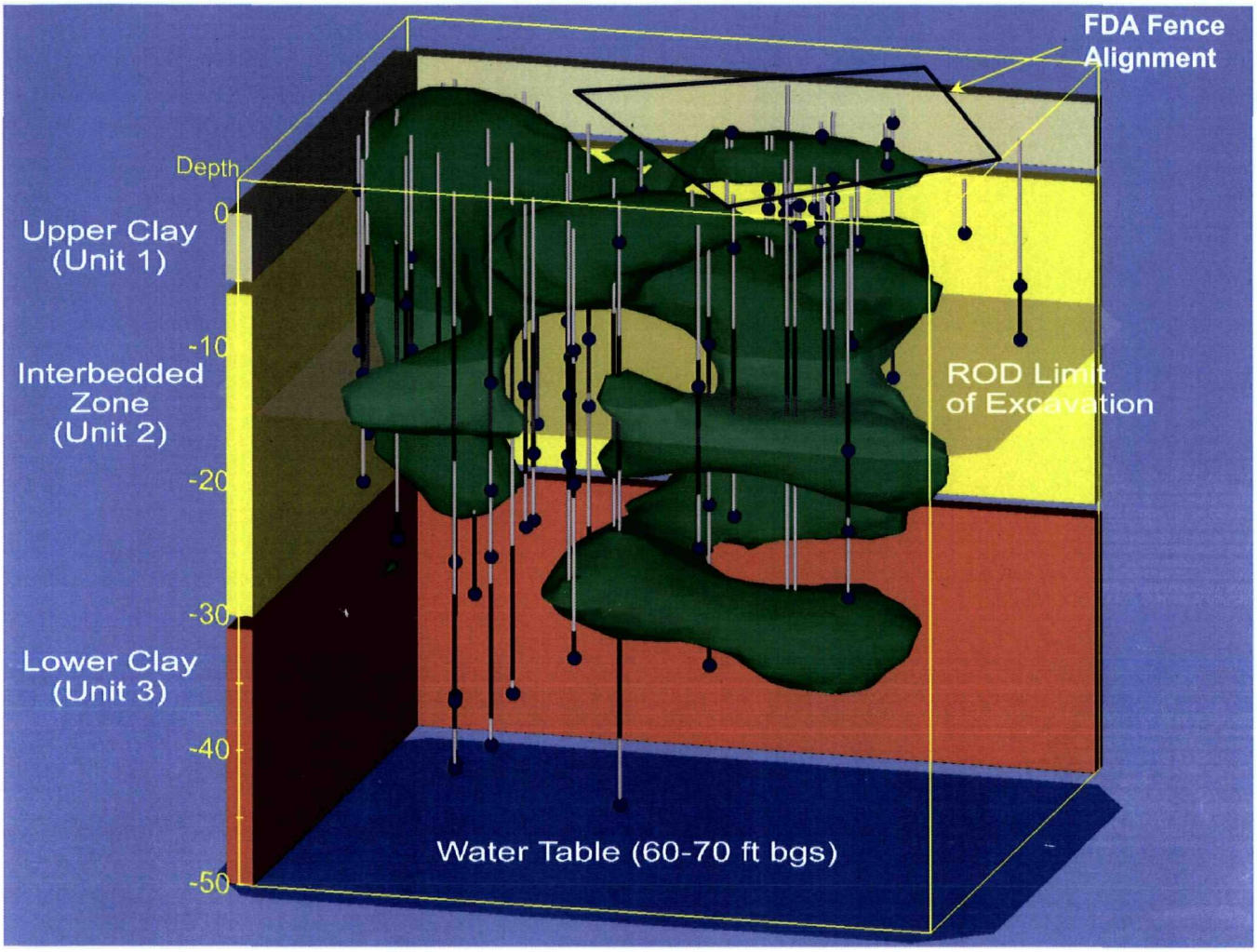

Legend

Interpreted Zone of Total Exceedances of the ROD Soil Clean-up Standards.

Sample location

Notes

- Interpreted Zone of Exceedances generated using EVS™ (Environmental Visualization System)
- Orientation: Looking north-northwest

JOB No.: 003-6000	SCALE: AS SHOWN	Interpreted Zones of VOC Exceedances of ROD SCS - FDA/MA Area	
DR BY: ACK	DATE: 11/21/03		
CHK BY: ACK	FILE: Soil Data EVS 2.doc		
REV BY: THR	DIRECTORY: /90% Design		
Golder Associates		Malvern SVE Pilot Study	FIGURE: 2-4

SDMS US EPA Region III

Imagery Insert Form

Site Name & OU: Malvern TCE **Document ID:** 2125916

Site DSN: PA-0322 **Site Status:** NPL **Releasability:** REL

Some images in this document may be illegible or unavailable in SDMS. Please see reason(s) indicated below:

☐ ILLEGIBLE due to bad source documents. Images(s) in SDMS equivalent to hard copy.

Specify Type of Document(s) / Comments:

☐ Includes ____ COLOR or ____ RESOLUTION variations. Unless otherwise noted, these pages are available in monochrome. The source document page(s) is more legible than the images. The original document is available for viewing at the Superfund Records Center.

Specify Type of Document(s) / Comments:

☐ RESTRICTED CONFIDENTIAL BUSINESS INFORMATION (CBI-R):
Restricted and or copyrighted documents that cannot be imaged.

Specify Type of Document(s) / Comments:

☒ UNSCANNABLE MATERIAL:
X Oversized or ___ Format. Due to certain scanning equipment capability limitations, the document page(s) is not available in SDMS. The original document is available for viewing at the EPA Region 3 Superfund Records Center.

Specify Type of Document(s) / Comments:

Oversized Site Maps, Figures 2-5 through 2-6B

☑ Document is available at the EPA Region 3 Superfund Records Center.

Specify Type of Document(s) / Comments:

4.008, 8A

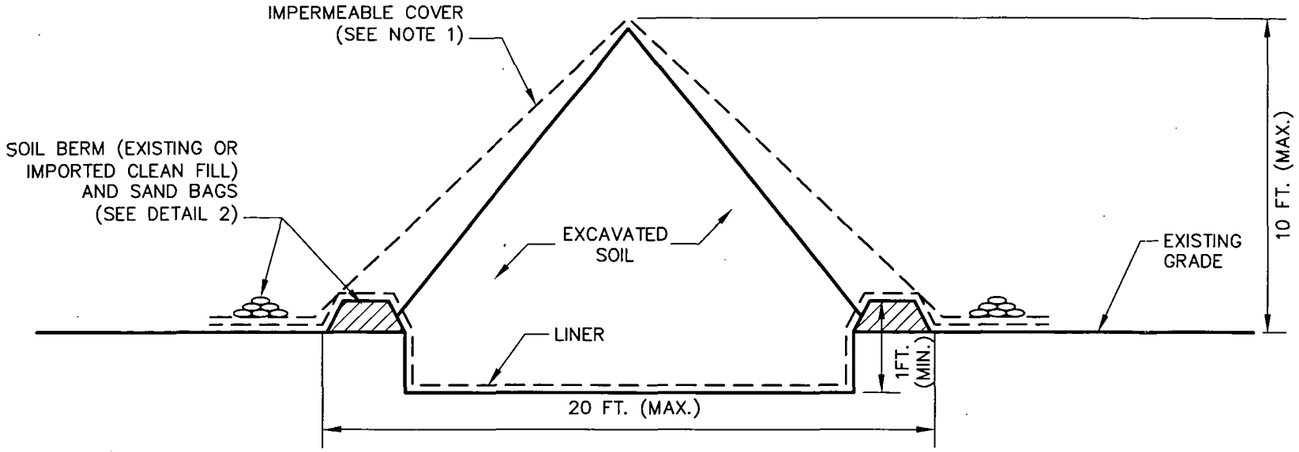

A 2-7 **TYPICAL SOIL REMEDIATION PILE - CROSS SECTION A-A'**

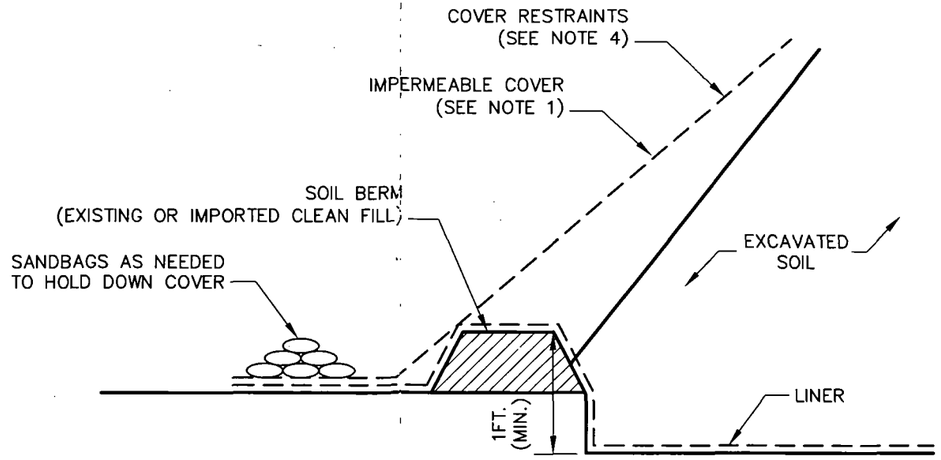

2 2-7 **BERM DETAIL**

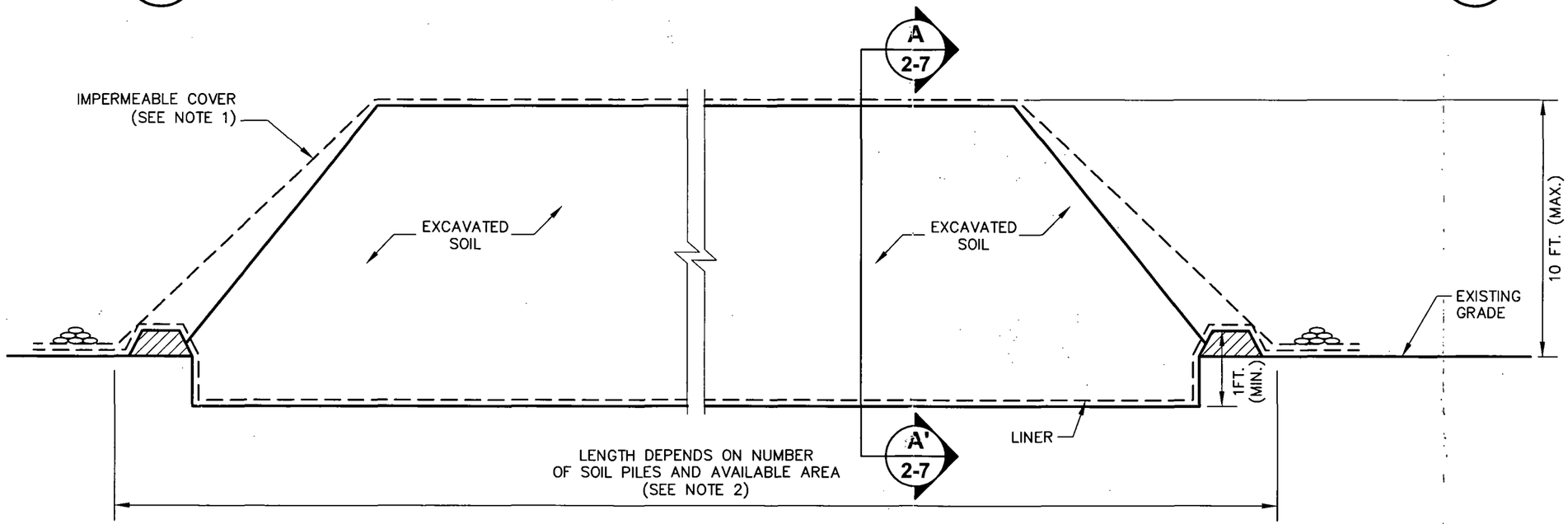

1 2-7 **TYPICAL SOIL REMEDIATION PILE - SIDE VIEW**

NOTES

1.) CONTRACTOR SHALL KEEP AN IMPERMEABLE COVER ON THE EXCAVATED SOIL IN THE SOIL PILES AT ALL TIMES WHEN EXCAVATION ACTIVITIES ARE INACTIVE AND/OR WHEN CONTRACTOR IS NOT ON-SITE.

2.) CONTRACTOR SHALL DETERMINE THE LOCATION AND NUMBER OF SOIL STOCKPILES TO BE CONSTRUCTED, AND SHALL FOLLOW THE MINIMUM DESIGN REQUIREMENTS SHOWN IN THIS FIGURE AND DESIGN REPORT.

3.) SCRAPE BACK SOILS TO MAKE BERM THEN REPLACE.

4.) CONTRACTOR SHALL USE METHOD OF SECURING IMPEREABLE COVER TO PREVENT, TIRES, NETTING, ROPES OR COMBINATION.

Golder Associates
Philadelphia USA

FILE No.	0036000M019
PROJECT No.	003-6000 REV. 0
SCALE	N.T.S.
DATE	06/17/04
DESIGN	DNB
CADD	AM
CHECK	SDG
REVIEW	BJE

TITLE

TYPICAL SOIL REMEDIATION PILE

MALVERN TCE SUPERFUND SITE

FIGURE 2-7

Drawing file: 0036000M019.dwg Jun 17, 2004 - 1:03pm

SDMS US EPA Region III

Imagery Insert Form

Site Name & OU: Malvern TCE **Document ID:** 2125916

Site DSN: PA-0322 **Site Status:** NPL **Releasability:** REL

Some images in this document may be illegible or unavailable in SDMS. Please see reason(s) indicated below:

☐ ILLEGIBLE due to bad source documents. Images(s) in SDMS equivalent to hard copy.

Specify Type of Document(s) / Comments:

☐ Includes ____ COLOR or ____ RESOLUTION variations. Unless otherwise noted, these pages are available in monochrome. The source document page(s) is more legible than the images. The original document is available for viewing at the Superfund Records Center.

Specify Type of Document(s) / Comments:

☐ RESTRICTED CONFIDENTIAL BUSINESS INFORMATION (CBI-R):
Restricted and or copyrighted documents that cannot be imaged.

Specify Type of Document(s) / Comments:

☒ UNSCANNABLE MATERIAL:
X Oversized or ___ Format. Due to certain scanning equipment capability limitations, the document page(s) is not available in SDMS. The original document is available for viewing at the EPA Region 3 Superfund Records Center.

Specify Type of Document(s) / Comments:

Oversized Site Maps, Figures 2-8 through 2-11

☑ Document is available at the EPA Region 3 Superfund Records Center.

Specify Type of Document(s) / Comments:

4.008, 8A

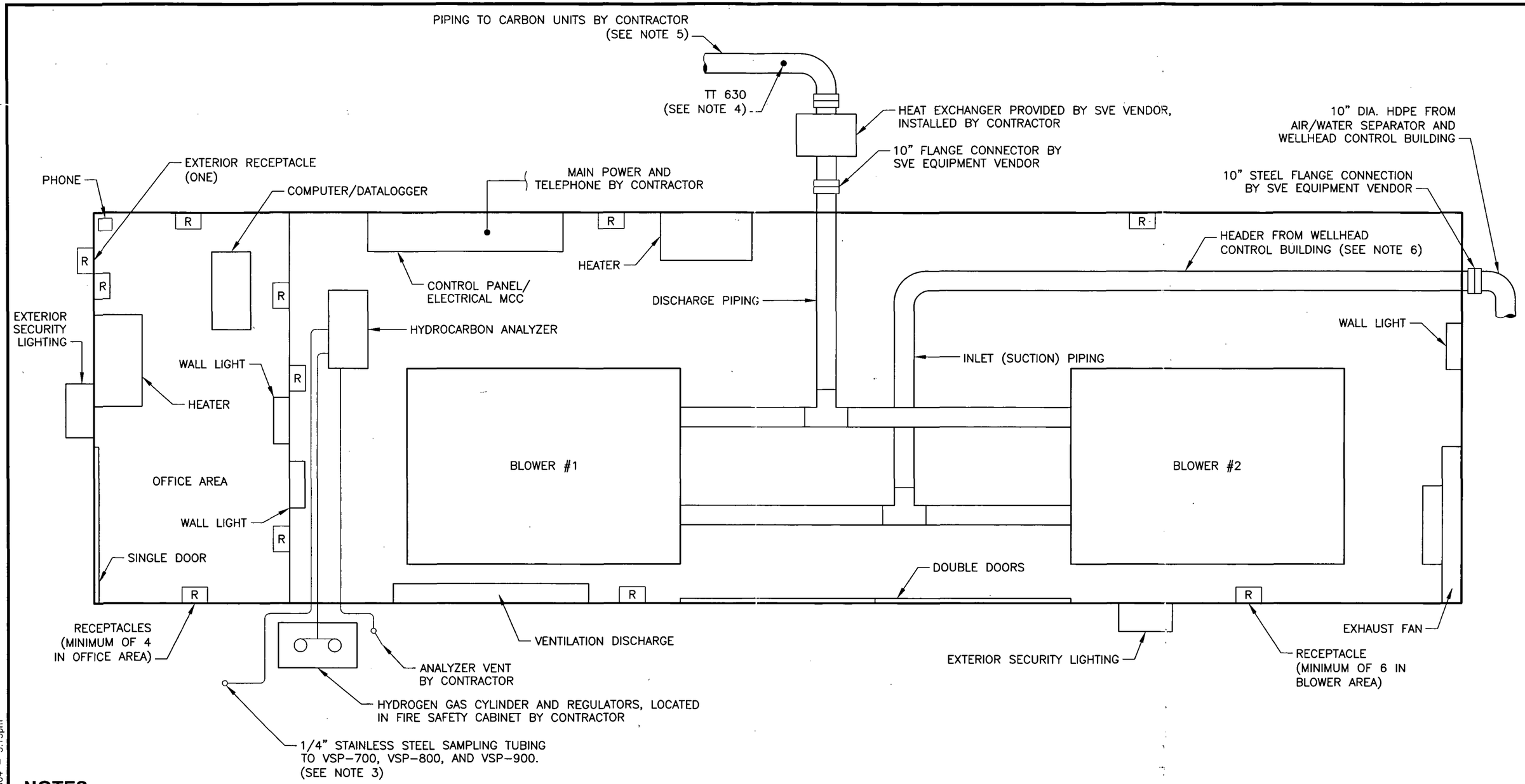

NOTES

1.) ACTUAL LAYOUT OF BLOWER BUILDING MAY BE DIFFERENT THAN SHOWN. REQUIREMENTS FOR EQUIPMENT CAN BE FOUND IN THE TECHNICAL SPECIFICATIONS.

2.) SEE PROCESS AND INSTRUMENTATION DIAGRAM FOR VALVE, INSTRUMENTATION, AND CONTROL REQUIREMENTS.

3.) CONTRACTOR SHALL PROVIDE AND INSTALL HYDROCARBON SAMPLE TUBING. TUBING SHALL BE HEAT TRACED AND INSULATED.

4.) TEMPERATURE TRANSMITTER (TT-630), AND ASSOCIATED WIRE SHALL BE PROVIDED BY SVE EQUIPMENT VENDOR. CONTRACTOR SHALL INSTALL.

5.) CONTRACTOR SHALL INSTALL ALL PIPE AND SUPPORTS REQUIRED TO CONNECT TO THE CARBON UNITS.

6.) CONTRACTOR SHALL INSULATE ALL HDPE PIPING LESS THAN 3 FT. BELOW GRADE.

REV	DATE	DES	REVISION DESCRIPTION	CADD	CHK	RVW

PROJECT
CHEMCLENE SITE DEFENSE GROUP
MALVERN TCE SUPERFUND SITE
EAST WHITELAND TOWNSHIP, PENNSYLVANIA

TITLE
BLOWER BUILDING LAYOUT

Golder Associates
Philadelphia USA

PROJECT No.		003-6000	FILE No.	0036000M025
DESIGN	DNB	01/15/03	SCALE N.T.S.	REV. 0
CADD	RG	06/17/04		
CHECK	SDG	06/17/04		
REVIEW	BJE	06/17/04		

FIGURE 2-12

Drawing file: 0036000M025.dwg Jun 16, 2004 - 5:13pm

GENERAL EQUIPMENT

- MOTOR
- FLEX COUPLER (REDUCER/ENLARGER)
- QUICK CONNECT COUPLING
- SAMPLING PORT
- FLEX HOSE
- CONDENSATE PUMP
- BLOWER

LINE TYPES

- PRIMARY PROCESS LINE
- FUTURE/EXISTING LINE
- ELECTRICAL LINE
- PACKAGE/SYSTEM LIMITS
- PLC/DCS LOGIC LOOP
- COMPRESSED AIR LINE
- DIRECTION OF FLOW
- CHEMICAL/WATER
- ENTRY AND EXIT FLOW

INSTRUMENTATION ABBREVIATIONS

B	BLOWER	PAL	PRESSURE ALARM LOW
FAL	FLOW ALARM LOW	PG	PRESSURE GAUGE
FI	FLOW INDICATOR	PAH	PRESSURE ALARM HIGH
FI(T)	FLOW INDICATOR (TRANSMITTER)	PIT	PRESSURE INDICATING TRANSMITTER
FP	FLOW PORT	PRV	PRESSURE REGULATING/RELIEF VALVE
FSP	FLOW AND SAMPLE PORT	PT	PRESSURE TRANSMITTER
FT	FLOW TRANSMITTER	PVC	POLYVINYL CHLORIDE
FY	FLOW INTERFACE POINT (PLC)	PY	PRESSURE INTERFACE POINT (PLC)
GS	GALVANIZED STEEL	SG	SIGHT GAUGE
HAH	HYDROCARBON ALARM HIGH	SP	SAMPLE PORT
HDPE	HIGH DENSITY POLYETHYLENE	T	TANK
HO	HAND-OFF SWITCH	TAH	TEMPERATURE ALARM HIGH
HOA	HAND-OFF-AUTOMATIC SWITCH	TI	TEMPERATURE INDICATOR
HIT	TOTAL HYDROCARBON INDICATING TRANSMITTER	TIC	TEMPERATURE INDICATING CONTROLLER
HY	TOTAL HYDROCARBON INTERFACE POINT (PLC)	TIT	TEMPERATURE INDICATING TRANSMITTER
I	SYSTEM SHUTDOWN INTERLOCK	TT	TEMPERATURE TRANSMITTER
LAH	LEVEL ALARM HIGH	TY	TEMPERATURE INTERFACE POINT (PLC)
LAHH	LEVEL ALARM HIGH-HIGH	V	VALVE
LSH	LEVEL SWITCH HIGH	VFD	VARIABLE FREQUENCY DRIVE
LSHH	LEVEL SWITCH HIGH-HIGH	VFDC	VARIABLE FREQUENCY DRIVE CONTROLLER
LSL	LEVEL SWITCH LOW	VRV	VACUUM REGULATING/RELIEF VALVE
N.C.	NORMALLY CLOSED (DE-ENERGIZED POSITION)	VSP	VAPOR SAMPLE PORT
N.O.	NORMALLY OPEN (DE-ENERGIZED POSITION)	YIG	EVENT INDICATOR GREEN
P	PUMP	YIR	EVENT INDICATOR YELLOW

VALVES

- GATE VALVE
- BALL VALVE
- GLOBE VALVE
- BUTTERFLY VALVE
- CHECK VALVE
- BACK FLOW PREVENTER
- ECCENTRIC PLUG VALVE
- BALL CHECK VALVE
- SIPHON BREAK/VACUUM RELIEF
- PRESSURE REGULATING VALVE
- SAFETY RELIEF VALVE
- MOTORIZED VALVE ACTUATOR
- U.L./F.M. APPROVED GAS SAFETY VALVE
- SOLENOID VALVE
- THREE WAY SOLENOID VALVE
- PULSE COUNTER

PIPING SYMBOLS

- STRAINER
- THREADED OR WELDED CONNECTION
- FLANGED CONNECTION
- REDUCER
- XXX-XX"-XX — PIPE INFORMATION
- XXX-XX"-XX — INDICATES FLUID
- XXX-XX"-XX — INDICATES PIPE NOMINAL DIAMETER
- XXX-XX"-XX — INDICATES MATERIAL OF CONSTRUCTION

INSTRUMENTS

- XXX / ### — FIELD/SKID MOUNTED INSTRUMENT
- XXX / ### — BEHIND THE PANEL DEVICES
- XXX / ### — PANEL MOUNTED INSTRUMENT, PRIMARY LOCATION (OU-2 PANEL)
- XXX / ### — PANEL MOUNTED INSTRUMENT, REMOTE OR AUXILIARY LOCATION (PACKAGE SYSTEMS)
- XXX / ### — PANEL LIGHT, PRIMARY LOCATION (OU-2 PANEL)
- XXX / ### — PANEL MOUNTED LIGHT, REMOTE OR AUXILIARY LOCATION (PACKAGE SYSTEMS)
- XXX / ### — PLC INPUT/FUNCTION
  - X — RTU DESIGNATION
- TM, XXX / ### — COMPUTER SCREEN DISPLAY/FUNCTION WITH EXISTING ALARM DIALER AND FIRST OUT DETECTOR INTERFACE (TM) AT OU-1.
  - X — RTU DESIGNATION
- XXX / ### — COMPUTER FUNCTION OR OPERATOR INTERFACE AT EXISTING PC COMPUTER TERMINAL.
- XXX — ABBREVIATIONS
- ### — INSTRUMENT NUMBER
- IN-LINE FLOW METER
- I — LOCAL INTERLOCK (HARD WIRED OR PLC LOGIC CONTROLLED)
- I — LOGIC CONTROLLED INTERLOCK (OU-1 MASTER PLC)

REV	DATE	DES	REVISION DESCRIPTION	CADD	CHK	RVW

PROJECT

CHEMCLENE SITE DEFENSE GROUP
MALVERN TCE SUPERFUND SITE
EAST WHITELAND TOWNSHIP, PENNSYLVANIA

TITLE

PROCESS AND INSTRUMENT DIAGRAM SYMBOLS AND ABBREVIATIONS

Golder Associates
Philadelphia USA

PROJECT No.		003-6000	FILE No.		0036000M017
DESIGN	DNB	01/15/03	SCALE	N.T.S.	REV. 0
CADD	AM	06/17/04			
CHECK	SDG	06/17/04			
REVIEW	BJE	06/17/04			

FIGURE 2-13

Drawing file: 0036000M017.dwg Jun 16, 2004 - 5:12pm

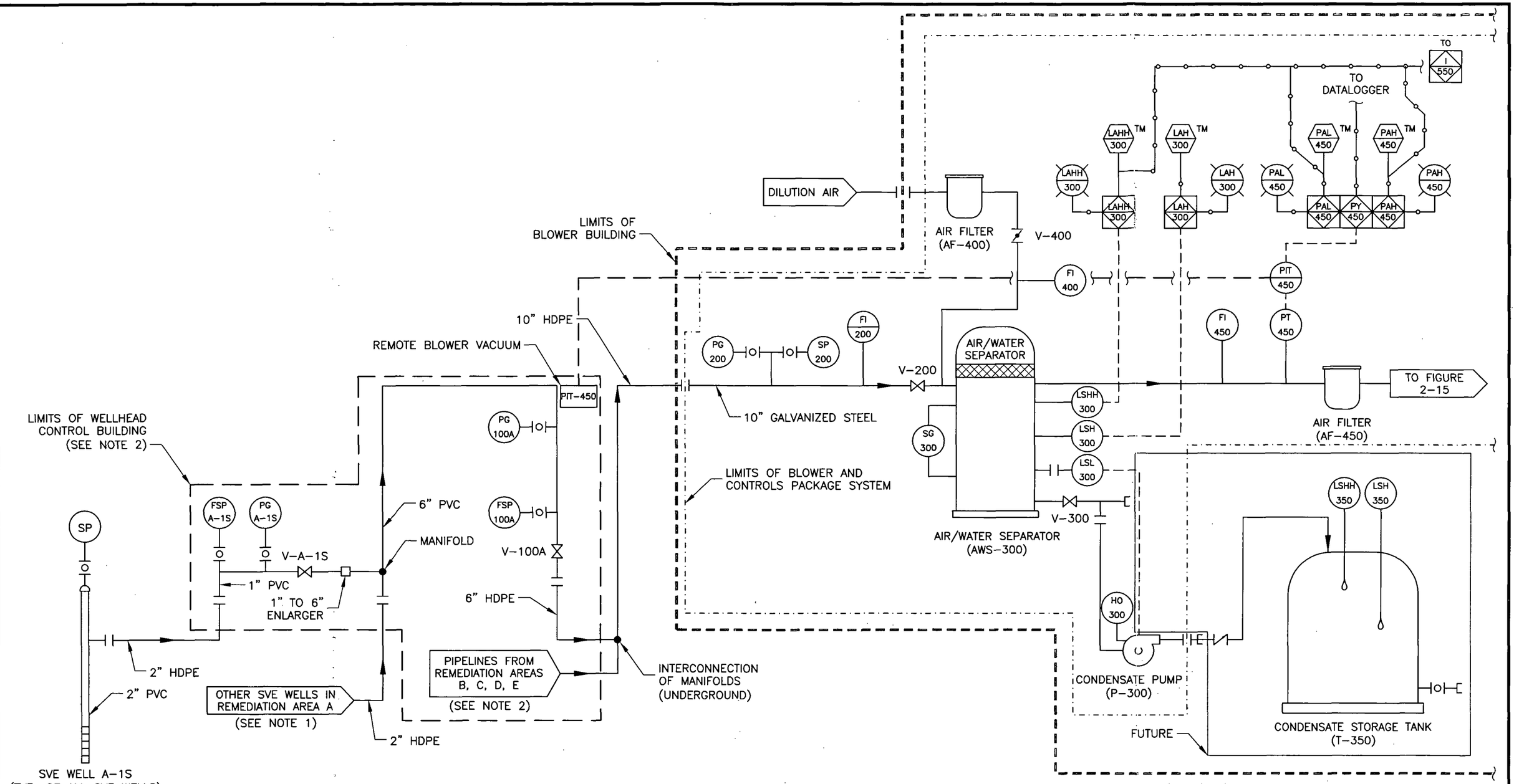

NOTES

1.) OTHER SVE WELLS IN REMEDIATION AREA A SHALL HAVE SEPARATE PIPELINES FROM THE WELL TO THE MANIFOLD INSIDE THE WELLHEAD CONTROL BUILDING, CONSTRUCTED WITH IDENTICAL MATERIALS FOR PIPES AND FITTINGS, AND IDENTICAL INSTRUMENTATION AND CONTROLS, AS SHOWN FOR SVE WELL A-1S.

2.) EACH REMEDIATION AREA SHALL HAVE A MANIFOLD FOR ALL SVE WELLS IN THAT AREA. CONTROLS AND INSTRUMENTATION FOR THE MANIFOLD FOR REMEDIATION AREAS B, C, D, AND E SHALL BE SIMILAR TO REMEDIATION AREA A AS SHOWN ABOVE.

3.) SEE FIGURE 2-13 FOR SYMBOLS AND ABBREVIATIONS USED IN THIS FIGURE.

REV	DATE	DES	REVISION DESCRIPTION	CADD	CHK	RVW

PROJECT
CHEMCLENE SITE DEFENSE GROUP
MALVERN TCE SUPERFUND SITE
EAST WHITELAND TOWNSHIP, PENNSYLVANIA

TITLE
PROCESS AND INSTRUMENTATION DIAGRAM (SHEET 1 OF 2)

Golder Associates
Philadelphia USA

PROJECT No.		003-6000	FILE No.	0036000M003	
DESIGN	DNB	01/14/03	SCALE	N.T.S.	REV. 0
CADD	AM	06/17/04			
CHECK	SDG	06/17/04			
REVIEW	BJE	06/17/04			

FIGURE 2-14

Drawing file: 0036000M003.dwg Jun 17, 2004 - 10:53am

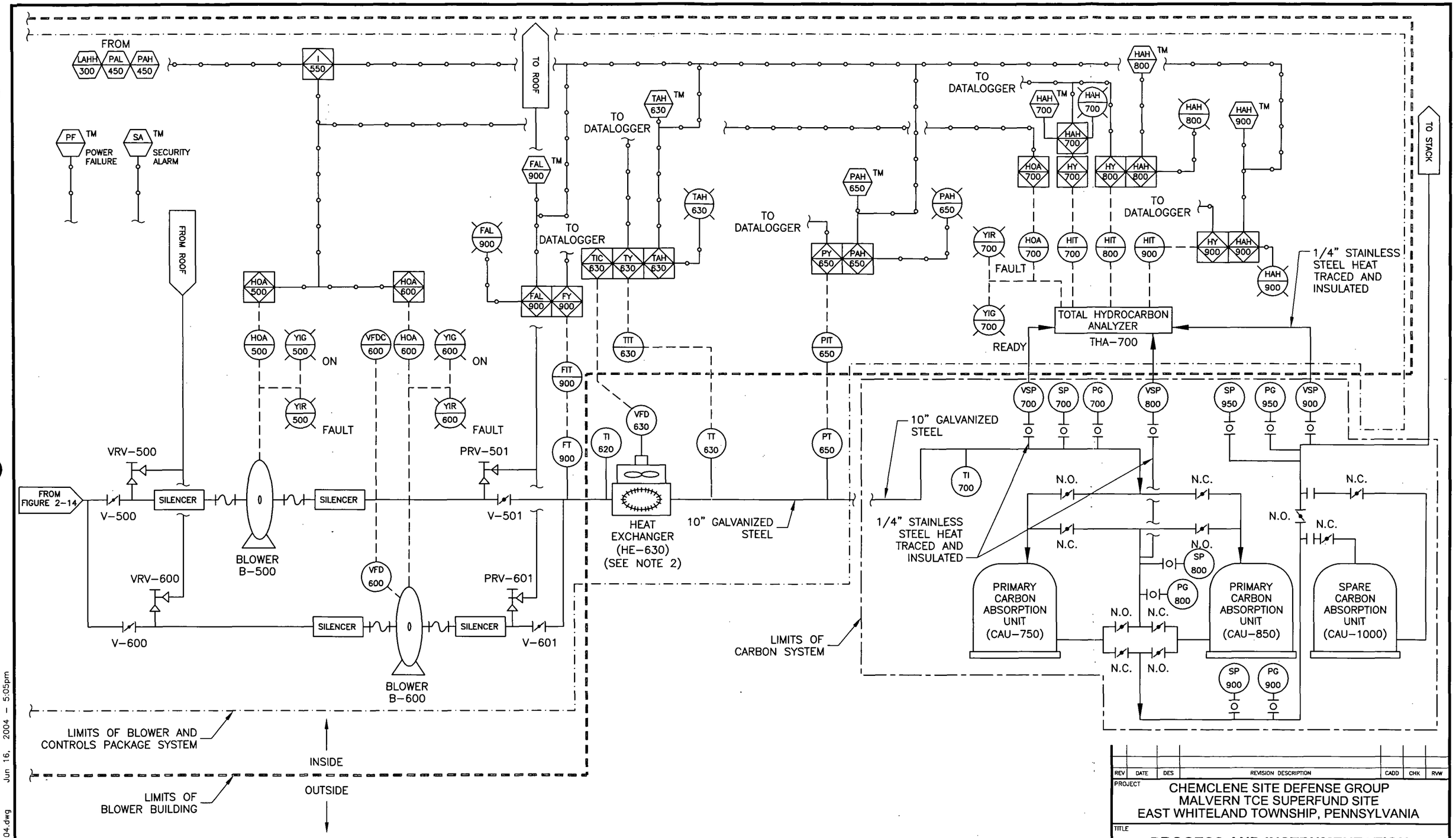

NOTES

1.) SEE FIGURE 2-13 FOR SYMBOLS AND ABBREVIATIONS USED IN THIS FIGURE.

2.) HEAT EXCHANGER, HE-630, AND TEMPERATURE TRANSMITTER, TT-630, PROVIDED BY SVE EQUIPMENT VENDOR AND INSTALLED BY CONTRACTOR.

REV	DATE	DES	REVISION DESCRIPTION	CADD	CHK	RVW

PROJECT
CHEMCLENE SITE DEFENSE GROUP
MALVERN TCE SUPERFUND SITE
EAST WHITELAND TOWNSHIP, PENNSYLVANIA

TITLE
PROCESS AND INSTRUMENTATION DIAGRAM (SHEET 2 OF 2)

Golder Associates
Philadelphia USA

PROJECT No.		003-6000	FILE No.	0036000M004
DESIGN	DNB	01/14/03	SCALE	N.T.S. REV. 0
CADD	AM	06/17/04		
CHECK	SDG	06/17/04		
REVIEW	BJE	06/17/04		

FIGURE 2-15

Drawing file: 0036000M004.dwg Jun 16, 2004 - 5:05pm

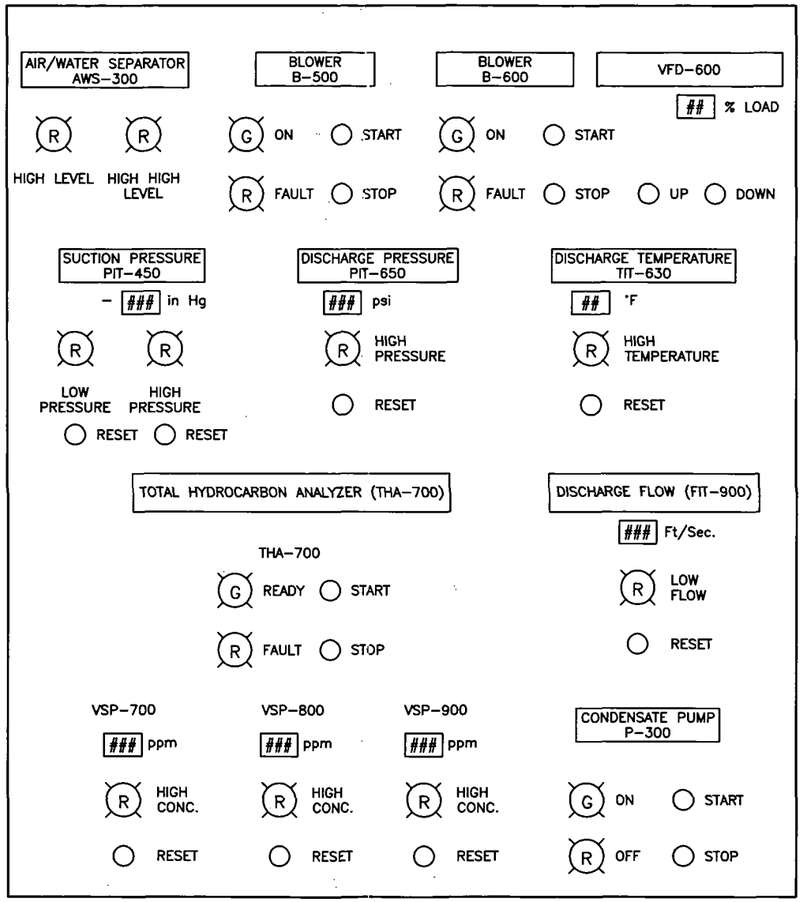

LIGHT R=RED, G=GREEN

PUSHBUTTON

DIGITAL DISPLAY

NOTES

1.) PANEL SHOWN ILLUSTRATES MINIMUM PANEL REQUIREMENTS.

2.) CONTRACTOR SHALL SUBMIT PROPOSED PANEL LAYOUT FOR REVIEW PER CONTRACT DOCUMENTS.

Golder Associates
Philadelphia USA

FILE No.	0036000M009
PROJECT No.	003-6000
REV.	0

SCALE	AS SHOWN
DATE	06/17/04
DESIGN	DNB
CADD	AM
CHECK	SDG
REVIEW	BJE

TITLE

CONTROL PANEL LAYOUT

MALVERN TCE SUPERFUND SITE

FIGURE 2-16

Drawing file: 0036000M009.dwg Jun 17, 2004 - 11:00am

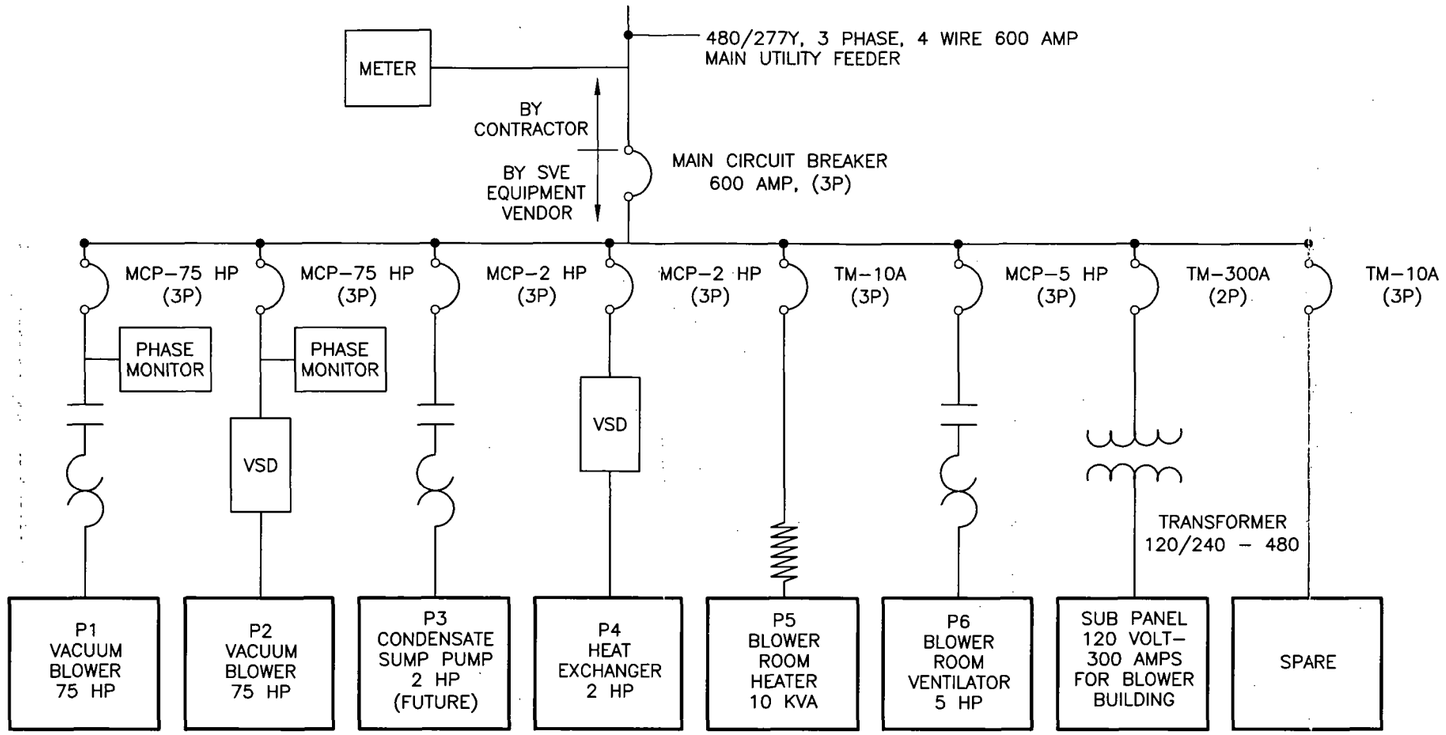

WELLHEAD CONTROL BUILDING (SEE NOTE 2)

RECEPTACLES	20 AMPS
RECEPTACLES	20 AMPS
LIGHTING	20 AMPS
LIGHTING	20 AMPS
LIGHTING OUTDOOR – SECURITY	20 AMPS
HEATER	50 AMPS

VENTILATOR	20 AMPS
EXTERIOR RECEPTACLES	20 AMPS
SPARE	20 AMPS
SPARE	20 AMPS
SPARE	20 AMPS
SPARE	20 AMPS

BLOWER BUILDING

RECEPTACLES CONTROL ROOM	20 AMPS
EXTERIOR RECEPTACLES CARBON AREA	20 AMPS
MAIN CONTROL PANEL	20 AMPS
LIGHTING BLOWER ROOM	20 AMPS
LIGHTING CONTROL ROOM	15 AMPS
LIGHTING OUTDOOR – SECURITY (3)	15 AMPS
LIGHTING OUTDOOR – SECURITY (3)	15 AMPS
RECEPTACLE BLOWER ROOM	20 AMPS
HEAT TRACE (SEE NOTE 3)	20 AMPS
HYDROCARBON ANALYZER	15 AMPS

HEATER CONTROL ROOM	30 AMPS
BLOWER LUBE SYSTEM	30 AMPS
BLOWER LUBE SYSTEM	30 AMPS
AIR CONDITIONER/VENTILATOR CONTROL ROOM	30 AMPS
WELLHEAD CONTROL BLDG.	100 AMPS
SPARE	20 AMPS
SPARE	20 AMPS
SPARE	20 AMPS
SPARE	20 AMPS
SPARE	20 AMPS

NOTES

1.) UNLESS OTHERWISE NOTED ALL EQUIPMENT, WIRES, AND CONDUIT SHALL BE PROVIDED BY SVE EQUIPMENT VENDOR. THIS DRAWING INDICATES THE MINIMAL ELECTRICAL REQUIREMENTS. THE SVE EQUIPMENT VENDOR SHALL SUBMIT A FINAL SINGLE LINE DIAGRAM THAT INCLUDES WIRE, SIZES, AND CONDUIT.

2.) CONTRACTOR SHALL PROVIDE WIRING AND CONDUIT FROM BLOWER BUILDING TO WELLHEAD CONTROL BUILDING. CONTRACTOR SHALL PROVIDE 120 VOLT PANEL AND ALL EQUIPMENT, WIRE AND CONDUIT ASSOCIATED WITH THE WELLHEAD CONTROL BUILDING. SVE EQUIPMENT VENDOR SHALL PROVIDE WELLHEAD CONTROL BUILDING PANEL AND OTHER REQUIRED ITEMS. MCC DISCONNECT AND TRANFORMER AT BLOWER BUILDING.

3.) CONTRACTOR SHALL PROVIDE AND INSTALL EXTERIOR BLOWER BUILDING LIGHTING AND HEAT TRACE.

4.) CONTRACTOR SHALL INSTALL HEAT EXCHANGER PROVIDED BY SVE EQUIPMENT VENDOR. CONTRACTOR SHALL FURNISH ALL WIRE, CONDUIT AND OTHER MATERIALS.

REV	DATE	DES	REVISION DESCRIPTION	CADD	CHK	RVW

PROJECT

CHEMCLENE SITE DEFENSE GROUP
MALVERN TCE SUPERFUND SITE
EAST WHITELAND TOWNSHIP, PENNSYLVANIA

TITLE

SINGLE LINE ELECTRICAL DIAGRAM

Golder Associates
Philadelphia USA

PROJECT No.		003-6000	FILE No.		0036000M018
DESIGN	DNB	01/14/03	SCALE	N.T.S.	REV. 0
CADD	AM	06/17/04			
CHECK	SDG	06/17/04			
REVIEW	BJE	06/17/04			

FIGURE 2-17

Drawing file: 0036000M018.dwg Jun 17, 2004 – 11:00am

SDMS US EPA Region III

Imagery Insert Form

Site Name & OU: Malvern TCE **Document ID:** 2125916

Site DSN: PA-0322 **Site Status:** NPL **Releasability:** REL

Some images in this document may be illegible or unavailable in SDMS. Please see reason(s) indicated below:

☐ ILLEGIBLE due to bad source documents. Images(s) in SDMS equivalent to hard copy.

Specify Type of Document(s) / Comments:

☐ Includes ____ COLOR or ____ RESOLUTION variations. Unless otherwise noted, these pages are available in monochrome. The source document page(s) is more legible than the images. The original document is available for viewing at the Superfund Records Center.

Specify Type of Document(s) / Comments:

☐ RESTRICTED CONFIDENTIAL BUSINESS INFORMATION (CBI-R):
Restricted and or copyrighted documents that cannot be imaged.

Specify Type of Document(s) / Comments:

☒ UNSCANNABLE MATERIAL:
X Oversized or ___ Format. Due to certain scanning equipment capability limitations, the document page(s) is not available in SDMS. The original document is available for viewing at the EPA Region 3 Superfund Records Center.

Specify Type of Document(s) / Comments:

Oversized Site Maps, Figures 2-14 through 2-19

☑ Document is available at the EPA Region 3 Superfund Records Center.

Specify Type of Document(s) / Comments:

8.008, 8A

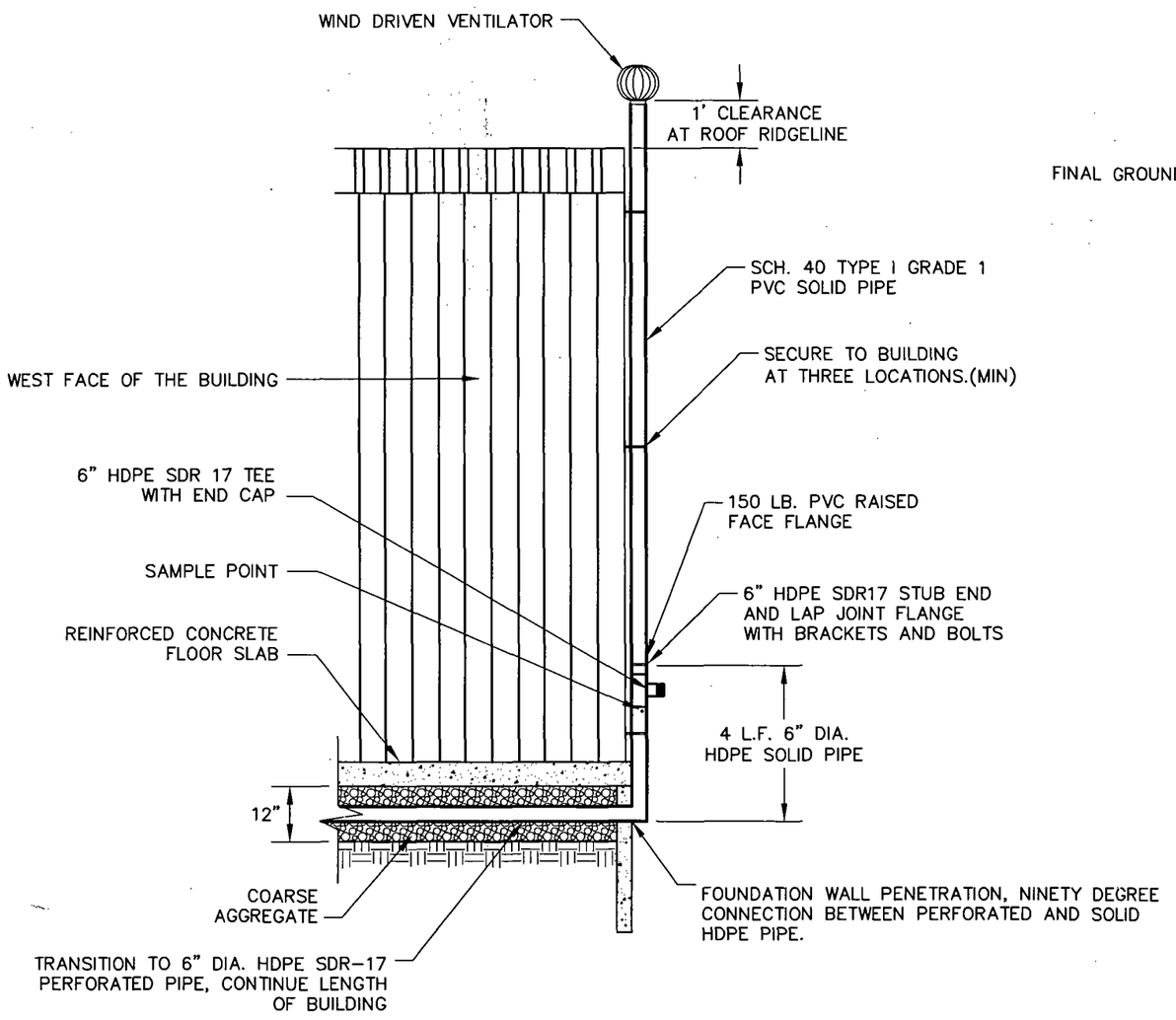

WELLHEAD CONTROL BUILDING FOUNDATION VENT DETAIL

1 / 2-20

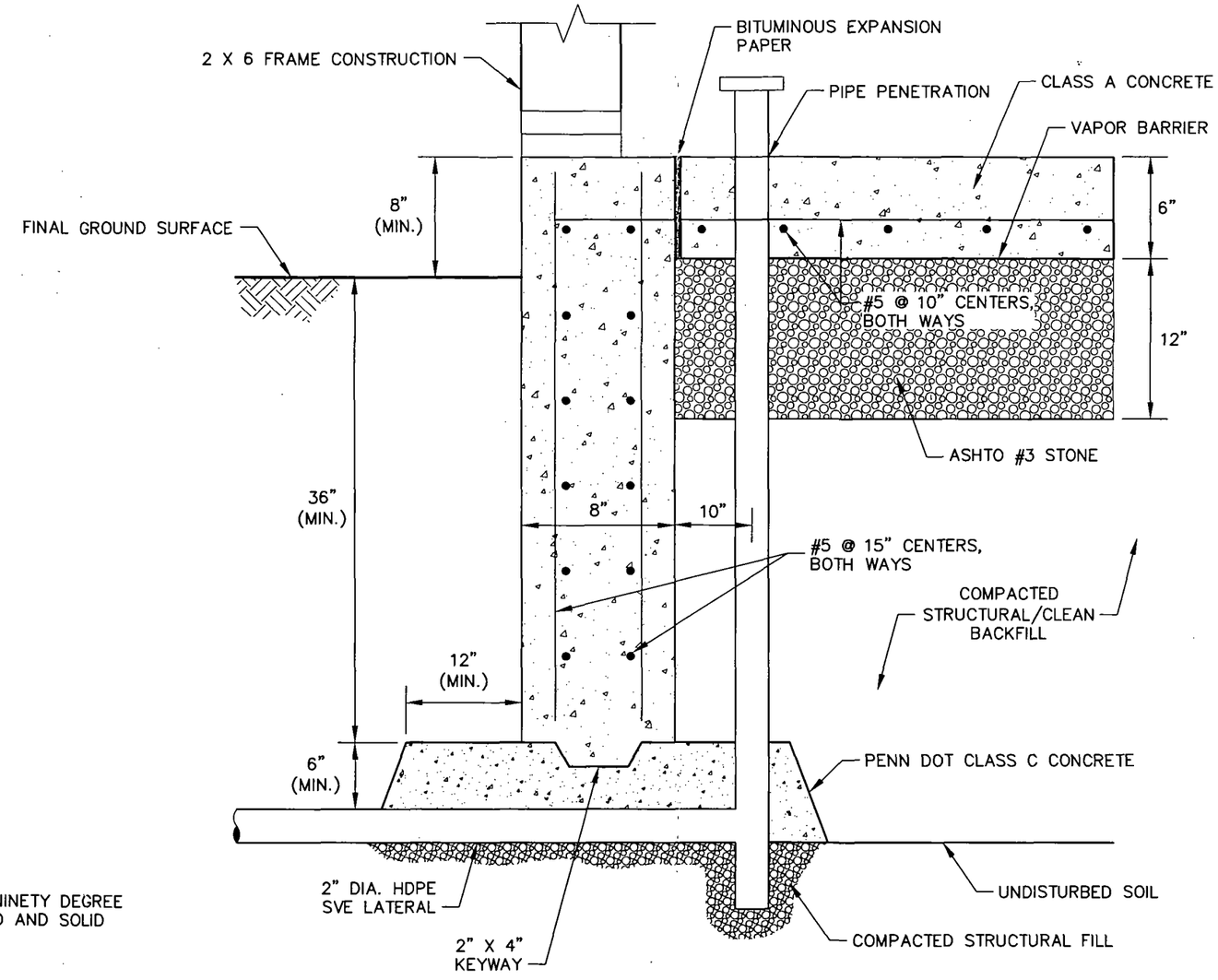

WELLHEAD CONTROL BUILDING FOUNDATION SECTION

2 / 2-20

REV	DATE	DES	REVISION DESCRIPTION	CADD	CHK	RVW

PROJECT
CHEMCLENE SITE DEFENSE GROUP
MALVERN TCE SUPERFUND SITE
EAST WHITELAND TOWNSHIP, PENNSYLVANIA

TITLE
WELLHEAD CONTROL BUILDING DETAILS (SHEET 3 OF 3)

Golder Associates
Philadelphia USA

PROJECT No.		003-6000	FILE No.		0036000M029
DESIGN	BJE	04/13/04	SCALE	N.T.S.	REV. 0
CADD	RDG	06/17/04			
CHECK	SDG	06/17/04			
REVIEW	BJE	06/17/04			

FIGURE 2-20

Drawing file: 0036000M029.DWG Jun 16, 2004 - 5:32pm

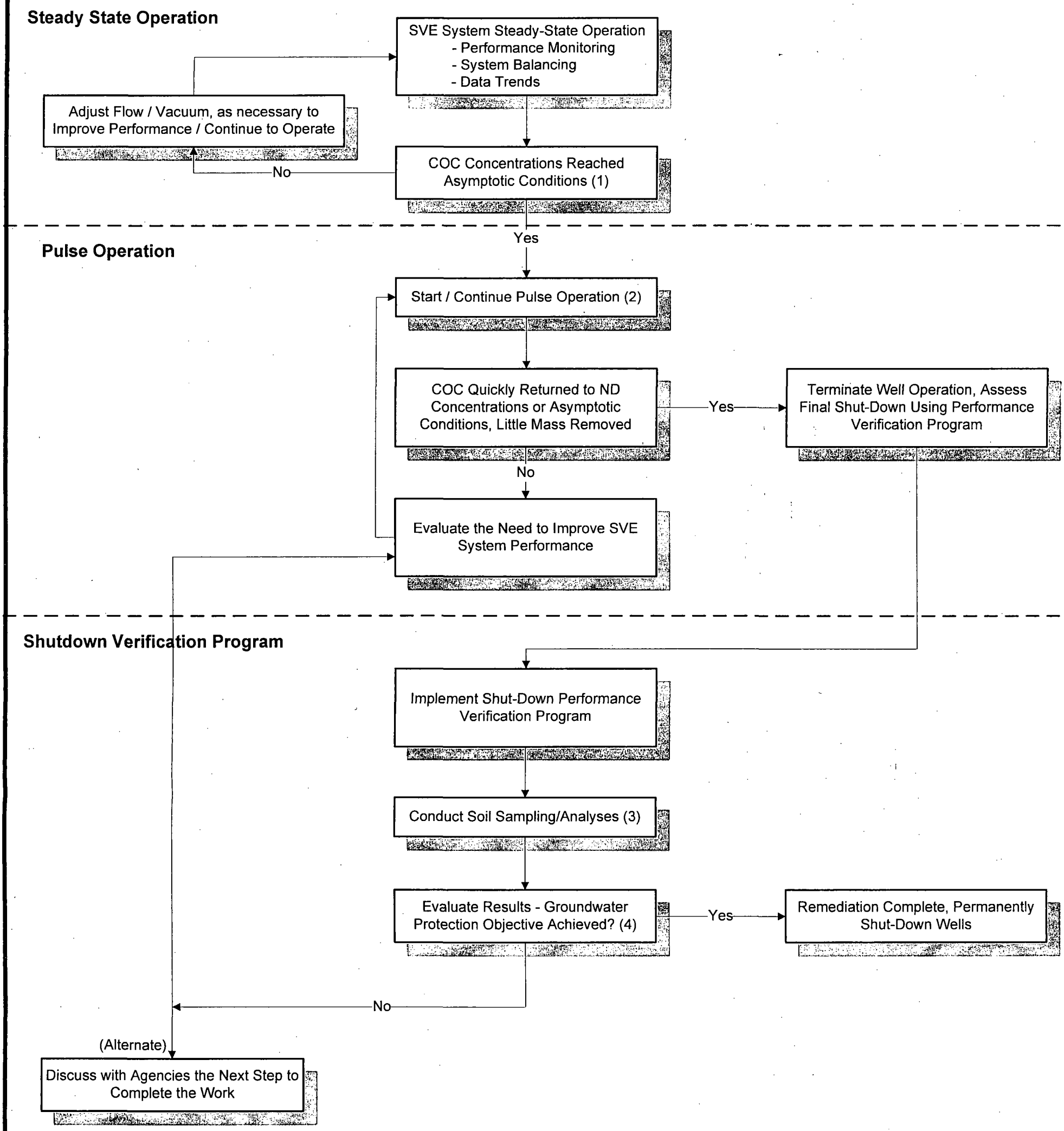

1. Asymptotic conditions exist where compound of concern (COC) concentrations become diffusion limited and the rate of COC mass removal asymptotically levels off to a point where any additional COC mass removal is negligible as compared to the energy expenditure needed to continue operation of SVE well. Asymptotic conditions will vary between wells.

2. Pulse Operation (specific procedure may vary for individual wells depending on monitoring results and conditions):

   - adjust length of temporary shut-down period, monitoring frequency and duration of re-start operation as appropriate for individual wells;
   - adjust well operation (flow rate/vacuum) as appropriate;
   - conducted at least once per well; and,
   - possibly pulse multiple times depending on monitoring results.

3. Final shut-down performance monitoring will be conducted by collecting and analyzing subsurface soil samples for COCs versus full VOC suite initially from locations exhibiting higher COC concentrations (5 borings; one from each remediation area; 3 samples per boring). The analytical results from the samples from each remediation area, or site-wide, will be averaged to develop a conservative concentration of the anticipated worst-case COC remaining in the soil column.

4. As stated in the ROD, the overall objective for remediation of the FDA/MA soils is protection of groundwater. A final evaluation of whether concentrations of COCs impact groundwater will be required if, following verification sampling, the soil concentrations exceed ROD SCS.

JOB No.:	003-6000	SCALE:	Not to Scale	**SVE Shutdown Strategy Malvern TCE Superfund Site**
DR BY:	LRL	DATE:	6/17/04	
CHK BY:	LRL	FILE No.:	flowchart.vsd	
REV BY:	BJE	DIRECTORY	003-6000/90%/Figures	
Golder Associates		**Pre-Final Design Report**		FIGURE: **2-21**

FIGURE 3-1
GROUNDWATER ELEVATION vs TIME IN FDA/MA WELLS
90 % DESIGN REPORT
MALVERN TCE SUPERFUND SITE

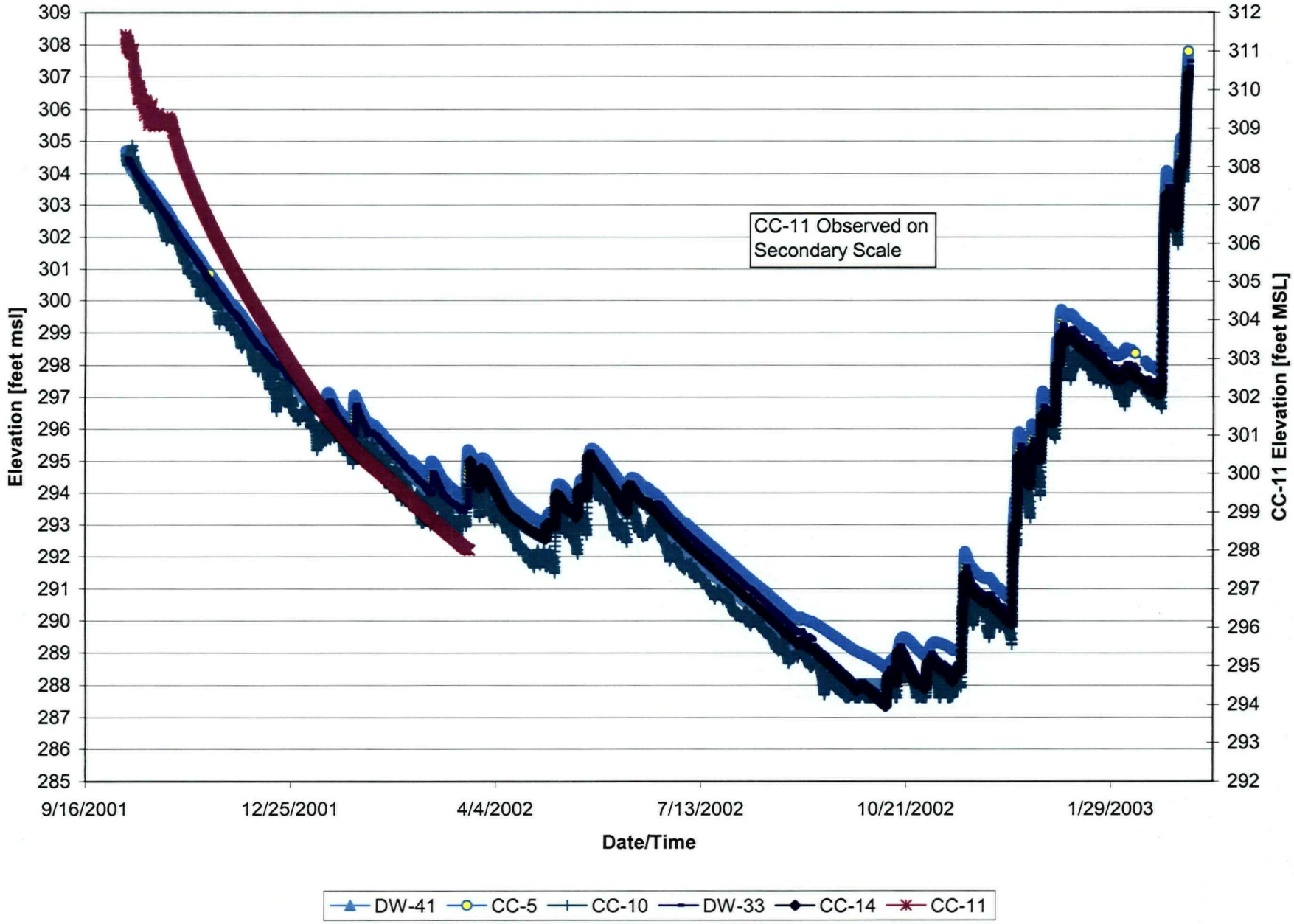

NOTES

1.) WELL DW-69 WILL BE MONITORED FOR GEOCHEMICAL PARAMETERS ON A QUARTERLY BASIS FOR THE FIRST YEAR OF MONITORING. THEREAFTER, THIS WELL MAY BE USED FOR HYDRAULIC MONITORING PURPOSES ONLY, DEPENDING ON THE YEAR ONE SAMPLE RESULTS.

2.) FINAL LOCATION OF WELL CC-11R SHALL BE DETERMINED IN FIELD BY ENGINEER.

REFERENCE

1.) TOPOGRAPHIC FEATURES TAKEN FROM CADD FILE "MALVERN.DWG" DATED 05/24/96, SUPPLIED TO de maximus, inc. BY USEPA IN MARCH 2000, EXCEPT AS NOTED BELOW.

2.) TOPOGRAPHIC FEATURES INSIDE THE LIMIT OF PRE-DESIGN INVESTIGATION SURVEY AREA TAKEN FROM CADD FILE "S0101(2000)" DATED 10/31/01 SUPPLIED BY PENNONI ASSOCIATES, MODIFIED BY GOLDER ASSOCIATES ON 04/10/02.

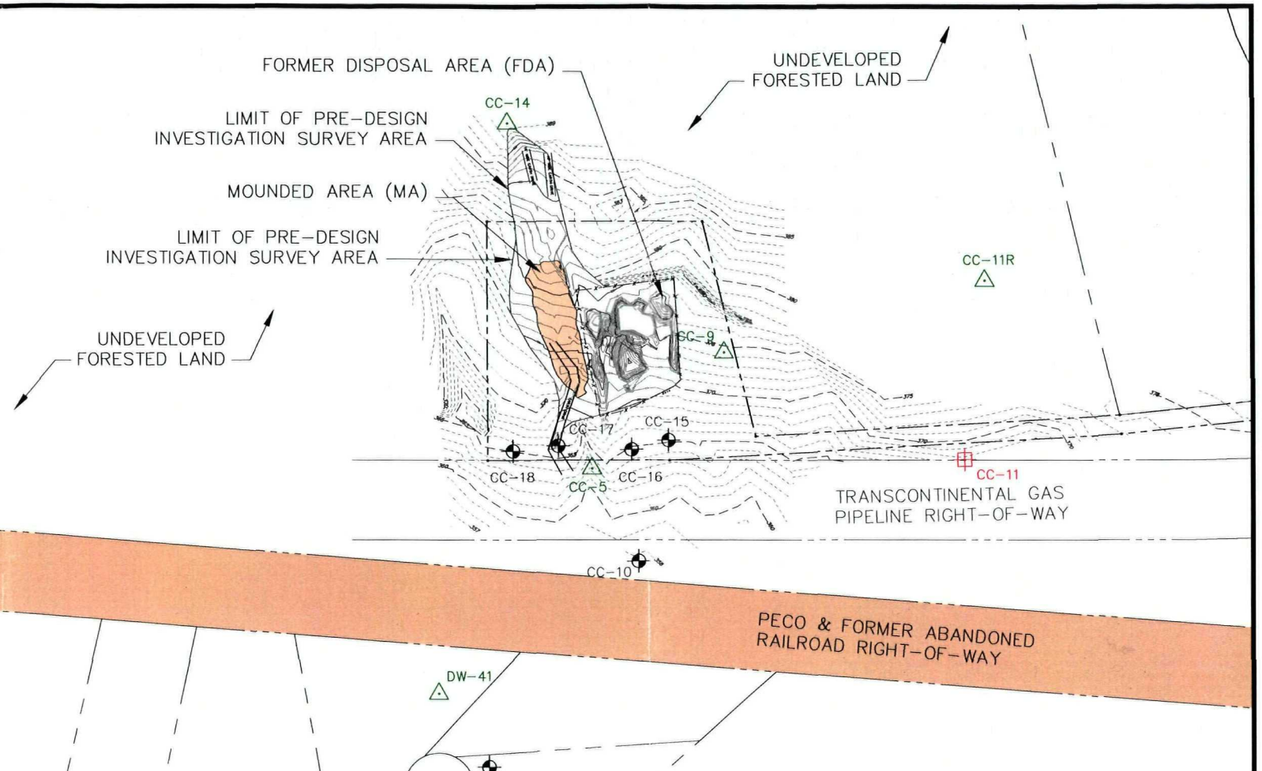

LEGEND

- CC-14 — EXISTING MONITORING WELL
- CC-9 — GEOCHEMICAL/HYDRAULIC CHARACTERIZATION MONITORING WELL
- CC-11 — MONITORING WELL PROPOSED FOR DECOMMISIONING
- SITE BOUNDARY
- CHAIN LINK SECURITY FENCE
- OUTLINE OF GAS PIPELINE RIGHT-OF-WAY AS SHOWN IN REMEDIAL INVESTIGATION

200 0 200
SCALE FEET

REV	DATE	DES	REVISION DESCRIPTION	CADD	CHK	RVW

PROJECT
CHEMCLENE SITE DEFENSE GROUP
MALVERN TCE SUPERFUND SITE
EAST WHITELAND TOWNSHIP, PENNSYLVANIA

TITLE
MNA WELL LAYOUT

Golder Associates Philadelphia USA

PROJECT No.		003-6000	FILE No.		0036000M015
DESIGN	DSL	11/18/03	SCALE	AS SHOWN	REV. 0
CADD	AM	06/17/04			
CHECK	DSL	06/17/04			
REVIEW	BJE	06/17/04			

FIGURE 3-2

Drawing file: 0036000M015.dwg Jun 17, 2004 - 8:05am

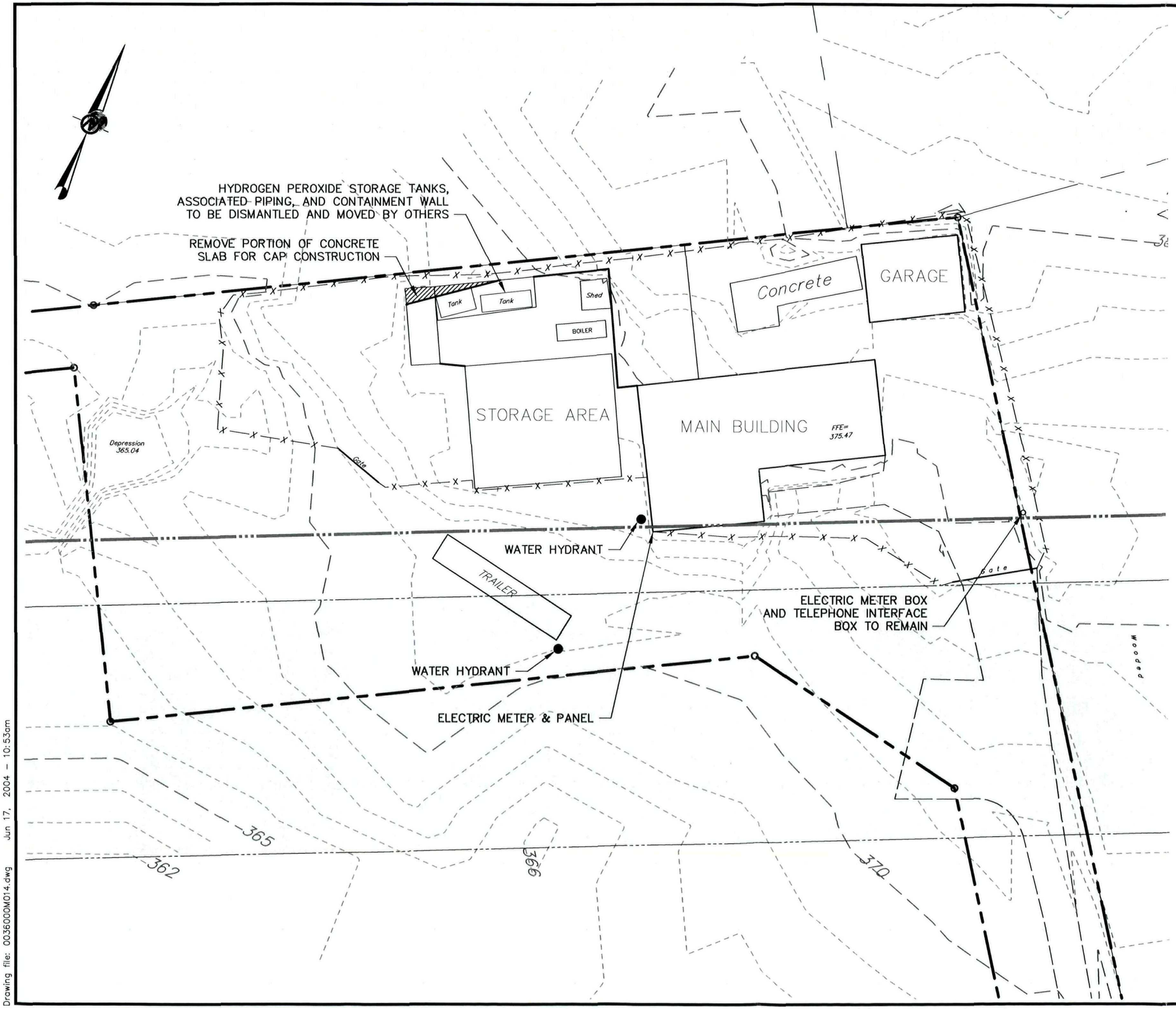

LEGEND

- EXISTING FENCE SURROUNDING MPA PORTION OF PROPERTY (TO BE REMOVED)
- EXISTING GRAVEL/PAVED ROADWAY
- APPROXIMATE OUTLINE OF MPA AS DEFINED IN RI
- PIPELINE RIGHT-OF-WAY AS SHOWN IN REMEDIAL INVESTIGATION
- NORTHERN EXTENT OF RIGHT-OF-WAY OBSERVED IN THE FIELD

NOTES

1.) LOCATIONS OF ALL RI BORINGS AND SURFACE SOIL SAMPLES ARE APPROXIMATE.

2.) CONTRACTOR SHALL REMOVE AND DISPOSE OF ALL EQUIPMENT, BUILDING DEMOLITION DEBRIS, BUILDING MATERIALS, DRUMS, TANKS, VESSELS, TOTES, GAS CYLINDERS, ELECTRICAL DEVICES, TRAILERS, FENCING, BOATS, AND VEHICLES.

3.) STRUCTURES SHALL BE DEMOLISHED TO BELOW CAP LINER SUBGRADE ELEVATION. CONCRETE AND MASONRY SHALL BE DISPOSED OFF SITE.

4.) ELECTRIC SERVICE SHALL BE DE-ENERGIZED AT STREET CONNECTION. ALL WIRING SHALL BE GROUNDED PRIOR TO DEMOLITION. WATER LINES SHALL BE CUT AND CAPPED AT SITE BOUNDARIES.

5.) CONTRATOR SHALL EMPTY AND CLEAN TANKS, TOTES, DRUMS, AND OTHER CONTAINERS AS REQUIRED FOR TRANSPORTATION AND OFF SITE DISPOSAL.

6.) ALL DEBRIS IS CONSIDERED RCRA CLEAN. ALL MATERIAL SHALL BE FIELD SCREENED BY PID UNIT, PRIOR TO REMOVAL.

7.) CONTRACTOR SHALL CHARACTERIZE AND PROPERLY DISPOSE OF LIQUIDS AND SLUDGES.

8.) ALL REMAINING UNDERGROUND PIPES, CONDUITS, OR DRAINS, SHALL BE SEALED.

REFERENCE

1.) TOPOGRAPHIC FEATURES TAKEN FROM CADD FILE "MALVERN.DWG" DATED 05/24/96, SUPPLIED TO DE MAXIMIS, INC. BY USEPA IN MARCH 2000.

40 0 40
SCALE FEET

REV	DATE	DES	REVISION DESCRIPTION	CADD	CHK	RVW

PROJECT
CHEMCLENE SITE DEFENSE GROUP
MALVERN TCE SUPERFUND SITE
EAST WHITELAND TOWNSHIP, PENNSYLVANIA

TITLE
EXISTING CONDITIONS AND DEMOLITION PLAN

Golder Associates
Philadelphia USA

PROJECT No.		003-6000	FILE No.		0036000M014
DESIGN	SDG	05/20/04	SCALE	AS SHOWN	REV. 0
CADD	RDG	06/17/04			
CHECK	SDG	06/17/04			
REVIEW	BJE	06/17/04			

FIGURE 4-1

Drawing file: 0036000M014.dwg Jun 17, 2004 - 10:53am

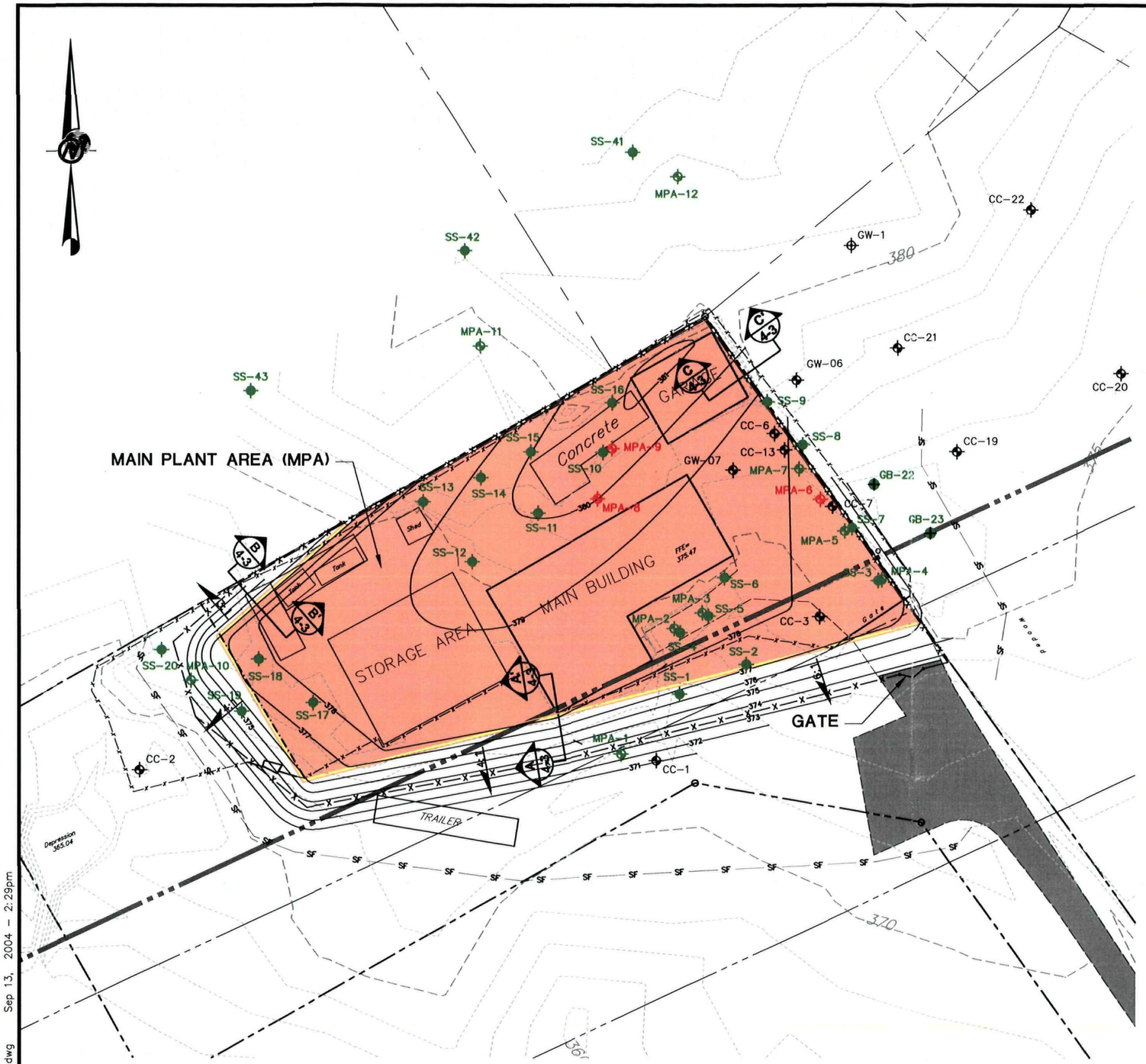

LEGEND

- GW-3 — MONITORING WELL (INSTALLED DURING PRE-DESIGN INVESTIGATION)
- CC-14 — MONITORING WELL (INSTALLED PRIOR TO PRE-DESIGN INVESTIGATION) (SEE NOTE 4)
- RI SOIL BORING LOCATIONS – BELOW ROD SCS
- RI SOIL BORING LOCATIONS – ABOVE ROD SCS
- RI SURFACE SOIL SAMPLE LOCATIONS – BELOW ROD SCS
- PDI SUB-SURFACE SOIL BORING LOCATIONS – BELOW ROD SCS
- SITE BOUNDARY
- COVER LIMIT LINE AS PRESENTED IN USEPA APPROVED RDWP
- PROPOSED CHAIN LINK SECURITY FENCE
- EXISTING CHAIN LINK SECURITY FENCE
- OUTLINE OF GAS PIPELINE RIGHT-OF-WAY AS SHOWN IN REMEDIAL INVESTIGATION
- APPROXIMATE NORTHERN EXTENT OF GAS PIPELINE RIGHT-OF-WAY OBSERVED DURING PRE-DESIGN INVESTIGATION
- EXISTING GRADES
- SF — SILT FENCE
- AREA OF PROPOSED CAP
- ACCESS ROAD
- TOE DRAIN

NOTE

1.) MONITORING WELLS CC-3, CC-6, CC-7, CC-13, AND GW-07 TO BE RAISED ABOVE FINAL GRADES.

50 0 50
SCALE FEET

REFERENCES

1.) TOPOGRAPHIC FEATURES TAKEN FROM CADD FILE "MALVERN.DWG" DATED 05/24/96, SUPPLIED TO de maximus, inc. BY USEPA IN MARCH 2000, EXCEPT AS NOTED BELOW.

2.) TOPOGRAPHIC FEATURES INSIDE THE LIMIT OF PRE-DESIGN INVESTIGATION SURVEY AREA TAKEN FROM CADD FILE "S0101(2000)" DATED 10/31/01 SUPPLIED BY PENNONI ASSOCIATES, MODIFIED BY GOLDER ASSOCIATES ON 04/10/02.

REV	DATE	DES	REVISION DESCRIPTION	CADD	CHK	RVW

PROJECT
CHEMCLENE SITE DEFENSE GROUP
MALVERN TCE SUPERFUND SITE
EAST WHITELAND TOWNSHIP, PENNSYLVANIA

TITLE
PROPOSED MPA FINAL GRADE AND LAYOUT

Golder Associates
Philadelphia USA

PROJECT No.		003-6000	FILE No.		0036000P002
DESIGN	DSL	09/10/04	SCALE	AS SHOWN	REV. 0
CADD	MJS	09/10/04			
CHECK	DSL	09/13/04			
REVIEW	BJE	09/13/04			

FIGURE 4-2

Drawing file: 0036000P002.dwg Sep 13, 2004 - 2:29pm

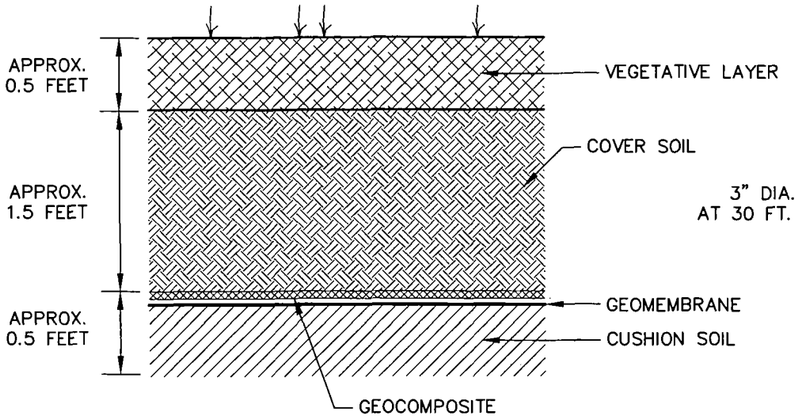

1 / 4-3 CAP CROSS SECTION
NOT TO SCALE

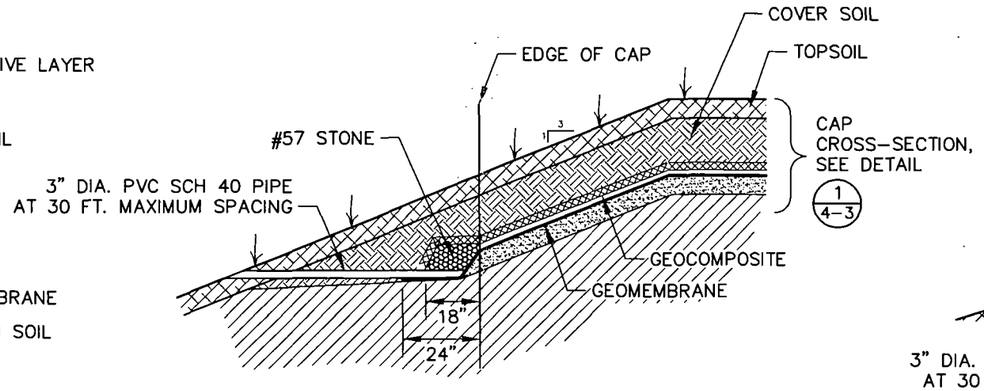

A / 4-3 SECTION A-A'
NOT TO SCALE

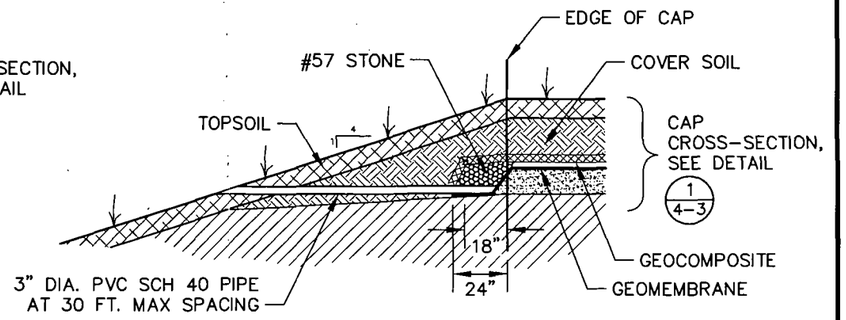

B / 4-3 SECTION B-B'
NOT TO SCALE

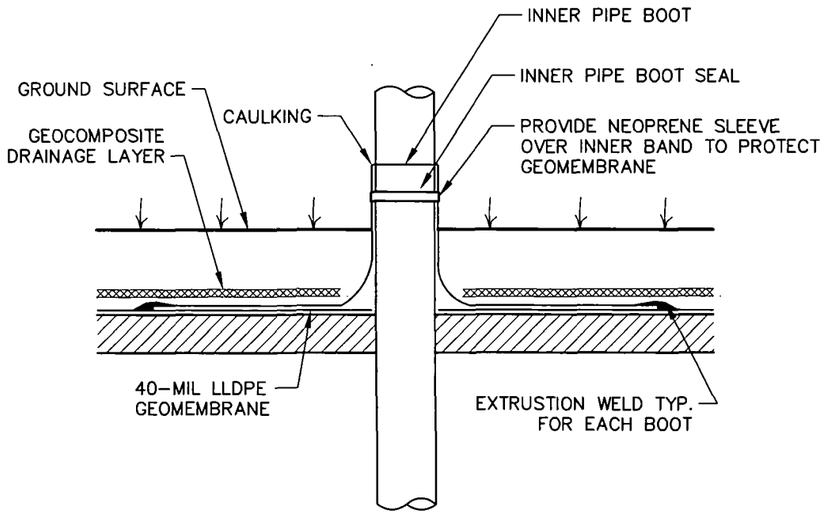

4 / 4-3 WELL CASING / PENETRATION DETAIL
NOT TO SCALE

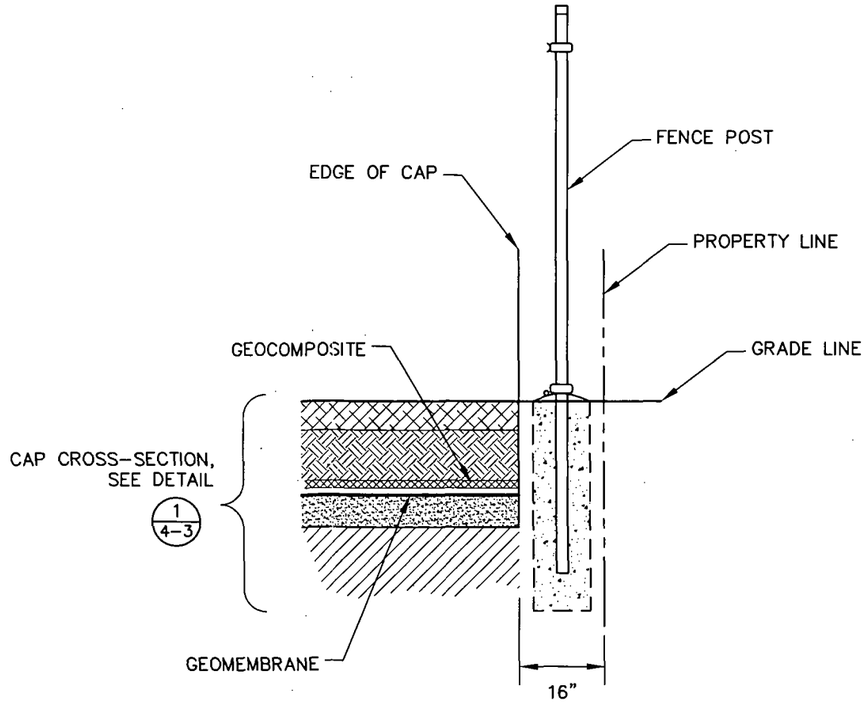

C / 4-3 CAP EDGE AT PROPERTY LINE
NOT TO SCALE

REV	DATE	DES	REVISION DESCRIPTION	CADD	CHK	RVW

PROJECT
CHEMCLENE SITE DEFENSE GROUP
MALVERN TCE SUPERFUND SITE
EAST WHITELAND TOWNSHIP, PENNSYLVANIA

TITLE
MPA DETAILS (SHEET 1 OF 2)

Golder Associates
Philadelphia USA

PROJECT No.		003-6000	FILE No.		0036000M011
DESIGN	SDG	05/20/04	SCALE	AS SHOWN	REV. 0
CADD	AM	06/17/04			
CHECK	SDG	06/17/04			
REVIEW	BJE	06/17/04			

FIGURE 4-3

Drawing file: 0036000M011.dwg Jun 16, 2004 - 5:38pm

SDMS US EPA Region III

Imagery Insert Form

Site Name & OU: Malvern TCE **Document ID:** 2125916

Site DSN: PA 0322 **Site Status:** NPL **Releasability:** REL

Some images in this document may be illegible or unavailable in SDMS. Please see reason(s) indicated below:

☐ ILLEGIBLE due to bad source documents. Images(s) in SDMS equivalent to hard copy.

Specify Type of Document(s) / Comments:

☐ Includes ____ COLOR or ____ RESOLUTION variations. Unless otherwise noted, these pages are available in monochrome. The source document page(s) is more legible than the images. The original document is available for viewing at the Superfund Records Center.

Specify Type of Document(s) / Comments:

☐ RESTRICTED CONFIDENTIAL BUSINESS INFORMATION (CBI-R):
Restricted and or copyrighted documents that cannot be imaged.

Specify Type of Document(s) / Comments:

☒ UNSCANNABLE MATERIAL:
X Oversized or ___ Format. Due to certain scanning equipment capability limitations, the document page(s) is not available in SDMS. The original document is available for viewing at the EPA Region 3 Superfund Records Center.

Specify Type of Document(s) / Comments:

Oversized Site Maps, Figure 4-4

☑ Document is available at the EPA Region 3 Superfund Records Center.

Specify Type of Document(s) / Comments:

8.006, 8A

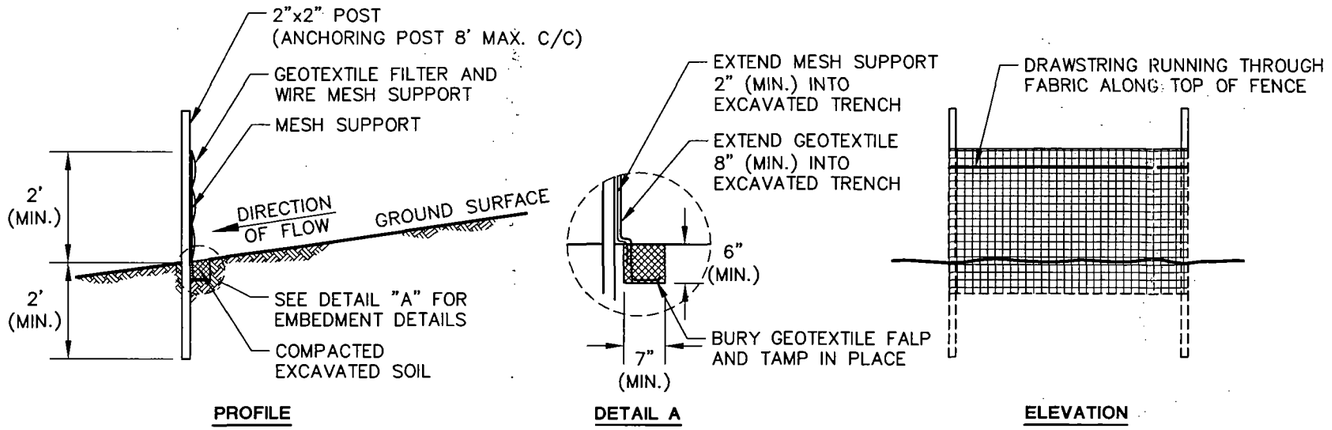

NOTES FOR SILT FENCE DETAIL

1.) WOVEN WIRE FENCE TO BE FASTENED SECURELY TO FENCE POSTS WITH HEAVY DUTY WIRE STAPLES AT LEAST 1" LONG, TIE WIRES OR HOG RINGS.

2.) SILT FENCE GEOTEXTILE TO BE FASTENED SECURELY TO WOVEN WIRE FENCE WITH TIES AND REINFORCEMENT BETWEEN FASTENER AND FABRIC, SPACED EVERY 24", OR AT TOP AND MID-SECTION.

3.) FILTER FABRIC FENCE MUST BE PLACED AT LEVEL EXISTING GRADE.

4.) SEDIMENT MUST BE REMOVED WHEN ACCUMULATIONS REACH 1/2 THE ABOVE GROUND HEIGHT OF THE FENCE.

5.) THE FABRIC SHALL INCORPORATE A DRAWSTRING IN THE TOP PORTION OF THE FENCE FOR ADDED STRENGTH.

POSTS: HARDWOOD WITH A MINIMUM DIAMETER OF 1.5"

FENCE: WOVEN WIRE MESH WITH MAXIMUM 6" OPENINGS

GEOTEXTILE: FILTER X, MIRAFI 100X, STABILINKA T140N OR ENGINEER APPROVED EQUAL

PREFABRICATED UNIT: GEOFAB, ENVIROFENCE, OR ENGINEER APPROVED EQUAL

1 / 4-5 SILT FENCE DETAIL

NOT TO SCALE

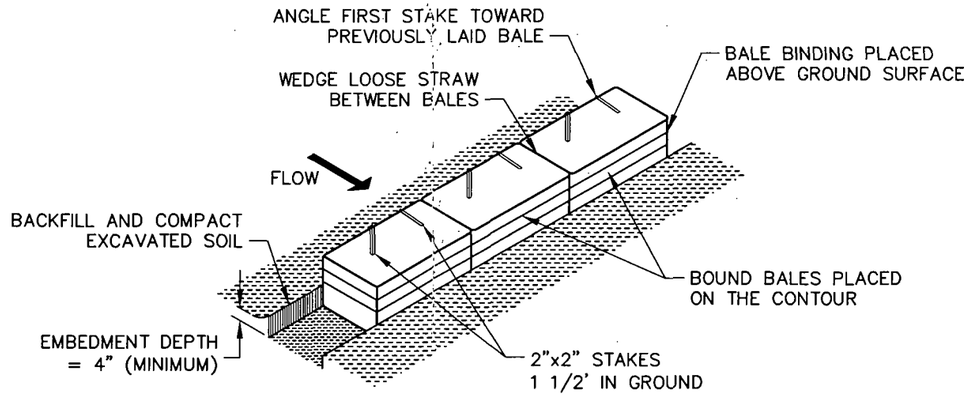

2 / 4-5 STRAW BALE

NOT TO SCALE

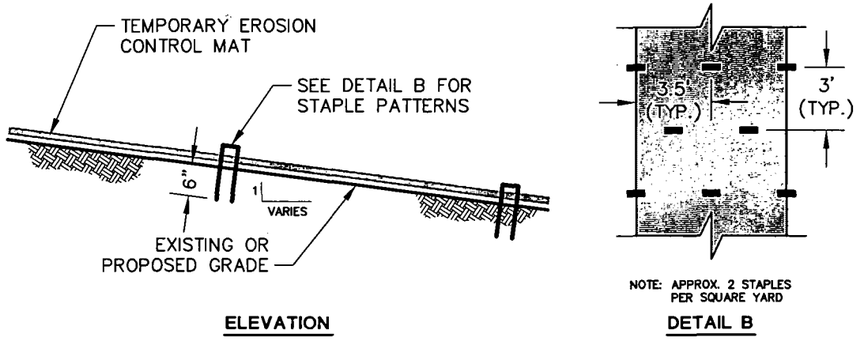

3 / 4-5 EROSION CONTROL MAT STAPLES LAYOUT

NOT TO SCALE

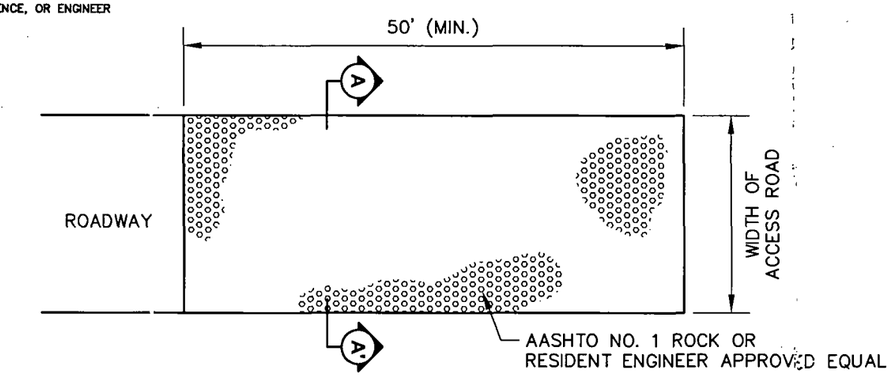

PLAN VIEW

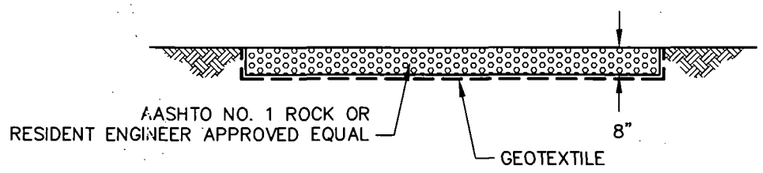

NOTE: CONTRACTOR SHALL PROVIDE APPROPRIATE TRANSITION BETWEEN STABILIZED CONSTRUCTION ENTRANCE AND PUBLIC RIGHT OF WAY

SECTION A-A'

4 / 4-5 TEMPORARY ROCK CONSTRUCTION ENTRANCE

NOT TO SCALE

REV	DATE	DES	REVISION DESCRIPTION	CADD	CHK	RVW

PROJECT

CHEMCLENE SITE DEFENSE GROUP
MALVERN TCE SUPERFUND SITE
EAST WHITELAND TOWNSHIP, PENNSYLVANIA

TITLE

EROSION & SEDIMENTATION CONTROL DETAILS

Golder Associates
Philadelphia USA

PROJECT No.		003-6000	FILE No.		0036000M012
DESIGN	SDG	11/17/03	SCALE	AS SHOWN	REV. 0
CADD	AM	06/17/04			
CHECK	SDG	06/17/04			
REVIEW	BJE	06/17/04			

FIGURE 4-5

Drawing file: 0036000M012.dwg Jun 17, 2004 - 11:49am

FIGURE 7-1
PROJECTED DESIGN AND RAC CONTRACTING SCHEDULE
100% DESIGN REPORT
MALVERN TCE SUPERFUND SITE

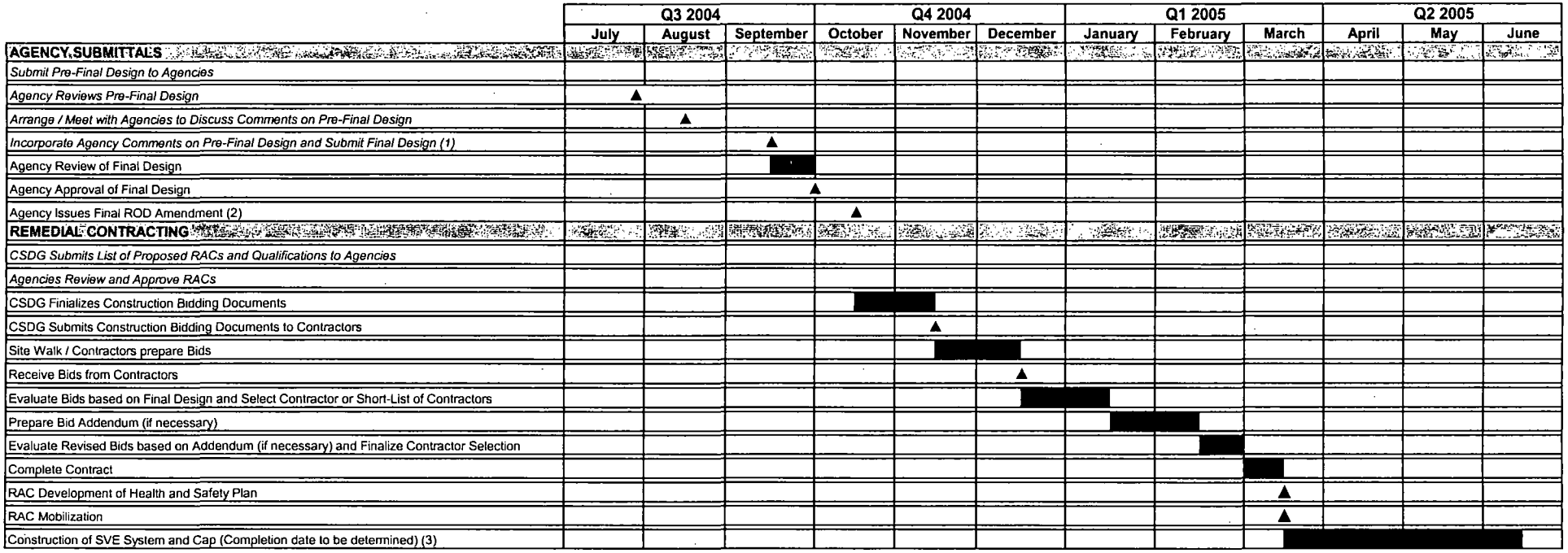

(1) Assumes only minor Agency comments on Pre-Final Design need to be addressed as part of the Final Design.

(2) The projected schedule beyond this point is contingent upon the issuance of the Final ROD Amendment.

(3) The anticipated schedule for construction is dependant on RA Contractor mobilization. Construction duration may be adversely impacted by weather, etc.

FIGURE 7-2
PROJECTED SCHEDULE OF ACCELERATED IN-SITU GROUNDWATER BIOREMEDIATION PILOT TEST AND DESIGN OF MPA GROUNDWATER REMEDIAL COMPONENT (1)
90% DESIGN REPORT
MALVERN TCE SUPERFUND SITE

Subtask Name	Q2 2003		Q3 2003			Q4 2003			Q1 2004			Q2 2004			Q3 2004			Q4 2004			Q1 2005			Q2 2005		
	May	June	July	August	Sept	Oct	Nov	Dec	Jan	Feb	Mar	April	May	June	July	August	Sept	Oct	Nov	Dec	Jan	Feb	Mar	April	May	June
STEP 1 - PILOT TEST INSTALLATION																										
Microcosm Study																										
STEP 2 - AQUIFER CONDITIONING																										
Initial Electron Donor Injection (Aquifer Conditioning)																										
Monitor Tracer (T) / Geochemical Conditions (G)									G	G	G															
STEP 3 - BIOAUGMENTATION																										
Bioaugmentation																										
STEP 4 - PILOT TEST ELECTRON DONOR INJECTION AND PERFORMANCE MONITORING																										
Electron Donor Injection (Pilot Test Operation)																										
Groundwater Monitoring Events - Screening Level Analyses (S) and Full QA/QC Analyses (F)										S	S	S	S	S	S	S	F	F								
Preparation of Pilot Test Report / Submittal to USEPA																										
Ongoing Operation of Bioremediation System (2)																										
USEPA Review Comments on Pilot Test Report																										
Response to USEPA Comments																										
USEPA Approves Pilot Test Report																										
Initiate Preliminary Design of MPA Groundwater Remedy Incorporating Accelerated In-Situ Bioremediation (3)																										

Note:

(1) The above is a projection of the anticipated schedule and sequence of tasks associated with the groundwater pilot test. Actual schedule of completion of certain tasks is dependent upon Agency review times, subcontractor availability, weather, etc. In addition, the duration of the pilot test is estimated and may vary depending on the results obtained during the test.

(2) Item will be conducted/refined based on the success of pilot study.

(3) A detailed schedule for the design of the groundwater remedy will be determined following USEPA approval of the Pilot Test Report.

APPENDIX A

FDA/MA SOIL REMEDIAL CALCULATIONS

APPENDIX A1

INITIAL MASS REMOVAL RATE AND VOC VAPOR CONCENTRATION ESTIMATES

APPENDIX A1
INITIAL MASS REMOVAL RATE AND VOC VAPOR CONCENTRATION ESTIMATES MALVERN TCE SUPERFUND SITE

A.1.0 PURPOSE AND BACKGROUND

To evaluate air permit equivalency requirements and provide vapor phase treatment design criteria, expected mass removal rates and vapor volatile organic compound (VOC) concentrations from the full-scale soil vapor extraction (SVE) area were estimated using the results of the SVE pilot study conducted in December 2001 and January 2002 and soil concentrations from samples collected during the Pre-Design Investigation (PDI). The pilot study included three types of SVE wells, shallow (SVE-1S), intermediate (SVE-1I), and deep (SVE-1D), each constructed with a 5-foot screen. The results of the pilot study indicated that during Mass Removal Test 1 (MR-1), which involved shallow well SVE-1S, a mass removal rate of approximately 18 pounds per day of VOCs was obtained at an average flow rate of 8 scfm. During Mass removal Test 2 (MR-2), which involved deep well SVE-1D, a mass removal rate of approximately 1 pound per day was obtained at an average flow rate of 7 scfm. A mass removal test was not conducted at intermediate well SVE-1I. However, during the Pneumatic response tests (PR1-shallow well & PR2-intermediate well), the total VOC concentration measured for the intermediate well (PR-2) was less than that measured from the shallow well by a factor of six. Therefore, it can be conservatively estimated that the mass removal rate from the intermediate well would have been one-sixth of the shallow well, or about 3 pounds per day at a flow rate of 8 scfm (the average flow rate for a shallow well). This estimate for the intermediate zone is considered conservative since the measured flow for the intermediate zone during the pneumatic response tests were 6.0 to 6.2 scfm.

As presented in Table A-1, results of soil borings surrounding the pilot test collected during Phase 1 and Phase 2 of the PDI and for the borehole of VP-5 made during the pilot study indicate that four compounds (tetrachloroethene (PCE), trichloroethene (TCE), 1,1,1-trichloroethane (1,1,1-TCA) and 1,1-dichloroethene (DCE)) are the major VOC constituents in the soil. As presented in Table A-3, vapor phase analyses conducted during the pilot study reported that these four compounds account for approximately 93% of the VOCs. Due to the low percentage of other compounds, VOC constituent specific mass rates and concentrations were estimated for these four compounds only.

A.2.0 CALCULATION METHODOLOGY

Mass emission rates from the pilot study can be used to estimate the expected emission from the full-scale system. Since the pilot study was conducted within a small area of the Site, it is necessary to correlate the pilot study results to estimate full-scale emissions.

A.2.1 Soil Concentration Factor (SCF)

The pilot study was conducted within the area measured to have the highest reported soil concentrations. Phase I/II boreholes GB-29 and GB2B2 and VP-5 are located near the pilot study area. Thirty-eight boreholes were sampled within the area of projected influence of full-scale SVE system, excluding boreholes located outside or non-detect boreholes at the edge of the projected influence. A soil concentration factor (SCF) was calculated using the average of total VOC concentration in soil at each borehole in the pilot study area and full-scale area as presented in Tables A-1 and A-2, respectively.

$$SCF = \frac{Average\ VOC\ concentration\ in\ soil\ in\ full\ scale\ area}{Average\ VOC\ concentration\ in\ soil\ in\ pilot\ scale\ area}$$

The SCF was found to be 0.093 (see attached calculations), which means the average air toxic concentration in the soil for the full-scale SVE area is approximately 10% of the average VOC concentration in the soil for the pilot study area.

A.2.2 Radius of Influence Factor

Neighboring wells will compete with one another for VOC removal. The results from the pilot study measured a Radius of Influence (ROI) of 25 feet. Allowing for a 30% overlap, a well spacing of 35 feet (17.5 ft. radius) has been used to guide the design of the SVE well layout. Therefore, the SVE wells for the full-scale system are expected to remove mass from a smaller area and an area adjustment factor should be considered. An adjustment factor based on area could be used; however, a more conservative adjustment using radius was used. The Radius of Influence Factor (RIF) was calculated to be 0.7 using the following formula:

$$RIF = \frac{Radius\ of\ Influence\ of\ full\ scale}{Radius\ of\ Influence\ of\ pilot\ study}$$

An adjustment factor of 0.49 could have been calculated based on area by dividing the area, $\pi(ROI)^2$, of influence for the full-scale area based on a ROI of 17.5 feet (i.e., 962 ft^2) by the area of influence for the pilot study based on a ROI of 25 feet (i.e., 1,963 ft^2)

A.2.3 Flow Rate Factor

The pilot SVE wells were constructed with 5-foot screens; thus, about 1.2 to 1.6 scfm was developed per foot of well screen. As described in the design report, potentially as much as 20 scfm could be developed for a well screen of 20 feet or more in length as proposed for the full-scale design. Assuming a total of 44 SVE wells, 32 shallow wells and 12 deep wells, the flow rate for the full-scale SVE system could be approximately 900 scfm.

In the full-scale system the shallow well screen will be located within the region of SVE-1S (shallow) and SVE-1I (intermediate) of the pilot study. The combined flow rate of SVE-1S and SVE-1I was 16 scfm. The flow rate factor for the shallow wells was calculated to be 1.25 using the formula:

$$FRF = \frac{Flow\ rate\ of\ a\ full\ scale\ shallow\ well}{Sum\ of\ Flow\ rate\ of\ SVE-1S\ \&\ SVE-1I\ during\ pilot\ study}$$

The deep well screen (20-foot screen approximate) will be located below the interbedded zone into the lower clay as for the pilot test well SVE-1D. During MR-2 flow rate at the deep well was measured as 7 scfm. The flow rate factor for the deep wells is calculated to be 2.86 using the formula:

$$FRF = \frac{Flow\ rate\ of\ a\ full\ scale\ deep\ well}{Flow\ rate\ of\ SVE-1D\ during\ MR-2}$$

A.2.4 Estimation of Initial Mass Removal from the Full-Scale SVE System

The mass removal rate from the full-scale SVE system is the sum of mass removal rate from the 32 shallow wells and mass removal rate from the 12 deep wells. The mass removal rate was calculated by multiplying the mass removal rate obtained from the pilot test by the SCF, RIF, FRF, and number of wells. The mass removal rate for shallow wells would be the sum of the mass removal from SVE-1S (18 lb/day) and SVE-1I (3 lb/day) equal to 21 lb/day. The mass removal rate from the deep zone was found to be 1 lb/day during the pilot study. Using the

methodology, the initial mass removal rate was estimated to be 57 lb/day. These calculations are presented in Attachment A-1. Individual constituent mass rates from the full-scale system were calculated using the reported vapor phase concentrations from the pilot study as presented in Table A-3.

Importantly, the mass removal rate predicted above is expected to approximate the upper bound of VOC mass removal during the initial operation of the SVE system. Steady-state mass removal rates are expected to be considerably less.

Table A1-1
Estimated Soil Concentrations within Influence of Pilot Test
Preliminary Design Report
Malvern TCE Superfund Site

BOREHOLE ID	PCE	TCE	1,1,1 TCA	1,1 DCE	TOTAL VOCs [mg/kg] (2)
GB-29	260	71	250	0	581
GB-2B2	467.5	102.5	106.25	0	676
VP-5	26675	2425	0	677.5	29778
Average	**9134**	**866**	**119**	**226**	**10345**

(1) Data obtained from FDA/MA Subsurface Soil Characterization (Phase 1 and Phase 2) Pre-Design Investigation Report (Golder Associates, May 2002)- Figure 3 & 4.

(2) Total of PCE, TCE, 1,1,1 TCA and 1,1 DCE

PCE - Perchloroethylene (Tetrachloroethylene)

TCE - Trichloroethylene

TCA - Trichloroethane

DCE - Dichloroethylene

Table A1-2
Estimated Soil Concentrations Throughout
Influence of Proposed Full Scale SVE System
Preliminary Design Report
Malvern TCE Superfund Site

BOREHOLE ID	TOTAL VOC (mg/kg) (2)
GB 10	30.91
GB 11	385.16
GB 12	6.25
GB 13	6.08
GB 14	33.35
GB 15	55.00
GB 16	8.42
GB 17	14.14
GB 18	73.82
GB 19	0.33
GB 1B1	3.03
GB 20	0.49
GB 21	3.07
GB 24	0.43
GB 25	266.18
GB 26	0.86
GB 27	109.12
GB 28	24.51
GB 29	604.25
GB 29V	3.57
GB 2B1	0.25
GB 2B2	725.90
GB 3	279.80
GB 31	22.80
GB 34	25.16
GB 35	1174.40
GB 35V	1278.38
GB 38	0.15
GB 39	1247.16
GB 3A1	52.08
GB 3A2	1.82
GB 4	6.15
GB 5	0.08
GB 5B1	0.28
GB 6	307.67
GB 7	3.90
GB 9B1	0.20
VP 5	29777.50
AVERAGE	**961.385**

(1) Data obtained from FDA/MA Subsurface Soil Characterization (Phase 1 and Phase 2) Pre-Design Investigation Report (Golder Associates, May 2002)- Figure 3 & 4.
(2) Total of PCE, TCE, 1,1,1 TCA and 1,1 DCE

Table A1-3
Projected Full Scale Initial Concentrations and Mass Rates @ 900 scfm
Preliminary Design Report
Malvern TCE Superfund Site

Parameter	Molecular Weight (1)	Mass Fraction, % (2)	Mass Rate lb/day (3)	Flow Rate scfm (4)	C_{vapor} mg/m^3	C_{vapor} ppmv
1,1,1 TCA	133.42	45.4	25.9	900	319	59
TCE	131.39	23.6	13.5	900	166	31
PCE	165.83	22.7	12.9	900	160	24
1,1 DCE	96.94	1.7	1.0	900	12	3
OTHERS	138	6.6	3.8	900	46	8
Total		**100**	**57**			

(1) Data obtained from Appendix G of SVE Pilot Study Report
(2) Estimated from Summary of Air Sampling Results- Appendix G of SVE Pilot Study Report
(3) Based on the full scale mass removal of 57 lb/day @ 900 scfm. (See attachment A-1)
(4) Design flow rate conservatively assuming 20 scfm at each well

Golder Associates

SUBJECT	Estimation of Mass Removal rate for Fullscale SVE Syste		
Job No. 003-6000 Ref.	Made by PC Checked Reviewed	Date 1/28/03 Sheet 1 of 4	

Factors affecting the Mass removal rates.

① Concentration of the soil

This is accounted by the Soil Concentration Factor (SCF)

② Radius of Influence

This is accounted by the Radius of Influence factor (RIF)

③ Flow rate of SVE System.

This is accounted by flow rate factor. (FRF)

a) Mass Removal rate during Pilot study = 18 lb/day.
for (MR1) shallow well

b) Mass removal rate for Deep zone during Pilot study = 1 lb/day.
(MR2)

c) Mass removal rate from Intermediate zone

Concentration from intermediate well is 6 times less than that from shallow well during pilot study

Mass removal rate $= \frac{18}{6} = 3$ lb/day

Golder Associates	SUBJECT Estimated Mass Removal from full Scale SVE system.		
	Job No. 003-6000 Ref.	Made by PG Checked MFD Reviewed BGF	Date 1/28/03 Sheet 2 of 4

(1) Calculation of Soil Concentration Factor.

Pilot study was conducted near the most contaminated area. Hence to extrapolate the soil concentration to the full scale area, a factor is required.

Pilot study was conducted near GB 29, GB 2B2 and VP-5 - bore holes, during the Phase I and Phase II PD1.

During Phase I and Phase II PD1 a total of 48 boreholes were made. VP-5 is also considered, as it had the highest VOC (air toxic) concentration.

A concentration factor was estimated to relate the pilot study soil concentration to Full scale soil concentration.

<u>Soil Concentration factor</u> is the ratio of average total soil air toxic concentration in the full scale area to that in Pilot scale area.

Average of Total Soil air Toxic concentration in Full scale area = 961 mg/K
(Table 2)

Average of Total Soil air Toxic concentration in Pilot scale area = 10345 mg/K
(Table I)

Soil Concentration factor (SCF) $= \frac{961}{10345} = 0.093$

The air toxic concentration in each borehole is sum of all the air toxics irrespective of the depth.

Golder Associates	SUBJECT Estimation of Mass Removal Rate for Full scale SVE system		
	Job No. 003-6000 Ref.	Made by PG Checked ~~[illegible]~~ Reviewed BJP	Date 1/28/03 Sheet 3 of 4

(2) Radius of Influence Factor. (RIF)

Radius of Influence for the Pilot study = 25 ft
(Section 2.3.2)

Radius of Influence for the Full scale study = 17.5 ft
(Section 2.5.1)

Radius of Influence Factor (RIF) = $\frac{17.5}{25}$ = 0.7

(3) Flow Rate Factor (FRF)

Flow Rate for the Full scale study = 900 scfm.

Number of well in Full scale study = 44 well 32 shallow 12 deep

Flow Rate at each well ≈ 20 scfm

During Pilot study, there were three SVE wells of 5ft screen; Shallow, Intermediate & Deep. Each has flow rate 6-8 scfm. Shallow screen yielded 18 lb/day during the Mass removal Test (MR1) at 8 scfm. There was no mass removal Test for the intermediate well. But Pneu Test 2 done at intermediate well on Dec 21, 01 (App D) shows that concentration of VOC is 6 times less than the Pneu Test 1 done on shallow well. Hence the mass removal rate may be assumed to be 3 lb/day. MR2 Test done on deep well indicated mass removal of 1 lb/day at 7 scfm.

Calculation of Mass Removal for the entire site

In full scale study there are 32 shallow wells and 12 deep wells

shallow wells have 20 ft screen extending in the region of shallow and intermediate wells of Pilot study. Hence we can assume that the

Golder Associates	SUBJECT Estimation of Mass Removal Rates for Full Scale SVE system		
	Job No.	Made by PC	Date 1/28/03
	Ref.	Checked MTH	Sheet 4 of 4
		Reviewed [illegible]	

shallow well of full scale test has the same mass removal rate as that of the shallow and intermediate well of pilot study put together.

ie. 18 + 3 = 21 lb/day @ 16 scfm.

Flow rate Factor = $\frac{20}{16}$ = 1.25

During MR2 the removal rate of run deep well is 1 lb/day @ 8 scf.

Flow rate factor = $\frac{20}{7}$ = 2.86

Mass Removal rate of Full scale = Mass removal rate of pilot study (shallow + intermediate) × SCF × RIF × FRF × 32 + Mass removal rate of Pilot study (deep well) × SCF × RIF × FRF × 12

= 21 × 0.093 × 0.7 × 1.25 × 32 + 1 × 0.093 × 0.7 × 2.86 × 12

= 54.68 + 2.23

56.9 ≈ 57 lb/day.

APPENDIX A2

CONDENSATION RATES CALCULATIONS

Golder Associates

SUBJECT	90% Design Report - Section Calculation - Condensate Generation		
Job No. Ref.	Malvern 003-6000	Made by BJS Checked DNB Reviewed BJC	Date 11/26/03 Sheet 1 of 6

Purpose: Estimate condensate generation rate for full-scale SVE system at Malvern in order to properly size condensate collection and storage equipment. "Worst case" (i.e. winter) conditions were used to estimate generation.

Assumptions:

- Use standard psychometric chart for concentrations of water vapor in air.
- Calculate for winter conditions, where condensate generation is greatest (warm vapor, cold ambient air)
- Extracted vapor @ 50°F (avg. from Pilot Test) and 100% relative humidity (conservative assumption)
- Ambient air @ 29°F (mean Jan. temp)
- Molecular weight of air (M) = 29 kg/kg.mole
- Absolute pressure at air/water separator = 16 in. Hg. = 0.53 atm
- Vapor flow rate = 900 scfm = 1,550 acfm = 730 L/s

Calculation:

- Using psychometric chart (Fig. 23.2)

  Conc. of water vapor @ 50°F/100% r.h. = 0.0076 kg/kg air
  conc. of water vapor @ 29°F/100% r.h. = 0.0032 kg/kg air

  Subtracting yields condensate = 0.0044 kg cond./kg air

- Use Ideal Gas Law to estimate air density (ρ)

$$\rho = \frac{PM}{RT} = \frac{(0.53\,atm)(29\,kg/kg.mole)}{(0.0821\,\frac{L\cdot atm}{gmol\cdot K})(271\,K)(1000\,g/kg)} = 6.91\times10^{-4}\,\frac{kg\,air}{L\,air}$$

Golder Associates

SUBJECT	90% Design Report - Section Calculation - Condensate Generation	
Job No. Ref. Malvern 003-6000	Made by DNB Checked Reviewed BQE	Date 11/26/03 Sheet 2 of 6

- Calculate condensate generation by multiplying vapor flow rate and condensate concentration in vapor.

$$Q = \left(0.0044 \frac{kg\ cond.}{kg\ air}\right)\left(6.91 \times 10^{-4} \frac{kg\ air}{L\ air}\right)\left(730 \frac{L\ air}{s}\right)\left(86{,}400 \frac{s}{day}\right)\left(1 \frac{L\ cond.}{kg\ cond.}\right)$$

$$= 192 \frac{L\ cond.}{day}$$

$$Q = 50\ gal.\ condensate/day$$

Conclusion: Size condensate handling storage equipment to manage 50 gal/day of condensate. Because of the design of the piping (sloped back to wells for laterals and some of headers) and previous experience, it is believed that significantly less condensate will actually be collected in the air/water separator. If condensate generated is higher than expected (i.e. close to volume calculated here), a larger condensate storage tank will be installed. Provisions have been made in the design for a future condensate storage tank.

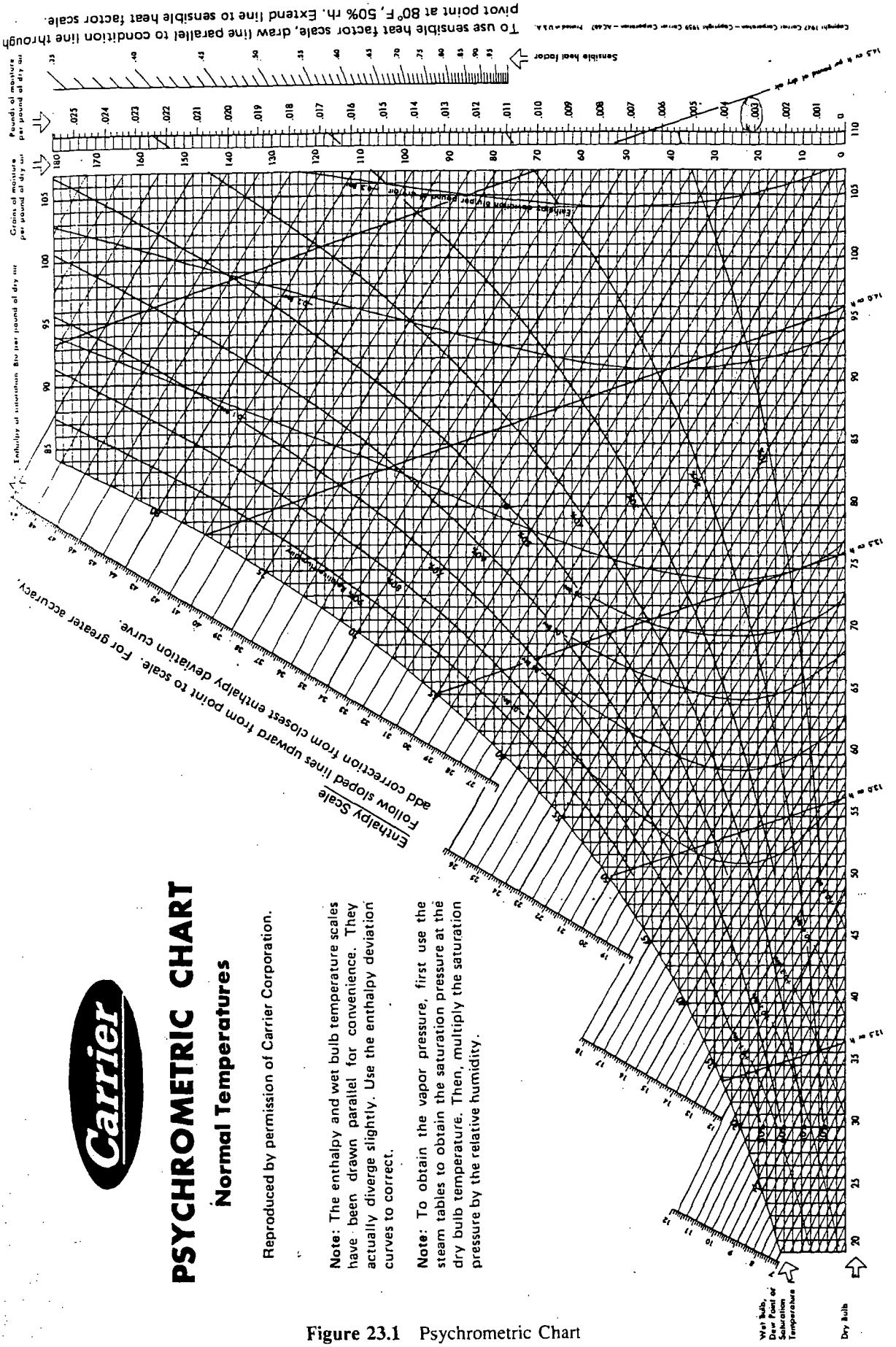

Figure 23.1 Psychrometric Chart
Customary U.S. Units

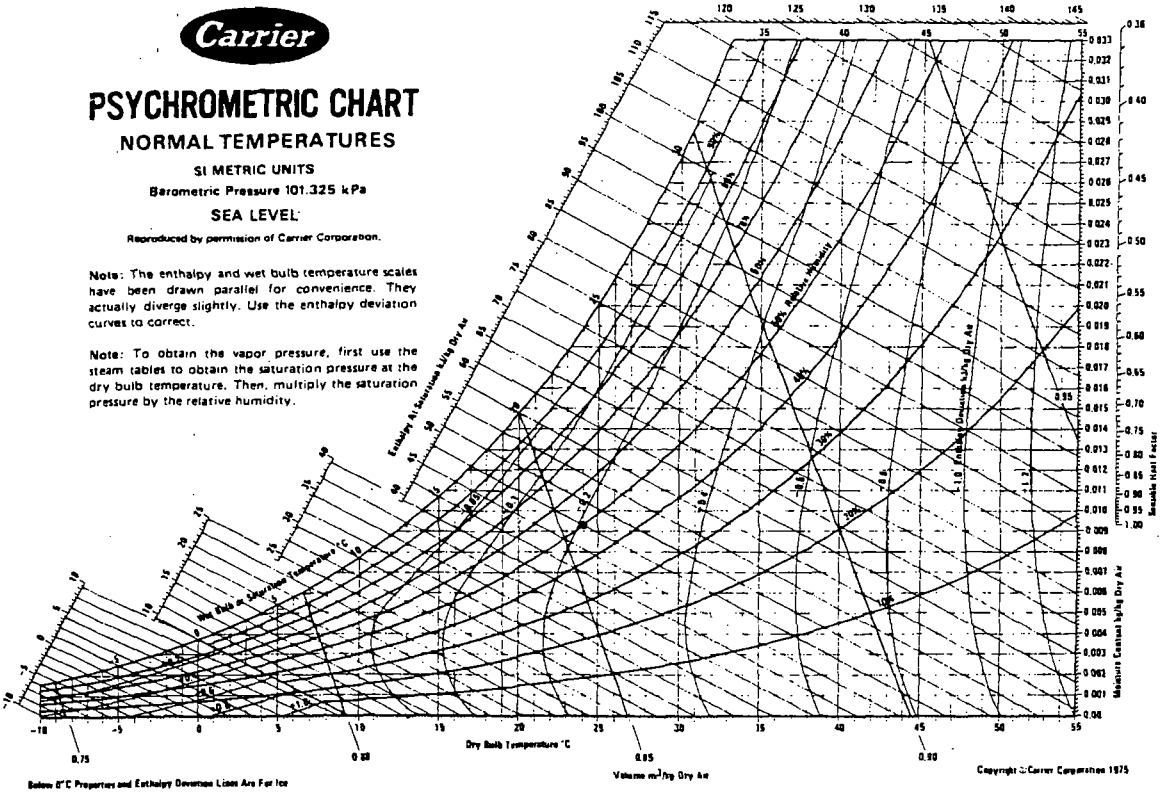

Figure 23.2 Psychrometric Chart
S.I. Units

grains (0.0093 lbm) of moisture per pound of dry air.

(c) Finding the enthalpy is different on different charts. Some charts use the same diagonal lines for wet-bulb temperature and humidity. Corrections are required in such cases. Other charts employ two alignment scales to use in conjunction with a straight-edge. Read 28.1 BTU per pound of dry air and correction of approximately −0.09 BTU/lbm.

$$h = 28.1\,\frac{\text{BTU}}{\text{lbm}} - 0.09\,\frac{\text{BTU}}{\text{lbm}}$$
$$= 28.01\ \text{BTU/lbm dry air}$$

(d) Interpolate between diagonal specific volume lines. Read $v = 13.68$ cubic feet per pound of dry air.

(e) Follow the horizontal line to the left until it intersects the dew point scale. Read $T_{dp} = 55.1°\text{F}$.

(f) From the steam tables, the saturation pressure corresponding to a dry bulb temperature of 75°F is approximately 0.43 psia. From Eq. 23.9, the water vapor pressure is

$$p_w = \phi p_{sat} = (0.50)(0.43\ \text{psia}) = 0.215\ \text{psia}$$

(g) The humidity ratio at 75°F saturated is 131.5 grains (0.0188 lbm) per pound. From Eq. 23.9, the degree of saturation is

$$\mu = \frac{\omega}{\omega_{sat}} = \frac{64.8\,\frac{\text{gr}}{\text{lbm}}}{131.5\,\frac{\text{gr}}{\text{lbm}}} = 0.49$$

5 PSYCHROMETRIC PROCESSES

The psychrometric chart is particularly useful in analyzing air conditioning processes because the paths of many processes are straight lines. Sensible heating and cooling processes, for example, follow horizontal straight lines. Adiabatic saturation processes follow lines of constant enthalpy (essentially parallel to lines of constant wet-bulb temperature). The paths of pure humidification and dehumidification follow vertical paths. Figure 23.3 summarizes the directions of these paths.

In general, the path slope is determined from the *sensible heat ratio* (also known as the *sensible heat factor*) scale on the chart. (The use of such scales varies from chart to chart.) In an air conditioning process, the sensible heat ratio, SHR, is the ratio of sensible heat added (or removed) to total heat added (or removed). (In Figs. 23.1 and 23.2, the path slope is determined from the sensible heat factor scale and the alignment point at $T_{db} = 80°\text{F}$ (24°C) and 50% relative humidity.)

$$\text{SHR} = \frac{q_s}{q_t} = \frac{q_s}{q_s + q_l} \qquad 23.13$$

6 DEW POINT OF FLUE GAS

Water vapor is an inevitable by-product of the combustion of hydrocarbon fuels. To prevent corrosion within the flue, the water vapor must be prevented from condensing. This

Monthly Averages for Malvern, PA

Average Temperature (°F) High Low
Minimum Period of Record: 30 years

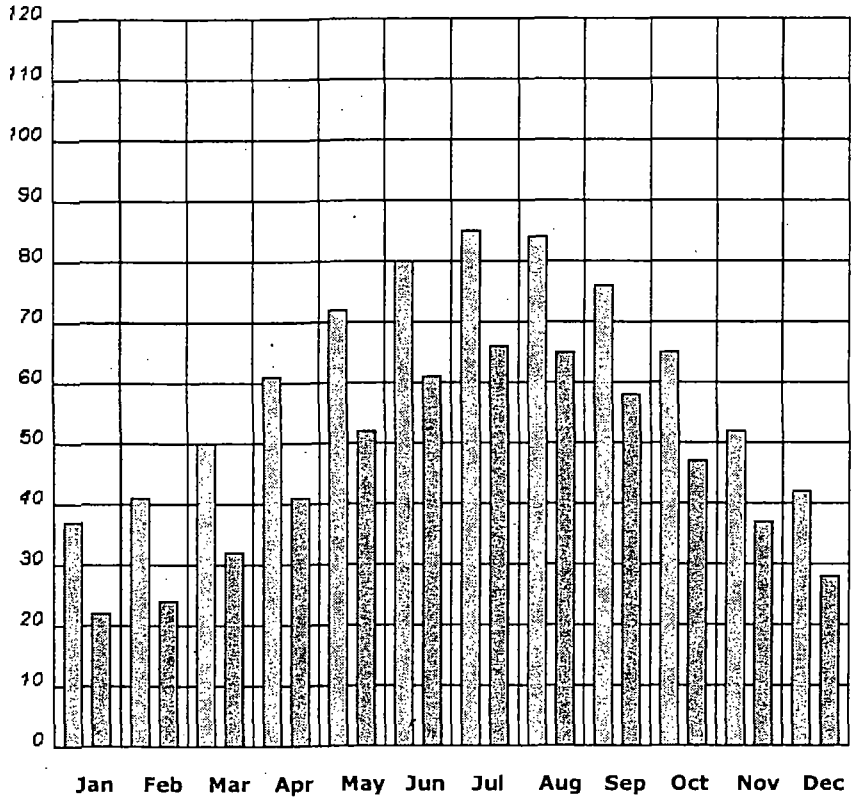

Month	Avg. High	Avg. Low	Mean	Avg. Precip.	Record High	Record Low
Jan	37°F	22°F	29°F	3.75 in.	70°F (1967)	-8°F (1977)
Feb	41°F	24°F	33°F	2.84 in.	76°F (1985)	-6°F (1961)
Mar	50°F	32°F	41°F	3.55 in.	82°F (1977)	1°F (1967)
Apr	61°F	41°F	51°F	3.60 in.	92°F (1976)	15°F (1958)
May	72°F	52°F	62°F	4.50 in.	95°F (1962)	26°F (1957)
Jun	80°F	61°F	70°F	3.81 in.	99°F (1952)	38°F (1972)
Jul	85°F	66°F	75°F	4.17 in.	101°F (1966)	41°F (1956)
Aug	84°F	65°F	74°F	3.43 in.	100°F (1983)	42°F (1954)

Urgent Message
Do you want your FREE Cre
Go Now!

Advertise Locally in Philadelph

Explore Related Sites

Allstate. Want a really quick auto Click here.

COUPONS Print FREE grocery coup weather.com! Click here

Recommended Links

Get 4.5c per min + 100 FREE min
by LowerMyBills.com

View photos of singles in your are
by Match.com

Got Student Loans? Cut your payr
by FinancialAid.com

Find Home Contractors
by Service Magic

Compare Auto Insurance Rates &
by LowerMyBills

Rates have hit bottom. Refinance
by Quicken Loans

Selling a Home? Compare REALTC
by Homegain.com

Go Shopping

Sheet 6 of 6

Sep	76°F	58°F	67°F	4.26 in.	101°F (1953)	32°F (1957)
Oct	65°F	47°F	56°F	3.16 in.	93°F (1963)	20°F (1954)
Nov	52°F	37°F	44°F	3.37 in.	82°F (1982)	10°F (1974)
Dec	42°F	28°F	35°F	3.28 in.	74°F (1984)	-6°F (1980)

Back to Previous Page

Show this page in: (•) English Units ( ) Metric Units

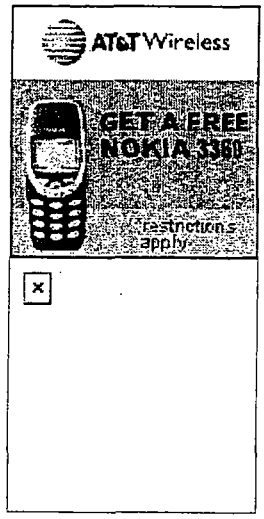

Features of the Week

- Winter Storm Warnings
- Playoff & Bowl Forecast
- Winter Health Update

What's on the Weather Channel

- OnAir info: Personalities, Programs, Music...
- Watch Atmospheres- Sundays 8p ET/PT
- Coming in January: STORM STORIES

Your Malvern, PA ...

- Sporting events
- Ski resort conditions and foreca
- Winter pollen reports
- Airport delays and travel condit
- Gardening tips and forecast

Tell Us What You Think | Add This Page To Your Favorites | Email This Page To A Friend | Make This Page Yo

How Weather Affects Your Life

Health	Health Forecast, Allergies, Skin Protection, Air Quality, Aches & Pains, Cold & Flu
Travel	Travel Forecast, Daily Traveler, Vacation Planner, Driving, Aviation
Events	Events Forecast, Sporting Events, Special Events
Recreation	Recreation Forecast, Golf, Boat & Beach, National Parks, Ski
Home & Garden	Home & Garden Forecast, Home, Garden, Schoolday, Holidays
Local	Local-Weather Forecasts
World	World Weather Forecasts & International Sites
News	News Center, Storm Watch, Tropical Update, Storm Stories, Special Reports, Financial Forecast
Weather Tools	My Page, Desktop, Email, Phone, PDA, Pager, My Site
Interact	Photo Gallery, Boards & Forums, Contact Us
Education	Weather Classroom, Dave's Dictionary, Weather Encyclopedia, Glossary, SafeSide, Rays Awarene
Multimedia	Video Forecasts, Audio Forecasts
Shopping	The Weather Channel Store

International

Brazil | France | Germany | Latin America | United Kingdom

Home | Site Map | About Us | Contact Us | Jobs | Advertise | Weather On Your Site

Copyright © 1995-2002, The Weather Channel Enterprises, Inc.
Your use of this site constitutes your acceptance of
the LEGAL RESTRICTIONS AND TERMS OF USE

weather.com Privacy Statement - Licensed by TRUSTe

APPENDIX A3

PCB-IMPACTED SOIL VOLUME CALCULATIONS

APPENDIX A3
PCB-IMPACTED SOIL VOLUME CALCULATIONS

Surfer, a widely used contouring program, was used to calculate the soil excavation volumes presented in the Design Report. Using Surfer, a mesh-centered grid was generated over the portion of the FDA in which excavation and soil removal is to occur. Separate surfaces were generated using the existing ground surface topography, and the proposed final grades, shown on Figure 2-5 of the Design Report. The corresponding Surfer generated surfaces are shown on Figures A3-1 and A3-2. Specific areas of the grid can be isolated using a blanking file, such that only grid nodes within a blanked area are used in the computations. The outline of the preliminary designated area of PCB removal was used to as a blanking boundary. In addition, separate blanking files were generated for the northern and southern soil piles.

The total volume of soil requiring removal was calculated by subtracting the existing surface (Figure A3-1) from the final surface, but set at an elevation two feet lower (Figure A3-3). This yielded a total volume of soil of 8,450 cubic feet (cu.ft), or approximately 310 cubic yards (cu. yds) (see Attachment A3-1). The volume of soil within the existing soil piles was calculated by subtracting the existing surface grid elevations (Figure A3-1) from the final surface grid (Figure A3-2). These calculations yielded a total volume of approximately 330 cu. ft (12 cu. yds) for the northern soil pile and 1,600 cu. ft (60 cu. yds) for the southern soil pile. These calculations are shown in Attachments A3-2 and A3-3 respectively. The total volume of soil requiring removal was then established by subtracting the volume of the soil piles from the total volume of soil. This yielded a volume of approximately 240 cu. yds.

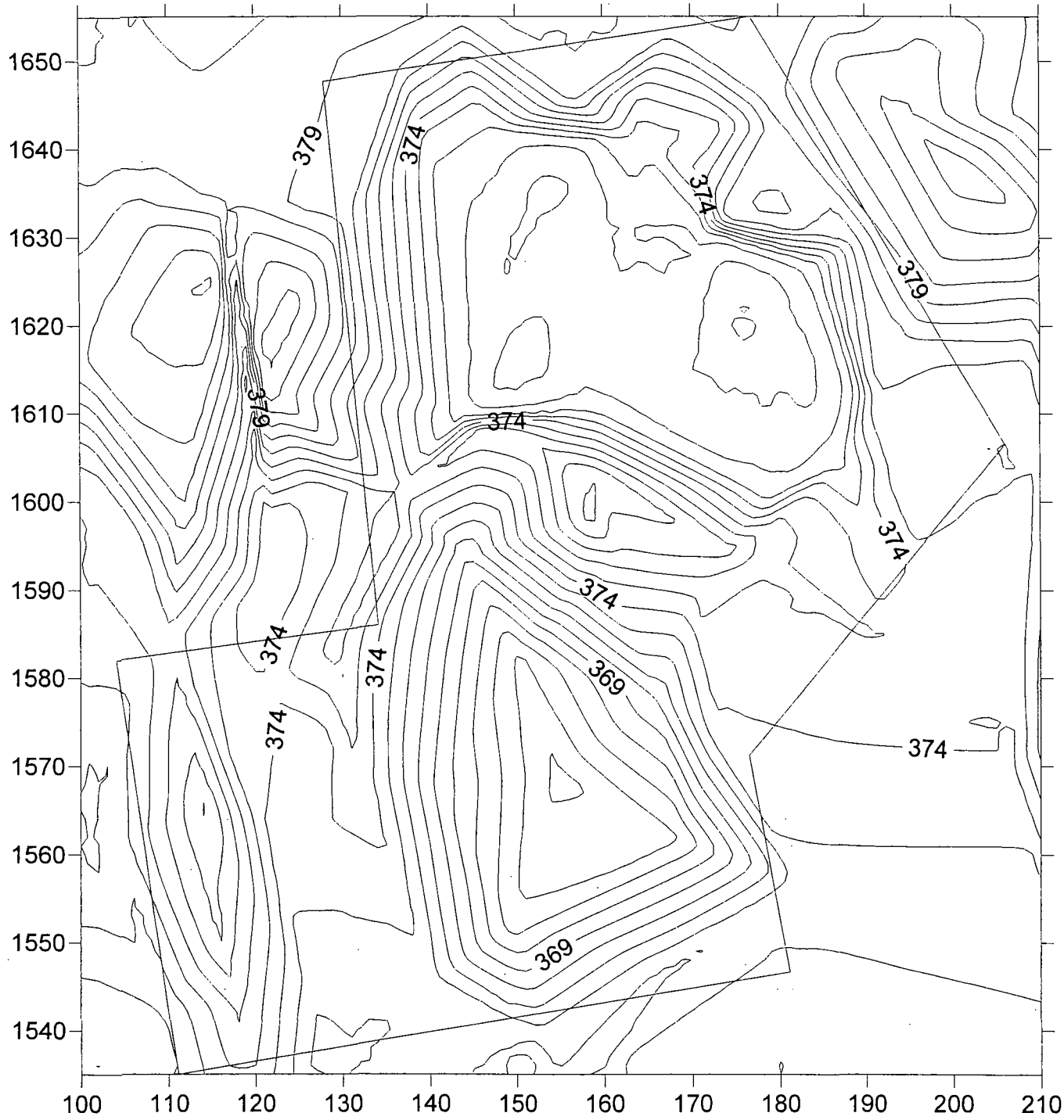

Surfer File: Exist.grd

JOB No.: 003-6000	SCALE: AS SHOWN	**Surfer Plot of Existing Conditions**	
DR BY: DSL	DATE: 4/1/04		
CHK BY: DSL	FILE No.: Surfer Figures.doc		
REV BY: BJE	DIRECTORY: 003-6000\90% Design		
Golder Associates		**CSDG**	FIGURE: **A3-1**

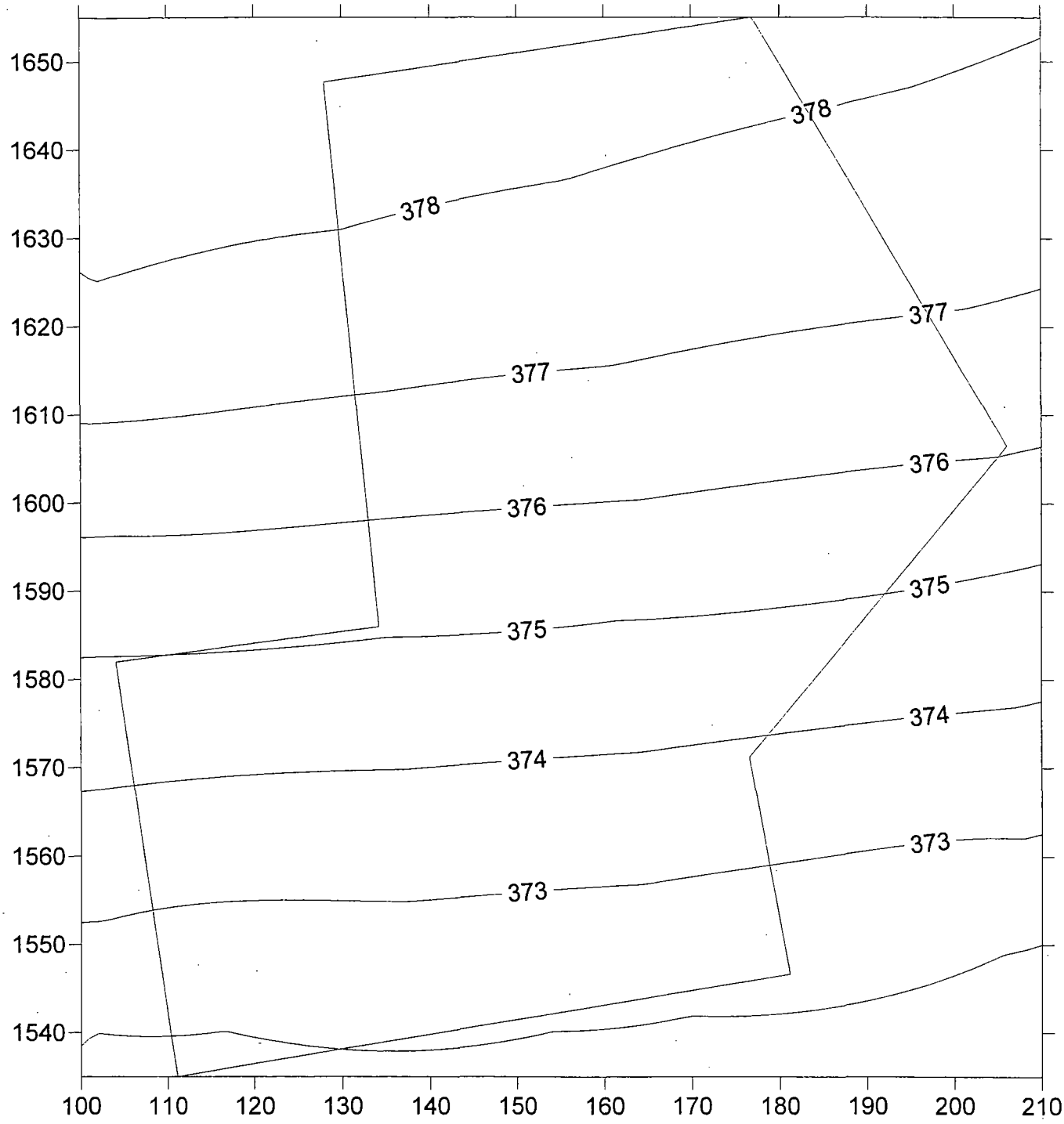

Surfer File: Final.grd

JOB No.: 003-6000	SCALE: AS SHOWN	**Surfer Plot of Final Grades**	
DR BY: DSL	DATE: 4/1/04		
CHK BY: DSL	FILE No.: Surfer Figures.doc		
REV BY: DSL	DIRECTORY: 003-6000\90% Design		
Golder Associates		**CSDG**	FIGURE: **A3-2**

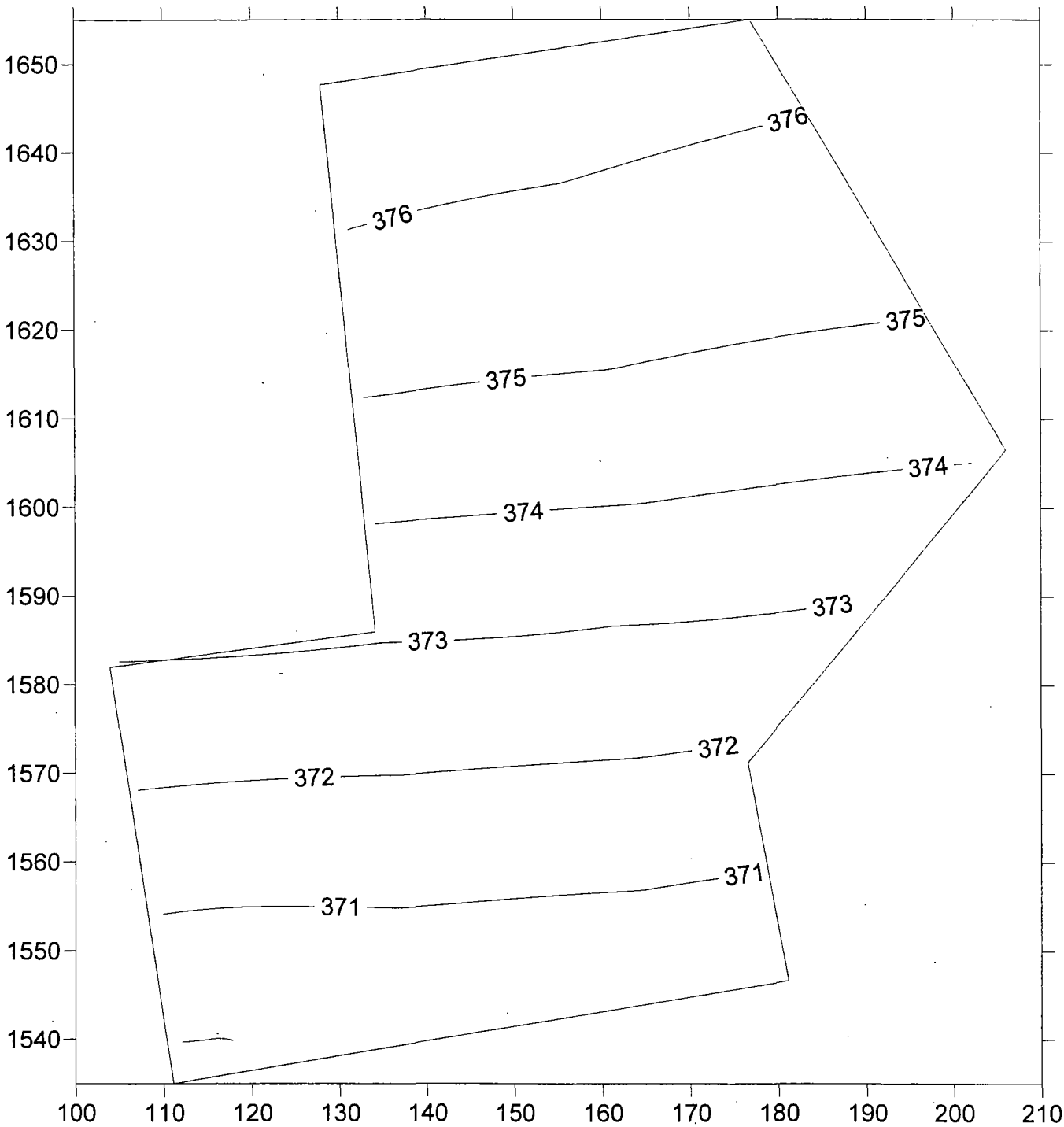

Surfer File: Final Blank minus 2.grd

JOB No.: 003-6000	SCALE: AS SHOWN	**Surfer Plot of Intermediate Excavation Grades**	
DR BY: DSL	DATE: 4/1/04		
CHK BY: DSL	FILE No.: Surfer Figures.doc		
REV BY: BJC	DIRECTORY: 003-6000\90% Design		
Golder Associates		**CSDG**	FIGURE: **A3-3**

ATTACHMENT A3-1

Grid Volume Computations

Fri Dec 12 09:08:16 2003

Upper Surface

Grid File Name:	C:\My Documents\Projects\003-6000 - Malvern\Surfer\Exist Blank.grd
Grid Size:	121 rows x 111 columns
X Minimum:	100
X Maximum:	210
X Spacing:	1
Y Minimum:	1535
Y Maximum:	1655
Y Spacing:	1
Z Minimum:	364.89767321844
Z Maximum:	379.7720052971

Lower Surface

Grid File Name:	C:\My Documents\Projects\003-6000 - Malvern\Surfer\Final Blank minus 2.grd
Grid Size:	121 rows x 111 columns
X Minimum:	100
X Maximum:	210
X Spacing:	1
Y Minimum:	1535
Y Maximum:	1655
Y Spacing:	1
Z Minimum:	369.95174167782
Z Maximum:	376.49917435656

Volumes

Z Scale Factor:	1

Total Volumes by:

Trapezoidal Rule:	-4004.4831675463
Simpson's Rule:	-4002.613593594
Simpson's 3/8 Rule:	-3998.8536913279

Cut & Fill Volumes

Positive Volume [Cut]:	8446.2640007286
Negative Volume [Fill]:	12450.747168275
Net Volume [Cut-Fill]:	-4004.4831675463

Areas

Planar Areas

Positive Planar Area [Cut]:	3495.1961583978
Negative Planar Area [Fill]:	3581.8038416022
Blanked Planar Area:	6123
Total Planar Area:	13200

Surface Areas

Positive Surface Area [Cut]:	3885.2457982102
Negative Surface Area [Fill]:	4079.1733069902

ATTACHMENT A3-2

Grid Volume Computations

Fri Dec 12 08:01:02 2003

Upper Surface

Grid File Name:	C:\My Documents\Projects\003-6000 - Malvern\Surfer\Exist N_Pile.grd
Grid Size:	121 rows x 111 columns
X Minimum:	100
X Maximum:	210
X Spacing:	1
Y Minimum:	1535
Y Maximum:	1655
Y Spacing:	1
Z Minimum:	374.53221534191
Z Maximum:	379.11223894554

Lower Surface

Grid File Name:	C:\My Documents\Projects\003-6000 - Malvern\Surfer\Final Blank.grd
Grid Size:	121 rows x 111 columns
X Minimum:	100
X Maximum:	210
X Spacing:	1
Y Minimum:	1535
Y Maximum:	1655
Y Spacing:	1
Z Minimum:	371.95174167782
Z Maximum:	378.49917435656

Volumes

Z Scale Factor:	1

Total Volumes by:

Trapezoidal Rule:	331.08376982571
Simpson's Rule:	330.85431585112
Simpson's 3/8 Rule:	333.58690276769

Cut & Fill Volumes

Positive Volume [Cut]:	366.75133043336
Negative Volume [Fill]:	35.667560607644
Net Volume [Cut-Fill]:	331.08376982571

Areas

Planar Areas

Positive Planar Area [Cut]:	269.80494138966
Negative Planar Area [Fill]:	48.195058610337
Blanked Planar Area:	12882
Total Planar Area:	13200

Surface Areas

Positive Surface Area [Cut]:	307.73497604843
Negative Surface Area [Fill]:	60.635587450147

ATTACHMENT A3-3

Grid Volume Computations

Fri Dec 12 11:35:18 2003

Upper Surface

Grid File Name:	C:\My Documents\Projects\003-6000 - Malvern\Surfer\Exist S_Pile.grd
Grid Size:	121 rows x 111 columns
X Minimum:	100
X Maximum:	210
X Spacing:	1
Y Minimum:	1535
Y Maximum:	1655
Y Spacing:	1
Z Minimum:	372.87347180241
Z Maximum:	379.02459481045

Lower Surface

Grid File Name:	C:\My Documents\Projects\003-6000 - Malvern\Surfer\Final Blank.grd
Grid Size:	121 rows x 111 columns
X Minimum:	100
X Maximum:	210
X Spacing:	1
Y Minimum:	1535
Y Maximum:	1655
Y Spacing:	1
Z Minimum:	371.95174167782
Z Maximum:	378.49917435656

Volumes

Z Scale Factor:	1

Total Volumes by:

Trapezoidal Rule:	1607.6487237697
Simpson's Rule:	1607.5071015872
Simpson's 3/8 Rule:	1608.846972043

Cut & Fill Volumes

Positive Volume [Cut]:	1607.8379655682
Negative Volume [Fill]:	0.1892417985383
Net Volume [Cut-Fill]:	1607.6487237697

Areas

Planar Areas

Positive Planar Area [Cut]:	548.33215257334
Negative Planar Area [Fill]:	0.6678474266594
Blanked Planar Area:	12651
Total Planar Area:	13200

Surface Areas

Positive Surface Area [Cut]:	621.37100305611
Negative Surface Area [Fill]:	0.70253571969715

APPENDIX A4

CULVERTS STRUCTURAL ANALYSIS

Golder Associates

SUBJECT	Truck load effect on existing rock culvert	
Job No. Ref. 003-6000	Made by SXZ Checked LWH Reviewed DGS	Date 11/26/03 Sheet 1 of 7

objective : To evaluate effect of Truck load on culvert (rock)

Reference : 1. AASHTO LRFD Bridge design Specifications , 1998

2. "Rock Mechanics and design of structure in rock" Obert, L and Duvall W (1967)

3. "Rock Mechanics in engineering practice" Stagg and Zienkiewicz (1968)

4. "Subsurface Investigations", NHI Course 13231, FHWA 1997.

5 "Geotechincal and Foundation Engineering" Robert W Day, 1999

Assumptions :

(reference 5)

1.) Typical unit weight values were selected here for overburden fill and compacted gravel stratum , $\gamma_{fill} = 125$ pcf , $\gamma_{gravel} = 135$ pcf.

2) Based on field pictures of existing culvert, simplified rock culvert model was establised as shown Fig.1 in page 2., unit weight of rock mass is assumed to be 160 pcf based on representative range of rock unit weights see Table 10-1 in reference 4 ,

3) Based on AASHTO's bridge & Road design Truck Load (reference 1.) See page 5, a 32 kip point load was assumed Here to represent construction Truck Wheel Load applied on existing culvert as Live Load.

4) The rock mass of culvert and underlying base rock block were assumed to have solid quality with minor discontinuity& crack. Thus a simple beam analysis model can be utilized Herein, see Fig. 2. in page 2.

5) A lateral width of 1 ft was used Herein (South-North Direction)

Calculation Model

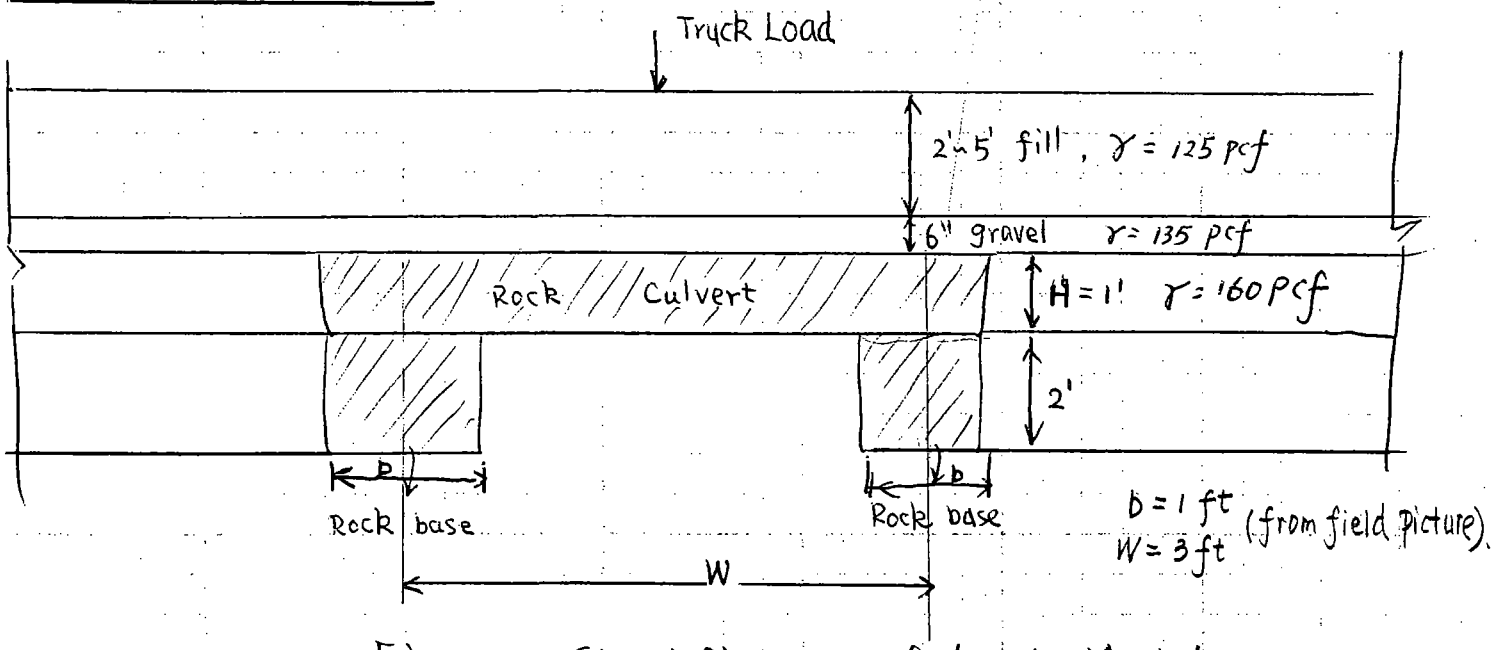

Figure 1. Simplified Rock Culvert Model.

Considering the worst case with 5-ft fill overburden.

Dead load (Q_D): $Q_D = \gamma_{fill} \cdot H_{fill} + \gamma_{gravel} \cdot H_{gravel} + \gamma_{rock} \cdot H_{rock}$

$= 125\ pcf \cdot 5\ ft + 135\ pcf \cdot 0.5\ ft + 160\ pcf \cdot 1\ ft$

$= \underline{852.5}$ lb/ft

Live Load (LL): A 32-kip Live Truck load was considered @ midspan of rock culvert to count the worst case (Maximum Moment in midspan)

Analysis Model: based on pictures in field, the rock culvert was assumed as a simple beam supported by rock base @ side ends

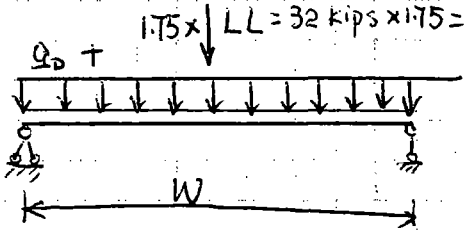

Fig. 2. Simple beam model

Golder Associates	SUBJECT Truck load effect on existing rock culvert		
	Job No. Ref. 003-~~6000~~	Made by SXZ Checked HH Reviewed [illegible]	Date Sheet 3 of 7

Using strength I Load combination (reference 1.) to count basic load combination relating to the normal veichular use.

The load includes: Dead load (uniform distributed load, q_D, which represents total weight of rock culvert and overburden fill & gravel)

+

1.75 · Live load (LL, which is assumed to be 32 kips point load Here to represent truck load)

Calculations:

Maximum Moment (M_M) $= \frac{1}{8} q_D W^2 + \frac{1}{4}(1.75LL) \cdot W$

(@ Midspan)

$= \frac{1}{8} \cdot 852.5\ pf \cdot 3^2 ft^2 + \frac{1}{4} \cdot 1.75 \cdot 32\ kip \cdot 3ft$

$= \underline{\underline{42.96}}\ kip \cdot ft$

Maximum Tension Stress (T_M) $= \frac{6M_M}{H^2 \cdot 1ft}$ Here, H is culvert Height = 1 ft

(@ Midspan)

$= \frac{6 \times 42.96}{1^2 \cdot ft^3} = 257.8\ kipsf = \underline{\underline{12.3}}\ Mpa$

Maximum shear strength (S_M) $= \left(\frac{1}{2} q_D W + \frac{1}{2}(1.75LL)\right) / H \cdot 1ft$

(@ both end of span)

$= \left(\frac{1}{2} \times 852.5\ P/ft \cdot 3ft + \frac{1}{2} \cdot 1.75 \cdot 32 kip\right) / ft^2$

$= 29.28\ kipsf = 1.4\ Mpa$

Maximum Compression Stress on rock block of each side of Culvert (C_M) $= \left(\frac{1}{2} q_D W + \frac{1}{2}(1.75LL)\right) / b \cdot 1ft$

$= \underline{\underline{1.4}}\ Mpa$

Golder Associates	SUBJECT Truck load effect on existing rock culvert		
	Job No. Ref. 003-6000	Made by SXZ Checked HH Reviewed OGE	Date Sheet 4 of 7

Summary: By comaring typical mechanical properties of rock (see page 6 & 7) with the results from above calculations, the construction truck loading will not cause culvert structure damage because those maximum stress (Tensile, shear, compressive) are below typical rock strength.

However, It should be noted local rock culvert damage might occur upon the construction truck load if some rock discontinuity & crack exist.

SPECIFICATIONS

COMMENTARY

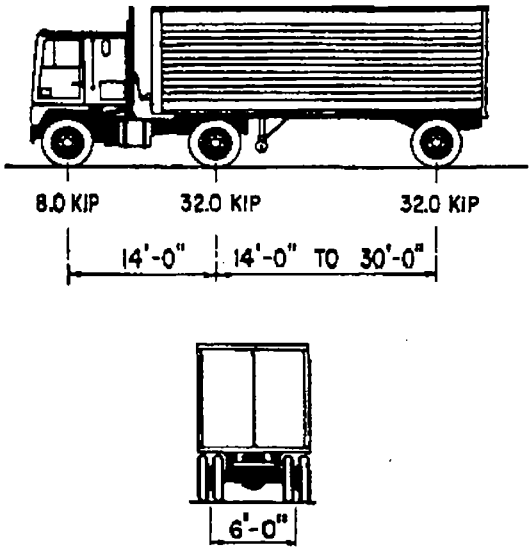

Figure 3.6.1.2.2-1 - Characteristics of the Design Truck

3.6.1.2.3 Design Tandem

The design tandem shall consist of a pair of 25.0-KIP axles spaced 4.0 FT apart. The transverse spacing of wheels shall be taken as 6.0 FT. A dynamic load allowance shall be considered as specified in Article 3.6.2.

3.6.1.2.4 Design Lane Load

The design lane load shall consist of a load of 0.64 KLF, uniformly distributed in the longitudinal direction. Transversely, the design lane load shall be assumed to be uniformly distributed over a 10.0 FT width. The force effects from the design lane load shall not be subject to a dynamic load allowance.

3.6.1.2.5 Tire Contact Area

The tire contact area of a wheel consisting of one or two tires shall be assumed to be a single rectangle, whose width is 20.0 IN and whose length in IN shall be taken as:

$$\ell = \gamma\,(1 + IM/100)\,P/2.5 \qquad (3.6.1.2.5\text{-}1)$$

where:

γ = load factor

IM = dynamic load allowance percent

C3.6.1.2.5

The implication of extending the length of the tire patch by the load factor is that the contact pressure remains nearly constant as load varies. The assumed constant pressure built into this article is 0.125 KSI.

The actual distribution of tire pressure is variable, with higher values under the tire walls. However, the area of high pressure is so small that the variation can be safely neglected in practical design.

The load factor shown in the equation should be that specified for the limit state under consideration.

Page 5 of 7

TABLE 10-1
REPRESENTATIVE RANGE OF DRY UNIT WEIGHTS

Rock Type	Unit Weight Range (KN/M^3)
Shale	22-25
Sandstone	17-27
Limestone	19-28
Schist	25-29
Gneiss	25-29
Granite	24-29
Basalt	20-30

1. Dry unit weights are for moderately weathered to unweathered rock.
2. Wide range in unit weights for shale, sandstone, and limestone represents effect of variations in porosity, cementation, grain size, etc.
3. Specimens with unit weights falling outside the ranges contained herein may be encountered.

TABLE 10-2
MECHANICAL PROPERTIES OF ROCK
(Obert and Duvall, 1967)

	Compressive Strength of Test Group (MPa)			Tensile Strength of Test Group (MPa)		Modulus of Rupture (MPa)			Static Modulus of Elasticity of Test Group (GPa)		Dynamic Modulus of Elasticity of Test Group (GPa)	
Rock Type and Number of Test Groups	Max.	Min.	>50% of Data within	Max.	Min.	Max.	Min.	>50% of Data within	Max.	Min.	Max.	Min.
Amphibolite(13)	502	204				50	25				100	45
Basalt (9)	348	79				45	15				85	40
Dibase (10)	348	155	265/335			55	30	34/36			95	70
Diorite (11)	324	150	165/235			50	15				40	24
Dolomite (10)	348	60				25	15				80	20
Gneiss (15)	244	150	165/235			20	10	12/18			100	25
Granite (17)	285	154	165/235	54	28	25	10	12/18	74	17	80	10
Greenstone (11)	305	110				45	10		60	46	100	20
Limestone (16)	185	35	135/200			35	2.5		80	28	95	10
Marble (8)	230	45	200/235			20	10					
Marlstone (15)	190	70	65/135			30	2.5		32	4	45	10
Quartzite (11)	610	140				45	10					
Sandstone (18)	230	32		19	7	25	4	4/7	49	9	55	5
Shale (18)	225	73	65/135			30	2		51	11	65	10
Siltstone (8)	307	35				35	8				60	7

page 6/7

TABLE 10-3
ENGINEERING CLASSIFICATION OF INTACT ROCK
(Deere and Miller, 1966; Stagg and Zienkiewicz, 1968)

I. On basis of strength ($\sigma_{a(ult)}$)

Class	Description	Uniaxial compressive strength (MPa)
A	Very high strength	Over 220
B	High strength	110-220
C	Medium strength	55-110
D	Low strength	28-55
E	Very low strength	Less than 55

II. On basis of modulus ratio ($E_t/\sigma_{a(ult)}$)

Class	Description	Modulus ratio [b]
H	High modulus ratio	Over 500
M	Average (medium) ratio	200-500
L	Low modulus ratio	Less than 200

[a] Rocks are classified by both strength and modulus ratio such as AM, BL, BH, CM, etc.

[b] Modulus ratio = $E_t/\sigma_{a(ult)}$ where E_t is tangent modulus at 50% ultimate strength and $\sigma_{a(ult)}$ is the uniaxial compressive strength.

TABLE 10-4
TYPICAL SHEAR STRENGTH PARAMETERS OF INTACT ROCK
(Stagg and Zienkiewicz, 1968)

Rock type	$\sigma_{a(ult)}$ MPa		c, cohesion MPa	ϕ (deg)
Granite	Range	65-270	9-40	51-58
	Average	165	24	55
Limestone	Range	20-200	3-35	37-58
	Average	100-135	16-22	50
Sandstone	Range	20-200	4-40	48-50
	Average	55-135	10-25	48

$\tau = C + N \tan\phi$

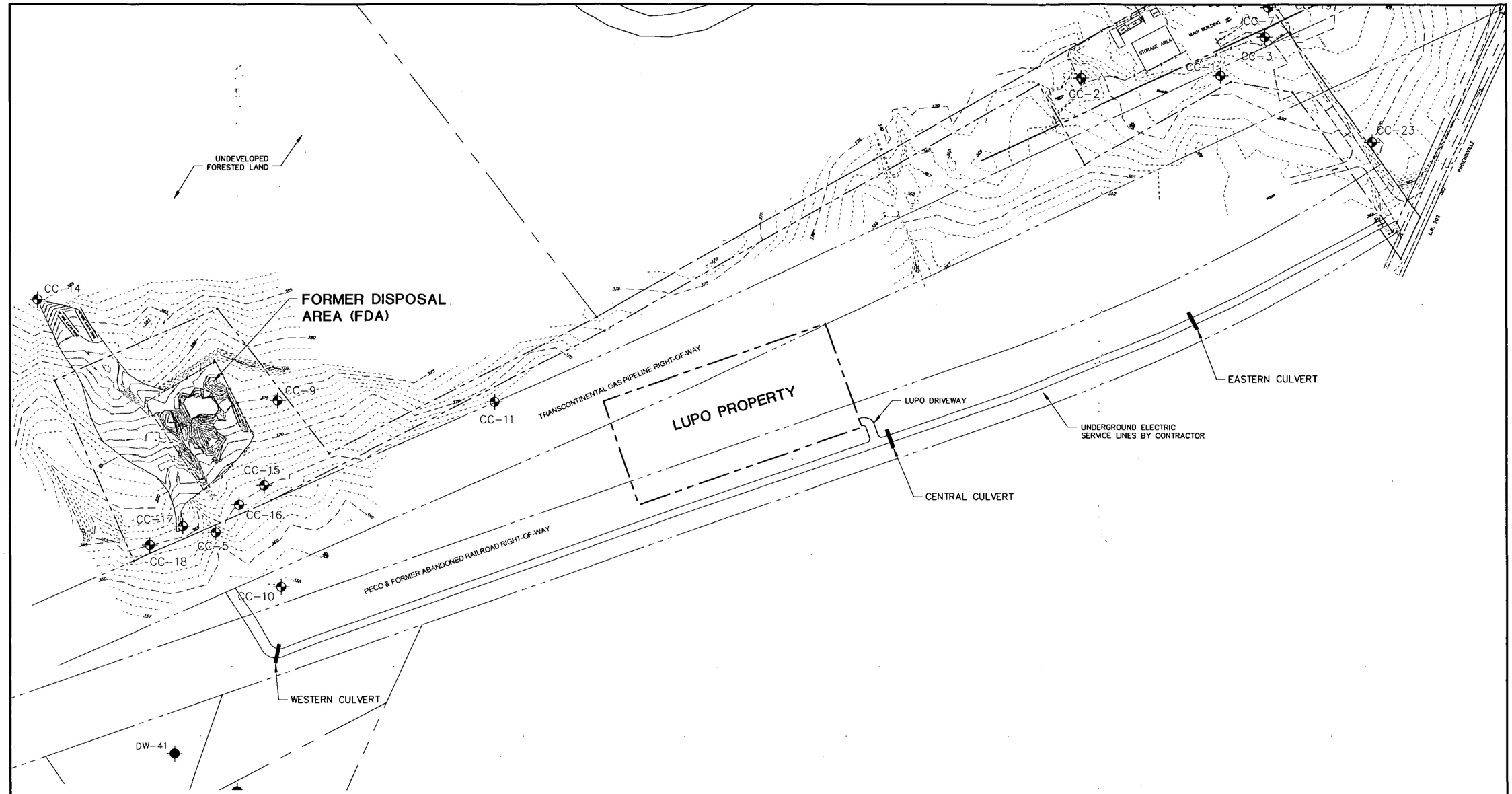

LEGEND

- GW-3 — MONITORING WELL (INSTALLED DURING PRE-DESIGN INVESTIGATION)
- CC-14 — MONITORING WELL (INSTALLED PRIOR TO PRE-DESIGN INVESTIGATION)
- MONITORING WELL (RETROFITTED EXISTING HOME WATER SUPPLY WELL)
- SITE BOUNDARY
- EXISTING CHAIN LINK SECURITY FENCE
- ELECTRIC SERVICE LINE
- OUTLINE OF GAS PIPELINE RIGHT-OF-WAY AS SHOWN IN REMEDIAL INVESTIGATION
- APPROXIMATE NORTHERN EXTENT OF GAS PIPELINE RIGHT-OF-WAY OBSERVED DURING PRE-DESIGN INVESTIGATION
- PROPOSED ACCESS ROAD

NOTES

1.) CULVERT LOCATIONS SHOWN ARE APPROXIMTE.

REFERENCES

1.) TOPOGRAPHIC FEATURES TAKEN FROM CADD FILE "MALVERN.DWG" DATED 05/24/96, SUPPLIED TO de maximus, Inc. BY USEPA IN MARCH 2000, EXCEPT AS NOTED BELOW.

2.) TOPOGRAPHIC FEATURES INSIDE THE LIMIT OF PRE-DESIGN INVESTIGATION SURVEY AREA TAKEN FROM CADD FILE "S0101(2000)" DATED 10/31/01 SUPPLIED BY PENNONI ASSOCIATES, MODIFIED BY GOLDER ASSOCIATES ON 04/10/02.

3.) LOCATION OF ASTON ROAD AND JAMES THOMAS ROAD ESTIMATED BY GOLDER ASSOCIATES FROM AERIAL PHOTOS.

4.) LUPO PROPERTY AND DRIVEWAY ESTIMATED FROM CHESTER COUNTY, PA DEED BOOK 0355 PAGE 338 ROW PROPERTY LINES.

60 0 60 120
SCALE FEET

REV	DATE	DES	REVISION DESCRIPTION	CADD	CHK	RVW

PROJECT
CHEMCLENE SITE DEFENSE GROUP
MALVERN TCE SUPERFUND SITE
EAST WHITELAND TOWNSHIP, PENNSYLVANIA

TITLE
EXISTING CULVERT LOCATIONS

Golder Associates
Philadelphia USA

PROJECT No.		003-6000	FILE No.		0036000P001
DESIGN	DSL	08/10/04	SCALE	AS SHOWN	REV. 0
CADD	MJS	08/10/04			
CHECK	DSL	08/13/04			
REVIEW	BJE	08/13/04			

FIGURE A4-1

Title: Malvern

Project: Culvert

Photo 1

Description:

Western culvert looking north

4' to top
6' to bottom
3' wide

Photo 2

Description:

Western culvert looking south

2' to top
4' to bottom
3' wide

Title: Malvern

Project: Culvert

Photo 3:

Description:

Western Culvert

Looking north

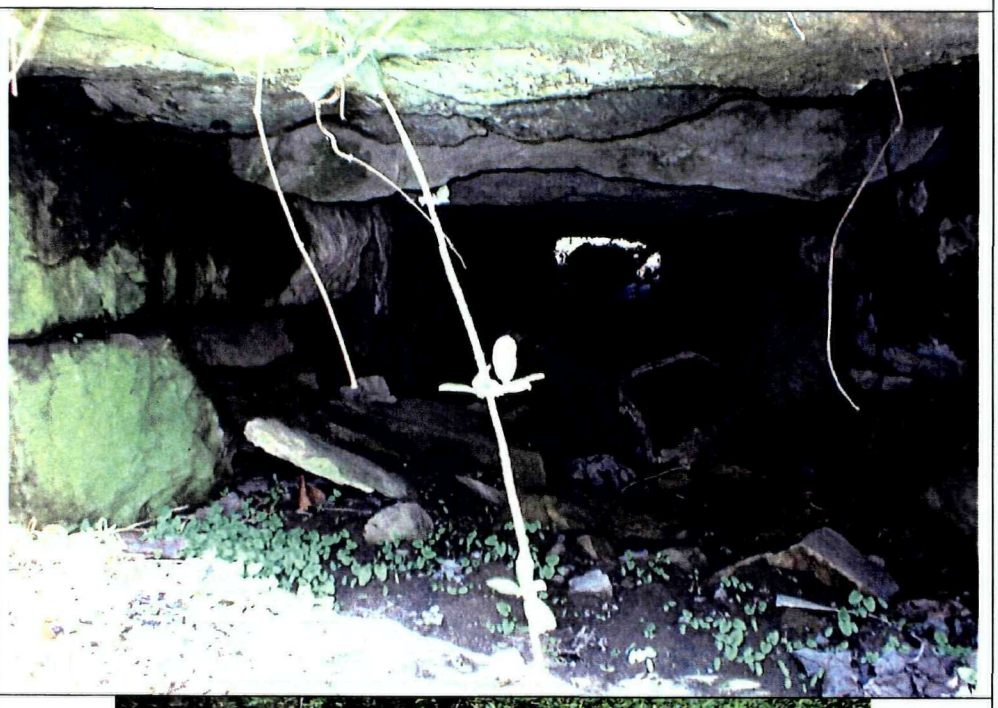

Photo 4:

Description:

Central culvert
looking north

4' to top
6' to bottom
2' wide

Title: Malvern

Project: Culvert

Photo 5:

Description:

Central culvert looking south

5' to top
7' to bottom
2' wide

Photo 6:

Description:

Central culvert looking south

Title: Malvern

Project: Culvert

Photo 7:

Description:

Eastern culvert looking south

2' to top
5' to bottom
2' wide

Photo 8:

Description:

Eastern culvert looking south

Title: Malvern

Project: Culvert

Photo 9:

Description:

Eastern culvert looking north

2' to top
4' to bottom
3' wide

APPENDIX A5

EXCAVATION STABILITY ANALYSIS

Golder Associates	SUBJECT: Malvern Excavation Stability		
	Job No.: 003-6000	Made by: MFH	Date: 4/4/03
	Ref.:	Checked:	Sheet 1 of 9
		Reviewed:	

OBJECTIVE:

To determine the distance that backfilling equipment needs to keep from the face of the existing excavation to insure the stability of the excavation face.

METHOD:

Methodology based on the use of typical slope stability theories and methods presented in common geotechnical texts and coded into the SLOPE/W slope stability analysis software package (Reference 1). In particular, the Spencer and Janbu methods of analysis were selected to evaluate the slope configurations. The Spencer Method, which was used to determine circular-shaped failure surfaces, is a limit equilibrium method utilizing a method of slices that must satisfy both force and moment equilibrium. The Janbu Method was used to evaluate wedge-shaped failure surfaces and is also a limit equilibrium method, but utilizes the method of slices to conservatively satisfy force equilibrium only.

Using the SLOPE/W slope stability program a representative cross section of the excavation will be analyzed to determine the stability of the excavation face. The equipment used during the backfill operations will be expressed in the analysis as a surcharge load. The surcharge will be moved away from the face of the slope until achieving an acceptable factor of safety for the stability of the excavation face. The distance from the face of the excavation that results in an acceptable factor of safety will be considered the minimum distance that all equipment needs to keep between itself and the excavation. The results of unconsolidated/undrained shear testing previously performed on soil samples collected from the site were used to model soil behavior.

REFERENCES:

1. "SLOPE/W," Version 4.23, GEO-SLOPE International Ltd., 1999.
2. "Principles of Foundation Engineering," Braja M. Das, 1995
3. "Foundations & Earth Structures," NAVFAC Design Manual 7.02, 1986.
4. "Unconsolidated/Undrained Shear Strength data," Golder Laboratories, Cherry Hill, 2000.
5. Caterpillar 315C L Hydraulic Excavator Specifications.

ASSUMPTIONS:

1. The excavation was created during EPA site remediation efforts to remove contaminated soil. It is unknown what the slopes of the sides of the excavation were at the time of construction, but photographs and field observations suggest that the existing worst case excavation faces are near vertical. In order to maintain conservatism the model cross section that will be analyzed is assumed to be vertical.
2. The subsurface stratigraphy is as depicted on the attached figures and is based upon data from previous site investigations.
3. Groundwater is mounded at the ground surface.

4. The equipment used during the backfilling operations will be a small hydraulic excavator (315C L, long stick,28" triple grouser) with an assumed ground pressure of 800 psf (see attached Ref. 4).
5. The minimum distance that all equipment must remain from the excavation face will be determined by the distance of the surcharge load that results in a factor safety equal to or greater than 1.1.

CALCULATIONS:

See attached SLOPE/W critical failure surface outputs (figures 1 and 2) for each case indicated in above methods section.

CONCLUSIONS:

Based on the methods and assumption stated herein, the minimum factor of safety of 1.1 is achieved when the surcharge loading is keep at a distance of 8.0 ft. for the circular failure analysis and 9.25 ft. for the block failure analysis. Therefore, to maintain the stability of the excavation facing, backfilling equipment should no be permitted within 9.25 ft. of the excavation. As more fill is placed directly behind the excavation, the fill material will begin to act as a buttress to resist the lateral earth pressure caused by the surcharge loading of the equipment. Using this method of controlled backfilling will decrease the distance that the equipment is required to keep from the excavation.

003-6000
Malvern
Backfill Equiptment Influence Zone
Figure 2: Block Specified Failure Analysis - Janbu Method

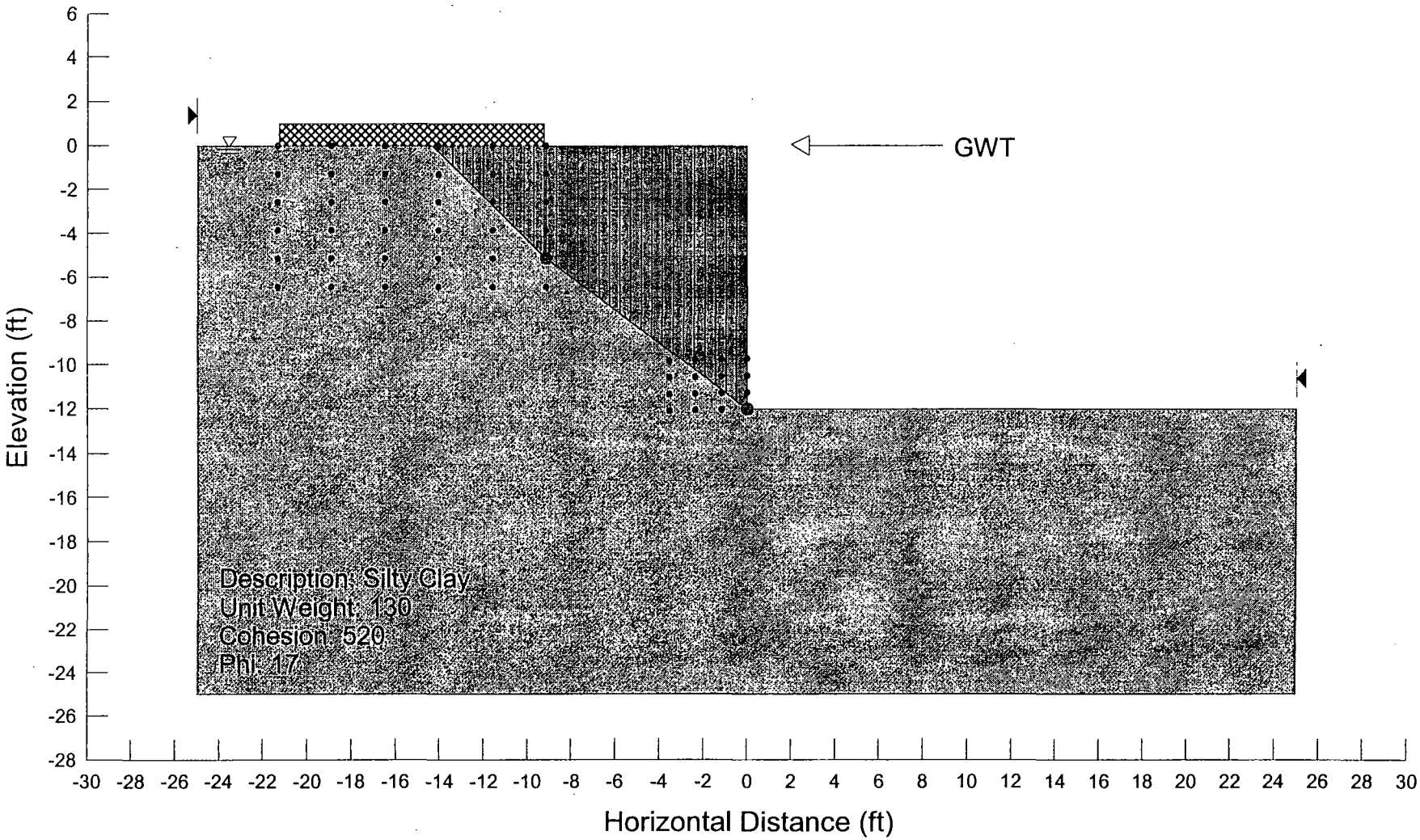

003-6000
Malvern
Backfill Equiptment Influence Zone
Figure 1: Circular Failure Analysis - Spencer Method

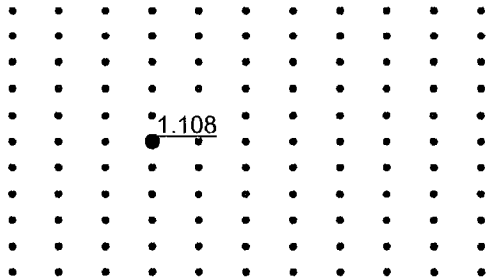

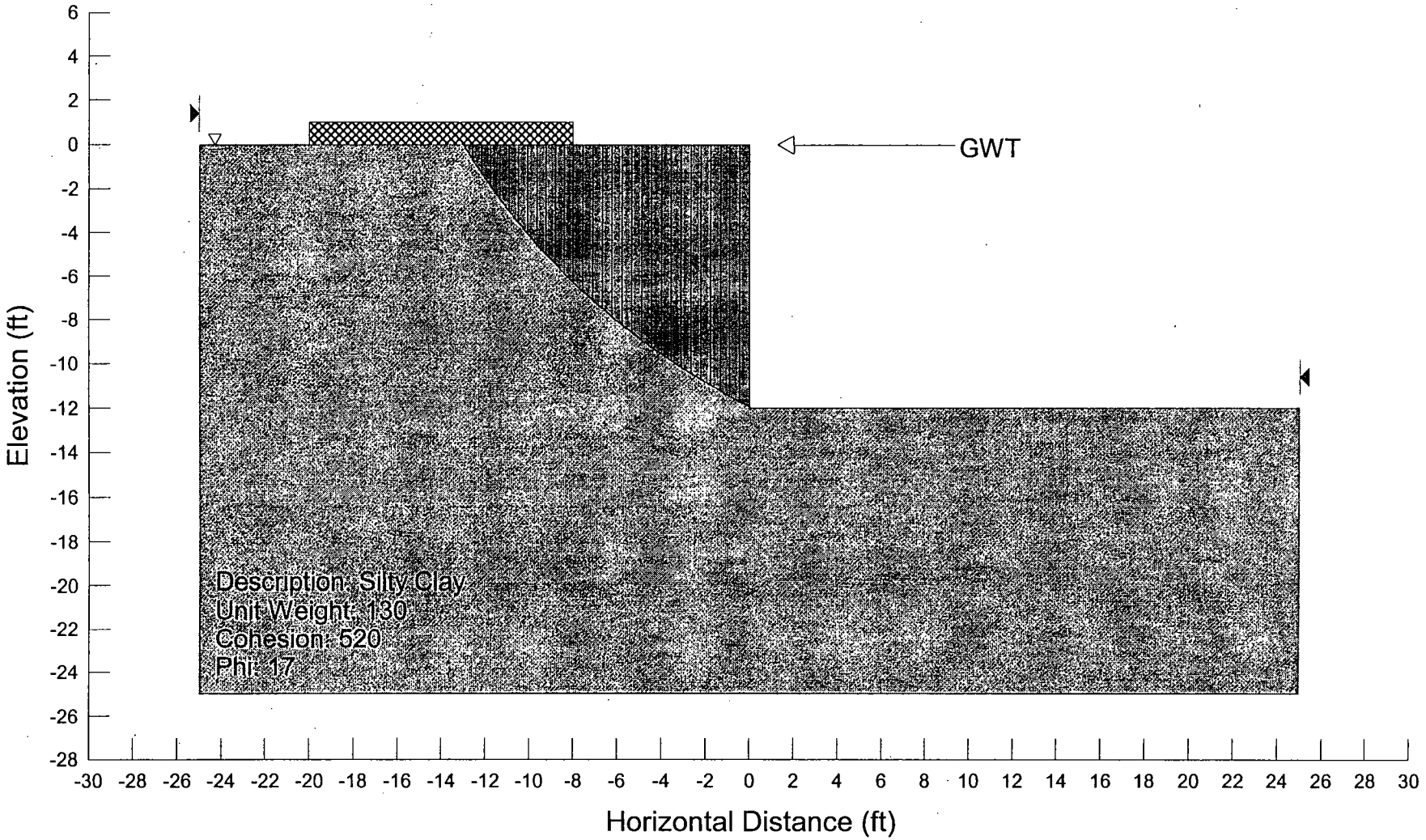

Dimensions

All dimensions are approximate.

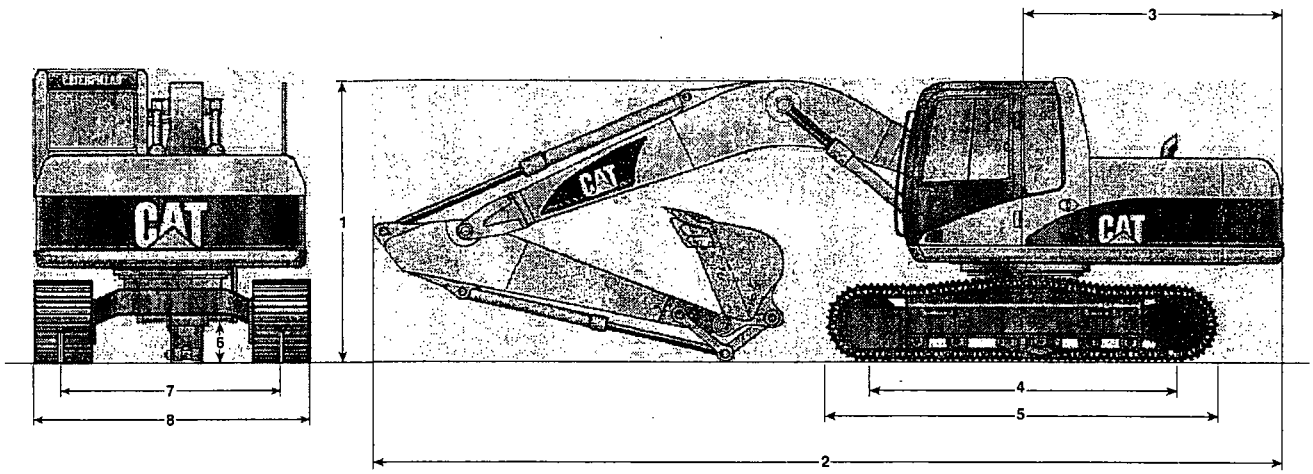

		2250 mm (7'5") Stick	2600 mm (8'6") Stick	3100 mm (10'2") Stick
1	Shipping height	2880 mm (9'5")	2880 mm (9'5")	2990 mm (9'10")
2	Shipping length	8470 mm (27'10")	8500 mm (27'11")	8520 mm (28'0")
3	Tail swing radius	2450 mm (8'0")	2450 mm (8'0")	2450 mm (8'0")
4	Length to centers of rollers			
	315C	2880 mm (9'5")	2880 mm (9'5")	2880 mm (9'5")
	315C L	3170 mm (10'5")	3170 mm (10'5")	3170 mm (10'5")
5	Track length			
	315C	3690 mm (12'1")	3690 mm (12'1")	3690 mm (12'1")
	315C L	3970 mm (13'0")	3970 mm (13'0")	3970 mm (13'0")
6	Ground clearance	460 mm (18")	460 mm (18")	460 mm (18")
7	Track gauge	1990 mm (6'6")	1990 mm (6'6")	1990 mm (6'6")
8	Transport width	with 500 mm (20") 2490 mm (8'2")	with 600 mm (24") 2590 mm (8'6")	with 700 mm (28") 2690 mm (8'10")

Operating Weights

Caterpillar designed and built track-type undercarriage.

Track Width		Operating Weight (Short Stick)	Operating Weight (Medium Stick)	Operating Weight (Long Stick)
315C	500 mm (20") triple grouser	16 100 kg (35,500 lb)	16 090 kg (35,470 lb)	16 170 kg (35,650 lb)
	600 mm (24") triple grouser	16 320 kg (35,980 lb)	16 310 kg (35,960 lb)	16 400 kg (36,160 lb)
	700 mm (28") triple grouser	16 520 kg (36,420 lb)	16 510 kg (36,400 lb)	16 600 kg (36,600 lb)
315C L	500 mm (20") triple grouser	16 430 kg (36,220 lb)	16 470 kg (36,310 lb)	16 510 kg (36,400 lb)
	600 mm (24") triple grouser	16 680 kg (36,770 lb)	16 710 kg (36,840 lb)	16 750 kg (36,930 lb)
	700 mm (28") triple grouser	16 890 kg (37,240 lb)	16 920 kg (37,300 lb)	16 970 kg (37,410 lb)

Undercarriage

Caterpillar designed and built track-type undercarriage.

Track Width	Ground Pressure	
	315C	315C L
500 mm (20") triple grouser	50 kPa (7.25 psi)	47 kPa (6.82 psi)
600 mm (24") triple grouser	42 kPa (6.10 psi)	39 kPa (5.66 psi)
700 mm (28") triple grouser	36 kPa (5.22 psi)	34 kPa (4.93 psi)

UNCONSOLIDATED/UNDRAINED COMPRESSIVE STRENGTH
ASTM D 2850

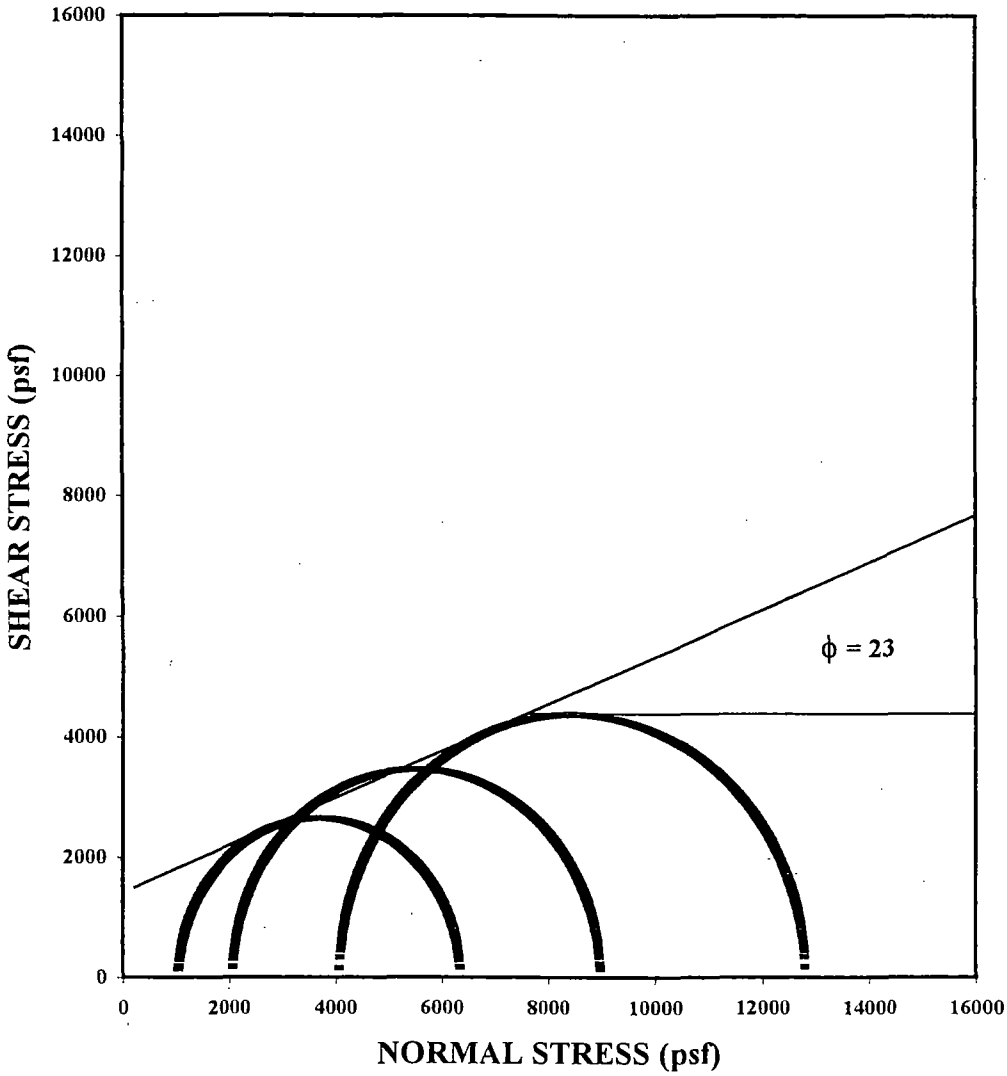

SAMPLE #:	GB-10 (14'-16')
DESCRIPTION:	Dark gray Fines, some f sand, trace gravel

CONFINING PRES(psi)	7.0	14.0	27.9
MOIST DENSITY(pcf)	133.93	133.93	133.93
% MOISTURE	17.84%	17.84%	17.84%
STRAIN RATE(%/min)	1.00	1.00	1.00

c (psf):	1440
ϕ:	23

DATE	12/21/00
TECH	JMP
REVIEW	RMW

CSDG/REMEDIAL DESIGN SERVICES/PA
003-6000

GOLDER ASSOCIATES INC.
CHERRY HILL, NEW JERSEY

UNCONSOLIDATED/UNDRAINED COMPRESSIVE STRENGTH
ASTM D 2850

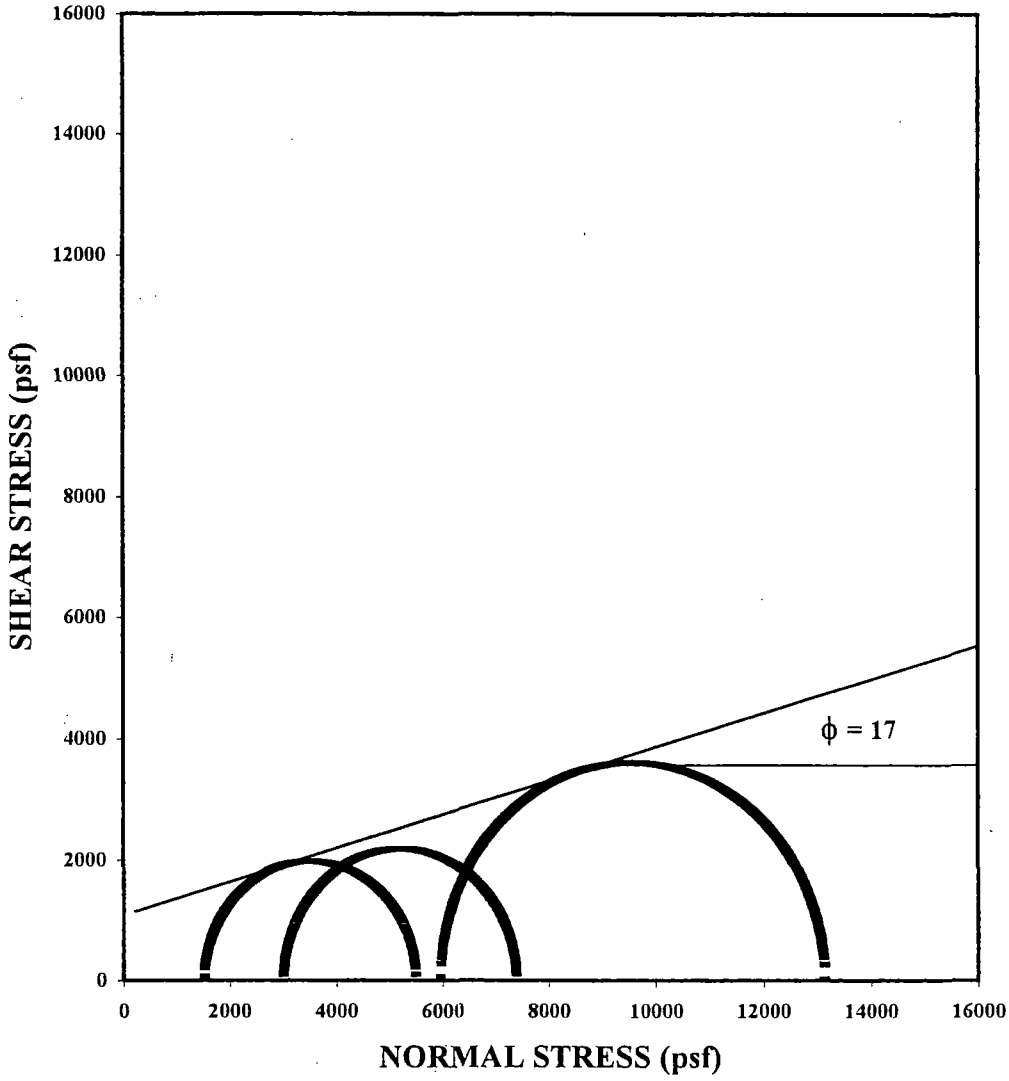

SAMPLE #:	GB-10 (20'-22')
DESCRIPTION:	Dark gray Fines, some f sand, trace gravel

CONFINING PRES(psi)	10.2	20.5	40.9
MOIST DENSITY(pcf)	135.42	131.57	137.56
% MOISTURE	15.82%	17.11%	14.33%
STRAIN RATE(%/min)	1.00	1.00	0.99

c (psf):	1059
ϕ:	17

DATE	12/18/00
TECH	JMP
REVIEW	RMW

CSDG/REMEDIAL DESIGN SERVICES/PA
003-6000

GOLDER ASSOCIATES INC.
CHERRY HILL, NEW JERSEY

UNCONSOLIDATED/UNDRAINED COMPRESSIVE STRENGTH
ASTM D 2850

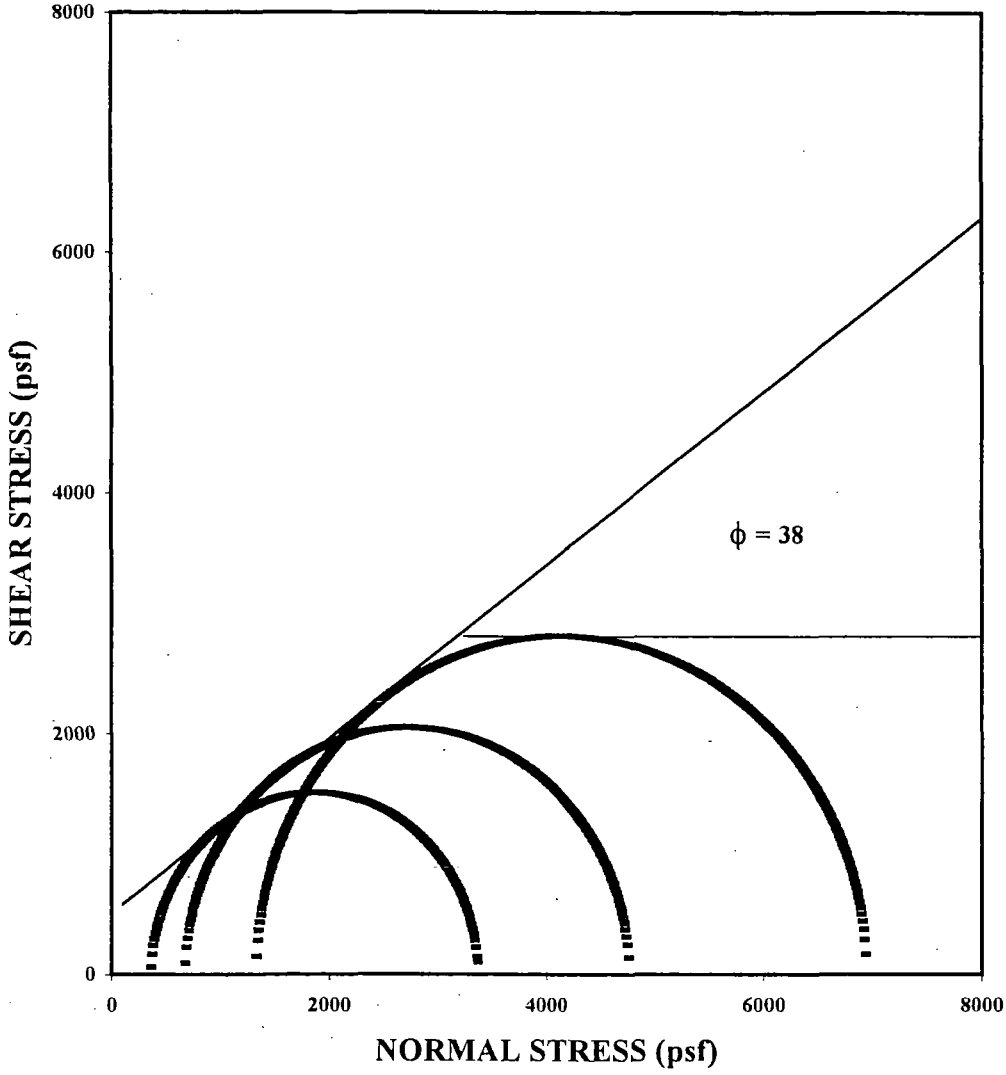

SAMPLE #:	GB-10 (4'-6')
DESCRIPTION:	Dark gray Fines, some f sand, trace gravel

CONFINING PRES(psi)	2.3	4.5	9.0
MOIST DENSITY(pcf)	129.97	129.97	129.97
% MOISTURE	12.91%	12.91%	12.91%
STRAIN RATE(%/min)	1.03	1.03	1.03

c (psf):	520
ϕ:	38

DATE	12/21/00
TECH	JMP
REVIEW	RMW

CSDG/REMEDIAL DESIGN SERVICES/PA
003-6000

GOLDER ASSOCIATES INC.
CHERRY HILL, NEW JERSEY

APPENDIX A6

PIPE SIZING CALCULATIONS

Associates

SUBJECT Worst-Case Pressure Drop Calculation		
Job No. Ref. 003-6000	Made by BJS Checked DNB Reviewed BJE	Date 6/17/04 Sheet 1 of 4

Assumptions: ① Worst Case Analysis

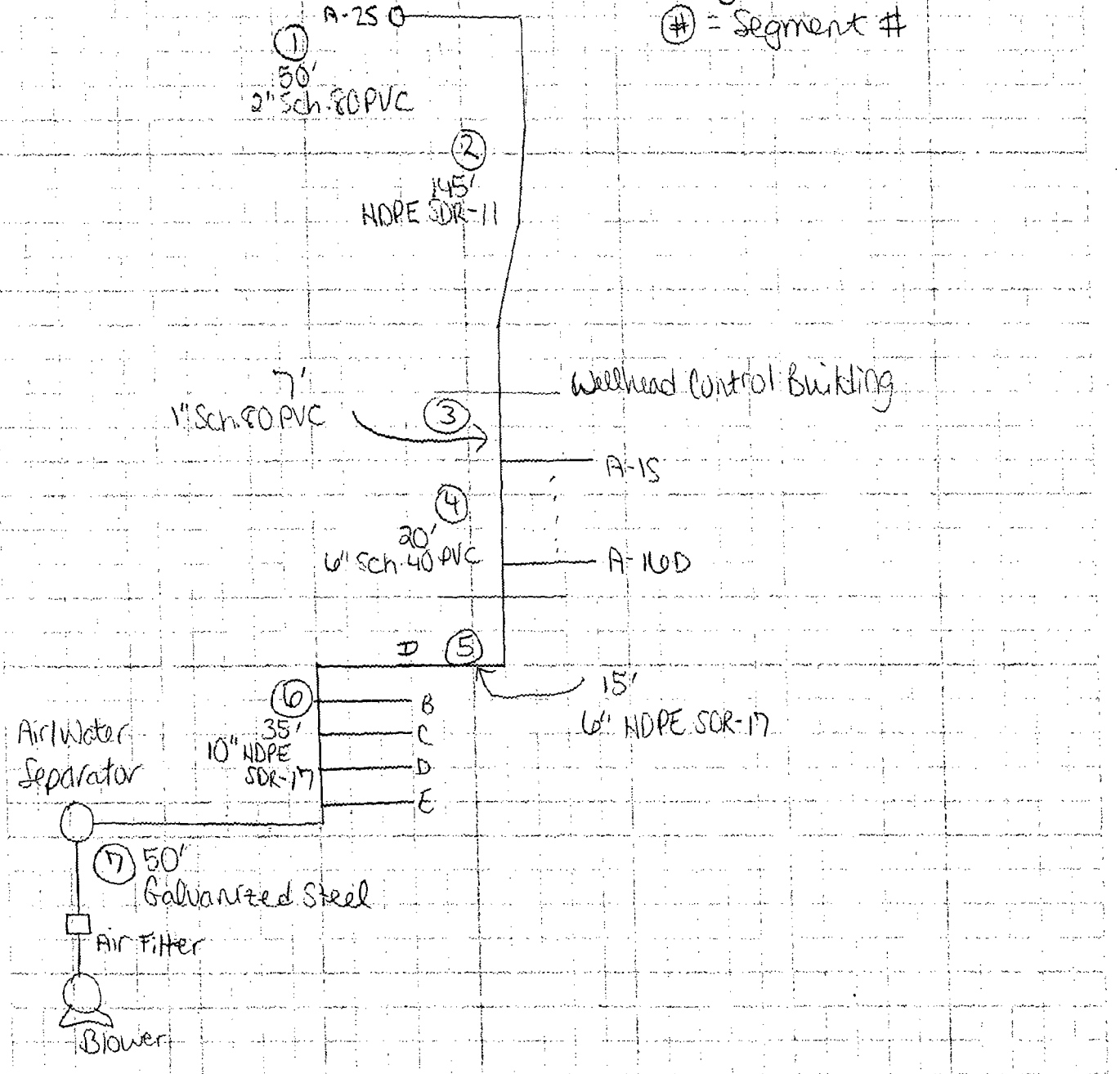

(#) = Segment #

(2) The expected vapor flow rate for each SVE well is 10 cfm, based on the pilot study. For a worst-case analysis, assume the expected flow rate for each SVE well is 30 cfm.

There are 49 wells in the SVE system, so the worst case total flow rate for the system is: 49 wells x 30 cfm

③ Assume elevation changes are negligible.

The head loss in each segment is calculated using the Darcy-Weisbach equation. The head loss in each segment is added together to determine the total head loss in the system.

See the attached spreadsheet for head loss calculations.

For all calculation checks, use segment #4.
Column numbers are shown on the attached spreadsheet.

Density (ρ) = 0.075 lb/ft^3 ; Crane Technical Paper No. 410

Absolute Viscosity (μ) = 1.21×10^{-5} lb/ft·s ; Crane Technical Paper No. 410

Column ① Cross Sectional Area

6" Sch. 40 PVC pipe has inner diameter of 6.031"

$$\text{x-sec. area} = \frac{\pi \left(\frac{6.031''}{1} \middle| \frac{1'}{12''} \right)^2}{4} = 0.1984 \text{ ft}^2$$

Column ② Velocity (v)

$$V = \frac{480 \text{ ft}^3}{\text{min}} \times \frac{1}{0.1984 \text{ ft}^2} \times \frac{1 \text{ min}}{60 \text{ sec.}} = 40.33 \text{ ft/sec.}$$

Column ③ Reynold's Number (NRe)

$$N_{Re} = \frac{\rho V D}{\mu} = \frac{0.075 \text{ lb}}{\text{ft}^3} \Big| \frac{40.33 \text{ ft}}{1 \text{ sec}} \Big| \frac{6.031 \text{ in.}}{1} \Big| \frac{1 \text{ Ft.}}{12 \text{ in}} \Big| \frac{\text{ft·sec}}{1.21 \times 10^{-5} \text{ lb}}$$

N_{Re} = 125,636

This NRe does not match the value in column ③ of the spreadsheet because it was calculated with rounded values of velocity (column ②) and viscosity. If it was recalculated without any rounding, NRe = 125,727.

Column ④ Friction Factor (f)

$$f = \frac{0.25}{\left[\log\left(\frac{\varepsilon/D}{3.7} + \frac{5.74}{Nre^{0.9}}\right)\right]^2}$$, $\varepsilon = 6.6\times10^{-7}$ ft for Sch. 40 PVC ← Relative roughness factor

$$\frac{\varepsilon}{D} = \frac{6.6\times10^{-7}\ ft}{6.031\ in} \times \frac{12\ in}{1\ ft} = 1.313\times10^{-6}$$

$$f = \frac{0.25}{\left[\log\left(\frac{1.313\times10^{-6}}{3.7} + \frac{5.74}{125,727^{0.9}}\right)\right]^2} = 0.0170$$

Column ⑤ Equivalent Pipe Length (Le)

Le = (#running tees · 20 + #branch tees · 50 + #enlargements/reductions · 15 + #elbows · 30 + #control valves · 30) · inner D

$$Le = [(16\cdot20) + (1\cdot15) + (2\cdot30)] \times \left(\frac{6.031\ in}{12\ in}\ \middle|\ \frac{1\ ft}{}\right) = 198.5\ ft.$$

Column ⑥ Total Equivalent Pipe Length (L+Le)

L+Le = 20 ft. + 198.5 ft = 218.5 ft.

Column ⑦ Total Loss in. w.c.

Use Darcy-Weisbach Eqn.: $\Delta P = \frac{\rho f (L+Le) v^2}{144 \cdot D \cdot 2g} \cdot 27.7$

$$\Delta P = \frac{\left(\frac{0.07516\ lb}{ft^3}\right)(0.0170)(218.5\ ft)\left(\frac{40.33\ ft}{sec}\right)^2 (27.7)}{(144)\left(\frac{6.031\ in}{12\ in}\ \middle|\ \frac{ft}{}\right)(2)\left(32.2\ \frac{lb}{(ft\cdot lbf)(s^2)}\right)}$$

27.7 is a factor to convert from ΔP in psi to inches w.c.

ΔP = 2.693 in. w.c. (Discrepancy due to rounding)

(Spreadsheet) ΔP = 2.7 in w.c.

Golder Associates

SUBJECT	Worst-Case Pressure Drop Calculation	
Job No. Ref. 003-6000	Made by BJS Checked DNB Reviewed BGR	Date 6/17/04 Sheet 4 of 4

Column (8) Total Loss (in. Hg)

use conversion factor: $\frac{1 \text{ in. W.C.}}{0.0735 \text{ in. Hg}}$

$\Delta P = 2.7 \text{ in. W.C.} \times \frac{0.0735 \text{ in. Hg}}{\text{in. W.C.}} = 0.1985 \text{ in. Hg.}$

HDPE SDR 11

NOMINAL DIA	OUTSIDE DIA	WALL	INSIDE DIA
1	1.315	0.120	1.075
1.5	1.900	0.173	1.554
2	2.375	0.216	1.943
3	3.500	0.318	2.864
4	4.500	0.409	3.682
5	5.563	0.506	4.551
6	6.625	0.602	5.421
7	7.125	0.648	5.829
8	8.625	0.784	7.057
10	10.750	0.977	8.796
12	12.750	1.159	10.432

DENSITY	0.075 lb/ft^3	Crane Technical Paper No. 410
ABS VISCOSITY	1.21E-05 lb/ft-s	Crane Technical Paper No. 410
E (ROUGHNESS)	7.00E-05 ft	Driscopipe 1000 Series

PVC Sch. 80

NOMINAL DIA	OUTSIDE DIA	WALL	INSIDE DIA
1	1.315	0.179	0.935
1.5	1.900	0.200	1.476
2	2.375	0.218	1.913
3	3.500	0.300	2.864
4	4.500	0.337	3.786
5	5.563	0.375	4.767
6	6.625	0.432	5.709
7	—	—	—
8	8.625	0.500	7.565
10	10.750	0.593	9.492
12	12.750	0.687	11.294

DENSITY	0.075 lb/ft^3	Crane Technical Paper No. 410
ABS VISCOSITY	1.21E-05 lb/ft-s	Crane Technical Paper No. 410
E (ROUGHNESS)	6.60E-07 ft	Piping and the Energy Balance*

Galvanized Steel Sch. 40

NOMINAL DIA	OUTSIDE DIA	WALL	INSIDE DIA
1	1.315	0.133	1.049
1.5	1.900	0.145	1.610
2	2.375	0.154	2.067
3	3.500	0.216	3.068
4	4.500	0.237	4.026
5	5.563	0.258	5.047
6	6.625	0.280	6.056
7	—	—	—
8	8.625	0.322	7.981
10	10.750	0.365	10.020
12	12.750	0.375	12.000

DENSITY	0.075 lb/ft^3	Crane Technical Paper No. 410
ABS VISCOSITY	1.21E-05 lb/ft-s	Crane Technical Paper No. 410
E (ROUGHNESS)	3.00E-04 ft	HPAC Engineering Data Digest

HDPE SDR 17

NOMINAL DIA	OUTSIDE DIA	WALL	INSIDE DIA
2	2.375	0.140	2.095
3	3.500	0.206	3.088
4	4.500	0.265	3.970
5	5.563	0.327	4.909
6	6.625	0.390	5.845
7	7.125	0.419	6.287
8	8.625	0.507	7.611
10	10.750	0.632	9.486
12	12.750	0.750	11.250
13	13.386	0.787	11.812
14	14.000	0.824	12.352

DENSITY	0.075 lb/ft^3	Crane Technical Paper No. 410
ABS VISCOSITY	1.21E-05 lb/ft-s	Crane Technical Paper No. 410
E (ROUGHNESS)	7.00E-05 ft	Driscopipe 1000 Series

PVC Sch. 40

NOMINAL DIA	OUTSIDE DIA	WALL	INSIDE DIA
1	1.315	0.133	1.029
1.5	1.900	0.145	1.590
2	2.375	0.154	2.047
3	3.500	0.216	3.042
4	4.500	0.237	3.998
5	5.563	0.258	5.016
6	6.625	0.280	6.031
7	—	—	—
8	8.625	0.322	7.942
10	10.750	0.365	9.976
12	12.750	0.406	11.889

DENSITY	0.075 lb/ft^3	Crane Technical Paper No. 410
ABS VISCOSITY	1.21E-05 lb/ft-s	Crane Technical Paper No. 410
E (ROUGHNESS)	6.60E-07 ft	Piping and the Energy Balance*

								(1)	(2)	(3)	(4)					(5)	(6)	(7)	(8)
SEGMENT #	TOTAL VAPOR FLOW RATE (cfm) SEGMENT	TOTAL VAPOR FLOW RATE (cfm) HEADER	PIPE LENGTH L (ft)	PIPE MATERIAL	NOMINAL DIAMETER (in)	ID (in) (in)	X-SEC. AREA (sq ft)	VELOCITY (fps)	N Re	f	RUNNING TEE	BRANCH TEE	ELARGEMENT / REDUCTION	90 DEGREE ELL	CONTROL VALVE	EQUIV. PIPE LENGTH Le (ft)	TOTAL EQUIV. PIPE LENGTH L+Le (ft)	TOTAL LOSS (In W. C.)	TOTAL LOSS (in Hg)
1 (Well)	30	30	50	SCH. 80 PVC	2	1.913	0.0200	25.05	24,773	0.0245		1		2		17.5	67.5	1.459	0.1072
2	0	30	145	HDPE SDR-11	2	1.943	0.0206	24.28	24,391	0.0257			1	4		21.9	166.9	3.502	0.2574
3	0	30	7	SCH. 80 PVC	1	0.935	0.0048	104.86	50,686	0.0207			1	1	1	5.8	12.8	13.419	0.9863
4	450	480	20	SCH. 40 PVC	6	6.031	0.1984	40.33	125,727	0.0170	16		1	2		198.5	218.5	2.700	0.1985
5	0	480	15	HDPE SDR-17	6	5.845	0.1863	42.93	129,728	0.0179			1	2	1	51.1	66.1	1.003	0.0737
6	990	1470	35	HDPE SDR-17	10	9.486	0.4908	49.92	244,799	0.0158	5		1	2		138.3	173.3	1.933	0.1421
7	0	1470	50	G.S.	10	10.020	0.5476	44.74	231,753	0.0179				5		125.3	175.3	7.683	0.5647
																		31.698	2.330

Notes:

1) Segment #'s are shown on A-2S Pipe Sizing Calculation Check in Appendix A.
2) Pressure drop of 5 in W.C. across full port valve accounted for in Segment # 3.
3) Pressure drop of 3 in. W.C. across air filter accounted for in Segment # 7.
4) Pressure drop of 3 in. W.C. across air/water separator accounted for in Segment # 7.

* Greeff, Isabella L. *Piping and the Energy Balance: A guide to calculation of pressure loss, flowrate and diameter*. www.chemicalprocessing.com. September 1, 1999.

125635.45

APPENDIX A7

FLOW COMPARISON FOR DIFFERENT WELL SCREEN LENGTHS

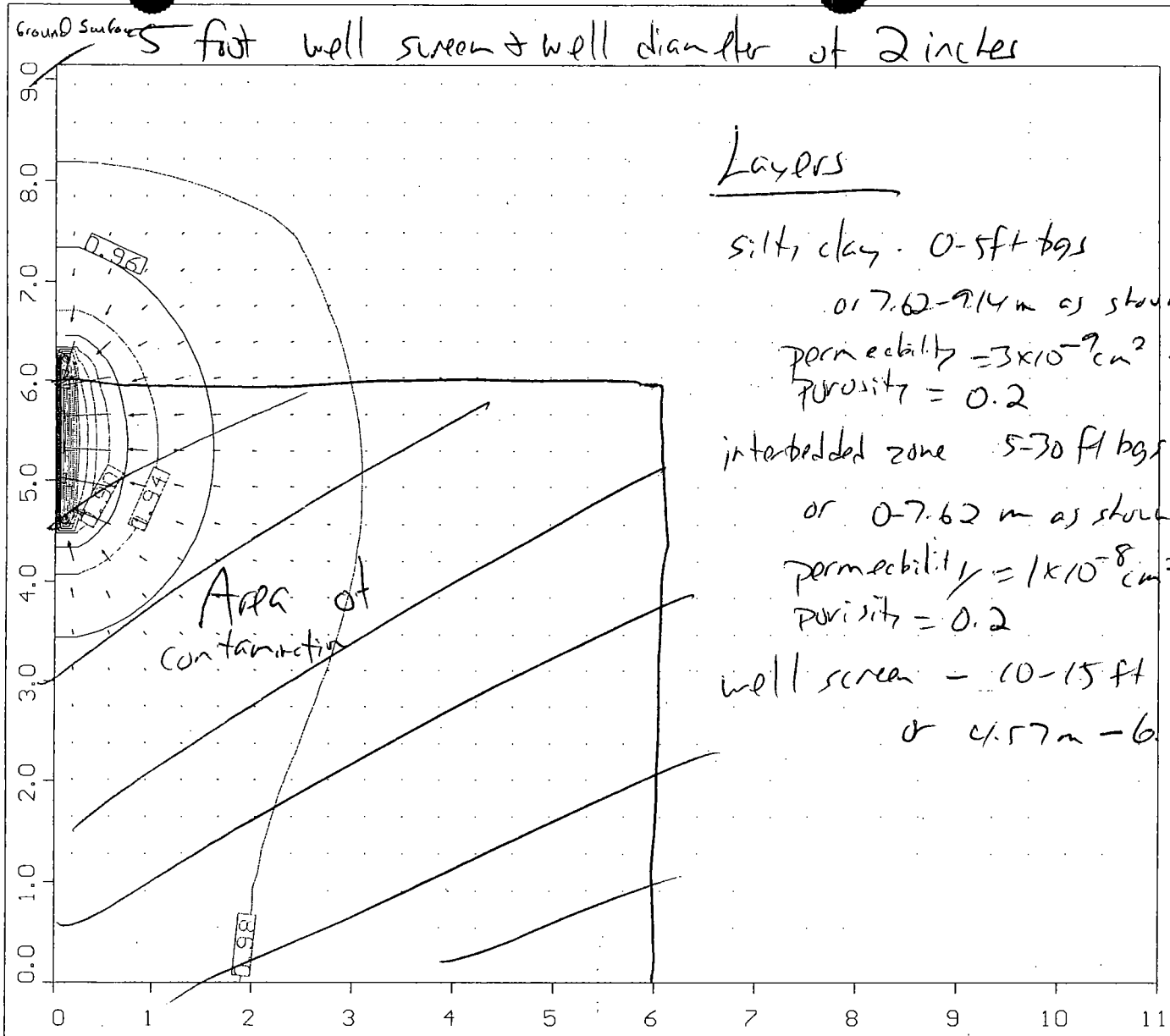

5 foot well screen & well diameter of 2 inches

Layers

silty clay - 0-5ft bgs

or 7.62-9.14m as shown on model

permeability = $3 \times 10^{-9} cm^2$ = 0.312 darcy

porosity = 0.2

interbedded zone 5-30 ft bgs

or 0-7.62 m as shown on model

permeability = $1 \times 10^{-8} cm^2$ = 1.04 darcy

porosity = 0.2

well screen - 10-15 ft bgs

or 4.57m - 6.09m as shown on model

AIRFLOW/SVE

Copyright 1989-1996

waterloo hydrogeologic software

Model Dimensions

No. rows : 50

No. columns : 50

Pressure (atm) well head vacuum of 12 in H2O

Min : 0.600

Max : 1.000

Velocities (m/d)

Data Set : MALVERN

Graph 1

Graph 2

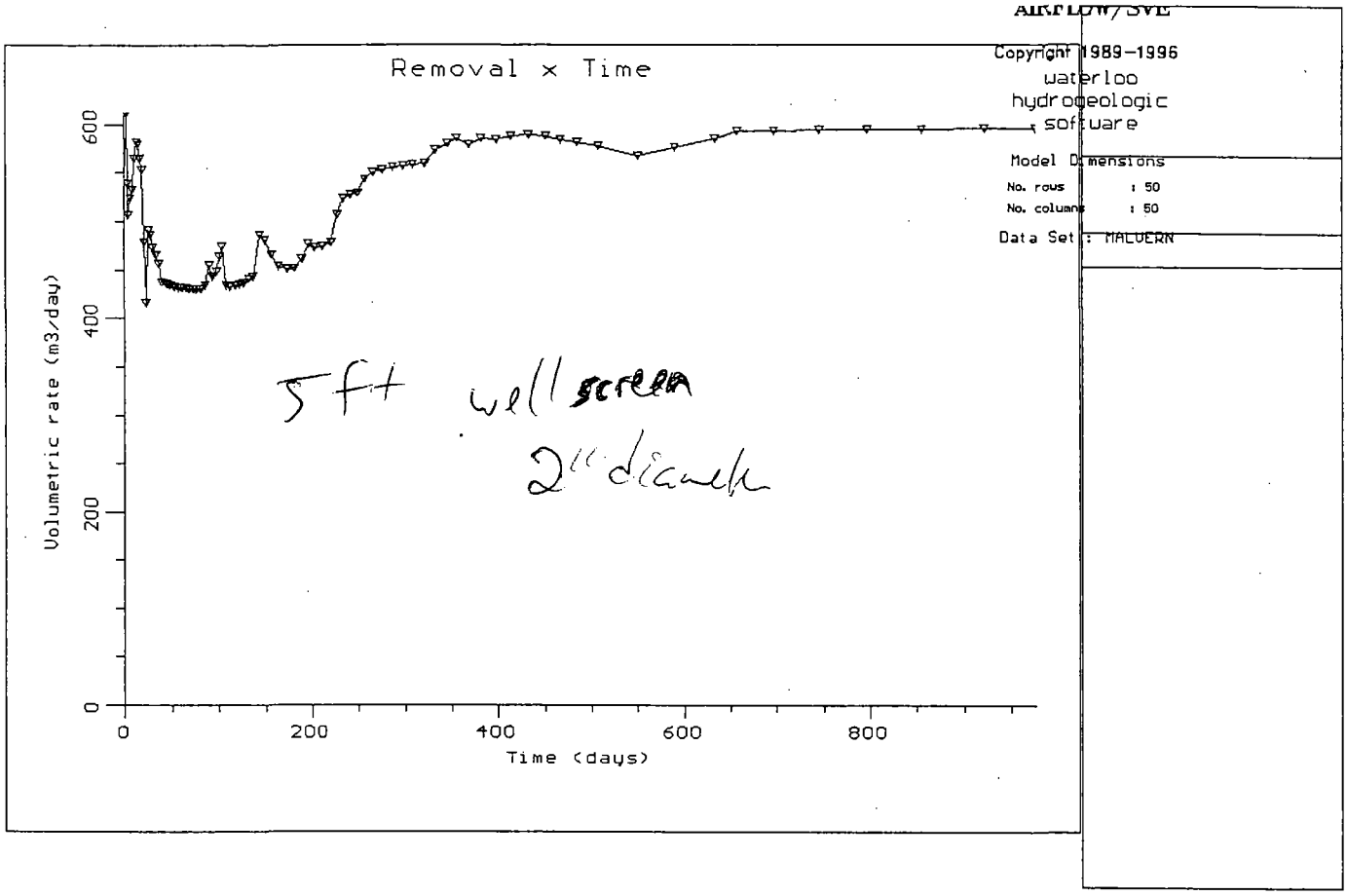
AIRFLOW/SVE
Copyright 1989-1996
waterloo
hydrogeologic
software
Model Dimensions
No. rows : 50
No. columns : 50
Data Set : MALVERN
Removal x Time
Volumetric rate (m3/day)
0
200
400
600
0
200
400
600
800
Time (days)
5 ft well screen
2" diameter

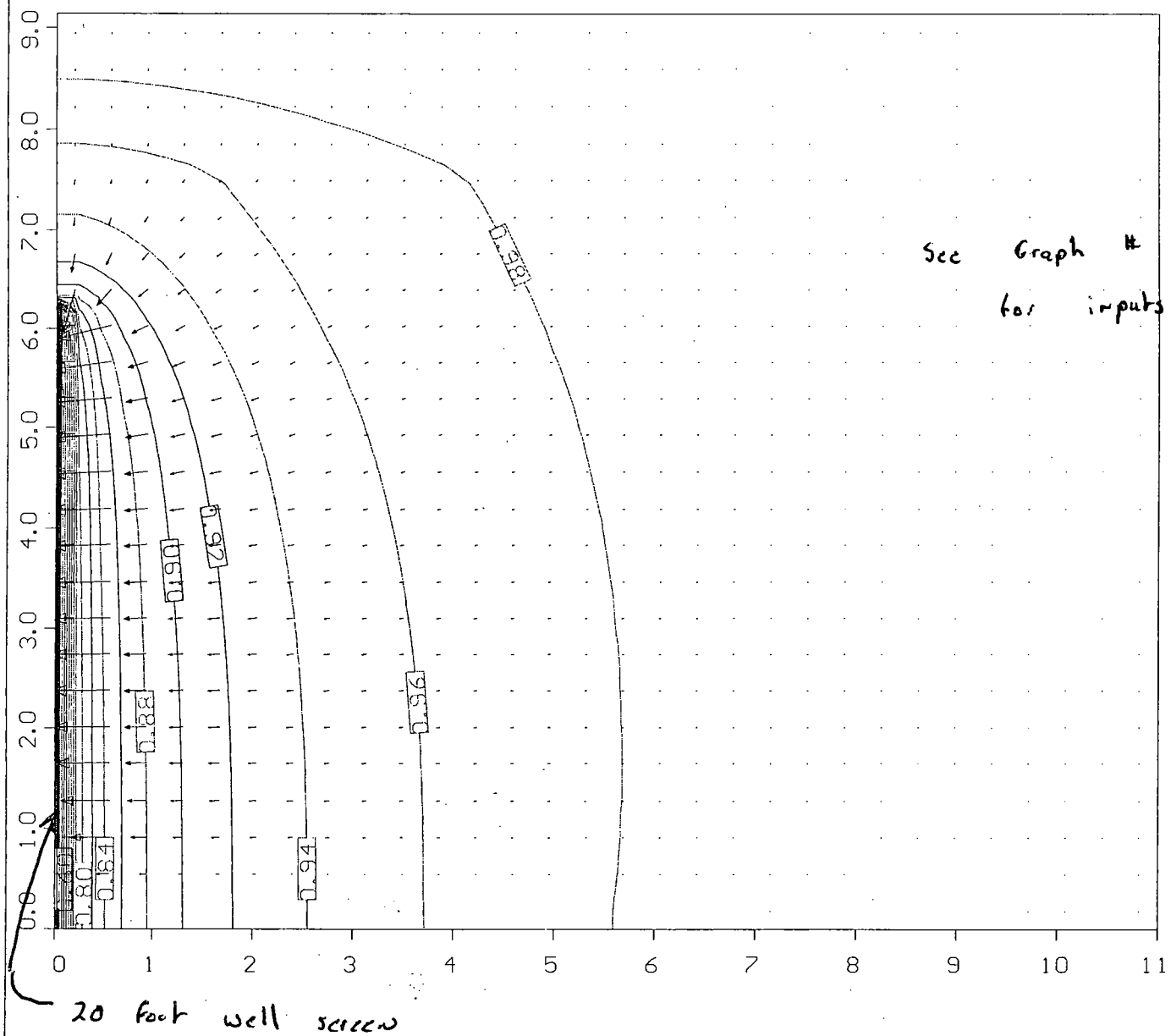

AIRFLOW/SVE

Copyright 1989-1996

waterloo hydrogeologic software

Model Dimensions

No. rows : 50

No. columns : 50

Pressure (atm)

Min : 0.600

Max : 1.000

Velocities (m/d)

Data Set : MALVERN

Graph 3

Graph 4

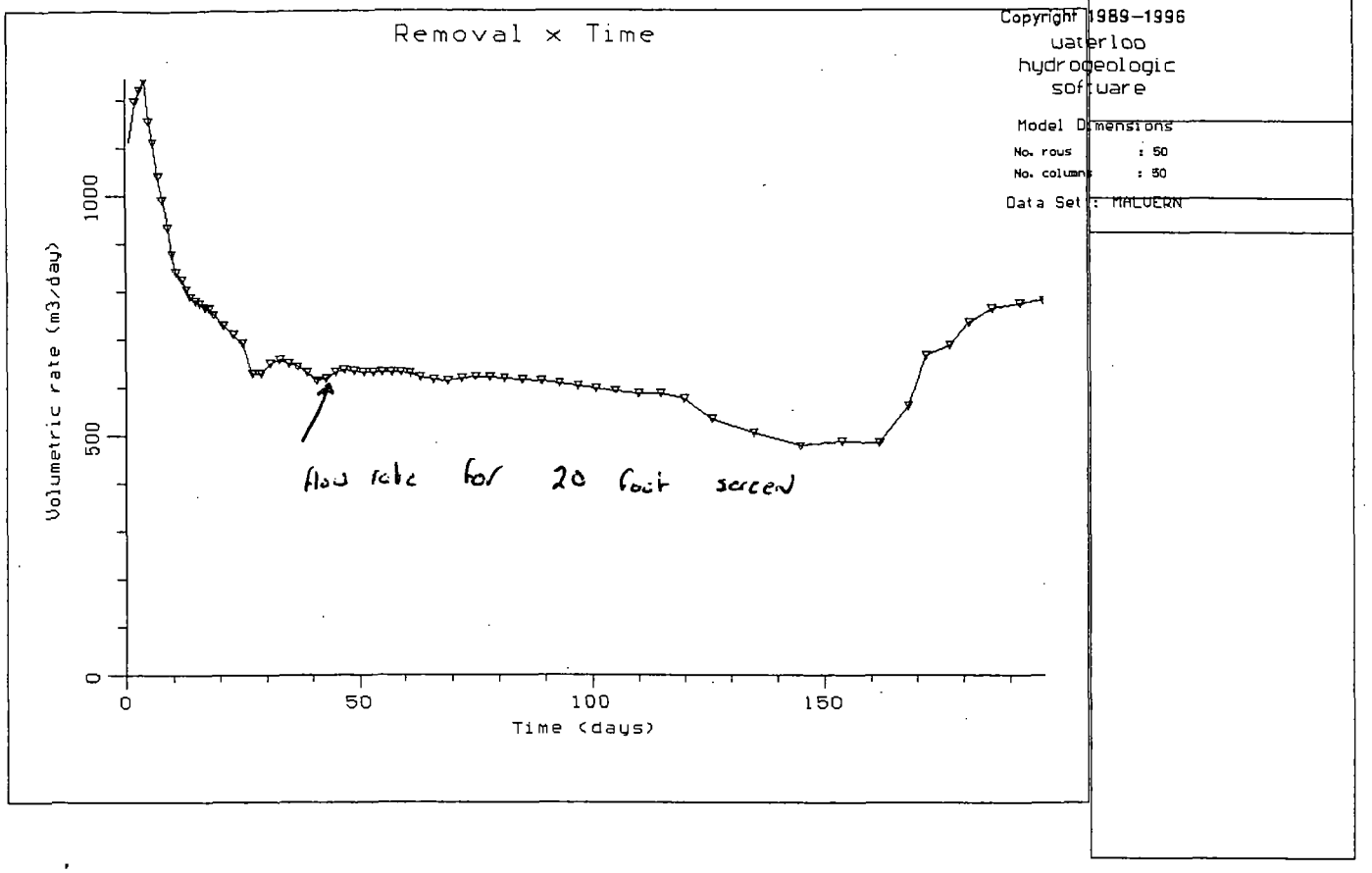
Removal x Time
AIRFLOW/SVE
Copyright 1989-1996
waterloo
hydrogeologic
software
Model Dimensions
No. rows : 50
No. columns : 50
Data Set : MALVERN
Volumetric rate (m3/day)
0
500
1000
0
50
100
150
Time (days)
flow rate for 20 foot screen

APPENDIX B

MPA CAP REMEDY CALCULATIONS

ATTACHMENT B1

EVALUATION OF EROSION POTENTIAL

GOLDER ASSOCIATES	Subject: SOIL LOSS CALCULATION		
	Job No: 003-6000	Made by: RAD	Date: 11/17/03
	Ref: MPA	Checked by: CBM	Revised:
		Reviewed by: BJF	Sheet: 1 of 7

OBJECTIVE: To evaluate soil erosion potential for MPA cap for the proposed final cover grading plan.

METHOD: Per Reference 2, use the Universal Soil Loss Equation (USLE) to estimate the average annual soil loss.
USLE is A = R K (LS) C P

Where,
A = average annual soil loss (tons/acre/year)
R = rainfall and runoff erosivity index
K = soil erodibility factor (tons/acre)
L = slope-length factor
S = slope-steepness factor
C = cover management practice
P = crop practice factor

REFERENCES:

1) USEPA, "Evaluating Cover Systems for Solid and Hazardous Waste," dated ~~September 2002~~. 1982

2) Golder Associates Inc., "Proposed Final Cover Grading Plan, Figure 4-1," dated November 2003.

3) Commonwealth of Pennsylvania, Department of Environmental Protection Office of Water Management, "Erosion and Sediment Pollution Control Manual," dated March 2000.

CALCULATIONS: 1) The following constants have been used for all calculations:

A = R K (LS) C P

Where,
R = 175 (Ref. 1, Sheet 2 of 7)
K = 0.43 (Ref. 3, Sheets 3 and 4 of 7)
C = 0.01 (Ref. 1, Sheet 5 of 7, Meadow – grass & legume mix)
P = 1.0 (Ref. 1, Sheet 6 of 7, No support practice)
LS = 0.28 (Ref. 1, Sheet 7 of 7) *
* LS determination is based on a slope of 2.5% and continuous length of 150 feet.

The value of (A) solved for to determine the average soil loss (tons/acre/year) for the MPA cap.
A = (175)(0.43)(0.28)(0.01)(1.0)
A = 0.2107 tons/acre/year

CONCLUSION: This calculation indicates that the design meets the criteria that the amount of soil loss from erosion is less than the allowable maximum amount of 2 tons/acre/year.

Not only is erosion objectionable in itself but erosion can degrade the water and seriously reduce its effectiveness.

Evaluate Erosion Potential — Step 19

The USDA universal soil loss equation (USLE) is a convenient tool for use in evaluating erosion potential. The USLE predicts average annual soil loss as the product of six quantifiable factors. The equation is:

$$A = R\ K\ L\ S\ C\ P$$

where A = average annual soil loss, in tons/acre
R = rainfall and runoff erosivity index
K = soil erodibility factor, tons/acre
L = slope-length factor
S = slope-steepness factor
C = cover-management factor
P = practice factor

The data necessary as input to this equation are available to the evaluator in a figure and tables included below. Note that the evaluations in Step 8 on soil composition and Steps 25-32 on vegetation all impact on the evaluation of erosion also.

Factor R in the USLE can be calculated empirically from climatological data. For average annual soil loss determinations, however, R can be obtained directly from Figure 20. Factor K, the average soil loss for a given

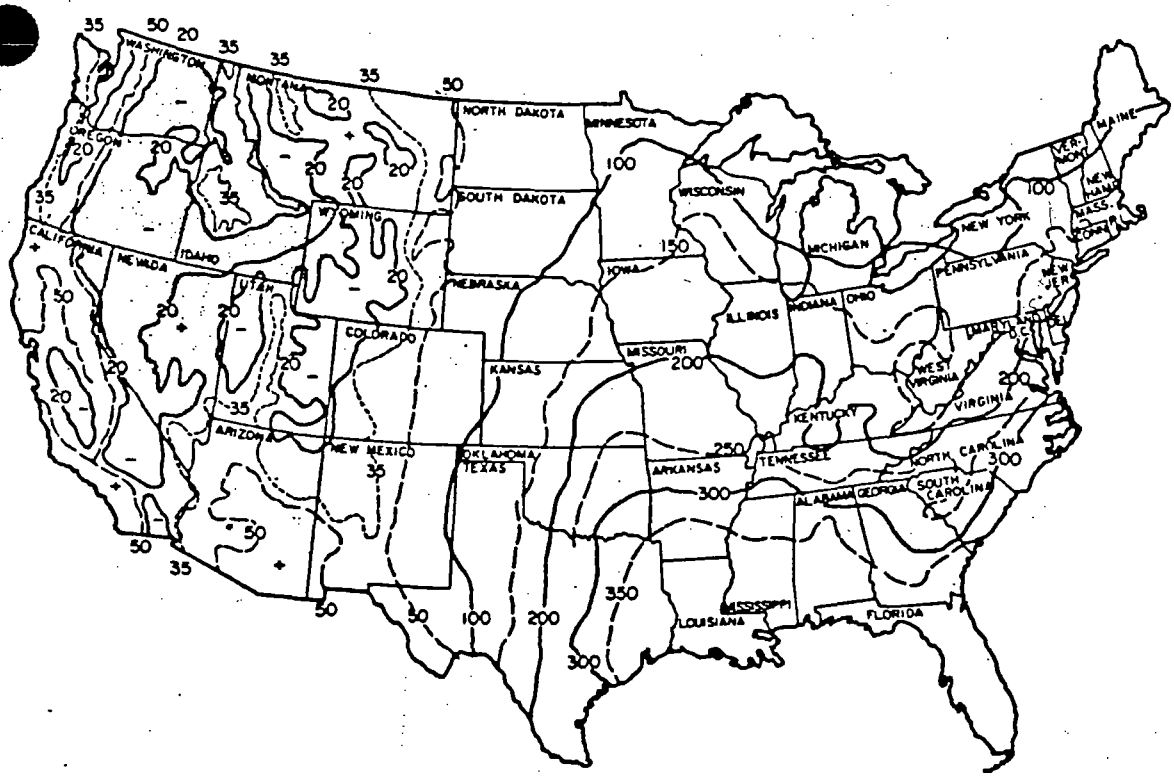

Figure 20. Average annual values of rainfall-erosivity factor R.[11]

TABLE 5
Erodible Soils in Pennsylvania*

Series*	Texture	K
Abbottstown	Loam, Silty Loam	.43
Aldino	Silt, Silt Loam	.43
Allis	Silt Loam, Silty Clay Loam	.43
Baile	Silt Loam, Loam, Silty Clay Loam	.43
Bedford	Silt Loam	.43
Beltsville	Silt Loam, Loam	.43
Birdsall	Silt Loam, Very Fine Silt Loam	.49
Blairton	Silt Loam, Loam	.43
Brooke	Silty Clay Loam, Clay Loam, Silty Clay	.43
Butlertown	Silt Loam, Loam, very fine sandy Loam	.43
Cambridge	Silt Loam, Loam	.43
Cambridge	Gravelly Silt Loam, Gravelly Loam	.43
Canadice	Silty Clay Loam, Silt Loam	.49
Caneadea	Silt Loam, Silty Clay Loam	.43
Captina	Silt Loam	.43
Chalfont	Silt Loam	.49
Conowingo	Silt Loam, Silty Clay Loam	.43
Croton	Silt Loam, Silty Clay Loam	.43
Dalton	Silt Loam, Very Fine Sandy Loam	.49
Dormont	Silt Loam	.43
Doylestown	Silt Loam, Silty Clay Loam	.43
Ernest	Silt Loam, Loam	.43
Ginat	Silt Loam, Loam	.43
Guernsey	Silt Loam, Silty Clay Loam	.43
Guthrie	Silt Loam	.43
Haven	Loam, Silt Loam, Very Fine Sandy Loam	.43
Hollinger	Silt Loam, Loam	.43
Howell	Fine Sandy Loam, Loam, Silt Loam	.43
Kanona	Silty Clay Loam, Loam, Silt Loam	.43
Kanona	Shaly Silty Clay Loam, Shaly Loam, Shaly Silt Loam	.43
Lawrence	Silt Loam	.43
Lawrenceville	Silt Loam, Loam	.43
Leadvale	Silt Loam, Loam, Fine Sandy Loam	.43
Letort	Silt Loam, Loam	.43
Lickdale	Loam, Silt Loam	.43
Mahoning	Silt Loam, Loam	.43
Manor	Loam, Silt Loam	.43
Melvin	Silt Loam, Loam, Fine Sandy Loam, Silty Clay Loam	.43
Monongahela	Fine Sandy Loam, Loam, Silt Loam	.43
Newark	Silt Loam, Loam, Silty Clay Loam	.43
Nolin	Silt Loam, Silty Clay Loam	.43
Opequon	Silt Loam	.43
Pekin	Silt Loam, Loam	.43
Penlaw	Silt Loam	.43
Pequea	Silt Loam, loam	.43

* Unlisted soils and textures have K factors $\leq$ 0.37 and are considered to be "erosion resistant."

TABLE 5
Erodible Soils in Pennsylvania*
(Continued)

Series*	Texture	K
Platea	Silt Loam	.43
Purdy	Silt Loam, Loam, Silty Clay Loam	.43
Rainsboro	Silt Loam	.43
Readington	Silt Loam, Loam	.43
Reaville	Silt Loam	.43
Rohrersville	Silty Clay Loam, Silt Loam	.43
Rowland	Silt Loam, Loam, Sandy Loam	.43
Scio	Silt Loam, Very Fine sandy Loam	.49
Steff	Silt Loam, Loam	.43
Tilsit	Silt Loam, Loam	.43
Towhee	Silt Loam	.43
Tygart	Silt Loam, Loam	.43
Tyler	Silt Loam	.43
Unadilla	Silt Loam, Very Fine sandy Loam	.49
Upshur	Silt Loam, Silty Clay Loam	.43
Urbana	Silt Loam	.43
Wallington		.49
Wamers		.43
Watchung	Silt Loam, Loam, Silty Clay Loam	.43
Watchung	V. Stony Silt Loam, v. St'y Loam, St'y Silty Clay Loam	.43
Watchung	Ex. St'y Silt Loam, Ex. St'y Loam, Ex. St'y Silty cl Loam	.43
Wayland	Silt Loam, Silty clay Loam	.43
Williamson	Silt Loam, fine sandy Loam, very fine sandy Loam	.49
Zipp	Silt Loam, Loam, Silty clay Loam	.43

* Unlisted soils and textures have K factors $\leq$ 0.37 and are considered to be "erosion resistant."

TABLE 7. GENERALIZED VALUES OF FACTOR C FOR STATES EAST OF THE ROCKY MOUNTAINS[11]

Crop, rotation, and management	Productivity level	
	High	Mod.
	C value	
Base value: continuous fallow, tilled up and down slope	1.00	1.00
CORN		
C, RdR, fall TP, conv	0.54	0.62
C, RdR, spring TP, conv	.50	.59
C, RdL, fall TP, conv	.42	.52
C, RdR, wc seeding, spring TP, conv	.40	.49
C, RdL, standing, spring TP, conv	.38	.48
C-W-M-M, RdL, TP for C, disk for W	.039	.074
C-W-M-M-M, RdL, TP for C, disk for W	.032	.061
C, no-till pl in c-k sod, 95-80% rc	.017	.053
COTTON		
Cot, conv (Western Plains)	0.42	0.49
Cot, conv (South)	.34	.40
MEADOW		
Grass & Legume mix	0.004	0.01
Alfalfa, lespedeza or Sericia	.020	
Sweet clover	.025	
SORGHUM, GRAIN (Western Plains)		
RdL, spring TP, conv	0.43	0.53
No-till pl in shredded 70-50% rc	.11	.18
SOYBEANS		
B, RdL, spring TP, conv	0.48	0.54
C-B, TP annually, conv	.43	.51
B, no-till pl	.22	.28
C-B, no-till pl, fall shred C stalks	.18	.22
WHEAT		
W-F, fall TP after W	0.38	
W-F, stubble mulch, 500 lbs rc	.32	
W-F, stubble mulch, 1000 lbs rc	.21	

Abbreviations defined:

B - soybeans
C - corn
c-k - chemically killed
conv - conventional
cot - cotton
F - fallow
M - grass & legume hay
pl - plant
W - wheat
wc - winter cover

lbs rc - pounds of crop residue per acre remaining on surface after new crop seeding
% rc - percentage of soil surface covered by residue mulch after new crop seeding
70-50% rc - 70% cover for C values in first column; 50% for second column
RdR - residues (corn stover, straw, etc.) removed or burned
RdL - all residues left on field (on surface or incorporated)
TP - turn plowed (upper 5 or more inches of soil inverted, covering residues)

are listed in Table 8. These values are based on rather limited field data, but P has a narrower range of possible values than the other five factors.

TABLE 8. VALUES OF FACTOR P[11]

Practice	Land slope (percent)				
	1.1-2	2.1-7	7.1-12	12.1-18	18.1-24
	(Factor P)				
Contouring (P_c)	0.60	0.50	0.60	0.80	0.90
Contour strip cropping (P_{sc})					
R-R-M-M[1]	0.30	0.25	0.30	0.40	0.45
R-W-M-M	0.30	0.25	0.30	0.40	0.45
R-R-W-M	0.45	0.38	0.45	0.60	0.68
R-W	0.52	0.44	0.52	0.70	0.90
R-O	0.60	0.50	0.60	0.80	0.90
Contour listing or ridge planting (P_{cl})	0.30	0.25	0.30	0.40	0.45
Contour terracing (P_t)[2]	[3] $0.6/\sqrt{n}$	$0.5/\sqrt{n}$	$0.6/\sqrt{n}$	$0.8/\sqrt{n}$	$0.9/\sqrt{n}$
No support practice	1.0	1.0	1.0	1.0	1.0

[1] R = rowcrop, W = fall-seeded grain, O = spring-seeded grain, M = meadow. The crops are grown in rotation and so arranged on the field that rowcrop strips are always separated by a meadow or winter-grain strip.

[2] These P_t values estimate the amount of soil eroded to the terrace channels and are used for conservation planning. For prediction of off-field sediment, the P_t values are multiplied by 0.2.

[3] n = number of approximately equal-length intervals into which the field slope is divided by the terraces. Tillage operations must be parallel to the terraces.

Example: An owner/operator proposes to close one section of his small landfill with a sandy clay subsoil cover having the surface configuration shown in Figure 21. The factor R has been established as 200 for this locality. The evaluator questions anticipated erosion along the steep side and assigns the following values to the other factors in the USLE after inspecting Tables 5 through 8:

K = 0.14 LS = 8.3 C = 1.00 P = 0.90

The rate of erosion for the steep slope of the landfill is calculated as follows:

A = 200 (0.14 tons/acre) (8.3) (1.00) (0.90)
= 209 tons/acre

This erosion not only exceeds a limit recommended by the permitting authority but also indicates a potential

TABLE 6. VALUES OF THE FACTOR LS FOR SPECIFIC COMBINATIONS OF SLOPE LENGTH AND STEEPNESS[11]

% Slope	Slope length (feet)											
	25	50	75	100	150	200	300	400	500	600	800	1000
0.5	0.07	0.08	0.09	0.10	0.11	0.12	0.14	0.15	0.16	0.17	0.19	0.20
1	0.09	0.10	0.12	0.13	0.15	0.16	0.18	0.20	0.21	0.22	0.24	0.26
2	0.13	0.16	0.19	0.20	0.23	0.25	0.28	0.31	0.33	0.34	0.38	0.40
3	0.19	0.23	0.26	0.29	0.33	0.35	0.40	0.44	0.47	0.49	0.54	0.57
4	0.23	0.30	0.36	0.40	0.47	0.53	0.62	0.70	0.76	0.82	0.92	1.0
5	0.27	0.38	0.46	0.54	0.66	0.76	0.93	1.1	1.2	1.3	1.5	1.7
6	0.34	0.48	0.58	0.67	0.82	0.95	1.2	1.4	1.5	1.7	1.9	2.1
8	0.50	0.70	0.86	0.99	1.2	1.4	1.7	2.0	2.2	2.4	2.8	3.1
10	0.69	0.97	1.2	1.4	1.7	1.9	2.4	2.7	3.1	3.4	3.9	4.3
12	0.90	1.3	1.6	1.8	2.2	2.6	3.1	3.6	4.0	4.4	5.1	5.7
14	1.2	1.6	2.0	2.3	2.8	3.3	4.0	4.6	5.1	5.6	6.5	7.3
16	1.4	2.0	2.5	2.8	3.5	4.0	4.9	5.7	6.4	7.0	8.0	9.0
18	1.7	2.4	3.0	3.4	4.2	4.9	6.0	6.9	7.7	8.4	9.7	11.0
20	2.0	2.9	3.5	4.1	5.0	5.8	7.1	8.2	9.1	10.0	12.0	13.0
25	3.0	4.2	5.1	5.9	7.2	8.3	10.0	12.0	13.0	14.0	17.0	19.0
30	4.0	5.6	6.9	8.0	9.7	11.0	14.0	16.0	18.0	20.0	23.0	25.0
40	6.3	9.0	11.0	13.0	16.0	18.0	22.0	25.0	28.0	31.0	--	--
50	8.9	13.0	15.0	18.0	22.0	25.0	31.0	--	--	--	--	--
60	12.0	16.0	20.0	23.0	28.0	--	--	--	--	--	--	--

Values given for slopes longer than 300 feet or steeper than 18% are extrapolations beyond the range of the research data and, therefore, less certain than the others.

overall effective LS value. If two segments are sufficient, multiply by 0.71 and 1.29.

Factor C in the USLE is the ratio of soil loss from land cropped under specified conditions to that from clean-tilled, continuous fallow. Therefore, C combines effects of vegetation, crop sequence, management, and agricultural (as opposed to engineering) erosion-control practices. On landfills, freshly covered and without vegetation or special erosion-reducing procedures of cover placement, C will usually be about unity. Where there is vegetative cover or significant amounts of gravel, roots, or plant residues or where cultural practices increase infiltration and reduce runoff velocity, C is much less than unity. Estimate C by reference to Table 7 for anticipated cover management, but also consider changes that may take place in time. Meadow values are usually most appropriate. See Reference 1 for additional guidance.

Factor P in the USLE is similar to C except that it accounts for additional erosion-reducing effects of land management practices that are superimposed on the cultural practices, e.g., contouring, terracing, and contour strip-cropping. Approximate values of P, related only to slope steepness,

APPENDIX B2

SETTLEMENT ANALYSIS

Golder Associates	SUBJECT: Malvern – Localized Subsidence		
	Job No.: 003-6000	Made by: MH/CBM	Date: 4/19/04
	Ref.: 90% Design Report	Checked: RAL	Sheet 1 of 4
		Reviewed: BGL	

OBJECTIVE: Determine the factor of safety for the strength of the geomembrane under conditions of localized subsidence beneath the geomembrane on the capped portion of the MPA.

METHOD: Assume a void with a diameter of 3 feet and a depth of 3 feet develops beneath the geomembrane. Use the method presented in Reference 1 to calculate the factor of safety.

REFERENCES:

1. "Stability and Tension Considerations Regarding Cover Soils on Geomembrane Line Slopes," Koerner and Hwu, Design and Construction of RCRA/CERCLA Final Covers/EPA/625/4-91/025, USEPA, May 1991.
2. Golder Associates, Inc., Specification, Section 02597 – Linear Low Density Polyethylene (LLDPE)

ASSUMPTIONS: As stated in the calculations.

CALCULATIONS: Attached.

CONCLUSIONS: Typical 40 mil textured geomembrane will exhibit sufficient tensile strength to perform under the assumed conditions with a factor of safety of 2.5.

Golder Associates

SUBJECT	MALVERN - LOCALIZED SUBSIDENCE		
Job No. 003-6000	Made by RAL	Date	11/17/07
Ref. 90% DESIGN	Checked	Sheet	2 of 4
	Reviewed pgr		

FROM REFERENCE 1:

$$\sigma_{Req} = \frac{2DL^2 \gamma_{CS} H_{CS}}{3\pi(D^2+L^2)}$$

Where: $\gamma_{es} = 120$ pcf

$t = 0.04$ in (40 mil)

$H_{CS} = 2$ ft

$D = 3$ ft

$L = 1.5$ ft

$$\sigma_{Req} = \frac{2(3)(1.5)^2(120)(2)}{3\left(\frac{0.04}{12}\right)(3^2+1.5^2)}$$

$\sigma_{Req} = 28,800$ psf

$\sigma_{Req} = 200$ psi

For a 40 mil LLDPE geomembrane (e.g. LLDPE Specs. data sheet attached) the stress yield is 60 lb/in width or 1500 psi.

i. if $\sigma_{ULT} = 1500$ psi

$\sigma_{allow} = \frac{1500 \text{ psi}}{3} = 500$ psi

$FS = \frac{\sigma_{allow}}{\sigma_{Req}} = \frac{500 \text{ psi}}{200 \text{ psi}} = 2.5$

Model #4: Geomembrane Tension Stresses Due to Subsidence

Whenever subsidence occurs beneath a geomembrane and it is supporting a cover soil some induced tensile stresses will occur due to out-of-plane forces from the overburden. Such subsidence is actually to be expected in closure situations above completed or abandoned landfills where the underlying waste is generally poorly compacted. The magnitude of the induced tensile stresses in the geomembrane depends upon the dimensions of the subsidence zone and on the cover soil properties.

The general scheme is shown in Figure 7 where the critical assumption is the shape of the deformed geomembrane. In the analysis which is provided in Appendix "D", the deformed shape is that of a spheroid of gradually decreasing center point along the symmetric axis of the deformed geomembrane.[9] As a worst case assumption, the geomembrane is assumed to be fixed at the circumference of the subsidence zone. The required tensile force in the geomembrane can be solved in terms of a force per unit width "T_{reqd}", or as a stress, i.e. "σ_{reqd}". The latter will be used in this analysis since it will be compared to a laboratory test method resulting in the compatible term. The necessary design equation is as follows where the specific terms are given in Figure 7.

$$\sigma_{reqd} = \frac{2\,DL^2\,\gamma_{cs}\,H_{cs}}{3\,t\,(D^2+L^2)} \qquad (8)$$

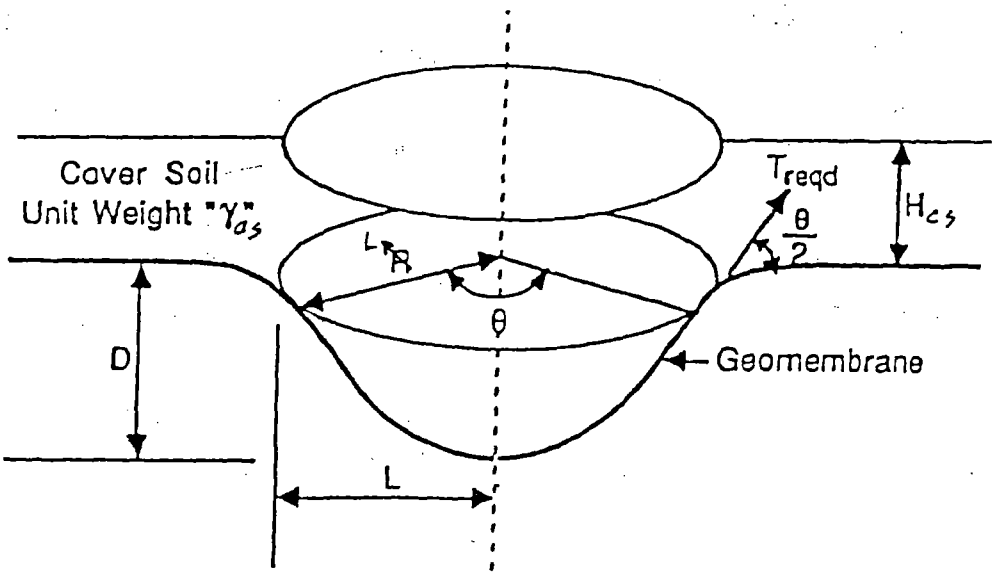

Upon calculating the value of σ_{reqd} for the site specific situation under consideration, it is compared to an appropriate laboratory simulation test. Recommended at this time is a three-dimensional, out-of-plane, tension test of the same configuration as Figure 6. It is available as GRI Test Method GM-4.[10] Thus the formulation for the final factor-of-safety becomes the following:

$$FS = \sigma_{allow}/\sigma_{reqd} \tag{7}$$

Since the value of σ_{allow} is used directly from the test method without any reduction in the form of partial factors-of-safety, relatively conservative values should be required. An example problem follows:

Example Problem: Given the same cover soil situation as in the previous example, except now a local subsidence occurs which is estimated to be 1.0 ft deep by 3.0 ft radius. The geomembrane is 40 mils thick has a σ_{allow} of 1000 lb/in^2. Determine the factor-of-safety of the geomembrane against the mobilized tensile stresses.

Solution:

$$\sigma_{reqd} = \frac{2\,DL^2\,\gamma_{cs}\,H_{cs}}{3\,t\,(D^2+L^2)}$$

$$= \frac{2\,(1.0)\,(3.0)^2\,(120)\,(3.0)}{3\,(0.040/12)\,[(1.0)^2+(3.0)^2]}$$

$$= 64{,}800\ \text{lb/ft}^2$$

$$\sigma_{reqd} = 450\ \text{lb/in}^2$$

$$FS = \sigma_{allow}/\sigma_{reqd}$$

$$= 1000/450$$

$$= 2.2, \text{ which is acceptable}$$

APPENDIX B3

WATER BALANCE EVALUATION

Golder Associates	SUBJECT: Malvern – Geocomposite Design		
	Job No.: 003-6000	Made by: RAL	Date: 11/17/03
	Ref.: 90% Design Report	Checked: MFV	Sheet 1 of 15
		Reviewed: BGE	

OBJECTIVE: To evaluate the required minimum transmissivity of the geocomposite drainage layer to adequately drain surface water infiltration.

METHOD: Methodology based on References 1 through 6 to evaluation the required minimum transmissivity of the geocomposite drainage layer. Adequate drainage of surface water infiltration is necessary to limit head build up on top of the barrier layer (reduce ponding water). The analysis considered one case, which depicts the anticipated grading as shown in Reference 7, assessed by water balance methods and a HELP Model analysis, as summarized below:

Minimum 2.5% Slopes: Considers required transmissity based on limiting the hydraulic head build-up on top of the barrier layer. This consideration is the driving design parameter for relatively flat slope where stability is not a major concern. Excessive hydraulic head build-up could induce infilitration of surface water throught the barrier layer, which is contradictory to the intent of the geosythetic cap.

Water Balance: This case is assessed using water balancing techniques under simplied unit gradient analysis (Reference 1 and 4) to determine the required ultimate transmissivity of the geocomposite drainage layer within the flatter slope.

HELP Analysis: This model considers the proposed cap configuration. Assessed using the HELP Model analysis (Reference 5) and parameters consistent with those used in the water balance analysis to determine the maximum hydraulic head build-up upon the barrier layer.

REFERENCES:

1. "The Design of Drainage Systems Over Geosynthetically Lined Slopes,: GRI Report #19, R.Koerner and T.Y. Soong, 1997.
2. "Final Covers for Solid Waste Landfills and Abandoned Dumps," R.Koerner and D. Daniel, 1997.
3. "Designing with Geosynthetics," 4th edition, R.Koerner, 1998.
4. "Design Manual of Lateral Drainage Systems for Landfills," G.N. Richardson and A. Zhao, 1999.
5. "The Hydrologic Evaluation of Landfill Performance (HELP) Model," version 3.07, USEPA, 1997.
6. "The Hydrologic Evaluation of Landfill Performance (HELP) Model – Users Guide for Version 3," USEPA, 1997.

7. "Figure 5-2 – "Proposed Final Cover Grading Plan" Intermediate Remedial Design Report.

ASSUMPTIONS:

1. Proposed geosynthetic cap configuration is as follows:

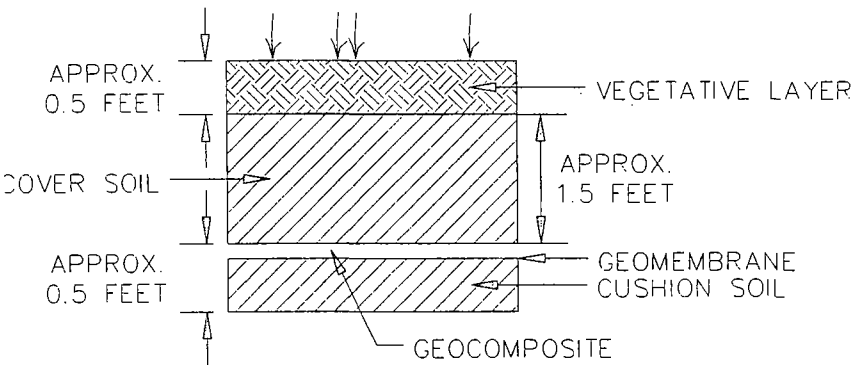

2. Minimum proposed cap slopes will not be flatter than 2.5% with corresponding slope lengths not to exceed approximately 150 feet.
3. During the lifetime of the cap, the cover soil could potentially saturate under severe or multiple precipitation events. Therefore, the methods of water balance analysis conservatively assume the hydraulic gradient is equal to one (unit gradient) which results in the rate of infiltration being equal to the cover soil hydraulic conductivity.
4. Assume 18 inches of cover soil with Unified Classification System soil classification of SC and having a hydraulic conductivity of 5.2×10^{-4} cm/sec (Reference 8).
5. Assume 6 inches of topsoil with USDA textural classification of loam, moderately compacted, and having a saturated hydraulic conductivity of 1.9×10^{-5} cm/sec (Reference 6). Since the topsoil hydraulic conductivity is lower than the cover soil, the infiltration (impingement) rate for the water balance analyses, and the runoff curve number for the HELP Model analysis, shall be based upon the topsoil properties.
6. For the HELP Model analysis, the following was assumed:
   a. Evapotranspiration, precipitation, temperature, and solar radiation were simulated by the model for the closest nearby city of Philadelphia, PA for a 20 year history
   b. The soil and geosynthetic layers comprising the proposed cap configuration were modeled as follows:

Layer No.	Material	HELP Classification*	Description
1	Topsoil	22	Default moderately compacted loam.
2	Cover Soil	7	Default fine silty loam.
3	GC	0	Modified HELP Classification No. 20with a hydraulic conductivity of 7.09 cm/sec based on the governing ultimate transmissivity.
4	GM	36	Default 40 mil low-density polyethylene GM.
5	Subgrade	7	Default fine silty loam.

* - Refer to Reference 6 for a description of the classifications.

8. As otherwise stated in the calculations.

CALCULATIONS: Attached.

DEFINITIONS:

Q_{in} = rate of surface water infiltration
Q_{out} = flow capacity of the geocomposite
k_S = hydraulic conductivity of the cover soil
k_{GC} = hydraulic conductivity of the geocomposite
L = maximum drainage length
I_n = hydraulic gradient for flow normal to slope = 1 (unit gradient)
i_S = hydraulic gradient for flow parallel to slope = $\sin\beta$
r = impingment rate = k_{TS}
β = slope angle
S = slope (in units of length/length)
t_{GC} = thickness of the geocomposite
Ψ_{req} = required geocomposite transmissivity = $(k_{GC})(t_{GC})$
Ψ_{ult} = ultimate geocomposite transmissivity
FS_{global} = overall factor-of-safety for the design*
RF_{in} = reduction factor for geotextile intrusion
RF_{cr} = reduction factor for creep
RF_{cc} = reduction factor for chemical clogging
RF_{bc} = reduction factor for biological clogging
ΠRF = $FS_{global} \times RF_{in} \times RF_{cr} \times RF_{cc} \times RF_{bc}$

*For design purposed the factor-of-safety is assumed to be 2.0.

Golder Associates	SUBJECT: Malvern – Geocomposite Design		
	Job No.: 003-6000	Made by: RAL	Date: 11/17/03
	Ref.: 90% Design Report	Checked: HH	Sheet 4 of 15
		Reviewed: RAL	

CONCLUSIONS: Based on the methodology and assumptions stated herein, an ultimate transmissivity of the geocomposite drainage layer of 2.0×10^{-3} m^2/sec is required. If during construction, slopes are proposed to be constructed at less than 2.5% or at lengths in excess of 150 feet, than this analysis would need to be revised by the Resident Engineer prior to construction.

HELP Model analysis using the prescribed soil and geosynthetic layers defined herein with a geocomposite hydraulic conductivity of 7.09 cm/sec, based on an allowable transmissivity of 3.6×10^{-4} m^2/sec, produced a maximum head build up on top of the barrier layer of 0.5 inches.

Based on available manufacture's product data sheets, a geocomposite drainage layer material with ultimate transmissivity of 2.0×10^{-3} m^2/sec c is readily available.

Golder Associates

SUBJECT Malvern - Water Balance Equation		
Job No. 003-6000 Ref. MPA	Made by RAL Checked MFH Reviewed BJE	Date 11/17/03 Sheet 5 of 15

CALCULATIONS

① $Q_{in} = Q_{out}$

where:

Q_{in} = infiltration water = $K_s \cdot L \cdot i_{in}$

K_s = Permitivity of the cover soil (1.9×10^{-5} cm/s → 1.9×10^{-7} m/s)

L = Unit width of GC for entire slope length (1.0)

i_{in} = Unit gradient = 1 when soil is saturated

$Q_{in} = K_s \cdot (\text{slope length} \times 1\text{ft}) \cdot 1$

and:

$Q_{out} = K_{gc} \cdot i_s \cdot A$

K_{gc} = Permitivity of Geocomposite

$i_s = \sin B$ where B = slope angle *

A = thickness of geocomposite · unit width = $t_{gc} \cdot 1$

so:

$Q_{out} = K_{gc} \cdot t_{gc} \cdot 1 \cdot \sin B$

and: $K_{gc} \cdot t_{gc} = \Psi_{reg}$

therefore: $Q_{out} = \Psi_{reg} \cdot \sin B$

② For design purposes a factor of safety is incorporated into the calculation:

$$TRF\, Q_{in} = Q_{out}$$

③ Resulting in $TRF(K_s \cdot L) = \Psi_{reg} \cdot \sin B$

$$\Psi_{reg} = \frac{TRF(K_s \cdot L)}{\sin B}$$

Golder Associates

SUBJECT	MALVERN - WATER BALANCE EQUATION		
Job No. 003-6000	Made by RAL	Date 11/17/03	
Ref. MDA	Checked [illegible]	Sheet 6 of 15	
	Reviewed BCG		

(4) Determine the reduction factors (πRF) contributing to the factor of safety =

$$\pi RF = FS_{global} \times RF_{in} \times RF_{CR} \times RF_{CC} \times RF_{BC}$$

Reduction Factor	RANGE	USE
RF_{in}	1.3 - 1.5	1.5
RF_{CR}	1.1 - 1.4	1.25
RF_{CC}	1.0 - 1.2	1.1
RF_{BC}	1.2 - 1.5	1.35
FS_{global}		2

$$\pi RF = 2 \times 1.5 \times 1.25 \times 1.1 \times 1.35$$

$$\pi RF = 5.57 \cong 5.6$$

(5) The maximum length of design slope is approximately 150 feet at 2.5% slope (minimum slope)

$$\psi_{ult} = \frac{5.6\,(1.9 \times 10^{-7}\ m/s \cdot 150\ ft \cdot 0.3048\ m/ft)}{\sin 1.43}$$

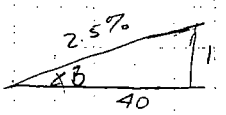

$\beta = 1.43°$

$$\psi_{ult} = 0.0019\ m^2/sec \cong 2.0 \times 10^{-3}\ m^2/sec$$

$\frac{1}{x} = 0.025$

$x = 40$

for $x = \frac{1}{40}$

$\beta = 1.43$

(6) Determine K_{gc} to be used in HELP model analysis:

$$\psi_{ult} = 2 \times 10^{-3}\ m/sec$$

$$\psi_{allowable} = \frac{\psi_{ult}}{\pi RF}$$

$$\psi_{allowable} = \frac{2 \times 10^{-3}\ m^2/s}{5.6} = 3.6 \times 10^{-4}\ m^2/s$$

Golder Associates

SUBJECT MALVERN - WATER BALANCE EQUATION		
Job No. 003-6000 Ref.	Made by RAL Checked MPH Reviewed DJE	Date 11/17/3 Sheet 7 of 15

however:

$$K_{gc} = \frac{\psi_{gc}}{\epsilon_{gc}}$$

$$K_{gc} = \frac{(3.16 \times 10^{-4}\ m^2/s)(10{,}000\ cm^2/sec)}{(0.2)(2.54\ cm/in)}$$

$$K_{gc} = 7.09\ cm/sec$$

7.08

```
*******************************************************************************
*******************************************************************************
**                                                                           **
**                                                                           **
**              HYDROLOGIC EVALUATION OF LANDFILL PERFORMANCE                **
**                HELP MODEL VERSION 3.07  (1 NOVEMBER 1997)                 **
**                  DEVELOPED BY ENVIRONMENTAL LABORATORY                    **
**                    USAE WATERWAYS EXPERIMENT STATION                      **
**              FOR USEPA RISK REDUCTION ENGINEERING LABORATORY              **
**                                                                           **
**                                                                           **
*******************************************************************************
*******************************************************************************

PRECIPITATION DATA FILE:     C:\MYDOCU~1\HELP\DATA4.D4
TEMPERATURE DATA FILE:       C:\MYDOCU~1\HELP\DATA7.D7
SOLAR RADIATION DATA FILE:   C:\MYDOCU~1\HELP\DATA13.D13
EVAPOTRANSPIRATION DATA:     C:\MYDOCU~1\HELP\DATA11.D11
SOIL AND DESIGN DATA FILE:   C:\MYDOCU~1\HELP\DATA10.D10
OUTPUT DATA FILE:            C:\MYDOCU~1\HELP\MALVERN.OUT

TIME:  15: 1     DATE:  11/17/2003

*******************************************************************************

     TITLE:  MALVERN - MPA

*******************************************************************************

     NOTE:  INITIAL MOISTURE CONTENT OF THE LAYERS AND SNOW WATER WERE
              COMPUTED AS NEARLY STEADY-STATE VALUES BY THE PROGRAM.


                                LAYER  1
                                --------

                TYPE 1 - VERTICAL PERCOLATION LAYER
                    MATERIAL TEXTURE NUMBER  22
          THICKNESS                    =      6.00   INCHES
          POROSITY                     =      0.4190 VOL/VOL
          FIELD CAPACITY               =      0.3070 VOL/VOL
          WILTING POINT                =      0.1800 VOL/VOL
          INITIAL SOIL WATER CONTENT   =      0.3013 VOL/VOL
          EFFECTIVE SAT. HYD. COND.    =  0.189999992000E-04 CM/SEC
```

NOTE: SATURATED HYDRAULIC CONDUCTIVITY IS MULTIPLIED BY 3.00
FOR ROOT CHANNELS IN TOP HALF OF EVAPORATIVE ZONE.

LAYER 2

TYPE 1 - VERTICAL PERCOLATION LAYER
MATERIAL TEXTURE NUMBER 7

THICKNESS	=	18.00	INCHES
POROSITY	=	0.4730	VOL/VOL
FIELD CAPACITY	=	0.2220	VOL/VOL
WILTING POINT	=	0.1040	VOL/VOL
INITIAL SOIL WATER CONTENT	=	0.2900	VOL/VOL
EFFECTIVE SAT. HYD. COND.	=	0.520000001000E-03	CM/SEC

LAYER 3

TYPE 2 - LATERAL DRAINAGE LAYER
MATERIAL TEXTURE NUMBER 0

THICKNESS	=	0.20	INCHES
POROSITY	=	0.4570	VOL/VOL
FIELD CAPACITY	=	0.0830	VOL/VOL
WILTING POINT	=	0.0330	VOL/VOL
INITIAL SOIL WATER CONTENT	=	0.1121	VOL/VOL
EFFECTIVE SAT. HYD. COND.	=	7.090000150000	CM/SEC
SLOPE	=	2.50	PERCENT
DRAINAGE LENGTH	=	150.0	FEET

LAYER 4

TYPE 4 - FLEXIBLE MEMBRANE LINER
MATERIAL TEXTURE NUMBER 36

THICKNESS	=	0.04	INCHES
POROSITY	=	0.0000	VOL/VOL
FIELD CAPACITY	=	0.0000	VOL/VOL
WILTING POINT	=	0.0000	VOL/VOL
INITIAL SOIL WATER CONTENT	=	0.0000	VOL/VOL
EFFECTIVE SAT. HYD. COND.	=	0.399999993000E-12	CM/SEC
FML PINHOLE DENSITY	=	5.00	HOLES/ACRE
FML INSTALLATION DEFECTS	=	5.00	HOLES/ACRE
FML PLACEMENT QUALITY	=	3 - GOOD	

LAYER 5

TYPE 1 - VERTICAL PERCOLATION LAYER
MATERIAL TEXTURE NUMBER 7

THICKNESS	=	6.00 INCHES
POROSITY	=	0.4730 VOL/VOL
FIELD CAPACITY	=	0.2220 VOL/VOL
WILTING POINT	=	0.1040 VOL/VOL
INITIAL SOIL WATER CONTENT	=	0.1860 VOL/VOL
EFFECTIVE SAT. HYD. COND.	=	0.520000001000E-03 CM/SEC

GENERAL DESIGN AND EVAPORATIVE ZONE DATA

NOTE: SCS RUNOFF CURVE NUMBER WAS COMPUTED FROM DEFAULT SOIL DATA BASE USING SOIL TEXTURE #22 WITH A *GOOD STAND OF GRASS, A SURFACE SLOPE OF* 2.% AND A SLOPE LENGTH OF 150. FEET.

SCS RUNOFF CURVE NUMBER	=	87.40	
FRACTION OF AREA ALLOWING RUNOFF	=	100.0	PERCENT
AREA PROJECTED ON HORIZONTAL PLANE	=	0.700	ACRES
EVAPORATIVE ZONE DEPTH	=	21.0	INCHES
INITIAL WATER IN EVAPORATIVE ZONE	=	6.131	INCHES
UPPER LIMIT OF EVAPORATIVE STORAGE	=	9.609	INCHES
LOWER LIMIT OF EVAPORATIVE STORAGE	=	2.640	INCHES
INITIAL SNOW WATER	=	0.000	INCHES
INITIAL WATER IN LAYER MATERIALS	=	8.167	INCHES
TOTAL INITIAL WATER	=	8.167	INCHES
TOTAL SUBSURFACE INFLOW	=	0.00	INCHES/YEAR

EVAPOTRANSPIRATION AND WEATHER DATA

NOTE: EVAPOTRANSPIRATION DATA WAS OBTAINED FROM PHILADELPHIA PENNSYLVANIA

STATION LATITUDE	=	39.53 DEGREES
MAXIMUM LEAF AREA INDEX	=	2.00
START OF GROWING SEASON (JULIAN DATE)	=	105
END OF GROWING SEASON (JULIAN DATE)	=	299
EVAPORATIVE ZONE DEPTH	=	21.0 INCHES
AVERAGE ANNUAL WIND SPEED	=	9.60 MPH
AVERAGE 1ST QUARTER RELATIVE HUMIDITY	=	64.00 %

AVERAGE 2ND QUARTER RELATIVE HUMIDITY = 65.00 %
AVERAGE 3RD QUARTER RELATIVE HUMIDITY = 71.00 %
AVERAGE 4TH QUARTER RELATIVE HUMIDITY = 69.00 %

NOTE: PRECIPITATION DATA WAS SYNTHETICALLY GENERATED USING
COEFFICIENTS FOR PHILADELPHIA PENNSYLVANIA

NORMAL MEAN MONTHLY PRECIPITATION (INCHES)

JAN/JUL	FEB/AUG	MAR/SEP	APR/OCT	MAY/NOV	JUN/DEC
3.18	2.81	3.86	3.47	3.18	3.92
3.88	4.10	3.42	2.83	3.32	3.45

NOTE: TEMPERATURE DATA WAS SYNTHETICALLY GENERATED USING
COEFFICIENTS FOR PHILADELPHIA PENNSYLVANIA

NORMAL MEAN MONTHLY TEMPERATURE (DEGREES FAHRENHEIT)

JAN/JUL	FEB/AUG	MAR/SEP	APR/OCT	MAY/NOV	JUN/DEC
31.20	33.10	41.80	52.90	62.80	71.60
76.50	75.30	68.20	56.50	45.80	35.50

NOTE: SOLAR RADIATION DATA WAS SYNTHETICALLY GENERATED USING
COEFFICIENTS FOR PHILADELPHIA PENNSYLVANIA
AND STATION LATITUDE = 39.53 DEGREES

****

AVERAGE MONTHLY VALUES IN INCHES FOR YEARS 1 THROUGH 20

	JAN/JUL	FEB/AUG	MAR/SEP	APR/OCT	MAY/NOV	JUN/DEC
PRECIPITATION						
TOTALS	2.87	3.05	4.02	3.25	3.41	3.69
	4.02	4.15	2.87	2.67	3.43	3.14
STD. DEVIATIONS	1.60	1.35	1.84	1.45	1.53	2.47
	1.94	2.10	1.64	1.36	1.78	2.24

RUNOFF

TOTALS	1.035	1.422	1.123	0.102	0.174	0.275
	0.308	0.293	0.283	0.287	0.282	0.473
STD. DEVIATIONS	1.092	1.299	1.074	0.228	0.327	0.486
	0.613	0.473	0.478	0.428	0.523	0.818

EVAPOTRANSPIRATION

TOTALS	0.825	0.788	2.238	3.363	3.535	4.030
	3.748	3.764	2.220	1.334	1.288	0.924
STD. DEVIATIONS	0.293	0.441	0.486	0.754	0.756	1.583
	1.546	1.339	0.908	0.400	0.242	0.190

LATERAL DRAINAGE COLLECTED FROM LAYER 3

TOTALS	0.6642	0.5747	1.6627	0.7786	0.2272	0.1856
	0.0413	0.0018	0.0035	0.1847	0.6899	1.4770
STD. DEVIATIONS	0.6835	0.7740	0.7214	0.6305	0.3823	0.5126
	0.1061	0.0054	0.0144	0.4681	1.0396	1.4402

PERCOLATION/LEAKAGE THROUGH LAYER 4

TOTALS	0.0005	0.0004	0.0011	0.0006	0.0002	0.0001
	0.0000	0.0000	0.0000	0.0001	0.0004	0.0010
STD. DEVIATIONS	0.0004	0.0005	0.0004	0.0004	0.0003	0.0003
	0.0001	0.0000	0.0000	0.0003	0.0006	0.0009

PERCOLATION/LEAKAGE THROUGH LAYER 5

TOTALS	0.0018	0.0010	0.0015	0.0020	0.0010	0.0008
	0.0008	0.0005	0.0004	0.0007	0.0010	0.0013
STD. DEVIATIONS	0.0031	0.0023	0.0020	0.0018	0.0008	0.0010
	0.0008	0.0003	0.0003	0.0010	0.0017	0.0012

AVERAGES OF MONTHLY AVERAGED DAILY HEADS (INCHES)

DAILY AVERAGE HEAD ON TOP OF LAYER 4

AVERAGES	0.0032	0.0030	0.0086	0.0039	0.0011	0.0009
	0.0002	0.0000	0.0000	0.0009	0.0036	0.0084
STD. DEVIATIONS	0.0033	0.0041	0.0050	0.0031	0.0018	0.0026
	0.0005	0.0000	0.0001	0.0023	0.0056	0.0109

****

****

AVERAGE ANNUAL TOTALS & (STD. DEVIATIONS) FOR YEARS 1 THROUGH 20

	INCHES	CU. FEET	PERCENT
PRECIPITATION	40.57 (5.563)	103076.9	100.00
RUNOFF	6.057 (2.1910)	15390.33	14.931
EVAPOTRANSPIRATION	28.059 (2.8793)	71297.71	69.169
LATERAL DRAINAGE COLLECTED FROM LAYER 3	6.49115 (2.25465)	16494.000	16.00164
PERCOLATION/LEAKAGE THROUGH LAYER 4	0.00453 (0.00146)	11.514	0.01117
AVERAGE HEAD ON TOP OF LAYER 4	0.003 (0.001)		
PERCOLATION/LEAKAGE THROUGH LAYER 5	0.01301 (0.01422)	33.063	0.03208
CHANGE IN WATER STORAGE	-0.054 (1.1618)	-138.16	-0.134

****

****

PEAK DAILY VALUES FOR YEARS 1 THROUGH 20

	(INCHES)	(CU. FT.)
PRECIPITATION	4.83	12273.029
RUNOFF	2.680	6809.8936
DRAINAGE COLLECTED FROM LAYER 3	0.78814	2002.67065
PERCOLATION/LEAKAGE THROUGH LAYER 4	0.000810	2.05781
AVERAGE HEAD ON TOP OF LAYER 4	0.500	
MAXIMUM HEAD ON TOP OF LAYER 4	0.562	
LOCATION OF MAXIMUM HEAD IN LAYER 3 (DISTANCE FROM DRAIN)	6.6 FEET	
PERCOLATION/LEAKAGE THROUGH LAYER 5	0.000474	1.20533
SNOW WATER	3.28	8340.9277

MAXIMUM VEG. SOIL WATER (VOL/VOL)	0.3731
MINIMUM VEG. SOIL WATER (VOL/VOL)	0.1257

*** Maximum heads are computed using McEnroe's equations. ***

Reference: Maximum Saturated Depth over Landfill Liner
by Bruce M. McEnroe, University of Kansas
ASCE Journal of Environmental Engineering
Vol. 119, No. 2, March 1993, pp. 262-270.

****

****

FINAL WATER STORAGE AT END OF YEAR 20

LAYER	(INCHES)	(VOL/VOL)
1	1.8629	0.3105
2	4.2519	0.2362
3	0.0178	0.0888
4	0.0000	0.0000
5	0.9465	0.1578
SNOW WATER	0.000	

****
****

APPENDIX C

STORMWATER EVALUATION / CALCULATIONS

APPENDIX C1

EXISTING CONDITIONS

GOLDER ASSOCIATES	Subject: Existing Peak Runoff Calculation		
	Job No: 003-6000	Made by: RAL	Date: 11/17/03
	Ref: Malvern	Check by: CBM	Sheet: 1 of 12
		Review by: BJC	

OBJECTIVE: Determine the peak runoff from the MPA for the existing conditions.

REFERENCES:

1) Golder Associates Inc., "Preliminary (30%) Design Report, *Figure 2 Site Layout,*" dated January 2003.

2) USDA, Soil Conservation Service, "TR-55: Urban Hydrology for Small Watersheds" (TR-55), dated June 1986.

3) Commonwealth of Pennsylvania, Department of Environmental Protection Office of Water Management, "Erosion and Sediment Pollution Control Manual," dated March 2000.

METHODS & CALCULATIONS: The TR-55 computer program was used to determine the peak runoff for each area. This program requires several input parameter such as:

- Rainfall Type – Type II (see sheet 3 of 12);
- Design Storm - 25-year, 24-hour storm (5.6 inches) (see sheet 4 of 12);
- Drainage Area (as described below);
- Curve Number (as described below); and
- Time of Concentration (as described below).

Drainage Areas

The Site encompasses approximately five acres (see sheet 5 of 12), consisting of the Main Plant Area (MPA), the Former Disposal Area/Mounded Area (FDA/MA), and undisturbed areas within. The MPA covers an area of approximately 1.25 acres, while the FDA/MA consists of 2 acres, with the remaining undisturbed area encompasses 1.75 acres.

Curve Number

The Curve Number, which is based on the hydrologic soil type and surface cover, is outlined in Reference 2. The hydrologic soil type is assumed to be Type C (soils of low infiltration rates with moderately fine to fine texture, see sheet 6 of 12) based on field observations. The surface coverage for the MPA, FDA/MA, and other areas are slightly different. The MPA is mostly disturbed industrial area with impervious paved surfaces. The FDA/MA is mostly woods with some open space. The remaining portion of the Site consists of woods with thick underbrush. The CN values for each of these areas was taken from Table 2-2a and 2-2c from Reference 2 (see attached sheets 7 and 8 of 12) and is summarized as follows:

- **MPA – Industrial Area** **CN=91**

(from Table 2-2a – Urban District Industrial)

- **FDA/MA – Woods with Open Space** **CN=72**

(average between CN=70 from Table 2-2c for Woods Good Condition and CN=74 from Table 2-2a for Open Space Good Condition)

- **Other Areas – Woods with Underbrush** **CN=72**

(from Table 2-2c – Woods grass combination Good Condition)

A weighted average curve number for the Site was calculated and is summarized as follows:

Area	% Land Coverage	Description of Land Coverage	Curve Number	Weighted Curve Number
MPA	25%	Industrial Area	91	22.8
FDA/MA	40%	Woods with Open Space	72	28.8
Other Areas	35%	Woods with Underbrush	72	25.2
		Weighted Curve Number		**76.8**
			USE	77

Time of Concentration

The time of concentration (T_c), the length of time for runoff to travel from the most hydrologically distant point within a drainage area (see sheet 5 of 12), was calculated for the existing conditions using methods outlined in Reference 2 (see sheet 9 of 12 for calculations). The time of concentration is 0.18 hours.

Peak Runoff

The peak runoff was determined by using the TR-55 computer program. The peak runoff for the 25 year, 24 hour storm is approximately 18 cfs for existing conditions (see sheet 12 of 12).

Sheet 3 of 12

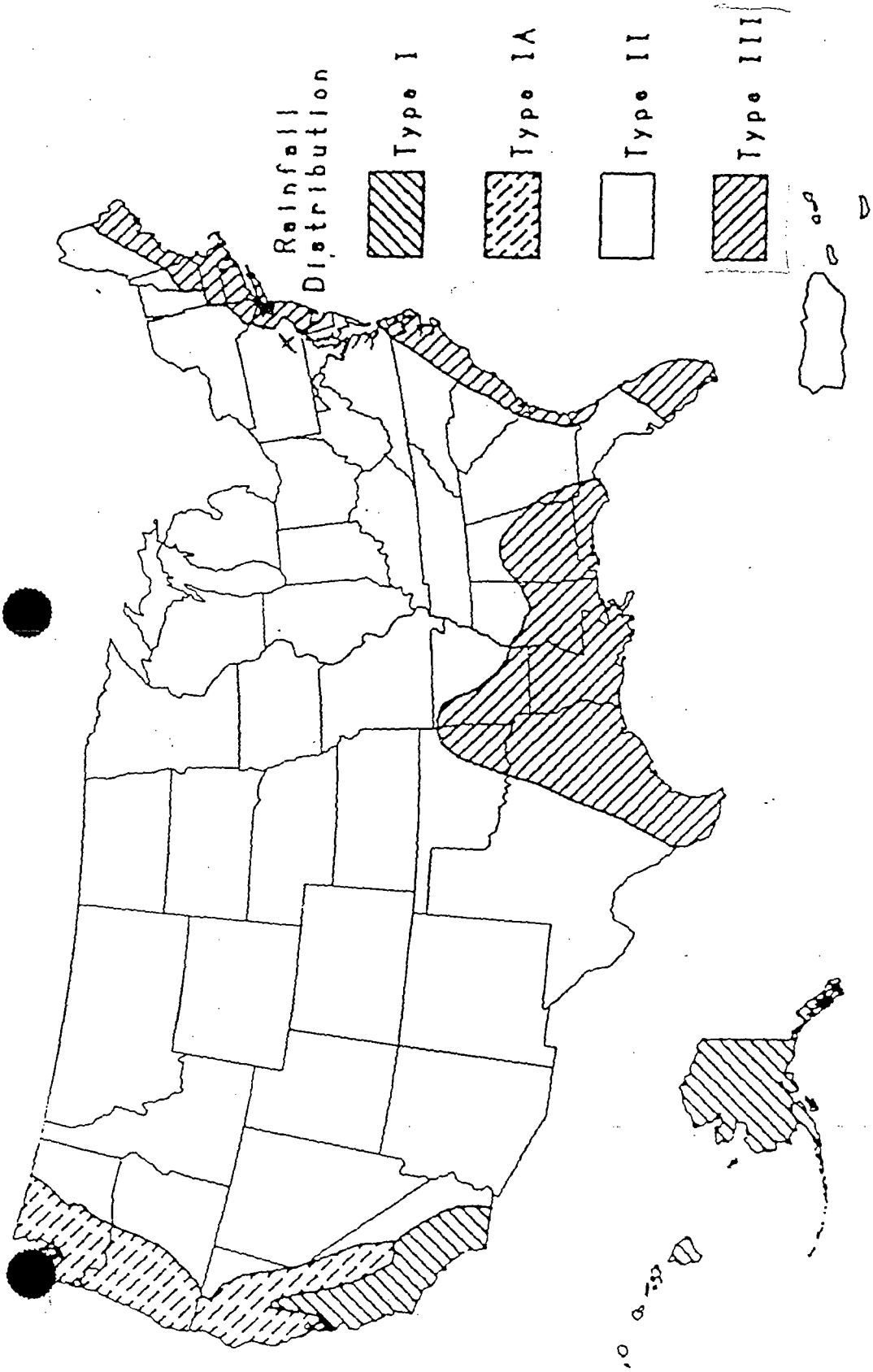

Figure B-2.—Approximate geographic boundaries for SCS rainfall distributions.

TABLE 1
Pennsylvania Rainfall By Counties
(For Use With Technical Release 55 - Urban Hydrology for Small Watersheds)

COUNTY	24 HR RAINFALL FOR VARIOUS FREQUENCIES						
	1 yr.	2 yr.	5 yr.	10 yr.	25 yr.	50 yr.	100 yr.
Adams	2.5	3.0	3.9	4.8	5.3	6.0	6.7
Allegheny	2.3	2.6	3.3	3.9	4.4	4.9	5.2
Armstrong	2.3	2.6	3.3	3.9	4.4	4.9	5.2
Beaver	2.3	2.6	3.2	3.8	4.3	4.7	4.9
Bedford	2.4	2.8	3.6	4.5	4.9	5.5	6.0
Berks	2.5	3.1	4.1	4.9	5.5	6.1	6.9
Blair	2.4	2.8	3.6	4.3	4.8	5.3	5.8
Bradford	2.3	2.8	3.6	4.2	4.9	5.4	5.8
Bucks	2.5	3.3	4.2	5.0	5.8	6.4	7.2
Butler	2.3	2.6	3.3	3.8	4.3	4.8	5.0
Cambria	2.4	2.8	3.4	4.2	4.8	5.2	5.7
Cameron	2.3	2.7	3.4	4.0	4.5	5.0	5.4
Carbon	2.5	3.0	4.0	4.8	5.3	6.0	6.7
Centre	2.3	2.8	3.6	4.3	4.8	5.4	5.8
Chester	2.6	3.2	4.2	5.0	5.6	6.3	7.1
Clarion	2.2	2.6	3.3	3.7	4.4	4.8	5.1
Clearfield	2.3	2.7	3.5	4.0	4.6	5.1	5.5
Clinton	2.3	2.8	3.6	4.2	4.8	5.3	5.7
Columbia	2.4	2.9	3.7	4.6	5.1	5.7	6.2
Crawford	2.2	2.5	3.1	3.6	4.2	4.7	4.8
Cumberland	2.4	2.9	3.8	4.7	5.1	5.8	6.4
Dauphin	2.5	2.9	3.9	4.8	5.2	5.9	6.5
Delaware	2.6	3.3	4.2	5.0	5.7	6.4	7.3
Elk	2.3	2.7	3.4	3.9	4.5	4.9	5.3
Erie	2.1	2.5	3.1	3.6	4.1	4.6	4.7
Fayette	2.4	2.7	3.4	4.1	4.6	5.1	5.6
Forest	2.2	2.6	3.3	3.8	4.3	4.8	5.1
Franklin	2.4	2.9	3.8	4.8	5.1	5.9	6.4
Fulton	2.4	2.8	3.7	4.6	4.9	5.6	6.2
Greene	2.3	2.6	3.4	3.9	4.4	4.9	5.2
Huntingdon	2.4	2.8	3.7	4.6	4.9	5.5	5.9
Indiana	2.3	2.7	3.4	4.0	4.5	5.0	5.4
Jefferson	2.3	2.6	3.4	3.9	4.5	4.9	5.3
Juniata	2.4	2.9	3.7	4.5	4.9	5.6	6.1

COUNTY	24 HOUR RAINFALL FOR VARIOUS FREQUENCIES						
	1 yr	2 yr.	5 yr.	10 yr.	25 yr.	50 yr.	100 yr.
Lackawanna	2.4	2.9	3.9	4.7	5.2	5.8	6.5
Lancaster	2.5	3.1	4.1	5.0	5.5	6.2	6.9
Lawrence	2.2	2.5	3.2	3.7	4.2	4.7	4.8
Lebanon	2.5	3.0	4.0	4.8	5.3	6.0	6.7
Lehigh	2.5	3.1	4.1	4.9	5.5	6.1	6.9
Luzerne	2.4	2.9	3.9	4.7	5.2	5.8	6.4
Lycoming	2.4	2.8	3.6	4.3	4.9	5.5	5.9
McKean	2.2	2.6	3.3	3.9	4.4	4.8	5.2
Mercer	2.2	2.5	3.2	3.7	4.2	4.7	4.8
Mifflin	2.4	2.8	3.6	4.4	4.8	5.5	6.0
Monroe	2.5	3.0	4.0	4.8	5.4	6.1	6.8
Montgomery	2.6	3.2	4.2	5.0	5.7	6.4	7.1
Montour	2.4	2.9	3.7	4.5	5.0	5.6	6.2
Northampton	2.5	3.1	4.1	4.9	5.5	6.1	6.9
Northumberland	2.4	2.9	3.8	4.6	5.0	5.7	6.3
Perry	2.4	2.9	3.8	4.6	5.0	5.7	6.3
Philadelphia	2.6	3.3	4.3	5.0	5.7	6.4	7.3
Pike	2.6	3.0	4.0	4.9	5.4	6.1	7.0
Potter	2.3	2.7	3.4	4.0	4.6	5.0	5.4
Schuylkill	2.5	3.0	3.9	4.7	5.3	5.9	6.5
Snyder	2.4	2.9	3.7	4.5	5.0	5.6	6.1
Somerset	2.4	2.6	3.5	4.3	4.8	5.3	5.8
Sullivan	2.4	2.8	3.7	4.4	4.9	5.5	6.0
Susquehanna	2.4	2.9	3.8	4.5	5.0	5.7	6.2
Tioga	2.3	2.7	3.5	4.2	4.7	5.1	5.6
Union	2.4	2.8	3.7	4.4	4.9	5.5	6.0
Venango	2.2	2.5	3.3	3.7	4.2	4.7	4.9
Warren	2.2	2.5	3.2	3.8	4.3	4.8	4.9
Washington	2.3	2.6	3.3	3.9	4.4	4.9	5.2
Wayne	2.4	2.9	3.9	4.7	5.2	6.0	6.7
Westmoreland	2.3	2.7	3.4	4.0	4.6	5.0	5.4
Wyoming	2.4	2.9	3.8	4.5	5.0	5.6	6.2
York	2.5	3.1	4.1	4.9	5.5	6.2	6.9

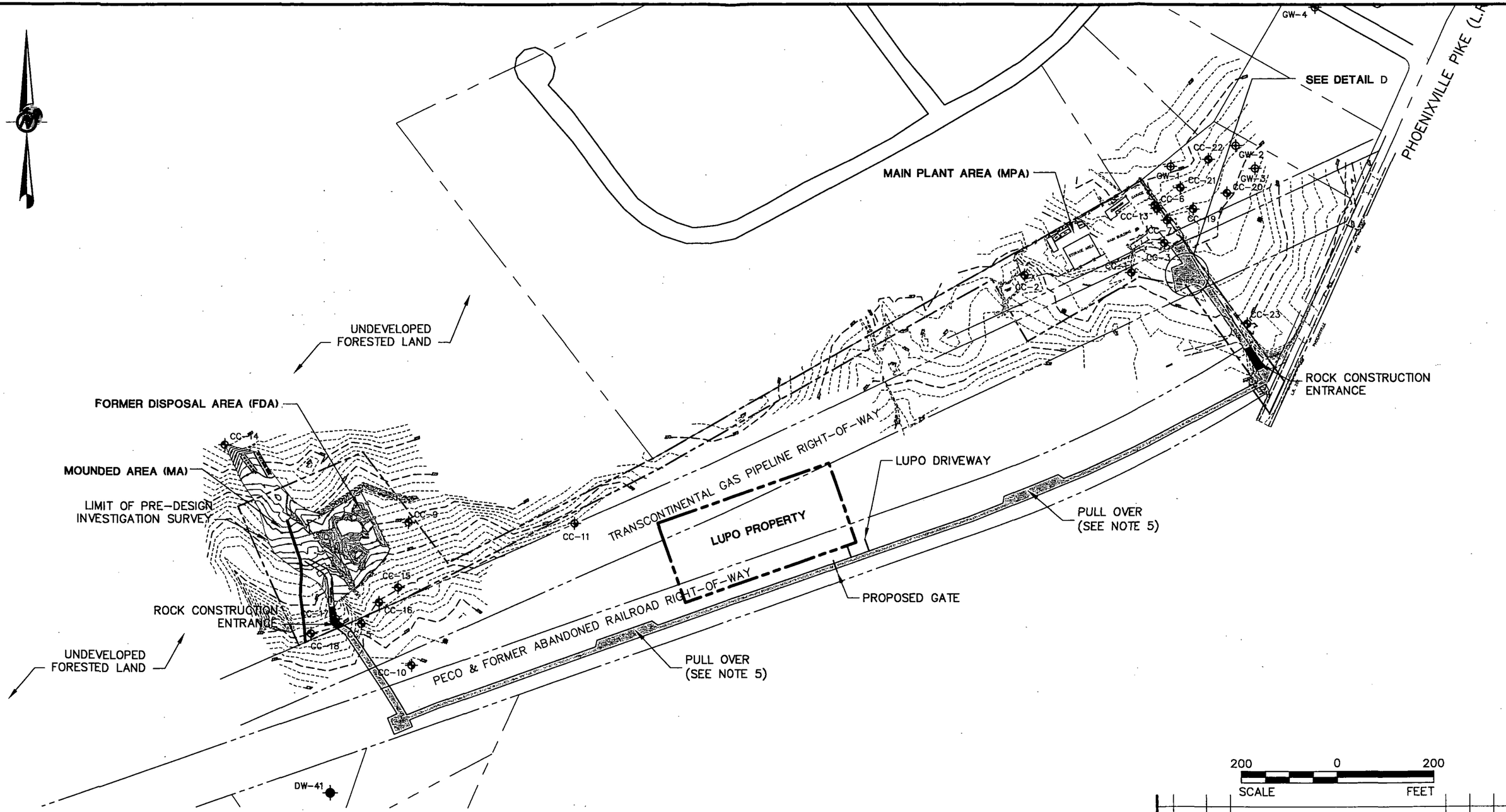

200 0 200

SCALE FEET

REFERENCES

SITE BOUNDARY

TIME OF CONCENTRATION

REFERENCES

1.) TOPOGRAPHIC FEATURES TAKEN FROM CADD FILE "MALVERN.DWG" DATED 05/24/96, SUPPLIED TO de maximus, inc. BY USEPA IN MARCH 2000, EXCEPT AS NOTED BELOW.

2.) TOPOGRAPHIC FEATURES INSIDE THE LIMIT OF PRE-DESIGN INVESTIGATION SURVEY AREA TAKEN FROM CADD FILE "S0101(2000)" DATED 10/31/01 SUPPLIED BY PENNONI ASSOCIATES, MODIFIED BY GOLDER ASSOCIATES ON 04/10/02.

3.) LOCATION OF ASTON ROAD AND JAMES THOMAS ROAD ESTIMATED BY GOLDER ASSOCIATES FROM AERIAL PHOTOS.

4.) LUPO PROPERTY AND DRIVEWAY ESTIMATED FROM CHESTER COUNTY, PA DEED BOOK 0J55 PAGE 338 ROW PROPERTY LINES.

REV	DATE	DES	REVISION DESCRIPTION	CADD	CHK	RVW

PROJECT

CHEMCLENE SITE DEFENSE GROUP
MALVERN TCE SUPERFUND SITE
EAST WHITELAND TOWNSHIP, PENNSYLVANIA

TITLE

EXISTING CONDITIONS

Golder Associates
Philadelphia USA

PROJECT No.		003-6000	FILE No. 0036000-APPENDIX 1		
DESIGN	RAL	11/18/03	SCALE	AS SHOWN	REV. 0
CADD	AM	11/20/03			
CHECK					
REVIEW					

Drawing file: 0036000 - APPENDIX 1.dwg Nov 20, 2003 - 11:30am

Appendix A: Hydrologic soil groups

Soils are classified into hydrologic soil groups (HSG's) to indicate the minimum rate of infiltration obtained for bare soil after prolonged wetting. The HSG's, which are A, B, C, and D, are one element used in determining runoff curve numbers (see chapter 2). For the convenience of TR-55 users, exhibit A-1 lists the HSG classification of United States soils.

The infiltration rate is the rate at which water enters the soil at the soil surface. It is controlled by surface conditions. HSG also indicates the transmission rate—the rate at which the water moves within the soil. This rate is controlled by the soil profile. Approximate numerical ranges for transmission rates shown in the HSG definitions were first published by Musgrave (USDA 1955). The four groups are defined by SCS soil scientists as follows:

Group A soils have low runoff potential and high infiltration rates even when thoroughly wetted. They consist chiefly of deep, well to excessively drained sands or gravels and have a high rate of water transmission (greater than 0.30 in/hr).

Group B soils have moderate infiltration rates when thoroughly wetted and consist chiefly of moderately deep to deep, moderately well to well drained soils with moderately fine to moderately coarse textures. These soils have a moderate rate of water transmission (0.15-0.30 in/hr).

Group C soils have low infiltration rates when thoroughly wetted and consist chiefly of soils with a layer that impedes downward movement of water and soils with moderately fine to fine texture. These soils have a low rate of water transmission (0.05-0.15 in/hr).

Group D soils have high runoff potential. They have very low infiltration rates when thoroughly wetted and consist chiefly of clay soils with a high swelling potential, soils with a permanent high water table, soils with a claypan or clay layer at or near the surface, and shallow soils over nearly impervious material. These soils have a very low rate of water transmission (0-0.05 in/hr).

In exhibit A-1, some of the listed soils have an added modifier: for example, "Abrazo, gravelly." This refers to a gravelly phase of the Abrazo series that is found in SCS soil map legends.

Disturbed soil profiles

As a result of urbanization, the soil profile may be considerably altered and the listed group classification may no longer apply. In these circumstances, use the following to determine HSG according to the texture of the new surface soil, provided that significant compaction has not occurred (Brakensiek and Rawls 1983):

HSG	*Soil textures*
A	Sand, loamy sand, or sandy loam
B	Silt loam or loam
C	Sandy clay loam
D	Clay loam, silty clay loam, sandy clay, silty clay, or clay

Drainage and group D soils

Some soils in the list are in group D because of a high water table that creates a drainage problem. Once these soils are effectively drained, they are placed in a different group. For example, Ackerman soil is classified as A/D. This indicates that the drained Ackerman soil is in group A and the undrained soil is in group D.

Table 2-2a.—Runoff curve numbers for urban areas[1]

Cover description		Curve numbers for hydrologic soil group—			
Cover type and hydrologic condition	Average percent impervious area[2]	A	B	C	D
Fully developed urban areas (vegetation established)					
Open space (lawns, parks, golf courses, cemeteries, etc.)[3]:					
Poor condition (grass cover < 50%)		68	79	86	89
Fair condition (grass cover 50% to 75%)		49	69	79	84
Good condition (grass cover > 75%)		39	61	74	80
Impervious areas:					
Paved parking lots, roofs, driveways, etc. (excluding right-of-way)		98	98	98	98
Streets and roads:					
Paved; curbs and storm sewers (excluding right-of-way)		98	98	98	98
Paved; open ditches (including right-of-way)		83	89	92	93
Gravel (including right-of-way)		76	85	89	91
Dirt (including right-of-way)		72	82	87	89
Western desert urban areas:					
Natural desert landscaping (pervious areas only)[4]		63	77	85	88
Artificial desert landscaping (impervious weed barrier, desert shrub with 1- to 2-inch sand or gravel mulch and basin borders)		96	96	96	96
Urban districts:					
Commercial and business	85	89	92	94	95
Industrial	72	81	88	91	93
Residential districts by average lot size:					
1/8 acre or less (town houses)	65	77	85	90	92
1/4 acre	38	61	75	83	87
1/3 acre	30	57	72	81	86
1/2 acre	25	54	70	80	85
1 acre	20	51	68	79	84
2 acres	12	46	65	77	82
Developing urban areas					
Newly graded areas (pervious areas only, no vegetation)[5]		77	86	91	94
Idle lands (CN's are determined using cover types similar to those in table 2-2c).					

[1]Average runoff condition, and $I_a = 0.2S$.

[2]The average percent impervious area shown was used to develop the composite CN's. Other assumptions are as follows: impervious areas are directly connected to the drainage system, impervious areas have a CN of 98, and pervious areas are considered equivalent to open space in good hydrologic condition. CN's for other combinations of conditions may be computed using figure 2-3 or 2-4.

[3]CN's shown are equivalent to those of pasture. Composite CN's may be computed for other combinations of open space cover type.

[4]Composite CN's for natural desert landscaping should be computed using figures 2-3 or 2-4 based on the impervious area percentage (CN = 98) and the pervious area CN. The pervious area CN's are assumed equivalent to desert shrub in poor hydrologic condition.

[5]Composite CN's to use for the design of temporary measures during grading and construction should be computed using figure 2-3 or 2-4, based on the degree of development (impervious area percentage) and the CN's for the newly graded pervious areas.

Table 2-2c.—Runoff curve numbers for other agricultural lands[1]

Cover description		Curve numbers for hydrologic soil group—			
Cover type	Hydrologic condition	A	B	C	D
Pasture, grassland, or range—continuous forage for grazing.[2]	Poor	68	79	86	89
	Fair	49	69	79	84
	Good	39	61	74	80
Meadow—continuous grass, protected from grazing and generally mowed for hay.	—	30	58	71	78
Brush—brush-weed-grass mixture with brush the major element.[3]	Poor	48	67	77	83
	Fair	35	56	70	77
	Good	[4]30	48	65	73
Woods—grass combination (orchard or tree farm).[5]	Poor	57	73	82	86
	Fair	43	65	76	82
	Good	32	58	72	79
Woods.[6]	Poor	45	66	77	83
	Fair	36	60	73	79
	Good	[4]30	55	70	77
Farmsteads—buildings, lanes, driveways, and surrounding lots.	—	59	74	82	86

[1]Average runoff condition, and $I_a = 0.2S$.

[2]*Poor:* <50% ground cover or heavily grazed with no mulch.
Fair: 50 to 75% ground cover and not heavily grazed.
Good: >75% ground cover and lightly or only occasionally grazed.

[3]*Poor:* <50% ground cover.
Fair: 50 to 75% ground cover.
Good: >75% ground cover.

[4]Actual curve number is less than 30; use CN = 30 for runoff computations.

[5]CN's shown were computed for areas with 50% woods and 50% grass (pasture) cover. Other combinations of conditions may be computed from the CN's for woods and pasture.

[6]*Poor:* Forest litter, small trees, and brush are destroyed by heavy grazing or regular burning.
Fair: Woods are grazed but not burned, and some forest litter covers the soil.
Good: Woods are protected from grazing, and litter and brush adequately cover the soil.

Project Malvern By: RAD Date: 11/17/2003

Location _____ Checked: _____ Date: _____

Condition Existing Conditions

Watershed				
Segment	a			
SHEET FLOW (Application to T_c only)				
1. Surface Description	woods			
2. Manning's roughness coefficient, n	0.4			
3. Flow Length, L (total L<300ft) ft.	75			
4. Two-yr 24-hr rainfall, P_2 in.	3.2			
5. Land slope, s ft./ft $\frac{382-376.5}{75}$	0.07			
6. $T_t = \frac{0.007\,(nL)^{0.8}}{P_2^{0.5}\,s^{0.4}}$ hr.	**0.169**			
Segment				
Shallow Concentrated Flow				
7. Surface description (paved or unpaved)	unpaved			
8. Flow Length, L ft.	180			
9. Watercourse slope, s ft./ft. $\frac{376.5-364}{180}$	0.069			
10. Average velocity, V (figure 3-1) ft./s.	4.24			
11. $T_T = \frac{L}{3600V}$ hr.	**0.0118**			
Segment				
Channel Flow				
12. Cross Sectional flow area, a $ft.^2$				
13. Wetted perimeter, p_w ft.				
14. Hydraulic radius, $r = a/p_w$ ft.				
15. Channel slope, s ft./ft.				
16. Manning's roughness coeffienct, n				
17. $V = \frac{1.49\,r^{2/3}\,s^{1/2}}{n}$ ft./s.				
18. Flow Length, L ft.				
19. Tt = L/3600 V hr.				
20. Total Tc from sheet, shallow, and channel flow hr.	**0.181**			

Sheet flow

Sheet flow is flow over plane surfaces. It usually occurs in the headwater of streams. With sheet flow, the friction value (Manning's n) is an effective roughness coefficient that includes the effect of raindrop impact; drag over the plane surface; obstacles such as litter, crop ridges, and rocks; and erosion and transportation of sediment. These n values are for very shallow flow depths of about 0.1 foot or so. Table 3-1 gives Manning's n values for sheet flow for various surface conditions.

For sheet flow of less than 300 feet, use Manning's kinematic solution (Overton and Meadows 1976) to compute T_t:

$$T_t = \frac{0.007\,(nL)^{0.8}}{(P_2)^{0.5}\,s^{0.4}} \qquad \text{[Eq. 3-3]}$$

Table 3-1.—Roughness coefficients (Manning's n) for sheet flow

Surface description	n[1]
Smooth surfaces (concrete, asphalt, gravel, or bare soil)	0.011
Fallow (no residue)	0.05
Cultivated soils:	
Residue cover ≤20%	0.06
Residue cover >20%	0.17
Grass:	
Short grass prairie	0.15
Dense grasses[2]	0.24
Bermudagrass	0.41
Range (natural)	0.13
Woods:[3]	
Light underbrush	0.40
Dense underbrush	0.80

[1] The n values are a composite of information compiled by Engman (1986).

[2] Includes species such as weeping lovegrass, bluegrass, buffalo grass, blue grama grass, and native grass mixtures.

[3] When selecting n, consider cover to a height of about 0.1 ft. This is the only part of the plant cover that will obstruct sheet flow.

where

T_t = travel time (hr),
n = Manning's roughness coefficient (table 3-1),
L = flow length (ft),
P_2 = 2-year, 24-hour rainfall (in), and
s = slope of hydraulic grade line (land slope, ft/ft).

This simplified form of the Manning's kinematic solution is based on the following: (1) shallow steady uniform flow, (2) constant intensity of rainfall excess (that part of a rain available for runoff), (3) rainfall duration of 24 hours, and (4) minor effect of infiltration on travel time. Rainfall depth can be obtained from appendix B.

Shallow concentrated flow

After a maximum of 300 feet, sheet flow usually becomes shallow concentrated flow. The average velocity for this flow can be determined from figure 3-1, in which average velocity is a function of watercourse slope and type of channel. For slopes less than 0.005 ft/ft, use equations given in appendix F for figure 3-1. Tillage can affect the direction of shallow concentrated flow. Flow may not always be directly down the watershed slope if tillage runs across the slope.

After determining average velocity in figure 3-1, use equation 3-1 to estimate travel time for the shallow concentrated flow segment.

Open channels

Open channels are assumed to begin where surveyed cross section information has been obtained, where channels are visible on aerial photographs, or where blue lines (indicating streams) appear on United States Geological Survey (USGS) quadrangle sheets. Manning's equation or water surface profile information can be used to estimate average flow velocity. Average flow velocity is usually determined for bank-full elevation.

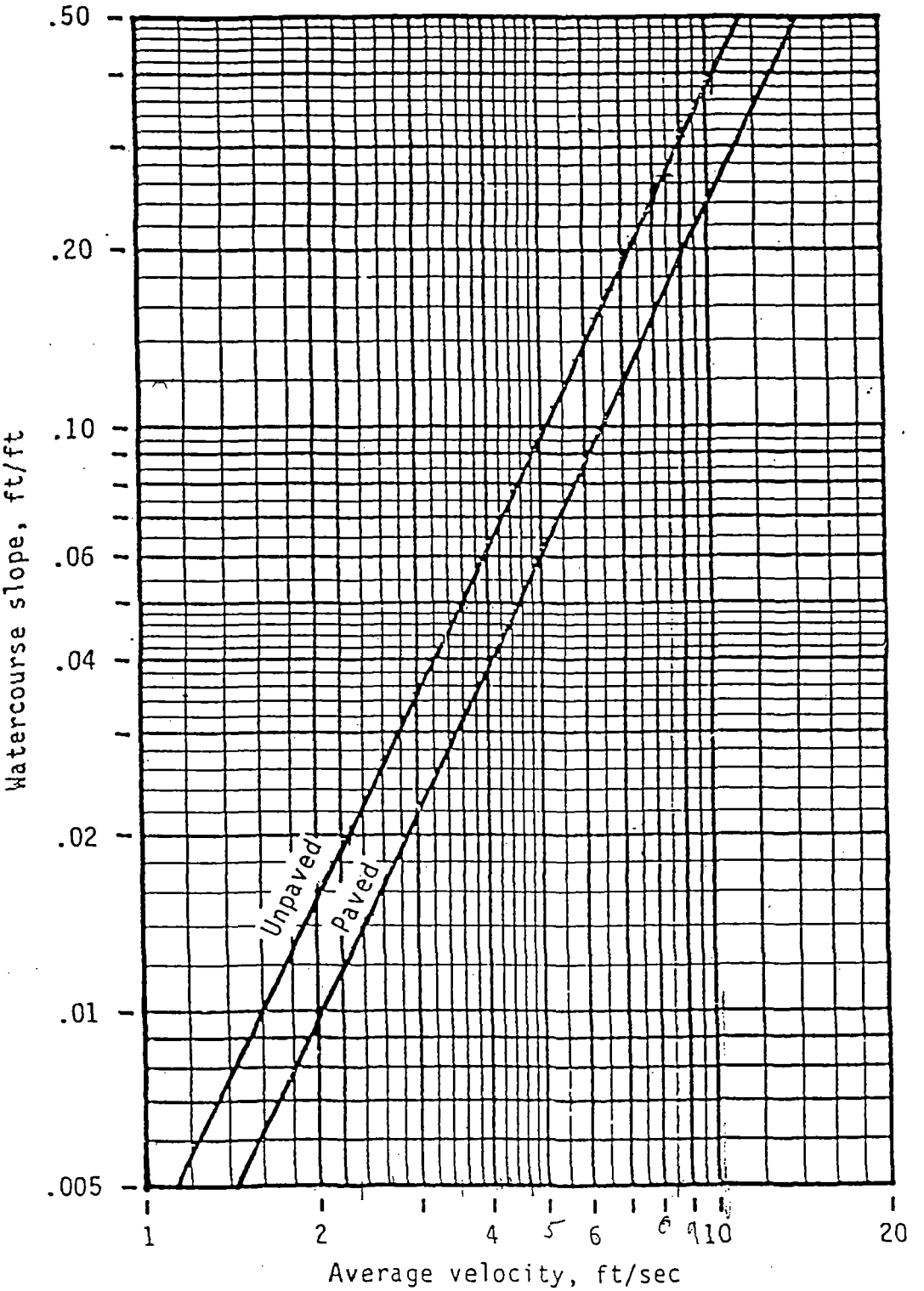

Figure 3-1.—Average velocities for estimating travel time for shallow concentrated flow.

TABULAR HYDROGRAPH METHOD

Version 2.10
Project : MALVERN User: RAL Date: 11-17-2003
County : CHESTER State: PA Checked: ____ Date: _____

Subtitle: EXISTING CONDITIONS

Total watershed area: 0.008 sq mi Rainfall type: II Frequency: 25 years

---------- Subareas ----------

	A
Area(sq mi)	0.01
Rainfall(in)	5.6
Curve number	74
Runoff(in)	2.85
Tc (hrs)	0.18
(Used)	0.20
TimeToOutlet	0.00
Ia/P	0.13

Time (hr)	Total Flow	Subarea Contribution to Total Flow (cfs) A
11.0	0	0
11.3	1	1
11.6	1	1
11.9	4	4
12.0	8	8
12.1	16	16
12.2	18P	18P
12.3	11	11
12.4	6	6
12.5	4	4
12.6	3	3
12.7	2	2
12.8	2	2
13.0	2	2
13.2	1	1
13.4	1	1
13.6	1	1
13.8	1	1
14.0	1	1
14.3	1	1
14.6	1	1
15.0	1	1
15.5	1	1
16.0	1	1
16.5	0	0
17.0	0	0
17.5	0	0
18.0	0	0
19.0	0	0
20.0	0	0
22.0	0	0
26.0	0	0

P - Peak Flow

APPENDIX C2

PROPOSED CONDITIONS

GOLDER ASSOCIATES	Subject: Proposed Peak Runoff Calculation		
	Job No: 003-6000	Made by: RAL	Date: 11/17/03
	Ref: Malvern	Check by: CBM	Sheet: 1 of 12
		Review by: BJE	

OBJECTIVE: Determine the peak runoff from the MPA for the proposed conditions.

REFERENCES:

1) Golder Associates Inc., "Preliminary (30%) Design Report, *Figure 2 Site Layout,*" dated January 2003.

2) USDA, Soil Conservation Service, "TR-55: Urban Hydrology for Small Watersheds" (TR-55), dated June 1986.

3) Commonwealth of Pennsylvania, Department of Environmental Protection Office of Water Management, "Erosion and Sediment Pollution Control Manual," dated March 2000.

METHODS & CALCULATIONS: The TR-55 computer program was used to determine the peak runoff for each area. This program requires several input parameter such as:

- Rainfall Type – Type II (see sheet 3 of 12);
- Design Storm - 25-year, 24-hour storm (5.6 inches) (see sheet 4 of 12);
- Drainage Area (as described below);
- Curve Number (as described below); and
- Time of Concentration (as described below).

Drainage Areas

The Site encompasses approximately five acres (see sheet 5 of 12), consisting of the Main Plant Area (MPA), the Former Disposal Area/Mounded Area (FDA/MA), and undisturbed areas within. The MPA covers an area of approximately 1.25 acres, while the FDA/MA consists of 2 acres, with the remaining undisturbed area encompasses 1.75 acres.

Curve Number

The Curve Number, which is based on the hydrologic soil type and surface cover, is outlined in Reference 2. The hydrologic soil type is assumed to be Type C (soils of low infiltration rates with moderately fine to fine texture, see sheet 6 of 12) based on field observations. The surface coverage for the MPA and FDA/MA will be slightly different from the existing conditions while the other areas will remain undisturbed. The MPA will consist of open space with vegetation. The FDA/MA is partially woods (approximately 40%) with more open vegetated space (approximately 60%). The remaining portion of the Site will remain undisturbed and will consist of woods with thick underbrush. The CN values for each of these areas was taken from Table 2-2a and 2-2c from Reference 2 (see attached sheets 7 and 8 of 12) and is summarized as follows:

- **MPA – Open Space with Vegetation** **CN=79**
(from Table 2-2a – Open Space Fair Condition)

- **FDA/MA – Woods and Open Space** **CN=75.4**
(weighted average between 40% CN=70 from Table 2-2c for Woods Good Condition and 60% CN=79 from Table 2-2a for Open Space Fair Condition)

- **Other Areas – Woods with Underbrush CN=72**

(from Table 2-2c – Woods grass combination Good Condition)

A weighted average curve number for the Site was calculated and is summarized as follows:

Area	% Land Coverage	Description of Land Coverage	Curve Number	Weighted Curve Number
MPA	25%	Industrial Area	79	19.8
FDA/MA	40%	Woods with Open Space	75.4	30.2
Other Areas	35%	Woods with Underbrush	72	25.2
		Weighted Curve Number		**75.2**
			USE	**75**

Time of Concentration

The time of concentration (T_c), the length of time for runoff to travel from the most hydrologically distant point within a drainage area (see sheet 5 of 12), was calculated for the existing conditions using methods outlined in Reference 2 (see sheet 9 of 12 for calculations). The time of concentration remains at 0.18 hours since the proposed conditions do not generally alter the existing flow patterns.

Peak Runoff

The peak runoff was determined by using the TR-55 computer program. The peak runoff for the 25 year, 24 hour storm is approximately 18 cfs for proposed conditions (see sheet 12 of 12). Therefore, there is no net increase in peak runoff for proposed conditions from the Site compared to existing conditions.

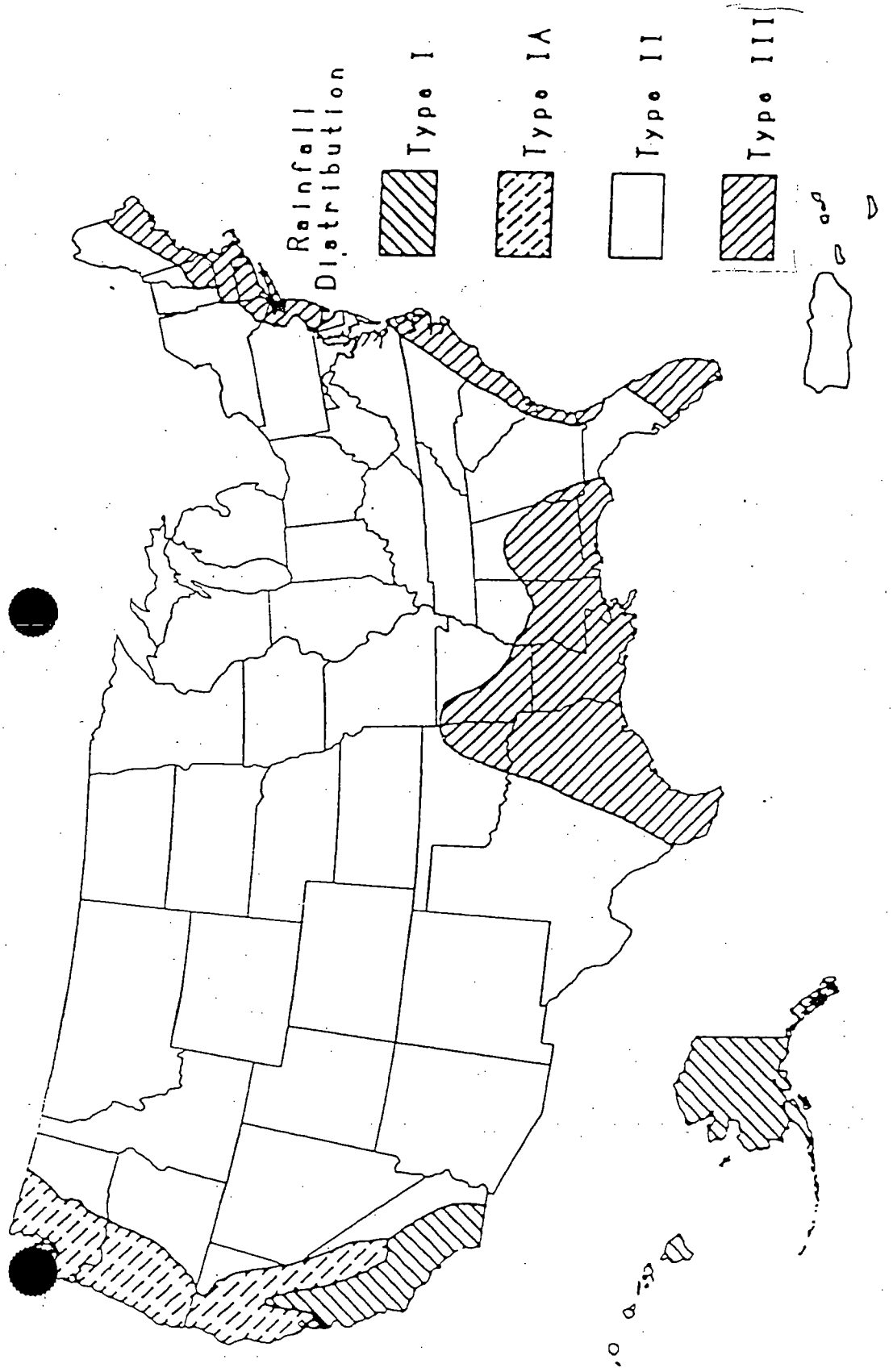

Figure II-2.—Approximate geographic boundaries for SCS rainfall distributions.

TABLE 1
Pennsylvania Rainfall By Counties
(For Use With Technical Release 55 - Urban Hydrology for Small Watersheds)

COUNTY	24 HR RAINFALL FOR VARIOUS FREQUENCIES							COUNTY	24 HOUR RAINFALL FOR VARIOUS FREQUENCIES						
	1 yr.	2 yr.	5 yr.	10 yr.	25 yr.	50 yr.	100 yr.		1 yr	2 yr.	5 yr.	10 yr.	25 yr.	50 yr.	100 yr.
Adams	2.5	3.0	3.9	4.8	5.3	6.0	6.7	Lackawanna	2.4	2.9	3.9	4.7	5.2	5.8	6.5
Allegheny	2.3	2.6	3.3	3.9	4.4	4.9	5.2	Lancaster	2.5	3.1	4.1	5.0	5.5	6.2	6.9
Armstrong	2.3	2.6	3.3	3.9	4.4	4.9	5.2	Lawrence	2.2	2.5	3.2	3.7	4.2	4.7	4.8
Beaver	2.3	2.6	3.2	3.8	4.3	4.7	4.9	Lebanon	2.5	3.0	4.0	4.8	5.3	6.0	6.7
Bedford	2.4	2.8	3.6	4.5	4.9	5.5	6.0	Lehigh	2.5	3.1	4.1	4.9	5.5	6.1	6.9
Berks	2.5	3.1	4.1	4.9	5.5	6.1	6.9	Luzerne	2.4	2.9	3.9	4.7	5.2	5.8	6.4
Blair	2.4	2.8	3.6	4.3	4.8	5.3	5.8	Lycoming	2.4	2.8	3.6	4.3	4.9	5.5	5.9
Bradford	2.3	2.8	3.6	4.2	4.9	5.4	5.8	McKean	2.2	2.6	3.3	3.9	4.4	4.8	5.2
Bucks	2.5	3.3	4.2	5.0	5.8	6.4	7.2	Mercer	2.2	2.5	3.2	3.7	4.2	4.7	4.8
Butler	2.3	2.6	3.3	3.8	4.3	4.8	5.0	Mifflin	2.4	2.8	3.6	4.4	4.8	5.5	6.0
Cambria	2.4	2.8	3.4	4.2	4.8	5.2	5.7	Monroe	2.5	3.0	4.0	4.8	5.4	6.1	6.8
Cameron	2.3	2.7	3.4	4.0	4.5	5.0	5.4	Montgomery	2.6	3.2	4.2	5.0	5.7	6.4	7.1
Carbon	2.5	3.0	4.0	4.8	5.3	6.0	6.7	Montour	2.4	2.9	3.7	4.5	5.0	5.6	6.2
Centre	2.3	2.8	3.6	4.3	4.8	5.4	5.8	Northampton	2.5	3.1	4.1	4.9	5.5	6.1	6.9
Chester	2.6	3.2	4.2	5.0	5.6	6.3	7.1	Northumberland	2.4	2.9	3.8	4.6	5.0	5.7	6.3
Clarion	2.2	2.6	3.3	3.7	4.4	4.8	5.1	Perry	2.4	2.9	3.8	4.6	5.0	5.7	6.3
Clearfield	2.3	2.7	3.5	4.0	4.6	5.1	5.5	Philadelphia	2.6	3.3	4.3	5.0	5.7	6.4	7.3
Clinton	2.3	2.8	3.6	4.2	4.8	5.3	5.7	Pike	2.6	3.0	4.0	4.9	5.4	6.1	7.0
Columbia	2.4	2.9	3.7	4.6	5.1	5.7	6.2	Potter	2.3	2.7	3.4	4.0	4.6	5.0	5.4
Crawford	2.2	2.5	3.1	3.6	4.2	4.7	4.8	Schuylkill	2.5	3.0	3.9	4.7	5.3	5.9	6.5
Cumberland	2.4	2.9	3.8	4.7	5.1	5.8	6.4	Snyder	2.4	2.9	3.7	4.5	5.0	5.6	6.1
Dauphin	2.5	2.9	3.9	4.8	5.2	5.9	6.5	Somerset	2.4	2.6	3.5	4.3	4.8	5.3	5.8
Delaware	2.6	3.3	4.2	5.0	5.7	6.4	7.3	Sullivan	2.4	2.8	3.7	4.4	4.9	5.5	6.0
Elk	2.3	2.7	3.4	3.9	4.5	4.9	5.3	Susquehanna	2.4	2.9	3.8	4.5	5.0	5.7	6.2
Erie	2.1	2.5	3.1	3.6	4.1	4.6	4.7	Tioga	2.3	2.7	3.5	4.2	4.7	5.1	5.6
Fayette	2.4	2.7	3.4	4.1	4.6	5.1	5.6	Union	2.4	2.8	3.7	4.4	4.9	5.5	6.0
Forest	2.2	2.6	3.3	3.8	4.3	4.8	5.1	Venango	2.2	2.5	3.3	3.7	4.2	4.7	4.9
Franklin	2.4	2.9	3.8	4.8	5.1	5.9	6.4	Warren	2.2	2.5	3.2	3.8	4.3	4.8	4.9
Fulton	2.4	2.8	3.7	4.6	4.9	5.6	6.2	Washington	2.3	2.6	3.3	3.9	4.4	4.9	5.2
Greene	2.3	2.6	3.4	3.9	4.4	4.9	5.2	Wayne	2.4	2.9	3.9	4.7	5.2	6.0	6.7
Huntingdon	2.4	2.8	3.7	4.6	4.9	5.5	5.9	Westmoreland	2.3	2.7	3.4	4.0	4.6	5.0	5.4
Indiana	2.3	2.7	3.4	4.0	4.5	5.0	5.4	Wyoming	2.4	2.9	3.8	4.5	5.0	5.6	6.2
Jefferson	2.3	2.6	3.4	3.9	4.5	4.9	5.3	York	2.5	3.1	4.1	4.9	5.5	6.2	6.9
Juniata	2.4	2.9	3.7	4.5	4.9	5.6	6.1								

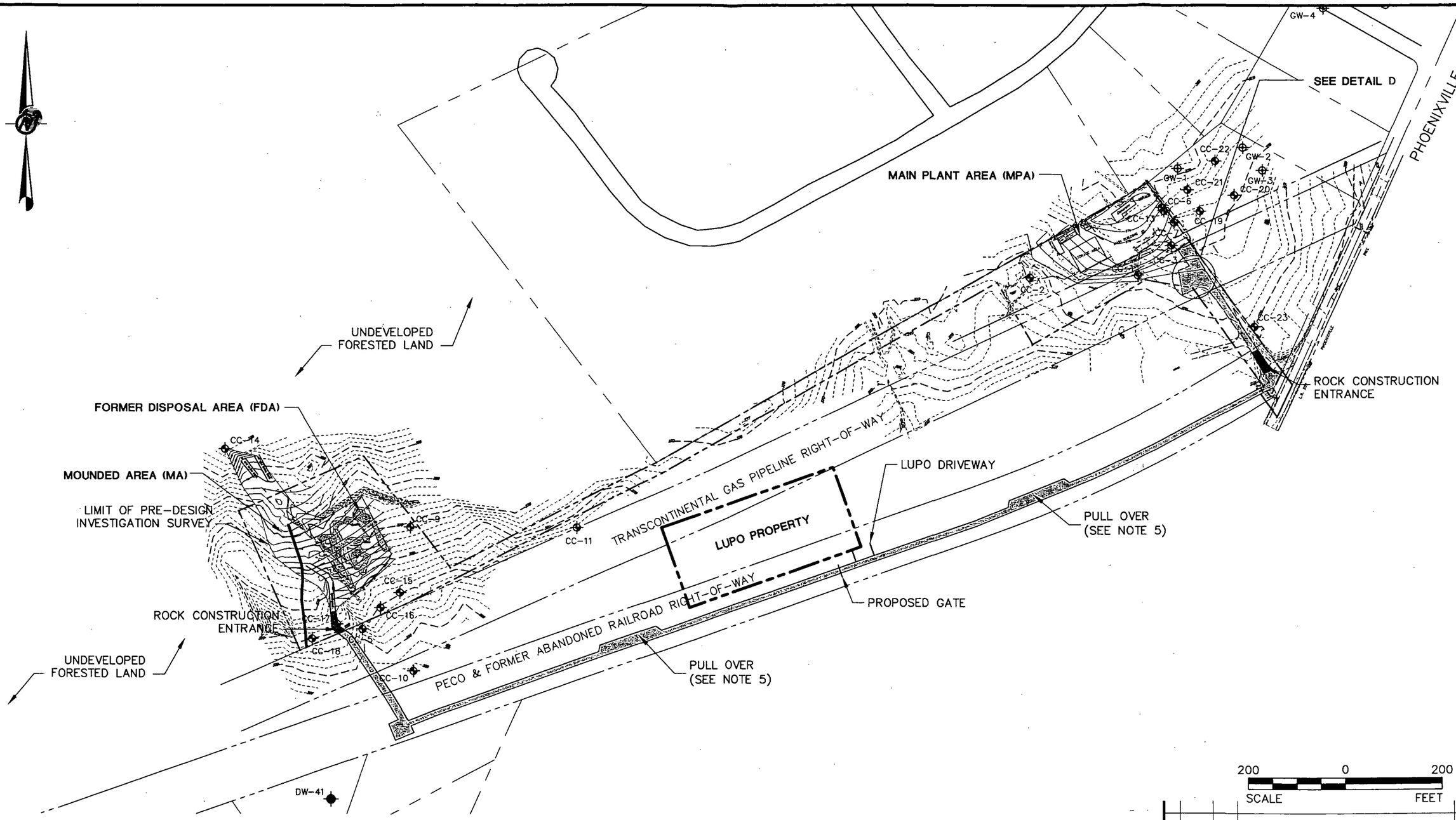

REFERENCES

SITE BOUNDARY

TIME OF CONCENTRATION

REFERENCES

1.) TOPOGRAPHIC FEATURES TAKEN FROM CADD FILE "MALVERN.DWG" DATED 05/24/96, SUPPLIED TO de maximus, inc. BY USEPA IN MARCH 2000, EXCEPT AS NOTED BELOW.

2.) TOPOGRAPHIC FEATURES INSIDE THE LIMIT OF PRE-DESIGN INVESTIGATION SURVEY AREA TAKEN FROM CADD FILE "S0101(2000)" DATED 10/31/01 SUPPLIED BY PENNONI ASSOCIATES, MODIFIED BY GOLDER ASSOCIATES ON 04/10/02.

3.) LOCATION OF ASTON ROAD AND JAMES THOMAS ROAD ESTIMATED BY GOLDER ASSOCIATES FROM AERIAL PHOTOS.

4.) LUPO PROPERTY AND DRIVEWAY ESTIMATED FROM CHESTER COUNTY, PA DEED BOOK 0J55 PAGE 338 ROW PROPERTY LINES.

200 0 200
SCALE FEET

REV	DATE	DES	REVISION DESCRIPTION	CADD	CHK	RVW

PROJECT
CHEMCLENE SITE DEFENSE GROUP
MALVERN TCE SUPERFUND SITE
EAST WHITELAND TOWNSHIP, PENNSYLVANIA

TITLE
PROPOSED CONDITIONS

Golder Associates
Philadelphia USA

PROJECT No.		003-6000	FILE No. 0036000-APPENDIX 2	
DESIGN	RAL	11/18/03	SCALE AS SHOWN	REV. 0
CADD	AM	11/20/03		
CHECK				
REVIEW				

Drawing file: 0036000 - APPENDIX 2.dwg Nov 20, 2003 - 11:31am

Appendix A: Hydrologic soil groups

Soils are classified into hydrologic soil groups (HSG's) to indicate the minimum rate of infiltration obtained for bare soil after prolonged wetting. The HSG's, which are A, B, C, and D, are one element used in determining runoff curve numbers (see chapter 2). For the convenience of TR-55 users, exhibit A-1 lists the HSG classification of United States soils.

The infiltration rate is the rate at which water enters the soil at the soil surface. It is controlled by surface conditions. HSG also indicates the transmission rate—the rate at which the water moves within the soil. This rate is controlled by the soil profile. Approximate numerical ranges for transmission rates shown in the HSG definitions were first published by Musgrave (USDA 1955). The four groups are defined by SCS soil scientists as follows:

Group A soils have low runoff potential and high infiltration rates even when thoroughly wetted. They consist chiefly of deep, well to excessively drained sands or gravels and have a high rate of water transmission (greater than 0.30 in/hr).

Group B soils have moderate infiltration rates when thoroughly wetted and consist chiefly of moderately deep to deep, moderately well to well drained soils with moderately fine to moderately coarse textures. These soils have a moderate rate of water transmission (0.15-0.30 in/hr).

Group C soils have low infiltration rates when thoroughly wetted and consist chiefly of soils with a layer that impedes downward movement of water and soils with moderately fine to fine texture. These soils have a low rate of water transmission (0.05-0.15 in/hr).

Group D soils have high runoff potential. They have very low infiltration rates when thoroughly wetted and consist chiefly of clay soils with a high swelling potential, soils with a permanent high water table, soils with a claypan or clay layer at or near the surface, and shallow soils over nearly impervious material. These soils have a very low rate of water transmission (0-0.05 in/hr).

In exhibit A-1, some of the listed soils have an added modifier: for example, "Abrazo, gravelly." This refers to a gravelly phase of the Abrazo series that is found in SCS soil map legends.

Disturbed soil profiles

As a result of urbanization, the soil profile may be considerably altered and the listed group classification may no longer apply. In these circumstances, use the following to determine HSG according to the texture of the new surface soil, provided that significant compaction has not occurred (Brakensiek and Rawls 1983):

HSG	*Soil textures*
A	Sand, loamy sand, or sandy loam
B	Silt loam or loam
C	Sandy clay loam
D	Clay loam, silty clay loam, sandy clay, silty clay, or clay

Drainage and group D soils

Some soils in the list are in group D because of a high water table that creates a drainage problem. Once these soils are effectively drained, they are placed in a different group. For example, Ackerman soil is classified as A/D. This indicates that the drained Ackerman soil is in group A and the undrained soil is in group D.

Table 2-2a.—Runoff curve numbers for urban areas[1]

Cover description		Curve numbers for hydrologic soil group—			
Cover type and hydrologic condition	Average percent impervious area[2]	A	B	C	D
Fully developed urban areas (vegetation established)					
Open space (lawns, parks, golf courses, cemeteries, etc.)[3]:					
Poor condition (grass cover < 50%)		68	79	86	89
Fair condition (grass cover 50% to 75%)		49	69	79	84
Good condition (grass cover > 75%)		39	61	74	80
Impervious areas:					
Paved parking lots, roofs, driveways, etc. (excluding right-of-way)		98	98	98	98
Streets and roads:					
Paved; curbs and storm sewers (excluding right-of-way)		98	98	98	98
Paved; open ditches (including right-of-way)		83	89	92	93
Gravel (including right-of-way)		76	85	89	91
Dirt (including right-of-way)		72	82	87	89
Western desert urban areas:					
Natural desert landscaping (pervious areas only)[4]		63	77	85	88
Artificial desert landscaping (impervious weed barrier, desert shrub with 1- to 2-inch sand or gravel mulch and basin borders)		96	96	96	96
Urban districts:					
Commercial and business	85	89	92	94	95
Industrial	72	81	88	91	93
Residential districts by average lot size:					
1/8 acre or less (town houses)	65	77	85	90	92
1/4 acre	38	61	75	83	87
1/3 acre	30	57	72	81	86
1/2 acre	25	54	70	80	85
1 acre	20	51	68	79	84
2 acres	12	46	65	77	82
Developing urban areas					
Newly graded areas (pervious areas only, no vegetation)[5]		77	86	91	94
Idle lands (CN's are determined using cover types similar to those in table 2-2c).					

[1]Average runoff condition, and $I_a = 0.2S$.

[2]The average percent impervious area shown was used to develop the composite CN's. Other assumptions are as follows: impervious areas are directly connected to the drainage system, impervious areas have a CN of 98, and pervious areas are considered equivalent to open space in good hydrologic condition. CN's for other combinations of conditions may be computed using figure 2-3 or 2-4.

[3]CN's shown are equivalent to those of pasture. Composite CN's may be computed for other combinations of open space cover type.

[4]Composite CN's for natural desert landscaping should be computed using figures 2-3 or 2-4 based on the impervious area percentage (CN = 98) and the pervious area CN. The pervious area CN's are assumed equivalent to desert shrub in poor hydrologic condition.

[5]Composite CN's to use for the design of temporary measures during grading and construction should be computed using figure 2-3 or 2-4, based on the degree of development (impervious area percentage) and the CN's for the newly graded pervious areas.

Table 2-2c.—Runoff curve numbers for other agricultural lands[1]

Cover description		Curve numbers for hydrologic soil group—			
Cover type	Hydrologic condition	A	B	C	D
Pasture, grassland, or range—continuous forage for grazing.[2]	Poor	68	79	86	89
	Fair	49	69	79	84
	Good	39	61	74	80
Meadow—continuous grass, protected from grazing and generally mowed for hay.	—	30	58	71	78
Brush—brush-weed-grass mixture with brush the major element.[3]	Poor	48	67	77	83
	Fair	35	56	70	77
	Good	[4]30	48	65	73
Woods—grass combination (orchard or tree farm).[5]	Poor	57	73	82	86
	Fair	43	65	76	82
	Good	32	58	72	79
Woods.[6]	Poor	45	66	77	83
	Fair	36	60	73	79
	Good	[4]30	55	70	77
Farmsteads—buildings, lanes, driveways, and surrounding lots.	—	59	74	82	86

[1]Average runoff condition, and $I_a = 0.2S$.

[2]*Poor:* <50% ground cover or heavily grazed with no mulch.
Fair: 50 to 75% ground cover and not heavily grazed.
Good: >75% ground cover and lightly or only occasionally grazed.

[3]*Poor:* <50% ground cover.
Fair: 50 to 75% ground cover.
Good: >75% ground cover.

[4]Actual curve number is less than 30; use CN = 30 for runoff computations.

[5]CN's shown were computed for areas with 50% woods and 50% grass (pasture) cover. Other combinations of conditions may be computed from the CN's for woods and pasture.

[6]*Poor:* Forest litter, small trees, and brush are destroyed by heavy grazing or regular burning.
Fair: Woods are grazed but not burned, and some forest litter covers the soil.
Good: Woods are protected from grazing, and litter and brush adequately cover the soil.

Project Malvern By: RAD Date: 11/17/2003

Location _____ Checked: _____ Date: _____

Condition Proposed Conditions

Watershed				
Segment	a			
SHEET FLOW (Application to T_c only)				
1. Surface Description	woods			
2. Manning's roughness coefficient, n	0.4			
3. Flow Length, L (total L<300ft) ft.	75			
4. Two-yr 24-hr rainfall, P_2 in.	3.2			
5. Land slope, s ft./ft $\frac{382-376.5}{75}$	0.07			
6. $T_t = \frac{0.007 (nL)^{0.8}}{P_2^{0.5} s^{0.4}}$ hr.	**0.169**			
Segment				
Shallow Concentrated Flow				
7. Surface description (paved or unpaved)	unpaved			
8. Flow Length, L ft.	180			
9. Watercourse slope, s ft./ft. $\frac{376.5-382}{180}$	0.069			
10. Average velocity, V (figure 3-1) ft./s.	4.24			
11. $T_T = \frac{L}{3600V}$ hr.	**0.0118**			
Segment				
Channel Flow				
12. Cross Sectional flow area, a $ft.^2$				
13. Wetted perimeter, p_w ft.				
14. Hydraulic radius, $r = a/p_w$ ft.				
15. Channel slope, s ft./ft.				
16. Manning's roughness coeffienct, n				
17. $V = \frac{1.49 r^{2/3} s^{1/2}}{n}$ ft./s.				
18. Flow Length, L ft.				
19. Tt = L/3600 V hr.				
20. Total Tc from sheet, shallow, and channel flow hr.	**0.181**			

Sheet 10 of 1

Sheet flow

Sheet flow is flow over plane surfaces. It usually occurs in the headwater of streams. With sheet flow, the friction value (Manning's n) is an effective roughness coefficient that includes the effect of raindrop impact; drag over the plane surface; obstacles such as litter, crop ridges, and rocks; and erosion and transportation of sediment. These n values are for very shallow flow depths of about 0.1 foot or so. Table 3-1 gives Manning's n values for sheet flow for various surface conditions.

For sheet flow of less than 300 feet, use Manning's kinematic solution (Overton and Meadows 1976) to compute T_t:

$$T_t = \frac{0.007\,(nL)^{0.8}}{(P_2)^{0.5}\,s^{0.4}} \qquad \text{[Eq. 3-3]}$$

where

T_t = travel time (hr),
n = Manning's roughness coefficient (table 3-1),
L = flow length (ft),
P_2 = 2-year, 24-hour rainfall (in), and
s = slope of hydraulic grade line (land slope, ft/ft).

This simplified form of the Manning's kinematic solution is based on the following: (1) shallow steady uniform flow, (2) constant intensity of rainfall excess (that part of a rain available for runoff), (3) rainfall duration of 24 hours, and (4) minor effect of infiltration on travel time. Rainfall depth can be obtained from appendix B.

Table 3-1.—Roughness coefficients (Manning's n) for sheet flow

Surface description	n[1]
Smooth surfaces (concrete, asphalt, gravel, or bare soil)	0.011
Fallow (no residue)	0.05
Cultivated soils:	
Residue cover ≤20%	0.06
Residue cover >20%	0.17
Grass:	
Short grass prairie	0.15
Dense grasses[2]	0.24
Bermudagrass	0.41
Range (natural)	0.13
Woods:[3]	
Light underbrush	0.40
Dense underbrush	0.80

[1] The n values are a composite of information compiled by Engman (1986).
[2] Includes species such as weeping lovegrass, bluegrass, buffalo grass, blue grama grass, and native grass mixtures.
[3] When selecting n, consider cover to a height of about 0.1 ft. This is the only part of the plant cover that will obstruct sheet flow.

Shallow concentrated flow

After a maximum of 300 feet, sheet flow usually becomes shallow concentrated flow. The average velocity for this flow can be determined from figure 3-1, in which average velocity is a function of watercourse slope and type of channel. For slopes less than 0.005 ft/ft, use equations given in appendix F for figure 3-1. Tillage can affect the direction of shallow concentrated flow. Flow may not always be directly down the watershed slope if tillage runs across the slope.

After determining average velocity in figure 3-1, use equation 3-1 to estimate travel time for the shallow concentrated flow segment.

Open channels

Open channels are assumed to begin where surveyed cross section information has been obtained, where channels are visible on aerial photographs, or where blue lines (indicating streams) appear on United States Geological Survey (USGS) quadrangle sheets. Manning's equation or water surface profile information can be used to estimate average flow velocity. Average flow velocity is usually determined for bank-full elevation.

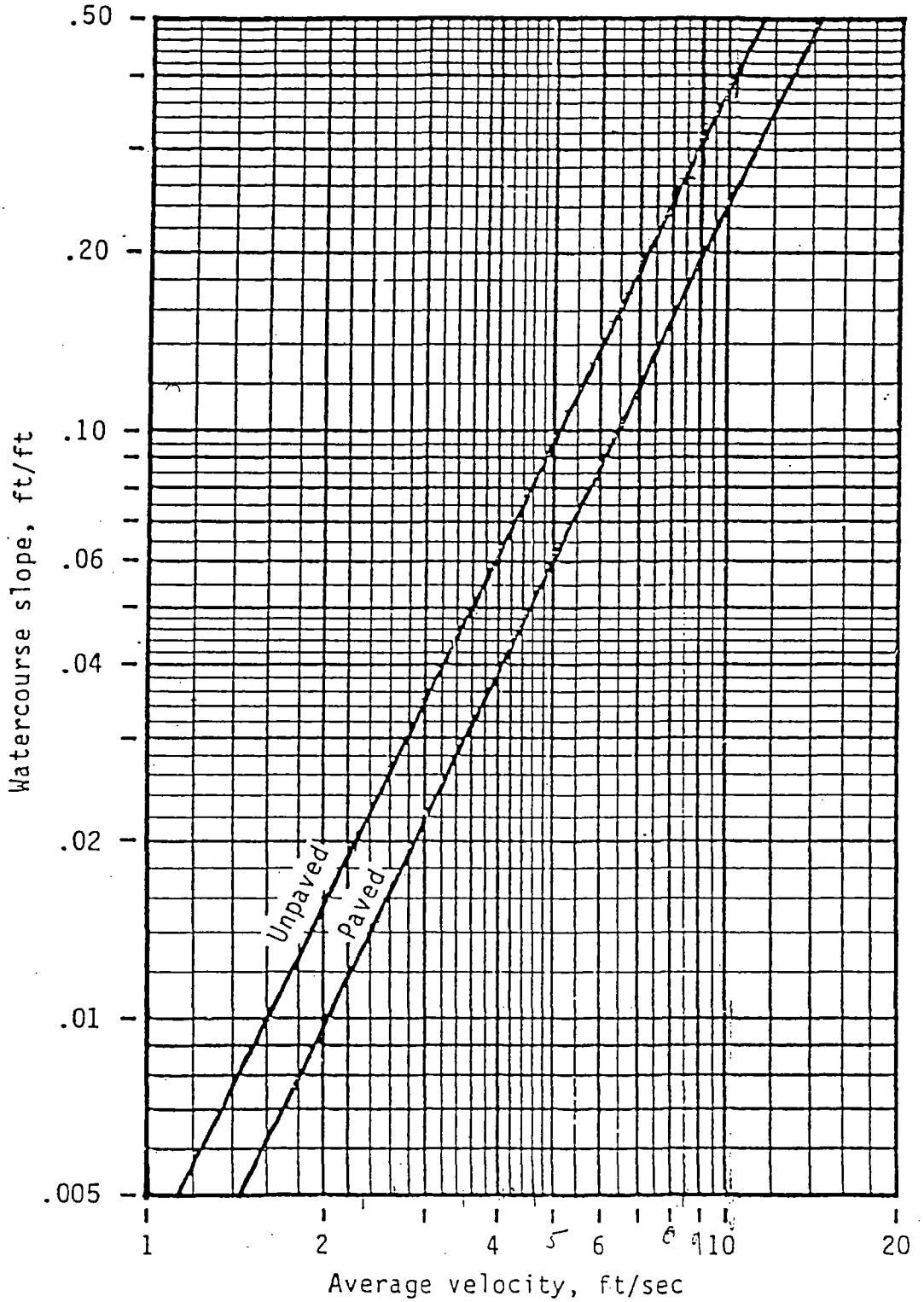

Figure 3-1.—Average velocities for estimating travel time for shallow concentrated flow.

TABULAR HYDROGRAPH METHOD

Version 2.10
Project : MALVERN User: RAL Date: 11-17-2003
County : CHESTER State: PA Checked: ____ Date: ____

Subtitle: PROPOSED CONDITIONS

Total watershed area: 0.008 sq mi Rainfall type: II Frequency: 25 years

---------- Subareas ----------

	A
Area(sq mi)	0.01
Rainfall(in)	5.6
Curve number	75
Runoff(in)	2.94
Tc (hrs)	0.18
(Used)	0.20
TimeToOutlet	0.00
Ia/P	0.12

Time Total ---------- Subarea Contribution to Total Flow (cfs) ----------

(hr)	Flow	A
11.0	0	0
11.3	1	1
11.6	1	1
11.9	4	4
12.0	9	9
12.1	17	17
12.2	18P	18P
12.3	11	11
12.4	6	6
12.5	4	4
12.6	3	3
12.7	2	2
12.8	2	2
13.0	2	2
13.2	1	1
13.4	1	1
13.6	1	1
13.8	1	1
14.0	1	1
14.3	1	1
14.6	1	1
15.0	1	1
15.5	1	1
16.0	1	1
16.5	1	1
17.0	0	0
17.5	0	0
18.0	0	0
19.0	0	0
20.0	0	0
22.0	0	0
26.0	0	0

P - Peak Flow

APPENDIX D

PERMIT EQUIVALENCIES, PERMITS AND APPROVALS

PECO ENERGY

PECO Energy Company
Application for Electric Service & Meter

M-24175(front) Rev. 12/97 ~~Rev. 7/96~~

INSTRUCTIONS:

Please complete the ***front*** page of this request and return to the PECO Energy Company service building ***(listed below)*** in the area service is required. Incomplete information may result in a delay in processing.

All work must comply with PECO Energy Company Electric Service Requirements manual and be inspected by an approved inspection agency. (City of Philadelphia requests may be shared with Licenses & Inspections.) Not all service voltages are available in all areas. ***Before purchasing electrical equipment or proceeding with any wiring,*** information regarding service availability and meter location should be obtained from the company.

A credit application and agreement must be completed ***if the customer has not had PECO Energy Company service within the last 60 days.*** The company reserves the right to ***cancel*** this request if no further communication is received from the customer ***within 90 days*** of PECO Energy Company response date.

CONTRACTOR & BUILDER SERVICES:
1-800-454-4100

PHILADELPHIA REGION
(City of Philadelphia)
830 S. Schuylkill Ave.
Phila., PA 19146-2395
(215) 731-2340
Fax # (215) 731-2327

DELCHESTER REGION
(Delaware, Chester & York)
175 N. Caln Rd.
P.O. Box 3011
Coatesville, PA 19320
(610) 380-2494
Fax # (610) 380-2600

BUCKSMONT REGION
(Bucks & Montgomery)
400 Park Ave.
Warminster, PA 18974
(215) 956-3270
Fax # (215) 956-3240

NEW RESIDENTIAL CONSTRUCTION
(All Counties)
1111 Old Eagle School Rd.
Wayne, PA 19087
(610) 971-8900
Fax # (610) 971-8930

CUSTOMER'S NAME: Golder Associates, Inc.

**ADDRESS TO BE SERVED: 200 Old Phoenixville Pike
APARTMENT / LOT #:
POST OFFICE: Malvern
ZIP CODE: 19355
*UTILITY POLE #: 4777
*SUBDIVISION / DEVELOPMENT: N/A
TOWNSHIP/MUNICIPALITY/WARD#: East Whiteland

* If Applicable
** Please use this address when applying for underwriter's inspection

CUSTOMER'S BILLING ADDRESS: 1951 Old Cuthbert Rd. -OR- Ste. 301
PECO ENERGY ACCOUNT #:
POST OFFICE: Cherry Hill, NJ
ZIP CODE: 08034
TELE. #: 856-616-8166

SEND REPLY TO:

ELECTRICIAN'S OR BUILDER'S NAME: Golder Associates, Inc.
Reply Requested by: 3 / 1 / 03
ADDRESS: 1100 Hector St. Ste. 225
POST OFFICE: Conshohocken
ZIP CODE: 19428
TELE. #: 610-941-8173 x1443
FAX #: 610-941-8174

CURRENT CONSTRUCTION STATUS:
[X] Not Started – Date customer will start work: 3 / 1 /03 [ ] In Progress [ ] Completed
Approximate Date Service Requested: 4 / 1 / 03

CUT THROUGH? [ ] Yes [ ] No
If yes, date cut through

CUSTOMER COMMENTS:

SUBMITTED BY: DATE:
Enclosures: [X] Site Plans [ ] Single Line Diagram [ ] Substation Arrangement

TYPE OF REQUEST:
[X] New Service [ ] Load Increase/Decrease [ ] Reintroduction
[ ] Temporary Service [ ] Upgrade/Changes [ ] Other
[ ] Separation of Wiring [ ] Service Relocation

TYPE OF SERVICE: Please include site plan.
[ ] RESIDENTIAL [ ] COMMERCIAL
[ ] Single House [ ] Mobile Home [ ] Store [ ] Office
[ ] Apartment [ ] Modular Home [ ] Industrial [ ] Warehouse
[ ] Duplex [ ] Town House [ ] Restaurant
[ ] Other [X] Other Treatment System
Area of Building 200 Sq. Ft.

SERVICE CHARACTERISTICS:
[ ] Underground [ ] Aerial

	PHASE	VOLTS	WIRES
X	1	120	2
	1	120/240	3
	2	120/240	5

PHASE	VOLTS	WIRES
3	240	3
3	120/240	4
3	120/208	4
3	277/480	4
3	13200	3 or 4
3	33000	3 or 4

AMPS: 100

METER INFO:
[X] Single Meter Required [ ] Two Meters, Commercial (General/Totalizer)
[ ] Two Meters, Residential, Off-Peak [ ] Multiple Meters Total No.

HEATING/AIR CONDITIONING:
[ ] Heat Pump ____ Tons
[ ] Central Air ____ Tons [X] Resistance Type Back-up
[ ] Natural Gas [ ] Propane [ ] Other

CHARACTERISTICS OF NEW OR ADDITIONAL LOAD: (For commercial service only)

TYPE	CONNECTED LOAD (kW.)	PECO ENERGY USE ONLY–DEMAND SUMMER (kW.)	WINTER(kW.)
LIGHTING			
HEATING			
AIR/COND.			
MISC.			
TOTAL			

Include single line diagram and substation arrangement if appropriate

TOTALIZER LOAD ____ KW GENERAL LOAD ____ KW

LARGEST MOTOR SPECIFICATIONS:

QUANTITY	1
SIZE (HP)	15
LOCKED ROTOR CURRENT	A
MOTOR CODE LETTER	1
PHASE	240
VOLTAGE	<1
FREQ. OF STARTING (per hr.)	pump
PURPOSE	well

ELECTRICAL EQUIPMENT PRODUCING HARMONICS:	CONNECTED LOAD (KW)
Electric Furnaces	0
Arc Welders	0
Adjustable Speed Drives (ADS)	0
Heat Pumps and A/C with ADS	0
AC to DC Converters	0
High Efficiency Lighting	0
Uninterruptible Power Supplies (UPS)	0

APPENDIX E

REMEDIAL ACTION CONSTRUCTION RELATED PLANS

APPENDIX E1

HEALTH AND SAFETY PLAN

Golder Associates Inc.

1951 Old Cuthbert Road, Suite 301
Cherry Hill, NJ 08034
Telephone (856) 616-8166
Fax (856) 616-1874
www.golder.com

HEALTH AND SAFETY PLAN FOR REMEDIAL ACTION CONSTRUCTION QUALITY ASSURANCE ACTIVITIES MALVERN TCE SUPERFUND SITE WHITELAND TOWNSHIP, PA

Prepared for:

Chemclene Site Defense Group

Prepared by:

Golder Associates Inc.
1951 Old Cuthbert Road, Suite 301
Cherry Hill, New Jersey 08034

Approved by:

_____ _____

Project Manager Date

_____ _____

Health and Safety Officer Date

September 2004 Project No: 003-6000

TABLE OF CONTENTS

SECTION		PAGE
1.0	GENERAL INFORMATION AND SCOPE OF WORK	E1-1
1.1	Project Description	E1-1
1.2	Site Background	E1-2
1.3	Project Safety Requirements	E1-3
1.3.1	Designated Safety Personnel and Chain of Command	E1-4
1.3.2	Medical Surveillance and Training	E1-5
1.3.3	First Aid	E1-6
1.3.4	Communications	E1-6
1.4	General Hygiene and Conduct Guidelines	E1-6
1.5	Site Safety Meetings	E1-8
1.6	Acronyms and Definitions	E1-8
2.0	HAZARD EVALUATION	E1-10
2.1	Potential Chemical Hazards	E1-10
2.2	Potential Physical Hazards	E1-10
2.2.1	Heat Stress	E1-10
2.2.2	Cold Stress	E1-11
2.2.3	Confined Space Hazards	E1-11
2.2.4	Electrical Hazards	E1-11
2.2.5	Other Physical Hazards	E1-11
2.3	Potential Biological Hazards	E1-12
2.4	Signs and Symptoms of Exposure	E1-13
2.4.1	Chemical Exposure	E1-13
2.4.2	Physical Exposure	E1-13
2.4.3	Biological Exposure	E1-15
2.5	Task Risk Analysis	E1-16
3.0	SITE MONITORING AND ACTION LEVELS	E1-17
3.1	VOC Monitoring	E1-17
3.2	Nuisance Dust Monitoring	E1-18
4.0	ON-SITE CONTROL	E1-20
4.1	Site Communication System	E1-20
4.2	Site Safety Zone and Access Control	E1-20
4.3	Personal Protective Clothing and Respiratory Protection	E1-21
4.4	Decontamination	E1-22
5.0	CONTINGENCY AND EMERGENCY RESPONSE PLANS	E1-25
5.1	Medical Emergency Response Plan	E1-25
5.2	Fire and Explosions	E1-27
5.3	Chemical Exposure First Aid	E1-27
5.4	Unforeseen Circumstances	E1-28
5.5	Accident and Incident Reports	E1-28
5.6	Emergency Contacts	E1-28

LIST OF TABLES

Table E1-1 Emergency Response Numbers
Table E1-2 Potential Site Hazards
Table E1-3 Site Chemicals of Potential Concern
Table E1-4 Airborne Exposure Limits-Volatile Organic Compounds
Table E1-5 Comparative Risk Analysis
Table E1-6 Air Monitoring and Action Level Requirements

LIST OF FIGURES

Figure E1-1 Site Location Map
Figure E1-2 Site Layout
Figure E1-3 Hospital Route

LIST OF ATTACHMENTS

Attachment E1-1 Field Procedure Change Authorization Form
Attachment E1-2 Site Health and Safety Plan Acknowledgement
Attachment E1-3 Report Form for Unsafe Conditions and Practices
Attachment E1-4 Incident Report Form

1.0 GENERAL INFORMATION AND SCOPE OF WORK

1.1 Project Description

This Health and Safety Plan (HASP) has been prepared by Golder Associates Inc. (Golder Associates) on behalf of the Chemclene Site Defense Group (CSDG) for use by Golder Associates for Remedial Action Construction Quality Assurance Activities for the Malvern TCE Superfund Site (Site) in East Whiteland Township, Pennsylvania that may be requested by the Independent Quality Assurance Team (IQAT). This HASP is an updated version of the HASP provided with the Remedial Design Work Plan (RDWP) for the Site, completed in 2000. This plan was prepared in accordance with the NIOSH/OSHA/USCG/EPA "Occupational Safety and Health Guidance Manual for Hazardous Waste Site Activities," 29 CFR 1910.120, 29 CFR 1926, and applicable Federal and state regulations and guidelines. This HASP will be reviewed as appropriate when field and/or laboratory data becomes available and amended to ensure that the proper level(s) of protection are maintained.

This plan covers all construction quality assurance activities including visually inspecting work, sampling, and quality assurance testing, as descried in the Construction Quality Assurance Plan (CQAP) that are part of the FDA/MA soil remedy design, FDA/MA groundwater remedy design, and MPA soil remedy design.

The Remedial Action Contractor (RAC), the RAC's subcontractors and other contractors selected by the CSDG and approved by the United States Environmental Protection Agency (USEPA) will be responsible for producing and implementing their own HASP (RAC HASP) for construction activities at the Site. The RAC HASP must incorporate the minimum requirements specified in the Technical Specifications and the minimum requirements of this HASP, including the monitoring requirements as specified in Section 3.0. The RAC will be responsible for enforcing the requirements of the HASP for all activities as conducted by any entities at the Site. The HASP must also provide the safety requirements specific to these remediation activities, an evaluation of the chemical, physical and biological hazards involved, a description of the site communication system and site access, and contingency and emergency response plans.

1.2 Site Background

The following is a brief description of the Site. For more detailed information see the Final Design Report.

The Site is located in East Whiteland Township, Chester County, Pennsylvania as shown on Figure E1-1. The Site is owned and operated by Chemclene Corporation (Chemclene), which currently operates a hauling operation and stores and sells hydrogen peroxide at the 258 North Phoenixville Pike location. These operations will be discontinued prior to remedial action construction. Former operations at the Site have included the storage and sale of new solvents and hydraulic fluid, and the distillation recycling of spent chlorinated solvents for resale of the purified materials. The Site encompasses approximately five acres along the southeast side of Bacton Hill, and consists of a Main Plant Area (MPA), located at 258 N.P. Pike, and a former Disposal Area (FDA)/Mounded Area (MA) connected by a narrow meadow corridor that approximately parallels the Williams Transcontinental natural gas pipeline (Williams Transco pipeline) right-of-way, as shown on Figure E1-2.

Existing facilities at the MPA that will be dismantled as part of the remedial action construction include a former distillation building (Main Building), concrete pad storage areas, an office trailer, and an open garage. The Main Builiding and the open garage sustained heavy fire damage subsequent to the Remedial Investigation. Two stainless steel, horizontal, cylindrical, aboveground storage tanks, located along the northwestern Site boundary, are reportedly used as part of the current Chemclene business to store hydrogen peroxide. A pile of debris and empty storage tanks are located at the former above ground storage tank area, north of the main storage area. Other debris, used equipment, vessels, and reportedly empty aboveground tanks are located in other areas of the MPA. The MPA, as shown on Figure E1-2, covers approximately 1.25 acres.

The FDA/MA is located approximately 1,900 feet southwest of the MPA, and consists of a partially wooded area covering approximately 2 acres surrounded by a heavily forested area, as shown on Figure E1-2. As stated in the Final Data Summary Report (CH2MHill, April 1995), borrow pits (approximate 15 feet in depth) were excavated in the FDA portion of the area in 1952 to supply construction materials for the Williams Transco pipeline that runs through the Site as shown on Figure E1-2. These pits were reportedly filled by Chemclene over time with

discarded drums, equipment, rubbish, and soil. Subsequently, Chemclene, with oversight from the Pennsylvania Department of Environmental Protection (PADEP; formerly PADER), removed approximately 300 drums and impacted soil/debris from two excavations to a depth of approximately 15 feet over several remedial activities from 1981 through 1984. Remnant soil piles generated from the material removal activities exist adjacent to the excavations. The FDA is currently surrounded by an 8-foot-high chain-link fence.

The MA portion of the area is located immediately west of the FDA. Formerly, earth mounds existed as the ground surface expression of drums buried in shallow excavations and/or natural depressions. The drums were removed by Chemclene in the early 1990's and reportedly the soils were separated and returned to the excavations, leaving the MA in its current essentially flat ground surface condition (CH2MHill, 1997a).

1.3 Project Safety Requirements

The level of protection and the procedures specified in this HASP are based on the information currently available and represent the minimum health and safety requirements to be observed by all Site personnel engaged in the remedial action construction. Unknown conditions at the Sites may exist and known conditions may change. Should any situation arise which is beyond the scope of the personal protection and decontamination procedures specified herein, work activities shall be immediately halted pending discussion between the on-site Health and Safety Coordinators (HSC), the Health and Safety Officers (HSO), and/or Project Managers, and revision of the specified health and safety procedures, as needed. Any revision of the health and safety procedures will be recorded in the Field Procedure Change Authorization Form, or similar form shown in Attachment E1-1, and will require authorization from the RAC HSO and the Project Manager.

All Golder Associates personnel engaged in any of the project activities listed in the CQAP must read this HASP and the RAC's HASP carefully and complete the Safety Briefing Form in Attachment E1-2. Personnel who have any questions or concerns regarding implementation of these plans are encouraged to request clarification from the appropriate HSO or HSC. All personnel must follow the designated health and safety procedures, be alert to the hazards associated with working close to vehicles and equipment, and above all else, use common sense and exercise reasonable caution at all times.

1.3.1 Designated Safety Personnel and Chain of Command

The primary personnel responsible for the health and safety of Site employees on this project are the RAC HSO, HSC, Golder Associates HSO, RAC and Project Manager.

Each subcontractor will have a designated HSC. HSCs are responsible for assuring that the designated procedures are implemented in the field. The RAC HSC is responsible for the health and safety of the subcontractors and for coordinating site safety activities. The RAC HSC has the authority to stop work for health and safety reasons.

The RAC HSO has overall responsibility for establishing appropriate health and safety procedures for the project and will have the requisite authority to implement those procedures including, if necessary, the authority to temporarily suspend field activities for health and safety reasons. The Golder Associates HSO has overall responsibility for establishing appropriate health and safety procedures associated with construction quality assurance activities performed by Golder Associates.

The RAC Project Manager also has the authority to take whatever actions may be necessary, based on the advice and direction of the RAC HSC and/or RAC HSO, to provide a safe working environment for all project personnel.

The ultimate responsibility for the health and safety of the individual employee rests with the employee, and his or her colleagues. Each employee is responsible for exercising the utmost care and good judgment in protecting his or her own health and safety and that of fellow employees. Each employee relies on information being shared to ensure that potentially unsafe conditions are addressed and avoided. Should any employee observe a potentially unsafe condition or situation, it is the responsibility of that employee to immediately bring the observed condition to the attention of the appropriate health and safety personnel as designated above, and to follow-up the verbal notification by completing the "Unsafe Conditions and Practices" report form provided in Attachment E1-3.

Should an employee find himself or herself in a potentially hazardous situation, the employee shall immediately discontinue the hazardous procedure(s) and either personally affect appropriate preventive or corrective measures, or immediately notify the RAC HSO, RAC HSC,

or RAC Project Manager of the nature of the hazard. Golder Associates personnel shall also notify the Golder Associates HSO. In the event of an immediately dangerous or life-threatening situation, any employee always has "stop work" authority.

Unsafe work practices or procedures are never justified by "extenuating circumstances" such as budget or time constraints, equipment breakdown, changing or unexpected conditions, etc. In fact, the opposite is true. Under stressful circumstances all project personnel must be mindful of the potential to consciously or unconsciously compromise health and safety standards, and be especially safety conscious. All Site personnel are required to consider "safety first" at all times.

1.3.2 Medical Surveillance and Training

All personnel engaged in field activities on this project must have baseline physical examinations and be participants in their employer's medical surveillance program. This program meets, at a minimum, the requirements of 29 CFR 1910.120(f). Procedures beyond baseline physical and routine medical surveillance are not planned for the tasks listed in the CQAP.

All project personnel, who have the potential to contact contaminated soil, water, and/or air, must be trained in hazardous waste site investigation health and safety in accordance with 29 CFR 1910.120(e) including respiratory protection, personal protective clothing, decontamination, hazard recognition and the proper calibration and use of the combustible gas indicator (CGI), photoionization detector (PID), and colorimetric detector tubes. Personnel must have appropriate refresher courses as detailed in 29 CFR 1910.120(e).

Personnel who operate specialized equipment (e.g., drill rigs, excavators, etc.) shall be trained by their employer(s) to operate such equipment.

These training requirements apply to all employees unless the employer can demonstrate that the operation does not involve employee exposure, or the reasonable possibility for employee exposure, to safety and health hazards. Some non-intrusive activities (e.g. supply and equipment delivery, limited surveying activities, above grade mechanical and electrical construction) may meet this exemption. In that site conditions are subject to change, the training requirements for non-intrusive activities will be reviewed on a case-by-case basis. These determinations will be

included in the RAC HASP. The RAC HSC will make the determination on the case-by-case basis and will consult the RAC HSO as necessary.

1.3.3 First Aid

A first aid kit shall be available in all field vehicles during all site activities. This kit shall be of an appropriate size in relation to the number of personnel on site and shall include at a minimum two pairs of latex gloves, CPR barrier and eye wash solution, in addition to first aid supplies (e.g., bandages, first aid cream, antiseptic). See Section 5.1 of this document for emergency response procedures.

1.3.4 Communications

The Site will be equipped with a telephone located in the field trailer and a mobile phone located in a designated field vehicle. Note that mobile phones operating outside of their original territory may not contact the proper (i.e., local) emergency response authorities. Mobile phone users would be better served by dialing the full appropriate emergency response numbers listed in Table E1-1.

Additionally, if field operations require that two or more field teams work at the Site, but beyond visual/aural range, the "Buddy System" will be used. Workers or field teams that are not in the line of sight of each other may be equipped with two-way radios to maintain communication. Workers will also provide each other with assistance in checking the integrity of each other's PPE, and will notify the RAC HSO in case of emergency.

The protective equipment requirements for some tasks may necessitate the use of respiratory protection which could adversely affect communications. In such instances, the field team will review basic hand signal communications during a safety briefing prior to donning respiratory protection equipment.

1.4 General Hygiene and Conduct Guidelines

The following general personal hygiene and work practice guidelines are intended to prevent injuries and adverse health effects. These guidelines represent the minimum standard procedures

for reducing potential risks associated with various aspects of this project and are to be followed by all Site personnel at all times.

- If the RAC HSC deems that a respirator is necessary, any facial hair that would interfere with the proper fit of such equipment will not be worn.

- A multi-purpose dry chemical fire extinguisher, a complete field first aid kit, and a bottle of emergency eye wash solution shall be maintained in every field vehicle.

- Do not handle waste samples or any other potentially contaminated items unless wearing NBR (nitrile butadiene rubber) or neoprene rubber gloves, or equivalent, as a minimum. Employees should treat all unknown soil and water as if it were contaminated. Always make an effort to approach any potentially contaminated feature/facility from upwind.

- Thoroughly wash hands and face before eating or putting anything in your mouth (i.e., avoid hand to mouth contamination).

- Eating, drinking, chewing gum or tobacco and smoking are permitted only in areas designated by the RAC HSC. Under no circumstances will these activities be permitted in the immediate vicinity of any intrusive activities (e.g., drilling or excavating).

- Be alert to potentially changing exposure conditions, for example, as evidenced by perceptible odors or oily sheen on water.

- Do not, under any circumstances, enter or ride in or on any backhoe bucket, materials hoist, or any other similar device not specifically designed for carrying human passengers.

- Be alert to the symptoms of fatigue and heat/cold stress, and their affects on the normal caution and judgment of personnel.

- Noise may pose a health and safety hazard, particularly during excavation, drilling, and construction activities. A good rule of thumb is if it is necessary to shout to communicate at a distance of three feet in steady state (continuous) noise, hearing protection should be worn. Likewise, any impact noises from activities (e.g., driving casing on a drilling operation) that is loud enough to cause discomfort, would also indicate the need for hearing protection. Hearing protection is available and is included in the standard field kit along with hard hat and safety glasses.

- Always use an appropriate level of personal protection. Reduced levels of protection can result in preventable exposure; excessive levels of safety equipment can impair efficiency and increase the potential for accidents to occur.

- Be aware of the effect of inclement weather (rain, snow, ice, lightning) has on Site safety. Be prepared to suspend activities as conditions warrant.

- Extreme caution must be used when excavating, drilling, or performing other activities occur near overhead utility lines. The National Drilling Federation recommends a

minimum distance of 20 feet between the lines and drill rig. Contact the local power company if you have any questions regarding utility line status or voltage. In addition, underground utilities must be positively located and marked prior to intrusive activities.

- All personnel are required to wear orange colored vests when working in the proximity of public rights-of-way and/or parking areas. Additionally, traffic cones and other warning devices may be required if the public rights-of-way are obstructed.

1.5 Site Safety Meetings

The RAC HSC shall conduct an initial Site safety briefing and routine meetings for all personnel and subcontractors directly involved in implementing the remedial action construction activities. The RAC shall also conduct a daily meeting, during which health and safety issues relevant to the day's activities would be one of the items discussed.

The RAC HSC or his/her designee shall conduct and document the date, time, content and attendees of these meetings, which will be held as needed. The topics to be covered are determined by the task activities, and should include:

- Weather and traffic related safety issues.
- Hazards specific to the task(s) and protective equipment.
- Unusual site conditions/areas.
- Safety problems and issues.
- Changes in the HASP.

1.6 Acronyms and Definitions

Terms used in the HASP, are as follows:

ACGIH - American Conference of Governmental Industrial Hygienists

Authorized Personnel - Person, including task-specific personnel, project personnel, oversight personnel, contractors and consultants whose presence is authorized.

Breathing Zone - The worker's breathing zone is an imaginary sphere of 2-foot radius surrounding the head.

CQAP – Construction Quality Assurance Plan.

Contamination-Reduction Zone - The area designated as required for removal of contaminants from personnel and equipment. This area is adjacent to the Exclusion Zone.

Contaminant of Concern – The constituents that have been identified at the Site that are expected to cause the greatest concern for chemical safety risks.

Contractor/Consultant - Person or firm, retained or hired by CSDG and/or their contractors, to carry out and/or supervise portions of the activities conducted at the Site.

Exclusion Zone - The area to which all personnel entering must be directly involved in the ongoing work, have designated personal protective equipment (PPE), and meet training and medical monitoring requirements. The Exclusion Zone will be defined as required by an approximate 25-foot radius around the work area, which will be suitably marked.

HASP - Health and Safety Plan

HSC – On-Site Health and Safety Coordinator

HSO - Health and Safety Officer

IDLH - Immediate Danger to Life and Health

IQAT – Independent Quality Assurance Team

MSDS - Material Safety Data Sheets, which provide information on the physical, chemical, and hazardous properties of chemical compounds.

NIOSH - National Institute of Occupational Safety and Health

OSHA - Occupational Safety and Health Administration

Oversight Personnel - Any person, designated by the state or federal government, who is assigned to carry out oversight work.

PEL - Permissible Exposure Limit

PPE - Personal Protective Equipment

PPM - Parts per million; expressed as ppm(v) for gases and vapors.

RAC – Remedial Action Contractor

REL - Recommended Exposure Limit

SAP - Sampling and Analysis Plan

Site - The Malvern TCE Superfund Site on 258 North Phoenixville Pike, East Whiteland Township, Pennsylvania.

Support Zone - The area outside the Exclusion Zone that is considered clean for the purpose of the HASP. It is used for transfer of equipment and materials into the work site (i.e., support) and providing communications between the various zones.

TLV - Threshold Limit Value

2.0 HAZARD EVALUATION

Potential Site hazards include chemical hazards, physical hazards, and biological hazards. Each of these groups of potential hazards is addressed in Table E1-2.

2.1 Potential Chemical Hazards

Results of past sampling activities at the site indicate that there has been chemical contamination of the soil and groundwater. Table E1-3 lists the Chemicals of Potential Concern (COPC) selected for the Site. The chemicals selected are VOCs and PCBs based on the magnitude of historic detection, frequency of detection, and potential toxicity. Table E1-4 summarizes the airborne exposure limits for these contaminants. The chemical hazard associated with the reported chemical concentrations in the groundwater and soil is toxicity. Potential hazards include:

(1) Inhalation of organic vapors due to the presence of Volatile Organic Compounds (VOCs) in the soil and groundwater;

(2) Inadvertent ingestion of potentially toxic substances via hand to mouth contact or deliberate ingestion of materials inadvertently contaminated with potentially toxic materials. Included in this list are VOCs and Polychlorinated Biphenyls (PCBs); and

(3) Dermal exposure and possible percutaneous (skin) absorption of certain lipophilic (readily absorbed through the skin) organic chemicals including benzene.

Exposure via the ingestion route can be controlled effectively by the means of good personal hygiene habits, and prohibition of smoking, eating, drinking and chewing in contaminated areas. Similarly, dermal exposure can be controlled by good personal hygiene and appropriate clothing. Inhalation hazards are addressed in Section B.2.4.

2.2 Potential Physical Hazards

2.2.1 Heat Stress

Working in protective clothing can greatly increase the likelihood of developing heat stress. Heat stress can result in health effects ranging from transient heat fatigue to serious illness or death. The signs and symptoms of heat stress are presented in Section B.2.2.1. When ambient temperatures exceed 80 degrees Fahrenheit (70 degrees when wearing Tyvek coveralls), workers shall be monitored for signs of heat stress. Temperature readings shall be taken in accordance

with OSHA requirements using an oral thermometer, ear thermometer, or other method approved by the HSC.

2.2.2 Cold Stress

Personnel exposed to cold temperatures (especially during windy conditions) may be subjected to cold stress in the form of frost nip, frost bite or hypothermia. Signs and symptoms of cold stress are described in Section 2.2.2. When cold weather occurs, workers shall be monitored for signs of frost nip. Temperature readings shall be taken in accordance with OSHA requirements using an oral thermometer, ear thermometer, or other method approved by the HSC. Extra caution will be exercised when working in windy conditions and/or when clothing becomes wet.

2.2.3 Confined Space Hazards

No confined space work by Golder Associates or its subcontractors is anticipated. Should such work become necessary, a Confined Space Entry Permit will be completed and an addendum to this HASP will be prepared. Written authorization by the Golder Associates Project Manager and Golder Associates HSO will be required prior to conducting any confined space work.

2.2.4 Electrical Hazards

Since electrical equipment will be used on-site, there is a potential for electrical hazard. The electrical hazard control measures will include, but not be limited to, the following:

- When digging, make the one-call to locate utility lines;
- Make sure all electrical equipment is properly grounded;
- Use qualified electricians to perform all electrical work;
- Inspect all extension cords daily for damage and ground continuity;
- Cover or elevate electric wire in work areas to protect from damage;
- Keep all plugs and receptacles away from water; and,
- Use water and weatherproof supplies when available.

2.2.5 Other Physical Hazards

All Site employees must take note of physical hazards which are identified during site safety briefings. These hazards include, but are not limited to: steep slopes, soft sediments, muck, creeks (trips, falls, and drowning); sharp debris from underbrush (puncture wound); overhead utilities, public traffic, over-exposure to the sun and slippery and/or congested walking surfaces

(falls). Orange vests will be worn when working near public rights-of-way. Work areas such as drilling or excavating must be delineated using high visibility caution tape.

During drilling activities no more than two lengths of drill rod may extend above the top of the rig derrick at any time.

Field personnel must be alert to the hazards associated with site vehicles, drill rig operation, heavy equipment, and powered hand-held equipment operations. These hazards include noise, crushing injuries, overhead hazards, and pinch points. Personnel must be alert to weather-related hazards (e.g., lightning) or the possibility of increased hazard due to weather (e.g., slipping on mud or ice).

2.3 Potential Biological Hazards

Contact with waste materials can lead to infected cuts. Personnel shall follow the guidelines for general hygiene in Section B.1.4 and follow first aid procedures for disinfection of cuts and abrasions in Section B.5.3.

The Site area may contain ticks, which can transmit Rocky Mountain Spotted Fever and Lyme Disease. During tick season (March to November), employees will check for ticks. Light colored clothing should be worn and any openings (shirt and pant cuffs) should be secured to inhibit tick movement from clothing to skin. The use of insect repellents should be considered if its use will not interfere with sampling activities. Personnel must check with their Project Manager before using repellents. Field personnel will acquaint themselves with the symptoms of tick-borne diseases detailed below and will contact a physician as well as the RAC HSO and Golder Associates HSO if a disease is suspected.

The Site area may also harbor potentially harmful snakes and other small animals. Personnel must be alert to the potential dangers posed by wildlife. See Table E1-1 for the number to the Poison Control Center in case of a snake bite.

The Site area may contain poison ivy which can be recognized by an oily sheen on the leaf and/or three leaflets together or similar vegetation. The active substances can be transmitted by direct skin contact and via contact with contaminated clothing. Field personnel should avoid contact with any vegetation that can irritate the skin.

2.4 Signs and Symptoms of Exposure

2.4.1 Chemical Exposure

The health effects associated with the chemical contaminants at the site are varied. Golder Associates personnel who experience any of the following symptoms should report the occurrence to the RAC HSC and Golder Associates HSO promptly:

- skin, eye, or respiratory system irritations;
- skin rashes/burns;
- headaches/dizziness;
- nausea/gastrointestinal tract problems;
- muscle spasms/tremors;
- chills; and/or
- fatigue.

Note that the above symptoms are not necessarily caused by chemical exposure. Any serious medical problem should be promptly referred to professional medical care. If personnel experience any of the above symptoms, the RAC HSC shall evacuate the area (upwind if possible) if necessary and evaluate affected personnel for signs and symptoms of exposure. Appropriate first aid measures shall be taken. The activity will not resume until the atmospheric conditions are evaluated using monitoring instruments by personnel wearing Level C (or B, if Level C was utilized when the incident occurred) PPE. Atmospheric conditions will be evaluated by monitoring for concentrations of VOCs and dust (as necessary) as described in Section B.3.0.

2.4.2 Physical Exposure

The signs of heat fatigue are as follows:

- Heat rash may result from continuous exposure to heat or humid air.
- Heat cramps caused by heavy sweating with inadequate electrolyte replacement. Signs and symptoms include:
  - ◊ muscle spasms; and
  - ◊ pain in hands, feet, and abdomen.

Heat exhaustion results from increased stress on various body organs, including inadequate blood circulation due to cardiovascular insufficiency or dehydration. Signs and symptoms include:

- pale, cool, moist skin;
- heavy sweating;
- dizziness;
- nausea; and
- fainting.

Heat stroke is the most serious form of heat stress. Temperature regulation fails and the body temperature rises to critical levels. Immediate action must be taken to cool the body before serious injury and death occur. Competent medical help must be obtained. Signs and symptoms are:

- red, hot, usually dry skin;
- lack of or reduced perspiration;
- nausea;
- dizziness and confusion;
- strong, rapid pulse; and
- coma.

Working in protective clothing can greatly increase the likelihood of heat fatigue, heat exhaustion, and heat stroke, the latter being a life threatening condition. Table III:4-2 of the OSHA Technical Manual provides permissible heat exposure threshold limits for employees to prevent these conditions. These limits are applicable when an employee is working in light clothing. If heavier protective clothing is required, these limits must be reduced by the correction factors provided in Table III:4-3 of the OSHA Technical Manual. When working in ambient temperatures greater than 80°F (70°F when in Level B equipment), employees shall use the 'buddy system' to monitor each other's pulse rate at the start of each rest period. A rest period shall consist of a continuous time period of at least five (5) minutes preferably in a shaded area. The personnel will not be assigned to other work during this rest period. If the pulse rate exceeds 110 beats per minute, the employee shall take his or her oral or ear temperature with a clean disposable calorimetric oral or ear thermometer. If the oral or ear temperature exceeds 99.6°F, the next work period shall be shortened by one third. The pulse rate and temperature shall be monitored again at the beginning of the next rest period; and if the oral or ear temperature exceeds 99.6°F, the work period shall again be shortened by one third, etc., until the temperature is below 99.6°F.

All employees are to be alert to the possibility and symptoms of heat stress. If heat stress is suspected, the employee will leave the work area, rest, cool off, and drink plenty of cool water/Gatorade/Squelcher or equivalent. Sufficient cool potable water and clean disposable cups shall be maintained at all times on-site. If the symptoms do not subside after a reasonable rest period, the employee shall notify the RAC HSC and seek medical assistance. Golder Associates personnel shall also notify the Golder Associates HSO.

Signs of cold stress include yellow or white patches of skin on the fingertips, nose and ears. These areas will be numb. The affected parts will be rewarmed gently and the patient will not return to work until additional protection (e.g., gloves, hard hat liner) is obtained. It is essential to prevent frostbite, as the person may become susceptible to future cold-related medical problems. Personnel are encouraged to change into dry socks after the lunch break as perspiration held by the socks prompts cooling of the feet. Should clothing become wet, it is imperative that the person change into dry clothes before resuming work. Wet clothing can lead to hypothermia. Symptoms of hypothermia include uncontrollable shivering, decreased physical and mental capabilities, and lowered body temperature. Persons exhibiting symptoms of cold stress or hypothermia will not return to work without the approval of the RAC HSC. Golder Associates personnel shall also receive approval from the Golder Associates HSO.

2.4.3 Biological Exposure

Since the bite of a tick has the potential to cause Rocky Mountain Spotty Fever, personnel should be aware that the symptoms include fever chills, headache, abdominal, muscle pain, and nausea. A red rash develops at the wrist and ankles two to five days after exposure. Symptoms develop two to fourteen days after exposure.

Lyme Disease is also spread by ticks. Symptoms include fatigue, stiffness (particularly in the neck). There may be a red circular rash. Fever may be present. Symptoms develop a few days to two years after exposure.

Personnel exhibiting symptoms of Rocky Mountain Spotted Fever or Lyme Disease should consult a medical professional immediately.

Personnel bitten by a snake or any other wildlife will immediately clean the wound and proceed to the hospital for medical evaluation.

Skin-sensitizing (poisonous) vegetation produces a bumpy, swollen rash at the point of contact. This rash is easily spread if the oil gets on the fingers. Wash affected area(s) including tools, as soon as possible. Use over-the-counter medications to reduce the irritation. Avoid scratching the rash. Cover the affected area(s) with clean dressings. Severe exposure may necessitate evaluation by a medical professional.

If personnel are in need of immediate first aid, the guidelines outlined in Section B.5.1 for emergency medical procedures will be followed.

2.5 Task Risk Analysis

Table E1-5 presents a comparative risk analysis based on anticipated field activities and hazards. All personnel will be aware that specific hazards and the associated potential severity may be influenced by weather, season, and fatigue.

3.0 SITE MONITORING AND ACTION LEVELS

Air monitoring is required during intrusive tasks. The RAC HSO shall determine the required monitoring frequency and the appropriate PPE action levels. The minimum requirements for the type of air monitoring and associated action levels, based on previous investigations, for each site activity are detailed in Table E1-6. The monitoring methods involved and their interpretation are discussed in the following sections. Intrusive activities have the potential for exposures to VOCs and PCBs.

3.1 VOC Monitoring

Volatile Organic Compounds that are of most concern from an inhalation standpoint are those that are moderately to highly toxic and have odor thresholds higher than their corresponding TLV. Since benzene and vinyl chloride are examples of such compounds, and because they are the COPCs that have the lowest OSHA PEL (TWA 1 ppm), they will be used as indicators of volatile organics. A PID with a 11.7 eV lamp will be used, to capture the other COPCs that have a IP greater than 10.6 eV for field screening purposes. PID readings will be taken at the Site boundary a minimum of 3 times per day when intrusive or contaminated soil handling operations are occurring. PID readings will be taken at the school a minimum of once per day when intrusive or contaminated soil handling operations are occurring. During VOC monitoring, consideration will be given to the wind direction.

The designated RAC HSC shall have on-site at all times during intrusive activities a Photovac MicroTip II or equivalent photoionization detector instrument. Calibration of the instrument must be checked daily prior to each day of use and then at least every four hours during use by introducing a known concentration of isobutylene gas in accordance with the manufacturer's instructions. Background levels must be established well upwind of any excavation, borehole, spoils pile, etc. During drilling or excavation activities, the RAC HSC shall determine the appropriate monitoring frequency, which shall be at the borehole or excavation and employee breathing zone at least every 15 minutes, or whenever there is any indication that concentrations may have changed (odors, visible gases, appearance of drill cuttings, etc.) since the last measurement.

The RAC HSO shall determine what additional monitoring is required. This monitoring shall, at minimum, include when a constant reading of >1 and ≤ 5 ppm[1] above background level is detected for more than 5 minutes in the breathing zone, a detector tube for vinyl chloride and benzene shall be used to determine airborne concentrations. If the vinyl chloride and benzene concentration is less than 1 ppm in the breathing zone, and the total VOC concentration does not exceed 5 ppm for more than five minutes in the breathing zone, the RAC HSOS shall determine if Level "D" PPE is appropriate. However, if a consistent reading > 5 ppm above background is detected for more than 5 minutes in the breathing zone or any peak > 25 ppm above background level in the breathing zone is detected, the PPE shall be upgraded at minimum to Level "C". If at any time the concentration of vinyl chloride exceeds 1 ppm in the breathing zone, the level of PPE shall be at a minimum upgraded to Level "B". The RAC HSO may approve engineering or administrative controls such as portable fans to reduce exposure to or generation of VOC concentrations and possibly eliminate the need for respiratory protection. The RAC HSO must be advised of conditions that warrant a change in the level of PPE and approve the revised procedures.

The RAC HSO will determine the required changeout frequency and type of respiratory cartridges. Given the rapid "break through" time of some substances, cartridges will at a minimum be replaced after each day of use or immediately upon an indication of "break through" (perceptible odors inside of the mask), whichever is less. High humidity situations (>80% relative humidity) may require cartridge replacement at a more frequent rate (every 4 hours).

Engineering controls such as covers or additional ventilation may if approved by the RAC HSO, be used in place of respiratory protection if it is demonstrated through monitoring that the engineering controls are effective in reducing airborne concentrations.

3.2 Nuisance Dust Monitoring

Nuisance dust has the potential for becoming a health concern during disruptive or intrusive activities such as drilling and excavation in the FDA/MA where, as reported in the USEPA ROD, PCBs have been detected. Activities that generate excessive dust will require engineering controls (e.g., water misting of the air and surrounding soil, upwind activities) before and during

[1] Humidity may increase PID readings to those above action levels, thus erroneously causing PPE upgrades.

the activities. At a minimum, dust monitoring activities should be conducted when engineering controls are ineffective as evidenced by chronic visible airborne dust. During dust monitoring, consideration will be given to the wind direction. Real time dust monitoring using a Mini-RAM or equivalent will be conducted and the airborne metal and PCB concentrations will be estimated using the maximum reported, or worst-case, soil metal and PCB concentrations.. The Mini-RAM will be calibrated according to manufacturer's instructions prior to field use. When collecting measurements using the Mini-RAM, the readings will be taken over a minimum period of 10 minutes in an area or areas representative of the worker breathing zone. The RAC HSC will record the average result for the interval.

Using the worst-case soil data, the RAC HSO will determine the appropriate action levels and actions. At a minimum, the following action levels will be used for determining the need to upgrade levels of protection:

INSTRUMENT	AIRBORNE CONCENTRATION IN BREATHING ZONE	ACTION NEEDED
Mini-RAM (Aerosol monitor)	> 2 mg/m^3 to 20 mg/m^3 sustained for 10 minutes or peaks > 25 mg/m^3	Use wet methods (water spray) or other engineering controls to reduce levels Use Level C PPE if water spray fails to reduce dust concentrations
	> 20 mg/m3 peak or sustained	Cease work and contact the RAC HSC

4.0 ON-SITE CONTROL

4.1 Site Communication System

Personnel will operate using the "buddy system." Each individual shall maintain visual/aural contact with another individual or group at all times. If more than one group is working at the Site and the groups are not within visual/aural communication range, two-way radios may be necessary to maintain communications.

4.2 Site Safety Zone and Access Control

No on-site safety zones are required for non-intrusive activities. During intrusive activities (e.g., drilling and excavation), an Exclusion Zone will be established by the on-site RAC HSC, as required). Monitoring will be periodically conducted at the downwind perimeters to assure that the concentrations are similar to background concentrations. If perimeter concentrations are greater than background concentrations for more than five minutes, the downwind perimeter shall be extended, where practical, or engineering controls will be implemented such that downwind and background concentrations are similar. Exposed materials will be contained or covered and perimeter monitoring will continue until ambient air concentrations upwind and downwind of the Exclusion Zone are equal. The limits of the Exclusion Zone will be marked with high visibility flagging tape or four or more traffic cones or similar devices.

The Exclusion Zone will be accessed through a marked Contamination Reduction Zone (CRZ). The CRZ shall be used for gross decontamination of both personnel and equipment items. It shall be configured to allow the decontamination of the field crew while upwind of the Exclusion Zone. The RAC HSC or his designee will assure that all personnel entering the Exclusion Zone wear the required protective equipment and that upgraded level of protection equipment is readily available.

As work activities will be conducted throughout the Site and off-property, a centralized decontamination facility will be used for the full decontamination of drilling, excavation, and sampling equipment and personnel.

All decontamination materials and liquids from all areas will be properly collected and will be secured in a fenced storage area until proper disposal occurs.

4.3 Personal Protective Clothing and Respiratory Protection

The following scheme will be used to designate the minimum required level(s) of personal protective equipment and respiratory protection: the alphabetical designations "B," "C," and "D" shall refer specifically to levels of respiratory protection, namely pressure-demand air supplying respirators with escape provisions, air purifying respirators, and no respiratory protection, respectively. Since potential dermal exposure hazards may require a wide variety of personal protective clothing without regard to the required level of respiratory protection, the numerical designations "1," "2," and "3" will be used to specify the level of protective clothing that is to be employed in addition to the designated level of respiratory protection as described below (i.e., the level of protective equipment can be completely defined by a designation of "D-1," "C-2," etc.). The required levels of protective equipment and upgrade criteria for each work task are specified in Table E1-6. All equipment and clothing shall be inspected by the wearer prior to use. All suspect protective equipment will be rejected and disposed of as non-contaminated waste.

The minimum level of personal protective clothing required during Site activities will be D-1, which consists of the following:

LEVEL D-1, PROTECTIVE CLOTHING

1. Standard work clothes (long pants and sleeved shirt);
2. Steel toed boots;
3. Safety glasses;
4. Orange safety vests (when working near public traffic);
5. Hard hats (when an overhead hazard is possible) and;
6. Hearing protection (during drilling and other noise producing activities).

Protective clothing will be upgraded during sampling activities and will consist of the following:

LEVEL D-1, MODIFIED PROTECTIVE CLOTHING

1. Level 1 protective clothing;
2. Liner latex gloves; and
3. Outer NBR gloves.

LEVEL D-2, PROTECTIVE CLOTHING

1. Level 1 protective clothing;
2. Inner latex gloves;
3. Outer NBR gloves; and
4. Polycoated Tyvek or Tyvek coveralls with taped openings.

Field personnel may upgrade to Polycoated Tyvek or Tyvek coveralls (D2) where it is probable that there will be substantial contact with subsurface soils or groundwater containing elevated levels of VOCs and/or PCBs (i.e., the MA). Polycoated Tyvek or Tyvek coveralls might also be worn when working in muddy conditions.

If conditions are found which are beyond the required Level(s) of Protection, personnel are to leave the area immediately and obtain the required protective equipment. Should the personnel suspect an inhalation hazard (e.g., unusual and continuous odors, dizziness, or respiratory irritation), they are to immediately move upwind from the area and promptly notify the RAC HSC. Work will not proceed in these areas until the nature of the hazard has been assessed by air monitoring and additional protective measures are employed to the satisfaction of the HSC. Re-entry will be from an upwind position (when possible). Monitoring will precede re-entry. Personnel who experienced symptoms will not re-enter the area until symptoms have subsided and additional equipment/precautions are employed as determined by the monitoring. Golder Associates employees exhibiting such symptoms shall notify the Golder Associates HSO. An examination by a physician may be prudent depending on the symptoms and duration.

4.4 Decontamination

Decontamination will involve two phases. Gross decontamination of personnel and equipment, comprising removal of mud by dry brushing or scraping, will take place in the Contamination Reduction Zone established at the site of each intrusive activity. Soil removed in this way will be collected and secured for off-site disposal. All personnel and equipment will undergo gross decontamination prior to moving to a new location within an area of the Site (i.e., MPA or FDA/MA). Prior to leaving the Site, personnel and equipment will undergo full decontamination at the central decontamination pad. Where appropriate to avoid possible cross contamination, (for example between installation of SVE wells) full decontamination of drilling tools, by steam cleaning, will also take place between investigation locations. A location for the on-site (within the fencelines) decontamination pad will be selected prior to mobilization of intrusive activities.

Decontamination Procedures

All personnel involved in intrusive activities and/or contaminated personnel shall decontaminate prior to leaving the site. The Decontamination Pad area shall have plastic sheeting on the ground

of sufficient size to contain the personnel, equipment and decontamination materials required. At a minimum, a typical Decontamination Area will require:

- 2 wash tubs (1 wash, 1 rinse);
- several scrub brushes;
- disposable towels and plastic bags;
- seating to facilitate boot removal;
- decontamination solution (e.g. Alconox);
- duct tape;
- hand soap;
- skin wash water source; and
- special rinse solutions for hand sampling tools (see SAP).

Personnel will follow the decontamination procedure below. At a minimum all personnel will wash their hands and face prior to eating, smoking or leaving the Site. The RAC HSC shall inspect personnel and non-disposable protective equipment for cleanliness prior to release from the Site.

Step 1: Equipment Drop
Deposit equipment used on-site (hand tools, sampling devices and containers, monitoring instruments, clipboards, etc.) on plastic drop cloths. Segregation at the drop reduces the probability of cross contamination. During hot weather operations, a cool down station may be set up.

Step 2: Outer Garment, Boots, and Gloves Wash and Rinse
Scrub boots, outer gloves and splash garments (if worn) with decontamination solution. Rinse off with water.

Step 3: Outer Glove Removal
Remove outer gloves (if worn). Deposit in container with plastic liner.

Step 4: Cartridge or Respirator Change (if applicable)
If worker leaves exclusion zone to change cartridges (or respirator), this is the last step in the decontamination procedure. Worker's canister is exchanged, new outer gloves donned, joints taped, and worker returns to duty.

Step 5: Boot, Gloves and Inner Garment Removal (if applicable)
Boots, protective suit, inner gloves (if worn) removed and deposited in disposal containers.

Step 6: Respirator Removal (if applicable)
Respirator is removed. Avoid touching face with fingers, respirator deposited on plastic sheet.

Step 7: Field Wash
Hands and face are thoroughly washed. Shower as soon as possible.

Monitoring equipment and hand tools shall be retrieved and decontaminated using methods appropriate for the type of equipment. Containing equipment in plastic (as applicable) prior to site entry will expedite decontamination. The RAC HSC shall inspect the equipment for cleanliness.

Certain sampling equipment (e.g., hand sampling tools) may require specific decontamination procedures and/or chemicals.

Drill rigs and excavation equipment decontamination will follow the methods described in the RAC Decontamination Plan. At a minimum, a stone pad will be provided for tire cleaning over which trucks and other vehicles not used for intrusive activities will drive across before entering the clean zone. All portions of equipment used for intrusive activities (excavators, drill rigs, etc.) will e cleaned by a high pressure or other appropriate method. The RAC shall be responsible for installing, inspecting, and, if necessary, repairing a vehicle decontamination pad. All solids collected and liquids used during decontamination will be controlled, handled, stored, and disposed of appropriately by the RAC.

All acid use is restricted to the centralized decontamination area. This area will be equipped with an eye wash station.

All chemicals brought to the Site will have the appropriate Material Safety Data Sheet(s) (MSDS) provided to the RAC HSC. This requirement also applies to drilling materials.

All disposable personal protective equipment will be double bagged in plastic bags and disposed of as municipal wastes. All decontamination materials will be drummed in 55-gallon drums. The solids and liquids will be separated and subsequently disposed as Investigation Derived Waste.

5.0 CONTINGENCY AND EMERGENCY RESPONSE PLANS

If an unanticipated, potentially hazardous situation arises as indicated by visible contamination, unusual or excessive odors, Site personnel shall temporarily cease operations, move away to a safe area, and contact the RAC HSC. The following procedures have been established as a guidance for emergency situations that might occur during Site and off-property activities. Prior to starting work at the Site, the local emergency response services will be contacted and informed that field activities will be in progress. Site personnel will familiarize themselves with the location of the nearest phones and medical facilities on arrival at the Site. In the event of a serious emergency situation (e.g. medical problems beyond routine first aid, explosive gas concentrations, or fire beyond incipient stage), Site personnel shall contact the Malvern Police Department, inform them of the nature of the emergency, and then notify the RAC HSC. When help arrives, Site personnel shall defer all emergency response authority to appropriate responding agency personnel. Emergency notification information is summarized in Table E1-1.

East Whiteland Township is served by local police, medical and fire services and is able to provide first response to all emergencies which might occur at the Site or off-property.

5.1 Medical Emergency Response Plan

The nature of chemical contamination on this project is not anticipated to present an immediate threat to human health. Other than removal of outer protective garments and gross contamination (e.g., mud), immediate emergency treatment of injuries should therefore generally take precedence over personal decontamination.

Should any person on the Site be injured or become ill, initiate the following emergency response plan and notify the RAC HSC as soon as possible:

1. If able, the injured person should proceed to the nearest available source of first aid. If the injured party is extremely muddy, remove outer garments and if necessary, wash the injured area with soap and water. If the "injury" involves a potential overexposure to hazardous gases or vapors, (headache, dizziness, nausea, disorientation), get the victim to fresh air and take him or her to the Paoli Memorial Hospital, 255 West Lancaster Ave (Route 30), (see Figure E1-3) telephone (610) 648-1000, for a complete physical examination as soon as possible.

   If the injury involves foreign material in the eyes, immediately flush the eyes with emergency eye wash solution and/or rinse with copious amounts of potable water. Obtain

or administer first aid as required. If further medical treatment is required, seek professional medical assistance as discussed below.

Appropriate measures should be taken to protect the privacy of workers in connection with putting on and taking off of protective clothing.

First aid providers shall wear latex gloves when providing any first aid. Severe injuries involving large quantities of blood require that first aid providers don Tyvek coveralls and safety glasses in addition to gloves.

2. If the victim is unconscious or unable to move, or if there is any evidence of spinal injury, do not move the injured person unless absolutely necessary to save his or her life, until the nature of the injury has been determined. Administer rescue breathing using a CPR barrier if the victim is not breathing, control severe bleeding and immediately seek medical assistance as discussed below.

3. If further medical treatment is required and

   a. the injury is not severe, contact Paoli Memorial Hospital (610) 648-1000 and take the injured party to the hospital by private automobile.

      Directions to the Hospital (see Figure E1-3):

      - When leaving the site, make a right onto Phoenixville Pike
      - Drive southwest and make left onto Conestoga Road
      - Drive about 0.5 miles and merge onto US 202 Northbound
      - Drive for about 1.5 miles and take the PA-29 South exit towards Malvern
      - Immediately off the exit, turn right onto South Morehall Road
      - Drive about 0.5 miles and turn left onto Lancaster Pike
      - Lancaster Pike becomes West Lancaster Ave after about 0.5 miles

   b. If the injury is severe, immediately call the Malvern Police Department at (610) 647-0261 or 911 using a standard phone.

   In both cases, if decontamination is not undertaken, appropriate precautions should be taken to avoid transfer of contaminants to vehicles and other facilities. This can be done by using plastic sheeting or the exposure blanket contained in the first aid kit.

4. Any injured person taken to the hospital shall be accompanied by an individual designated by the RAC HSC to ensure prompt and proper medical attention. After proper medical treatment has been obtained, the designated companion should notify the RAC HSO and prepare a written report. Golder Associates personnel shall also notify the Golder Associates HSO. Site personnel shall maintain their medical insurance identification at the Site whenever they are on Site.

   In the event that any personnel are injured at the site during any phase of the Investigation, all available technical information and supporting documentation shall be provided to any treating physicians, or treating health care workers or facilities.

5.2 Fire and Explosions

Dry chemical fire extinguishers are effective for fires involving ordinary combustibles such as wood, grass, flammable liquids, and electrical equipment. They are appropriate for small, localized fires such as a drum of burning refuse, a small burning gasoline spill, a vehicle engine fire, etc. No attempt should be made to use these extinguishers for well established fires or large areas or volumes of flammable liquids.

In the case of fire, prevention is the best contingency plan. There will be no smoking on Site except in pre-designated areas. In the event of a fire during excavation, drilling, or well installation, personnel shall attempt to extinguish the fire with on-site fire extinguishers. If a fire cannot be controlled in this manner, personnel shall notify the RAC HSC and follow the procedure outlined below.

Catalytic converters on the underside of vehicles are sufficiently hot to ignite dry grass. Personnel should avoid driving over dry grass that is higher than the ground clearance of the vehicle, and be aware of the potential fire hazard posed by the catalytic converter, at all times. Never allow a running vehicle to sit in a stationary position over dry grass or other combustible materials.

1. In the event of a fire or explosion:
2. If the situation can be readily controlled with available resources without jeopardizing the health and safety of Site personnel, take immediate action to do so. If not:
3. Isolate the fire to prevent spreading, if possible.
4. Clear the area of all personnel working in the immediate vicinity.
5. Immediately notify site emergency personnel and the Malvern Fire Department. (610) 647-0693 or 911 using a standard phone.

5.3 Chemical Exposure First Aid

In an event of exposure to chemicals through inhalation:

1. Move the victim to an up-wind location for fresh air.
2. Signal for help.
3. Initiate CPR to revive the victim, if necessary.
4. Contact the Malvern Police Department, if necessary.

For exposure through dermal route (including eyes):

1. Wash the affected area with copious fluids for at least fifteen (15) minutes (Signal for help if necessary).
2. If irritation persists, seek professional medical care.

For ingestion:

1. Drink a large amount of water to dilute the contaminant(s).
2. Transport the victim to the hospital. Take a copy of this HASP to the hospital.

If decontamination is not undertaken prior to transporting the victim to the hospital, appropriate precautions should be taken to avoid transfer of contaminants to vehicles and other facilities.

5.4 Unforeseen Circumstances

The health and safety procedures specified in this plan are based on the information available at the time. Unknown conditions may exist, and known conditions may change. This plan cannot account for every unknown or anticipate every contingency. Additionally, the RAC may decide to perform additional activities or utilize alternate methods that may require additional procedures, technical considerations or contingencies. Should personnel suspect or encounter areas of substantially higher levels of contamination, or should any situation arise which is obviously beyond the scope of the safety procedures specified herein, work activities shall be modified (such as by moving to another location) or halted pending discussions with the RAC HSO and implementation of appropriate protective measures.

5.5 Accident and Incident Reports

If an incident or accident occurs, the RAC HSO and RAC Project Manager shall be notified and an Incident Report (example shown in Attachment E1-4) shall be completed. Golder Associates employees shall also notify the Golder Associates HSO and complete Attachment E1-4. The report shall be completed by an eyewitness (if possible) along with assistance from the RAC HSC. The report will be forwarded to the RAC HSO as soon as possible for further investigation or follow-up.

5.6 Emergency Contacts

Emergency notification information is summarized in Table E1-1. The RAC shall confirm the emergency contact information when preparing the RAC HASP.

1.0 INTRODUCTION

This Final (1090%) Design Report (Report) has been prepared by Golder Associates Inc. (Golder Associates) on behalf of the Chemclene Site Defense Group (CSDG) for the Malvern TCE Superfund Site (Site) located in East Whiteland Township, Chester County, Pennsylvania. The Final (100%) Design Report~~Pre-Final (90%) Design Report (Report)~~ addresses remedial design activities required under the Consent Decree entered into by the United States Environmental Protection Agency (USEPA) and the CSDG (Civil Action 99-3715, date of entry December 13, 1999). The Final (100%) Design Report ~~Pre-Final (90%) Design Report~~ includes a ~~pre~~-final (9100%) design for the Soil Vapor Extraction (SVE) alternative remedy, which will be constructed in place of the 1997 USEPA Record of Decision (ROD) selected remedy of excavation and off-site treatment/disposal to remediate soils impacted by volatile organic compounds (VOCs) in the Former Disposal Area/Mounded Area (FDA/MA) portion of the Site. The USEPA has agreed to amend the ROD to incorporate this alternative remedy in parallel to the design work. The Final (100%) Design Report ~~Pre-Final (90%) Design Report (Report)~~ incorporates Agency (USEPA and ~~Pennsylvania~~ Department of Environmental Protection (PADEP)) and ~~Construction and Demolition Management, Inc. (CDM)~~ comments provided in ~~a~~ letter from the USEPA on the ~~Preliminary (35%)~~Pre-Final (90%) Design Report (PFD) (Golder Associates, ~~January 2003~~June 2004).

1.1 General Site Description

The Site is located in East Whiteland Township, Chester County, Pennsylvania as shown on Figure 1-1. The Site is owned and operated by Chemclene Corporation (Chemclene), whose current activity includes the storage, processing, sale and transportation of hydrogen peroxide at the 258 North Phoenixville Pike location. Former operations at the Site have primarily included the storage and sale of new chlorinated solvents and the distillation recycling of used chlorinated solvents for resale of the purified materials. The Site encompasses approximately 5 acres along the southeast side of Bacton Hill, and consists of a Main Plant Area (MPA), located at 258 North Phoenixville Pike, and the FDA/MA to the west. The FDA/MA are connected to the MPA by a long, narrow corridor that approximately parallels the Williams Transcontinental, natural gas pipeline (Williams Transco pipeline) right-of-way, as shown on Figure 1-2.

Facilities at the MPA portion of the Site have included a former distillation building (Main Building), concrete pad storage areas, an office trailer, and an open garage. The Main Building

USEPA decontaminated the Former Container Storage Area. Chemclene disposed of the solids and decontamination fluids off-site;

- Tank Removal: Six former underground storage tanks were excavated and decontaminated by Chemclene. Chemclene disposed of the decontamination fluids and the tanks off-site;
- Main Building: The Main Building was damaged in the fire. As a result, Chemclene implemented a subsurface soil investigation beneath the former Main Building, as well as in other areas of the Site; and,

- RCRA Closure of Main Building, Loading Dock, and Chemical Laboratory: According to the Remedial Action Report, Chemclene completed the RCRA closure of these portions of the MPA. The report states that the only remaining closure work was the closure of the walls and floors of the Main Building, which could not be completed due to the fire.

In September 2000, Chemclene submitted the Remedial Action Report detailing the completion of these remedial action and RCRA closure components. Per CSDG's conversations with the USEPA, it is understood that USEPA has approved this report and the MPA is considered closed under RCRA and does not require additional decontamination.

On December 13, 1999, the U.S. District Court issued its order regarding the entering of the Consent Decree between the CSDG and the USEPA for execution of the remaining remedy elements.

Golder Associates, on behalf of the CSDG, prepared a Remedial Design Work Plan (RDWP), which was submitted to USEPA on May 4, 2000 (Golder Associates, 2000). Two subsequent responses to USEPA and PADEP comments were prepared and submitted to the Agencies on August 16, 2000 and October 18, 2000. These three documents (the initial RDWP and the two response to comments documents) comprised the entire RDWP, which was approved by USEPA on October 31, 2000.

The Pre-Design Investigation (PDI) was implemented in accordance with the RDWP between November 2000 and January 2002. During the course of performing the PDI, an alternative technology for remediating soils in the FDA/MA portion of the Site (soil vapor extraction with limited excavation) was identified as potentially being more effective than the excavation and off-site disposal remedy specified in the USEPA ROD. Therefore, with USEPA's approval, a SVE pilot study was conducted during the PDI. The results of the PDI and the SVE Pilot Study were presented to USEPA and PADEP in a Pre-Design Investigation Report (PDI Report; Golder

16. Remove accumulated vegetative matter from sidewalls and base of existing excavations. Dewater, solidify with absorbent and/or mix with soil in a stockpile to the extent necessary to remove free liquids;

17. The existing excavations will be backfilled immediately after dewatering and removal of vegetative matter. Backfill existing excavations using soil from non-PCB impacted soil piles, as a general clean fill, to less than 2 feet below final grade surface, and then low permeability clean fill to within 6 inches of the final grade and finished with 6-inch topsoil layer to final grade and vegetate. Compact using appropriate methods to reduce future subsidence;

18. If, during the excavation activities, open excavations become filled with water, then the excavations can be dewatered using a submersible pump, and water will be placed in a temporary storage tank for settling, prior to sampling, characterization and disposal of the liquid. Stormwater will be diverted around excavations to minimize the potential for excavations to become filled with water;

19. Remove soil from remainder of designated PCB-impacted soil remediation area, including soil beneath PCB-impacted soil piles, as required, to provide 2 feet of clean fill over area. Place excavated soil in appropriate soil stockpile;

20. Sample and characterize excavated soil at a rate of one sample per 25 cubic yards[5]. Soil sampling and analyses will be performed in accordance with the Remedial Action Sampling and Analysis Plan. Remediation waste characterization will be performed in accordance with the contained-in determination;

21. Backfill shallow excavated areas with clean fill: 18 inches of low permeability general fill. Clean general fill can be obtained from off-site sources and shall be certified free of contamination or tested ~~in accordance with~~ the Soil Clean-up Standards or PADEP's Act II Standards for clean fill prior to use on-site. See Section 02223 of the Specifications for additional information on determining the requirements for clean fill. Backfilling of the 18-inch thick general fill layer will be performed in two compacted lifts to reduce future subsidence;

22. Final grading of the FDA shall be completed within 6 inches of material suitable for sustaining vegetative growth and, as necessary, to provide a smooth surface to facilitate installation and operation of the SVE system; and,

23. Review and present plan for remediation waste disposal to the Owner's Representative for acceptance prior to scheduled off-site transportation and disposal/reuse. The Owner's Representative will forward plan to Agencies for final acceptance. Following acceptance from Engineer and Agencies, receive hazardous waste roll-off containers or other transport vehicles for the transportation of remediation waste off-site for disposal/reuse.

[5] Consider implementing remediation waste characterization early in the schedule (e.g., at or prior to mobilization), to the extent practical, to facilitate implementation of subsequent steps.

Performance Standard X.E.3

The wells and creek sampling points shall be sampled quarterly for the first three years. The samples shall be analyzed for VOCs and natural attenuation parameters at each sampling location. The natural attenuation parameters will be determined by USEPA in consultation with PADEP during Remedial Design. Based on the findings of the first three years of sampling, the appropriate sampling frequency for subsequent years will be determined by USEPA in consultation with PADEP.

Clarification to Performance Standard X.E.3

Since the issuance of the ROD, there are a number of factors that indicate that the quarterly frequency of groundwater quality monitoring is excessive. These factors include:

1. Groundwater now flows in a northeasterly direction toward the MPA, groundwater will be actively remediated at the MPA, and there are no immediate downgradient receptors to FDA/MA groundwater;

2. Valley Creek is not hydraulically downgradient from the FDA/MA;

3. Hill Brook Circle is hydraulically upgradient and has been connected to a water supply pipeline; and,

4. Given the historic database and relative groundwater velocities, quarterly sampling is not necessary to confirm these trends or detect changes that may need to be further evaluated.

Alternatively, quarterly sampling and water level monitoring for the first year (i.e., five events, including a baseline event and four subsequent quarterly events) would provide an initial database that could be used to assess the potential variability in groundwater concentrations northeast of the FDA/MA. Should this monitoring indicate substantial changes in groundwater quality, then quarterly monitoring would be continued until this potential variability stabilizes, at which time semi-annual monitoring would be implemented through the remainder of the 3-year sampling period. Should there be little variability detected during the first four monitoring events, then future monitoring would be conducted on a semi-annual basis.

Performance Standard X.E.4

The cap shall not be breached or adversely affected. The capped area may continue to be used for commercial operations or other activities as long as the cap is not adversely affected. Institutional controls shall be implemented to accomplish this.

Clarification to Performance Standard X.B.9

In accordance with this requirement specified in this Performance Standard, the selected cap will be appropriate for anticipated activities associated with the MPA groundwater remedy. Future Site use may require modifications to the cap in the future, however, future use of the property will be limited to exclude any activities, modifications, or operations that would interfere with the integrity of the constructed remedy. All intended uses should be reviewed and approved by a registered professional engineer.

4.2.2 Regulatory Guidance

There are a number of technical and regulatory guidance documents available that may be applicable to the cap design depending on the ultimate cap section selected. The primary technical guidance that was utilized for the selection and design of the MPA soil cap was the *Technical Guidance for RCRA/CERCLA Final Covers, USEPA, Office of Solid Waste and Emergency Response, April 2002.*

4.2.3 Operation and Maintenance Requirements

From a practical perspective and consistent with the ROD Performance Standard X.B.1, the cap should function with minimum maintenance.

4.3 Design Basis

The design basis includes Site-specific technical information that was used to complete the design of the cap and, as such, fulfills the Design Basis Report requirements of the Consent Decree. This information includes soil sample analyses results used to define the lateral extent of the cap and surface topography used to define the grading and surface water management of the cap as described below.

Lateral Extent of Cap

As discussed in further detail in the PDI Report (PDI Report Section 3.3), soil sample analyses collected by USEPA and Chemclene were evaluated in the RDWP and used to define the lateral

Geomembrane Layer: a 40-mil thick geomembrane will be used.

Cushion Layer: a minimum 6-inch thick layer of grading fill will be placed to attain the required slope and provide for a stable base for subsequent cap system components.

4.4.3 Design Analysis

As indicated in the PDR, the design of the selected cap will consider and complete, where appropriate, the following geotechnical and engineering analyses:

- Slope Stability Analysis;
- Cap Stability Analysis;
- Frost Depth Analysis;
- Evaluation of Erosion Potential;
- Settlement/Differential Settlement Analysis; and
- Infiltration Models such as Water Balance or Hydrologic Evaluation of Landfill Performance (HELP) Evaluation (for drainage layer design, where applicable).

Further evaluation has determined that based on the relatively flat slope of approximately 2.5% on average, slope stability and cap stability analysis is not warranted. The remaining analysis is described in the following paragraphs.

Frost Depth Analysis/Wet-Dry Cycle Analysis

Geomembranes do not need to be placed below the frost zone according to published data on low temperature performances of geomembranes (Mills and Budiman, 1991; Peggs et al., 1991). Samples tested at low temperatures showed an increase in tensile strength and decrease in strain at failure compared to samples tested at ambient temperature. However, under low temperature, failure strain was still in the order of several hundred percent, typical of a ductile material. Therefore, low temperature embrittlement of geomembranes (GM) is not a design concern. This is consistent with USEPA (2002) guidance, which indicated that neither "GCLs nor GMs appear to be vulnerable to freeze-thaw damage."

Although the geomembrane itself will not be affected by freezing, there is a potential for objects below the geomembrane to be uplifted by frost heave if the frost penetrates below the geomembrane. Placement of the cap will reduce the availability of water for freezing also. The potential for uplifted objects to damage the geomembrane will also be minimized by proof-rolling

TABLE E1-1

EMERGENCY RESPONSE NUMBERS [1]

Site Location Address	258 North Phoenixville Road, East Whiteland Township, PA
Telephone located in	Field trailer (standard) Field vehicles (mobile)

Emergency	911 (standard phone)
Ambulance	911 (standard phone)
Fire	Malvern Fire Company: 610-647-0693 East Whiteland Volunteer Fire Department: 610-644-8558
Police	Malvern Police Department: 610-647-0261 East Whiteland Township Police Department: 610-647-2100
Poison Control	800-722-7112 or 800-222-1222
Hospital:	Paoli Memorial Hospital: 610-648-1000
Project Manager	To Be Determined
Site Health and Safety Coordinator	To Be Determined
Health and Safety Officer	To Be Determined
Client Contact	Chris Young/*de maximis* (610-435-1151)
EPA National Response Center	800-424-8802
PADEP, Southeast Regional Office Emergency Response	484-250-5900
Gas Pipeline Emergency	Williams Transco: 800-440-8475

UTILITY MARKER EMERGENCY TELEPHONE NUMBERS

Utility Type	Utility Name	PA One Call Color Code	Emergency Telephone Number
Water	Philadelphia Suburban Water Co.	Blue	1-800-711-4779
Gas	PECO Energy	Yellow	1-800-841-4141
Electric	PECO Energy	Red	1-800-841-4141
Telephone/Cable	Verizon	Orange	1-800-275-2355
Sewer	East Whiteland Township, Sewer Division	Green	1-610-6442985 1-610-647-2100 (after hours)
PA One Call System: 1-800-242-1776			

[1] This information shall be confirmed by the RAC prior to the initiation of construction activities and properly posed.

TABLE E1-2
POTENTIAL SITE HAZARDS

	TASKS					
Hazardous	**Drilling/ Well Installation**	**Site Walk**	**Soil Excavation**	**Soil Sampling**	**Groundwater Monitoring/ Sampling**	**Vapor Sampling**
Contaminants of Concern Exposure	X		X	X	X	X
OSHA Chemicals Exposure	X		X	X	X	X
Mechanical Equipment/Construction	X	X	X	X	X	
Lifting and Material Handling	X		X	X	X	
Slip/Trip/Fall	X	X	X	X	X	X
Electrical	X		X	X	X	
Fire and Explosion	X	X	X	X	X	X
Heat/Cold Stress	X	X	X	X	X	X
Vehicular Traffic	X	X	X	X	X	X
Noise	X	X	X			X
Exposure to sun	X	X	X	X	X	X
Poisonous Plants	X	X	X	X	X	X
Snakes/Spiders/Insects	X	X	X	X	X	X

TABLE E1-3

SITE CHEMICALS OF POTENTIAL CONCERN

CONTAMINANT
Chloroform
Trichloroethene (TCE)
1,1-Dichloroethane (1,1-DCA)
1,1-Dichloroethene (1,1-DCE)
1,2-Dichloroethane (1,2-DCA)
Tetrachloroethene (PCE)
1,1,1-Trichloroethane (1,1,1-TCA)
1,1,2,2-Trichloroethane
Vinyl Chloride
Methylene Chloride
PCBs
Benzene
Ethylbenzene
Toluene
Xylene

Table E1-4
Airborne Exposure Limits
Volatile Organic Compounds

Chemical	OSHA PEL	NIOSH REL	IP
Benzene	1 ppm	0.1 ppm	9.24 eV
1,1,1-Trichloroethane	350 ppm	350 ppm	11 eV
1,1,2,2-Tetrachloroethane	5 ppm	1 ppm	11.1 eV
1,1-Dichloroethane	100 ppm	100 ppm	11.06 eV
1,1-Dichloroethene	NE	minimize	10 eV
1,2-Dichloroethane	50 ppm	1 ppm	11.05 eV
Chloroform	50 ppm	2 ppm	11.42 eV
Ethylbenzene	100 ppm	100 ppm	8.76 eV
Methylene Chloride	25 ppm	NE (carcinogen)	11.32 eV
Tetrachloroethene	100 ppm	minimize	9.32 eV
Toluene	200 ppm	100 ppm	8.82 eV
Trichloroethene	100 ppm	25 ppm	9.45 eV
Vinyl Chloride	1 ppm	NE (carcinogen)	9.99 eV
Xylenes (Total)	100 ppm	100 ppm	8.56 eV

OSHA PEL: Occupational Safety and Health Adminstration Permissable Exposure Limit
NIOSH REL: National Institute of Occupational Safety and Health Recommended Exposure Limit
ACGIH TLV: American Conference of Governmental Industrial Hygienists Threshold Limit Value
IP: Ionization Potential
ppm: parts per million
minimize: minimize exposure
mg/m3: milligrams per cubic meter
eV: electronVolts
NE: Not Established

Table E1-5
Comparative Risk Analysis

This table details site activities and anticipated associated risks by class: Biologial, Chemical, or Physical. Personal Protective Equipment level, weather, air temperature and season may effect the magnitude of some types of risk. Site personnel shall use prudent judgement at all times.

Task/Activity	Hazard		
	Biological	Chemical	Physical
Site Walk	L-M	L-M	M
Groundwater Sampling	L-M	L-M	L-M
Soil Sampling	L-M	L-M	M
Drilling, Well Installation	L-M	L-M	H
Soil Excavation	L-M	L-M	H
Vapor Sampling	L-M	L-M	L-M

Many of the chemicals identified in the on site media can enter through the skin. This route of entry must be protected whenever skin contact is probable.

L: Low
M: Moderate
H: High

Table E1-6
Minimum Air Monitoring and Associated Action Level Requirements (see footnote 1)

Task	Minimum Initial Level of Protection	Minimum Air Monitoring Equipment	Minimum Upgrade Criteria	Upgraded Level of Protection	Remarks (See footnote 2)
Walk Through	D1	NA	Condition Dependent	Condition Dependent	
Groundwater Sampling	D1, modified	PID	VOCs continuously > than 5 ppm for more than 5 minutes above background or any peak > than 25 ppm above background	C2	**Section B.3.1**
		Draeger Tube - Vinyl Chloride	VOCs continuously > 1 ppm and < or = to 5 ppm above background level for more than 5 minutes, a detector tube for vinyl chloride shall be used to determine airborne concentrations.	Vinyl Chloride > 1ppm Temporarily cease work until concentration subsides and evacuate immediate area or B2	
		PID	Continuously greater than 25 ppm, or frequent peaks > than 50 ppm	Temporarily cease work until concentration subsides and evacuate immediate area or B2	
Soil Sampling	D1 / D2	PID	VOCs continuously > than 5 ppm for more than 5 minutes above background or any peak > than 25 ppm above background	C2	**Section B.3.1**
		Draeger Tube - Vinyl Chloride	VOCs continuously > 1 ppm and < or = to 5 ppm above background level for more than 5 minutes, a detector tube for vinyl chloride shall be used to determine airborne concentrations.	Vinyl Chloride > 1ppm Temporarily cease work until concentration subsides and evacuate immediate area or B2	
		PID	Continuously greater than 25 ppm, or frequent peaks > than 50 ppm, or vinyl chloride concentrations > 1 ppm	Temporarily cease work until concentration subsides and evacuate immediate area or B2	
Drilling/Soil Excavation	D1 / D2	PID	VOCs continuously > than 5 ppm for more than 5 minutes above background or any peak > than 25 ppm above background	C2	**Section B.3.1**
		Draeger Tube - Vinyl Chloride	VOCs continuously > 1 ppm and < or = to 5 ppm above background level for more than 5 minutes, a detector tube for vinyl chloride shall be used to determine airborne concentrations.	Vinyl Chloride > 1ppm Temporarily cease work until concentration subsides and evacuate immediate area or B2	
		PID	Continuously greater than 25 ppm, or frequent peaks > than 50 ppm, or vinyl chloride concentrations > 1 ppm	Temporarily cease work until concentration subsides and evacuate immediate area or B2	
		Mini-RAM (as necessary)	>2mg/m3 to 20 mg/m3 sustained for 10 minutes or peaks >25mg/m3	Use wet methods (water spray) or other engineering controls to reduce levels. Level C2 if water spray fails to reduce dust concentrations	**Section B.3.1** Should engineering controls be ineffective as evidenced by chronic visible airborne dust, real time aerosol monitoring using a Mini-RAM shall be conducted to determine dust concentrations and the appropriate Level of PPE.
			>20mg/m3 peak or sustained	cease work and contact Health and Safety Officer	
Vapor Sampling	D1 / D2	PID	VOCs continuously > than 5 ppm for more than 5 minutes above background or any peak > than 25 ppm above background	C2	**Section B.3.1**
		Draeger Tube - Vinyl Chloride	VOCs continuously > 1 ppm and < or = to 5 ppm above background level for more than 5 minutes, a detector tube for vinyl chloride shall be used to determine airborne concentrations.	Vinyl Chloride > 1ppm Temporarily cease work until concentration subsides and evacuate immediate area or B2	
		PID	Continuously greater than 25 ppm, or frequent peaks > than 50 ppm, or vinyl chlonde concentrations > 1 ppm	Temporarily cease work until concentration subsides and evacuate immediate area or B2	

Table E1-6
Minimum Air Monitoring and Associated Action Level Requirements (see footnote 1)

Task	Minimum Initial Level of Protection	Minimum Air Monitoring Equipment	Minimum Upgrade Criteria	Upgraded Level of Protection	Remarks (See footnote 2)
Well Installation	D1 / D2	PID	VOCs continuously > than 5 ppm for more than 5 minutes above background or any peak > than 25 ppm above background	C2	**Section B.3.1**
		Draeger Tube - Vinyl Chloride	VOCs continuously > 1 ppm and < or = to 5 ppm above background level for more than 5 minutes, a detector tube for vinyl chloride shall be used to determine airborne concentrations.	Vinyl Chloride > 1ppm Temporarily cease work until concentration subsides and evacuate immediate area or B2	
		PID	Continuously greater than 25 ppm, or frequent peaks > than 50 ppm, or vinyl chlonde concentrations > 1 ppm	Temporarily cease work until concentration subsides and evacuate immediate area or B2	
Drill Rig/ Equipment Decontamination	D1 plus Goggles or Faceshield, Gloves Rain suit	NA	NA	NA	

Notes:
(1) The requirements presented are the minimum requirments that must be included in the RAC HASP. The RAC HSO shall determine if additional monitoring requirements are needed.
(2) **The Health and Safety Officer must be advised of conditions that warrant a change in PPE and approve the revised procedure.**

Condition Dependent: Personnel are to use prudent judgement and select additional PPE based on current Site conditions (e.g., wet or muddy) to prevent unnecessary contamination.

Site personnel are permitted, with HSO approval , to substitute protective aprons and/or gauntlets when exposure to water/sediment samples is readily controlled. This substitution is permitted to reduce the possibility of heat stress caused by working in full coverall protection.

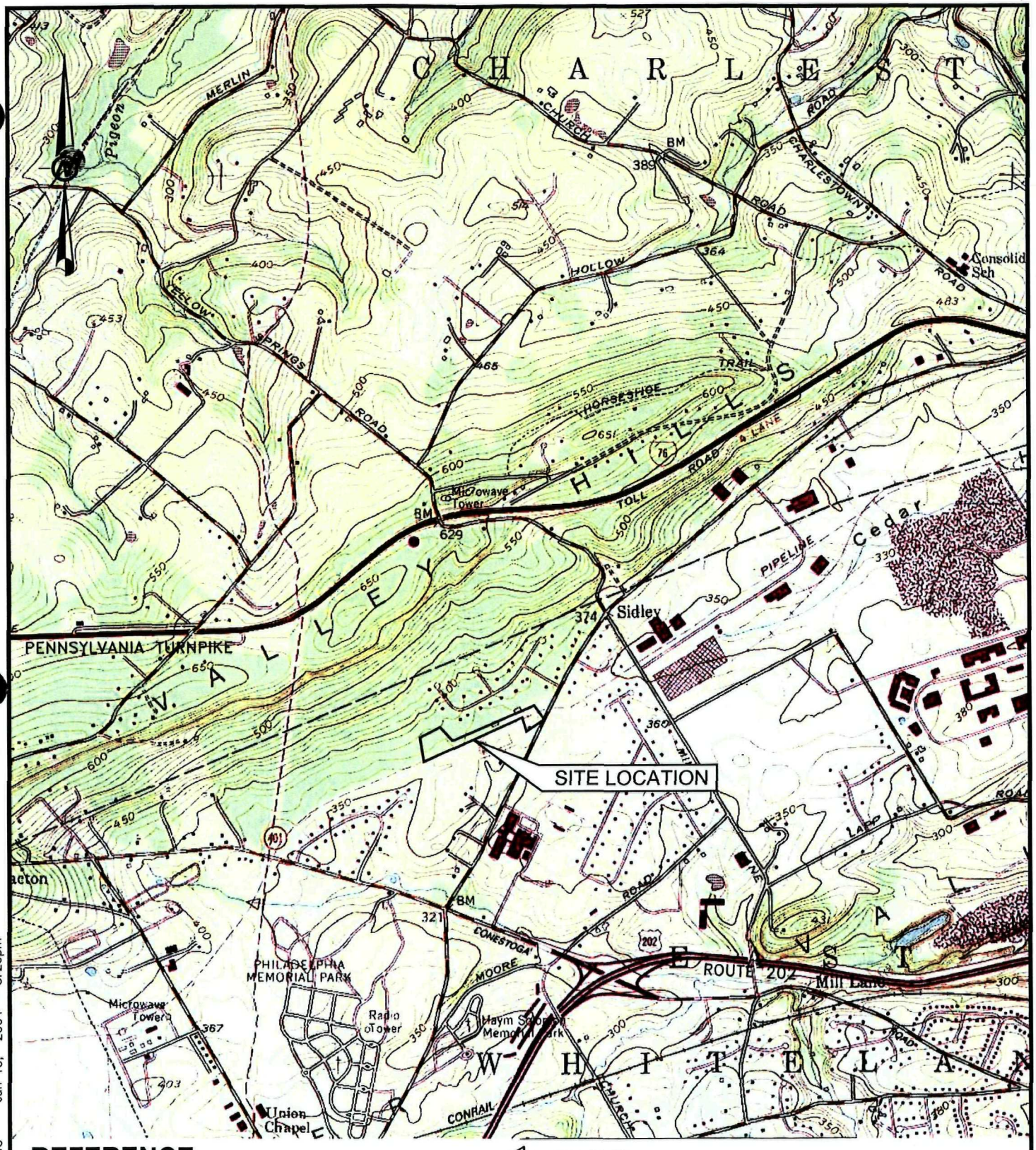

REFERENCE

1.) BASE MAP TAKEN FROM U.S.G.S. 15 MINUTE QUADRANGLE OF MALVERN, P.A..

QUADRANGLE LOCATION

2000 0 2000

SCALE FEET

Golder Associates
Philadelphia USA

FILE No.	0036000-Appendix E-1-1
PROJECT No.	003-6000
REV.	0

SCALE	AS SHOWN
DATE	06/16/04
DESIGN	AM
CADD	AM
CHECK	DSL
REVIEW	BJE

TITLE

SITE LOCATION MAP

MALVERN TCE SUPERFUND SITE

FIGURE E1-1

Drawing file: 0036000 Appendix E1-1.DWG Jun 16, 2004 - 3:26pm

LEGEND

GW-3	MONITORING WELL (INSTALLED DURING PRE-DESIGN INVESTIGATION)
CC-14	MONITORING WELL (INSTALLED PRIOR TO PRE-DESIGN INVESTIGATION)
	MONITORING WELL (RETROFITTED EXISTING HOME WATER SUPPLY WELL)
	SITE BOUNDARY
X	CHAIN LINK SECURITY FENCE
	OUTLINE OF GAS PIPELINE RIGHT-OF-WAY AS SHOWN IN REMEDIAL INVESTIGATION
	APPROXIMATE NORTHERN EXTENT OF GAS PIPELINE RIGHT-OF-WAY OBSERVED DURING PRE-DESIGN INVESTIGATION

REFERENCE

1.) TOPOGRAPHIC FEATURES TAKEN FROM CADD FILE "MALVERN.DWG" DATED 05/24/96, SUPPLIED TO de maximus, Inc. BY USEPA IN MARCH 2000, EXCEPT AS NOTED BELOW.

2.) TOPOGRAPHIC FEATURES INSIDE THE LIMIT OF PRE-DESIGN INVESTIGATION SURVEY AREA TAKEN FROM CADD FILE "S0101(2000)" DATED 10/31/01 SUPPLIED BY PENNONI ASSOCIATES, MODIFIED BY GOLDER ASSOCIATES ON 04/10/02.

3.) LOCATION OF ASTON ROAD AND JAMES THOMAS ROAD ESTIMATED BY GOLDER ASSOCIATES FROM AERIAL PHOTOS.

120 0 120 240
SCALE FEET

REV	DATE	DES	REVISION DESCRIPTION	CADD	CHK	RVW

PROJECT
CHEMCLENE SITE DEFENSE GROUP
MALVERN TCE SUPERFUND SITE
EAST WHITELAND TOWNSHIP, PENNSYLVANIA

TITLE
SITE LAYOUT

Golder Associates
Philadelphia USA

PROJECT No.		003-6000	FILE N0036000/AppendixE/1/2
DESIGN	DSL	01/14/03	SCALE AS SHOWN REV. 0
CADD	AM	06/16/04	
CHECK	DSL	06/16/04	**FIGURE E1-2**
REVIEW	BJE	06/16/04	

Figure E1-3
Directions to Paoli Memorial Hospital
255 W. Lancaster Avenue, Paoli, PA 19301-1792
(610) 648-1000

- When leaving the site, make a right onto Phoenixville Pike
- Drive southwest and make left onto Conestoga Road
- Drive about 0.5 miles and merge onto US 202 Northbound
- Drive for about 1.5 miles and take the PA-29 South exit towards Malvern
- Immediately off the exit, turn right onto South Morehall Road
- Drive about 0.5 miles and turn left onto Lancaster Pike
- Lancaster Pike becomes West Lancaster Ave after about 0.5 miles

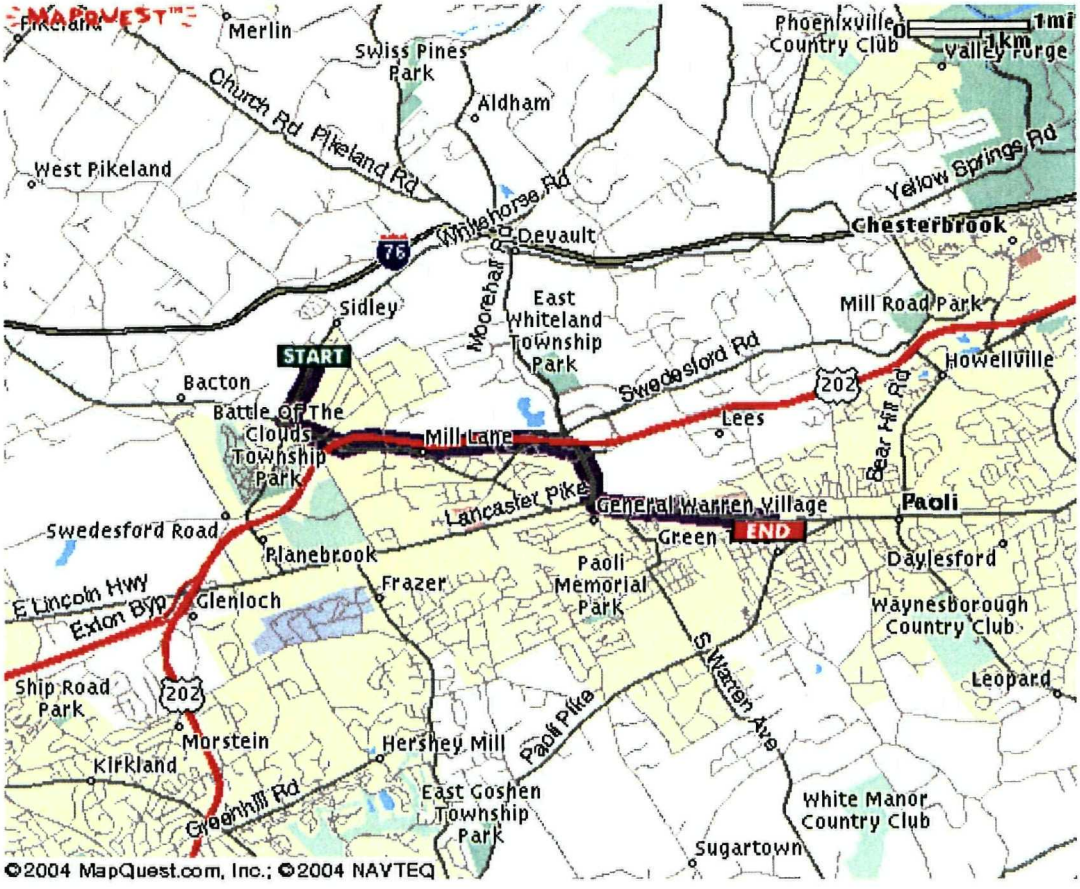

ATTACHMENT E1-1

FIELD PROCEDURES CHANGE AUTHORIZATION

Instruction Number: _____ Date:_____

Duration of Authorization Requested ___ Today only

___ Duration of Task

Description of Procedures Modification:

Justification:

Person Requesting Change: Verbal Authorization Received From:

_____	_____	_____
Name	Name	Time
_____	_____	
Title	Title	
_____	_____	
Signature	Approved By	

(Signature of person named above to be obtained within 48 hours of verbal authorization)

ATTACHMENT E1-2

SITE HEALTH AND SAFETY PLAN ACKNOWLEDGEMENT FOR GOLDER ASSOCIATES INC. EMPLOYEES

I have read understand and agree to follow the provisions detailed in the Golder Associates and RAC's Health and Safety Plan for the Malvern TCE Superfund Site.

I am aware of emergency procedures, equipment locations, and emergency telephone numbers.

I understand that my failure to comply with these provisions may lead to disciplinary actions and/or my dismissal from the Site.

Printed Name	**Signature**	**Date**

This form is to be kept on file on Site. Copies should be made available to personnel from all companies involved with Site work.

ATTACHMENT E1-3

REPORT FORM FOR UNSAFE CONDITIONS AND PRACTICES

DESCRIPTION OF UNSAFE CONDITION OR PRACTICE _____

_____

_____

_____

_____

DESCRIPTION OF CIRCUMSTANCES SURROUNDING UNSAFE CONDITION OR PRACTICE _____

_____

_____

_____

_____

IS THIS AN EXISTING CONDITION OR POTENTIAL HAZARD? _____

REPORTED TO _____

REPORTED BY _____ **DATE** _____

COMMENTS _____

_____

_____

_____

_____

REPORT RECEIVED BY _____**(Health and Safety Officer)**

DATE _____ _____

(Signed)

ATTACHMENT E1-4

INCIDENT REPORT FORM

In the event of any injury, accident or illness requiring medical attention beyond minor first aid, please complete this form. Retain two copies for your files and send the original to Karen Dierst in the Seattle office.

Employee's office mailing address: Location of office (if different):

_____ _____

_____ _____

_____ _____

_____ _____

EMPLOYEE INFORMATION:

Employee's name:_____

Length of time with Employer:_____

S.S.#:_____-_____-_____ Sex: M F Birth Date:_____

Home address:

_____

_____

_____

Occupation:_____

Department or group:_____

PROJECT INFORMATION:

Project Manager: _____

Field Supervisor: _____

Project Description (briefly describe the project, location, employee's role, etc.):

_____

_____

_____

_____

_____

ACCIDENT/EXPOSURE INFORMATION:

Description of accident/incident (briefly describe how the accident/incident occurred, what task the employee was working on at the time, working conditions, etc.)

_____

_____

_____

_____

_____

INJURY/ILLNESS INFORMATION:

Description of injury/illness (please describe the nature of the injury/illness, body part(s) affected, and the object/agent which caused the injury/illness):

_____

_____

_____

_____

_____

Name and address of attending physician:

_____

_____

_____

_____

Name and address of hospital (if admitted):

_____

_____

_____

_____

Report prepared by:_____

Title:_____

Date:_____

APPENDIX E2

CONSTRUCTION QUALITY ASSURANCE PLAN

Golder Associates Inc.

1951 Old Cuthbert Road, Suite 301
Cherry Hill, NJ 08034
Telephone (856) 616-8166
Fax (856) 616-1874
www.golder.com

CONSTRUCTION QUALITY ASSURANCE PLAN
SITE REMEDIATION AND CLOSURE
MALVERN TCE SUPERFUND SITE
EAST WHITELAND TOWNSHIP, PENNSYLVANIA

Prepared for:

Chemclene Site Defense Group

Prepared by:

Golder Associates Inc.
1951 Old Cuthbert Road, Suite 301
Cherry Hill, New Jersey 08034

September 2004

Project No.: 003-6000

TABLE OF CONTENTS

SECTION			PAGE
1.0	INTRODUCTION		E2-1
	1.1	Purpose and Scope	E2-1
	1.2	Construction Quality Assurance Program	E2-2
2.0	PROJECT TEAM ORGANIZATION AND RESPONSIBILITIES		E2-4
	2.1	Project Coordinator / Owner's Representative	E2-4
	2.2	Engineer	E2-5
	2.3	Quality Assurance (QA) Team	E2-5
	2.4	Remedial Action Contractor	E2-7
3.0	CONSTRUCTION ACTIVITIES		E2-9
	3.1	Earthwork	E2-9
	3.2	Geosynthetics	E2-9
	3.3	Piping	E2-9
	3.4	Drilling	E2-10
	3.5	Mechanical/Electrical Controls	E2-10
	3.6	Miscellaneous	E2-10
4.0	QUALITY ASSURANCE DOCUMENTATION		E2-11
	4.1	Earthwork	E2-11
		4.1.1 Pre-Construction Testing	E2-11
		4.1.2 Construction Testing	E2-12
		4.1.3 Construction Monitoring	E2-12
	4.2	Geosynthetics Construction Quality Assurance	E2-13
		4.2.1 Conformance Testing / Review Quality Control Submittals	E2-13
		4.2.2 Construction Monitoring and Testing	E2-14
		4.2.3 Geomembrane Monitoring and Testing	E2-15
		4.2.4 Geotextile and Geocomposite Monitoring	E2-17
	4.3	SVE Wells and Monitoring Well Installation	E2-18
	4.4	Mechanical/Electrical	E2-19
5.0	RECORDS AND REPORTING		E2-21
	5.1	Contract Drawings	E2-21
	5.2	Contract Submittals	E2-21
	5.3	Daily Records	E2-21
	5.4	Construction Problem and Corrective Measure Reports	E2-22
	5.5	Photographic Records	E2-22
	5.6	Certification of Completion of Remedial Action	E2-23
	5.7	Records Storage	E2-24
	5.8	Meetings	E2-24
6.0	PLAN MODIFICATION PROCEDURE		E2-26

1.0 INTRODUCTION

1.1 Purpose and Scope

This Construction Quality Assurance Plan (CQAP) has been prepared by Golder Associates Inc. (Golder Associates) on behalf of the Chemclene Site Defense Group (CSDG) pursuant to the requirements set forth in the Consent Decree (USEPA, 1999) for the site remediation at the Malvern TCE Superfund Site (Site) in East Whiteland Township, Pennsylvania. The purpose of this CQAP is to describe the quality assurance program for the construction of the remedy to verify and document that construction is completed in accordance with the intent of the Contract Drawings and Technical Specifications. CSDG will retain a qualified Remedial Action Contractor (RAC) who will have overall responsibility for the quality of the constructed work. As required by Section VI of the Consent Decree, the CSDG will identify a Resident Engineer (Engineer) and a Quality Assurance (QA) Official who will monitor conformance of the RAC with the Contract Drawings and Technical Specifications and ensure that the Work is performed in accordance with the final approved Design Report. The Consent Decree also states that the Engineer can also serve as the QA Official.

This CQAP describes the following elements:

- Responsibilities and authorities of all organizations and key personnel involved in the design and construction of the Remedial Action;
- Protocols for sampling and testing used to monitor construction;
- Identification of proposed construction quality assurance (CQA) sampling activities including the sample size, locations, testing frequencies, acceptance and rejection data sheets, problem identification and corrective measures reports, evaluation reports, acceptance reports, and final documentation. In addition, a description of the provisions for final storage of all records consistent with the requirements of the Consent Decree is provided; and
- Reporting requirements for CQA activities including daily summary reports, inspection data sheets, problem identification and corrective measures reports, design acceptance reports, and final documentation. In addition, provisions for final storage of all records are specified consistent with the requirements of the Consent Decree.

Details of materials, construction techniques, and procedures are included in the Technical Specifications which are referenced by this CQAP.

This CQAP addresses quality assurance (QA), not quality control (QC). In general, construction quality assurance refers to measures taken to assess if the installer or contractor is in compliance with the plans and specifications for a project. Construction Quality Control refers to measures taken by the installer or contractor to determine compliance with the requirements for materials and workmanship as stated in the plans and specifications for the project. This plan is independent of QC programs conducted by manufacturers, RAC, and RAC Subcontractors.

1.2 Construction Quality Assurance Program

The CQA Program is a planned system of activities that provides assurance that a project is constructed in accordance with the intent of the Contract Documents. It includes inspections, verifications, audits, and evaluations of materials and workmanship necessary to determine and document the quality of the constructed work.

The basic components of the CQA program are:

- Preparation of a CQA Plan;
- Pre-construction review of project components;
- Field monitoring control of grades;
- Field monitoring of soil components during placement and compaction;
- Field monitoring of construction of the SVE wells and monitoring wells, electrical and mechanical components of the SVE system.
- Final walk over and favorable review of the completed work;
- Preparation of Daily Reports;
- Review of technical and laboratory data;
- Compilation and presentation of applicable data, logs, RAC as-built documents, photographs, and comments into a Final Record Documentation Report, which certifies that the construction was completed in general accordance with the intent of the Contract Drawings and Technical Specifications.

These CQAP guidelines provide for qualified personnel to monitor the progress and quality of construction. This program is intended to provide an objective overview of construction progress and identify potential deficiencies or problem areas during construction.

The CQAP identifies the personnel involved in CQA, and describes roles and responsibilities of the associated parties, QA reporting, and record storage requirements. The Consent Decree, Section XV, requires the submission of a Certification of Completion of Remedial Action stamped by a Professional Engineer, including as-built drawings.

2.0 PROJECT TEAM ORGANIZATION AND RESPONSIBILITIES

This section describes the organization and individual responsibilities during the Remedial Action. The project organization is presented as follows:

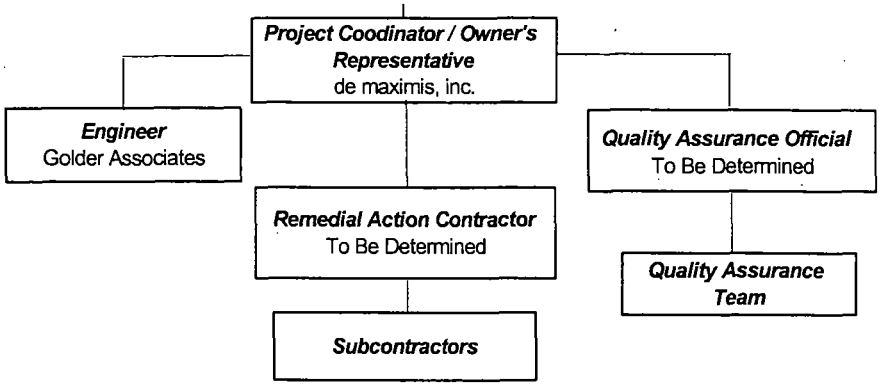

Project Organization Chart

2.1 Project Coordinator / Owner's Representative

The CSDG Project Coordinator who is responsible for the overall coordination and management of activities required under the Consent Decree, *de maximis*, will also serve as the Owner's Representative during construction. The Owner's Representative will administer the contract on behalf of the CSDG and will serve as the liaison during construction, communicating and coordinating with the Remedial Action Contractor, the Engineer, the USEPA, PADEP, the CSDG, the public / community, and the QA Official. General responsibilities of the Owner's Representative will include:

- Monitor and coordinate the Remedial Action Contractor's work in relation to the schedule and conformance to the Contract Documents;
- Review the schedule of values and RAC payment applications;
- Work with the Remedial Action Contractor to document that the required QC testing has been performed in accordance with the Contract Documents and report data to the Engineer and QA Official;
- Coordinate shop drawings and other material submittals from the Remedial Action Contractor and submit to the Engineer for review. Coordinate with the Remedial Action Contractor to incorporate the Engineer's comments;

- Schedule and coordinate quality assurance monitoring activities with the QA Official; and,
- Coordinate any design clarifications, interpretations, or changes with the Engineer and Remedial Action Contractor.

2.2 Engineer

Golder Associates is the Engineer responsible for preparing the Final Design Report. The responsibilities of the Engineer during Remedial Action include the following:

- Review and approve all design and specification changes;
- Review and approve all design components completed by the Contractor or others;
- Provide clarifications to the Contract Documents;
- Review submittals required by the Contract Documents including quality control tests;
- Participate in the pre-construction, substantial completion, and weekly progress meetings to review construction activities and conformance with the intent of the Remedial Design;
- Review, in conjunction with CSDG, corrective measures to be implemented during construction when deviations from the CQAP and Remedial Design occur;
- Review shop drawings and other material submittals from the RAC and report whether the materials are in substantial compliance with the Contract Documents; and,
- Maintain an on-site project record drawing and project file for storing of originals or copies of reports generated during construction.

Design and specification changes will be transmitted through the Owner's Representative to the Engineer for review and approval. Materials and construction changes proposed during construction will be evaluated for compliance with the intent of the Contract Documents.

2.3 Quality Assurance (QA) Team

The QA Team will be responsible for overseeing and implementing the CQA program as necessary to verify performance of appropriate tasks. The QA Team will perform the CQA tasks required by this CQAP and document that the project construction has been completed in general conformance with the Contract Documents. The QA Team is responsible for reviewing each stage of construction activities and will have authority to reject materials and workmanship provided by the Remedial

Action Contractor that are not in compliance with the Contract Documents. The QA Officer will work with the Owner's Representative and Engineer and will be responsible for assuring the CQAP is implemented. Responsibilities of the QA Team include the following:

- Review of the Contract Documents, and related work plans to verify compliance with CQAP requirements;
- Work with the Owner's Representative to review construction activities with the Remedial Action Contractor;
- Coordinate and schedule CQA testing with construction activities;
- Observe the construction quality control (CQC) operations performed by the Remedial Action Contractor and Remedial Action Contractor subcontractors;
- Review, in conjunction with the Owner's Representative, corrective measures to be implemented during construction when deviations from the CQAP occur;
- Monitor CQA activities to help ensure that testing and documentation are complete, accurate and in general accordance with the Contract Documents;
- Evaluate the soils, geosynthetics, and other testing laboratories for the project;
- Monitor and document excavation and fill placement and compaction;
- Monitor and document the excavation of PCB impacted area;
- Monitor and document geosynthetic material placement, non-destructive and destructive seam testing, and seaming and repair operations, as necessary;
- Work with the Owner's Representative to determine that testing equipment used and tests performed are in accordance with the Contract Documents and industry standards;
- Observe, document, and report on tests;
- Report all identified deficiencies to the Owner's Representative;
- Report all activities to correct identified deficiencies;
- Prepare quality assurance reports;
- Maintain an on-site project file for storing the originals or copies of all CQA data sheets and reports generated during construction;
- Submit weekly quality assurance reports to the Owner's Representative, include a summary of all deficiencies and corrective measures;
- Verify as-built surveying by the Remedial Action Contractor in accordance with the Contract Documents;

- Provide necessary documentation for Engineer for preparation of the Construction Completion Report at the conclusion of the project;
- Confirm that test data is accurately recorded and maintained, and verify that field data is properly recorded;
- Audit the RAC and Manufacturer QC plans for general compliance with the CQAP;
- Obtain pre-construction and construction soil samples for laboratory testing;
- Monitor and document geosynthetic material delivery, storage, placement, non-destructive and destructive seam testing, and seaming and repair operations;
- Obtain and ship destructive seam test samples to approved testing facilities;
- Work with the RAC to determine that testing equipment used and tests performed are in accordance with the Technical Specifications and industry standards;
- Observe, document, and report on tests;
- Report any identified deficiencies not satisfactorily corrected to the Owner's Representative; and,
- Report any proposed substantive changes to the Owner's Representative.

2.4 Remedial Action Contractor

The Remedial Action Constructor (RAC) will be identified by CSDG following bid solicitation and finalization of the remedial design. The name, title, and qualifications of the proposed RAC and key personnel will be submitted to the USEPA prior to mobilization of the RAC. The selected RAC will be qualified to undertake the types of construction activities to be implemented.

The RAC will assign a Project Manager as the responsible person in charge of all aspects of the project. The Project Manager will have a background in engineering or construction management with significant experience in construction and contract administration. The RAC Project Manager will prepare an agenda for, preside at, and record project meeting minutes, including pre-construction and weekly progress meetings, substantial completion, or other meetings as necessary. The RAC Project Manager will prepare periodic construction progress reports for distribution to the project team.

The RAC will engage a Geosynthetics Installer with extensive experience in installation, seaming, and field testing of the specified geomembrane and other geosynthetics components, if applicable.

The Geosynthetics Installer, if applicable will provide a field supervisor who will report directly to the RAC Project Manager.

The RAC will hire a PA licensed surveyor for performing the surveying tasks required by Contract Documents. All surveying will be performed under the direction of a surveyor licensed in the Commonwealth of Pennsylvania.

Upon completion of the project, the RAC will provide record drawings to the Owner's Representative.

3.0 CONSTRUCTION ACTIVITIES

The following is a brief discussion of the RAC's major remedial construction activities to be monitored by the QA Team.

3.1 Earthwork

Earthwork includes:

- Waste and soil excavation for installation of the SVE wells, well pipe laterals, and for trenching, regrading, and relocation;
- Excavation, including stockpiling and testing of the PCB impacted soils;
- Trenching and regrading of disrupted areas, and relocation of excess waste and soil;
- Fill placement and compaction;
- Proof-rolling of the subgrade prior to geosynthetics installation;
- Placement of protective cover and vegetative cover over the geosynthetics; and,
- Placement of trench backfill materials.

3.2 Geosynthetics

Geosynthetics installation includes:

- Installation and seaming of the smooth and HDPE geomembranes;
- Installation of "boot" seals around geomembrane penetrations;
- Installation and seaming of geotextiles; and,
- Installation of the geocomposite drainage layer.

3.3 Piping

Piping installation includes:

- Placement and joining of high density polyethylene (HDPE) pipe;
- Placement of SVE well system pipe networks; and,
- Placement and joining of condensate collection pipes and sumps.

3.4 Drilling

Drilling activities include construction of:

- SVE wells; and,
- Groundwater monitoring wells.

3.5 Mechanical/Electrical Controls

Mechanical/electrical controls include:

- Installation of the SVE equipment, controls, and piping;
- Installation of the condensate sump pump, piping, and control wiring;
- Installation of the SVE blower skid and interconnecting piping, electrical, and control wiring;
- Installation of the air compressor, air dryer, and interconnecting piping and electrical wiring; and,
- Installation of the condensate tank and transfer pumps, controls, and interconnecting and control wiring.

3.6 Miscellaneous

- Dismantling and removal of accumulated debris from the MPA;
- Establishment of permanent vegetation on the completed landfill cap and other areas disturbed by construction activities; and,
- Installation of SVE blower/treatment building foundation, structure, lighting, heating and ventilation and monitoring equipment.

4.0 QUALITY ASSURANCE DOCUMENTATION

The following sections present minimum requirements of the CQA monitoring and testing documentation program to be performed by or under the oversight of the QA Official in conjunction with the RAC. This monitoring and testing program is intended to supplement the Technical Specifications.

4.1 Earthwork

The earthwork quality assurance testing documentation program consists of pre-construction and construction testing of native and imported soil such as vegetative cover, cover soil, gravel, road material and riprap. The characteristics of these soil types are defined in the Technical Specifications. Prior to and during construction, each soil type will be evaluated to determine if it meets requirements. Soil samples will be obtained in accordance with American Society for Testing and Materials (ASTM) standards ASTM D75 and ASTM D420, and will be tested by a geotechnical testing laboratory approved by the QA Official.

4.1.1 Pre-Construction Testing

Prior to initiation of construction, pre-construction testing will be performed on the imported materials to determine whether they meet requirements listed in the Technical Specifications. Soil samples will be provided from each proposed source. The specific tests to be performed, including testing frequency, for each material type are presented in Table E2-1.

TABLE E2-1
PRE-CONSTRUCTION TESTING MINIMUM FREQUENCIES[1]

Test and Method	Fill[5] (cy)	Vegetative Layer (cy)	Riprap (cy)	Dense Graded Aggregate (cy)	AASHTO No. 57 (cy)
Particle Size[2] (ASTM D422, D5519, C136)	5,000	5,000	5,000	5,000	5,000
Atterberg Limits (ASTM D4318)	5,000	---	---	---	---
Moisture Content[3] (ASTM D2216 or D4643)	5,000	---	---	--	---
Standard Proctor (ASTM D698)	5,000	---	---	---	---
pH (ASTM D4972)	---	5,000	---	---	---

Organic Content (ASTM D2974)	---	5,000	---	---	---
Specific Gravity (ASTM D854)	5,000	---	---	--	--
Carbonate Content (ASTM D3042)	---	---	---	---	---

[1] Specific frequency refers to one test per the presented volume or one per material type, or source whichever is greater.
[2] ASTM D422 is applicable for fill, protective cover, and vegetative cover. ASTM C117 and C136 are applicable to all other soil construction materials. Use the USCS for description and identification (ASTM D2488).
[3] Natural moisture content.
[4] Carbonate Content for cover material only.
[5] Frequency required for each type of fill (i.e., structural, low permeability and clean backfill).

4.1.2 Construction Testing

The tests to be performed for each material type, including testing frequency, are presented in Table E2-2. The testing frequencies specified in Table 4-2 are minimum and will be increased by the QA Official if construction conditions warrant.

TABLE E2-2
CONSTRUCTION TESTING - MINIMUM FREQUENCIES[1]

Test and Method	Vegetative Layer/ Cover Soil	Fill	AASHTO No. 57 Dense Graded Aggregate Riprap	Structural Backfill
In-Place Density (ASTM D2922)	----	2/acre/lift	---	1/100 linear feet of trench/lift
Water Content (ASTM D3017)	----	2/acre/lift	---	1/100 linear feet of trench/lift
Thickness	4/acre	2/acre/lift	2/500 sf	1/100 linear feet of trench/lift

[1] Specific frequency refers to one test per the presented frequency or one per material type, whichever is greater.

4.1.3 Construction Monitoring

All earthwork will be monitored to verify that the construction is in general accordance with the Contract Documents. The QA Team will identify inadequate construction methodologies or materials which may adversely impact the performance of the remedy or existing structures. Visual observations or CQA surveying, as appropriate throughout the construction process, will be conducted to evaluate whether the materials are placed to the lines and grades as shown on the Contract Drawings.

4.2 Geosynthetics Construction Quality Assurance

The CQA program for geosynthetics consists of reviewing the Geosynthetics Installer's QC submittals, material conformance testing, construction monitoring, and testing. The types of geosynthetics used in the construction of the remedy include HDPE geomembrane, non-woven and woven geotextile, and geocomposite. The geosynthetic QC submittals and material conformance testing requirements are defined in the Technical Specifications. Prior to and during construction, these geosynthetics will be sampled and tested to determine if the materials meet the requirements as listed in the Technical Specifications. Testing will be performed by a Geosynthetics Accreditation Institute accredited Geosynthetics Laboratory, as approved by the QA Official.

4.2.1 Conformance Testing / Review Quality Control Submittals

Prior to geosynthetics installation, samples of the geosynthetics will be obtained for conformance testing. The conformance testing minimum frequency will be at a rate of 1 per 100,000 square feet of delivered material, or one sample per lot, whichever results in the greater number of conformance samples. Samples will be taken across the entire width of the roll and will not include the first 3 feet. The samples will be about 3 feet long by the roll width. The QA Team will mark the machine direction, roll number, and date the sample was obtained on the sample and forward the sample to the approved geosynthetics laboratory. The minimum required geosynthetic conformance tests are presented in Tables E2-3 and E2-4.

TABLE E2-3
GEOMEMBRANE CONFORMANCE TESTING

Test	Test Method	Frequency (sf)
Density	(ASTM D1505)	1/100,000
Carbon Black Content	(ASTM D1603)	1/100,000
Thickness (Smooth)	(ASTM D5199)	1/100,000
Thickness (Textured)	(GRI GM-8)	1/100,000
Tensile Properties	(ASTM D638)	1/100,000
Puncture Resistance	(FTMS 101C, Method 2065)	1/100,000
Carbon Black Dispersion	(ASTM D3015)	1/100,000
Low Temperature Brittleness	(ASTM D746)	1/100,000
Tear Resistance	(ASTM D1004)	1/100,000

TABLE E2-4
GEOCOMPOSITE CONFORMANCE TESTING

Test	Test Method	Frequency (sf)[1]
Mass per unit area	(ASTM D3776)	1/100,000
Peel Adhesion	(ASTM F904 modified)	1/100,000
Transmissivity (Geocomposite)	(ASTM D4716)	1/100,000
Permittivity (Upper Geotextile)	(ASTM D4491)	1/100,000

[1] Specified frequency or one per lot, whichever is greater.

All conformance tests will be performed in accordance with the Technical Specifications. The QA Official will review the test results and will report any nonconformance to the Engineer and Owner's Representative, who will notify the RAC.

4.2.2 Construction Monitoring and Testing

All geosynthetic components will be tested. The QA Team will work to identify inadequate RAC construction methodologies or materials. Visual observations or surveying throughout the construction process will be made to evaluate whether materials are placed to the lines and grades as shown on the Contract Drawings.

The QA Official will review the following RAC's Geosynthetics Installer documentation:

- QC documentation recorded during installation;
- Daily reports detailing arrival and departure times, the personnel present on-site, the progress of the work, the arrival of materials, and any problems encountered; and
- Subgrade surface acceptance certificates for each area to be covered by the geosynthetics, signed by the Geosynthetics Installer's Superintendent and the RAC.

The QA Team will observe and document the following items related to geosynthetics installation:

- Delivery and unloading of geosynthetic materials to the Site to verify that the materials are in good condition and properly labeled;
- Geosynthetic packaging identification slips for verification and generation of an on-Site materials inventory;

- Subgrade conditions prior to geosynthetics installation. Verify that any identified deficiencies (e.g. surface irregularities, loose soil, protrusions, in-place construction stakes, excessively soft areas, stones, desiccation cracks) are corrected;
- Lines and grades have been verified by the RAC's surveyor;
- Handling of geosynthetic materials from storage to the work area;
- Temporary and permanent anchoring of geosynthetics; and,
- Required overlap distances are maintained.

4.2.3 Geomembrane Monitoring and Testing

During installation, the QA Official or QA Team will observe and document the RAC's geomembrane deployment, trial seams, field seams, non-destructive and destructive seam testing, and repairs to document that the installation is in general accordance with the Technical Specifications.

Deployment - The QA Official will verify that only favorably reviewed materials are used, that each panel is given a unique panel number, geomembrane is not placed during inclement or other unsuitable weather conditions, the geomembrane is not damaged during installation, and anchoring is performed in accordance with the Technical Specifications and Contract Drawings. The QA Official will record the deployment on the geosynthetic data sheets.

Trial Seams - The QA Official will verify that seaming conditions are adequate, tests are performed at required intervals, specified test procedures are followed, and that retests are performed in accordance with the Technical Specifications. The Geosynthetics Installer will perform pre-weld testing (trial seaming) at the beginning of each crew shift and immediately following any work stoppage of 30 minutes or more. Seaming operations will not commence until the QA Official has determined that the seaming process is meeting the specification requirements and is acceptable. Testing will include visual observation of a trial seam, a minimum of 5 feet long on the geomembrane material. The QA Official will mark the test weld with date, ambient temperature, welding machine number, welding technician initials, machine temperature, and speed. For extrusion welding, the QA Official will record the nozzle and extrusion settings. The trial seam sample will be archived by the QA Official at the Site. The QA Official will record the trial seam test results on the geosynthetics data sheets.

Field Seaming - The QA Official will verify that only favorably reviewed equipment and personnel perform welding, all welding is performed under suitable conditions as specified in the specifications, specified overlaps are achieved, seams are oriented in accordance with project requirements, and that grinding techniques and extrudate meet project requirements for extrusion welding. The QA Official will record pertinent information on geosynthetic data sheets.

Non-Destructive Seam Continuity Testing - The QA Official will verify that all seam lengths are non-destructively tested by the RAC in accordance with the Technical Specifications. If the seam cannot be tested, the QA Official will observe cap strip operations and verify that test equipment and gauges are functioning properly and that test procedures are in accordance with the project requirements. The QA Official will verify that all failing seam lengths are repaired and re-tested until passing results are achieved. The QA Official will record all non-destructive test locations on geosynthetic data sheets.

Destructive Seam Testing - The RAC's Geosynthetic Installer will furnish destructive testing samples of the field seamed geomembrane in accordance with the Technical Specifications, at locations selected by the QA Official. The samples will be taken and prioritized as follows:

- all areas identified as suspect during seaming or non-destructive testing/monitoring;
- a minimum of one sample for each geomembrane seamer;
- a minimum of one sample for each representative working condition (e.g., different weather conditions); and
- a minimum of one sample for every 500 feet of seaming.

Each destructive sample will, at a minimum, measure 12 inches by 48 inches in length with the seam centered lengthwise. Two (2) specimens, one from each end of the sample, will be cut and tested for peel and shear strength in the field by the RAC using a calibrated field tensiometer capable of quantitatively measuring peel and shear strengths, in accordance with the Technical Specifications. The QA Official will record the test results on the geosynthetic data sheets.

If the specimen fails, the RAC's Geosynthetic Installer will provide additional test samples 10 feet from the point of the failed test in each direction for repeat of the field test procedure. If these additional tests fail, then the procedure will be repeated until the length of the failed seam is established. Once the field tests have passed, the remainder of the sample shall be divided into three equal sections and distributed as follows:

- one sample to the RAC's Geosynthetic Installer Laboratory for testing;
- one sample to CSDG's Geosynthetics Laboratory for testing; and
- one sample for Site Archives.

Each sample shall be subject to the following tests:

- Seam shear strength (five specimens) - ASTM D3083;
- Seam peel strength (five specimens) - ASTM D413; and
- Thickness - ASTM D1593.

A minimum of four of the five samples must meet the minimum field seam properties listed in the Technical Specifications. Both tracks of a double-track fusion weld will be destructively tested.

Failing laboratory tests will be subject to additional testing until a passing sample is found. The RAC's Geosynthetic Installer will take another destructive sample 10 feet

from the point of the failed test in each direction and the field test procedure will be repeated. If subsequent tests fail, then the procedure is repeated until the length of the failed seam is established. Once the field tests have passed, a second sample will be taken between the passing specimens and tested by the CQA Geosynthetic Laboratory. Failed seams will be tracked according to the welding apparatus and the machine operator. Samples taken as the results of failed tests will not be counted toward the total number of destructive tests required. All failed field seams must be documented to be bounded on both sides by passing destructive tests. Laboratory destructive testing results will govern the acceptability of seams; if either laboratory reports a failed result, then the sample will be considered as failing.

The RAC and Geosynthetics Installer shall be responsible for patching all areas cut for test samples and for non-destructive testing (e.g. vacuum box, etc.) in accordance with the Technical Specifications. The QA Official will record all test locations, results, actions taken in conjunction with destructive test failures, and repairs.

Repairs - The QA Official will observe and document that all materials, techniques, and procedures used for repairs are favorably reviewed in advance. The QA Official will verify that all repairs are marked, recorded, repaired, tested, and that wrinkles are addressed, prior to being covered by other materials. The QA Official will record defects and repairs on the geosynthetic data sheets.

4.2.4 Geotextile and Geocomposite Monitoring

During geotextile and geocomposite installation, the QA Official or QA Team will observe and document on geosynthetic data sheets the RAC's deployment, field seaming, and repairs to help evaluate whether the RAC's installation is in accordance with the Technical Specifications.

Deployment - The RAC will verify that the underlying layers are clean and free of deleterious materials prior to deployment, anchoring is achieved as specified, methods are used to minimize wrinkles, and underlying layers are protected during cutting of materials.

Seams - The RAC will verify sufficient seam overlap and that the specified seam procedures are followed as required in the Technical Specifications. The RAC will verify that horizontal seams are positioned at least 5 feet from all slopes steeper than 10 percent unless favorably reviewed by the QA Official.

Repairs - The RAC will verify, as observed by the QA Official, that all repairs are performed in accordance with project specifications.

Protection - The RAC will place materials in a manner to prevent damage to the geosynthetics and underlying materials. The RAC will conduct his operations so that a minimum thickness of soil separates the geosynthetics from the tracks or wheels of construction equipment (depending on contact pressures), minimal slippage of the geosynthetics occurs on the underlying materials and that no excess tensile stresses occur in the geosynthetics.

4.3 SVE Wells and Monitoring Well Installation

The following describes the CQA procedures to be implemented during the RAC's installation of the SVE system and monitoring well installation. The SVE well network consists of 50 SVE wells, control valve vaults, and a blower system. On groundwater monitoring is to be installed, and one existing groundwater monitoring well is to be decommissioned. The location of the SVE wells and the monitoring wells presented on the Contract Drawings may be relocated if difficulty in drilling is encountered and if authorized by the Engineer. Additional SVE wells may be installed based on analytical data and if authorized by the Engineer.

The QA program for drilling will consist of full-time monitoring of the drilling operations. The QA Team will observe the following activities during the RAC's installation of the SVE wells and the monitoring wells:

- Start and completion date;
- SVE well or monitoring well location;
- Type of drilling rig and equipment (hollow stem auger, bucket auger, etc.);
- RAC measurement of airborne chemical concentrations in the working area;
- Logging of material types encountered during drilling;
- Measurement of the total drilling depth;
- Measurement to encountered liquids, as applicable;
- Measurement to bottom of the well;
- Monitoring of depth to lateral pipe connections (SVE wells);
- Measurement of the perforated and solid sections of piping and well screens;
- Measurement of thickness of all components of the SVE wells (rounded gravel, filter sand, bentonite slurry plug);
- Measurement of the installed dimensions of pipe above and below grade; and,
- Documenting that associated casing pipes and hardware are installed.

The QA Official will observe the RAC's installation of the well laterals and headers, and blower system including:

- Identification of soils or other encountered materials during excavation of the well lateral trench;
- Soil sampling, as required, to determine lateral extent of VOC contamination.
- Spot checking the header trench for conformance to the lines and grades presented on the Contract Drawings;
- Monitoring of pipe connections;
- Measurement of thickness and placement of the backfill materials around the well lateral and header pipes;
- Observation that the handling procedures used do not damage the pipe;
- Monitoring of joints and connections, alignment of pipe, and pipe boot connections;
- Observation of required pressure testing of the pipe; and,
- Observation at lining of pipeline sections.

Any significant deviation from the Technical Specifications, Contract Drawings, or Manufacturer guidelines will be brought by the QA Official to the immediate attention of the Owner's Representative.

4.4 Mechanical/Electrical

The Contract Documents will require that the mechanical and electrical equipment for the SVE system be installed by the RAC in general conformance with the Technical Specifications, Contract Drawings, and Manufacturer guidelines. Manufacturer operations manuals, guidelines, and other pertinent information will be submitted by the RAC for inclusion in the project Operations and Maintenance Manual.

The following activities by the QA Team are anticipated:

- Observe the installation of mechanical and electrical equipment, verify it is installed in the proper location and inspect it for physical defects;
- Observe continuity checks and other electrical tests on electrical wiring systems, and testing of all electrical components (ventilation fan, lighting, receptacles, etc);

- Observe mechanical checkout by RAC including blower and pump motor starting, pipe pressure testing, valve operation, and checkout of controls and interlocks prior to the introduction of SVE well gas vapors or condensate to the system;
- Review field calibration sheets for all field instrumentation such as total hydrocarbon analyzer, flow meters, pressure gauges, sample ports, and level sensors; and
- Review results of noise testing conducted by RAC.

At a minimum, RAC will perform and submit documentation for the following:

- Submit calibration sheets for all instrumentation;
- Obtain local electrical code inspection certificates if required;
- Submit results of noise testing;
- Complete a mechanical checkout of all electrical and process equipment; and,
- Submit as-built information regarding location, connections, and controls.

5.0 RECORDS AND REPORTING

5.1 Contract Drawings

The RAC and the Engineer will each maintain on the Site one clean set of the Contract Drawings, Remedial Design Report, Technical Specifications, and other reports pertinent to the construction of the remedy, along with a record of all proposed, pending, and approved changes and clarifications to the Contract Documents. Additionally, the RAC will maintain at all times one set of marked-up as-built Contract Drawings indicating progress of construction.

5.2 Contract Submittals

Submittals required by this CQAP and the Technical Specifications will be logged in at the time of receipt by the Owner's Representative. A record of the submittal and review form indicating favorable review or rejection of the submittal will be kept on file at the office of the Owner's Representative. A copy indicating the final status will be returned to the RAC for his files.

5.3 Daily Records

The QA Official will keep records of construction and testing activities which, in conjunction with the RAC's submitted manuals and as-built drawings, will enable preparation of record drawings and the Construction Completion Report.

Summary Reports will be numbered sequentially and will include the following:

- Date and project name;
- Weather conditions, including daily high and low temperature, wind conditions, and precipitation;
- General description of work activities at the Site;
- List of personnel and equipment operating on-site, number of hours worked, number of hours on standby, and work activities completed;
- Description of work completed for the day, referencing stationing and grid coordinates as appropriate;
- Identification of areas worked including lift number, panel number, and/or seam number;
- Reduced-scale drawings or sketches showing work completed (i.e., hand-marked redline mark-ups);

- Summary of test samples taken, with locations and elevations as appropriate;
- Summary of test results compared with Specification requirements and indication of pass or fail status for the samples;
- Test equipment calibrations, unless recorded in other field notebooks;
- List of off-Site materials received;
- Summary of QA and QC procedures used for the day and list of CQA personnel on-Site;
- Problems encountered and resolutions reached; and
- Health and Safety issues.

5.4 Construction Problem and Corrective Measure Reports

A problem is defined herein as material or workmanship that apparently does not meet the requirements of the Contract Documents. Construction Problem and Corrective Measures Reports will be cross-referenced to specific monitoring and testing data sheets where the problem was identified. Construction Problem and Corrective Measures Reports shall be numbered sequentially and include the following information:

- Detailed description of the problem;
- Location and probable cause of the problem;
- How and when the situation was identified;
- How the problem was corrected or resolved;
- Any measures taken to prevent similar problems in the future; and,
- Signatures of Monitoring Personnel, Engineer, and RAC supervisor.

5.5 Photographic Records

The QA Team will take photographs identified by date, time, location, and name of person taking the photograph. Photographic record sheets will be completed to organize the photographs. Such sheets will be numbered sequentially and will include the following information:

- The date, time, and location where the photograph was taken and weather conditions;
- The size, scale, and orientation of the subject matter photographed;

- Location and description of the work;
- The purpose of the photograph; and,
- Initials of the photographer.

5.6 Certification of Completion of Remedial Action

Following completion of construction, the Engineer will complete the Construction Completion Report for the project. The report, submitted to CSDG and USEPA, will certify that, based on observation of the RAC's work and on evaluation of furnished test results and other information, the RAC's work has been completed in general conformance with the Contract Drawings, Technical Specifications, with any significant exceptions noted. The report will include the following:

- Narrative description of all pre-final and final inspections;
- Narrative description of substantial completion inspection;
- Narrative description of construction activities completed at the Site and copies of all Daily Summary Reports;
- Description of all punch-list items and their documented resolution;
- Description of material deviations from Contract Document requirements and justification for such changes;
- Description of all maintenance activities, including seeding, cutting of vegetative growth, etc.;
- Description of vegetative growth during one-year period;
- Description of CQA testing procedures;
- Summary of CQA test data including copies of all soil and geosynthetics monitoring and test data sheets;
- Maps and drawings showing CQA test locations;
- Descriptions of procedures used by the RAC to rework or repair areas with failing CQA test results;
- Color photographs of major project features;
- As-built plans and details of the completed construction, prepared by the RAC; and,
- Certification statement by a Professional Engineer of completion of construction in general accordance with the Contract Documents.

5.7 Records Storage

Throughout the construction, all original documents or copies will be kept in an organized file on-site. All records and documents relating to the Remedial Action will be preserved and retained by CSDG, as required under the Consent Decree, for a minimum of 10 years following receipt from USEPA of a Certificate of Completion of the Work. At the close of this ten-year period documents may be destroyed with USEPA concurrence in accordance with the procedures outlined in the Consent Decree.

5.8 Meetings

A pre-construction meeting will be held at the Site prior to the beginning of the construction. The meeting will be attended by the Project Coordinator, Engineer, QA Official, RAC, and Agency representatives.

Progress meetings will be held on-site as specified (i.e., weekly and monthly) at a time designated by the Owner's Representative. The progress meetings will typically be attended by the Engineer, QA Official, RAC, and the regulatory agencies may attend as desired. The purposes of the meeting are:

- Review progress of construction and compare same to schedule;
- Coordinate work for the upcoming week;
- Review implementation of the CQAP and identify any areas or conditions requiring reconsideration;
- Identify any problem areas such as work deficiencies, work conflicts, or situations/conditions materially affecting work;
- Potential modifications to either the design, CQAP or construction methods programs which would improve the final work product; and,
- Health and safety procedures/monitoring.

A separate, or as part of a progress meeting, pre-task kick-off meeting will be held for critical construction activities. These meetings will be held a minimum of one week prior to the initiation of the following activities:

- Demolition of the MPA Area;
- Capping of the MPA Area;
- Drilling of the SVE wells;
- Excavation of the PCB impacted area;
- Trenching and installation of SVE well pipes; and,
- Start-up of the SVE blower system.

6.0 PLAN MODIFICATION PROCEDURE

Should this CQAP require modification, the proposed change will be submitted in writing to the Engineer and Project Coordinator for review. If the proposed modification is deemed to be appropriate, a letter requesting approval of the change will be submitted to the USEPA. An addendum will be attached to all copies of the CQAP following receipt of approval from USEPA.

APPENDIX E3

OPERATION AND MAINTENANCE PLAN

Golder Associates Inc.

1951 Old Cuthbert Road, Suite 301
Cherry Hill, NJ 08034
Telephone (856) 616-8166
Fax (856) 616-1874
www.golder.com

OPERATION AND MAINTENANCE PLAN
MALVERN TCE SUPERFUND SITE
EAST WHITELAND TOWNSHIP, PENNSYLVANIA

Prepared for:

Chemclene Site Defense Group

Prepared by:

Golder Associates Inc.
1951 Old Cuthbert Road, Suite 301
Cherry Hill, New Jersey 08034

September 2004

Project No.: 003-6000

TABLE OF CONTENTS

SECTION			PAGE
1.0	INTRODUCTION		E3-1
	1.1	Site Background	E3-1
	1.2	Purpose of the Operations and Maintenance Plan	E3-2
2.0	REMEDIAL ACTION DESCRIPTION		E3-3
	2.1	Soil Vapor Extraction (SVE) System	E3-3
		2.1.1 Layout	E3-3
		2.1.2 SVE System Design	E3-3
	2.2	SVE Treatment Design	E3-6
		2.2.1 Influent SVE Characteristics	E3-6
		2.2.2 Process Design	E3-6
		2.2.3 Process Units Design	E3-7
		2.2.4 Process Instrumentation and Control System	E3-9
	2.3	MPA Cap	E3-10
3.0	OPERATION AND MAINTENANCE PLAN		E3-11
	3.1	Soil Vapor Extraction Systems	E3-11
		3.1.1 SVE System Operation Procedures	E3-11
		3.1.2 SVE Maintenance Procedures	E3-11
		3.1.3 Potential SVE System Problems and Remedies	E3-12
	3.2	SVE System Equipment Maintenance	E3-12
		3.2.1 SVE Blowers	E3-13
		3.2.2 Condensate Pump	E3-13
		3.2.3 Air/Water Separator	E3-13
		3.2.4 Extraction Wells	E3-13
		3.2.5 SVE Piping and Components	E3-13
		3.2.6 Other Requirements	E3-14
		3.2.7 MPA Cap Maintenance Requirements	E3-14
	3.3	Alternative Operations and Maintenance	E3-14
	3.4	Operations and Maintenance Schedule	E3-14
4.0	SITE MANAGEMENT PLAN FOR OPERATIONS AND MAINTENANCE		E3-15
	4.1	Introduction	E3-15
	4.2	Owner	E3-15
	4.3	Project Coordinator	E3-16
	4.4	Project Manager	E3-16
	4.5	Design Engineer	E3-16
	4.6	Operations and Maintenance Contractors	E3-17
	4.7	Hazardous and Non-Hazardous Waste Disposal Facilities	E3-17
5.0	HEALTH AND SAFETY PLAN FOR OPERATIONS AND MAINTENANCE		E3-18
6.0	SAMPLING, ANALYSIS, AND MONITORING PLAN		E3-19
	6.1	Radius of Influence Assessment	E3-19
	6.2	SVE System Monitoring Data Interpretation and Evaluation Procedures	E3-19
	6.3	Quality Assurance	E3-20
7.0	CONTINGENCY PLAN		E3-21

8.0 REPORTING E3-22
8.1 Operation and Monitoring Reporting Procedures E3-22
8.2 Maintenance Reporting Procedures E3-23
8.3 Incident Reporting Procedures E3-23

9.0 PERMIT EQUIVALENCIES E3-24
9.1 Soil Vapor Extraction System E3-24

10.0 MODIFICATION OF PLANS E3-25
10.1 Introduction E3-25
10.2 Replacement of Contractors E3-25
10.3 Addition of Contractors E3-25
10.4 Changes in Project Team E3-25
10.5 Changes in O&M Activities E3-26

LIST OF TABLES

Table E3-1 Remediation Area Monitoring Log Sheet
Table E3-2 SVE Blower System Monitoring Log Sheet
Table E3-3 Wellhead Monitoring Log Sheet
Table E3-4 Preventative Maintenance Schedule
Table E3-5 Measurement of ROI

LIST OF FIGURES

As-Built Drawings – to be provided following construction

LIST OF APPENDICES

Vendor Manuals – to be provided following construction

1.0 INTRODUCTION

1.1 Site Background

On December 13, 1999, the U.S. District Court issued its order regarding the entering of the Consent Decree (CD) between the Chemclene Site Defense Group (CSDG) and the United States Environmental Protection Agency (USEPA) for execution of the remaining remedy elements.

Golder Associates, on behalf of the CSDG, prepared a Remedial Design Work Plan (RDWP), which was submitted to USEPA on May 4, 2000 (Golder Associates, 2000). Two subsequent responses to USEPA and Pennsylvania Department of Environmental Protection (PADEP) comments were prepared and submitted to the Agencies on August 16, 2000 and October 18, 2000. These three documents (the initial RDWP and the two response to comments documents) comprised the entire RDWP, which was approved by USEPA on October 31, 2000.

The Pre-Design Investigation (PDI) was implemented in accordance with the RDWP between November 2000 and January 2002. During the course of performing the PDI, an alternative technology for remediating soils in the Former Disposal Area / Mounded Area (FDA/MA) portion of the Site (soil vapor extraction with limited excavation) was identified as potentially being more effective than the excavation and off-site disposal remedy specified in the USEPA Record of Decision (ROD). Therefore, with USEPA's concurrence, a Soil Vapor Extraction (SVE) pilot study was conducted during the PDI. The results of the PDI and the SVE Pilot Study were presented to USEPA and PADEP in a Pre-Design Investigation Report (PDI Report; Golder Associates, May 2002). Concurrently, Golder Associates prepared and submitted to the USEPA and PADEP a Focused Feasibility Study (FFS) that formally evaluated the SVE alternative comparing it to the ROD selected remedy for FDA/MA soils (Golder Associates, May 2002). USEPA and PADEP issued comments on the PDI Report and FFS on July 31, 2002. Golder Associates, on behalf of the CSDG, provided a written response to the Agencies' comments on September 13, 2002. The USEPA approved the PDI Report and FFS on November 8, 2002. USEPA is currently preparing a formal Amendment to the 1997 ROD to replace the current excavation remedy for FDA/MA soils with the alternative SVE remedy, which includes Site Preparation and limited excavation and capping (hereinafter referred to as the SVE remedy or SVE alternative remedy.

1.2 Purpose of the Operations and Maintenance Plan

This Operation and Maintenance Plan (O&M Plan) has been prepared for the Remedy as an appendix to the Design Report. This O&M Plan covers the soil remedies (i.e., SVE system and MPA cap). If required, an O&M Plan will be prepared for the groundwater remedy when the final remedy is selected and implemented. The O&M Plan includes a Site Management Plan (Section 4.0), Health and Safety Plan (Section 5.0), Sampling, Analysis, and Monitoring Plan (Section 6.0) and Contingency Plan (Section 7.0). This plan anticipates the operation and maintenance requirements of the SVE system without the knowledge gained from the initial operations period. It may become necessary to modify this Plan for some aspects of operation if system adjustments are required during the initial operations period. This O&M Plan is a guideline for the ongoing remediation activities taking place and will require periodic modifications during different phases of the remedial action to reflect the changing conditions and operations, as appropriate.

2.0 REMEDIAL ACTION DESCRIPTION

The following provides a brief description of the components of the Remedial Action covered by this O&M Plan. A Site Layout and Process and Instrumentation Diagrams for the SVE system are presented in the Design Report and As-Built documentation.

2.1 Soil Vapor Extraction (SVE) System

2.1.1 Layout

The SVE system consists of the following:

- Wellhead Control Building, located in the MA, will manifold the individual pipelines from each SVE well together before continuing to the SVE Blower Building. The Wellhead Control Building will be used to control and monitor individual wells and groups of wells, including recording/adjusting flow rates and pressures, and collecting vapor samples;
- SVE Blower Building, located to the west of the FDA/MA, to house the SVE Blower System and Control System;
- SVE Blower System – Each of the two 600 standard cubic feet per minute (scfm) blower systems includes a positive displacement blower, air filter, silencers and electrical and control systems for creating a vacuum for vapor extraction and discharging the vapors to a heat exchanger and the vapor phase carbon treatment system;
- Control System consisting of a local control panel located in the SVE Blower Building;
- Soil Vapor Extraction System consisting of shallow/intermediate and deep soil vapor extraction wells in the FDA/MA areas of the Site; and,
- Condensate Collection System – Condensate will be collected within the air/water separator located inside the blower building. The condensate that collects in the SVE piping between the wells and the Wellhead Control Building will be sloped either towards the well to allow condensate to flow back into the well from which it was extracted or towards the Wellhead Control Building to allow condensate to be removed. From the low point in piping, where the wellhead pipes extend vertically into the wellhead control building, a condensate pool allows for removal of this liquid from the low point using a portable pump. The condensate that collects in the SVE piping between the Wellhead Control Building and the SVE Blower Building will be sloped towards the blower building and pulled into the air/water separator by the vacuum of the blower.

2.1.2 SVE System Design

The SVE well layout consists of two types of SVE wells of similar construction: shallow/intermediate SVE wells and deep SVE wells. The shallow well network includes 35

shallow/intermediate SVE wells (including three existing from the pilot study). These wells cover the delineated area of impacted soils, and are designed to remove volatile organic compounds (VOCs) from between about 5 ft to 30 ft bgs. The network of the 15 deep zone SVE wells (including three existing from the pilot study) are installed only where VOC contamination was detected relatively deep (below 30 ft bgs). Thus, a total SVE well network of 50 wells was initially proposed for the FDA/MA. Additional delineation of the vertical and horizontal extent of the soil contamination in limited locations will be conducted as part of construction. Pending the results of this additional delineation, additional SVE wells may be required. The well layout has been divided into five separate SVE remediation areas defined as having similar soil VOC concentrations and/or historical use:

- Area A – MA North;
- Area B – MA Central;
- Area C – FDA North;
- Area D – MA South; and,
- Area E – FDA South.

A typical SVE well construction is presented in the Design Report and the As-built drawings. Each SVE well (shallow/intermediate or deep) will be constructed in a similar manner except that the depth of the well and length of well screen will vary based on Site conditions. The proposed well screen depths and lengths are presented in the Design Report. The open interval of the well will be sealed with a bentonite chip layer and a cement/bentonite grout layer, installed up to the base of the flush mount box near the ground surface. The well will be completed at the surface within a flush mount box anchored in concrete, sloped to drain stormwater away from the box.

Existing SVE wells and monitoring points from the pilot study that will be used for SVE wells in the remedy will not be reconstructed to adjust the depth, diameter, or screen interval. The upper portion of those wells/monitoring points will be modified to tie in with the SVE piping system.

Most piping in the FDA and MA will be located below ground. Pipe used within the Wellhead Control Building or other aboveground locations will be Schedule 80 PVC. High-density polyethylene (HDPE SDR 11) will be used for all underground pipe. Flange connections will be provided between PVC and HDPE pipe. Locating piping below ground provides freeze

protection and temperature control, will avoid the potential operational problems of expansion/contraction, minimizes the need to heat trace an aboveground piping system, and will minimize potential vandalism. The width of the trenches for the piping will be kept to a minimum and will vary depending on the number of laterals/headers installed within a common trench.

A pipe diameter of 2 inches has been selected up to the Wellhead Control Building to minimize pressure losses, so that a minimum of 12 inches Hg can be maintained at each well head, conservatively assuming a maximum flow of 30 scfm per well. The SVE well lateral piping between each well and the Wellhead Control Building will be sloped at a minimum of 1.0% either towards the wells to allow condensate to flow back into the well from which it was extracted or towards the Wellhead Control Building to allow condensate to be removed. Common piping in trenches will be sloped at the same pitch. At the Wellhead Control Building, the individual SVE well piping will be manifolded together before going on to the SVE Blower Building. The piping from each SVE well will first be manifolded together, grouped by the five remediation areas. Each pipe of the combined flow from each remediation area will be a minimum of 6 inches, then will be manifolded together for the total SVE flow. The header piping between the Wellhead Control Building and the SVE Blower Building will be a minimum diameter of 10 inches and will be sloped at a minimum of 1.0% toward the SVE Blower Building to allow gravity flow of the condensate toward the air/water separator in the blower system. A pressure (vacuum) gauge, sampling/flow port, and a control valve will be installed on each header for the remediation areas prior to the manifolds.

In the Blower Building will be the air/water separator, which will remove any entrained water from the vapor. The air/water separator will be equipped with high-level switches. Following the air/water separator, a flow port, pressure indicating transmitter, ambient air inlet valve for maintaining blower vacuums, and an air filter will be installed. The combined ambient air / SVE vapor stream will then be divided to flow through two blowers piped in parallel. Each of the two blower branches has an inlet silencer, outlet silencer, and upstream and downstream isolation valves. After the outlet silencer the streams combine to one outlet stream, which then continues to a heat exchanger and the vapor phase carbon treatment system. A temperature indicator, temperature transmitter, pressure transmitter, total hydrocarbon analyzer sample lines, and flow indicating transmitter will be installed along the piping between the blower outlet and the stack. The three-unit vapor-phase activated carbon system will be located outside the SVE Blower

Building. Two carbon units will be connected in series with the third unit as a spare. Before the first unit, between the first and second carbon units and after the second carbon unit will be pressure indicators, sample ports, and lines to the total hydrocarbon analyzer for continuous monitoring of organic vapors. The effluent from the second carbon unit will exit through a stack before being discharged to the ambient air. The third carbon unit will be after the second carbon unit but before the sample ports and other controls, such that the third unit can be put in service and monitored, if needed.

Piping located near the blowers and on the blower discharge to the activated carbon units will be constructed of Schedule 40 galvanized steel pipe. The blower effluent piping will be cased for burn protection. Provisions will be made for a future condensate collection tank if condensate generation rates are higher than expected, including leaving adequate room for the tank and transfer pump, and locations for automatic pump controls in the air/water separator. It is recognized that, if installed, a permanent storage tank may need to be registered with PADEP.

The SVE Blower Building will be insulated and sound proofing installed to minimize noise from the blower. Minimal heat will be required due to the heat produced by the operation of the blowers. Building heat and/or heat tracing will be provided only to the extent needed to prevent freeze problems should both blowers go down.

2.2 SVE Treatment Design

2.2.1 Influent SVE Characteristics

The SVE system is designed to remove VOCs from the soil by applying a vacuum using a blower through a number of extraction wells. Estimated concentrations of VOCs in the vapor stream are presented in the Design Report.

2.2.2 Process Design

The SVE system is designed to physically remove volatile compounds, generally from vadose or unsaturated zones. It's an in situ process employing vapor extraction well and vacuum blowers, supplying the motive force, inducing air flow through the soil matrix. Flow rate from the FDA/MA is expected to be approximately 10 to 20 scfm for the 50 shallow/intermediate and deep SVE wells. However, of these 50 wells, 6 are wells that will be reused from the pilot study. These pilot study wells have a screen length of 5 feet, so the flow extracted is expected to be less

than 20 scfm. Therefore, 900 scfm is expected to be the maximum flow that could be obtained from the current SVE system layout and lower flows in the range of 700 to 800 scfm are probable. As a contingency, the SVE blower system is sized for 1200 scfm, providing 300 scfm of excess capacity should air flow rates be greater than expected or if additional wells are determined to be needed. The blower system will consist of two 600 scfm blowers manifolded together such that each blower can operate any part of the system. The use of a two-blower system will provide redundancy and allow for continued operation of the more critical SVE wells (i.e., those located in areas that contain higher concentrations of VOCs) during temporary blower shutdown for preventative maintenance or due to mechanical problems. One blower will also be provided with a variable frequency drive (VFD) to provide additional control and provide energy savings. The blower system for the SVE system will have a rating of 16 inches Hg. The SVE piping system is sized such that no less than 12 inches Hg can be obtained at each SVE well, provided flows per well are 10-20 scfm.

The Pilot Study Mass Removal Tests (MR Tests) estimated mass removal rates. Notably, the Pilot Study was conducted in an area having some of the highest VOC concentrations. The calculated mass removal rate for the MR1 test (shallow zone), based on laboratory analyses of soil vapor samples, was approximately 18 pounds per day. The calculated mass removal rate for the MR2 test (deep zone) was less than 1 pound per day, which is consistent with the substantially lower amounts of VOCs in the lower clay.

The full-scale SVE system mass removal rates are expected to be proportionally less than those experienced in the Pilot Study since most of the SVE wells will be extracting soil vapor from areas having substantially less VOC concentrations. Based on these estimates, the entire SVE system is anticipated to initially remove VOCs at a rate of approximately 57 lb/day. This initial rate is anticipated to be followed by considerably decreasing mass removal rates over time. Additional information regarding the calculation of SVE mass loading can be found in the Design Report.

2.2.3 Process Units Design

This section provides a description of the SVE system. Equipment identification numbers are provided to reference items on the P&IDs presented in the Design Report.

Air/Water Separator AWS-300

The blower system will be equipped with a high capacity moisture separator to maximize blower protection. By separating and containing entrained liquids, the separator protects the vacuum blower from damage and corrosion. The separator shall be rated for high vacuum and shall have a high-level float switch installed to shut the system if the separator is not drained. The piping prior to the air/water separator shall be fitted with an air flow pitot tube sensor with airflow differential pressure gauge, a vacuum gauge, and sample port. Ambient air can be introduced to the SVE vapors through a tee equipped with an air filter and control valve. The air/water separator shall be equipped with a sight gauge, level switches, and manual hand operated diaphragm pump for evacuation of accumulated sludge and fluids and, if necessary, a manual back up to the condensate transfer pump (P-300), described below, in emergency situations.

Condensate Pump P-300

The condensate pump shall be used to manually transfer the condensate from the air/water separator to a receiving container or truck intended to dispose of the liquid off-site. A special vacuum operated priming loop will be installed on the pump discharge to allow operations and priming under high vacuum conditions. Future provisions shall be made to provide automatic operation of the condensate pump by the use of conductance actuated low and high-level sensors and a condensate storage tank (T-350) with an increased storage capacity. A separate high-level float switch will shut down the blower system if the primary sensor fails and/or the air/water separator has not been drained.

Rotary Lobe Positive Displacement Blowers B-500 & B-600

Each package blower system shall utilize a rotary lobe positive displacement blower. They shall be constructed with cast iron housings, impellers and covers, and shall be oil filled for lubrication of the internal timing gears used to rotate the lobes in close tolerance. A separately mounted motor mounted to the side of the blower housing, utilizing sheaves and one or more belts, shall drive the blower. The unit shall be fitted with oil level observation ports and grease fittings for routine O&M requirements. In-line filters shall protect the vacuum blower and subsequent equipment from suspended water droplets, soil particles, scale and other particles. On this vapor extraction system, an air filter shall be placed between the condensate storage tank and the blower. The filter shall consist of steel housing which will contain a replaceable filter cartridge. The filter cartridge shall be pleated polyester felt, and shall be washable and reusable. A vacuum

relief valve located on each blower inlet, and a pressure relief valve, located on each blower outlet, shall provide secondary mechanical protection for the blower.

2.2.4 Process Instrumentation and Control System

The package blower system shall consist of an air/water separator, condensate pump, positive displacement blower, air filter, silencers, sound enclosure, and associated controls. The package blower system shall be skid mounted within the sound dampening building located to the west of the FDA/MA. A control panel will preset key process variables (blower vacuum, SVE flow rate, total hydrocarbons, common blower discharge pressure, and blower discharge temperature) and alarms. The control panel is equipped with a dialer to notify O&M personnel of alarm conditions.

Each SVE well will be provided with a pressure (vacuum) gauge, flow and sample port, and a control valve. Vapor flow rate and pressure from each area will be measured by using an anemometer in conjunction with a pressure gauge. The combined vapor flow rate from all the areas will also be measured by permanent pitot tube and differential pressure meter in conjunction with a pressure gauge located inside the Wellhead Control Building prior to the addition of dilution air.

Atmospheric air can be introduced to the vapor stream prior to the blower. The use of atmospheric air allows for the control of the blower vacuum and the dilution of high organic vapors. Since it is expected that long-term vapor concentrations will be relatively low, the SVE package system was not constructed to be explosion-proof. Therefore, it will be necessary to dilute the SVE vapors on start-up to minimize the potential for an explosive gas to enter the blowers. The rate of dilution air shall be manually controlled by the dilution air butterfly valve (V-400). A filter (AF-400) on the dilution air stream shall prevent particulates from entering the system.

To protect the blower, gross entrained water shall be removed from the influent SVE vapors by an air/water separator (AWS-300). A close-coupled centrifugal pump (P-300) shall manually transfer the condensate collected at the bottom of the air/water separator to a container or truck intended to dispose the liquid off-site, or potentially in the future, to automatically transfer the condensate to T-350. In manual mode, LSH-300 will alarm on the control panel to indicate to the operator that the air/water separator needs to be emptied. In the future automatic mode, the high and low level sensors (LSH-300 and LSL-300) in the air/water separator could be used to control

the condensate pump (P-300). A separate high high level switch (LSHH-300) will alarm on the control panel and activate the blower system common shutdown switch in either manual or automatic mode. The blower system common shut down switch will activate the alarm dialer.

The inlet and outlet of the SVE blowers will be monitored for high vacuum (low pressure) and/or low vacuum (high pressure), by a pressure transmitter (PT-450 and PT-650), with pressure readings displayed locally and on the control panel. A remote readout of the blower vacuum will be displayed in the wellhead control building. The pressure-indicating transmitters for the blower inlet (PT-450) and outlet (PT-650) shall provide a continuous vacuum readout available to operators to record data for monitoring purposes and will be recorded by a data logger. Adjustable setpoints for low inlet pressure (high vacuum) or high inlet pressure (low vacuum) conditions shall be provided that will activate an alarm (PAL-450 or PAL-650) on the control panel for the blower system to shut down. Adjustable setpoints for high pressure discharge shall be provided that will activate an alarm (PAH-650) on the control panel for the blower system to shut down. The inlet and outlet connections to the blower shall be equipped with silencers to minimize noise. Vacuum relief valves (VRV-500 and VRV-600) for each blower located on the blower inlet, and a pressure regulating valves (PRV-501 and PRV-601), located on the blower outlet, will provide secondary mechanical protection for the blower in the event the blower vacuum and pressure shutdown switch interlocks fail.

A total hydrocarbon analyzer equipped with three channels will monitor vapor concentrations in the SVE vapors from the SVE system and after treatment by the first carbon unit and the second carbon unit prior to discharge to the environment. The analyzer will periodically, once per hour, measure, display and transmit to the data recorder total VOCs for each location. If VOCs at any location reach an adjustable high setpoint, an alarm light will be displayed on the control panel, the blowers will be shut down and the alarm dialer activated.

2.3 MPA Cap

To protect groundwater, the ROD describes the remedy of the MPA as the installation of a cap. The MPA cap includes the installation of a low density polyethylene cover, including a vegetated soil layer and vegetated drainage swale located to the north of cap to control stormwater runoff from the cap. Penetration seals are made around groundwater monitoring wells and other protrusions.

3.0 OPERATION AND MAINTENANCE PLAN

This section describes the requirements for operating and maintaining the SVE system

3.1 Soil Vapor Extraction Systems

3.1.1 SVE System Operation Procedures

The extraction wells in the FDA/MA will be connected to Blowers B-500 and B-600, each of which is designed to operate on a continuous basis up to a maximum capacity of 600 scfm. The expected flow rate from each well is approximately 10 to 20 scfm.

Some of the operation and monitoring requirements and features for the SVE system are described below:

- Continuous monitoring of the blower suction and discharge pressures, total vapor flow, total hydrocarbon analysis before the carbon units, between the carbon units, and after the carbon units, and blower discharge temperature, which will be recorded by the data logger;
- Field measurement of vacuum and vapor flow of source areas will be conducted. Field measurements of wellhead vacuums and pressures will be monitored to provide operational information regarding individual well performance. Flow measurements will be made using a portable anemometer;
- Total VOCs at remediation areas wells, from remediation areas, and blower effluent will also be monitored using a field instrument such as a photoionization detector (PID);
- Vapor samples for VOC analysis will be collected from the blower effluent;
- The outlet temperature of the blower will also be recorded;
- Blower hour meter and ammeter readings will be recorded; and,
- Monitoring of condensate generation using a flow totalizer.

The Sampling and Analysis Plan prepared as part of the Design Report includes a Performance Monitoring Schedule, which includes the proposed frequency of these requirements.

3.1.2 SVE Maintenance Procedures

Although the SVE system is designed to operate continuously at a relatively constant rate, mechanical failures, or other conditions in the SVE system may require intermittent shutdowns.

Spares of high maintenance, blower and pump parts will be readily available, or long-lead time parts will be stored at the Site for repair purposes to reduce system down-time. Service contracts will be maintained to provide for non-routine repairs. Anticipated routine maintenance for the SVE system is described in Section 3.2.

3.1.3 Potential SVE System Problems and Remedies

Repairs and maintenance of the SVE system shall be conducted using standard materials and approved contractors. However, the SVE system may experience equipment problems that cannot be repaired, replaced, or modified using standard materials and subcontractors. The Agencies will be notified, in accordance with Section 8.0, of these problems and the corrective actions taken to mitigate the problems.

Adjustments to the SVE system will be made if it is determined that the system is not performing optimally, including:

- Inspecting for piping leaks or well seal leaks if an abnormal increase in the flow rate or loss of vacuum occurs;
- Inspecting for perched water accumulation if abnormal increase in vacuum or lower vapor flow rate occurs or vacuum and/or flow rate swings are observed;
- Inspecting for blockage, heat damage, and moisture if shut down of the system occurs; and,
- Adjusting well vacuums and flow rates or temporarily turn off wells to adjust the vacuum influence to minimize possible dead zones and improve cleanup rates.

The USEPA Remedial Project Manager will be notified of any proposed changes in the operating system in accordance with Section 8.0. Such changes will be implemented consistent with the ROD, and will not be implemented without prior USEPA and PADEP approval.

3.2 SVE System Equipment Maintenance

A maintenance-tracking program will be compiled for each piece of equipment to identify equipment that requires replacement or upgrading. The tracking program will be used to identify when equipment requires maintenance in accordance with the manufacturer's recommendations and to maintain a historical database of equipment repairs. The items that will be included in the program are listed below for each system.

3.2.1 SVE Blowers

- Exercise all electrical breakers, starters, switches;
- Calibrate flowmeter, vacuum gauge, and temperature sensor;
- Listen for unusual motor or blower noises;
- Grease the blower motor;
- Change the vacuum pump oil;
- Inspect the blower drive belt for signs of excessive looseness or wear;
- Tighten/replace belts;
- Check for signs of leaks;
- Check for abnormal temperatures, vacuums, and pressures;
- Check air filter condition, and replace if required; and
- Check for signs of cracks or broken supports, fixtures or components.

3.2.2 Condensate Pump

- Exercise all electrical breakers, starters, and switches;
- Listen for unusual motor or pump noises;
- Grease pump motor; and,
- Check for signs of cracks or broken supports, fixtures or components.

3.2.3 Air/Water Separator

- Inspect and clean level switches in the entrainment separator;
- Check for signs of leaks anywhere in the system;
- Monitor liquid level in moisture separator tank;
- Pump out any accumulated sludge in the moisture tank; and,
- Check for signs of cracks or broken supports, fixtures or components.

3.2.4 Extraction Wells

- If necessary, remove condensate that accumulates at the low point;
- Inspect each SVE wellhead, piping, control valves and associated aboveground equipment for damage or leakage;
- Inspect the flow and sample port for blockade;
- Inspect and, if necessary, replace well seals or locks; and,
- Clean wells, screens, and sand pack, as needed.

3.2.5 SVE Piping and Components

- Verify proper operation of the vacuum and pressure relieve valve;
- Exercise all valves;
- Calibrate flow meters and vacuum gauges;
- Inspect insulation and heat tracing of the pipe lines;
- Inspect pipelines and supports; and,
- Routinely calibrate the total hydrocarbon analyzer.

3.2.6 Other Requirements

- Check proper operation of alarms and shutdown interlocks;
- Exercise all electrical breakers, starters, switches, etc.;
- Meggar condensate pump and blower current; and,
- Inspect buildings for leaks or structural damage.

3.2.7 MPA Cap Maintenance Requirements

The MPA cap will require minimal maintenance by the property owner (Lloyd Balderston). The vegetative layer should be cut as required, estimated to be approximately 3 times per year, to minimize damage to the root systems from long grass cuttings. Prior to any cutting, the cap and swale should be inspected and any erosion repaired and reseeded The entire length of the fence shall be inspected and repaired as necessary

3.3 Alternative Operations and Maintenance

As described in Section 3.1, repairs, modifications or replacement to equipment (i.e., pumps, blowers, instruments, piping, etc.) will be performed using standard materials and subcontractors. The USEPA will be notified, in accordance with Section 8.0, if repairs to equipment require the system to be shutdown for longer than 14 calendar days.

3.4 Operations and Maintenance Schedule

The Preliminary Performance Monitoring Schedule, which includes operational requirements, is found in the Design Report. Log sheets for scheduled monitoring are included as Tables E3-1 through E3-4 of this Plan. A Preventative Maintenance Schedule is presented in Table E3-5 of this Plan, which is based on items noted in Section 3.2 of this Plan. This table will be revised as needed after construction completion and initial start-up, when actual manufacturer's operating and maintenance requirements and frequencies can be incorporated.

4.0 SITE MANAGEMENT PLAN FOR OPERATIONS AND MAINTENANCE

4.1 Introduction

The O&M activities will be performed under the direction and supervision of the Project Coordinator. During the O&M phase, should any of the key project individuals identified in this O&M Plan change, in accordance with Section XIII of the Consent Decree, the CSDG will notify USEPA in writing at least 5 days prior to such changes for USEPA approval.

The Project Management Team Organization is shown below and descriptions of the various key project team members' responsibilities are also provided below.

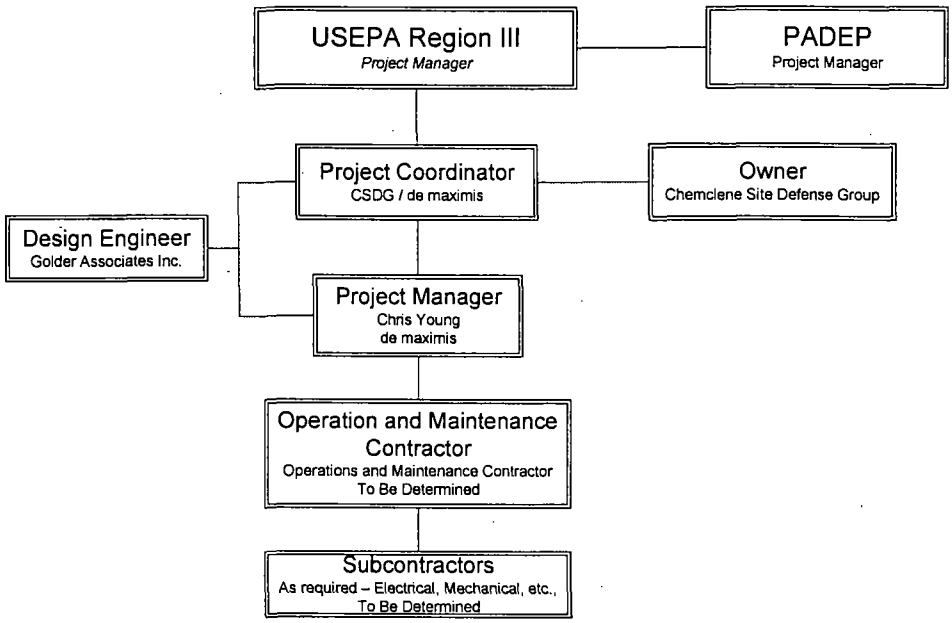

4.2 Owner

Name: Chemclene Site Defense Group (CSDG), c/o de maximis, inc.
Address: 1125 S. Cedar Crest Blvd., Suite 202
Allentown, PA 18103
Phone No: (610) 435-1151
Fax No: (610) 435-8459

The Owner (CSDG) is responsible for the implementation of the O&M for the Site under CERCLA regulatory requirements and the Consent Decree. The Owner (CSDG) is responsible

for selecting and hiring all consultants and contractors involved with the performance of the O&M at the Site.

4.3 Project Coordinator

Name: Chris Young, de maximis, inc.
Address: 1125 S. Cedar Crest Blvd., Suite 202
Allentown, PA 18103
Phone No: (610) 435-1151
Fax No: (610) 435-8459

The Project Coordinator will serve as the Owner's representative and coordinate with the USEPA Remedial Project Manager, the Pennsylvania Department of Environmental Protection (PADEP), the O&M Project Manager, Design Engineers, and O&M Contractors. The Project Coordinator will have the overall responsibility for all work to be undertaken in compliance with the Administrative Order.

4.4 Project Manager

Name: Chris Young, de maximis, inc.
Address: 1125 S. Cedar Crest Blvd., Suite 202
Allentown, PA 18103
Phone No: (610) 435-1151
Fax No: (610) 435-8459

The Project Manager will be responsible, on behalf of the Project Coordinator, for the coordination of the O&M contractors involved in the execution of the O&M phase. The Project Manager will be responsible for checking that the parties involved meet their contractual obligations with respect to the execution of the O&M. This will include managing overall operations, cost, and quality issues and reporting respective information to the Project Coordinator. In addition, it will be the responsibility of the Project Manager to facilitate communications between members of the contracted parties.

4.5 Design Engineer

Name: Brian J. Eichlin, P.E.
David N. Buscemi, P.E.
Address: Golder Associates Inc.
1951 Old Cuthbert Rd., Suite 301
Cherry Hill, NJ 08034
Phone No: (856) 616-8166
Fax No: (856) 616-1874

The Design Engineer listed above was responsible for the design and shall review and oversee the construction of the SVE remedy. The Design Engineer may continue to provide support on an as-needed basis during the O&M phase.

Golder Associates was previously approved by the USEPA to perform design services for the project.

4.6 Operations and Maintenance Contractors

Name: To be determined
Address:

Phone No.:
Fax No.:

The O&M Contractor will be responsible for supplying supervision, labor, equipment and material to perform the O&M activities described in this and related plans such as the Sampling and Analysis Plan. In addition, the O&M Contractor is responsible for:

- Operating the system in accordance with the permit equivalencies;
- Maintaining Site security;
- Where applicable, provide testing and operator training for process equipment;
- Where applicable, maintain spare parts to minimize the downtime of systems; and,
- Provide health and safety monitoring in accordance with the O&M Contractor's HASP.

The O&M Contractor may employ specialty subcontractors, including electricians, pipe fitters, PLC programmers, and welders, to perform maintenance activities.

4.7 Hazardous and Non-Hazardous Waste Disposal Facilities

All residual materials from O&M of SVE system will be treated and disposed of in accordance with Federal, State, and local regulations.

The quantities and destination of the residual materials sent off-site will be included in the quarterly reports to the Agencies. Manifests, disposal records, and other documents will be maintained on-site in accordance with RCRA and other applicable regulations.

5.0 HEALTH AND SAFETY PLAN FOR OPERATIONS AND MAINTENANCE

The O&M Contractor will be responsible for preparing an action-specific Health and Safety Plan (HASP) for the Operations and Maintenance of the SVE system. The O&M Contractor selected for long-term O&M services will prepare their own HASP for the Site based on the operating conditions as built. The action-specific HASP will be submitted to the Agencies. Personnel performing such activities as sampling, SVE system operation, confined space entry, or any intrusive work must be 40-hour OSHA Health and Safety trained and have proper regular re-training and medical monitoring in accordance with 29 CFR 1910 and 1926 and other applicable laws and regulations. Personnel performing operations and maintenance in which exposures to potentially hazardous materials is unlikely (e.g., grass cutting, fence repairs), may not require 40-hour OSHA Health and Safety training at the discretion of the O&M Contractors' Project Manager. At a minimum, these personnel will be briefed regarding existing Site conditions. It will be the responsibility of each contractor to ensure that all employees and agents adhere to applicable laws, regulations, and policies while on-site.

6.0 SAMPLING, ANALYSIS, AND MONITORING PLAN

The performance of the SVE system will be monitored and evaluated to help determine achievement of the Soil Cleanup Performance Standard. Performance monitoring includes collection of routine field data as described in this O&M Plan and the Sampling and Analysis Plan. Post operational soil sampling will also be conducted but is not considered part of the O&M. Soil sampling will be conducted in accordance with the Design Report and the Sampling and Analysis Plan.

6.1 Radius of Influence Assessment

Measurement of an SVE well radius of influence (ROI) will help determine if the system is operating as expected. Typically, the ROI of an SVE well can be evaluated by plotting the log of subsurface vacuum versus distance from the extraction well, and extrapolating to a predetermined vacuum.

Measurement of ROIs of SVE wells during operation will be performed by utilizing existing and new SVE wells. Neighboring SVE wells that impact the expected ROI of the well being tested must be closed prior to measurement. To measure the ROI of a specific well, the vacuum will be measured at wells at the edge of the predicted ROI, and compared to the modeled value.

Table E3-5 provides guidance for measurement of ROIs of SVE wells. For each SVE well, the nearby wells that are required to be turned off, and proposed vacuum measurement locations are indicated.

6.2 SVE System Monitoring Data Interpretation and Evaluation Procedures

Frequent monitoring will occur during the first month of start-up of the SVE system, including vapor vacuum, flow and temperature, VOC concentrations, and condensate generation rate. Regular sampling and monitoring well take place once steady-state conditions have been reached, but at a reduced rate. These sampling and monitoring frequencies are shown in the Design Report and the Sampling and Analysis Plan.

Data from each source area will be evaluated to determine progress towards meeting the cleanup standards. Monitoring of the VOCs in the vapor will be the primary source of information to determine when source areas may be remediated and confirmation soil sampling may take place.

The Sampling and Analysis Plan, included as an appendix of the Design Report, provides details regarding sampling and monitoring.

6.3 Quality Assurance

The Quality Assurance Plan of the SVE monitoring procedures is presented in the Sampling and Analysis Plan.

7.0 CONTINGENCY PLAN

If during operation of the SVE system, it is indicated through regular system monitoring or soil samples that one or more of the source areas is not progressing towards the cleanup standards, then several contingency measures will be evaluated and/or implemented. These measures may include:

- Installation of additional SVE wells;
- Increasing vapor flow of a particular well by turning off other SVE wells;
- Modify or replace blower to increase blower vacuum and/or flow capacity;
- SVE well pulsing;
- Operation of less contaminated wells or piezometer wells as air inlet wells including the potential preheating of the air;
- Installation of surface cover to prevent short circuiting; and,
- If after review with the Agencies it has been determined that operation of the SVE system at source area is not progressing towards cleanup standards, then discussions with the Agencies will be initiated to determine the next step to complete the work.

If it is determined that contingent measures are needed, then a detailed Contingency Plan will be submitted to the USEPA for approval.

8.0 REPORTING

The following sections describe reporting procedures operation, maintenance, and monitoring activities. A summary of operations and the results of analytical samples will be summarized in a Quarterly Progress Report submitted to USEPA. A detailed review of SVE operations will be submitted annually as part of an Annual Report.

8.1 Operation and Monitoring Reporting Procedures

SVE operation and monitoring data will be collected as described in this Plan. The quarterly progress reports will include:

- Actions taken towards compliance with the consent decree;
- Results of sampling events and other data;
- Trends in laboratory VOC levels in the combined extracted vapor ;
- A summary of operational problems and solutions;
- Activities scheduled for the next quarter; and,
- Proposed changes to system operations and to the O&M Plan, if required, including the monitoring schedule presented in the Design Report and Sampling and Analysis Plan.

The annual reports will assess the progress of the operation of the SVE system and will include:

- Trends in field and laboratory VOC levels in the combined extracted vapor and from individual wells and source area when sampling results are available;
- Summary of SVE well extraction flow rates and applied vacuums;
- Summary of SVE system vacuum influence;
- Cumulative operation time and extracted vapor volumes for each well or source area;
- A summary of operational problems and solutions; and,
- Proposed changes to system operations and to the O&M Plan, if required, including the monitoring schedule presented in the Design Report and Sampling and Analysis Plan.

Log sheets used to collect operating data will be completed by the SVE Operation Contractor and maintained on-site. Operational issues, repairs, system adjustments, and the results of inspections will be recorded in a logbook.

8.2 Maintenance Reporting Procedures

The Operations Contractor will document all repair and maintenance activities described in this plan.

8.3 Incident Reporting Procedures

The Project Coordinator will notify the Agency if the SVE system will be turned off for maintenance for duration of more than 14 days continuously.

9.0 PERMIT EQUIVALENCIES

9.1 Soil Vapor Extraction System

The SVE system will be operated in accordance with the approved PADEP standards and permit requirements as well as local permit requirements. Permit equivalency requirements will be followed during operation of the SVE system, and adjustments will be made, as necessary, to the monitoring schedule.

10.0 MODIFICATION OF PLANS

10.1 Introduction

It is expected that as-built conditions and initial operations will affect operational requirements of the SVE system. Within 120 calendar days following startup of the SVE system, this O&M Plan will be revised and submitted to the Agencies. Following that, it may be necessary to modify the O&M Plan and related Plans during the course of operations. These modifications may include:

- Replacement of contractors;
- Addition of contractors;
- Changes in project team;
- Addition of detailed equipment manufacturer's maintenance procedures; or
- Changes to the type and frequency of O&M activities, including monitoring.

The methodology for effecting changes in the Plans is described below.

10.2 Replacement of Contractors

It may be necessary to replace a contractor during the course of the project. If such action becomes necessary, the Project Coordinator will request approval from the USEPA in writing 5 days prior to the intended change.

10.3 Addition of Contractors

Some contracts for operations of the O&M phase may be bid after the O&M Plan has been approved by the USEPA. This may necessitate the addition of contractors. Once a contractor has been added to the project team, the qualifications for the contractor will be submitted to USEPA for approval prior to beginning work.

10.4 Changes in Project Team

In the event it becomes necessary to make changes to the project team, the Project Coordinator will notify the USEPA in writing explaining the reasons for the change. The resume, qualifications, education, and experience of the candidate replacement will be provided to USEPA for approval 5 days prior to the intended change.

10.5 Changes in O&M Activities

Operational experience may indicate that certain activities described in the O&M Plan are unnecessary. Modifications to the SVE system may also require the removal of equipment that requires operation and maintenance. In the event of such changes, the Project Coordinator will submit to the Agency a request for modification of the O&M Plan.

TABLE E3-1
REMEDIATION AREA MONITORING LOGSHEET
OPERATION AND MAINTENANCE PLAN
MALVERN TCE SITE, EAST WHITELAND, PENNSYLVANIA

Date: _____

Operator: _____ Items listed are to be monitored monthly

AREA	Vacuum (inches Hg)	Velocity Measurement (ft/min)	FID Reading (ppmv VOCs)	Vapor Flow (1) (scfm)
Remediation Area A				
Remediation Area B				
Remediation Area C				
Remediation Area D				
Remediation Area E				

(1) Calculate vapor flow based on conversion factor from velocity measurement

TABLE E3-2
SVE BLOWER SYSTEM MONITORING LOGSHEET
OPERATION AND MAINTENANCE PLAN
MALVERN TCE SITE, EAST WHITELAND, PENNSYLVANIA

Items listed are to be monitored weekly

Date/Time	Operator Initials	System Vacuum	SVE Wellfield Flow (scfm)	Condensate In A/W Separator Sight Gauge (gallons)	Condensate Transferred from A/W Separator (gallons)	Dilution Air Flow (scfm)	Combined Vapor Flow (1) (scfm)	Blower Outlet Temperature (degF)	System Pressure Before Carbon Units	System Pressure Between Carbon Units	System Pressure After Carbon Units
		PG-200	FI-200	SG-300		FI-400	FI-450	TI-630	PG-700	PG-800 or 900	PG-900 or 950

(1) Calculate vapor flow based on conversion factor for differential pressure instrument

TABLE E3-3
WELLHEAD MONITORING LOGSHEET
OPERATION AND MAINTENANCE PLAN
MALVERN TCE SITE, EAST WHITELAND, PENNSYLVANIA

Date: _____

Operator: _____

Items listed are to be monitored quarterly

WELL	REMEDIATION AREA	Vacuum (Inches Hg)	Velcoity Measurement (ft/min)	FID Reading (ppmv VOCs)	Vapor Flow [1] (scfm)
A-1S	A				
A-2S	A				
A-3S	A				
A-4S	A				
A-5S	A				
A-6S	A				
A-7S	A				
SVE-1S	A				
VP-1S	A				
VP-2S	A				
A-4D	A				
A-6D	A				
A-7D	A				
SVE-1D	A				
VP-1D	A				
VP-2D	A				
B-1S	B				
B-2S	B				
B-3S	B				
B-4S	B				
B-5S	B				
B-6S	B				
C-1S	C				
C-2S	C				
C-3S	C				
C-4S	C				

TABLE E3-3
WELLHEAD MONITORING LOGSHEET
OPERATION AND MAINTENANCE PLAN
MALVERN TCE SITE, EAST WHITELAND, PENNSYLVANIA

Date: _____

Operator: _____ Items listed are to be monitored quarterly

WELL	REMEDIATION AREA	Vacuum (Inches Hg)	Velcoity Measurement (ft/min)	FID Reading (ppmv VOCs)	Vapor Flow (1) (scfm)
C-5S	C				
C-6S	C				
C-7S	C				
C-8S	C				
C-9S	C				
C-10S	C				
C-11S	C				
C-9D	C				
D-1S	D				
D-2S	D				
D-3S	D				
D-4S	D				
D-1D	D				
D-3D	D				
D-4D	D				
E-1S	E				
E-2S	E				
E-3S	E				
E-4S	E				
E-1D	E				
E-2D	E				
E-3D	E				
E-4D	E				
E-5D	E				

(1) Calculate vapor flow based on conversion factor from velocity measurement

TABLE E3-4
PREVENTATIVE MAINTENANCE SCHEDULE
OPERATION AND MAINTENANCES PLAN
MALVERN TCE SITE, EAST WHITELAND, PENNSYLVANIA

EQUIPMENT / MAINTENANCE ITEM	Daily	Weekly	Biweekly	Monthly	Quarterly	Semi-Annually	Annually	As Needed	Other/Comment
SVE Blowers									
Exercise electrical breakers, starters, and switches							X		
Calibrate flowmeter, vacuum gauge, and temperature sensor							X		
Listen for unusual motor or blower noises				X					
Grease the blower motor				X					
Change vacuum pump oil						X			
Inspect the blower drive belt for signs of excessive looseness or wear				X					
Tighten/replace belts								X	
Check for signs of leaks				X					
Check for abnormal temperatures, vacuums, and pressures readings				X					
Check air filter condition					X				
Replace air filter								X	
Check for signs of cracks or broken supports, fixtures or components				X					
Calibrate Total Hydrocarbon Analyzer		X							
Condensate Pump									
Exercise electrical breakers, starters, and switches							X		
Listen for unusual motor or pump noises				X					
Grease pump motor				X					
Check for signs of cracks or broken supports, fixtures or components				X					
Air/Water Separator									
Inspect and clean level switches in the entrainment separator								X	
Check for signs of leaks				X					
Monitor liquid level in moisture separator tank				X					
Pump out any accumulated sludge in the tank								X	
Check for signs of cracks or broken supports, fixtures or components				X					
Inspect the vacuum gauges, airflow sensor, temperature gauge and safety valves.					X				
Extraction Wells									
Inspect the wells for condensate								X	
Empty the condensate from wells								X	
Inspect each SVE wellhead, piping, control valves and associated aboveground equipment for damage or leakage				X					
Inspect the flow and sample port for blockage								X	
Inspect well seals or locks						X			
Replace well seals or locks								X	
Clean well screens and redevelopment of the sand pack								X	

TABLE E3-4
PREVENTATIVE MAINTENANCE SCHEDULE
OPERATION AND MAINTENANCES PLAN
MALVERN TCE SITE, EAST WHITELAND, PENNSYLVANIA

EQUIPMENT / MAINTENANCE ITEM	Daily	Weekly	Biweekly	Monthly	Quarterly	Semi-Annually	Annually	As Needed	Other/Comment
SVE Piping and Components									
Verify proper operation of the vacuum and pressure relieve valve						X			
Exercise all valves						X			
Calibrate flow meters and vacuum gauges							X		
Inspect insulation and heat tracing of the pipe lines							X		Just prior to winter
Inspect pipelines and supports				X					
Cap System									
Inspect Cap and Swale							X		
Repair Erosion and Reseed								X	
Mow Vegetative Layer								X	
Other Requirements									
Check proper operation of alarms and shutdown interlocks							X		
Exercise all electrical breakers, starters, switches, etc.							X		
Meggar condensate pump and blower current								X	
Inspect building for leaks or structural damage.					X				

(1) This maintenance schedule will be modified after construction to reflect the maintenance intervals recommended by the equipment manufacturers.

TABLE E3-5
MEASUREMENT OF ROI
OPERATION AND MAINTENANCE PLAN
MALVERN TCE SITE, EAST WHITELAND, PENNSYLVANIA

Well ID	Remediation Area	Wells to be turned off (1)	Primary Monitoring Point / Expected Vacuum (Inches of H2O)	Secondary Monitoring Point / Expected Vacuum (inches of H2O)	Primary Measured Vacuum (inches of H2O)	Secondary Measured Vacuum (inches of H2O)
AREA A: MA NORTH						
A-1S	A	All Wells in Remediation Area A and Wells B-1S and B-2S	A-3S / < 1	None		NM
A-2S	A	All Wells in Remediation Area A and Wells B-1S and B-2S	A-4D / 1	VP-4S / 1		
A-3S	A	All Wells in Remediation Area A and Wells B-1S and B-2S	A-4S / 1	A-5S / 1		
A-4S	A	All Wells in Remediation Area A and Wells B-1S, B-2S, B-3S, and B-4S	SVE-1S / 1	A-3S / 1		
A-5S	A	All Wells in Remediation Area A and Wells B-1S, B-2S, B-3S, B-4S and C-5S	VP-1D / > 1	VP-5D / 1		
A-6S	A	All Wells in Remediation Area A and Wells B-1S, B-2S, B-3S, B-4S, B-5S, and C-5S	VP-1D / 1	VP-4S / 1		
A-7S	A	All Wells in Remediation Area A, All Wells in Remediation Area B, and Well C-5S	VP-1D / 1	VP-2S / 1		
SVE-1S	A	All Wells in Remediation Area A and Wells B-1S, B-2S, B-3S, B-4S, and C-5S	VP-2S / 1	VP-5S / < 1		
VP-1S	A	All Wells in Remediation Area A and Wells B-1S, B-2S, B-3S, and B-4S	VP-4S / 1	VP-5D / <1		
VP-2S	A	All Wells in Remediation Area A and Wells B-1S, B-2S, B-3S, B-4S, B-5S, and C-5S	SVE-1S / 1	VP-4S / < 1		
A-4D	A	All Wells in Remediation Area A and Wells B-1S, B-2S, and B-3S	A-5S / 1	VP-1S / 1		
A-6D	A	All Wells in Remediation Area A and Wells B-1S, B-2S, B-3S, B-4S, B-5S, and C-5S	VP-1D / 1	VP-4S / 1		
A-7D	A	All Wells in Remediation Area A, All Wells in Remediation Area B, and Well C-5S	VP-1D / 1	VP-2S / 1		
SVE-1D	A	All Wells in Remediation Area A, All Wells in Remediation Area B and Wells B-1S, B-2S, and B-3S	VP-4S / 1	VP-5D / 1		
VP-1D	A	All Wells in Remediation Area A and Wells B-1S, B-2S, B-3S, B-4S, and C-5S	VP-4D / 1	A-4S / <1		
VP-2D	A	All Wells in Remediation Area A and Wells B-1S, B-2S, B-3S, B-4S, B-5S, and C-5S	SVE-1D / 1	VP-4D / 1		
AREA B: MA CENTRAL						
B-1S	B	All Wells in Remediation Area A, All Wells in Remediation Area B and Wells C-5S and D-1S	VP-3S / 1	A-7S / <1		
B-2S	B	All Wells in Remediation Area B and Wells A-2S, A-3S, A-4S, A-4D, A-5S, A-6S/D, A-7S/D, SVE-1S, VP-1S, VP-1D, VP-2S, VP-2D, SVE-1D, C-2S, C-5S, C-6S, C-9S/D, D-1S, and D-1D	VP-3S / 1	A-7S/ <1		
B-3S	B	All Wells in Remediation Area B and Wells A-5S, A-6S/D, A-7S/D, SVE-1S, VP-1S, VP-1D, VP-2S, VP-2D, SVE-1D, C-5S, D-1S, D-2S, D-3S, D-1D, D-3D, and E-5D	B-5S / 1	VP-3S / <1		
B-4S	B	All Wells in Remediation Area B, All Wells in Remediation Area D, and A-6S/D, A-7S/D, VP-1S, VP-1D, VP-2S, VP-2D, C-5S, C-9S/D, D-1S, D-2S, D-3S, D-1D, D-3D, and E-5D	None	B-5S / <1	NM	
B-5S	B	All Wells in Remediation Area B and Wells VP-2S, VP-2D, C-5S, C-9S/D, D-1S, D-2S, D-3S, D-1D, D-3D, and E-5D	None	B-4S / <1	NM	

TABLE E3-5
MEASUREMENT OF ROI
OPERATION AND MAINTENANCE PLAN
MALVERN TCE SITE, EAST WHITELAND, PENNSYLVANIA

Well ID	Remediation Area	Wells to be turned off (1)	Primary Monitoring Point / Expected Vacuum (inches of H2O)	Secondary Monitoring Point / Expected Vacuum (inches of H2O)	Primary Measured Vacuum (inches of H2O)	Secondary Measured Vacuum (inches of H2O)
B-6S	B	All Wells in Remediation Area B, All Wells in Remediation Area D, and Wells A-7S/D, C-2S, C-4S, C-5S, C-6S, C-7S, C-9S/D, C-10S, E-1S/D, and E-5D	D-1S / 1	B-4S / <1		
AREA C: FDA NORTH						
C-1S	C	All Wells in Remediation Area C and Wells E-1S/D and E-2S/D	C-3S / 1	C-4S / <1		
C-2S	C	All Wells in Remediation Area C and Wells B-2S, B-6S, E-1S/D, and E-2S/D	C-4S / 1	C-1S / <1		
C-3S	C	All Wells in Remediation Area C and Wells B-6S, E-1S/D, and E-2S/D	C-4S / 1	C-1S / 1		
C-4S	C	All Wells in Remediation Area C and Wells B-2S, B-6S, E-1S/D, and E-2S/D	C-2S / 1	C-6S / 1		
C-5S	C	All Wells in Remediation Area C and Wells A-7S/D, VP-1S, VP-2S, VP-2D, B-1S, B-3S, B-5S, D-1S, D-2S, D-1D, and E-5D	None	B-2S / <1	NM	
C-6S	C	All Wells in Remediation Area C and Wells B-2S, B-6S, D-1S, D-2S, D-3S, D-1D, E-1S/D, E-2S/D, E-4S/D, E-5D	C-10S / 1	C-7S / <1		
C-7S	C	All Wells in Remediation Area C, All Wells in Remediation Area E, and Well B-6S	None	C-11S / 1	NM	
C-8S	C	All Wells in Remediation Area C and Wells E-1S/D and E-2S/D	C-3S / 1	C-11S / <1		
C-9S	C	All Wells in Remediation Area C, All Wells in Remediation Area D, All Wells in Remediation Area E, and Wells B-4S and B-6S	C-10S / 1	None		N
C-10S	C	All Wells in Remediation Area C and Wells B-2S, B-6S, C-1S, C-2S, D-1S, D-2S, D-1D, E-1S/D, E-2S/D, E-4S/D, E-5D	C-6S / 1	C-9S / 1		
C-11S	C	All Wells in Remediation Area C and Wells E-1S/D, E-2S/D, E-3S/D, and E-4S/D	None	C-8S / <1	NM	
C-9D	C	All Wells in Remediation Area C, All Wells in Remediation Area D, All Wells in Remediation Area E, and Wells B-4S and B-6S	C-10S / 1	None		NM
AREA D: MA SOUTH						
D-1S	D	All Wells in Remediation Area D, and Wells B-2S, B-3S, B-4S, B-5S, B-6S, C-5S, C-6S, C-9S/D, C-10S, E-1S/D, and E-5D	None	D-2S / <1	NM	
D-2S	D	All Wells in Remediation Area D, All Wells in Remediation Area E, and Wells B-4S, B-5S, B-6S, C-5S, C-6S, C-7S, C-9S/D, and C-10S	E-5D / >1	D-1S / 1		
D-3S	D	All Wells in Remediation Area D and Wells B-4S, B-6S, and C-9S/D	None	D-4S / <1	NM	
D-4S	D	All Wells in Remediation Area D and Wells B-6S, C-9S/D, E-1S/D, E-4S/D, and E-5D	None	D-3D / 1	NM	
D-1D	D	All Wells in Remediation Area D and Wells B-2S, B-4S, B-5S, C-9S/D, C-10S, C-11S, E-1S/D, E-2S/D, E-4S/D, and E-5D	None	B-6S / <1	NM	
D-3D	D	All Wells in Remediation Area D and Wells B-4S, B-6S, C-9S/D, E-1S/D, E-4S/D, and E-5D	D-4S / 1	D-2S / <1		

TABLE E3-5
MEASUREMENT OF ROI
OPERATION AND MAINTENANCE PLAN
MALVERN TCE SITE, EAST WHITELAND, PENNSYLVANIA

Well ID	Remediation Area	Wells to be turned off (1)	Primary Monitoring Point / Expected Vacuum (inches of H2O)	Secondary Monitoring Point / Expected Vacuum (inches of H2O)	Primary Measured Vacuum (inches of H2O)	Secondary Measured Vacuum (inches of H2O)
D-4D	D	All Wells in Remediation Area D and Wells B-4S, B-6S, C-9S/D, E-1S/D, E-4S/D, and E-5D	D-3D / 1	D-3S / <1		
AREA E: FDA SOUTH						
E-1S	E	All Wells in Remediation Area E and Wells B-6S, C-2S, C-3S, C-4S, C-5S, C-6S, C-7S, C-8S, C-9S/D, C-10S, C-11S, D-1S, D-2S, D-4S/D, and D-1D	None	E-2S / 1	NM	
E-2S	E	All Wells in Remediation Area E and Wells C-3S, C-4S, C-6S, C-7S, C-8S, C-9S/D, C-10S, C-11S, and D-2S	None	E-1S / 1	NM	
E-3S	E	All Wells in Remediation Area E and Wells C-7S, C-10S, and C-11S	None	E-4S / <1	NM	
E-4S	E	All Wells in Remediation Area E and Wells C-6S, C-7S, C-9S/D, C-10S, C-11S, D-2S, D-4S/D, D-1D, and D-3D	None	E-2S / 1	NM	
E-1D	E	All Wells in Remediation Area E and Wells B-6S, C-2S, C-3S, C-4S, C-5S, C-6S, C-7S, C-8S, C-9S/D, C-10S, C-11S, D-1S, D-2S, D-4S/D, and D-1D	None	E-2S / 1	NM	
E-2D	E	All Wells in Remediation Area E and Wells C-3S, C-4S, C-6S, C-7S, C-8S, C-9S/D, C-10S, C-11S, and D-2S	None	E-1S / 1	NM	
E-3D	E	All Wells in Remediation Area E and Wells C-7S, C-10S, and C-11S	None	E-4S / <1	NM	
E-4D	E	All Wells in Remediation Area E and Wells C-6S, C-7S, C-9S/D, C-10S, C-11S, D-2S, D-4S/D, D-1D, and D-3D	None	E-2S / 1	NM	
E-5D	E	All Wells in Remediation Area D, All Wells in Remediation Area E, and Wells B-4S, B-5S, B-6S, C-5S, C-6S, C-7S, C-9S/D, and C-10S	D-2S / >1	D-4S / <1		

Notes:
NM = Not Measured
(1) The wells to be turned off are all the wells in the same source area as the well being measured, as well as any wells within 75 feet of the well being measured and the primary monitoring point. The wells listed are the minimum to be turned off prior to the measurement of ROI. Other wells may also be turned off during the measurements.
(2) The design Radius of Influence (ROI) is 15 feet. The primary monitoring point is the nearest extraction well, no greater than approximately 17.5 feet away. The secondary monitoring point is another adjacent well, approximately 17.5 feet away, or if an adjacent well is not available, the next well may be approximately 30 feet away.

APPENDIX E4

SAMPLING AND ANALYSIS PLAN

Golder Associates Inc.

1951 Old Cuthbert Road, Suite 301
Cherry Hill, NJ 08034
Telephone (856) 616-8166
Fax (856) 616-1874
www.golder.com

Golder Associates

APPENDIX E4

REMEDIAL ACTION SAMPLING AND ANALYSIS PLAN MALVERN TCE SUPERFUND SITE EAST WHITELAND TOWNSHIP, PA

September 2004

Revision #2

	Signature	Date
Remedial Designer Project Manager	_____	
Remedial Designer Project QA Manager	_____	
USEPA Remedial Project Manager	_____	
PADEP Project Manager	_____	
USEPA Quality Assurance Manager	_____	

LIST OF ACRONYMS AND ABBREVIATIONS

ABBR.	TITLE
FDA/MA	Former Disposal Area / Mounded Area
MPA	Main Plant Area
COC	Chain of Custody
COPC	Chemicals of Potential Concern
HASP	Health and Safety Plan
CD/AOC	Consent Decree/Administrative Order on Consent
ROD	Record of Decision
SAP	Sampling and Analysis Plan
PDI	Pre-Design Investigation
FDR	Final (100%) Design Report
RD	Remedial Design
RA	Remedial Action
DNAPL	Dense Non-Aqueous Phase Liquid
PARCC	Precision, Accuracy, Representativeness, Completeness, and Comparability
VOC	Volatile Organic Compounds
PCB	Polychlorinated Biphenyls
ORP	Oxidation-Reduction Potential
pH	-log H^+ in any solution
DO	Dissolved Oxygen
MS/MSD	Matrix Spike/Matrix Spike Duplicate
CSDG	Chemclene Site Defense Group
USEPA	U.S. Environmental Protection Agency
PADEP	Pennsylvania Department of Environmental Protection
RDWP	Remedial Design Work Plan
QA/QC	Quality Assurance / Quality Control
CERCLA	Comprehensive Environmental Cleanup Liability Act
QAP	Quality Assurance Plan
MNA	Monitored Natural Attenuation
DQO	Data Quality Objectives
PID	Photoionization Detector
RI	Remedial Investigation
ODEX	Drilling method that allows for drilling and simultaneous insertion of temporary casing
NAPs	Natural Attenuation Parameters
CTPs	Conventional Treatment Parameters
TSS	Total Suspended Solids
COD	Chemical Oxygen Demand
TDS	Total Dissolved Solids
°C	Degrees Celsius
µS	Microsiemens
mV	Millivolts
SU	Standard pH Units
NTU	Nephelometric Turbidity Units
PVC	Polyvinyl Chloride
DOT	Department of Transportation

DI	Deionized Water
HCl	Hydrochloric Acid
HNO_3	Nitric Acid
NaOH	Sodium Hydroxide

G:\PROJECTS\003-6000 MALVERN\100% DESIGN\SAP\ACROS.DOC

TABLE OF CONTENTS

Acronyms

Table of Contents i

SECTION PAGE

1.0 PROJECT MANAGEMENT 1-1
1.1 Project Background 1-1
1.2 Project Organization 1-3
1.3 Project Description 1-4
1.4 Quality Assurance Objectives for Measurement 1-5
1.5 Training Requirements/Certifications 1-7
1.6 Documentation and Records 1-8
1.7 Site Background 1-9

2.0 MEASUREMENT/DATA ACQUISITION 2-1
2.1 Remedial Action Activities 2-1
2.2 Groundwater Monitoring Well Installation 2-1
2.2.1 Well Construction 2-1
2.2.2 Well Construction Materials 2-4
2.2.3 Well Development 2-4
2.3 Aquifer Performance Testing 2-5
2.3.1 Slug-Test Procedures 2-5
2.3.2 Pump-in Test Procedure 2-6
2.4 Sampling Method Requirements/Procedures 2-7
2.4.1 Groundwater 2-8
2.4.1.1 Monitoring Well Sampling 2-8
2.4.2 Soil 2-10
2.4.2.1 EnCore(TM) Sampling Methodology for VOCs 2-10
2.4.2.2 Soil Sampling for Parameters other than VOCs 2-11
2.4.3 Soil Vapor 2-12
2.4.4 Condensate 2-14
2.4.5 Vacuum, Flow, Time, and Temperature 2-15
2.4.6 Field Measurement Procedures 2-15
2.4.6.1 Water Level Measurements 2-15
2.4.6.2 Field Parameter Measurements 2-16
2.4.7 Decontamination 2-17
2.4.7.1 Drilling Equipment 2-18
2.4.7.2 Sampling Equipment 2-20
2.4.7.3 Groundwater Sampling Equipment (Non-Dedicated Submersible Pump) 2-20
2.4.7.4 pH, ORP, Temperature, Specific Conductance, Dissolved Oxygen, Turbidity, Depth to Water Probes, and Total Well Depth Recorders 2-21
2.4.7.5 Remedial Action Derived Waste 2-21
2.4.8 Field Documentation 2-22
2.4.8.1 Field Notebooks 2-22
2.4.8.2 Field Meters 2-23
2.4.8.3 Photo-Documentation 2-23

2.4.8.4 Correspondence/Communications 2-23
2.4.8.5 Changes in Procedures 2-23
2.5 Sample Handling and Custody Requirements 2-23
2.5.1 Sample Handling 2-23
2.5.2 Sample Preservation 2-24
2.5.2.1 Equipment 2-24
2.5.2.2 Procedure 2-24
2.5.3 Sample Identification 2-26
2.5.4 Sample Custody 2-27
2.5.4.1 Field Sample Custody 2-28
2.5.4.2 Laboratory Custody 2-30
2.5.5 Sample Packaging and Shipment 2-30
2.6 Analytical Method Requirements 2-31
2.7 Quality Control Requirements 2-31
2.7.1 Trip Blanks 2-31
2.7.2 Field Rinsate Blanks 2-32
2.7.3 Field Duplicates 2-32
2.7.4 MS/MSD 2-32
2.7.5 Internal QC Samples 2-32
2.8 Instrument/Equipment Testing, Inspection, and Maintenance Requirements 2-33
2.9 Instrument Calibration and Frequency 2-34
2.9.1 Field Calibration 2-34
2.9.1.1 Photovac Microtip Photoionization Detector and Photovac MicroFid Flame Ionization Detector 2-34
2.9.1.2 pH/ ORP/Temperature/Conductivity/Turbidity/Dissolved Oxygen Meter 2-35
2.9.2 Laboratory Calibration 2-36
2.10 Inspection/Acceptance Requirements for Supplies and Consumables 2-36
2.11 Data Acquisition Measurements (non-direct measurements) 2-37
2.12 Data Management 2-37

3.0 ASSESSMENT/OVERSIGHT 3-1
3.1 Assessments and Response Actions 3-1
3.1.1 Surveillance 3-1
3.1.2 Peer Review 3-2
3.1.3 Audits 3-2
3.1.3.1 Field/Sampling Audit 3-2
3.1.3.2 Laboratory Audits 3-2
3.1.4 Data Quality Assessment 3-3
3.1.5 Corrective Actions 3-3
3.2 Reports to Management 3-4

4.0 DATA VALIDATION AND USABILITY 4-1
4.1 Data Review, Validation, and Verification Requirements 4-1
4.2 Data Validation and Verification Methods 4-3
4.2.1 Data Validation 4-3
4.2.2 Data Reporting 4-4
4.3 Reconciliation With User Requirements 4-4

LIST OF TABLES

Table E4-1 Project Personnel
Table E4-2 Proposed Sampling Plan and Data Quality Objectives
Table E4-3 PARCC Criteria for Aqueous Samples
Table E4-4 Laboratory Precision and Accuracy Criteria for Aqueous TCL Samples
Table E4-5 PARCC Criteria for Soil Samples
Table E4-6 Laboratory Precision and Accuracy Criteria for Soil TCL Samples
Table E4-7 Laboratory Precision and Accuracy Criteria for Vapor TCL Samples
Table E4-8 Analytical Methods, Sample Containers, Preservation and Analytical Hold Times for Aqueous Samples
Table E4-9 Analytical Methods, Sample Containers, Preservation and Analytical Hold Times for Soil Samples
Table E4-10 Analytical Methods, Sample Containers, Preservation and Analytical Hold Times for Vapor Samples
Table E4-11 Target Compounds and Associated Laboratory Reporting Limits

LIST OF FIGURES

Figure E4-1 Example Chain of Custody Record
Figure E4-2 Example Groundwater Sample Groundwater Sample Field Information Form

1.0 PROJECT MANAGEMENT

1.1 Project Background

This Sampling and Analysis Plan (SAP), which includes Field Sampling and Quality Assurance Plans, has been prepared by Golder Associates Inc. (Golder Associates) on behalf of the Chemclene Site Defense Group (CSDG) as part of the Remedial Design for the Malvern TCE Superfund Site (Site). This SAP was originally prepared for Pre-Design Investigation (PDI) field activities and has been updated for the Final (100%) Design Report (FDR) to include additional methods and procedures that will be performed during the Remedial Action construction. The CSDG has entered into a Consent Decree (CD) (Civil Action 99-3715, date of entry December 13, 1999) with the United States Environmental Protection Agency (USEPA) to perform remedial actions at the Site in Whiteland Township, Pennsylvania. The CD specifies that a SAP be prepared to provide information regarding field, sampling, analytical and quality assurance/quality control (QA/QC) procedures that will be used to gather the data necessary for design of the remedy. The revised SAP for the FDR includes methods directed at measuring progress towards meeting the Performance Standards, and intended for use with sampling activities performed during the Remedial Action.

This SAP was prepared in accordance with the CD for the Site and the USEPA guidance documents specified below:

1. Guidance for Conducting Remedial Investigations and Feasibility Studies under CERCLA (EPA/540/G-89/004), dated October, 1988;
2. EPA NEIC Policies and Procedures Manual (EPA 330/9-78-001-R) dated May 1978, revised May 1986;
3. A Compendium of Superfund Field Operations Methods (OSWER Directive 9355-0-14), December 1987;
4. Guidance for the Data Quality Objective Process, EPA QA/G-4(EPA/600/R-96/055), dated August 2000
5. EPA Requirements for Quality Assurance Project Plans (EPA QA/R-5, November 1999); and
6. Interim Final Guidance for Conducting Remedial Investigations and Feasibility Studies under CERCLA (OSWER Directive 9355.3-01).

The format of this SAP follows that of guidance Document No. 5, which specifies four groups of elements containing a total of twenty-five essential elements to be included in a SAP. The four groups are Project Management, Measurement/Data Acquisition, Assessment/Oversight, and Data Validation/Usability. The first three elements of the Project Management Group (Title Page including provision for approval signatures, the Table of Contents, and the Distribution List) are included in the front of this document. The remaining four Project Management elements are discussed in this section. The remaining three groups of elements are presented in Sections 2 through 4, respectively.

This SAP describes general QA/QC procedures that will be used during all aspects of sample collection and handling in the field and in the laboratory. Laboratory QA procedures regarding personnel, management structure, analytical equipment, and data management are contained in the laboratory's Quality Assurance Plan (QAP). A copy of the laboratory QAP will be provided to USEPA upon request. Any substantive revisions to this SAP will be submitted to USEPA Region III for approval prior to implementation.

Many of the quality assurance procedures to be used for this project are described in the following documents:

1. Test Methods for Evaluating Solid Waste - Physical/Chemical Methods, SW-846, Third Edition, November 1986; Update IIIA, November 2000;

2. Standard Methods for the Examination of Water and Wastewater, 18th Edition, 1992, APHA-AWWA-WPCF;

3. Methods for Chemical Analysis of Water and Wastes (EPA-600/4-79-020), USEPA, 1979, revised 1983;

4. Innovative Approaches to Data Validation, USEPA Region III, June 1995;

5. Region III Modifications to National Functional Guidelines for Organic Data Review, September 1994;

6. Region III Modifications to Laboratory Data Validation Functional Guidelines for Evaluating Inorganic Analyses, April 1993; and,

7. Annual Book of ASTM Standards, Volume 4.08, April 1999.

8. USEPA Contract Laboratory Program National Functional Guidelines for Organic Data Review, October 1999.

9. USEPA Contract Laboratory Program National Functional Guidelines for Inorganic Data Review, February 1994.

The text of this document, which presents each of the four elements of the SAP, refers to the above listed documents, as appropriate. This approach is in accordance with USEPA guidance documents, which require that referencing of other documents be clearly defined in order to facilitate location of required information.

The signatures on the cover sheet of this SAP demonstrate the review, approval, acceptance and responsibility for the QA/QC procedures specified herein by the project team. A list of key project personnel determined thus far identified for this project is presented in Table E4-1 of this SAP.

1.2 Project Organization

The project team organization and contact information is provided on Table E4-1. The listed project team members have primary responsibility for the project, although other individuals within their respective organization will be involved.

The lead regulatory Agency for the Site is USEPA Region III. Mr. James P. Harper is USEPA's Remedial Project Manager. USEPA's technical oversight contractor is CDM Federal. April Flipse of PADEP will also provide regulatory oversight on this project.

Mr. Chris R. Young of *de maximis, inc.* will serve as the Project Coordinator on behalf of the CSDG. Mr. Brian J. Eichlin, P.E. will serve as the Remedial Designer (RD) Project Manager.

The Remedial Action Contractor (RAC) has not been determined at this time. Preparation of Construction Bidding Documents is currently proceeding. The selection of a RAC is expected to take place shortly after Agency approval of the Final (100%) Design Report. CompuChem, a division of Liberty Analytical, of Cary, North Carolina (CompuChem), will provide analytical services for sampled media. CompuChem is a participant in the USEPA Contract Laboratory program and the National Environmental Laboratory Accreditation Conference and maintains all requirements associated with these accreditations. CompuChem is also a member in good

standing with the American Council of Independent Laboratories. Drilling and surveying services have not been contracted yet.

If at any time during this project, the identity or role of any of these key organizations or personnel changes, the USEPA would be notified.

1.3 Project Description

The purpose of this SAP is to describe the sampling and analysis activities which will be conducted in support of the Remedial Action. The Remedial Action includes capping of soils and groundwater remediation in the Main Plant Area (MPA), excavation and off-site treatment and disposal of contaminated soils from the Former Disposal Area/Mounded Area (FDA/MA) and Monitored Natural Attenuation (MNA) of groundwater in the FDA/MA. The following sampling activities will be conducted during the Remedial Action:

- Installation of one additional monitoring well (well CC-11R) at the location shown on Figure 3-2 of the FDR;
- Characterization of soil and debris in existing roll-off (FDA)
- Characterization of soil and debris excavated from soil piles, excavation pits, and upper 2 feet of soil (FDA);
- Characterization of water removed from excavation pits (FDA);
- Confirmation sampling of soil from SVE well drilling (FDA/MA);
- Groundwater sampling (FDA/MA);
- Collection of vapor samples upon start-up of SVE system;
- Collection of condensate samples upon start-up of SVE system; and,
- Collection of confirmatory soil samples following shut-down of SVE system.

Sampling programs to be performed under this SAP are summarized in Table E4-2. Figure E4-2 provides a schedule of the remedial design activities.

1.4 Quality Assurance Objectives for Measurement

The USEPA Data Quality Objectives (DQO) Guidance document specifies two descriptive data categories to assist in interpretation of data collected under the Superfund program. These two data categories (Screening Data with Definitive Confirmation and Definitive Data) are defined below as they appear in the guidance document.

"Screening data are generated by rapid, less precise methods of analysis with less rigorous sample preparation. Sample preparation steps may be restricted to simple procedures such as dilution with a solvent, instead of elaborate extraction/digestion and cleanup. Screening data provide analyte identification and quantification, although the quantification may be relatively imprecise. At least 10% of the screening data are confirmed using analytical methods and QA/QC procedures and criteria associated with definitive data. Screening data without associated confirmation data are not considered to be data of known quality."

"Definitive data are generated using rigorous analytical methods, such as approved EPA reference methods. Data are analyte-specific, with confirmation of analyte identity and concentration. Methods produce tangible raw data (e.g., chromatograms, spectra, digital values) in the form of paper printouts or computer-generated electronic files. Data may be generated at the site or at an off-site location, as long as the QA/QC requirements are satisfied. For the data to be definitive, either analytical or total measurement error must be determined."

The analytical data produced by the monitoring program established for this Site are considered "definitive data". Field data are considered screening data but definitive confirmation will not be performed for these measurements. As part of the evaluation component of the QA program, results are compared with certain data quality indicators. These data quality indicators are part of the overall DQOs for the project. DQOs for field and laboratory analysis are provided in Table E4-2. Tables E4-3 through E4-7 provide details regarding the planned chemical analyses and the quality criteria used to assess the data.

QA program objectives for the analytical laboratory will be presented in the laboratory's QAP. In general, data quality indicators include precision, accuracy, representativeness, completeness, and comparability (PARCC). Each indicator may be defined as follows:

1. Precision is the agreement or reproducibility among individual measurements of the same property, usually made under the same conditions;

2. Accuracy is the degree of agreement of a measurement with the true or accepted value;

3. Representativeness is the degree to which a measurement accurately and precisely represents a characteristic of a population, parameter, or variations at a sampling point, a process condition, or an environmental condition;

4. Completeness is a measure of the amount of valid data obtained from a measurement system compared with the amount that was expected to be obtained under correct normal conditions; and,

5. Comparability is an expression of the confidence with which one data set can be compared with another data set in regard to the same property.

QA objectives vary according to the specific objectives of each analysis. The *accuracy, precision* and *representativeness* of data will be functions of the sample origin, analytical procedures and the specific sample matrices. QC practices used to evaluate these data quality indicators include use of accepted analytical procedures, adherence to hold time, and analysis of QC samples such as blanks, replicates, spikes, calibration standards and reference standards. Tables E4-3 and E4-4 summarize the PARCC criteria for aqueous samples, Tables E4-5 and E4-6 summarize the PARCC criteria for soil samples and Table E4-7 summarizes the PARCC criteria for vapor samples

For each parameter analyzed, quantitative QA objectives for precision, accuracy and sensitivity (detection limits) were established in accordance with the specific analytical method employed, published historical data, laboratory method validation studies, and laboratory experience with similar samples.

Representativeness is a non-quantitative (qualitative) characteristic which primarily addresses proper design of a sampling program in terms of number and location of samples and sample collection techniques. The rationale for the number and location of samples for this project is discussed in the RDWP and the sampling procedures are described in Section 2.0 of this SAP. The representativeness of the analytical data is also a function of the procedures used to process the samples. Standard USEPA or USEPA-accepted analytical procedures will be followed.

Completeness is a quantitative characteristic which is defined as the fraction of valid data obtained from a measurement system (sampling and analysis) compared to that which was planned. Completeness can be less than 100 percent due to low sample recovery, sample damage, or disqualification of results which are outside of control limits due to laboratory error or matrix-specific interference. Completeness is documented by including sufficient information in the laboratory reports to allow the data user to assess the quality of the results. For this project, an attempt will be made to attain 85 percent completeness or better (field and laboratory) where chemical analysis is required. The completeness goal for laboratory measurements will be 90 percent.

Comparability is a qualitative characteristic which allows for comparison of analytical results with those obtained by other laboratories. This may be accomplished through the use of standard accepted methodologies, traceability of standards to National Bureau of Standards (NBS) or USEPA sources, use of appropriate levels of quality control, reporting results in consistent, standard units of measure and participation in inter-laboratory studies designed to evaluate laboratory performance.

Samples collected during the project will be analyzed for the parameters outlined in Table E4-2. The DQOs, as summarized by the PARCC criteria on Tables E4-3 through E4-7, may not always be achievable. The USEPA Region III data validation guidelines provide direction for the determination of data usability. Qualified data can often provide useful information, although the degree of certainty associated with the results may not be as planned. Professional judgment will be used to determine data usability with respect to project goals.

1.5 Training Requirements/Certifications

Samples will be collected by personnel trained in the use of the sampling equipment. Training will include use of proper sampling protocols as well as Health and Safety procedures. Laboratory personnel will have been trained in the analysis of samples and the review of analytical data. Personnel performing the Remedial Action activities will be required to present documentation of OSHA 40-hour HAZWOPER training and annual updates prior to actively performing intrusive work activities at the Site.

1.6 Documentation and Records

All field records will be compiled and retained in the RAC's project files. Field parameter data collected and analyzed during the Remedial Action construction will be tabulated for inclusion in the Remedial Action Construction Completion Report. Analytical data packages will contain all information necessary for data validation, if data validation should be required. At a minimum, the following information is needed as appropriate to the analytical methodology:

- Case narrative;
- Chain of Custody (COC) records;
- QC summaries;
- Analytical data report;
- Calibration information;
- Chromatograms;
- Quantitation reports;
- Spectra;
- Analytical sequence logs; and,
- Sample preparation logs.

The laboratory will keep sample evidence files containing the following items:

- COC records;
- Sample log-in information (if applicable);
- Copies of laboratory records and notebook pages;
- Copies of laboratory bench data sheets;
- Instrument raw data, both hardcopy and electronic;
- Chromatograms;
- Pertinent correspondence memoranda; and,
- Final report file.

The RAC will retain relevant and appropriate project information in project files. The information contained in these files includes, but is not limited to, the following items:

- COC records;
- Field notes and information;
- Correspondence and telephone memoranda;
- Meeting notes;
- Laboratory information;
- Data validation information;
- Reference information;
- Audit information; and,
- Copies of reports.

These files will be retained for a minimum of ten years following receipt of USEPA's notification of Certification of Completion of Work as specified in Paragraph 61.c. of Section XV of the CD. If the laboratory cannot retain its records for the 10-year period, all laboratory records will be provided to the RD or CSDG for retention.

1.7 Site Background

For detailed information, see Sections 1.0 and 2.0 of the FDR.

The Site is located in East Whiteland Township, Chester County, Pennsylvania as shown on Figure 1-2 of the FDR. The Site is owned and operated by Chemclene Corporation (Chemclene), whose current activity includes the storage, processing, sale and transportation of hydrogen peroxide at the 258 North Phoenixville Pike location. Former operations at the Site have primarily included the storage and sale of new chlorinated solvents and the distillation recycling of used chlorinated solvents for resale of the purified materials. The Site encompasses approximately five acres along the southeast side of Bacton Hill, and consists of a Main Plant Area (MPA), located at 258 North Phoenixville Pike, and the FDA and MA to the west. The FDA/MA are connected to the MPA by a long, narrow corridor that approximately parallels the Williams Transcontinental natural gas pipeline (Williams Transco pipeline) right-of-way, as shown on Figure 1-2 of the FDR.

Facilities at the MPA portion of the Site have included a former distillation building (Main Building), concrete pad storage areas, an office trailer, and an open garage. The Main Building and the garage sustained heavy fire damage on August 12, 1999. Two stainless steel, horizontal and cylindrical aboveground storage tanks, located along the northwestern Site boundary, are reportedly

used as part of the current Chemclene business to store hydrogen peroxide. A pile of debris and reportedly empty aboveground storage tanks are located in the area of a former above ground storage tank foundation, north of the Main Building. Other debris, used equipment, vessels, and reportedly empty above ground tanks are located in other areas of the MPA. The MPA, as shown on Figure 1-2 of the FDR, covers an area of approximately 1.25 acres.

The FDA/MA is located approximately 1,900 feet west of the MPA, and consists of a partially wooded area covering approximately 2 acres surrounded by a heavily forested area, as shown on Figure 1-2 of the FDR. As stated in the Final Data Summary Report (CH2MHill, April 1995), borrow pits (approximate 15 feet in depth) were excavated in the FDA portion of the area in 1952 to supply construction materials for the Williams Transco pipeline that runs through the Site as shown on Figure 1-2 of the FDR. These pits were reportedly filled by Chemclene over time with discarded drums, equipment, rubbish, and soil. Subsequently, Chemclene, with oversight from the Pennsylvania Department of Environmental Protection (PADEP; formerly PADER), removed approximately 300 drums and impacted soil/debris from two excavations to a depth of approximately 15 feet over several episodes from 1981 through 1984. Remnant soil piles generated from the material removal activities exist adjacent to the excavations. The FDA is currently surrounded by an 8-foot-high chain-link fence.

The MA portion of the area is located immediately west of the FDA. Formerly, earth mounds existed as the ground surface expression of drums buried in shallow excavations and/or natural depressions. The drums were removed by Chemclene in the early 1990's and reportedly the soils were separated and returned to the excavations, leaving the MA in its current essentially flat ground surface condition (CH2MHill, 1997a).

2.0 MEASUREMENT/DATA ACQUISITION

2.1 Remedial Action Activities

This section presents a description of the Remedial Action activities as described in Sections 2.0 through 4.0 of the FDR. Specific sections of the RDWP are referenced below to avoid potential conflicts with the RDWP text:

- The soil remedy design in the FDA/MA is described in Section 2.0 of the FDR main text.
- The groundwater remedy design in the FDA/MA is described in Section 3.0 of the FDR main text.
- The soil remedy design in the MPA is described in Section 4.0 of the FDR main text.

2.2 Groundwater Monitoring Well Installation

For the Remedial Action, one additional monitoring well (well CC-11R) is to be installed at the location shown on Figure 3-2 of the FDR. The well will be installed using 8-inch temporary steel surface casing. The borehole will be advanced to the appropriate depth using 6-inch air rotary drilling techniques.

2.2.1 Well Construction

Well Screen and Casing Placement

The well casings should be secured to the well screen by flush-jointed threads and placed into the borehole and plumbed by the use of centralizers. Before the well screen and casings are placed on the bottom of the borehole, at least 6 inches of filter material should be placed at the bottom of the borehole to serve as a firm footing. The string of well screen and casings should then be placed into the borehole and plumbed.

No lubricating oils or grease should be used on casing threads. Teflon tape can be used to wrap the threads to insure a tight fit and minimize leakage. No glue of any type should be used to secure casing joints. Teflon "O" rings can also be used to insure a tight fit and minimize leakage; however, "O" rings made of other materials are not acceptable.

Filter Pack Placement

When placing the filter pack into the borehole, a minimum of 6 inches of the filter pack material should be placed under the bottom of the well screen to provide a firm footing and an unrestricted flow under the screened area. A No. 1 silica sand will be used and should extend a minimum of 3 feet above the top of the well screen. An additional 2 feet of #00 silica sand should be placed on top of the No. 1 sand prior to grouting. The filter pack should be placed by the tremie or positive displacement method or by "pouring".

Bentonite Seal Placement

Above the layer of fine sand, a 2 foot thick layer of ¼ inch bentonite pellets will be placed by gravity. Care should be taken to prevent the pellets from bridging within the annulus.

Grouting the Annular Space

The annular space between the casing and the borehole wall should be filled with a cement/bentonite grout.

The grout should be placed into the borehole, by the tremie method, from the top of the bentonite seal to within 2 feet of the ground surface or below the frostline, whichever is greater. The tremie tube should have a side discharge port to minimize damage to the filter pack during grout placement. The grout should be allowed to cure for a minimum of 12 hours before the concrete surface pad is installed.

Cement grouts should be mixed using 6.5 to 7 gallons of water per 94-lb bag of Type 1 Portland cement. The addition of bentonite (5 to 10 percent) to the cement grout is generally used to delay the "setting" time and may not be needed in all applications. Any other types of cement and/or grout proposed should be evaluated on a case by case basis by a senior field geologist.

Above Ground Riser Pipe and Outer Protective Casing

The well casing, when installed and grouted, should extend above the ground surface a minimum of 2.5 feet. A vent hole should be drilled into the top of the well casing cap to permit pressure equalization, if applicable. An outer protective casing should be installed into the borehole after the annular grout has cured for at least 24 hours. The outer protective casing should be of steel

construction with a locking cap. Generally, outer protective casings used over 2-inch well casings are 4 inches square (or round) by 5 feet long. For double cased wells, the outer casing (set 1 foot into bedrock) may be extended above ground surface and fitted with a locking lid. All protective casings should have sufficient clearance around the inner well casings, so that the outer protective casings will not come into contact with the inner well casings after installation. The protective casings should have a minimum of two weep holes for drainage. These weep holes should be a minimum 1/4-inch in diameter and drilled into the protective casings just above the top of the concrete surface pads to prevent water from standing inside of the protective casings. Protective casings made of aluminum or other soft metals are normally not acceptable because they are not strong enough to resist tampering. A protective casing is installed by pouring concrete into the borehole on top of the grout. The protective casing is then pushed into the wet concrete and borehole a minimum of 2 feet. Extra concrete may be needed to fill the inside of the protective casing so that the level of the concrete inside of the protective casing is at or above the level of the surface pad. The protective casing should extend approximately 3 feet above the ground surface or to a height so that the cap of the inner well casing is exposed and accessible when the protective casing is opened.

Concrete Surface Pad

A concrete surface pad should be installed around each well at the same time as the outer protective casing is being installed. The surface pad should be formed around the well casing. Concrete should be placed into the formed pad and into the borehole (on top of the grout) in one operation making a contiguous unit. The protective casing is then installed into the concrete as described above. The concrete surface pad should be 3 feet x 3 feet x 6 inches (above ground surface). Round concrete surface pads having similar dimensions are also acceptable. The finished pad should be sloped so that drainage will flow away from the protective casing and off of the pad. In addition, a minimum of 3 inches of the finished pad should be below grade or ground elevation to prevent washing and undermining by soil erosion. All locks on the outer protective casings should be keyed alike.

2.2.2 Well Construction Materials

Well construction materials are chosen based on the goals and objectives of the proposed program and the geologic conditions at the site(s). In this section, the different types of available materials will be discussed.

Well Screen and Casing Materials

It is anticipated that all well screens and casing materials utilized will be constructed of Schedule 40 PVC. The inside diameter (ID) for well screens and casings used for the site wells will be 2 inches. Screen lengths are estimated to be 10 feet for each new monitoring well. Well screen openings will be 0.010 inches.

Filter Pack Materials

The filter pack materials should consist of clean, rounded to well-rounded, hard, No. 1 and No. 00, silica sands. Filter pack materials should not be acceptable unless accompanied by proper analyses documentation.

2.2.3 Well Development

The newly completed well should not be developed for at least 24 hours after the surface pad and outer protective casing are installed. This will allow sufficient time for the well materials to cure before development procedures are initiated. The main purpose of developing new wells is to remove the residual materials remaining in the wells after installation has been completed, and to attempt to re-establish the natural hydraulic flow conditions of the formations which may have been disturbed by well construction, around the immediate vicinity of each well. A new well should be developed until the column of water in the well is free of visible sediment, and the pH, temperature, turbidity, and specific conductivity have stabilized. In most cases the above requirements can be satisfied; however, in some cases the pH, temperature, and specific conductivity may stabilize but the water remains turbid. In this case, the well may still contain well construction materials, such as drilling mud in the form of a mud cake and/or formation soils, which have not been washed out of the borehole. Excessive or thick drilling muds can, at times, be difficult to flush out of a borehole with one or two well volumes of flushing, although it is not anticipated that drilling mud will be introduced into the borehole. Continuous flushing over a period of several days may be necessary

to complete the well development for wells installed using mud rotary techniques. If the well is pumped to dryness or near dryness, the water table should be allowed to sufficiently recover (to the approximate static water level) before the next development period is initiated. Caution should be taken when using high rate pumps and/or large volume air compressors during well development because excessive high rate pumping and high air pressures can damage or destroy the well screen and filter pack. The on-Site geologist/engineer will make the decision as to the development completion of each well. All field decisions will be documented in the field log book.

The following development procedures may be used to develop the wells:

1. Pumping;
2. Compressed air (with the appropriate organic filter system);
3. Bailing;
4. Surging;
5. Backwashing ("rawhiding"); and
6. Jetting.

These well development procedures can be used, individually or in combination, in order to achieve the most effective well development procedure will be selected based on well depth, well yield, and other Site specific features. The newly installed wells will not be sampled until at least 2 weeks after the completion of well development to allow for the formation to restabilize to pre-well construction conditions. The selected development method(s) will be approved by a field geologist/hydrogeologist before any well development activities are initiated.

2.3 Aquifer Performance Testing

For the Remedial Action, it is not anticipated that any additional hydrogeologic testing will need to be conducted. However, this section describing the procedures for slug and pump-in testing has been retained in case these tests need to be conducted in the future.

2.3.1 Slug-Test Procedures

Each rising head slug test will be conducted in accordance with ASTM D4044-96. The field procedures are described briefly below:

1. The static water level will be measured using a water level probe;

2. An In-Situ TROLL™ transducer/datalogger will be lowered into the well and a data collection test will be set up to record water level fluctuations. The minimum data collection interval will be 3 seconds, and the data will be collected using a logarithmic collection interval;

3. A slug of known volume will be lowered in to the well, and the water level allowed to return to static conditions;

4. The test will be initiated by rapidly removing the slug and monitoring the recovery of the water level;

5. The test will be continued until the water level has returned to within at least 70% of the static level, or in the case of tight formations, for a period of 30 minutes; and,

6. Once a clear understanding of aquifer response is obtained, then the applicable data analysis method will be selected. The data will be then analyzed as described in the RDWP.

2.3.2 Pump-in Test Procedure

The test will be performed by injecting water from a potable water source into the well while measuring flow rate and monitoring water levels in the test well and adjacent wells with pressure transducers and data loggers. Prior to the test, a sample of the potable water source will be collected and analyzed for VOCs.

The test will include a step test followed by a 3-hour constant rate test. The flow rate for the constant rate test will be determined by performing a step injection test. The step test will be conducted using different flow rates (steps) over a short period of time (e.g., 10 to 15 minutes). The ideal constant injection rate will produce measurable responses (i.e., water level increases) in the observation wells without creating excessive mounding in the aquifer or excessive water level rise in the test well.

Following the determination of appropriate flow rate, the injection test will be initiated. Water levels will be measured on a logarithmic scale, with ten minutes being the maximum interval. In addition, manual water level measurements will be recorded in the test well and observation wells at regular intervals during the first 15 minutes of the test. Additional manual water levels

will be recorded in the test well and observation wells at regular intervals (i.e. 30 minutes) for the purpose of verifying pressure transducer calibration.

Recovery of water levels in the test well will be measured for 3 hours on the same logarithmic scale following cessation of the pump test. The recovery test data will also be used to determine the hydraulic conductivity of aquifer materials and will serve as verification of the pump-in test results.

2.4 Sampling Method Requirements/Procedures

The ultimate accuracy of any data generation begins with a sampling and measurement procedure that is well conceived and carefully implemented. The details of the sampling protocols are provided in this section, which presents the procedures with which samples will be acquired or measurements made during the execution of the project.

In general, the sampling procedures discussed below address the following items as they have been determined thus far:

- A description of the planned sampling locations for collection of soil, soil vapor, groundwater, and condensate samples;
- A description of the sampling devices and procedures to be used;
- A description of containers, procedures, reagents, etc., used for sample collection, preservation, transport and storage;
- A description of sample preservation methods;
- A discussion of the time considerations for shipping samples promptly to the laboratory;
- Examples of the custody procedures and forms (Figure E4-2);
- A description of the forms, notebooks, and procedures to be used to record sample history, sampling conditions, and analyses to be performed; and,
- A discussion of field QC checks such as field blanks, trip blanks, and field duplicates.

2.4.1 Groundwater

This section discusses the sample collection procedures to be employed and the equipment needed for collecting representative groundwater samples.

2.4.1.1 Monitoring Well Sampling

Prior to sampling, all monitoring wells will be inspected for signs of damage, tampering, and access. Sampling of all newly installed and developed wells will occur after a stabilization period of a minimum of two weeks.

Groundwater Sampling – Low Flow Purging and Sampling Using Submersible Pump

Equipment

Groundwater sampling equipment will be constructed of inert materials such as stainless steel or Teflon. Proper equipment decontamination procedures will be followed to minimize the potential for cross-contamination. The following equipment may be required:

- Grundfos Redi-Flow II submersible pump (or equivalent);
- Teflon-lined polyethylene tubing (recommended for low flow purge and sampling technique);
- Latex and/or nitrile gloves;
- Generator;
- 55-gallon drums (to containerize water);
- Field Meter(s) capable of measuring pH, specific conductance, dissolved oxygen (DO), temperature, turbidity, and oxidation-reduction potential (ORP);
- Groundwater Sample Field Information Form/COC form;
- Sample bottles and preservatives;
- Cooler with ice;
- Water level meter; and,
- Sample location map.

Procedure[1]

Prior to purging the monitoring well, a water level meter will be used to measure the depth from top of the well casing to the top of water surface to the nearest 0.01 feet. The water level meter will be cleaned prior to each measurement in accordance with the equipment decontamination procedures included in Section 2.4.7. The depth to the bottom of the existing wells will be

measured to confirm the construction details. In order to minimize potential cross-contamination and disturbance to sediments, which may have accumulated in the bottom of the well, well depth measurements will only be taken after the groundwater samples have been collected.

The monitoring wells will be purged and sampled with a stainless steel Grundfos Redi-Flo 2 submersible pump (or equivalent). The decontamination procedure for the submersible pump is described in Section 2.4.7.3. The low flow purge and sampling procedures are described below.

- The submersible pump, with dedicated Teflon lined polyethylene tubing, will be carefully lowered into the well to the midpoint of the well screen or open interval. In instances where the screened or open interval is not completely saturated, the pump will be lowered to the midpoint of the saturated interval where possible. Care will be taken to collect representative samples by placing the pump adjacent to a water-bearing zone.

- Each well will be purged at a rate of between approximately 200 and 1000 milliliters per minute. The water level in the well will be monitored during pumping, and ideally the pumping rate should equal the well recharge rate with little or no water level drawdown in the well. Best efforts should be made in order to minimize well drawdown by adjusting the flow when necessary and frequently monitoring the water level during purging. There will be at least 1 foot of water over the pump intake so there is no risk of the pump suction being broken, or entrainment of air in the sample. Record the pumping rate adjustments and depth(s) to water in the logbook.

- During purging, monitor the field parameters (temperature, pH, turbidity, specific conductance, oxidation-reduction potential (ORP), and dissolved oxygen (DO)) with a Horiba U-20 instrument (or equivalent) approximately every 5 minutes until the parameters have stabilized. Stabilization is considered achieved if pH is within +/- 0.1, conductivity is within 3%, ORP is within 10 mV, turbidity is within 10% (or is less than 50 NTU), and DO is within 10% (or within 0.1 mg/l when the DO is less than 1 mg/l), over three consecutive readings. Readings will be taken in a clean container, rinsed with distilled water prior to each use, and the monitoring instrument allowed to stabilize before collection of the next sample. The Horiba instrument takes the readings consecutively and therefore the process to record all the measurements may take longer than 5 minutes. If so, measurements will be taken as often as practicable. Measurements will be taken with a flow-through cell so that they are recorded prior to the sample being exposed to the atmosphere. All measurements will be recorded in field notebooks.

- The pump flow rate will be reduced to approximately 100 milliliters per minute during collection of samples for VOCs and appropriate gas-sensitive parameters and as high as approximately 500 milliliters per minute for other parameters depending on the well yield and turbidity of the sample. Once the field parameters have stabilized, record the final measurements and collect the samples directly from the end of the tubing. Samples

[1] The procedures to be used for sampling monitoring wells are based upon the USEPA Region II document entitled "Groundwater Sampling Procedure Low Stress Purging and Sampling" dated March 16, 1998.

for VOC and appropriate gas sensitive parameters must be collected first. The bottles will be preserved according to the specifications in the Section 2.5.2 All sample bottles will be filled by allowing the pump discharge to flow gently down the inside of the bottle with minimal turbulence. Cap each bottle as it is filled. For VOCs and appropriate gas-sensitive parameters, steps will be taken to eliminate headspace in the 40-milliliter (ml) vial. Such steps may include adding several drops of the sample to the cap before screwing on and inverting the vial once it has been filled to check for air bubbles.

- Immediately after sample collection, sample bottles will be placed on ice and maintained at approximately 4° Celsius (C). Further information on sample handling is included in Section 2.5.

- The following information will be recorded in the Groundwater Sample Field Information Form (Figure E4-3) for each monitoring well sampled:

  - Before Purging:
    - Date, time, and weather conditions;
    - Well ID;
    - PID readings taken from the well immediately after the cap is removed; and,
    - Depth to water.

  - Purging:
    - Start and end time for purging;
    - Purge method;
    - Purge rate;
    - Depth to water; and,
    - pH, ORP, temperature, specific conductance, turbidity and dissolved oxygen (every 15 minutes).

  - Sampling:
    - Start and end time for sampling;
    - Sampling method; and,
    - Pertinent observations regarding sample characteristics (turbidity, color, etc.).

- Quality-Control samples will be used to monitor sampling and laboratory performance and will include duplicates, spikes, and blanks. Quality control and quality assurance (QA/QC) procedures are described in Section 2.7.

2.4.2 Soil

2.4.2.1 EnCore(TM) Sampling Methodology for VOCs

This section describes the equipment and procedures that will be used to collect soil samples for VOC analysis.

Equipment

- PID;
- Latex and/or nitrile gloves;
- Groundwater Sample Field Information Form/COC form;
- Stainless steel knife;
- EnCore(TM) samplers and T-handle;
- Paper toweling; and
- Cooler with ice.

Sampling Methodology

Remove an individual EnCore(TM) sampler from the wrapper and attach to the T-handle. Take care to make sure that the sampler body has been securely fastened to the hollow portion of the T-handle. A "click" can be heard when the sampler has been properly placed. Remove the cap if it is attached to the body. At the desired interval of the soil sample core (either split-spoon or Geoprobe tube) selected (previously identified through field screening), quickly push the sampler into a portion of freshly exposed soil. Make sure that the sampler is full, but is not overfilled so as to prevent the cap from fitting properly. Use paper toweling to wipe off any excess soil that may have accumulated on the sides of the sampler. Put the cap over the sampler and twist to fasten cap to the body of the sampler. Fill out label and place on wrapper. Re-insert the sampler into the wrapper and seal. Immediately insert into cooler with ice. Three 5-gram EnCore(TM) samplers will be collected for each sample location. Additional devices will be used for collection of QC samples. All samplers will be kept at 4° C. If VOCs are the only parameters of interest and assuming that there is enough material, additional soil will be collected in a small jar and submitted to the laboratory for the determination of percent solids. If this is necessary, place about 10 grams of soil into a jar and ship along with the EnCore(TM) samplers.

2.4.2.2 Soil Sampling for Parameters other than VOCs

The following sections describe the equipment and procedures that will be used to collect soil samples that will be analyzed for parameters other than VOCs.

Equipment

- PID;
- latex and/or nitrile gloves;
- Groundwater Sample Field Information Form/COC form;
- Stainless steel knife;

- Stainless steel mixing bowls and spoons;
- Appropriate sample bottles; and
- Cooler with ice.

Sampling Methodology

All soil sampling will be conducted using either GeoProbe or Hollow Stem Auger with continuous split spoon technology. Regardless of the method, a core of soil from the desired depth, wrapped in a plastic sheath from GeoProbe or split spoon from Hollow Stem Auger, will be removed from the ground and split open using a decontaminated, stainless steel knife. All soil cores recovered will be field screened using a PID (surface of soil core will be slightly scored with a stainless steel knife and the PID nozzle immediately run along the scored section of the core) and samples will be collected for laboratory analysis from the 6-inch interval(s) exhibiting the highest reading on the PID. Field screening shall be performed at a location shielded from the wind. Soil that will be collected for non-VOC parameters will be placed into a stainless steel mixing bowl and homogenized. Required amounts of sample are listed in Table E4-8. The appropriate amount of soil for each parameter will be placed into sampling jars. The jars will then be labeled and put into a cooler with ice. All samples will be kept at 4° C.

2.4.3 Soil Vapor

Soil vapor samples for off-site analysis of VOCs will be collected via quick-connect fittings on the well head in 1 liter Summa® canisters. On the vacuum side of the blower, samples will be collected using an air pump to pull vapor into the bag. Summa® canisters will be collected using the vacuum within the canister to draw the sample from the wellhead through Teflon®-coated tubing and then directly into the canister. The tubing will be dedicated to each sample location.

Soil vapor samples for analysis by a Photoionization Detector (PID) will be collected in Tedlar bags first, then the sample tip of the PID will be inserted into the Tedlar bag to analyze the soil vapor sample for VOCs. On the vacuum side of the blower, an air pump will be necessary to pull the vapor into the bag. On the discharge side of the blower, the bag can be filled without using an air pump.

The following section describes the method for sampling with Summa canisters.

Summa Canister Sampling Methodology

Equipment

Sample summa canister - 1 liter summa canister provided by the laboratory and used to collect the sample. Canisters are shipped to the site pre-cleaned and certified by the laboratory.

Summa canister pressure gauge assembly – This is also provided by the laboratory. Dedicated clean sample gauge assembly for each sample summa canister consisting of a tee, a filter to prevent particulate matter from entering the canister and water trap assembly, plug and 0-30 inches of mercury (Hg) of vacuum pressure gauge. Pressure gauge assembly, including filter, is returned to the laboratory after use for cleaning.

Sample tubing – The laboratory will also provide ¼-inch OD, 5 foot long, Teflon® sample tubing. Each sample point will have dedicated sample tubing. After use the tubing is returned to the laboratory or discarded.

Purge summa canister - 1 liter summa canister provided by laboratory used as a convenient, portable source of vacuum for field purging of sample tubing prior to sample collection. The purge summa canister is field marked "Waste - Do Not Analyze" prior to use. After use, the purge summa canister is returned to the laboratory.

Field Sampling Set-up

The following sample container set-up activities will be conducted prior to initiating field sampling activities.

1. Identify the well to be sampled. Select an unused pressure gauge assembly and summa canister and label with the well ID, date, and sampler's initials. Attach the pressure gauge assembly to the sample summa canister. Verify the open end of the pressure gauge that will connect to the header assembly during sampling is tightly capped. Slowly open the canister valve and record the summa canister vacuum. The canister vacuum should be between 25-30 inches Hg vacuum. Close the canister valve.

2. Remove the cap from the tee and connect an unused length of sample tubing. The assembly is ready for collection of the sample. Place the completed sample apparatus into a lidded, weatherproof storage container for transporting to the wellhead.

Well head Sampling

The following activities will be conducted at the well head to be sampled.

1. Prior to sampling, ensure that the blower system is in operation in order to ensure that there is vapor to collect.

2. Connect the sample tubing to the sampling port at the well head. The connection of the new sample tubing to the sampling port will be made by a plastic hose connector. Verify all connections are tight to prevent the infiltration of ambient air.

3. Reduce the wellhead vacuum to below 3 inches of Hg by partially closing the downstream well head throttle valve.

4. Connect the pre-labeled, sample summa canister to be used for this well and open the valve. The vacuum in the canister will pull a vapor sample into the sample summa canister.

5. Collect sample until the gauge on the top of the sample summa canister reads between 1 and 3 inches of Hg vacuum. Close the canister valve and record the final vacuum.

6. Close the well head throttle valve.

7. Remove the sampling apparatus and replace the cover on the sampling port.

Post Sampling Activities

The following post sample activities will be conducted after sampling:

1. Disconnect the sample tubing from the summa canister. Replace the laboratory provided brass plug on the end of the summa canister valve.

2. Discard the tubing or return to the laboratory.

3. Complete sample chains of custody and pack and ship the samples to the Centre Analytical Laboratory for analysis.

2.4.4 Condensate

Condensate will normally be collected from the condensate collection tank in the SVE treatment system building. Samples will be collected by opening the sample port and letting the condensate flow slowly down the side of a 40 mL vial pre-preserved with hydrochloric acid. All aqueous VOC samples will be collected with zero headspace and will be stored and shipped in accordance with Section A.2.5.

2.4.5 Vacuum, Flow, Time, and Temperature

Vacuum, flow, temperature and time measurements will be collected directly from portable or permanently installed, in-line gauges. Readings will be recorded in dedicated field notebooks and then reduced to data tables using standard spreadsheet software. Section A.2.4.6.2 lists the reporting requirements for field measurements.

2.4.6 Field Measurement Procedures

The following sections describe procedures to be followed for collection of field measurements.

2.4.6.1 Water Level Measurements

Groundwater level measurements were collected prior to purging the well and during the low flow purge process to monitor well drawdown during the RDWP. Any water level measurements taken during the Remedial Action will also follow the procedures described in this section.

Equipment

The following equipment and materials are required to perform this procedure:

- Electronic water level meter;
- Distilled or de-ionized water;
- Groundwater Sample Groundwater Sample Field Information Form; and,
- Field notebook.

Water Level Measurement Procedure

The well identification number, measuring device type and serial number, date and time will be recorded prior to each day water level measurement are obtained. The water level meter will be decontaminated in accordance with the procedures described in Section 2.4.7 prior to each use. The water level meter will be turned on and the battery checked prior to each water level measurement. The wire will be lowered into the monitoring well and stopped at the depth where the meter indicates a completed circuit. Depth to water measurements will be made relative to an established surveyed reference point on the well casing and recorded to the nearest 0.01 foot.

Total Well Depth Measurement Procedures

The bell sounder, weighted tape, or electronic water level indicators can be used to determine the total well depth. This is accomplished by lowering the tape or cable until the weighted end is felt resting on the bottom of the well. Because of tape buoyancy and weight effects encountered in deep wells with long water columns, it may be difficult to determine when the tape end is touching the bottom of the well. Care must be taken in these situations to ensure accurate measurements. Total well depth measurements will be made relative to an established reference point on the well casing and recorded to the nearest 0.1 foot. In all instances, the instrument used to measure well depth should be decontaminated prior to and after use in accordance with the procedures outlined in Section 2.4.7.

2.4.6.2 Field Parameter Measurements

This procedure should be used to obtain representative groundwater field parameters measurements of temperature, specific conductance, pH, ORP, turbidity, and DO.

Equipment

The following equipment and materials are required to perform this procedure:

- An in-line, flow through sampling chamber;
- Calibration Standards;
- An instrument capable of measuring temperature, specific conductance, pH, ORP, turbidity, and DO;
- Groundwater Sample Groundwater Sample Field Information Form; and,
- Field notebook.

Procedure

All field measurements should be made where they are shielded from the wind and direct sunlight (if possible), away from electrical systems, motors, pumps, wires, etc. which might induce stray electrical currents in the instrument or its probe, and with the probe and calibration standards temperature equilibrated with the water to be tested. Samples for field measurements should never be filtered or preserved.

After the meter has been calibrated according to manufacturers' specifications and Section 2.8, sample measurements can be taken. Place the container to be used as the sampling chamber in

line before purging of the well begins. For groundwater samples collected using low flow purge technique, insert the instrument/probe into a flow-through cell (see Section 2.4.1.1). Position the instrument/probe so that it will measure the influent sample to the chamber. Record field parameter measurements, date, time, volume of water removed, and flow rate at uniform increments of approximately 5 minutes.

- Temperature should be recorded to the nearest 0.1 degrees Celsius;
- Specific conductance units are measured in micromhos per centimeter (µmohs/cm) or microsiemens (µS) corrected for 25°C. Results should be reported to the nearest ten (10) units for readings below 1,000 µmohs/cm @ 25°C and to the nearest one hundred (100) units for reading above 1,000 µmohs/cm @ 25°C;
- pH measurements will be recorded to the nearest 0.1 standard pH units (SU);
- Turbidity measurements will be recorded to the nearest whole number nephelometric turbidity units (NTUs);
- DO measurements will be recorded to the nearest 0.1 milligrams per liter (mg/l);
- ORP measurements will be recorded to the nearest 0.1 millivolts (mV);
- VOC vapor measurements will be recorded to the nearest 0.1 ppmv;
- Flow should be recorded in standard cubic feet per minute (SCFM);
- Vacuum should be recorded in inches of water column (in W.C.) or mercury (in Hg), depending on the location of the measuring point;
- Pressure should be recorded in pounds per square inches (psi); and
- Time will be recorded in US military time (24:00 hours).

2.4.7 Decontamination

Cleaning procedures in this section are intended for use by field personnel for cleaning sampling, drilling and other equipment in the field. Deviations from these procedures should be documented in the field records and investigative reports. Specifications for standard cleaning materials are as follows:

- Soap shall be a phosphate-free laboratory detergent such as Liquinox® or Alconox.® Use of other detergent must be justified and documented in the field logbooks and investigative reports.

- Solvent shall be pesticide-grade isopropanol. Use of a solvent other than pesticide-grade isopropanol for equipment cleaning purposes must be justified and documented in field logbooks and investigation reports.

- Tap water may be used from any municipal water treatment system. Use of an untreated potable water supply is not an acceptable substitute for tap water.
- Deionized water is tap water that has been run through a standard deionizing resin column. It is commercially available.

- Distilled water is tap water that has been distilled. It is commercially available.

- Analyte free water is tap water that has been treated with activated carbon and a standard deionizing resin column. At a minimum, the finished water should contain no constituents, above the laboratory reporting limits, that are being analyzed for as part of the PDI.

- Nitric Acid shall be trace-metal grade or better. Nitric acid used to decontaminate non-dedicated and sediment sampling equipment, shall be a 1 percent solution.

- Other solvents may be substituted for a particular purpose if required. For example, removal of concentrated waste materials may require the use of either pesticide-grade hexane or petroleum ether. After the waste material is removed, the equipment must be subjected to the standard cleaning procedure. Because these solvents are not miscible with water, the equipment must be completely dry prior to use.

Solvents, laboratory detergent, and rinse waters used to clean equipment shall not be reused during field decontamination and shall be stored in DOT-approved 55-gallon drums. These materials will be treated as Remedial Action derived waste (RADW). See Section 2.4.7.5 for proper handling and disposal of these materials.

2.4.7.1 Drilling Equipment

The procedures in this section are to be used for all non-dedicated drilling equipment, including split spoons and augers. All decontamination procedures in this section will be performed on a decontamination pad, constructed to the specifications in this section.

Decontamination Pad Specifications

Decontamination pads constructed for field cleaning of sampling and drilling equipment should meet the following minimum specifications:

- The pad should be constructed in an area known or believed to be free of surface contamination.
- Ideally, the pad should be located very close to a potable water source.
- The pad should not leak excessively.
- If possible, the pad should be constructed on a level, paved surface and should facilitate the removal of wastewater. This may be accomplished by either constructing the pad with one corner lower than the rest, or by creating a sump or pit in one corner or along one side. Any sump or pit should also be lined.
- Water should be removed from the decontamination pad frequently.
- A temporary pad should be lined with a water impermeable material with no seams within the pad. This material should be either easily replaced (disposable) or repairable.

At the completion of site activities, the decontamination pad should be deactivated. The pit or sump should be backfilled with the appropriate material designated by the site project leader, but only after all waste/rinse water has been pumped into a tank for subsequent treatment and release (see Section 2.4.7.5). No solvent rinsates will be placed in the pit. Solvent rinsates should be collected in separate containers for proper disposal.

Decontamination Procedures

1. Clean with tap water and soap using a brush to remove obvious particulate matter and surface films;
2. Rinse thoroughly with tap water; and,
3. Rinse thoroughly with deionized or stilled water. If deionized or stilled water is not available, equipment should be allowed to completely dry.

2.4.7.2 Sampling Equipment

The procedures in this section are to be used for all non-dedicated sampling equipment used to collect and/or homogenize groundwater and solid samples.

1. Clean with tap water and soap using a brush to remove obvious particulate matter and surface films;
2. Rinse thoroughly with tap water;
3. Rinse thoroughly with deionized or distilled water;
4. Rinse thoroughly with solvent. Do not solvent rinse PVC or plastic items;
5. Rinse thoroughly with analyte free water. If analyte free water is not available, equipment should be allowed to completely dry;
6. Rinse with dilute (1 percent) trace-metal analysis nitric acid if metal analysis will be performed;
7. Rinse with analyte free water; and
8. Equipment should be wrapped in aluminum foil until needed for sampling.

For vapor sampling equipment, Summa® canisters will be cleaned and certified by the laboratory, and only new Tedlar® bags will be used. No specific decontamination procedures are necessary for collection of vapor samples.

2.4.7.3 Groundwater Sampling Equipment (Non-Dedicated Submersible Pump)

Non-dedicated groundwater sampling equipment used for the low flow purging and sampling technique (such as the submersible pump) will be decontaminated prior to sampling each well. The submersible pump will not be removed from the well between purging and sampling operations. The pump and tubing (including support cable and electrical wires that are in contact with the sample) will be decontaminated by the procedure described below. It should be noted that the outside of the pump will be decontaminated consistent with the procedure in Section 2.4.5.7. In addition, decontamination fluids will be pumped from buckets through the pump as follows:

1. Flush the pump with tap water to remove any sediment that may be trapped in the pump;

2. Flush the pump with a weak, non-phosphate detergent solution (approximately 5 gallons);

3. Flush the pump with tap water to remove all the detergent solution. Generous amounts of tap water (at least 3 pump volumes) should be used to ensure that detergent and any sediment that may be trapped in the pump does not remain in the pump;

4. Flush the pump with deionized or distilled water;

5. Flush the pump with isopropyl alcohol. Use sparingly to minimize presence of this decontamination fluid in the samples; and,

6. Flush the pump with analyte free water. Generous amounts of water (at least three pump volumes) should be used to remove as much of the isopropyl alcohol as practical.

2.4.7.4 pH, ORP, Temperature, Specific Conductance, Dissolved Oxygen, Turbidity, Depth to Water Probes, and Total Well Depth Recorders

All pH, ORP, temperature, specific conductance, DO, turbidity, and depth to water probes will be rinsed thoroughly with distilled or deionized water prior to each use.

2.4.7.5 Remedial Action Derived Waste

There will be three types of RADW generated during Remedial Action construction activities: soil, water, and PPE. Each type of RADW will be handled as described below:

Soil:

- All excess soil generated from sampling and drilling activities will be retained in 55-gallon drums and labeled as "Drill Cuttings" or placed in an appropriately sized, lined, roll-off container. Once a drum has been filled, it will be sealed, dated, and numbered, and added to a manifest which will be maintained in the Field NoteBook.

Water:

- All monitoring well development, purge water, and decontamination water will be retained in a temporary holding tank. This water will be temporarily maintained in the tank until treatment with activated carbon on-site. Treated water will be discharged to the ground surface.

PPE:

- All PPE generated during the Remedial Action will be retained in 55-gallon drums and labeled "PPE". Once a drum has been filled, it will be sealed, dated and numbered, and added to a manifest which will be maintained in the Field Log Book. At the end of the field activities, the PPE will be disposed of in accordance with all applicable state and federal regulations.

2.4.8 Field Documentation

In order to ensure that all pertinent information and data collected during the performance evaluation are documented completely and correctly, the following procedures and protocols described in the following sections will be implemented.

2.4.8.1 Field Notebooks

All information pertinent to the field investigation will be recorded in bound and numbered field notebooks. All field notes must be legible. Any errors should be crossed out with a single line and initialed. Each team member will be assigned an individual notebook. Field records should at a minimum contain the following information:

- Date;
- Project or site name;
- Time of each data entry;
- Description of work being performed that day;
- Names and affiliations of personnel at location;
- Weather conditions on site;
- Location and type of activity;
- Visual observations;
- Pertinent field data (and any other measurements);
- Serial numbers, if any, on seals, and transportation cases, and equipment;
- Name of field custodian; and,
- Photographs taken, including date, time, direction faced, description of subject or activity, sequential number of the photo and film roll number will be recorded in the field notebook.

Specific sample information will be compiled into the field notebook, Groundwater Sample Field Information Form and/or COC. All field notebooks will be standard engineering hardbound books. All field notebooks will be photocopied so that copies of field notes can be kept in appropriate project files.

2.4.8.2 Field Meters

Calibration of field meters should be documented including:

- Analysts' name;
- Date and time of calibration;
- Instrument type, model number, and serial number (if present); and,
- Manufacturer, concentration, and lot number of calibration standards which are used.

2.4.8.3 Photo-Documentation

When photographs are taken, field personnel will record time, date, site location, general direction faced, sequential number of photograph and roll number, and brief description of the subject in a field notebook. This information will be transcribed onto the back of the photographs after they have been developed.

2.4.8.4 Correspondence/Communications

Correspondence received or sent from the field office will be dated and labeled with a project filing identification number. Telephone conversations will be documented and filed.

2.4.8.5 Changes in Procedures

Major changes in sampling procedures as outlined in this SAP will be discussed with the *de maximis* Project Coordinator and approval from the USEPA Remedial Project Manager will be obtained as needed prior to implementation. Minor procedural changes will be made by the RD personnel, and if present, with the concurrence of the on-site USEPA representative. Changes will be documented in the field notebooks.

2.5 Sample Handling and Custody Requirements

2.5.1 Sample Handling

The laboratory supplies appropriately prepared sample containers. Reagents, preservation procedures and analytical holding times will be in accordance with the published analytical methods and USEPA Region III guidelines. Aqueous samples will be checked at each well to ensure adequate preservation.

2.5.2 Sample Preservation

The specific requirements for sample container preparation, sample preservation, and holding times, and any special sample handling requirements are listed in Tables E4-8 through E4-10. Sample containers will be kept closed until the time each set of sample containers are to be filled. After filling, the containers will be securely closed, residue wiped from the sides of the containers, and immediately placed in a cooler. Samples will be kept chilled and will generally be shipped on the day of sample collection to the laboratory if an overnight courier is being used. If the laboratory is providing courier service, the samples may be picked-up the same evening or the following morning as long as proper chain-of-custody is observed. Samples of dissimilar matrices will be packed in separate coolers, whenever possible. The following procedure should be followed to preserve environmental samples for laboratory analysis such that the integrity of the sample is maintained prior to analysis to the extent possible.

2.5.2.1 Equipment

The following equipment and materials are required for sample preservation:

- Frozen blue packs or wet ice;
- Spare sample bottles;
- Several eye droppers;
- pH test strip paper; and,
- Appropriate preservatives (i.e., HCl, HNO_3, NaOH, etc.).

2.5.2.2 Procedure

General Requirements

Sample preservation requirements are given for aqueous and soil samples in Table E4-8 and E4-9. For aqueous samples, be certain that the proper chemical preservative is added to each jar. In general, the only preservation procedure required for soil samples is cooling to 4°C immediately after collection. This temperature should be maintained for both aqueous and soil samples during storage and shipment to the laboratory. Samples collected for VOC analysis using EnCore(™) samplers will be preserved by the laboratory upon receipt in accordance with SW846 5035.

VOC Sample Preservation

- An extra aqueous VOC sample vial should be filled at each sample location to be used as a pH check. The preservation procedure for aqueous VOC samples is given below, if vials are not already pre-preserved:

  ◊ The extra sample vial will be used to determine the number of drops of HCl required to attain a pH less than 2;
  ◊ Initially, six drops of HCl should be added;
  ◊ The vial cap should be replaced and the vial inverted several times to mix the sample;
  ◊ The cap should be removed and a pH indicator strip dipped into the vial;
  ◊ The color of the strip should be compared to the color chart provided with the strips;
  ◊ Repeat the above procedure until a pH less than 2 has been attained. HCl should be added one drop at a time;
  ◊ Discard the test vial, and carefully add the same number of drops of acid to the other sample vials;
  ◊ Fill the vial with sample and place the cap such that no headspace is present in the vial;
  ◊ If the sample effervesces upon addition of the acid, the sample should be submitted to the laboratory without the addition of HCl, but it should be cooled to 4°C. The lack of preservative, and the consequent 7 day technical holding time, should be specified in the comments section of the COC;
  ◊ If the behavior of the samples at specific locations is known, then pre-preserved VOC vials may be used for sample collection; and
  ◊ If the pH of the samples is >2 for samples collected in pre-preserved VOC vials, the consequent 7 day technical holding time should be specified in the comments section of the COC along with a note about inadequate preservation.

Non-VOC Sampling Preservation

- Non-VOC aqueous samples should also be checked to assess the required amount of chemical preservation to attain the pH specified in Table E4-8.

- Separate sample bottles are not required to check pH because non-VOC sample bottles are permitted to contain headspace. The preservation procedure is given below if bottles are not already pre-preserved.

  ◊ Initially, four drops of preservative should be added;
  ◊ The cap should be replace and the bottle inverted several times to mix the sample;
  ◊ A few milliliters of sample should be poured into a separate container (e.g., an unused sample jar cap) and the pH checked using indicator paper;
  ◊ Additional preservative should be added two drops at a time and the above procedure repeated until the specified pH is attained; and,

◊ After some of the initial samples have been preserved, the sampler can increase the initial number of drops added if necessary based upon the approximate amount of sample required for other locations.

2.5.3 Sample Identification

All samples shall be adequately marked for identification from the time of collection and packaging through shipping and storage. Marking shall be on a sample label attached to the sample container. Sample identification shall include, as a minimum:

- Project name and/or code;
- Sample identification number;
- Analysis requested;
- Chemical preservatives added to the sample container;
- Sample date and time; and,
- Initials of the individual performing the sampling (samples for chemical analysis).

Each sample will be assigned a unique sample identification number to be recorded on the sample label. Each sample identification number will be recorded in the field notebook, a Groundwater Sample Groundwater Sample Field Information Form and, as applicable, on chain-of-custody documentation. Designations for sample identification numbers for this project are described below.

Equipment

- Water proof marking pen.
- Site base map with designated sampling locations.

Procedure

During sample collection, a system for assignment of sample identification (ID) numbers will be used for new sampling points to distinguish between different media and different quality control samples. For sampling points that have been sampled previously, historic IDs will be used for the sake of continuity. For primary samples from locations that have not previously been sampled, the ID shown on the FDR figures will be used. Samples from soil borings will have a prefix indicating the bottom depth interval from which the sample was collected.

For QC samples, the first digit indicates the type of QC sample, if applicable, as follows:

T	trip blank;
R	rinsate blank; and
D	field duplicate.

The second, third and fourth (or first, second or third as appropriate) character will indicate the matrix or sampling point as follows:

MW	Monitoring well
RES	Residential well
SB	Soil
VP	Vapor

The fourth and fifth character will be a sequential number.

Samples that are chosen for MS/MSD will be collected with triple volume, but the ID will remain the same as the primary sample. The sampler will note on the COC that triple volume was collected for QA/QC purposes.

2.5.4 Sample Custody

Samples are physical evidence collected from a facility or the environment. Sample data generated during this project may be used as evidence in USEPA enforcement proceedings. In support of potential litigation, COC procedures have been established to ensure sample traceability from the time of collection through completion of analysis.

The National Enforcement Investigations Center (NEIC) of USEPA considers a sample to be in custody under the following conditions:

1. It is in your possession; or
2. It is in your view after being in your possession; or
3. It was in your possession and you locked it up; or
4. It is in a designated secure area.

2.5.4.1 Field Sample Custody

All environmental samples will be handled under strict COC procedures beginning in the field. Figure E4-2 is an example COC. The field sample custodian (team leader) will be responsible for ensuring that the applicable procedures outlined in this SAP are followed. Sample custody for field activities will include the use of COC forms, sample labels, custody seals, Groundwater Sample Field Information Forms, and field notebooks. Field notebooks will be used throughout the project to document all phases of field activities. Supplies and reagents (source and lot numbers, if appropriate) used for field measurements will be recorded in the field notebooks. The following procedure should be used to maintain COC of environmental samples.

Equipment

The following equipment and materials are needed to perform COC procedures:

- Chain-of-custody forms;
- Chain-of-custody seals; and,
- A secure (locked) vehicle or building.

Procedures

- COC is usually initiated in the field by the sampling team;

- When COC is initiated at the laboratory, the laboratory personnel responsible for shipping sampling containers will have initialed and signed the COC form and sealed the shipping container with a COC seal. It is preferable for the custody seal to be signed and dated by the laboratory and to have unique serial number that is recorded on the COC by the lab. In such cases, field staff should check this information to assess the potential for tampering with sample containers prior to receipt in the field. The field staff should acknowledge receipt and container integrity by signing the COC form, and noting any discrepancies;

- Samples and sample containers must be kept under proper COC during field sampling;

- If custody of the samples (and sample bottles) is exchanged during field sampling, such transfer must be documented on the COC form. The departing field staff should sign indicating the custody has been relinquished, and the arriving field staff should sign indicating responsibility for the custody of the samples;

- Each sample bottle label should include:

  ◊ Project (site) name;
  ◊ Sample point identification number;

- ◊ Chemical preservative added to the bottle;
- ◊ Sample collection date and time, sampler's initials; and
- ◊ Analytical method to be performed.

- The COC form and Groundwater Sample Field Information Forms should include:

  - ◊ Sample identification number and matrix;
  - ◊ Project or site name or number;
  - ◊ Sampler's name or initials;
  - ◊ Sample collection date and time (military time);
  - ◊ Designation as a grab or composite sample;
  - ◊ Requested analysis;
  - ◊ Any special comments (i.e. 7 day hold time for unpreserved VOCs); and,
  - ◊ Any preservatives added to the sample.

- When shipping samples to the laboratory, all sample bottles and requested analyses should be noted on the COC form;

- Where multiple analytical methods are available for a particular analysis, the specific method number should be listed on the COC form. For example, groundwater samples for VOC analysis could be performed by USEPA Methods 601,602,624, 8260, or CLP. The specific method should be referenced;

- Any sample filtering or preservation should be noted on the COC;

- One member of the sampling team should sign the COC form relinquishing custody to the laboratory;

- If using an overnight courier service, record the tracking number on the COC;

- The COC form should be sealed inside the shipping container with the samples. The paperwork should be sealed inside a plastic bag to prevent damage from water condensation or broken bottles;

- The courier does not need to sign the COC form if it is sealed within the shipping container using custody seals;

- If the samples are hand delivered to the laboratory by field staff, the COC form should be signed at the laboratory when the samples are delivered and the shipping container does not need to be sealed as long as it is kept under proper COC until delivered to the laboratory; and,

- If possible, COC seals should be signed and dated, and the serial numbers listed on the COC form. At least two seals should be used on each shipping container.

2.5.4.2 Laboratory Custody

Once samples are transported to the analytical laboratory, custodial responsibility is transferred to the Laboratory Sample Manager to assure that the procedures presented in the laboratory's QAP and the appropriate analytical methods are followed. The laboratory QAP will contain a detailed description of the laboratory chain-of-custody procedures, including receipt of samples, designation of a sample custodian, custody within the laboratory and laboratory storage, and disposal procedures. The laboratory chosen for this project will be furnished a copy of this SAP, which has been prepared in accordance with USEPA guidelines and specifications

2.5.5 Sample Packaging and Shipment

The following procedure is to be used to enhance successful shipping of samples to the laboratory.

Equipment

The following equipment and materials are required to perform this procedure:

- Overnight courier airbills and courier phone number (if applicable);
- Fiber reinforced strapping tape or duct tape;
- Cushion material such as bubble wrap or vermiculite;
- Address labels; and,
- Laboratory's address and phone number.

Procedure

- Samples should be packed into a shipping container (usually a cooler) in a manner that will minimize potential breakage of sample bottles. This might include use of laboratory-supplied bubble wrap designed to fit the particular bottle, polystyrene chips, or vermiculite;

- If wet ice is used for preservation, make sure that it is securely placed in zip-loc bags and can not leak. If the bottles sit in standing water, the sample integrity may be compromised;

- The sample containers must contain enough frozen blue ice packs or wet ice to maintain a temperature of 4°C during transport to the laboratory;

- If aqueous VOC samples are being shipped, be sure that a trip blank has been included;

- If applicable, record the courier tracking number on the COC form; and,
- Samples must be shipped to the laboratory within 24 hours of collection.

2.6 Analytical Method Requirements

Most samples collected during this project will be analyzed by analytical methods from the following documents:

- Test Methods for Evaluating Solid Waste - Physical/Chemical Methods, SW-846, Third Edition, November 1986; Update IIIA, November 2000;
- Standard Methods for the Examination of Water and Wastewater, 18th edition, 1992, APHA-AWWA-WPCF;
- Methods for Chemical Analysis of Water and Wastes (EPA-600/4-79-020), USEPA, 1979, revised 1983.; and,
- Annual Book of ASTM Standards, Volume 4.08, April 1999.

Method references for the analyses to be performed for this project are summarized in Tables E4-3, E4-5 and E4-7. These chosen methods are deemed suitable for achieving the project DQOs. Information regarding the laboratory's equipment and capability in performing the analytical methodologies will be provided in the laboratory QAP.

2.7 Quality Control Requirements

This section describes the various QA/QC samples that will be collected in the field and analyzed in the laboratory and the frequency at which they will be performed. QA/QC samples which will be collected will consist of trip blanks, field blanks, field duplicates, and matrix spike/matrix spike duplicates (MS/MSD). These QA/QC samples are described briefly in the following sections.

2.7.1 Trip Blanks

Trip blanks will be collected for VOC analysis at a frequency of one per day of sampling for aqueous VOCs. The trip blanks must be placed in each cooler containing VOCs. In order to avoid collection and analysis of an excessive number of QC samples, the sampling team should

endeavor to pack all VOC vials in one cooler. Trip blanks are prepared by the laboratory using lab-pure water; the laboratory should add the appropriate chemical preservative to the prepared trip blank vials. The trip blank vials travel to the Site with the sample bottles. The trip blank vials are carried along while sampling, then submitted to the laboratory for analysis with the aqueous samples.

2.7.2 Field Rinsate Blanks

Field rinsate blanks will be collected for all required analyses at a frequency of one per twenty primary samples per matrix where non-dedicated equipment is used. Field rinsate blanks are prepared in the field using lab supplied analyte free water. The water is poured over and through each type of sampling equipment and submitted to the laboratory for analysis of target analytes.

2.7.3 Field Duplicates

Field duplicates will be collected for all required analyses at a frequency of one per 20 primary samples per matrix. Field duplicates are collected by sampling the same location twice, but the field duplicate is assigned a unique sample identification number (see Section 2.5.3).

2.7.4 MS/MSD

MS/MSD samples (MS/lab duplicates for some inorganic parameters) will be collected for all required analyses at a frequency of one per 20 primary samples per matrix. Additional sample volume is collected from a location and submitted to the laboratory for analysis. The laboratory will use the additional volume to prepare spiked samples to assess accuracy and precision.

2.7.5 Internal QC Samples

Internal QC checks have been developed to help ensure accuracy and precision during field sampling and measurement as well as laboratory analysis. Field checks will be performed regularly. Laboratory QC checks will be performed in accordance with the specific analytical methods.

Field measurements will be made in duplicate at a frequency of one in twenty measurements taken. These duplicate measurements must agree $\pm$20 percent. If the duplicate measurements do not meet

this criterion, the instrument will be recalibrated and the measurements will be retaken. All field measurements will be recorded in the field notebooks or Groundwater Sample Field Information Forms and later entered into summary tables.

The laboratory will have an established quality control check program utilizing procedural (method) blanks, laboratory control spikes, matrix spikes, and duplicates. Details of the internal QC checks utilized by the laboratory will be found in the laboratory QAP and the published analytical methods. Laboratory QC samples will be analyzed at a frequency of one per twenty analytical samples or at a frequency dictated by the methods. These QC samples will be used to determine if results may have been affected by field activities or procedures used in sample transportation or if matrix interferences are an issue. Assessment of laboratory QC will take into account the PARCC criteria specified for this project as shown in Tables E4-3 through E4-7. The individual methods and Section 4 of this SAP discuss procedures to be used to calculate QC data.

Split samples may be collected by a USEPA contractor during the project. These samples will be collected separately and analyzed by a laboratory other than the laboratory identified for this project at a later time. Comparison of the split sample results will demonstrate how well the results reported by two different laboratories are replicated. The comparison will be expressed in terms of precision using the relative percent difference calculations shown in Section 4.

2.8 Instrument/Equipment Testing, Inspection, and Maintenance Requirements

Preventive maintenance of equipment is essential if project resources are to be utilized in a cost-effective manner. Preventive maintenance will ensure accuracy of measurement systems, minimize downtime, and provide inventory control of critical spare parts, back up systems, and other necessary equipment. The field sampling team will maintain an inventory of replacement parts for field instruments, and will routinely perform preventive maintenance or repair. Spare parts that often require replacement will be kept on hand at the Site during field activities. The preventive maintenance approach for equipment used in field for sampling, monitoring, and testing includes checking batteries and electrodes, checking condition of meters, checking sample bottles for cleanliness and breakage, and ensuring that a reasonable supply of bottles, batteries, probes, calibration solution, and supplies are on-hand to avoid unnecessary delays in the field.

Preventive maintenance of laboratory equipment and hardware will be described in specific sections of the laboratory QAP. More than one instrument is generally available for each type of analysis in case the initial instrument malfunctions or does not meet the required measurement criteria. Laboratory personnel or qualified manufacturer representatives will perform preventive maintenance and repair. The laboratory will retain logbooks documenting preventative maintenance and repair for each instrument.

2.9 Instrument Calibration and Frequency

2.9.1 Field Calibration

The calibration and maintenance of field equipment will be the responsibility of the field sampling team. Field instruments, such as meters for measuring field parameters, will be standardized/ calibrated in accordance with the manufacturers' recommendations against NBS traceable standards, where appropriate. During sampling, calibration will occur at a minimum of twice a day (beginning of each day and at least every four hours of operation). Duplicate field measurements will be performed at a frequency of once per twenty samples. Tables E4-3, E4-5 and E4-7 provide precision criteria for field precision measurements. Appropriate calibration records will be maintained in project field notebooks or Groundwater Sample Field Information Forms. The field team leader is responsible for ensuring that calibrations are properly performed at the appropriate frequency.

2.9.1.1 Photovac Microtip Photoionization Detector and Photovac MicroFid Flame Ionization Detector

A Photovac Microtip (or equivalent) will be used for screening soil samples collected during the soil boring program and monitor the VOC content of soil vapor samples once the SVE treatment system is started. The Photovac Microtip is a microprocessor controlled photoionization detector (PID). The instrument normally operates with a 10.6 electron Volt (eV) lamp, however 8.4, 9.5, 10.2 and 11.7 eV lamps are available as options. The detector is capable of measuring concentrations down to about 1 ppm sensitivity for certain compounds. The results of the PDI indicate that the surface and subsurface soils contain various concentrations of VOCs, which are identified as the Compounds of Potential Concern (COPC) in the ROD. The volatile COPCs are a mix of single and double-bonded compounds that have ionization potentials (IP) that range from 9.24 to 11.67. Therefore, a 11.7 eV lamp will be used on the PID. Since the 11.7 eV lamps burn

out more quickly than the lower powered bulbs (i.e., the 8.4, 9.5, 10.2 and 10.6 eV ones), field personnel will carry a replacement bulb.

It is important to realize that some compounds will exhibit a very low response on the PID in relation to their actual concentrations. The PID cannot be used to identify unknown substances, it can only quantify/estimate them. Winds and high humidity will affect measurement readings. Foggy or high humidity conditions can cause condensation on the lamp, thus affecting measurements.

As a general rule, the PID should not be used to monitor for low molecular weight hydrocarbon compounds whose structures contain only single bonds (methane, ethane, pentane, hexane, heptane, carbon tetrachloride, and hydrogen sulfide). The PID should be used to detect: aromatics such as benzene, toluene, and styrene; aliphatic amines such as diethylamine; and chlorinated unsaturated compounds such as vinyl chloride and trichloroethene.

In order to obtain more sensitive readings, a Photovac MicroFID Flame Ionization Detector (or equivalent) will also be used for screening soil samples collected during the soil boring program and monitor the VOC content of soil vapor samples once the SVE treatment system is started. The Photovac MicroFID is a microprocessor controlled FID. The detector is calibrated with methane and has a detection limit of 0.5 ppm.

The instrument will be calibrated before each use in accordance with the manufacturer's instructions. The unit is operated on a Window's®-based software package which prompts the user at each step.

2.9.1.2 pH/ ORP/Temperature/Conductivity/Turbidity/Dissolved Oxygen Meter

Calibration is performed in accordance with the manufacturer's specifications. Calibration is performed at the beginning of each day and at least every four hours during sampling. The following information is documented in the field notebook:

- Date and time;
- Meter identification (make, model, serial number);
- Calibration results including source and lot number of standards; and,
- Initials.

2.9.2 Laboratory Calibration

Instrumentation calibration procedures are established in manufacturer's specifications and in the analytical methodologies. Trained personnel, using the approved written procedures, will perform instrument calibration. Calibration procedures and frequency will be described in the laboratory's QAP and in the specific analytical methodologies. These instruments include GC/MS, ICPs, analytical balances, syringes, thermometers, etc.

All sample results should be within the calibration range of the instrument. Samples which do not contain concentrations of target analytes that exceed the instrument calibration range should be analyzed undiluted to achieve the lowest possible reporting limits. However, samples containing elevated levels of target analytes cannot be analyzed undiluted because the calibration range of the method would be exceeded. Such samples will require analysis at dilutions which would result in elevated reporting limits.

The major chemical analytical equipment used for this project will be described in the laboratory QAP and the individual analytical methods. A laboratory QAP will provide information regarding types of equipment used by the laboratory facility. Calibration procedures will follow published analytical methodologies. The laboratory QAP will reference the specific methodologies or laboratory standard operating procedures (SOPs) for calibration procedures. The laboratory will document sources for calibration material; for example, USEPA repository, NBS, Supelco© or equivalent. The laboratory QAP will describe traceability of all stock solutions and working standards back to the neat materials. The laboratory QAP will also describe the procedures used to document equipment repair and maintenance.

2.10 Inspection/Acceptance Requirements for Supplies and Consumables

All sampling equipment will be inspected prior to use to ensure proper operation and create a safe working environment. The laboratory chosen for this project will have preventative maintenance and health and safety programs to ensure proper execution of project work.

2.11 Data Acquisition Measurements (non-direct measurements)

Non-direct means of data acquisition refers to the use of non-measurement sources such as computer databases, spreadsheets, programs and literature files. To ensure confidence in the data generated from these sources, computer programs used for this project will be within the public domain and, as such, accepted by the industry. Historical data generated from samples collected and analyzed with approved USEPA methodologies will be used to scope the elements of the Remedial Action. Only data that have been evaluated and/or validated or accepted into the project record by USEPA will be used to determine the nature and extent of contamination. Validated data will be accepted on their merit. Professional judgement must be used, however, as necessary and appropriate to disregard any of the data generated from previous sampling events.

Any literature references used to scope the RD must have been through the peer review process and/or have been published in periodicals commonly known to the environmental industry. References that have not been substantiated in this way will be deemed unreliable and will not be used.

2.12 Data Management

Data collection during this project will be retained in both hardcopy and electronic format. Data collected in the field will be transcribed from field forms or notebooks and tabulated, as appropriate, using a spreadsheet or database program. Data entry will be checked to ensure no transcription errors occurred. Tabulated data will be provided in the Remedial Action Construction Completion Report.

Analytical data packages from the laboratory will contain the information listed in Section 1.6. Electronic files containing the analytical results will be provided by the laboratory and down loaded into the project database. Any qualifiers resulting from data validation will also be entered into the database. Database entries will be checked for correctness and completeness. The performance monitoring report will contain the tabulated analytical results.

3.0 ASSESSMENT/OVERSIGHT

3.1 Assessments and Response Actions

Performance of activities or procedures will be the responsibility of the personnel performing such activities and procedures. For field measurements, the field team leader will be responsible for performance while the analyst and sample custodian will be responsible for performance within the laboratory. The performance of activities or procedures must comply with those specified in this SAP. The responsible personnel must be prepared to justify that the specified procedure or reference method was implemented properly. Deviations of a technical procedure or reference method must be noted within the appropriate logbook and, for laboratory analyses, in the Case Narrative of the analytical report.

Performance will be monitored in the field through the use of QC checks as previously discussed in Section 2.7. Performance will be monitored in the laboratory through the use of QC checks discussed in the laboratory QAP and the PARCC criteria presented on Tables E4-3 through E4-7.

As described in the guidance documents, assessment includes surveillance, peer review, management systems review, readiness review, technical systems audit, performance evaluation, data quality audit, and data quality assessment. For performance monitoring, the following assessment activities are planned:

- Surveillance;
- Peer review;
- Technical systems audit; and,
- Data quality assessment

3.1.1 Surveillance

During the course of sample collection, it is anticipated that the Agencies will provide oversight services for specific activities. This oversight will be geared to ensuring that sampling procedures and activities discussed in the SAP are properly executed. CSDG assumes that the Agencies will provide feedback to the sampling team, CSDG, *de maximis*, and RAC regarding any issues arising from oversight.

3.1.2 Peer Review

Throughout the project, the RAC will maintain a system of peer review by which data generated can be checked and verified. Data that is transcribed and tabulated will be checked for accuracy and completeness.

3.1.3 Audits

The QA/QC audit is an independent systematic on-site review of facilities, equipment, training procedures, record keeping, data validation, data management, and reporting aspects of the field and laboratory QA/QC program. Audits may be performed on field operations and sampling procedures, laboratory analyses and documentation.

3.1.3.1 Field/Sampling Audit

The RAC field team leader will be responsible for ensuring that the applicable quality assurance procedures described in this SAP are followed. An on-Site Agency representative may audit field activities, with respect to the technical requirements, procedures, and protocols established in the SAP. Activities that may be audited are described below.

- Field sampling activities;
- Documentation of activities (logbooks, etc.);
- Equipment decontamination;
- Use of proper sampling equipment;
- Proper sample identification;
- Sample preservation;
- Sample packaging;
- Sample shipment; and,
- Chain-of-custody.

3.1.3.2 Laboratory Audits

The laboratory is expected to have a QA program whereby the QA department will routinely conduct internal audits. The laboratory QAP will discuss internal laboratory audits. If an external audit is deemed necessary by the Agencies, then the Agencies will consult with CSDG and the RAC regarding an appropriate approach.

3.1.4 Data Quality Assessment

Analytical data will be assessed through a series of evaluation procedures, including comparing the analytical results to the ROD performance criteria.. The target analytes and associated laboratory reporting limits are provided in Table E4-11. The details regarding data evaluation and validation are discussed in Section 4.0.

3.1.5 Corrective Actions

If through the data assessment process problems are identified, corrective actions will be initiated. All identified QA problems and corrective actions will be documented to provide a complete record of QA activities and help identify needed long-term corrective actions. The need for corrective action is based upon predetermined limits of acceptability for all aspects of data collection and measurement, such as PARCC criteria (Tables E4-3 through E4-7), historical data, laboratory control spike sample results, and experience using the analytical procedures. Following standard QA/QC procedures will help detect erroneous data. The need for corrective action may be determined by the samplers, analysts, supervisors, quality assurance personnel, laboratory managers or Project Managers.

The detection of system and performance problems and the corrective actions procedures used in the field during monitoring and sample collection will be documented in the field notebooks or Groundwater Sample Field Information Forms with copies placed in the RAC's project files. Any problems that cannot be resolved by the sampler or Field Sampling Team Leader will be brought to the attention of the RAC's Project Manager. The RAC's Project Manager, *de maximis* Project Coordinator, and USEPA Project Manager (if necessary) will determine the corrective action to be taken, if any.

The laboratory QAP will describe the Corrective Action procedures and documentation used by the laboratory. Any problems which cannot be resolved by the analysts, laboratory managers or laboratory quality assurance officers will be brought to the attention of the RAC's Project Manager and Project Quality Assurance Officer (QAO). The RAC's Project Manager, *de maximis* Project Coordinator, and USEPA Project Manager (if necessary) will determine the corrective action to be taken, if any.

The laboratory personnel will assess laboratory QC samples and re-analyze stored samples that do not meet QC criteria prior to expiration of hold times. Corrective actions may include re-analysis, or resampling and analysis. Laboratory personnel will use corrective action reporting forms to document identification and resolution of significant defects. These report forms will be kept on file in the laboratory QA files.

If a system or performance audit identifies a situation requiring corrective action, the corrective action will be initiated upon approval of the responsible supervisor. Documentation of corrective actions will be made in a report to the RAC's Project Manager. Corrective actions will be reported as appropriate to the Project QAO, *de maximis* Project Coordinator, and, if necessary, the USEPA QAO and Region III Remedial Project Manager.

3.2 Reports to Management

Timely Quality Assurance reports are necessary to the successful completion of this project. Quality assurance deficiencies in the field must be reported to the field team leader and the Supervising Contractor QA and project managers. Quality assurance deficiencies in the laboratory must be reported in a timely manner to laboratory and project management personnel. The laboratory's policies and procedures for reporting quality assurance activities to management will be included in their QAP and/or SOPs. Corrective actions for field and laboratory activities will be reported to the RAC's QAO and Project Manager, CSDG Project Coordinator, and, if necessary, the USEPA QAO and Region III Project Manager.

In accordance with the Consent Decree, monthly progress reports will be provided to *de maximis* for submittal to USEPA and PADEP which will include summary of actions taken to achieve compliance with the Consent Decree, including a summary of results of sampling and tests; identification of plans and deliverables submitted to the Agencies; description of problems encountered and any corrective actions taken during the preceding month; a description of data gathering and other activities planned for the upcoming months; and any modifications to work plans or schedules. All monthly progress reports will be submitted to USEPA as one paper copy and one electronic copy. Any changes which need to be made to the Plan will be noted in the progress report. Prior to initiation and implementation, these changes will be discussed with the USEPA Remedial Project Manager.

4.0 DATA VALIDATION AND USABILITY

4.1 Data Review, Validation, and Verification Requirements

Accurate data reduction, validation and reporting methods will support decision analysis. Data reduction techniques for both field and laboratory activities are described in this section. In addition, the laboratory chosen for this project will have further data reduction, validation and reporting procedures which will be described in the laboratory QAP or SOPs.

In general, data reduction of field measurements will not be necessary because all readings will be recorded in field notebooks or Groundwater Sample Field Information Forms directly from the field instruments. If any reduction of data is necessary because units of measurement are not comparable (e.g., Fahrenheit vs. Celsius), then these conversions will be performed in the office using standard spreadsheet software or hand calculations. Field measurements will be tabulated using spreadsheet or data base software.

The laboratory will perform data reduction in accordance with the individual analytical methodologies used for this project. The laboratory QAP or SOPs will have more detailed information regarding the laboratory data reduction procedures.

The laboratory will attempt to achieve the target reporting limits and units for each parameter of interest as provided in the analytical methods. The equations and procedures used to calculate concentrations are specified in the individual methodologies (refer to Tables E4-3, E4-5 and E4-7 for method numbers and references). Given the conditions under which samples will be collected and analyzed, the laboratory may not always be able to achieve the target reporting limits. For example, due to insufficient sample volume or elevated concentrations of target compounds, the samples may be diluted prior to analysis, thereby elevating the reporting limits. The laboratory will provide a narrative in the data package to explain the reasons for elevated reporting limits.

Assessment of accuracy, precision and completeness of both field and laboratory measurements is based upon the acceptable results from QC samples. Where appropriate these may include blanks, duplicate samples, laboratory control spiked samples or matrix spike/matrix spike duplicate samples.

Method, field/rinsate, and trip blanks are expected not to contain any target analytes with concentrations greater than the reported detection limit with the possible exception of common laboratory contaminants (i.e., methylene chloride, acetone, and 2-butanone,).

Field and laboratory duplicate results are assessed based upon relative percent difference (RPD) between values, using the following equation:

$$RPD = \frac{(D1 - D2)}{(D1 + D2)/2} \times 100\%$$

where, D1 = Primary sample result; and,
D2 = Duplicate sample result.

Laboratory control spiked samples are assessed based upon the percent recovery (%R) of spiked analytes. The percent recovery is calculated using the following equation:

$$\%R = \frac{X}{TV} \times 100\%$$

where, X = observed value of measurement; and,
TV = "true" value of spiked analyte.

Matrix spike/matrix spike duplicate (MS/MSD) data are assessed based upon the percent recovery of spiked analytes using the following equation:

$$\%R = \frac{(SSR - SR)}{SA} \times 100\%$$

where, SSR = Spiked sample result for analyte x;
SR = Sample result for analyte x; and,
SA = Spike added of analyte x.

The relative percent difference between the MS/MSD results is calculated using the RPD equation presented above.

Data completeness is assessed based upon the amount of valid data obtained from a particular measurement system (sampling and analysis). It may be quantitatively expressed using the following equation:

$$\text{Completeness} = \frac{N1}{N2} \times 100\%$$

where, N1 = number of valid measurements obtained; and,
N2 = number of valid measurements expected.

The laboratory will assess all quality control data with regard to precision and accuracy. Corrective actions are initiated as necessary.

4.2 Data Validation and Verification Methods

4.2.1 Data Validation

Data validation techniques include screening, accepting, rejecting or qualifying data on the basis of specific quality control criteria for holding times, calibration, blank results, spike results, surrogates, and field duplicates. Data validation is a process whereby erroneous data may be identified prior to entering the project record. Validation of field measurements will be performed by field personnel in consultation with technical supervisors. Field personnel will validate the field data through review of calibration and duplicate data readings. The data will be reviewed to determine if there are any anomalous readings. Anomalies will be resolved immediately by means such as re-calibration or re-acquisition of the measurement.

For all analytical samples associated with this project, the laboratory will produce data packages that will contain all information needed for formal validation of the data. The data to be collected in the various programs are related to the pre-design activities of the Remedial Design. All data will undergo a data evaluation process by which accuracy, precision and completeness are assessed.

The data will be evaluated based upon holding times, blank results, and QC results assessing accuracy and precision. All analytical data packages will be reviewed for completeness and QC summaries will be evaluated. All data review required for this project will be performed under the direction of the data validation specialist identified in Table E4-1.

If, based upon this data review, the validation specialist believes that a more extensive data validation should be performed, then a subset of the data will undergo full data validation. Data validation will be performed using the guidelines cited in Section 1.1 and the specific analytical

methodologies or SOPs. Precision, accuracy, representativeness, comparability, and completeness will be evaluated based upon field sampling documentation, adherence to sample hold times, and analysis of QC samples (field duplicates, laboratory spikes and laboratory blanks). PARCC criteria are specified in Tables E4-3 through E4-7. Qualifiers will be applied to the data by the data validator using the logic specified in the validation guidelines cited in Section 1.1.

Qualified results will be reported for all validated samples on the analytical reporting forms provided in the data packages or as data summary tables accompanying the laboratory deliverable package. Qualified results, data packages and analytical results will be stored in the Supervising Contractor's project files and will also be entered into the Supervising Contractor's project database.

The PARCC criteria and criteria specified in applicable guidelines may not always be achievable. The data validation guidelines provide directions for the determination of data usability. Qualified data can often provide useful information, although the degree of certainty associated with the result may not be as planned. Professional judgment, in conjunction with USEPA guidance documents, will be used to determine data usability.

4.2.2 Data Reporting

Field measurements recorded during field activities will be tabulated using standard spreadsheet or database software. The resulting summary tables will be reviewed and verified and data will be provided in the Construction Completion Report.

Laboratory data will be reported by the laboratory in a validatable package. Data summary tables containing the reviewed data will be prepared and these tables will be provided in the Construction Completion Report.

4.3 Reconciliation With User Requirements

Throughout the performance monitoring program, the RAC will determine if project DQOs are being met and assess whether the data being collected is sufficient and appropriate. Periodic evaluations of the monitoring program will be made to determine if a change in frequency or

analytical parameters is appropriate. Individuals making measurements throughout the process will also make assessments of whether the DQOs are being met.

Individuals making field measurements will determine whether or not field quality control criteria were met. The field QA/QC will be overseen by the field team leader. Corrective actions will be initiated in the field as necessary. This corrective action may include recalibration of instruments, obtaining a replacement instrument, or use of a different type of instrument.

The analysts in the laboratory will determine if analytical QC criteria are achieved. Corrective action in the form of re-analysis or re-calibration may be warranted. Laboratory analytical data and field data will be assessed by a data validation specialist under the direction of the person identified in Table E4-1 to determine usability with regard to the DQOs. As mentioned, USEPA Region III guidelines, individual methodologies and SOPs and the PARCC criteria presented on Tables E4-3 through E4-7 will be used to evaluate all data deliverables.

As noted in the data validation guidelines, data may not always meet precision and accuracy requirements but may still be considered usable. The data will be assessed with regard to the project DQOs, and professional judgment used in conjunction with guidance documents will determine data usability.

TABLE E4-1
PROJECT PERSONNEL
MALVERN TCE SUPERFUND SITE
SAMPLING AND ANALYSIS PLAN

USEPA Remedial Project Manager:	James Harper USEPA Region III 1650 Arch Street Philadelphia, PA 19103-2029 Telephone: (215) 814-3195 Facsimile: (215) 814-3001
USEPA Technical Oversight Contractor:	Mary Jo Apakian CDM Federal 993 Old Eagle School Road, Suite 408 Wayne, PA 19087 Telephone: (610) 293-0450 Facsimile: (610) 293-1920
PADEP Project Manager:	April Flipse PADEP - Southeast Region 2 East Main Street Norristown, PA 19401 Telephone: (484) 250-5900 Facsimile: (484) 250-5961
Chemclene Site Defense Group:	Mark Stevens, Esq. Langsam, Stevens & Morris 1616 Walnut Street, Suite 812 Philadelphia, PA 19103 Telephone: (215) 732-3255 Facsimile: (215) 732-3260
de maximis Project Coordinator:	Christopher R. Young *de maximis, inc.* 1125 S. Cedar Crest Boulevard, Suite 202 Allentown, PA 18103 Telephone: (610) 435-1151 Facsimile: (610) 435-8459
Remedial Designer Project Manager:	Brian J. Eichlin Golder Associates Inc 1951 Old Cuthbert Road, Suite 301 Cherry Hill, NJ 08034 Telephone: (856) 616-8166 Facsimile: (856) 616-1874

TABLE E4-1
PROJECT PERSONNEL
MALVERN TCE SUPERFUND SITE
SAMPLING AND ANALYSIS PLAN

Remedial Action Contractor Project Manager:	To be Determined
Remedial Action Contractor and Site Health and Safety Officer:	To be Determined
Remedial Designer Quality Assurance Officer:	To Be Determined Golder Associates Inc 1951 Old Cuthbert Road, Suite 301 Cherry Hill, NJ 08034 Telephone: (856) 616-8166 Facsimile: (856) 616-1874
Remedial Designer Laboratory Coordinator and Data Validator:	Julie Lehrman Golder Associates Inc 1951 Old Cuthbert Road, Suite 301 Cherry Hill, NJ 08034 Telephone: (856) 616-8166 Facsimile: (856) 616-1874
Laboratory Project Manager: Alternate Laboratory Project Manager:	Rodney Raimonde Marlene Swift CompuChem 501 Madison Ave Cary, NC 27513 Telephone: (919) 379-4011 Facsimile: (919) 379-4040
Laboratory Quality Assurance Director: Laboratory Quality Assurance Manager:	Robert Meierer CompuChem 501 Madison Ave Cary, NC 27513 Telephone: (919) 379-4004 Facsimile: (919) 379-4040

TABLE E4-2
PROPOSED SAMPLING PLAN AND DATA QUALITY OBJECTIVES FOR REMEDIAL ACTION
MALVERN TCE SUPERFUND SITE
SAMPLING AND ANALYSIS PLAN

Remedial Activity	Site Area	Matrix	Number of Samples	Parameters of Interest	Frequency of Monitoring	Purpose/Objective of Activity
Characterization of Exisiting Roll Off	FDA/MA	Soil	1 per 25 cu. yds	TCLP VOCs and field parameters[4]	Once	Collect definitive data to characterize Soil and debris in existing roll-off to determine appropriate disposal method
			1 per 25 cu. yds	TCLP PCBs	Once	
Soil Excavation	FDA	Soil	1 per 25 cu. yds	TCLP VOCs and field parameters[4]	Once	Collect definitive data to characterize excavated soil in FDA to determine appropriate disposal method
			1 per 25 cu. yds	TCLP PCBs	Once	
Soil Excavation	FDA	Soil	1 per 10 cu. yds	TCLP VOCs and field parameters[4]	Once	Collect definitive data to characterize excavated soil in FDA to determine if soil can be reused on-site as clean fill
			1 per 10 cu. yds	TCLP PCBs	Once	
Dewater Excavation Pits	FDA	Surface water	1 (minimum)	TCL VOCs[4]	Once	Collect definitive data to characterize removed surface water from excavation pits to determine appropriate disposal method
SVE Well Installation	FDA/MA	Soil	1 per well	TCL VOCs and field parameters	Once	Collect definitive data to delineate extent of VOC contamination
Monitored Natural Attenuation Network	FDA/MA	Groundwater	1 per well	TCL VOCs, NAPs, and field parameters	Quarterly	Collect definitive data to assess the reduction of VOCs in groundwater downgradient of the FDA/MA
Soil Vapor Extraction System Operation	FDA/MA SVE Headers/Well Heads	Vapor	See Table 2-5 of Design Report	Total VOCs	See Table 2-5 of Design Report	Collect screening data to assess performance of SVE system.
Soil Vapor Extraction System Operation	FDA/MA SVE Blower	Vapor	1	TCL VOCs	See Table 2-5 of Design Report	Collect definitive data to assess removal efficiency of SVE system
Soil Vapor Extraction System Operation	FDA/MA	Condensate	1	TCL VOCs	See Table 2-5 of Design Report	Collect definitive data to characterize removed condensate from SVE system to determine disposal methods
Combined Vacuum	Source Areas	NA	See Table 2-5 of Design Report	Vacuum	See Table 2-5 of Design Report	Collect screening data to check operation of, and optimize, SVE system.
Soil Vapor Vacuum	Wellheads / Piezometers	NA	See Table 2-5 of Design Report	Vacuum	See Table 2-5 of Design Report	
Vapor Flow	Source Areas	Vapor	See Table 2-5 of Design Report	Flow	See Table 2-5 of Design Report	
Vapor Flow	Wellheads / Clusters	Vapor	See Table 2-5 of Design Report	Flow	See Table 2-5 of Design Report	

Notes:

1. The methods that will be used for analysis are listed in Tables E4-3 and E4-5.
2. Quality control samples will be collected at the following frequency for delineation samples only: 1 field duplicate per twenty primary samples; 1 MS/MSD pair per twenty primary + field duplicate samples; 1 rinstate blank per matrix per twenty primary samples where non-dedicated equipment is used. 1 trip blank per day for aqueous VOC samples.
3. Field Parameters for groundwater monitoring include: pH, Temperature, Specific Conductivity, Turbidity, Dissolved Oxygen, and Oxidation-Reduction Potential. Field parameters for soil screening include: VOC vapors and visual characteristics.
4. Testing for additional parameters may be necessary and number of samples may be increased or decreased based on requirements of disposal facility.
5. Reporting limits and method detection limits are shown in Table E4-11.

NAP = Natural Attenuation Parameters as defined in Table E4-3.
FDA = Former Disposal Area
MA = Mounded Area
MPA = Main Plant Area
MNA = Monitored Natural Attenuation
PID = Photoionization Detector

TABLE E4-4
LABORATORY PRECISION AND ACCURACY CRITERIA
FOR AQUEOUS TCL SAMPLES
MALVERN TCE SUPERFUND SITE
SAMPLING AND ANALYSIS PLAN

VOLATILE ORGANICS:	QC LIMITS	
Target Compound	**% Recovery**	**% RPD**
1,1-Dichloroethene	61%-145%	0%-14%
Trichloroethene	71%-120%	0%-14%
Benzene	76%-127%	0%-11%
Toluene	76%-125%	0%-13%
Chlorobenzene	75%-130%	0%-13%
Surrogate Compound		
Toluene-d8	77%-124%	Not Applicable
Bromofluorobenzene	55%-142%	Not Applicable
1,2-Dichloroethane-d4	72%-133%	Not Applicable
Dibromofluoromethane	77%-124%	Not Applicable
POLYCHLORINATED BIPHENYLS:	**QC LIMITS**	
Target Compound	**% Recovery**	**% RPD**
Aroclor 1254	50%-100%	0%-20%
Surrogate Compound		
Tetrachloro-m-xylene	30%-150%	Not Applicable
Decachlorobiphenyl	30%-150%	Not Applicable

NOTES:

1. VOC accuracy and precision criteria based upon CLP SOW OLM03.2. PCB accuracy and precision criteria and VOC and PCB surrogate criteria based upon statistical control limits for Compuchem.

TABLE E4-5
PARCC DATA FOR SOIL SAMPLES
MALVERN TCE SUPERFUND SITE
SAMPLING AND ANALYSIS PLAN

MEASUREMENT PARAMETER	METHOD REFERENCE	LABORATORY PRECISION	FIELD & LABORATORY PRECISION	ACCURACY	COMPLETENESS (b)
TCL Volatile Organics	SW846 8260B	see Table E4-6	±100%	see Table E4-6	85%
TCL PCBs	SW846 8082	see Table E4-6	±100%	see Table E4-6	85%
TOC	SW846 9060	±50%	±100%	75%-125%	85%
Grain Size Analysis	ASTM D422	NA (a)	NA (a)	NA (a)	85%
Shear Strength	ASTM D2850	NA (a)	NA (a)	NA (a)	85%
Moisture Content	ASTM D2216	NA (a)	NA (a)	NA (a)	85%
Bulk Density	ASTM D1586/7	NA (a)	NA (a)	NA (a)	85%
Atterberg Limits	ASTM D4318	NA (a)	NA (a)	NA (a)	85%

NOTES:
1. NA = Not applicable
2.TCL = CLP Target Compound List, see CLP Statement of Work OLM03.2.
3. Precision expressed as either percent relative standard deviation (%RSD) or relative percent difference (%RPD).
4. Accuracy expressed as percent recovery of matrix spike or laboratory control sample.
5. Precision and accuracy for TCL parameters provided in Table E4-6
6. Representativeness and Comparability are non-quantitative parameters.
(a) Precision and accuracy goals that can not be defined as matrix spikes and duplicates will not be performed on geotechnical analyses.
(b) While the goal for completeness of laboratory measurements is 90%, the goal for total completeness (sampling and analytical) is 85%.

TABLE E4-6
LABORATORY PRECISION AND ACCURACY CRITERIA
FOR SOIL TCL SAMPLES
MALVERN TCE SUPERFUND SITE
SAMPLING AND ANALYSIS PLAN

VOLATILE ORGANICS:	QC LIMITS	
Target Compound	**% Recovery**	**% RPD**
1,1-Dichloroethene	59%-172%	0%-22%
Trichloroethene	62%-137%	0%-24%
Benzene	66%-142%	0%-21%
Toluene	59%-139%	0%-21%
Chlorobenzene	60%-133%	0%-21%
Surrogate Compound		
Toluene-d8	67%-149%	Not Applicable
Bromofluorobenzene	82%-130%	Not Applicable
1,2-Dichloroethane-d4	85%-153%	Not Applicable
Dibromofluoromethane	81%-143%	Not Applicable
POLYCHLORINATED BIPHENYLS:	**QC LIMITS**	
Target Compound	**% Recovery**	**% RPD**
Aroclor 1254	50%-150%	0%-20%
Surrogate Compound		
Tetrachloro-m-xylene	30%-150%	Not Applicable
Decachlorobiphenyl	30%-150%	Not Applicable

NOTES:

1. VOC accuracy and precision criteria based upon CLP SOW OLM03.2. PCB accuracy and precision criteria and VOC and PCB surrogate criteria based upon statistical control limits for Compuchem.

TABLE E4-7
LABORATORY PRECISION AND ACCURACY CRITERIA
FOR VAPOR TCL SAMPLES
MALVERN TCE SUPERFUND SITE
SAMPLING AND ANALYSIS PLAN

VOLATILE ORGANICS:		
Target Compound	**% Recovery**	**% RPD**
1,1-Dichloroethene	70%-130%	0%-30%
Trichloroethene	70%-130%	0%-30%
Benzene	70%-130%	0%-30%
Toluene	70%-130%	0%-30%
Chlorobenzene	70%-130%	0%-30%
Surrogate Compound		
Toluene-d8	70%-130%	Not Applicable
Bromofluorobenzene	70%-130%	Not Applicable
1,2-Dichloroethane-d4	70%-130%	Not Applicable
Dibromofluoromethane	70%-130%	Not Applicable

NOTES:

1. Accuracy and precision criteria based upon statistical control limits for Air Toxics.
2. Samples will be analyzed using USEPA Method TO-15.

TABLE E4-8
ANALYTICAL METHODS, SAMPLE CONTAINERS, PRESERVATION AND ANALYTICAL HOLD TIMES FOR AQUEOUS SAMPLES
MALVERN TCE SUPERFUND SITE
SAMPLING AND ANALYSIS PLAN

PARAMETER	METHODOLOGY	CONTAINER	MINIMUM SAMPLE	PRESERVATION [1]	HOLD TIME [2]
TCL Volatile Organics	SW846 8260B	3-40 ml G	3 - 40 ml	Cool 4 °C;HCl,pH<2	14 days [3]
TCL PCBs	SW846 8082	2-1000ml G	1000ml	Cool 4° C	7 days [5]
TOC	EPA 415.1	1-1000ml P	500ml	Cool 4° C; H_2SO_4, pH<2	28 days
Chloride	SM 4500CLB	1-1000ml P	500ml	Cool 4° C	14 days
Alkalinity	EPA 310.1	1-500 ml P	250 ml	Cool 4° C	28 days
Sulfate	EPA 375.4	1-500 ml P	250 ml	Cool 4° C	7 days
Sulfide	EPA 376.1	1-500 ml P	250 ml	Cool 4° C; ZnAc/NaOH, pH>9	7 days
Nitrate	EPA 353.2	1-500 ml P	250 ml	Cool 4° C	48 hours
Nitrite	EPA 353.2	1-1000ml P	500ml	Cool 4° C	28 days
Total Phosphate	EPA 365.2	1-500 ml P	250 ml	Cool 4° C; H_2SO_4, pH<2	28 days
Methane (sub-ppb detection level)	SW846 8015M [6]	3-40ml G	3-40ml	Cool 4° C [7]	7 days
Ethane (sub-ppb detection level)	SW846 8015M [6]	3-40ml G	3-40ml	Cool 4° C [7]	7 days
Ethene (sub-ppb detection level)	SW846 8015M [6]	3-40ml G	3-40ml	Cool 4° C [7]	7 days
TDS	EPA 160.1	1-500 ml P or G	250 ml	Cool 4 °C	7 days
Ferrous Iron	Test Kit	NA	NA	None	Field Measurement
Turbidity	Electrode	NA	NA	None	Field Measurement [4]
Oxidation-Reduction Potential	Electrode	NA	NA	None	Field Measurement [4]
Dissolved Oxygen	Electrode	NA	NA	None	Field Measurement [4]
Specific Conductance	Electrode	NA	NA	None	Field Measurement [4]
pH	Electrode	NA	NA	None	Field Measurement [4]
Temperature	Electrode	NA	NA	None	Field Measurement [4]

1. Sample preservation is performed by sampler immediately upon sample collection.
2. Hold time based upon day of sample collection not Verified Time of Sample Receipt.
3. If sample cannot be preserved due to foaming, unpreserved sample will be analyzed within 7 days.
4. Field measurements will be collected using a flow-through cell equipped with a field meter and parameter specific electrodes.
5. Hold time is 7 days until start of sample extraction, 40 days following extraction for analysis.
6. If Method SW846 8015M is not routinely performed by the laboratory, then an equivalent method will be used.
7. Vials that have specially designed, teflon lined septa to prevent loss of light hydrocarbons will be used.

P indicates that a Plastic bottle should be used.
G indicates that a Glass bottle should be used.
TCL = Target Compound List as defined in Contract Laboratory Program Statement of Work OLM03.2.

TABLE E4-9
ANALYTICAL METHODS, SAMPLE CONTAINERS, PRESERVATION AND ANALYTICAL HOLD TIMES FOR SOIL SAMPLES
MALVERN TCE SUPERFUND SITE
SAMPLING AND ANALYSIS PLAN

PARAMETER	METHODOLOGY	CONTAINER	MINIMUM SAMPLE	PRESERVATION [1]	HOLD TIME [2]
TCL Volatile Organics	SW846 5035/8260B	4 EnCore samplers	20 gm	Cool 4 °C	14 days [3]
TCL PCBs	SW846 8082	4 oz G	100 gm	Cool 4 °C	14 days [4]
TOC	SW846 9060	4 oz G	100 gm	Cool 4 °C	28 days
Grain Size Analysis	ASTM D422	30" ST	30" ST	Upright position[5]	NA
Shear Strength	ASTM D2850	30" ST	30" ST	Upright position[5]	NA
Moisture Content	ASTM D2216	30" ST	30" ST	Upright position[5]	NA
Bulk Density	ASTM D1586/7	30" ST	30" ST	Upright position[5]	NA
Atterberg Limits	ASTM D4318	30" ST	30" ST	Upright position[5]	NA

Notes:

1. Sample Preservation is performed by sampler immediately upon sample collection.
2. Hold time based upon day of sample collection not Verified Time of Sample Receipt.
3. Hold time is 48 hours for preservation using methanol and/or sodium bisulfate and 14 days to analysis.
4. Hold time is 14 days until start of sample extraction, 40 days following extraction for analysis.
5. Shelby tube should be waxed, capped, taped and then waxed again to preserve soil.

G indicates that a Glass bottle should be used.
TCL = Target Compound List as defined in Contract Laboratory Program Statement of Work OLM03.2.
TOC = Total Organic Carbon
ST = Shelby Tube

TABLE E4-10
ANALYTICAL METHODS, SAMPLE CONTAINERS, PRESERVATION AND ANALYTICAL HOLD TIMES FOR VAPOR SAMPLES
MALVERN TCE SUPERFUND SITE
SAMPLING AND ANALYSIS PLAN

MATRIX	PARAMETER	CONTAINER	PRESERVATION	HOLD TIME
Vapor	TCL VOCs	1-L Summa cannister	None	14 days

TABLE E4-11
TARGET COMPOUNDS AND ASSOCIATED LABORATORY REPORTING LIMITS
MALVERN TCE SUPERFUND SITE
SAMPLING AND ANALYSIS PLAN

	LIQUIDS			SOILS	VAPORS
TARGET ANALYTES	REPORTING LIMITS [ug/l]	MAX. CONTAMINANT LEVEL (MCL) [ug/L]	METHOD DETECTION LIMITS (MDL) [ug/L]	REPORTING LIMITS [ug/kg]	REPORTING LIMITS [ppmv]
Volatile Organic Compounds					
1,1,1-Trichloroethane	5		0.42	10	5
1,1,2,2-Tetrachloroethane	5		0.43	10	5
1,1,2-Trichloroethane	5		0.59	10	5
1,1-Dichloroethane	5		0.34	10	5
1,1-Dichloroethene	5	7	0.48	10	5
1,2-Dichloroethane	5	5	0.22	10	5
1,2-Dichloropropane	5		0.53	10	5
2-Butanone	13		1.08	10	20
2-Hexanone	13		2.16	10	20
4-Methyl-2-pentanone	13		1.54	10	20
Acetone	13		3.83	10	20
Benzene	5		0.36	10	5
Bromodichloromethane	5		0.22	10	20
Bromoform	5		0.31	10	20
Bromomethane	5		0.72	10	5
Carbon disulfide	5		0.39	10	20
Carbon tetrachloride	5		0.31	10	5
Chlorobenzene	5		0.38	10	5
Chloroethane	5		0.77	10	5
Chloroform	5	100	0.20	10	5
Chloromethane	5		0.82	10	5
cis-1,2-Dichloroethene	5		0.42	10	5
cis-1,3-Dichloropropene	5		0.65	10	5
Dibromochloromethane	5		0.42	10	20
Ethylbenzene	5		0.60	10	5
Methylene chloride	5		0.54	10	5
Styrene	5		1.51	10	5
Tetrachloroethene	5	5	0.55	10	5
Toluene	5		0.41	10	5
Total Xylenes	5		1.55	10	5
trans-1,2-Dichloroethene	5		0.50	10	20
trans-1,3-Dichloropropene	5		0.31	10	5
Trichloroethene	5	5	0.57	10	5
Vinyl chloride	5	2	0.60	10	5
PCBs					
Aroclor-1016	1.0			33	NA
Aroclor-1221	2.0			67	NA
Aroclor-1232	1.0			33	NA
Aroclor-1242	1.0			33	NA
Aroclor-1248	1.0			33	NA
Aroclor-1254	1.0			33	NA
Aroclor-1260	1.0			33	NA
Natural Attenuation Parameters				[mg/kg]	
TOC mg/l	5			NA	NA
Chloride mg/l	3			NA	NA
Alkalinity mg/l	10			NA	NA
Sulfate mg/l	5			NA	NA
Sulfide mg/l	0.5			NA	NA
Nitrate mg/l	0.05			NA	NA
Nitrite mg/l	0.05			NA	NA
Total Phosphate mg/l	0.1			NA	NA
Methane µg/l	0.015			NA	NA
Ethane µg/l	0.005			NA	NA
Ethene µg/l	0.005			NA	NA
TDS mg/l	10			NA	NA

Notes:

1. VOC and PCB Lists from CLP SOW OLM03.2
2. The RL for Vinyl Chloride is not below the ROD MCL criteria, however, the MDL for Vinyl Chloride is below the ROD MCL criteria. If there is a detection between the MDL and the RL, the result will be reported as estimated (J).
3. The RLs for the soil samples are the maximum reporting limits that may be used for an undiluted sample. The laboratory will report results to the Instrument Detection Limit (IDL) which are generated every quarter. Reporting Limits will be modified on an individual sample basis depending upon dilution, percent solids, and sample matrix considerations.
4. The RLs for vapor are approximate. They can change depending on the volume of sample used for analysis.

CHAIN OF CUSTODY RECORD

PROJ. NO.	PROJECT NAME				NO. OF CON-TAINERS	CONTAINER TYPE							REMARKS
SAMPLERS:													
SAMPLE	DATE	TIME	MATRIX	SAMPLE LOCATION									

RELINQUISHED BY: (Signature)	Date / Time	RECEIVED BY: (Signature)	RELINQUISHED BY: (Signature)	Date / Time	RECEIVED BY: (Signature)
RELINQUISHED BY: (Signature)	Date / Time	RECEIVED BY: (Signature)	RELINQUISHED BY: (Signature)	Date / Time	RECEIVED BY: (Signature)
RELINQUISHED BY: (Signature)	Date / Time	RECEIVED FOR LABORATORY BY:	Date / Time	REMARKS:	

Figure E4-1

GROUNDWATER SAMPLE FIELD INFORMATION FORM

Site: **Malvern TCE Superfund Site**
Location: **East Whiteland Township, PA**
Project Number: **003-6000**

MONITORING WELL ID: _____

Depth to Water Prior to Purging [ft-btoc]: _____
Well Casing Diameter [in]: _____
Start Time (purging): _____
Purging Device: _____
Well Depth [ft-btoc]: _____
Weather Conditions: _____

Sampling Date/Time: _____
Sampler(s): _____
Sampling Device: _____
Sample Characteristics: _____
Analytical Parameters: _____

FIELD PARAMETERS

Time [hh:mm]	Temperature [°C]	pH [std]	Specific Conductance [mS]	Turbidity [ntu]	Dissolved Oxygen [mg/l]	Redox Potential [mV]	Depth To Water [ft-btoc]	Volume Purged [liters]	Approximate Purge Rate [ml/min]

Comments: _____

Figure E4-2

APPENDIX F

TECHNICAL SPECIFICATIONS

APPENDIX F
CONSTRUCTION SPECIFICATIONS

DIVISION 0

Section 00020 Invitation to Bidders – completed by *de maximis*
Section 00100 Instructions to Bidders – completed by *de maximis*
Section 00140 Bid Submittal Letter – completed by *de maximis*
Section 00300 Bid Form (Bid Documents Only)
Section 00600 Agreement – completed by *de maximis*
Section 00610 Performance Bond – completed by *de maximis*
Section 00620 Payment Bond – completed by *de maximis*
Section 00700 General Conditions – completed by *de maximis*
Section 00800 Supplementary General Conditions – completed by *de maximis*

DIVISION 1 – GENERAL REQUIREMENTS

Section 01010 Summary of Work
Section 01025 Measurement and Payment (To be included in Bid Documents only)
Section 01026 Schedule of Values
Section 01027 Application for Payment
Section 01028 Change Order Procedures
Section 01041 Project Coordination
Section 01050 Field Engineering/Surveying
Section 01200 Project Meetings
Section 01300 Submittals
Section 01400 Quality Control
Section 01540 Job Site Security
Section 01550 Site Access and Traffic Control
Section 01562 Dust Control
Section 01563 Contingency Plan for VOC / Odor
Section 01564 Health and Safety Specifications for Construction
Section 01580 Warning Signs
Section 01590 Field Offices and Storage Space
Section 01600 Material and Equipment
Section 01610 Transportation and Handling
Section 01611 Storage and Protection
Section 01655 Mechanical Checkout/Start-Up
Section 01666 Cleaning and Testing of Piping
Section 01700 Contract Closeout
Section 01720 Project Record Documents
Section 01740 Warranties

DIVISION 2 – SITE WORK

Section 02010 Subsurface Conditions
Section 02070 Monitoring Well Abandonment
Section 02090 Site Demolition
Section 02100 Site Preparation
Section 02110 Site Clearing and Grubbing

Section 02125 Temporary and Permanent Erosion and Sedimentation Control
Section 02140 Construction Dewatering
Section 02150 Shoring and Bracing
Section 02210 Site Grading
Section 02220 Excavation
Section 02221 PCB Soil Excavation and Disposal
Section 02223 Backfill and Fill
Section 02224 Cap Cover Soil and Cushion Soil
Section 02225 Vegetative Layer (Topsoil)
Section 02233 Aggregate
Section 02271 Stone Riprap
Section 02402 Liquids Handling and Disposal
Section 02431 Decontamination
Section 02433 SVE Well Construction
Section 02595 Geotextile
Section 02597 LLDPE Geomembrane
Section 02598 Geocomposite
Section 02600 Steel Pipe, Fittings, and Valves
Section 02610 PVC Pipe, Fittings, and Valves
Section 02615 HDPE Pipe
Section 02675 Monitoring Well Installation
Section 02831 Chain Link Fences and Gates
Section 02910 Modification of Existing Wells
Section 02936 Seeding

DIVISION 3 – CONCRETE

Section 03100 Formwork
Section 03200 Concrete Reinforcement
Section 03300 Concrete

DIVISION 11 – EQUIPMENT

Section 11399 Wellhead Control Building
Section 11510 SVE Blower System
Section 11520 Carbon Adsorption Units

DIVISION 15 – MECHANICAL

Section 15094 Pipe Supports and Hangers

DIVISION 16 – ELECTRICAL

Section 16000 Electrical – General Provisions
Section 16502 Lightning Protection System
Section 16660 Grounding
Section 16930 Control System

DIVISION 1

SECTION 01010

SUMMARY OF WORK

PART 1 – GENERAL

1.01 PURPOSE

A. Part 1 of this section provides a general overview of the status, regulatory, and health and safety requirements of the project. Part 2 describes the scope of work to be performed, other activities to be undertaken by the OWNER at the site, the allowed use of the site by the CONTRACTOR, and the sequence of the work. The Site work and design requirements are provided in the Contract Drawings and Technical Specifications. Part 3 provides a general schedule for construction milestones and sequencing. Part 4 of this section describes the requirements of mechanical checkout, and system start-up.

1.02 OVERVIEW

This contract includes three major activities, including: (1) excavation, relocation, and management of on-site contaminated soil, (2) installation, mechanical check-out and system start-up of a soil vapor extraction (SVE) system, and (3) installation of soil cap. The OWNER will designate an individual, OPERATOR, to operate and maintain the system following start-up. The Pre-Final (90%) Design Report (PFDR), prepared by Golder Associates Inc. (December 2003), describes the history of the Site.

Golder Associates Inc., on behalf of the OWNER, has conducted numerous investigations, including a SVE pilot test and has performed SVE modeling for the purpose of setting the design and performance requirements for thesite. The results of the investigation are available in the reference documents listed below.

This Section of the Technical Specifications provides a general overview of the system requirements; construction requirements are set forth in the Contract Drawings and Technical Specifications. The CONTRACTOR must install the system in accordance with the Technical Specifications and Contract Drawings.

The Contract Drawings and Technical Specifications present requirements for the soil excavation, construction of the SVE system, and installation of a soil cap. They also specify minimum submittal requirements, performance, equipment selection, limitations, quality assurance, construction, and installation requirements for the civil/structural, electrical, mechanical, and other work that must be completed to fulfill the Remedial Action requirements. The Contract Drawings and Technical Specifications denote the quality of Work to be provided by the CONTRACTOR and will be used as a basis for the ENGINEER to evaluate the Work of the CONTRACTOR with regard to quality assurance and payment.

In addition, the CONTRACTOR may wish to review the following reference documents available at the Public Repository or the office of the ENGINEER:

- Record of Decision, USEPA, November 1997.
- Pre-Final Design Report, Golder Associates Inc., May 2004.
- Pre-Design Investigation Report, Golder Associates Inc., May 2002.
- Consent Decree, USEPA, December 1999.
- Focused Feasibility Study Report, Golder Associates Inc., May 2002.
- SVE Pilot Study Report, Golder Associates, May 2002.

This information presented in the Contract Documents must be used for the formulation of the CONTRACTOR's base bid. In addition to the base bid, the CONTRACTOR may submit alternate bids that deviate from the Technical Specifications. The specific requirements for alternate and base bids are presented in the Instructions to Bidders.

1.03 REGULATORY REQUIREMENTS

The CONTRACTOR shall comply with all laws and regulations including the Record of Decision Amendment No. 1, the Record of Decision and the Consent Decree for the Malvern TCE Superfund Site that in any manner govern the Work. This shall include but not be limited to local, state and federal laws and regulations that govern the construction, start-up, and operation of the system.

In addition to adhering to these laws and regulations the CONTRACTOR shall prepare, submit and gain approval of certain permits or permit equivalencies required for construction and initial operation of the system.

The OWNER will provide the CONTRACTOR with the necessary access approvals for work to be performed on land not owned by the OWNER. The CONTRACTOR shall notify the OWNER if any additional access approvals are required or access is denied to the CONTRACTOR during construction.

The following activities, permit equivalencies, and/or approvals will be the responsibility of the OWNER:

- Compliance with substantive requirements of East Whiteland Township Land Development and Zoning Ordinances;
- Air pollution control construction and operating permits;
- Approval for backfilling existing excavations;
- Approval for crossing the Williams Transco pipeline right-of-way;
- Access approvals and identifying existing easements;
- Any permanent local building or permanent utility permits; and
- Off-site waste disposal approval.

The following activities, permits or equivalencies shall be the responsibility of the CONTRACTOR. The CONTRACTOR is responsible for identifying and obtaining any other permits that are not listed within this section that will be necessary to complete the listed Work components:

- Site Hot-Work Permits from ENGINEER;
- Staging and storage of solid and hazardous waste, as characterized by ENGINEER, in accordance with federal, state and local regulations;

- The CONTRACTOR is responsible for preparing and adhering to the E&S Plan;
- Immediate notification of the OWNER of any event that is required to be reported to USEPA pursuant to CERCLA Section 103 or EPCRA Section 304. If the OWNER cannot be reached within 24 hours, notification shall be made directly to the USEPA Region III Hotline; and
- Any temporary utility hook ups and permits.

OWNER will reimburse CONTRACTOR for permit fees paid to government agencies for permanent works.

1.04 HEALTH AND SAFETY REQUIREMENTS

A. The CONTRACTOR shall be responsible for the preparation and implementation of a Health and Safety Plan consistent with the Contract Documents for the construction, mechanical checkout, and start-up of the system. A Health and Safety Plan Outline is included in the Contract Documents and shall include a Decontamination Plan and Contingency Plan. Additional Health and Safety Specifications for Construction are included in Section 01564.

B. The CONTRACTOR shall submit a detailed description of health and safety, Decontamination and Contingency procedures necessary with its bid, and a Construction Health and Safety Plan for favorable review as one of the pre-construction submittals required in Section 01300 of the Technical Specifications. The Construction Health and Safety plan shall define the protocols for protecting the CONTRACTOR's and SUBCONTRACTOR's personnel, and other on-site personnel during construction of the system.

C. The Construction Health and Safety Plan must be approved in writing by the CONTRACTOR's Health and Safety Officer prior to submittal to the OWNER and ENGINEER as described in Section 01300 of the Technical Specifications.

1.05 SUBMITTALS

A. Submittals shall be in accordance with the requirements of Section 01300 of the Technical Specifications.

PART 2 – WORK TO BE PERFORMED

The following presents a general description of the work to be performed by the CONTRACTOR. For detailed information concerning distribution of costs among Bid Items, the CONTRACTOR is directed to Section 01025 (Measurement and Payment) of the Technical Specifications.

2.01 FDA/MA SOIL REMEDY

The CONTRACTOR shall install a soil vapor extraction (SVE) system which includes construction of new vertical SVE wells, vapor monitoring probes, modification of existing SVE wells, installation of new blower package treatment system and associated equipment including the building as described in the Technical Specifications and

presented on the Contract Drawings. The CONTRACTOR shall provide a complete system consisting of pipes, valves, electrical system, and control system in accordance with the Contract Drawings and Technical Specifications.

Equipment and personnel will be restricted from entering the existing excavations during the removal of vegetative matter and backfilling. An excavation stability analysis has been completed which indicates that equipment (to remove vegetative matter and to backfill the existing excavations) maintain a distance of at least 8 feet from the edge of the excavation while the side slopes are unsupported. The excavation stability analyses will be completed and is presented in the 90% Design Report. The work will need to be completed in stages using controlled backfilling techniques. If the CONTRACTOR determines that equipment and personnel are required to enter the excavation, according to the Code of Federal Regulations concerning labor, Part 1926, Regulation 1926.652, Requirement for Protection Systems, any excavation that extends deeper than 5 feet below the ground surface, and are not made entirely in stable rock, require a protection system, engineered slope cutbacks, or structural supports to resist potential cave-in. All determinations of required side slopes or necessary excavation support will be made by the CONTRACTOR's Professional Engineer to ensure excavation stability. The CONTRACTOR's Professional Engineer will also determine limits to which personnel and equipment may approach an open excavation. A 2:1 slope will be used as a guideline for determining the minimum distance from the excavation that temporary fencing shall be constructed to prevent non-workers from approaching the excavation. Additional excavations will be completed for the construction of the SVE system components, including, but not limited to, pipe trenches and control box excavations. The stability of and supports required for these excavations will be provided by the CONTRACTOR, as discussed above. No excavation supports are required for the shallow (2-foot) PCB impacted soil excavations.

The CONTRACTOR shall provide equipment and materials to conduct the collection of soil samples from identified locations. These soil samples will be used to determine if additional SVE wells or the relocation of SVE wells may be required for remediation. If, based on visual observations, or PID readings, the sampling locations are determined to require remediation, the ENGINEER may abandon the sampling location and select an alternate location. After the samples are collected, it is expected that the analytical results will be finalized and interpreted (i.e., a determination whether the relocation of wells or additional wells and sampling will be required) within 21 days. The CONTRACTOR shall include this 21 day period in their schedule.

2.02 FDA/MA GROUNDWATER REMEDY

The primary objective for the design of the MNA remedy is to develop monitoring and data analyses procedures that will be used to assess the reduction of VOCs in groundwater downgradient from the FDA/MA. Specific goals to meet this objective include:

- Assessment of decreasing concentrations and mass reduction; and,
- Assessment of geochemical conditions indicative of natural attenuation.

This additional design objective is to provide continued verification of the groundwater flow direction. It is important to note that the change in predominant groundwater flow direction may be a relatively recent trend and, as such, groundwater quality northeast of

the FDA/MA might still be equilibrating (i.e., microbial populations adjusting to changing geochemical conditions and the leveling of dispersion and dilution effects). Therefore, temporal and spatial variability in groundwater quality is expected northeast of the FDA/MA until hydrogeologic, biologic, and geochemical conditions equilibrate with the relatively recent change in groundwater flow direction.

The remedy includes the decommissioning of one well (well CC-11), and the installation of a replacement monitoring well (CC-11R) at the locations shown on the Contract Drawings. The location of the replacement monitoring well is to be approved by the ENGINEER.

2.02 MPA SOIL REMEDY

The ROD describes the remedy as "Installation of a cap to prevent direct contact with contaminated soils at the Main Plant and to reduce the potential for continued migration of these contaminants to the groundwater." The ROD also requires the closure and removal/disposal of aboveground structures and tanks, and associated equipment, materials, and debris prior to the installation of the cap.

The objective of the design of the MPA soil remedy is to complete the design of a cap that meets the ROD Performance Standards as presented and clarified in the 90% Design Report.

PART 3 - CONSTRUCTION MILESTONES AND SEQUENCING

The CONTRACTOR shall be responsible for meeting the schedule for project milestones presented in Section 00020. Construction schedules shall be compiled and submitted in accordance with the requirements of Sections 01300 of the Technical Specifications.

PART 4 – MECHANICAL CHECKOUT AND SYSTEM START-UP

The CONTRACTOR is responsible for providing all labor, equipment, and materials required to complete and document mechanical checkout and system start-up as described in Section 01655. Prior to start-up, the OWNER will designate an individual, OPERATOR, to operate and maintain the system. The CONTRACTOR shall provide training to the OPERATOR for operation of the system.

*****END OF SECTION*****

SECTION 01026

SCHEDULE OF VALUES

PART 1 - GENERAL

1.01 DESCRIPTION OF WORK

A. The Work of this Section includes the preparation and submittal of a Schedule of Values.

1.02 RELATED SECTIONS

A. Bid Form – Section 00300

B. Applications for Payment – Section 01027

C. Submittals – Section 01300

1.03 GENERAL

A. The CONTRACTOR shall submit a draft Schedule of Values to the ENGINEER for approval within ten (10) days of the Notice to Proceed.

B. Timing of Submittal: Submit to the ENGINEER a Schedule of Values allocated to the various portions of the Work within ten (10) days after the Notice to Proceed. The first progress payment will not be made until at least the next payment period following the ENGINEER's approval of the CONTRACTOR's values.

C. Supporting Data: Upon request of the ENGINEER, support the values with data which will substantiate their correctness.

D. Use of Schedule: The Schedule of Values, unless objected to by the ENGINEER, shall be used only as a basis of the CONTRACTOR's Application for Payment. In-progress payments will be based on Work completed.

E. Payment will be made only for completed and accepted Work in place. A 10% retainage will be withheld on all payments.

1.04 FORM AND CONTENT OF SCHEDULE OF VALUES

A. Form and Identification

1. The CONTRACTOR's standard forms and automated printout may be utilized.
2. Identify the Schedule of Values with:

a. Project title and location;
b. OWNER;
c. Name and address of the CONTRACTOR;
d. Contract designation;
e. Date of submission; and,
f. Change Order number.

B. The Schedule of Values shall list the installed value of the component parts of the Work in sufficient detail to serve as a basis for computing values for progress payments during construction. Breakdown shall be by structure, then by Construction Specification Institute (CSI) Format, for ease of field verification of quantities completed in each structure.

C. Format

1. Follow the Bid Form (Section 00300) of the Bidding Documents and Specifications as the format for listing the component items.
2. Identify each item with the number and title of the respective major section of the Specifications.

D. For each major line item, list subvalues of major products or operations under the item.

E. For the various portions of the Work, each item shall include a directly proportional amount of the CONTRACTOR's burden, overhead, and profit.

F. The sum of all values listed in the Schedule of Values shall equal the total Contract sum.

PART 2 - PRODUCTS

Not Used.

PART 3 - EXECUTION

Not Used.

*****END OF SECTION*****

SECTION 01027

APPLICATIONS FOR PAYMENT

PART 1 - GENERAL

1.01 PURPOSE

A. The purpose of this Section is to outline the procedures for the preparation and submittal of Applications for Payment by the CONTRACTOR.

1.02 RELATED SECTIONS

A. Bid Form – Section 00300

B. Measurement and Payment – Section 01025

C. Schedule of Values – Section 01026

D. Submittals – Section 01300

E. Contract Closeout – Section 01700

1.03 FORMAT

A. AIA G702 - Application and Certificate for Payment including continuation sheets when required, or alternative as accepted by the ENGINEER.

B. The CONTRACTOR may submit to the ENGINEER, for approval, an alternate payment application format.

C. For each item, provide a column for listing: Item Number; Description of Work; Scheduled Value; Previous Applications; Work in Place and Stored Materials under this Application; Authorized Change Orders; Total Completed and Stored to Date of Application; Percentage of Completion; Balance to Finish; and, Retainage.

1.04 PREPARATION OF APPLICATIONS

A. Present required information on electronic media printout acceptable to the ENGINEER.

B. Execute certification by signature of authorized officer.

C. Use data from the approved Schedule of Values. Provide dollar value in each column for each line item for portion of Work performed and for stored products.

D. List each authorized Change Order as an extension on continuation sheet, listing Change Order number and dollar amount as for an original item of Work.

E. Prepare the Application for Final Payment as specified in Section 01700 of these Specifications.

1.05 SUBMITTAL PROCEDURES

A. Submit each Application for Payment to the ENGINEER for verification and acceptance of the information provided. The OWNER's REPRESENTATIVE will submit each Application for Payment to the OWNER's REPRESENTATIVE for final payment approval.

B. Provide one (1) original and two (2) copies of each Application for Payment. The individual documents shall be so marked so as to distinguish the original and the copy. Copies may be submitted electronically.

C. Submit an updated Construction Schedule with each Application for Payment.

D. Payment Period: Monthly, unless otherwise specified.

E. Submit under transmittal letter as specified in Section 01300 of these Specifications.

F. Submit one (1) set of As-Built Drawings with each Application for Payment, as specified in Section 01300 of these Specifications.

G. Submit required waivers.

H. Applications for Payment will not be processed unless the application is complete, in compliance with the requirements of this Section, and the Project Record Documents are up-to-date and complete.

I. Payment shall be within thirty (30) days of submittal and acceptance by the ENGINEER and approval by the OWNER.

1.06 SUBSTANTIATING DATA

A. When the ENGINEER and/or the OWNER's REPRESENTATIVE require substantiating information, submit data justifying the dollar amounts in question.

B. Provide one (1) copy of the data with cover letter for each copy of the submitted Application for Payment. The cover letter shall include the number and date of the Application for Payment for which the substantiating data has been requested, and the line item(s), by number and description, for which the data substantiates.

PART 2 - PRODUCTS

Not Used.

PART 3 - EXECUTION

Not Used.

*****END OF SECTION*****

SECTION 01028

CHANGE ORDER PROCEDURES

PART 1 - GENERAL

1.01 PURPOSE

A. The purpose of this Section is to outline the procedures for the preparation and submittal of Change Orders by the CONTRACTOR.

1.02 SUBMITTALS

A. The CONTRACTOR shall submit the name of the individual authorized to approve Change Orders, receive changed documents, and who is responsible for informing others in the CONTRACTOR's employment or SUBCONTRACTORs of changes to the Work.

1.03 DOCUMENTATION OF CHANGE IN CONTRACT SUM/PRICE AND TIME

A. Maintain detailed records of Work done on a time and material (force account) basis. Provide full information required for evaluation of proposed changes, and to substantiate costs of changes in the Work.

B. Document each quotation for a change in cost or time with sufficient data to allow evaluation of the quotation.

C. On request from the OWNER's REPRESENTATIVE and/or ENGINEER, provide additional data to support computations:

1. Quantities of products, labor, and equipment;
2. Taxes, insurance and bonds;
3. Overhead and profit;
4. Justification for any change in Contract Time; and,
5. Credit for deletions from Contract, similarly documented.

D. Support each claim for additional costs, and for Work done on a Force Account basis, with additional information:

1. Origin and date of claim;
2. Dates and times work was performed, and by whom;
3. Time records and wage rates paid; and,
4. Invoices and receipts for products, equipment, and subcontracts, similarly documented.

1.04 CHANGE PROCEDURES

A. The OWNER's REPRESENTATIVE and ENGINEER will advise the CONTRACTOR of minor changes in the Work not involving an adjustment to the Contract Sum/Price or Contract Time as necessary by issuing supplemental instructions.

B. The OWNER's REPRESENTATIVE and ENGINEER may issue a Proposal Request (Change Notice) which includes a detailed description of a proposed change with supplementary or revised Contract Drawings and Specifications, a change in Contract Time for executing the change, and the period of time during which the requested price will be considered valid. The CONTRACTOR will prepare and submit an estimate within five (5) working days.

C. The CONTRACTOR may propose a change by submitting a request for a Change Order to the OWNER's REPRESENTATIVE and ENGINEER. The request shall describe the proposed change and its full effect on the Work, with a statement describing the reason for the change, and the effect on the Contract Sum/Price and Contract Time with full documentation and a statement describing the effect on Work by separate or other contractors. The ENGINEER shall review the request and submit it to the OWNER's REPRESENTATIVE within fifteen (15) days from receipt of the request. The OWNER's REPRESENTATIVE shall respond within thirty (30) days from the date the request was received by the ENGINEER.

1.05 WORK DIRECTIVE CHANGE

A. The OWNER's REPRESENTATIVE and/or ENGINEER may issue a document instructing the CONTRACTOR to proceed with a change in the Work, for subsequent inclusion in a Change Order.

B. The document will describe the change in the Work, and will designate a method of determining any change in Contract Sum/Price or Contract Time.

C. Promptly execute the change in the Work.

1.06 STIPULATED PRICE CHANGE ORDER

A. Based on a Proposal Request and the CONTRACTOR's fixed price quotation, or the CONTRACTOR's request for a Change Order, as approved by the OWNER's REPRESENTATIVE.

1.07 UNIT PRICE CHANGE ORDER

A. For pre-determined unit prices and quantities, the Change Order will be executed on a fixed unit price basis.

B. For unit costs or quantities of units of Work, which are not pre-determined, execute the Work under a Work Directive Change.

C. Changes in the Contract Sum/Price or Contract Time will be computed as specified for a Force Account Change Order.

1.08 FORCE ACCOUNT CHANGE ORDER

A. The CONTRACTOR shall submit an itemized account, with supporting data, after completion of the change and within the time limits indicated in the Conditions of the Contract.

B. The OWNER's REPRESENTATIVE will determine the change allowable in Contract Sum/Price and Contract Time as provided in the Contract Documents.

C. Maintain detailed records of Work done on Force Account basis.

D. Provide full information required for evaluation of proposed changes and to substantiate the costs for changes in the Work.

1.09 EXECUTION OF CHANGE ORDERS

A. The OWNER's REPRESENTATIVE will issue Change Orders for signatures of the parties as provided in the Conditions of the Contract.

1.10 CORRELATION OF CONTRACTOR SUBMITTALS

A. Promptly revise the Application for Payment forms to record each authorized Change Order as a separate line item and adjust the Contract Sum/Price.

B. Promptly revise the Construction Schedule to reflect any change in the Contract Time. Revise any sub-schedules to adjust the time for other items of the Work affected by the change and submit the revised schedules with the Application for Payment.

C. Promptly enter all changes to the Work in the Project Record Documents.

PART 2 - PRODUCTS

Not Used.

PART 3 - EXECUTION

Not Used.

*****END OF SECTION*****

SECTION 01041

PROJECT COORDINATION

PART 1 - GENERAL

1.01 DESCRIPTION OF WORK

A. Management of the Project (Work) shall be through the use of a logical method of construction planning, inspection, scheduling and cost value documentation.

B. The Work under this Section includes all inspections and coordination by the CONTRACTOR necessary for the proper and complete performance of the Work.

C. This Section applies to the Work of every Division and every Section of these Specifications.

1.02 SITE CONDITIONS

A. Inspection

1. Prior to performing any Work under a Section, the CONTRACTOR shall carefully inspect the installed Work of other trades and verify that all such Work is complete to the point where the Work under that Section may properly commence.
2. The CONTRACTOR shall verify that all materials, equipment and products to be installed under a Section will be installed in accordance with the Contract Documents and pertinent reviewed and approved Contractor's Submittals & Shop Drawings.

B. Discrepancies

1. In the event of a discrepancy, immediately notify the ENGINEER.
2. Do not proceed with the installation in areas of discrepancy until all such discrepancies have been fully resolved.

C. Mobilization

1. Cooperate with the ENGINEER in allocation of mobilization areas, field offices, sheds, access, traffic and parking facilities.
2. During construction, coordinate use of Site and facilities through the ENGINEER.
3. Comply with the Contract Documents and coordinate with the ENGINEER for intra-project communications, submittals, reports and records, schedules, coordination, drawings, and resolution of ambiguities and conflicts.
4. Comply with the instructions of the ENGINEER for use of temporary utilities and construction facilities.
5. The CONTRACTOR shall provide field engineering, including surveying, and layout in accordance with Section 01050, and shall coordinate such activities with the ENGINEER.

1.03 COORDINATION

A. Carefully schedule and coordinate the Work with all suppliers, utility companies, SUBCONTRACTORs, and other trades to ensure proper and adequate interface of the Work of other trades and SUBCONTRACTORs with the Work of every Section of these Specifications.

B. The CONTRACTOR shall coordinate operations with all utility companies in or adjacent to the area of the CONTRACTOR's Work. The CONTRACTOR shall require said utility companies to identify in the field their property and provide drawings as necessary to locate them.

C. The CONTRACTOR shall coordinate the Work with the requirements for quality control or quality assurance testing by the ENGINEER. The CONTRACTOR shall provide access to the Work for inspection and shall stop portions of the Work as necessary to allow for inspection.

1.04 SCHEDULES

A. The CONTRACTOR shall submit the initial Construction Schedule for review in accordance with Section 01300 of these Specifications. After review, revise and resubmit the Construction Schedule.

B. During the progress of the Work, the CONTRACTOR shall revise and resubmit the Construction Schedule as requested by the ENGINEER, and in any case, at least monthly. Submit a revised Construction Schedule with each Application for Payment.

C. The CONTRACTOR shall prepare all schedules using Microsoft Project 2000 with all recent upgrades, patches, and fixes, as favorably reviewed by the ENGINEER. The CONTRACTOR's schedule shall be resource loaded, meet the conditions of the Site, and be provided in hard copy and electronically (i.e., via e-mail and computer file), as requested.

1.05 OTHER COORDINATION

A. Submit in writing requests for clarification of the Contract Documents and obtain clarification through the ENGINEER in writing.

B. Process request for substitutions through the ENGINEER prior to commencement of Work in affected areas in writing.

C. Process requests for Change Orders through the ENGINEER, in accordance with Sections 01028 and 01300, respectively.

D. Deliver closeout submittals for review and preliminary inspection reports for transmittal to the ENGINEER.

E. Notify the ENGINEER in writing when the Work is considered substantially complete, in accordance with Section 01700 of these Specifications. Accompany

the ENGINEER, Quality Assurance Official, and ENGINEER on a preliminary final inspection.

F. Comply with the instructions of the ENGINEER for completion of any items of the Work determined not to be substantially complete by the preliminary final inspection.

G. Provide Contract Closeout Documents in accordance with Section 01700 of these Specifications.

H. Prior to initiating Work and during performance of Work (as required), CONTRACTOR shall coordinate as necessary with appropriate local officials including: local police, fire and health department, hospital, township government and school district, and Pennsylvania Department of Transportation so that Work is performed without interruptions and in compliance with federal, state, and locate requirements.

PART 2 - PRODUCTS

Not Used.

PART 3 - EXECUTION

Not Used.

*****END OF SECTION*****

SECTION 01050

FIELD ENGINEERING/SURVEYING

PART 1 - GENERAL

1.01 DESCRIPTION OF WORK

A. The CONTRACTOR shall be responsible for providing surveying services for accurate location of all features of construction and for establishing all proposed grades. The CONTRACTOR shall be responsible for all surveys and calculations for layout of the Work, measurements for payment quantities, verification of grades, verification of the thickness of layers/lifts, and the preparation and maintenance of project As-Built Drawings.

B. The CONTRACTOR shall employ a Land Surveyor registered in the Commonwealth of Pennsylvania and acceptable to the ENGINEER.

C. The CONTRACTOR shall submit evidence of the Surveyor's errors and omissions insurance coverage in the form of an Insurance Certificate with limits as specified in the Contract Documents.

D. The CONTRACTOR shall make all measurements and check all dimensions necessary for the proper performance of the Work in accordance with the Contract Documents. During the execution of the Work, the CONTRACTOR shall make all necessary measurements to ensure the accurate performance of the Work.

E. The CONTRACTOR shall be responsible for submitting survey information to be used by the ENGINEER in verifying payment quantities.

F. The ENGINEER may retain a Pennsylvania registered Land Surveyor to independently verify survey lines and grades and payment quantities. In the event of a discrepancy, the surveyor retained by the ENGINEER will govern. The CONTRACTOR and the CONTRACTOR's surveyor shall be responsible for cooperating with the surveyor retained by the ENGINEER and for submitting copies of any survey calculations and data, if required by the ENGINEER. No separate payment shall be made for cooperating with the surveyor or providing copies of survey calculations.

1.02 QUALITY CONTROL

A. The CONTRACTOR's surveyor shall be a qualified and registered Land Surveyor in the State of Pennsylvania. This surveyor shall have a minimum of five (5) years experience in construction surveying layout and maintenance of as-built construction drawings with a record of performing horizontal and vertical control requirements as stated in the Contract.

B. All surveying personnel must have, at a minimum, training in accordance with 29 CFR 1910.120.

1.03 SUBMITTALS

A. The CONTRACTOR shall submit for approval by the ENGINEER the name, address, and telephone number of the Surveyor prior to initiation of any survey work.

B. The CONTRACTOR shall submit documentation verifying the accuracy of the survey and the Work to ENGINEER upon request.

C. The CONTRACTOR shall submit to the ENGINEER a survey of the existing conditions prior to mobilization onto the Site and within ten (10) days after the date of commencement as stated in the Notice to Proceed.

D. The CONTRACTOR's Surveyor shall submit sealed and signed As-Built Drawings and survey notes, which state that the elevations and locations of Site-constructed features are in conformance with the Contract Documents, to the ENGINEER at the completion of each phase of the Work requiring the services of the Surveyor.

No Work shall be covered until the as-built surveying has been performed. If the Work has been covered before the survey has been completed, that portion of the Work will be uncovered, surveyed, and reconstructed at the CONTRACTOR's expense.

E. Submit in accordance with Section 01300 of these Specifications.

1.04 PROJECT RECORD DOCUMENTS

A. The CONTRACTOR shall prepare and submit Project Record Documents to the ENGINEER in accordance Sections 01720 and 01300 of these Specifications, respectively.

B. A complete, accurate log of control and survey work, as it progresses, shall be maintained at the Site by the CONTRACTOR and submitted to the ENGINEER upon request.

C. Upon completion of the Work, a complete set of Record Documents must be submitted by the CONTRACTOR to the ENGINEER for review and acceptance under the provisions of Section 01720 of these Specifications. Copies of all required survey data, calculations, and summary tables, sealed and signed by the Surveyor, shall be submitted. If insufficient detail is provided to document proper completion of Work, CONTRACTOR may be requested to provide additional as-built survey information at CONTRACTOR's expense.

1.05 SURVEY REQUIREMENTS

A. Provide field-engineering services using recognized engineering survey practices.

B. Establish line and grade as required to complete the Work. Identify, locate and/or layout the following:

1. Existing conditions, including grade elevations, limit of excavations, fenceline, and drainage features.
2. Existing utilities, underground pipes and/or structures to be regraded, modified, or connected to; or, are located in such manner as to affect any portion of the Work. Include depths to pipe to assist with the progression of excavation.
3. Line and grade for measurement and payment purposes (i.e., determination of in-place quantities). The CONTRACTOR shall provide sufficient survey to verify the quantities included in Applications for Payment, by providing pre- and post-construction survey information. Existing topographic contours provided in the Contract Drawings should not be relied upon as pre-construction documentation.
4. As-Built survey information shall include, but not be limited to, the following:
   a. Alignment and profile of all underground features;
   b. Delineation of the surface water management system;
   c. Vertical and horizontal locations of new groundwater monitoring wells and SVE wells;
   d. SVE system including all underground conduit and collection pipes, manholes, enclosures, vaults, tanks and appurtenances in plan and section;
   e. Adjacent ground surface and top of inner and outer casings of groundwater monitoring wells and SVE wells to a tolerance of ±0.01 foot.
   f. The areas of cap and soil placement;
   g. Location of any fences and gates;
   h. Geomembrane grades;
   i. Vertical and horizontal locations of the passive vent wells (if applicable);
   j. The finished grade elevations at a contour interval of 1 foot to a tolerance of ± 0.1 foot; .
   k. Access road alignment;
   l. Other visible features in the construction area;
   m. Regrading activities to verify fill grades, fill thickness, and fill extent; and,
   n. Any additional requirements of Section 01720 of these Specifications.

C. Periodically verify layouts by same means prior to backfilling.

1.06 SURVEYS FOR MEASUREMENT FOR PAYMENT

A. The CONTRACTOR shall perform surveys, where required, to determine the quantities of Work performed/conducted, including control surveys to establish appropriate surveying references. Notify the ENGINEER at least one (1) week prior to the start of any survey Work.

1. At a minimum, surveys shall be performed both prior to and following the completion of regrading, but prior to backfilling. The CONTRACTOR may also perform interim surveys to support an Application for Payment.
2. Perform surveys to locate all new groundwater monitoring and SVE wells. The locations shall be tied into the existing Site coordinate system to an accuracy of 0.01 feet. Elevations shall be surveyed to an accuracy of 0.1 feet.
3. The CONTRACTOR will sign the Surveyor's field notes, or keep independent field notes, and shall calculate and certify quantities for payment purposes.
4. Copies of all original survey data, calculations, and summary tables shall be submitted with all Applications for Payment and with the Project Record Documents.
5. The CONTRACTOR shall complete Well Forms A and B for submittal to the PADEP with copies to the ENGINEER.

PART 2 - PRODUCTS

Not Used.

PART 3 - EXECUTION

3.01 INSPECTION

A. All surveys for this Contract must use, and be referenced to, the Site's existing coordinate system (Northing, Easting, and elevation), which is shown on the Contract Drawings.

B. The CONTRACTOR shall establish permanent Site reference and survey control points prior to starting the Work.

3.02 SURVEY REQUIREMENTS

A. All horizontal and vertical control coordinates (i.e., Northings, Eastings, and elevations) of benchmarks and survey control points shall be determined (and recorded) with a maximum permissible error of ±0.10 foot in any horizontal coordinate and ±0.01 foot in any vertical coordinate.

B. All horizontal and vertical control coordinates are to be referred to the Pennsylvania State Plane Coordinate System and referred to the nearest USGS benchmark, respectively.

C. Survey and clearly mark the limits of all Work areas.

D. The CONTRACTOR shall reference all survey and data reference points to permanent benchmarks and record the locations of survey control points, with horizontal and vertical data, on the Project Record Documents.

E. The CONTRACTOR shall re-verify layouts periodically during construction by the same means as the original layout.

F. Pre-construction surveys shall be performed in the construction area to establish baseline grade elevations. Surveys results shall be provided to the ENGINEER prior to mobilization onto the Site and within ten (10) days after the date of commencement as stated in the Notice to Proceed. No payment will be made for the excavation of materials placed on-Site by the CONTRACTOR.

*****END OF SECTION*****

SECTION 01200

PROJECT MEETINGS

PART 1 - GENERAL

1.01 DESCRIPTION OF WORK

A. The Work under this Section includes all scheduling and administering of Pre-construction and Progress Meetings, as specified herein, and necessary for the proper and complete performance of the Work.

B. Scheduling and administration by the ENGINEER shall include the following:

1. Prepare an agenda for each meeting;
2. Make time arrangements for the meetings;
3. Preside at the meetings;
4. Record minutes and include significant proceedings and decisions; and,
5. Distribute copies of the minutes to participants within five (5) working days after each meeting.

C. The CONTRACTOR shall make physical arrangements for meetings. Representatives of the CONTRACTOR, SUBCONTRACTORs, Installers, and suppliers attending the meetings shall be qualified and authorized to act on behalf of the entity each represents. The ENGINEER will ascertain that the Work is expedited consistent with the Contract Documents and the Construction Schedule.

1.02 PRE-CONSTRUCTION MEETING

A. The OWNER's REPRESENTATIVE shall schedule the Pre-construction meeting following issuance of the Notice to Proceed.

B. Representatives of the following parties are to be in attendance at the meeting:

1. CONTRACTOR and Superintendent.
2. Major SUBCONTRACTORs.
3. Representatives of governmental or regulatory agencies, if appropriate.
4. ENGINEER
5. OWNER's REPRESENTATIVE.

C. The agenda for the Pre-construction meeting shall include, at a minimum, the following:

1. Distribute and discuss a list of major SUBCONTRACTORs/suppliers and a tentative Construction Schedule;
2. Critical path work sequencing;
3. Designation of responsible personnel and emergency telephone numbers;
4. Processing of Field Change Orders;
5. Adequacy of distribution of Contract Documents;

6. Schedule and submittal of Shop Drawings, product data and samples;
7. Format for Application for Payment, submittal cutoff date, pay date and retainage;
8. Procedures for maintaining Project Record Documents;
9. Use of premises, including office and storage areas, and the requirements of the ENGINEER and regulatory agencies;
10. Major equipment deliveries and priorities;
11. Site-specific Health and Safety Plan requirements;
12. Contingency Plan requirements;
13. Security procedures;
14. Housekeeping procedures;
15. Work hours; and,
16. Site access, traffic maintenance and control, and laydown/storage areas.

1.03 PROGRESS MEETINGS

A. Schedule regular weekly (or other appropriate frequency) meetings as directed by the ENGINEER and to be held on-Site.

B. Hold called meetings as the progress of the Work dictates.

C. The meetings shall be held at the location provided by the CONTRACTOR.

D. Representatives of the following parties are to be in attendance at the meetings:

1. CONTRACTOR and Superintendent;
2. Major SUBCONTRACTORs as pertinent to the agenda;
3. ENGINEER;
4. Representatives of governmental or other regulatory agencies, as appropriate; and,
5. OWNER's REPRESENTATIVE.

E. The minimum agenda for Progress Meetings shall include the following:

1. Review and approve minutes of previous meetings;
2. Review Work progress since last meeting;
3. Note field observations, problems and decisions;
4. Identify problems which impede Construction Schedule;
5. Review off-Site fabrication problems and product delivery schedule;
6. Review the CONTRACTOR's corrective measures and procedures to regain planned Construction Schedule, if applicable;
7. Review submittal schedule; expedite as required to maintain Construction Schedule;
8. Maintenance of quality and work standards;
9. Review construction safety issues;
10. Review proposed changes for their effect on the Construction Schedule and completion date; and,
11. Complete other current business.

1.04 APPLICATION FOR PAYMENT MEETINGS

A. Schedule meeting for Applications for Payment as required by the Contract Documents or as requested.

B. Representatives of the following parties are to be in attendance at the meetings:

1. CONTRACTOR and Superintendent;
2. ENGINEER; and,
3. OWNER's REPRESENTATIVE.

PART 2 - PRODUCTS

Not Used.

PART 3 - EXECUTION

Not Used.

*****END OF SECTION*****

SECTION 01300

SUBMITTALS

PART 1 - GENERAL

1.01 DESCRIPTION OF WORK

A. Wherever submittals are required hereunder and elsewhere in the Contract Documents, all such submittals by the CONTRACTOR shall be submitted to the ENGINEER.

B. Any details deemed by the CONTRACTOR to be required for the Work, but not indicated in the Contract Documents, shall be submitted by the CONTRACTOR for review by the ENGINEER at least twenty-five (25) calendar days prior to the construction of that portion of the Work. Identifying any such details is the responsibility of the CONTRACTOR.

1.02 SITE MANAGEMENT PLAN

A. Prior to mobilization onto the Site and (except where noted otherwise below) within ten (10) days after the date of commencement as stated in the Notice to Proceed, the CONTRACTOR shall submit a Site Management Plan, which shall include:

1. Preliminary Construction Schedule that indicates the starting and completion dates for the various phases of each Work Zone and includes sequencing and methods, labor and equipment, loading, float time, and critical path analysis. A chart showing major milestones and duration of activities should be included. The Construction Application for Payment, as indicated in Article 1.05.
2. An existing conditions survey including identification of Site reference and survey points.
3. A preliminary schedule of submittals including Shop Drawing, sample, and proposed substitute or "or equal" submittals. The CONTRACTOR shall thoroughly read each section of the Specifications and carefully review the Contract Drawings and reference the appropriate section of the Specifications for each submittal. The submittals comprising the schedule shall be numbered in a systematic and logical fashion that allows for future additions or deletions. This schedule shall be a prerequisite to the first Application for Payment.
4. Preliminary schedule of potential applicable permits and approvals, which may be required to perform the Work.
5. Liquids Handling and Disposal Plan in accordance with Section 02402 of these Specifications.
6. Site Access and Traffic Control Plan in accordance with Section 01550 of these Specifications.
7. Site Security Plan in accordance with Section 01540 of the Specifications.

8. Detailed Site-specific Health and Safety Plan developed in accordance with all applicable laws and regulations, OSHA 29 CFR 1910 and 1926, and Section 01564 of these Specifications, including a Contingency Plan described in Section 01563.
9. Soil Erosion and Sediment Control Plan in accordance with Section 02125 of these Specifications.
10. Qualifications as the Remedial Action Contractor and key subcontractors, in accordance with the requirements of the Consent Decree, for submittal to the USEPA.
11. A Contractor Quality Control Plan (CQCP) that identifies the CONTRACTOR's Quality Control Inspector and presents the test methods the CONTRACTOR will use to document compliance with the Contract Documents and ensure the system will meet the design requirements.
12. A Schedule of Values in accordance with Section 01026 of the Specifications.

1.03 PROGRESS REPORTS

A. Three (3) copies of written monthly Progress Reports are required to be submitted by the OWNER to USEPA and PADEP by the tenth working day of every month, as described in the Consent Decree. The ENGINEER shall submit three (3) copies of a Progress Report to the OWNER's REPRESENTATIVE by the third working day of every month, beginning with the second calendar month following the award of contract. The Progress Report shall include the following:

1. A brief description of the activities undertaken by the CONTRACTOR during the previous month, including actual start dates and completion dates, as applicable;
2. Results of any sampling, tests, and any other data received by the CONTRACTOR in the previous month;
3. Copies of permit applications, permits issued, and a brief description or copies of significant items of correspondence with third parties;
4. Identification of all submittals required, completed, and submitted to the ENGINEER during the previous month;
5. A description of all actions which are scheduled for the next month and other information relating to the progress of construction including critical path diagrams and Gantt charts;
6. Information regarding percentage of completion, unresolved delays encountered or anticipated that may affect the future construction schedule, and a description of efforts made to mitigate those delays or anticipated delays;
7. Modifications or proposed modifications to the construction schedule or sequence of activities contained in the Contractor Site Management Plan.

1.04 SHOP DRAWING SUBMITTALS

A. Furnish at least four (4) copies for each set of Shop Drawings submitted. The ENGINEER will require four copies, leaving one (1) copy of marked-up reviewed Shop Drawings for return to the CONTRACTOR. The words "Shop Drawing(s)," as used herein, shall be understood to include detailed signed calculations; fabrication, installation, and erection drawings; lists; graphs; operating instructions; catalog sheets; data sheets; and all other similar items. If the CONTRACTOR wishes to receive more than one (1) copy of marked-up reviewed Shop Drawings, submit additional copies beyond the minimum three 3 copies, up to a maximum of five (5) copies.

B. All Shop Drawing submittals shall be accompanied by the ENGINEER's standard submittal transmittal form that may be obtained from the ENGINEER. Any submittal not accompanied by such a form, or where all applicable items on the form are not completed, will be returned for revision and resubmittal.

C. Normally, a separate transmittal form shall be used for each specific item or class of material or equipment for which a submittal is required. Transmittal of a submittal of various items using a single transmittal form will be permitted only when the items taken together constitute a manufacturer's "package" or are so functionally related that expediency indicates review of the group or package as a whole. A multiple-page submittal shall be collated into sets, and each set shall be stapled or bound, as appropriate, prior to transmittal to the ENGINEER.

D. Submittals must be clearly legible. When only a particular portion of a standard-issue material, such as a manufacturer's catalog or data sheet, is relevant to a submittal, the relevant portion(s) must be clearly indicated on all copies and all non-relevant portion(s) must be struck through on all copies.

E. Except as may otherwise be provided herein, the ENGINEER will return each submittal to the CONTRACTOR with its comments noted thereon, within fifteen (15) calendar days following their receipt by the ENGINEER. One (1) copy will be returned to the CONTRACTOR, plus any extra copies submitted as described in Article 1.04A above. It is considered reasonable that the CONTRACTOR shall make a complete and acceptable submittal to the ENGINEER by either the first or second submission of a submittal item. The OWNER reserves the right to withhold monies otherwise due the CONTRACTOR to cover additional costs of the review beyond the second submittal. Any consequences or delays due to unacceptable submittals will not be cause for extensions in schedule or additional cost.

F. If the submittal is returned to the CONTRACTOR marked "NO EXCEPTIONS TAKEN," formal revision and resubmission of said submittal will not be required.

G. If the submittal is returned to the CONTRACTOR marked "MAKE CORRECTIONS NOTED," formal revision and resubmission of said submittal will not be required. Record Drawings must reflect corrections.

H. If the submittal is returned to the CONTRACTOR marked "AMEND-RESUBMIT," the CONTRACTOR shall revise said submittal and shall resubmit the required number of copies of said revised submittal to the ENGINEER.

I. If the submittal is returned to the CONTRACTOR marked "REJECTED-RESUBMIT," the CONTRACTOR shall revise said submittal and shall resubmit the required number of copies of said revised submittal to the ENGINEER.

J. Fabrication of an item may begin only after the ENGINEER has favorably reviewed the pertinent submittals and returned the said submittals to the CONTRACTOR marked either "NO EXCEPTIONS TAKEN" or "MAKE CORRECTIONS NOTED." Corrections indicated on submittals shall be considered as changes necessary to meet the requirements of the Contract Documents and shall not be taken as the basis of claims for extra work or payment. Items fabricated without prior favorable review will not qualify for payment.

K. All CONTRACTOR Shop Drawing submittals shall be carefully reviewed by an authorized representative of the CONTRACTOR, prior to submission to the ENGINEER. Each submittal shall be dated, signed, and certified by the CONTRACTOR, as being correct and in strict conformance with the Contract Documents. In the case of Shop Drawings, each copy shall be so dated, signed, and certified. The ENGINEER will not review any CONTRACTOR submittals, which have not been so certified by the CONTRACTOR, or are incomplete, or not well-organized or indexed. All non-certified, incomplete, or unorganized submittals will be returned to the CONTRACTOR without action taken by the ENGINEER, and any delays caused thereby shall be the total responsibility of the CONTRACTOR.

L. The ENGINEER's favorable review of CONTRACTOR's Shop Drawing submittals shall not relieve the CONTRACTOR of the entire responsibility for the correctness of details and dimensions and the overall adequacy of the submitted design, product, method, process, appurtenance, or similar. The CONTRACTOR shall assume all responsibility and risk for any misfits due to any errors in the CONTRACTOR's submittals. The CONTRACTOR shall be responsible for the dimensions and the design of adequate connections and details and for provision of all items and appurtenances necessary for complete and satisfactory Work.

1.05 CONTRACTOR'S CONSTRUCTION SCHEDULE SUBMITTALS

A. All Construction Schedule submittals by the CONTRACTOR shall include paper plots for use in schedule analysis by the ENGINEER.

B. The CONTRACTOR shall revise the Construction Schedule, as required, and resubmit the schedule with each Application for Payment. Any Application for Payment submitted without an up-to-date Construction Schedule will not be processed.

C. The CONTRACTOR shall show, with the complete application of each Work Zone, phase(s) within each Work Zone, and sequence and methods of construction by activity, identifying the Work in each Zone and separate phases and other logically grouped activities. Indicate the early and late start, early and late finish, float dates, critical path, and duration.

D. The CONTRACTOR shall indicate the estimated percentage of completion for each activity with each Application for Payment.

E. The CONTRACTOR shall indicate the submittal dates required for Shop Drawings, product data, samples, and product delivery dates, including those furnished by the OWNER, if any.

1.06 PROPOSED SUBSTITUTES OF "OR EQUAL" ITEMS

A. Whenever materials or equipment are specified or described in the Contract Documents by using the name of a proprietary item, or the name of a particular supplier, the naming of the item is intended to establish the type, function, and quality required. If the words "or equal" or "or equivalent" are not present, no substitutes will be allowed, whether or not such disallowance is specifically stated. If the name is followed by the words "or equal" or "or equivalent" indicating that consideration of a substitution is permitted, materials or equipment of other suppliers may be accepted by the ENGINEER if sufficient information is submitted by the CONTRACTOR to allow the ENGINEER to determine that the material or equipment proposed is equivalent, or equal to, that named, subject to the following requirements:

1. The burden of proof as to the type, function, and quality of any such substitute material or equipment shall be upon the CONTRACTOR.
2. The ENGINEER will be the sole judge as to the type, function, and quality of any such substitute material or equipment and the ENGINEER's decision shall be final.
3. The ENGINEER may require the CONTRACTOR to furnish, at the CONTRACTOR's expense, additional data about the proposed substitute.
4. The ENGINEER may require the CONTRACTOR to furnish, at the CONTRACTOR's expense, a special performance guarantee or other surety with respect to any substitution.
5. Acceptance by the ENGINEER of a substitute item proposed by the CONTRACTOR shall not relieve the CONTRACTOR of the responsibility for full compliance with the Contract Documents and for adequacy of the substitute item.
6. The CONTRACTOR shall be responsible for any resultant changes and all additional costs which the accepted substitution requires in the CONTRACTOR's work, the work of its SUBCONTRACTORs and of others, and shall effect such changes at the CONTRACTOR's expense. Such changes include, but are not limited to, changes in dimensions, locations, piping, fittings, clearances, electrical connections, sizing of equipment and appurtenant items, controls, alarms, and instrumentation.
7. All proposed substitutions shall be listed at the time of bidding and as called for in Article 1.02A herein above.

B. The procedure for review by the ENGINEER will consist of the following:

1. If the CONTRACTOR wishes to furnish or use a substitute item of material or equipment, the CONTRACTOR shall make written application to the ENGINEER.
2. Unless otherwise provided by law or authorized in writing by the ENGINEER, the substitution request shall be submitted with the Bid and again within the ten (10) day period after receiving Notice to Proceed.
3. Wherever a proposed substitute material or equipment has not been submitted within said period, or wherever the submission of a proposed substitute material or equipment has been judged to be unacceptable by the ENGINEER, the CONTRACTOR shall provide the material or equipment named in the Contract Documents.
4. The CONTRACTOR shall certify that the proposed substitute will adequately perform the functions and achieve the results called for by the general design, be similar and of equal substance to that specified, and be suited to the same use as that specified.
5. The ENGINEER will be allowed a reasonable time within which to evaluate each proposed substitute, which can be longer than the time period set forth in Article 1.04E herein above without providing any basis for an extension of time or additional costs. In any event, the ENGINEER will endeavor to complete his review in no more than twenty-five (25) calendar days from receipt of submittal.
6. As applicable, no Shop Drawing submittals will be made for a substitute item nor shall any substitute item be ordered, installed, or utilized without the ENGINEER's prior written favorable review of the CONTRACTOR's substitution request.
7. The ENGINEER will record the time and expenses required by the ENGINEER to evaluate substitutions proposed by the CONTRACTOR and to make changes in the Contract Documents occasioned thereby. Whether or not the ENGINEER favorably reviews a proposed substitute, the CONTRACTOR shall reimburse the ENGINEER for the charges of the ENGINEER for evaluating each proposed substitute, except to the extent that there is a net savings in cost following adoption of the substitution.

C. The CONTRACTOR's application for a proposed substitute shall contain the following statements and/or information that will be considered by the ENGINEER in evaluating the proposed substitution:

1. The evaluation and acceptance of the proposed substitute will not prejudice the CONTRACTOR's achievement of substantial completion on time.
2. Whether acceptance of the substitution for use in the Work will require a change in any of the Contract Documents to adapt the design to the proposed substitute.
3. Whether incorporation or use of the substitute in connection with the Work is subject to payment of any license fee or royalty.
4. All variations of the proposed substitute from that specified shall be identified.

5. Available maintenance, repair, and replacement service shall be indicated.
6. Itemized list of all costs that will result directly or indirectly from acceptance of such substitute, including cost of redesign and claims of other contractors affected by the resulting change.

D. Any tests performed by the ENGINEER or QUALITY ASSURANCE OFFICIAL to verify acceptability of substitutes shall be at the CONTRACTOR's sole expense.

1.07 SAMPLES SUBMITTAL

A. Whenever in the Contract Documents samples are required, the CONTRACTOR shall submit, at his expense, not fewer than five (5) samples of each such item or material to the ENGINEER.

B. Samples, as required herein, shall be submitted for acceptance a minimum of twenty-one (21) days prior to ordering such material, and shall be submitted in an orderly sequence so that dependent materials or equipment can be assembled and reviewed without causing delays in the Work.

C. All samples shall be individually, legibly, and indelibly labeled or tagged, indicating thereon all specified physical characteristics and Supplier's name. Upon receiving acceptance of the ENGINEER, one (1) set of the samples will be stamped and dated by the ENGINEER and returned to the CONTRACTOR and the remaining two (2) sets will be retained by the ENGINEER with one (1) set retained at the Site until completion of the Work.

D. Unless otherwise specified, all colors and textures of specified items will be selected by the ENGINEER from the manufacturer's standard colors and standard materials, products, or equipment lines.

1.08 AS-BUILT DRAWINGS SUBMITTAL

A. The CONTRACTOR shall keep and maintain at the Site, one set of As-Built Drawings. On these, the CONTRACTOR shall mark all project conditions, locations, configurations, and any other changes or deviations which may vary from the details represented on the Contract Drawings, including buried or concealed construction and utility features which are revealed during the course of construction. Special attention shall be given to recording the horizontal and vertical location of all buried utilities that differ from the locations indicated, or which were not indicated on the Contract Drawings. Said Record As-Built Drawings shall be supplemented by any detailed sketches, as necessary, or directed to fully indicate the Work as actually constructed. Include all survey data obtained from potholing and exposing of existing buried piping. These master Record Drawings of the CONTRACTOR's representation of as-built conditions, including all revisions made necessary by Addenda, Change Orders, and the like, shall be maintained up-to-date during the progress of the Work. One set of As-Built Drawings shall be submitted to the ENGINEER with each Application for Payment. All as-built survey documentation shall meet the requirements of Section 01050 of these Specifications.

B. As-Built Drawings shall be accessible to the ENGINEER at all times during the construction period and shall be delivered to the ENGINEER upon completion of the Work.

C. Upon substantial completion of the Work, and prior to final acceptance, the CONTRACTOR shall complete and deliver twelve (12) complete sets and one (1) electronic (AutoCAD format) set of Record As-Built Drawings to the ENGINEER. Record As-Built Drawings shall conform to the construction records of the CONTRACTOR. The Record As-Built Drawings shall consist of Contract Drawings showing relevant corrections, modifications, and/or amendments, which accurately and fully report the location of the Work as constructed. The information submitted by the CONTRACTOR will be assumed to be reliable, and the ENGINEER and the OWNER's REPRESENTATIVE will not be responsible for the accuracy of such information, nor for any errors or omissions, which may appear on the Record As-Built Drawings as a result.

D. As-Built Drawings submitted by the CONTRACTOR shall be sealed and signed by a professional (civil) engineer licensed in the Commonwealth of Pennsylvania. Final survey locations, elevations, and grades shall be sealed and signed by a Land Surveyor licensed in the Commonwealth of Pennsylvania.

1.09 MANUFACTURER'S INSTRUCTIONS

A. For all equipment, special items, and materials as specified in individual Sections of these Specifications, submit five (5) copies of the manufacturer's printed warranties, instructions for delivery, storage, assembly, installation, start-up, adjusting, finishing, and spare parts list. All warranties shall be in the OWNER's name where applicable.

B. Identify conflicts between manufacturer's instructions and the Contract Documents.

1.10 MANUFACTURER'S CERTIFICATES

A. When specified in individual Section of these Specifications, submit five (5) copies of manufacturer's certificates to the ENGINEER for review.

B. Indicate that the material or product conforms to or exceeds specified requirements. Submit supporting reference data, affidavits, and certifications as appropriate.

C. Certificates may be recent or previous test results on the same materials or products, if acceptable to the ENGINEER, unless current test results are called for in the Contract Documents.

D. For all equipment and specialist materials, submit manufacturer's warranties and certifications together with vendor confirmation of assignment of all warranty rights to the OWNER, including full warranty period commencing from the date of final completion and acceptance of the Work by the OWNER.

1.11 TECHNICAL MANUAL SUBMITTAL

A. The CONTRACTOR shall furnish the ENGINEER with ten (10) identical sets of Technical Manuals, also referred to as O&M Manuals, for all mechanical, electrical, and instrumentation equipment, two (2) of which shall be transmitted to the OPERATOR. Each set shall consist of one or more volumes, each of which shall be bound in a standard size, 3-ring, loose leaf, and vinyl plastic hard cover binder suitable for bookshelf storage. A binder's ring size shall not exceed 3 inches. The contents of the Technical Manual(s) shall be well organized to ENGINEER's satisfaction and subsections shall be separated with dividers. A table of contents shall be provided which indicates all equipment and related information bound in the Technical Manuals. An electronic copy shall be provided in a current version of Microsoft Word.

B. For each item requiring submittal of a Technical Manual, the CONTRACTOR shall include the following as appropriate:

1. Complete operating instructions, including location of controls, special tools or other equipment required, related instrumentation, and other equipment needed for operation.
2. Lubrication schedules, including the lubricant SAE grade and type, temperature range of lubricants, and including frequency of required lubrication.
3. Preventative maintenance procedures and schedules.
4. Parts lists, by generic title and identification number, complete, with exploded views of each assembly.
5. Instruction for disassembling and reassembling.
6. Name and location of nearest supplier and spare parts warehouse.
7. Recommended troubleshooting procedures.
8. Reproducible prints of the Record Drawings, including diagrams and schematics, as required under Divisions 15 and 16 of these Specifications.
9. Submittal information for control panels, including panel layout, wiring diagrams and instrumentation, as presented in Section 16900.
10. Product data for electrical components as presented in Section 16050.
11. Detailed installation, operation, and maintenance information for all equipment required under Division 11.
12. Product data for all conveyance piping components, including pipes, valves, flow meters, and enclosures.

C. Technical Manuals shall be submitted in final form to the ENGINEER not later than the 75 percent construction completion date unless otherwise stated in the Contract Documents. All discrepancies or deficiencies found by the ENGINEER in the Technical Manuals shall be corrected by the CONTRACTOR within twenty-eight (28) days from the date of written notification of the deficiencies.

1.12 SPARE PARTS LIST SUBMITTALS

A. The CONTRACTOR shall furnish the ENGINEER with ten (10) identical sets of Spare Parts Lists for all mechanical, electrical, and instrumentation equipment,

two (2) of which shall be transmitted to the OPERATOR. The Spare Parts Lists shall include the current list price of each spare part. Each manufacturer or supplier shall indicate the name, address, and telephone number of its nearest outlet of spare parts to facilitate the OPERATOR in ordering. The CONTRACTOR shall cross-reference all spare parts list to the equipment numbers designated in the Contract Documents. The spare parts lists shall be bound in standard size, 3-ring, loose leaf, and vinyl plastic hard cover binders suitable for bookshelf storage. A binder's ring size shall not exceed 3 inches. An electronic copy shall be provided in a current version of Microsoft Word.

1.13 EXCAVATION SUPPORT PLAN SUBMITTAL

A. Prior to commencement of any Work requiring excavation to a depth in excess of the threshold limits of the OSHA regulations, the CONTRACTOR shall submit a detailed Excavation Support Plan to the ENGINEER for review. This plan shall be designed and sealed by a Professional Engineer licensed in the Commonwealth of Pennsylvania. The plan should include the design of any sheeting, shoring, bracing, sloping, or equivalent support method and in accordance with the requirements of Section 02150 of these Specifications. If so required, the plan shall include appropriate measures to provide dewatering in accordance with Section 02140 and 02402 of these Specifications. The CONTRACTOR shall be in receipt of the OWNER's and ENGINEER's written acceptance of the plan prior to initiation of any excavation.

1.14 DECONTAMINATION/OFF-SITE DISPOSAL

A. Prior to performing any excavation activities, which will result in the decontamination and off-site disposal of any above or below ground structures, utilities, or waste (e.g., areas previously identified on the Northwest-South Fill), the CONTRACTOR shall submit a detailed schedule of proposed activities to the ENGINEER for review. This schedule shall include the means and methods of decontamination and the off-site facility where the materials will be shipped. After disposal, the CONTRACTOR shall submit a copy of the disposal manifest to the QUALITY ASSURANCE OFFICIAL and the ENGINEER.

1.15 LIST OF EQUIPMENT AND PERSONNEL (FOR EXTRA WORK)

A. The CONTRACTOR shall provide the ENGINEER with a listing of all construction equipment and construction personnel tabulated by day. This listing shall be compatible with Microsoft Excel format and be provided electronically, as requested.

1. The list of construction equipment shall include the manufacturer, model number, hours used, and component of the Work performed for all equipment on-site.
2. The list of construction personnel shall include employee name, job classification, hours worked, and component of the Work performed for all of the CONTRACTOR's employees and SUBCONTRACTORs not otherwise considered Site overhead.

3. Health and Safety training certifications in accordance with the requirements of Section 01564 of these Specifications.

B. The listing of construction equipment and construction personnel shall be submitted with each Application for Payment or submitted to the ENGINEER for review prior to mutual agreement regarding the Application for Payment. Any Applications for Payment without a complete listing of equipment and personnel will not be processed.

1.16 DAILY REPORTS

A. The CONTRACTOR shall prepare daily reports summarizing on-site activities. They shall be compatible with a recent version of Microsoft Word and be made available electronically.

B. Daily reports shall include as a minimum the following information:

1. Weather conditions;
2. Active work area;
3. Crew description;
4. SUBCONTRACTOR activity;
5. Equipment operating;
6. Hours worked;
7. Work performed;
8. Problems;
9. Health and safety issues;
10. Visitors;
11. Photographs taken;
12. Sampling/testing performed; and,
13. Air monitoring data.

C. Daily reports shall be submitted to the ENGINEER the working day following the report day.

1.17 WEEKLY MEETING MINUTES

A. The ENGINEER will complete the minutes of weekly meetings.

PART 2 - PRODUCTS

Not Used.

PART 3 - EXECUTION

Not Used.

*****END OF SECTION*****

SECTION 01400

QUALITY CONTROL

PART 1 - GENERAL

1.01 DESCRIPTION OF WORK

A. The Work under this Section includes the CONTRACTOR's responsibility for providing all Quality Control testing and inspection as necessary for the proper and complete performance of the Work.

B. The CONTRACTOR shall comply with the Quality Control testing and inspection requirements herein and as otherwise specified in individual Sections of these Specifications.

1.02 RELATED SECTIONS

A. Submittals – Section 01300

B. Erosion and Sedimentation Control – Section 02125

C. Backfill and Fill – Section 02223

D. Soil – Section 02224

E. Vegetative Layer – Section 02225

F. Aggregate Materials – Section 02233

G. Stone Riprap – Section 02274

H. Geotextile – Section 02595

I. LLDPE Geomembrane – Section 02597

J. Geocomposite – Section 02598

K. HDPE Pipe – Section 02650

L. Soil Vapor Extraction Wells – Section 02433

M. Monitoring Wells – Section 02675

1.03 QUALITY ASSURANCE/CONTROL OF INSTALLATION

A. The CONTRACTOR shall monitor quality control over products, services, Site conditions, and workmanship for conformance with the Contract Documents.

B. The CONTRACTOR shall comply fully with manufacturers' instructions, including each step in any prescribed sequence.

C. Should the manufacturers' instructions conflict with the Contract Documents, the CONTRACTOR shall request clarification from the ENGINEER before proceeding.

D. The CONTRACTOR shall comply with specified standards as a minimum quality for the Work except when more stringent tolerances, codes, or specified requirements indicate higher standards or more precise workmanship.

E. The CONTRACTOR shall perform Work with persons qualified to produce workmanship of specified quality.

1.04 REFERENCES

A. Conform to the reference standard that is in effect as of the date for receiving bids.

B. Obtain copies of specified standards when required by the Contract Documents.

C. Should specified reference standards conflict with the Contract Documents, request clarification from the ENGINEER before proceeding.

D. The contractual relationship of the parties to the Contract shall not be altered from the Contract Documents by either mention or inference in any reference document.

1.05 INSPECTION AND TESTING LABORATORY SERVICES

A. The CONTRACTOR is responsible for performing and documenting all Quality Control tests. The OWNER will be responsible for any quality assurance testing.

B. The ENGINEER or CONTRACTOR will perform inspections, tests, and services as required by these Specifications.

C. Reports will be submitted by the CONTRACTOR to the ENGINEER, indicating observations and results of tests and indicating compliance or non-compliance with the Contract Documents.

D. The CONTRACTOR, when required, shall cooperate with the ENGINEER to furnish samples of materials, design mixes, equipment, tools, storage and assistance as requested.

1. Notify the ENGINEER twenty-four (24) hours prior to the expected time for operations requiring services.
2. Make arrangements with the ENGINEER and pay for additional samples and tests required for the CONTRACTOR's use.

E. Re-testing or re-inspection required because of non-conformance to the specified requirements shall be performed by the CONTRACTOR on instructions by the ENGINEER. Payment for re-testing or re-inspection will be charged to the CONTRACTOR by deducting inspection or testing charges from the Contract Price.

PART 2 - PRODUCTS

Not Used.

PART 3 - EXECUTION

Not Used.

*****END OF SECTION*****

SECTION 01540

JOB SITE SECURITY

PART 1 - GENERAL

1.01 DESCRIPTION OF WORK

A. The CONTRACTOR shall be responsible for all job Site security. Whenever evidence is found of damage to the Work, the CONTRACTOR shall immediately remove the damaged portion and replace it with satisfactory Work at the CONTRACTOR's expense. A copy of all accident reports shall be submitted to the ENGINEER within twenty-four (24) hours or the next business day.

B. The CONTRACTOR shall keep a daily record of personnel and visitors on-Site including arrival and departure times. Provide records to the ENGINEER on a weekly basis.

C. The CONTRACTOR's responsibility for the maintenance of job Site security shall not cease until the Work has been accepted by the OWNER.

D. Should vandalism occur or evidence of trespassers be discovered, CONTRACTOR shall notify the local police and the ENGINEER. If vandalism begins to affect the construction schedule or quality of the Work, CONTRACTOR shall take measures, at no additional cost to the OWNER, to increase security. In any event, CONTRACTOR shall store all equipment and materials with a fenced portion of the Site, whenever possible.

1.02 BARRICADES, LIGHTS, AND SIGNALS

A. The CONTRACTOR shall furnish and erect such barricades, fences, flagmen, watch guards, lights, and danger signals, and shall provide such other precautionary measures to protect persons, property, and the Work as necessary to comply with Federal, State, and local regulations. Barricades shall be painted in a color, or utilize other measures, to ensure visibility at night. From sunset to sunrise, the CONTRACTOR shall furnish and maintain at least one operable light at each barricade, and sufficient numbers of barricades shall be erected to keep vehicles from being driven on, and persons from walking under or into, construction areas.

B. Damage to the Work due to failure of barricades, signs, and lights is the sole responsibility of the CONTRACTOR, and whenever evidence is found of such damage to the Work, the CONTRACTOR shall immediately remove the damaged portion and replace it at CONTRACTOR's expense. The CONTRACTOR's responsibility for the maintenance of barricades, signs, and lights shall not cease until the Work has been accepted by the OWNER.

C. The CONTRACTOR shall control vehicle access, in accordance with Section 01550 of these Specifications at all times when the Work is in progress. At the end of each workday, the CONTRACTOR shall secure access to the each Site and provide security as specified herein.

1.03 SITE ACCESS, SECURITY, AND RESTRICTIONS

A. Immediately following issuance of the Notice to Proceed, the CONTRACTOR shall assume the responsibility and cost of Site security through the completion of the Work, including periods of no construction activity. This includes, but is not limited to, access control, installation of temporary protective fencing and gates (as required), fence inspection and repair, barricades around excavated areas, and other necessary measures to restrict public access to these designated areas until the Work is completed.

B. The CONTRACTOR shall coordinate with the ENGINEER to establish guidelines for personnel access to the Site.

1.04 SUBMITTALS

A. The CONTRACTOR shall submit, a Site Security Plan to the ENGINEER for a favorable review, within ten (10) days after the Notice to Proceed, and prior to mobilization onto the Site.

PART 2 - PRODUCTS

Not Used.

PART 3 - EXECUTION

Not Used.

*****END OF SECTION*****

SECTION 01550

SITE ACCESS AND TRAFFIC CONTROL

PART 1 - GENERAL

1.01 DESCRIPTION OF WORK

A. The CONTRACTOR shall furnish all materials, labor, equipment, tools, and appurtenances required to maintain site access and traffic control. Traffic congestion around the Site shall be minimized to maintain public safety, and to avoid the potential for complaints from the public.

B. The CONTRACTOR shall comply will all applicable codes, ordinances, rules, regulations and laws of local, municipal, State, and Federal authorities having jurisdiction. This includes, but is not limited to, compliance with all traffic laws and with vehicular weight and axle-loading limitations.

C. The CONTRACTOR's responsibility for the maintenance of site access and traffic control shall not cease until the Work has been accepted by the ENGINEER.

D. The CONTRACTOR shall provide a "Competent Person" to implement, supervise, and inspect all Work.

E. The CONTRACTOR should take note that the Site may be within a school zone and special restrictions may apply.

1.02 RELATED SECTIONS

A. Project Coordination – Section 01041

B. Submittals – Section 01300

C. Job Site Security – Section 01540

1.03 SUBMITTALS

A. Within ten (10) days after the Notice to Proceed, and prior to mobilization onto the Site, the CONTRACTOR shall develop and submit to the ENGINEER a Site Access and Traffic Control Plan in accordance with the requirements of Section 01300 of these Specifications, and as specified herein.

B. The Site Access and Traffic Control Plan shall include, but not be limited to, proposed traffic patterns and layouts, required traffic control devices (i.e., signs, barricades, cones, etc.) and utilization, hours of operation, and other associated details for the proper maintenance and protection of traffic.

PART 2 - PRODUCTS

Not Used.

PART 3 - EXECUTION

3.01 SITE ACCESS

A. All traffic shall access the Site from Phoenixville Pike as shown on the Contract Drawings. The CONTRACTOR may make arrangements for alternate access provisions with the ENGINEER.

B. The CONTRACTOR shall coordinate Site access with the ENGINEER. This includes, but is not limited to, scheduling of deliveries and available working hours.

C. WILLIAMS TRANSCO PIPELINE EASEMENT - Access is restricted within the limits of this right of way.

1. Vehicle access is restricted to the designated access roads on the Contract Documents. The access roads must be constructed and repaired to maintain the minimum cover over the gas pipelines.
2. No storage of materials or stockpiling is permitted
3. No parking of construction equipment is permitted
4. All activities within the right of way must be conducted under direct oversight of a Transco representative.

3.02 OFF-LOADING

A. Coordinate with the ENGINEER to select the areas to be used for off-loading and temporary storage of materials. Clearly delineate the boundary of all storage and laydown areas.

B. To reduce tracking of soils back on to the roads, dumping of soils should be done in a manner that minimizes wheel contact with the soils. Off-loading of materials on the Work Areas shall be coordinated with construction of temporary access roads to minimize tracking of landfill soils. If tracking of soil onto public roads from the CONTRACTOR's operations is severe in the opinion of the ENGINEER, the CONTRACTOR shall take action such as constructing a wheel-washing station or installation of gravel tracking pads as required.

3.03 COVERING OF MATERIALS

A. The CONTRACTOR shall take such steps as necessary to prevent spillage, wind blown deposits on the roads, and damage to other vehicles. All trucks used for transport of soils shall be covered with a well-secured tarp before transportation on public roads.

B. After dumping the load at the Site, the CONTRACTOR shall inspect the truck bed for residual materials and shall remove or cover residual material before allowing the truck to leave the Site and entering public roads.

3.04 STREET CLEANING

A. The street shall be cleaned a minimum of once per day, or as needed, during excavation activities.

B. Remove all soils, dirt, rock, asphalt and other deposits that accumulate on the public roads that are a result of the CONTRACTOR's hauling operation. This includes windblown deposits, spillage, and materials tracked onto the roads. Removal shall be accomplished by sweeping and washing as required.

C. Inspection of the roads is to be performed by the CONTRACTOR at least daily during hauling operations. When the inspection determines that cleaning is required, or as directed by the ENGINEER, the CONTRACTOR shall immediately perform such cleaning.

3.05 TRAFFIC CONTROL

A. The CONTRACTOR shall not impair traffic on public or private roads.

B. Access to the Lupo residence must be maintained as per the approved access agreement between the parties.

C. The CONTRACTOR shall maintain the current level-of-service on public roads in proximity to the Site. Provide flagmen or other means of traffic control when and where necessary, or when requested by the ENGINEER, to avoid interruptions to the current level-of-service and adverse impacts or delays to the Work.

3.06 ON-SITE TRANSPORTATION

A. The control of on-Site traffic is the CONTRACTOR's sole responsibility and shall be performed in a safe and orderly manner. A speed limit of 10 MPH shall be enforced by the CONTRACTOR on all vehicles and equipment on the Site.

B. Access roads shall be constructed and maintained by the CONTRACTOR to prevent adverse impacts or delays to the Work. The CONTRACTOR is responsible for maintaining the current level-of-service and condition of the on-Site access roads to prevent adverse impacts or delays to the Work.

C. On-site traffic shall be limited to the existing and proposed access roads. Damage to, or deterioration of, the Site's access roads, or any other damages to existing on-Site features caused by unauthorized deviation from these pathways, shall be restored and/or replaced to the satisfaction of the ENGINEER at the CONTRACTOR's expense to an "as-was" or "better condition."

*****END OF SECTION*****

SECTION 01562

DUST CONTROL

PART 1 - GENERAL

1.01 DESCRIPTION OF WORK

A. The CONTRACTOR shall employ methods and means that keep airborne particulates to the minimum and shall provide for the application of water or employ other appropriate preventative means or methods to maintain dust control, subject to favorable review of the ENGINEER.

1.02 HEALTH AND SAFETY

A. Site workers shall not be exposed to respirable particulates caused by the performance of the Work in excess of applicable Federal and State standards and shall be monitored in accordance with the Health and Safety Plan (see Section 01564).

PART 2 - PRODUCTS

The use of calcium chloride for dust control is not permitted on the Site.

PART 3 - EXECUTION

A. When engaging in operations that could result in the exposure to respirable particulates in excess of Standards, watering equipment shall be used to minimize airborne concentrations and shall consist of pipelines, tank trucks, or other devices acceptable to the ENGINEER, which are capable of applying a uniform spread of water over the ground surface. A suitable device for a positive shut-off and for regulating the flow rate of water shall be located so as to permit positive operator control. Potable water shall be used for dust control. For water obtained, the CONTRACTOR shall provide to the ENGINEER the name and location of the water source and evidence that it is potable.

B. Dust control shall be applied immediately when conditions warrant. A sufficient quantity of potable water shall be maintained on-Site for immediate dust control use.

*****END OF SECTION*****

SECTION 01563

CONTINGENCY PLAN FOR VOC/ODOR

PART 1 - GENERAL

1.01 DESCRIPTION OF WORK

A. The CONTRACTOR shall provide all labor, equipment, machinery, and materials to apply VOC/odor control media to exposed soils releasing odors or VOCs (volatile organic compounds) at measured levels greater than Action Levels as defined in the CONTRACTOR's Health and Safety Plan, and to contain any spills at the Site during execution of the Work.

B. Control of odors and VOC emissions is critical to Site related excavation activities. The CONTRACTOR shall be fully responsible for the proper and timely implementation of VOC and odor control measures. The CONTRACTOR shall minimize the extent and duration of excavation to minimize the potential of releasing odors. The CONTRACTOR shall monitor the limits of excavations to verify compliance with the CONTRACTOR's Health and Safety Plan.

C. Odor and VOC control shall include application and maintenance, where appropriate, of suitable soil and/or plastic cover. If necessary, The CONTRACTOR shall furnish and apply temporary foam odor control agents.

D. Spill containment shall include application and maintenance, where appropriate, of temporary berms, sumps or sorbent materials.

E. ENGINEER shall favorably review odor and VOC control and spill containment media prior to use on-site.

F. The CONTRACTOR shall maintain cover soil or plastic covers at the site for odor control and spill control media at the Site for immediate use as needed. The CONTRACTOR shall have access to odor control media through a local supplier.

G. Should the specifications herein conflict with Federal, State and local regulations, the applicable regulations shall govern.

PART 2 - PRODUCTS

2.01 VOC/ODOR CONTROL MEDIA

A. Soil cover shall be certified environmentally clean, cohensionless, and contain no particles greater than 1 inch in diameter.

B. Odor control foam shall consist of Rusmar AC-900, or a favorably-reviewed equivalent, applied in accordance with the manufacturer's recommendations for odor control.

2.02 TEMPORARY SPILL CONTAINMENT MEDIA

A. Temporary spill containment media to be immediately available for application by the CONTRACTOR shall include, but not be limited to, temporary berms or sumps, sorbent drum collars, dikes, granular material (e.g., Speedi Dry) and pre-packaged synthetic sorbents (pillows, socks and swabs). CONTRACTOR shall maintain sufficient spill containment media and equipment as required to cleanup a potential spill from hazardous materials maintained on-site by the CONTRACTOR. Sorbents shall be capable of containing both aqueous and hydrophobic (oily) spills.

PART 3 - EXECUTION

3.01 PLACEMENT OF VOC/ODOR CONTROL MEDIA

A. Soils disturbed during the course of excavation activities and found to give off odors or VOCs, in excess of the Action Levels defined in the CONTRACTOR's Health and Safety Plan for the work zone shall be covered with control measures until such time as final grading can be accomplished. The CONTRACTOR shall also implement control measures if VOCs or odors are detected outside the work zone. The CONTRACTOR shall maintain the integrity of the temporary control measures during the Work.

B. Soil or plastic cover shall be placed over disturbed areas by the CONTRACTOR immediately upon exceeding Action Levels or at the direction of the ENGINEER. If cover is not effective at controlling VOCs/odor, the CONTRACTOR shall apply VOC/odor control media.

C. Areas that have received VOC/odor control media shall not be left exposed for more than ten (10) calendar days, or any alternative period of time determined by the ENGINEER to be appropriate, without receiving a subsequent application of media until excavation in that area has been completed.

D. Following application, the CONTRACTOR shall limit traffic over the area of application to limit disruption of the control media and the subsequent potential release of VOC/odors. The CONTRACTOR shall reapply VOC/odor control media to areas that have been disturbed by excavation activities, or where the VOC/odor control media is greater than ten (10) calendar days old, at the CONTRACTOR's expense.

E. The ENGINEER shall be the final judge in determining if VOC/odor control is adequate. If the CONTRACTOR is unable to control VOCs or odors, Work may be stopped at the discretion of the ENGINEER. The CONTRACTOR will not be granted extensions of time or reimbursement for any delays so caused.

F. Used sorbents including pillows, socks and swabs shall be disposed in accordance with approved procedures.

G. The CONTRACTOR shall recover spilled solid wastes and return the solid wastes to the designated stockpile or storage areas.

3.02 EMERGENCY RESPONSE/NOTIFICATION OF RELEASES

A. In the event of any release of potentially hazardous materials, the CONTRACTOR shall immediately inform OWNER and the ENGINEER. If appropriate, OWNER or ENGINEER will contact governmental agencies. The CONTRACTOR will submit a written report to the ENGINEER within 3 days after the release. The report shall describe the events that occurred and the measures taken or to be taken to mitigate the release or threatened endangerment and to prevent the reoccurrence of such a release. For emergencies, the CONTRACTOR shall notify the appropriate contact(s) listed in Table 1 of the Health & Safety Plan in Appendix E-1 of the Design Report.

***** END OF SECTION *****

SECTION 01564

HEALTH AND SAFETY SPECIFICATIONS FOR CONSTRUCTION

PART 1 - GENERAL

1.01 PURPOSE

A. The purpose of these Health and Safety Specifications is to establish minimum health and safety requirements for the CONTRACTOR.

1.02 APPLICABILITY

A. These requirements shall be used by the CONTRACTOR's Health and Safety Officer to assist in preparation of the CONTRACTOR's Health and Safety Plan. These requirements shall not relieve CONTRACTOR from compliance with any applicable State, Federal, or other health and safety requirements and safe construction practices even if not specifically identified in these requirements. These requirements shall not relieve CONTRACTOR's complete responsibility for Site safety and security, including Health and Safety.

B. If, at any time, the OWNER or ENGINEER is apprised of a safety hazard which demands immediate attention because of its high potential for harm to public travel, persons on or about the Work, or public or private property, the OWNER or ENGINEER shall have the right to order such safeguards to be erected and such precautions to be taken as necessary and the CONTRACTOR shall comply with such orders. Furthermore, the CONTRACTOR should take appropriate measures to protect workers from oxygen-deficient or explosive atmospheres that may be present in a confined-space entry.

If, under such circumstances, the CONTRACTOR does not or cannot immediately put the work into proper and approved condition, or if the CONTRACTOR or his representative is not upon the Site so that he can be notified immediately of the insufficiency of safety precautions, then the OWNER or ENGINEER may put the Work into such a condition that it shall be, in his opinion, in all respects safe, and the CONTRACTOR shall pay all costs of such labor and materials. The fact that the OWNER or ENGINEER does not observe a safety hazard or does not order the CONTRACTOR to take remedial measures shall in no way relieve the CONTRACTOR of the entire responsibility for any costs, loss or damage by any party sustained on account of the insufficiency of the safety precautions taken by him or by the OWNER or ENGINEER acting under authority of this Section.

C. It is the responsibility of the CONTRACTOR to take appropriate safety precautions to mitigate whatever conditions of hazard may be present during the performance of the Work, whether the hazard may or may not be reasonably foreseeable. The CONTRACTOR is alerted to the fact that it shall be his responsibility to anticipate and provide such additional safety precautions, facilities, personnel, and equipment as shall be necessary to protect life and property from any conditions of hazard which are or may be present.

1.03 SITE BACKGROUND

The Site is located in East Whiteland Township, Chester County, Pennsylvania. The Site is owned and operated by Chemclene Corporation, whose current activity includes the storage, processing, sale and transportation of hydrogen peroxide at the 258 North Phoenixville Pike location. Former operations at the Site have primarily included the storage and sale of new chlorinated solvents and the distillation recycling of used chlorinated solvents for resale of the purified materials.

The Site encompasses approximately five acres along the southeast side of Bacton Hill, and consists of a Main Plant Area (MPA), located at 258 North Phoenixville Pike, and the Former Disposal Area/Mounded Area (FDA/MA) to the west. The FDA/MA are connected to the MPA by a long, narrow corridor that approximately parallels the Williams Transcontinental natural gas pipeline right-of-way.

The MPA covers an area approximately 1.25 acres. The FDA/MA is located approximately 1,900 feet west of the MPA, and consists or a partially wooded area covering approximately 2 acres surrounded by a heavily forested area. Borrow pits (approximately 15 feet in depth) were excavated in the FDA portion of the area in 1952 and over time these pits were filled by Chemclene with discarded drums, equipment, rubbish, and soil. Subsequently, Chemclene, with oversight from the Pennsylvania Department of Environmental Protection, removed approximately 300 drums and impacted soils/debris from two excavations to a depth of approximately 15 feet over several episodes from 1981 through 1984. Remnant soil piles generated from the material removal activities exist adjacent to the excavations. The FDA is currently surrounded by an 8 foot high chain-link fence.

The MA portion of the area is located immediately west of the FDA. Formerly, drums were buried in shallow excavations and/or natural depressions, and subsequently covered with soil. The drums were removed by Chemclene in the early 1990's and reportedly the soils separated and returned to the excavations, leaving the MA in its current essentially flat ground surface condition.

1.04 MINIMUM REQUIREMENTS

The CONTRACTOR shall prepare and implement a project-specific Health and Safety Plan in accordance with Section 01300. The Health and Safety Plan shall conform with applicable State and Federal requirements, including, but not limited to:

1. Safety and Health Regulations Promulgated by the U.S. Department of Labor OSHA, 29 CFR 1910 and 1926 - Occupational Safety and Health Standards, and 29 CFR 1920 - Safety and Health Regulations for Construction.
2. U.S. Environmental Protection Agency Interim Standard Operating Safety Guides - Office of Emergency and Remedial Response - Hazardous Response Support Division, Rev. September 1982.
3. U.S. Environmental Protection Agency Medical Monitoring Program Guidelines.

The Health and Safety Plan shall be prepared by the CONTRACTOR's Health and Safety Officer. The CONTRACTOR's Health and Safety Officer shall have experience with establishing and implementing health and safety plans for hazardous waste site

remediation projects and be a Certified Industrial Hygienist. The resume of the CONTRACTOR's Health and Safety Officer shall be included in the Health and Safety Plan. The Health and Safety Officer shall be responsible for:

- Implementing the Health and Safety Plan;
- Updating the Health and Safety Plan as needed based on site conditions;
- Overall health and safety of the CONTRACTOR's and SUBCONTRACTOR's personnel;
- Monitoring site health and safety conditions; and
- Maintaining health and safety records.

The CONTRACTOR's Health and Safety Plan shall incorporate the requirements contained herein and shall describe all actions to be taken to protect the health and safety of workers and the surrounding community. The Health and Safety Plan shall identify all tasks to be undertaken by the CONTRACTOR and shall establish Health and Safety procedures for each task. The CONTRACTOR's Health and Safety Plan shall be approved in writing by the CONTRACTOR's Health and Safety Officer, and shall be submitted to the ENGINEER for submission to PADEP and USEPA Region III prior to the initiation of any fieldwork. Any modifications to the Health and Safety Plan shall be submitted to the ENGINEER prior to construction. The ENGINEER, PADEP, and USEPA may comment on the CONTRACTOR's Health and Safety Plan and any modifications thereto, but will not provide approval of the Health and Safety Plan.

Training requirements of all field personnel shall be specified in the Health and Safety Plan. As a minimum, training in accordance with 29 CFR 1910.120 should be required for all personnel involved in intrusive activities (i.e., all below grade work and all grading and handling of soil or waste materials). Such training should also be required, at a minimum, for all crews who could be exposed to potentially hazardous materials during tie-ins, connections, and testing.

To assist in preparation of the Health and Safety Plan, the CONTRACTOR is encouraged to review existing Site documents including, but not limited to:

1. Record of Decision, USEPA, November 1997.
2. Pre-Final Design Report, Golder Associates Inc., December 2003.
3. Pre-Design Investigation Report, Golder Associates Inc., May 2002.
4. Consent Decree, USEPA, December 1999.
5. Focused Feasibility Study Report, Golder Associates Inc., May 2002.
6. SVE Pilot Study Report, Golder Associates, May 2002.

All of these documents are available at the offices of the ENGINEER or Public Repositories, for CONTRACTOR's inspection. CONTRACTOR shall review the Record of Decision Amendment No. 1, (USEPA, if available), the Record of Decision (USEPA, 1997), and the Consent Decree (USEPA, 1999) furnished to the CONTRACTOR. A copy of a site specific Health and Safety Plan prepared by Golder Associates for Field Investigation Activities is included in the Supplemental Documents. The CONTRACTOR's Health and Safety Plan shall include the minimum requirements established in this plan and be project specific to the implementation of the Work. The CONTRACTOR may be provided, on request, with an electronic copy of the Design Health and Safety Plan.

The Health and Safety Plan shall, at a minimum, include the following:

A. Monitoring of the worker breathing zone and upwind and downwind of the work area for organic vapors and respirable dust. The CONTRACTOR shall immediately notify the OWNER if monitoring activities indicate a potential exposure to plant workers or off-site receptors.

B. Action levels for upgrading personal protective equipment (PPE) or implementing engineering controls shall be determined by the CONTRACTOR and set in the Health and Safety Plan consistent with assuring health and safety of construction workers and potential on-Site and off-Site receptors.

C. The Work to be performed at the Site may, on occasion, need to be conducted in Level C or B personal protective equipment (PPE). The CONTRACTOR shall determine the appropriate PPE for each activity. The CONTRACTOR shall provide PPE for the ENGINEER who demonstrate they have the proper updated training for use of such equipment. The CONTRACTOR shall provide decontamination stations and shall maintain the stations daily during the contract period. The CONTRACTOR shall provide receptacles for and disposal of all PPE used on-site. PPE may be disposed in accordance with the requirements for debris and waste soil disposal described in the Contract Documents.

D. Emergency phone numbers for the local hospital, ambulance service, and police. The list of emergency phone numbers shall be posted in conspicuous locations on-site. A map showing the location of the nearest hospital and the most direct route to the hospital shall be included in the Health and Safety Plan. The map shall be posted in a conspicuous location on-Site.

E. Contingency Plan describing medical emergency response, fire and explosion response, chemical exposure first aid, unforeseen circumstances, accident and incident reporting, and emergency contacts.

F. An evaluation of potential site hazards.

G. Applicable material safety data sheets.

H. Contingency Plan describing procedures to be used in the event that drums or buried containers are uncovered during the implementation of the Work.

I. Incorporation of the Design Health and Safety Plan (HASP) found in Appendix E-1 of the Design Report. CONTRACTOR shall comply with the no smoking policy. The CONTRACTOR shall notify the OWNER in writing of any conflict between the Design HASP and the Contract Documents and the CONTRACTOR's Health and Safety Plan.

J. A Decontamination Plan, developed in conjunction with the Health and Safety Plan and submitted as part of the Contractor Site Management Plan in accordance with Section 01300. The Decontamination Plan shall include:

1. Description of the procedures and materials used for the decontamination of all equipment that will be in contact with hazardous materials or media containing hazardous materials (i.e., soil, groundwater). Equipment would include such items as drill rigs, trucks, sampling equipment, field instruments, and hand-tools;
2. No decontamination pad is available on-Site. A decontamination pad shall be constructed by the CONTRACTOR. The Plan shall include a description and Site map showing the location of the decontamination pad. The decontamination pad shall be routinely inspected and/or repaired to ensure collection of all decontamination water for subsequent disposal and be maintained throughout the construction period.
3. Description of the procedures used to characterize, contain, store, and dispose of washwater and personal protective equipment used during decontamination procedures. Water is not available on-Site and shall be the responsibility of the CONTRACTOR.

J. Listing of local, state, and federal agencies that will be contacted in the event an accident occurs that could potentially harm or threaten the health and safety of the CONTRACTOR's personnel, the general public, or the environment.

1.03 SUBMITTALS

A. The CONTRACTOR shall submit a Health and Safety Plan to the ENGINEER for approval within ten (10) days after the Notice to Proceed and prior to mobilization onto the Site.

PART 2 - PRODUCTS

Not Used.

PART 3 - EXECUTION

3.01 RECORDKEEPING

A. All parties engaged in on-Site activities shall read and sign the CONTRACTOR's Health and Safety Plan for the relevant tasks. Documentation demonstrating compliance with this requirement shall be maintained on-site by the CONTRACTOR. Written evidence of compliance with 29 CFR 1910.120 and applicable State requirements shall be maintained on-site in the CONTRACTOR's files. Copies of such documentation shall be provided to the ENGINEER.

**** END OF SECTION ****

SECTION 01580

WARNING SIGNS

PART 1 - GENERAL

1.01 DESCRIPTION OF WORK

A. CONTRACTOR shall furnish all labor, materials, equipment, tools, and appurtenances required to complete the work of furnishing and installing the warning signs at the locations as shown on the Drawings or directed in the field by the ENGINEER. CONTRACTOR shall provide a "Competent Person" to implement, supervise, and inspect all work.

B. Comply with applicable codes, ordinances, rules, regulations and laws of local, municipal, state or federal authorities having jurisdiction.

PART 2 - PRODUCTS

2.01 MATERIAL

A. Each sign shall be non-reflective minimum 18-gauge steel or 0.080-inch thick aluminum and shall have a white background with black lettering and borders.

B. Each post shall be galvanized U-channel type construction, a minimum of 10 feet in length, and a minimum of 3 inches in width with pre-punched 7/16 inch holes suitable for sign mounting. The base of each post shall be provided with cleats to ensure their stable installation.

PART 3 - EXECUTION

3.01 INSTALLATION

A. Each U-channel post shall be driven into the ground a minimum of 3 feet at the locations as shown on the Contract Drawings or as directed in the field by the ENGINEER.

B. Each sign shall be centered and mounted on the post such that the base of the sign is 5 to 6 feet above ground surface. Each sign shall be fastened to the post using a minimum of two 2-inch x 5/16-inch galvanized or stainless steel bolts and nuts. Peen or score ends of bolts following installation to prevent removal of nuts.

END OF SECTION

SECTION 01590

FIELD OFFICES AND STORAGE SPACE

PART 1 - GENERAL

1.01 DESCRIPTION OF WORK

A. The CONTRACTOR shall provide a trailer with a field office for the CONTRACTOR's own needs, and one separate trailer for the OWNER, USEPA representatives, OWNER's REPRESENTATIVE, and the ENGINEER. The CONTRACTOR shall also provide secured storage space for the CONTRACTOR's needs. Alternatively, the CONTRACTOR may provide field offices in one or more large portable structures subject to the approval of the ENGINEER.

B. The size of the CONTRACTOR's field offices and capacity of the storage areas shall be the responsibility of the CONTRACTOR and shall be such that daily operations can be conducted without restrictions. Office space shall provide adequate space for Project Meetings. Storage areas shall allow for access and orderly provision for maintenance and for inspection of products. The CONTRACTOR administrative, staging, and laydown areas shall be coordinated in the field by the ENGINEER.

C. All field offices shall be kept clean and maintained weekly by the CONTRACTOR. The office space shall be kept free from obstructions. The CONTRACTOR shall maintain the area immediately around field offices to provide safe approach, entry, and exit. Stockpiles, debris, and equipment shall be located away from the field office.

D. The CONTRACTOR shall be responsible for all costs to permit, install and maintain, and remove the field office trailers and all temporary utilities for the duration of the Work. The CONTRACTOR shall pay for the electricity, telephone, bottled water, cleaning, and trash removal bills. Office furnishings, equipment (i.e., copiers, facsimile machines, cordless telephones including at least one phone equipped with a speaker phone, answering machines, and computers) and appliances (i.e., microwave ovens, bottled water dispensers, and refrigerators).

E. Within 10 working days after receipt by CONTRACTOR of written Notice to Proceed, CONTRACTOR shall install the field office provided for the use of the CSDG employees and the ENGINEER in connection with performance of the Work.

PART 2 - PRODUCTS

2.01 GENERAL

A. All equipment, building materials, furnishings, and fixtures must be adequate for the required purposes.

B. The ENGINEER's Office shall have a locking entrance door with a new lock and four (4) keys, and will include one office and a meeting room.

C. ENGINEER's Office Furnishings/Equipment shall include:

1. Two (2) standard size desks, 3 feet x 5 feet with drawers with locks and keys.
2. One (1) 30-inch by 72-inch drafting table.
3. One (1) standard conference table with eight (8) chairs.
4. Dry type copy machine capable of making 8-1/2 x 11-inch copies. Provide all supplies, expendables, and maintenance for period field office is required.
5. Dry type plain paper fax machine, to include all supplies, expendables, and maintenance for period field office is required.
6. Package new basic first aid kit.
7. Two (2), 5-lb. Nominal capacity, wall mounted fire extinguishers, including one UL-rated for use on electronic equipment.
8. Minimum four (4) 110-volt duplex convenience outlets, at least one (1) on each wall and one (1) in each office.
9. Two (2) cordless telephones capable of recording messages.
10. One microwave and a small refrigerator.

PART 3 - EXECUTION

3.01 PREPARATION

A. Field offices shall be placed at locations approved by the ENGINEER.

B. Prior to the placement or construction of the field offices, the areas shall be graded to promote positive drainage away from the area and in a manner favorably reviewed by the ENGINEER.

3.02 INSTALLATION

A. Field offices shall be installed on adequate foundations and shall be level. Portable trailers shall be adequately anchored to prevent uplift.

B. Office space shall be ready for occupancy no later than 10 days after the Notice to Proceed is given.

C. A parking area shall be located adjacent to the field office with adequate parking space for at least five (5) vehicles.

3.03 REQUIREMENTS

A. Portable or mobile buildings with raised floors shall be equipped with steps and landings at entrance doors including steps and handrails constructed in accordance with applicable Federal, State and local regulations.

B. Each office shall contain a minimum of two rooms (offices) and shall be minimum of 300 square feet. Heating, air conditioning, and operable windows with expanded metal protection shall be provided for each trailer.

C. Each office trailer shall be supplied with a bottled water dispenser (hot and cold) and regularly supplied with bottled potable drinking water.

D. A minimum of three (3) portable restrooms, one shall be designated for use by women only (with lock). Portable restrooms shall be supplied and maintained on at least a weekly basis.

E. Provide four (4) separate telephone lines to each office trailer, two (2) voice lines and two (2) data lines (facsimile and computer modem). The CONTRACTOR shall likewise provide for two (2) telephones with individual answering machines and one (1) facsimile machine. Provide each office trailer with one (1) copier.

F. Provide one or more dumpsters for trash and arrange for emptying/hauling and off-Site disposal of trash on at least a weekly basis. The CONTRACTOR shall pick-up accumulated trash and debris daily and deposit them into a dumpster.

3.04 REMOVAL

A. At the completion of the Work, remove all buildings, utility services, trailers, and debris and restore areas to their original condition. Apply vegetative layer and seeding as required by the Contract Documents.

*****END OF SECTION*****

SECTION 01600

MATERIAL AND EQUIPMENT

PART 1 - GENERAL

1.01 DESCRIPTION OF WORK

A. The word, "Products," as used herein, is defined to include purchased items for incorporation into the Work, regardless of whether specifically purchased for project or taken from CONTRACTOR's stock of previously purchased products.

B. The word, "Materials," is defined as products which must be substantially cut, shaped, worked, mixed, finished, refined, or otherwise fabricated, processed, installed, or applied to form units of Work.

C. The word, "Equipment," is defined as products with operational parts, regardless of whether motorized or manually operated, and particularly including products with service connections (wiring, piping, etc.).

D. Definitions in this paragraph are not intended to negate the meaning of other terms used in the Contract Documents, including "specialties," "systems," "structure," "finishes," "accessories," "furnishings," special construction," and similar terms which are self-explanatory and have recognized meanings in the construction industry.

1.02 QUALITY ASSURANCE

A. Source Limitations. To the greatest extent possible for each unit of Work, the CONTRACTOR shall provide products, materials, or equipment of a singular generic kind from a single source.

B. Compatibility of Options. Where more than one choice is available as options for CONTRACTOR's selection of a product or material, the CONTRACTOR shall select an option, which is compatible with other products and materials already selected (which may have been from among options for those other products and materials). Total compatibility among options is not assured by limitations within the Contract Documents, but must be provided by the CONTRACTOR. Compatibility is a basic general requirement of product/material selection.

1.03 PRODUCTS

A. Products include material, equipment, and systems. Products may also include existing materials or components required for reuse.

B. Do not use materials and equipment removed from existing structure of system, except as specifically required, or allowed by Contract Documents.

C. Comply with Specifications and referenced standards as minimum requirements.

D. Provide components of the same manufacturer, for interchangeable components.

1.04 PRODUCT OPTIONS

A. Products Specified by Reference Standards or by Description only: Any product meeting those standards may by used.

B. Products Specified by naming one or more Manufacturers with a provision for substitutions: Submit a request for substitution for any manufacturer not specifically named.

C. Products Specified by Naming Several Manufacturers: Products of named manufacturers meeting specifications: No options, no substitutions allowed.

D. Products Specified by Naming Only One Manufacturer: No options, no substitutions allowed.

E. Where product options are available, selected products shall be compatible with other proposed materials and products.

F. Selected products shall be provided by single source throughout the duration of the Work unless otherwise approved by ENGINEER.

1.05 SUBSTITUTIONS

A. Document each request with complete data substantiating compliance of proposed substitution with Contract Documents. It is the CONTRACTOR's responsibility to provide sufficient evidence by tests or other means to support any request for approval of substitutions. Each written request for a substitution shall be accompanied by a summary of the cost differential between the specified product and the substituted product, and include a description of the proposed substitutions effects on construction schedule and other changes required in the Work to implement proposed change. The burden of proof that a proposed substitution is equivalent to a specified item shall be on the CONTRACTOR, who shall support his request with complete data substantiating compliance of proposed substitution with the Contract Documents to permit a fair and equitable decision on the merits of the proposal.

B. Request constitutes a representation that CONTRACTOR:

1. Has investigated proposed product and has determined that it meets or exceeds, in all respects, specified product.
2. Will provide the same warranty for substitution as for the specified product.
3. Will coordinate installation and make other changes, which may be required for Work to be complete in all respects.
4. Waives claims for additional costs, which may subsequently become apparent.

C. Substitutions will not be considered when they are indicated or implied on shop drawing or product data submittals without separate written request, or when acceptance will require substantial revision of Contract Documents.

D. ENGINEER will determine acceptability of proposed substitution, and will notify CONTRACTOR of acceptance or rejection in writing within a reasonable time.

PART 2 - PRODUCTS

Not Used

PART 3 - EXECUTION

Not Used

*****END OF SECTION*****

SECTION 01610

TRANSPORTATION AND HANDLING

PART 1 - GENERAL

1.01 TRANSPORTATION AND HANDLING

A. Transport products by methods with prevent product damage; deliver in undamaged, dry condition in manufacturer's unopened containers or packing.

B. Provide equipment and personnel to handle and store products by methods, which prevent soiling or damage.

C. Promptly inspect shipments to ensure that products comply with requirements, quantities are correct, and products are undamaged. Promptly remove damaged products from the site and replace with products meeting the specified requirements.

D. The ENGINEER may reject as non-complying such products that do not bear identification satisfactory with the ENGINEER as to manufacturer, grade, quality, or other pertinent information.

1.02 DISPOSAL

A. Submit to ENGINEER the disposal site location for excess materials, which may not be disposed on-site before beginning Work.

B. Dispose of excess materials off-site in an appropriate manner.

PART 2 - PRODUCTS

Not Used

PART 3 - EXECUTION

Not Used

END OF SECTION

Marshall, Tasha

From: Marshall, Tasha
Sent: Tuesday, June 15, 2004 3:23 PM
To: 'Galanti, Robin'
Subject: RE: Transportation Ad

Robin, go ahead and run with the same ad from 2002

M. Tasha Marshall
marshall@golder.com

From: Galanti, Robin [mailto:Robin_Galanti@mcgraw-hill.com]
Sent: Tuesday, June 15, 2004 11:23 AM
To: Marshall, Tasha
Subject: Transportation Ad

Hi Tasha,

I got your message. We run Transportation as a topic every August each year. The last Transportation ad that we ran for you was in 2002 and was not run in 2003. The ad I faxed you was the most recent Transportation ad that we have for Golder Associates.

Please let me know if you have any other questions.

Have a great day!!!

Regards,

Robin

SECTION 01611

STORAGE AND PROTECTION

PART 1 - GENERAL

1.01 STORAGE AND PROTECTION

A. Store products in accordance with manufacturer's instructions, with seals and labels intact and legible. Store sensitive products in weather-tight enclosures; maintain within temperature and humidity ranges required by manufacturer's instructions.

B. For exterior storage of fabricated products, place on sloped supports above ground. Cover products subject to deterioration with impervious sheet covering; provide ventilation to prevent condensation.

C. Store loose granular materials on solid surfaces in a well-drained area; prevent mixing with foreign matter.

D. Arrange storage to provide access for inspection. Periodically inspect to ensure products are undamaged and are maintained under required conditions.

PART 2 - PRODUCTS

Not Used

PART 3 - EXECUTION

Not Used

*****END OF SECTION*****

SECTION 01655

MECHANICAL CHECKOUT / TRAINING / START UP

PART 1 - GENERAL

1.01 DESCRIPTION OF WORK

A. The work to be performed under this Section includes, but is not limited to, the provision of all labor, materials, and testing required to perform start-up of all equipment including electrical controls and mechanical systems provided under this Contract. Start-up of equipment shall be coordinated with the ENGINEER and Equipment Vendors. The CONTRACTOR shall pay for all services provided by the Equipment Vendors. Starting of systems and OWNER and OPERATOR training shall be conducted in accordance with this Section and as specified in individual Sections. CONTRACTOR shall provide a "Competent Person" to implement, supervise, and inspect all work.

1.02 MECHANICAL CHECKOUT

A. CONTRACTOR shall prepare a system checkout plan, including pre-start mechanical and electrical inspections, clean air operation of valves, level switches and alarms. Include all checks incorporated within the followings Sections. CONTRACTOR shall submit this system checkout workplan a minimum of 21 days prior to the anticipated start up date.

B. After installation of the equipment, the CONTRACTOR shall test and check all electrical systems for completeness, continuity, and proper ground. After satisfactory testing and correcting of Work, the CONTRACTOR shall notify the ENGINEER when the equipment will be inspected and tested by the Equipment Vendor. The CONTRACTOR shall provide the ENGINEER five working days notice prior to the inspection and testing of equipment by the Equipment Vendor. The CONTRACTOR shall provide equipment vendor's services for mechanical checkout of the following:

1. Package Blower System
2. Heat Exchanger
3. Vapor Treatment System
4. Total Hydrocarbon Analyzer
5. Control System

C. The Equipment Vendor shall perform a functional test on each piece of equipment provided by the Equipment Vendor. CONTRACTOR, OWNER, and ENGINEER shall be present during initial checkout and start up of the system. The CONTRACTOR is responsible for making any adjustments or corrections to his work, as determined by the Equipment Vendor or ENGINEER. Additionally, the CONTRACTOR shall make necessary corrections to the Equipment Vendor's work. The functional test shall consist of operation of the equipment on a normal duty cycle for a sufficient period of time to determine satisfactory operation. To the maximum extent practical, exercise the full capabilities of all

equipment including remote monitoring, instrumented control schemes, alternate modes of operation and emergency operation. All tests shall be performed in the presence of the ENGINEER. The Equipment Vendor shall instruct the ENGINEER, OWNER, and OPERATOR on the operation, preventative maintenance, and repair of the equipment.

D. The CONTRACTOR, SVE VENDOR, and his SYSTEM INTEGRATOR, if utilized for control systems, shall test all controls and control systems in the presence of the ENGINEER. The CONTRACTOR shall test all circuits, control systems, and devices. The CONTRACTOR shall make such changes in wiring or connections and such adjustments, repairs or replacements as are necessary to make the circuits, device or control system function as specified and otherwise comply with the specifications or data or the Contract Documents. The CONTRACTOR shall instruct the ENGINEER, OPERATOR, and OWNER on the operation and preventative maintenance of controls and control systems.

E. Test Certification

Following completion of the pre-checkout inspections and functional tests by the manufacturer's representative, the CONTRACTOR shall demonstrate operation of the complete system including off-gas treatment at the vapor phase granular activated carbon vapor treatment system.. A clean test will be performed for the SVE blowers on air and air/water separator and condensate pump on potable water in the presence of the OWNER and ENGINEER prior to start up of the system. Prior to the air and hydraulic tests, the CONTRACTOR shall obtain copies of all manufacturer's certifications, signed checkout and test reports and performance guarantees. Copies of this information shall be submitted to the ENGINEER for favorable review.

The CONTRACTOR shall demonstrate proper operation of the control system as follows:

1. Proper operation and readout of field measurement devices including transmitters. For transmitters demonstrate proper operation and agreement of the local and Programmable Logic Controller (PLC) interface displays. Demonstrate proper operation of the PLC data management system including the trending and reporting of variables. Demonstrate the accuracy of PLC calculated pressures. Provide training on remote monitoring of the system by personal computer.
2. At this time the CONTRACTOR shall demonstrate proper operation and readout of field measurement device including pressure gauges and flow meters. For the vacuum transmitters, the CONTRACTOR shall demonstrate proper operation of the local and PLC interface display, proper operation of the PLC data management system including the trending and reporting of blower vacuum.. For the temperature transmitters, the CONTRACTOR shall demonstrate proper operation of the local and PLC interface display, proper operation of the PLC data management system including the trending and reporting of heat exchanger discharge temperature. The CONTRACTOR shall demonstrate proper operation of level switches in the air/water separator.

The CONTRACTOR shall demonstrate operation of each alarm, shutdown and interlock function and activation of all local and remote alarm lights, PLC interface displays, alarm horns, dialer communications and equipment shutdowns. The CONTRACTOR shall demonstrate the proper operation of all operator adjustable PLC alarms and shutdowns by demonstrating operation at a minimum of two setpoints.

3. Simulate each alarm, shutdown and interlock function and demonstrate activation of all local and remote alarm lights, PLC interface displays, alarm horns, dialer communications and equipment shutdown sequence. Demonstrate the proper operation of all operator adjustable PLC alarms and shutdowns by demonstrating operation at a minimum of two setpoints.
4. Proper operation of the SVE system in conjunction with the heat exchanger, total hydrocarbon analyzer, and vapor treatment system including a demonstration of each interlock and monitoring loop.

Following demonstration of the control system and acceptance by the OWNER and ENGINEER, the CONTRACTOR shall demonstrate continuous uninterrupted operation of the system on air for a period of 24 hours. The CONTRACTOR shall record all system operating parameters, including local pressure and temperature gauges, a minimum of once each hour. The CONTRACTOR shall provide PLC trending reports for the process variable vacuum for the duration of the 24-hour test.

Following completion of the system test the ENGINEER shall submit to the CONTRACTOR a summary of deficiencies that must be completed prior to the start up of the system. The CONTRACTOR will correct each deficiency and demonstrate proper repair to the ENGINEER.

The CONTRACTOR shall maintain a log of all tests performed during the system test with relevant information including: date, test method, acceptance criteria, result of test (i.e. "acceptable" or "not acceptable") and other comments. Within 60 days following completion of the system test, the CONTRACTOR shall submit a report to the ENGINEER documenting the results of the system test. The report shall include the following:

1. Certification that the system performs in accordance with the design specifications;
2. Certification that each individual piece of equipment operates in accordance with the manufacturer's written instructions;
3. Copies of all readings, logs, and trending printouts; and,
4. A summary of all deficiencies observed during system checkout and changes made to correct them.

1.03 SYSTEM START-UP

Following completion of the system test and satisfactory review of the system by the OWNER and ENGINEER the system will be ready for start-up and operation. The purpose of start-up is to test all system components and verify system operability at varying flow rates and influent concentrations. To this extent each SVE well or groups

of SVE wells will be brought on-line in a phased approach. As each well is brought on-line, sufficient time must be provided to allow contaminants to circulate throughout the treatment system. This will allow time to assess the performance of the system before bringing the next well(s) on-line.

The CONTRACTOR will be responsible for operating and maintaining the system throughout the start-up period or, after 14-days of continuous uninterrupted operation, it has been demonstrated satisfactorily to the ENGINEER that the CONTRACTOR's work is free of defect. The ENGINEER will review system performance and callout system operating deficiencies to the CONTRACTOR. The ENGINEER will be responsible for determining when and which wells will be brought on-line.

The ENGINEER will be responsible for collecting system operating data including influent and effluent samples for analyze. Laboratory results will be reported within 7 days of sample collection. Samples will be analyzed by the OWNER's LABORATORY at the OWNER's expense.

After System Start-up is complete, CONTRACTOR shall certify to the ENGINEER, in writing, that all equipment provided by the CONTRACTOR is fully operational and capable of meeting full-time operating requirements.

PART 2 - PRODUCTS

Not Used.

PART 3 - EXECUTION

Not Used.

***** END OF SECTION *****

SECTION 01666

CLEANING AND TESTING OF PIPING

PART 1 - GENERAL

1.01 DESCRIPTION OF WORK

A. Furnish all labor, materials, tools, equipment and related items required for cleaning and testing of piping installed by CONTRACTOR as specified herein and in all other applicable codes.

1.02 REFERENCES

A. American Water Works Association Standard C600-77

1.03 SUBMITTALS

A. Submit shop drawings and product data in accordance with Section 01300.

B. Submittals shall include proposed testing procedures, including test medium and pressure, line segments and equipment included in the test, pressure monitoring techniques, and the certification form to be submitted to the ENGINEER.

PART 2 - PRODUCTS

2.01 GENERAL

A. Detergents, solvents, and other cleaning or testing materials shall be compatible with the materials of fabrication of the systems in which they are used. They shall not adversely affect the materials or mechanisms in the systems, and they shall be acceptable to equipment manufacturers. Detergents, solvents, and other cleaning agents shall also be non-flammable and compatible with the process streams to be handled by the systems in which they are used.

B. Materials in blinds, gaskets, bolts, etc., used in isolating segments of systems shall be compatible with the systems being cleaned and/or tested.

2.02 TEST MEDIA

A. CONTRACTOR shall furnish all equipment, necessary piping, required labor and expenses to test piping systems. Test medium shall be water or air. Test media shall be compatible with the piping material of construction and usage.

2.03 TEST EQUIPMENT

A. CONTRACTOR shall furnish all labor and equipment, including required pumps, vacuum pumps and compressors with regulated bypass meters and gauges, for conducting of the piping tests. Gauges shall be calibrated to an NBS traced standard. Gauges shall have divisions not exceeding 2% of the test pressure.

PART 3 - EXECUTION

3.01 CLEANING

A. General

1. CONTRACTOR shall provide and install temporary connections, strainers, and other equipment to thoroughly clean the piping systems before start-up. CONTRACTOR shall dispose of cleaning agents and remove temporary connections and strainers after cleaning is complete.
2. Piping shall be cleaned just prior to installation and/or start-up whenever possible. Cleaned piping material shall be protected against contamination by sealing open ends.

3.02 TESTING

A. General

1. The entire length of all vacuum, pressurized piping and gravity lines shall be tested for tightness by a test as described hereinafter.
2. The timing and sequence of testing shall be scheduled by CONTRACTOR, subject to the approval of ENGINEER. CONTRACTOR shall provide ENGINEER 48 hours notice prior to all testing.

B. Testing

1. CONTRACTOR shall provide a supply of test medium, including water, for making these tests.
2. Each section of pipe to be tested shall be slowly filled with the test medium and the specified test pressure, based on the elevation of the lowest point of the line or section under test and corrected to be elevation of the test gauge, shall be applied by means of a pump connected to the pipe in a manner satisfactory to ENGINEER.
3. CONTRACTOR shall furnish the vacuum pumps, pump, connections, gauges and all other equipment required for proper execution of the pressure test. The gauges shall be subject to testing by, and approval of, the ENGINEER.

C. All tests shall be made after piping is placed in its final location and elevation and prior to backfill and compaction. All tests shall be made before piping is covered or otherwise concealed. CONTRACTOR shall be responsible for uncovering and retesting any piping not satisfactorily tested in the presence of the ENGINEER. Pipe shall be retested after placement of backfill and compaction of trench

D. The testing requirements for the respective systems shall include all those of applicable governing codes, Laws and Regulations, such as Commonwealth, local and those specified herein. All code-required inspection certificates shall be furnished to OWNER.

E. Where the piping system is connected to equipment or components designed for operating pressures less than the test pressure, such equipment or components shall be isolated from the piping system by disconnecting them and capping the outlets.

3.03 PIPE TEST SCHEDULE

A. Upon completion of each piping system or sub-system, clean and test lines. Test in accordance with the following requirements:

	Test Medium	Test Pressure[4]	Minimum Duration[1]	Pass/Fail
Soil Vapor Extraction System[2]	Air	Full Vacuum/ 15 psig	1 hour	visible or audible leak, measurable pressure drop or rise

[1] Test duration shall not be less than 1/2-hour for each 500 cubic feet of pipe volume.

[2] Soil vapor extraction system, which includes piping between the well heads and the blowers, shall be tested at full vacuum. Soil vapor extraction system, which includes piping between the blowers and tie-ins to the vapor phase granular activated carbon vapor treatment system, shall be tested at 15 psig.

B. Repair and retest any piping system found to be leaking until results are satisfactory to ENGINEER.

C. Test pressure to be used shall be no less than 1-1/2 times the proposed maximum working pressure or vacuum (i.e., pump or blower deadhead rating) but not less than 80 psig with the exception of SVE vapor piping shall be tested to 15 psig and 15 psig of vacuum, irrespective of design.

3.04 REPAIRS

A. CONTRACTOR shall repair any leaks discovered during the initial portion of the testing sequence. All known and visible leaks shall be repaired, whether or not the leakage rate is within allowable limits. ENGINEER shall witness all repairs.

B. If the leakage exceeds the specified allowable limits, the point or points of leakage shall be sought out and remedied by CONTRACTOR at no additional cost to OWNER. ENGINEER must approve repair methods.

3.05 FINAL ACCEPTANCE

A. No pipeline installation shall be accepted until all known and visible leaks have been repaired, whether or not the leakage is within the maximum allowable limits.

B. The CONTRACTOR shall provide ENGINEER with written certification of equipment/system cleaning and testing in accordance with this Section. All test data and documentation shall be provided to the ENGINEER as part of the written certification.

****END OF SECTION****

Marshall, Tasha

From: Galanti, Robin [Robin_Galanti@mcgraw-hill.com]
Sent: Tuesday, June 15, 2004 3:42 PM
To: Marshall, Tasha
Subject: RE: Transportation Ad

No problem. It will be a pick up from page 66 of that issue.

-----Original Message-----
From: Marshall, Tasha [mailto:tasha_marshall@golder.com]
Sent: Tuesday, June 15, 2004 3:23 PM
To: Galanti, Robin
Subject: RE: Transportation Ad

Robin, go ahead and run with the same ad from 2002

M. Tasha Marshall
marshall@golder.com

From: Galanti, Robin [mailto:Robin_Galanti@mcgraw-hill.com]
Sent: Tuesday, June 15, 2004 11:23 AM
To: Marshall, Tasha
Subject: Transportation Ad

Hi Tasha,

I got your message. We run Transportation as a topic every August each year. The last Transportation ad that we ran for you was in 2002 and was not run in 2003. The ad I faxed you was the most recent Transportation ad that we have for Golder Associates.

Please let me know if you have any other questions.

Have a great day!!!

Regards,

Robin

SECTION 01700

CONTRACT CLOSEOUT

PART 1 - GENERAL

1.01 DESCRIPTION OF WORK

A. The work under this section includes, but is not limited to the maintenance, recording and submittal of appropriate project documents for project closeout.

1.02 RELATED SECTIONS

A. Project Coordination - Section 01041

B. Submittals - Section 01300

C. Project Record Documents - Section 01720

D. Warranties – Section 01740

1.03 SUBSTANTIAL COMPLETION

A. The CONTRACTOR shall submit written notice to OWNER that project, or designated portion of project, is substantially complete.

B. The CONTRACTOR shall submit list of major items to be completed or corrected.

C. ENGINEER and OWNER's REPRESENTATIVE will review the project after receipt of notice, together with CONTRACTOR.

D. Should the ENGINEER and OWNER's REPRESENTATIVE consider that work is tentatively substantially complete:

1. CONTRACTOR shall prepare and submit to ENGINEER and OWNER's REPRESENTATIVE, a list of items to be completed or corrected, as determined by the review.
2. CONTRACTOR shall complete work listed for completion or correction, within designated time.

E. Should ENGINEER and OWNER's REPRESENTATIVE consider that work is not substantially complete:

1. He shall immediately notify CONTRACTOR, in writing, stating reasons.
2. CONTRACTOR shall complete work, and send second written notice to ENGINEER and OWNER's REPRESENTATIVE, certifying that project, or designated portion of project, is substantially complete.
3. ENGINEER and OWNER's REPRESENTATIVE will again review the work.

1.04 FINAL CLEANING

A. Execute final cleaning prior to final inspection.

B. Clean debris from drainage system and cover area.

C. Clean remainder of the Site of any deleterious material as directed by OWNER.

D. Remove waste and surplus materials, rubbish, and construction facilities from the Site.

1.05 FINAL REVIEW

A. CONTRACTOR shall submit written certification that

1. Work has been completed in accordance with Contract Documents.
2. Equipment and systems have been tested in presence of OWNER and are operational.
3. All inspections by local or regional agencies have been satisfactorily completed.
4. Project is completed and ready for final review.
5. The project record documents have been maintained in accordance with Section 01720 and accurately describe the complete work.

B. Should ENGINEER and OWNER's REPRESENTATIVE consider that work is not finally complete:

1. He will notify CONTRACTOR, in writing, stating reasons.
2. CONTRACTOR shall take immediate steps to remedy the stated deficiencies and send second written notice to OWNER certifying that work is complete.
3. ENGINEER and OWNER's REPRESENTATIVE will again review the work.

1.06 CLOSEOUT SUBMITTALS

A. Project Record Documents: In accordance with requirements of Section 01720.

B. Deliver evidence of compliance with requirements of governing authorities:

1. Certificates of Acceptance, if required.
2. Certificate of Occupancy, if required.

C. Deliver Certificate of Insurance for Products and Completed Operations.

D. Applicable requirements of federal, state, and local agencies having jurisdiction.

1.07 EVIDENCE OF PAYMENTS, AND RELEASE OF LIENS

A. CONTRACTOR's Affidavit of Payment of Debts and Claims.

B. CONTRACTOR's Affidavit of Release of Liens; with:

1. Consent of Surety to Final Payment.
2. CONTRACTOR's release or waiver of liens. (To be reviewed by ENGINEER and OWNER's REPRESENTATIVE prior to final Payment Certification.)
3. Separate releases or waivers of liens for subcontractors, suppliers, and others with lien rights against property of OWNER, together with list of those parties.

C. All submittals shall be duly executed before delivery to OWNER.

1.08 FINAL ADJUSTMENT OF ACCOUNTS

A. Submit final Application for Payment to OWNER:

B. Application for Payment shall reflect all adjustments, including:

1. Original Contract Amount.
2. Additions and deductions resulting from

   a. Previous Change Orders.
   b. Unit Prices.
   c. Other Adjustments.
   d. Deductions for uncorrected work.
   e. Deductions to Re-review/Re-inspection Payments.

3. Total Contract price, as adjusted.
4. Previous payments.
5. Amount remaining due.

1.09 POST-CONSTRUCTION REVIEW

A. Prior to expiration of one year from Date of Substantial Completion, ENGINEER and OWNER's REPRESENTATIVE will make visual review of Project in company with CONTRACTOR to determine whether correction of work is required, in accordance with provisions of Section 01740.

B. ENGINEER and OWNER's REPRESENTATIVE will promptly notify CONTRACTOR, in writing, of any observed deficiencies.

PART 2 - PRODUCTS

Not Used

PART 3 - EXECUTION

Not Used

****END OF SECTION****

SECTION 01720

PROJECT RECORD DOCUMENTS

PART 1 - GENERAL

1.01 DESCRIPTION OF WORK

A. The work under this Section includes, but is not necessarily limited to, the maintenance, recording and submittal of Project Record Documents as herein specified.

B. The CONTRACTOR shall provide the ENGINEER with one record copy of:

1. Drawings and Addenda.
2. Specifications and Addenda.
3. Change orders and other modifications to the Contract
4. OWNER's REPRESENTATIVE and ENGINEER field orders or written instructions
5. Reviewed shop drawings, product data and samples
6. Field test records
7. Manufacturer's certificates
8. Daily work activity reports, including if existing:

a. Field test records
b. Photographs
c. Reports on emergency response actions
d. Records of all site work
e. Chain-of-custody documents
f. Laboratory test records
g. Meteorological records
h. Daily inspection records
i.. Reports on all safety and accident incidents
j. Reports on all spill incidents
k. Air monitoring reports and data
l. Manifest documents, truck-load tickets and shipping papers
m. Security records
n. Other items that may be required by Owner
o. Log of control and survey work

C. Other Documents: Manufacture's certifications, inspection certifications, field test records required by individual Specifications Sections.

1.02 MAINTENANCE OF DOCUMENTS AND SAMPLES

A. Storage

1. Store documents and samples in CONTRACTOR's field office apart from documents used for construction.
2. Provide files and racks for storage of documents.
3. Provide locked cabinet or secure storage space for storage of samples.

B. File documents and samples in accordance with format of these Specifications.

C. Maintenance

1. Maintain documents in a clean, dry, legible condition and in good order.
2. Do not use record documents for construction purposes.

D. Make documents and samples available at all times for inspection by OWNER.

1.03 RECORDING

A. Label each document "PROJECT RECORD" in neat, large-printed letters.

B. Recording

1. Record information concurrently with construction progress.
2. Do not conceal any work until required information is recorded.

C. Drawings: Record drawings shall be reproducible (vellum or mylar), shall have a title block indicating that the drawings are record drawings, the name of the company preparing the record drawings and the date the record drawings were prepared. The CONTRACTOR will be provided paper sepias of the Contract Drawings, at the cost of reproduction, or he may elect to provide reproducible drawings via another method. Legibly mark drawings to record actual construction:

1. Field changes of dimension and detail.
2. Changes made by Requests for Information (RFI), field order or by change order.
3. Details not on original Contract Drawings.

D. Specifications: Legibly mark each section to record:

1. Manufacturer, trade name, catalog number, and supplier of each product and item of equipment actually installed.
2. Changes made by Requests for Information (RFI), field order or by change order.

E. Additional Drawings: The CONTRACTOR shall also provide record copies of all drawings in addition to the Contract Drawings that were developed by the Contractor for design-build purposes.

1.04 SUBMITTAL

A. At Contract closeout, deliver record documents in the form of a Final Construction Report to the OWNER.

B. Accompany submittal with transmittal letter, in duplicate, containing:

1. Date
2. Project title and number
3. CONTRACTOR's name, address, and telephone number
4. Title and number of each record document
5. Signature of CONTRACTOR's authorized representative.

PART 2 - PRODUCTS

Not Used

PART 3 - EXECUTION

Not Used

****END OF SECTION****

SECTION 01740

WARRANTIES

PART 1 - GENERAL

1.01 PROJECT MAINTENANCE AND WARRANTY

A. Maintain and keep in good repair the Work covered by this Contract until acceptance by the OWNER.

B. The CONTRACTOR shall warrant for a period of one year from the date of OWNER's written acceptance of certain segments of the Work and/or OWNER's written final acceptance of the Project, as defined in the Contract Documents, that the completed Work is free from all defects due to faulty products or workmanship and the CONTRACTOR shall promptly make such corrections as may be necessary by reason of such defects. The OWNER will give notice of observed defects with reasonable promptness. In the event that the CONTRACTOR should fail to make such repairs, adjustments or other work that may be made necessary by such defects, the OWNER may do so and charge the CONTRACTOR the cost thereby incurred.

C. The CONTRACTOR shall not be obligated to make replacements which become necessary because of ordinary wear and tear, or as a result of improper operation or maintenance, or as a result of improper work or damage by another CONTRACTOR or the OWNER, or to perform any work which is normally performed by a maintenance crew during operation.

D. The CONTRACTOR shall, at CONTRACTOR's own expense, furnish all labor, materials, tools and equipment required and shall make such repairs and removals and shall perform such work or reconstruction as may be made necessary by any structural or functional defect or failure resulting from neglect, faulty workmanship or faulty materials, in any part of the Work performed by the CONTRACTOR. Such repair shall also include refilling of trenches, excavations or embankments which show settlement or erosion after backfilling or placement and reseeding grass-lined drainage ditch to meet 75% cover requirement, if necessary.

E. Except as noted on the Drawings or as specified, all structures shall be returned to their original condition prior to the completion of the Contract. Any and all damage to any facility not designated for removal, resulting from the CONTRACTOR's operations, shall be promptly repaired by the CONTRACTOR at no cost to the OWNER.

F. In the event the CONTRACTOR fails to proceed to remedy the defects upon notification within 15 days of the date of such notice, the OWNER reserves the right to cause the required materials to be procured and the work to be done, as described in the Drawings and Specifications, and to hold the CONTRACTOR and the sureties on CONTRACTOR's bond liable for the cost and expense thereof.

G. Notice to CONTRACTOR for repairs and reconstruction will be made in the form of a registered letter addressed to the CONTRACTOR at CONTRACTOR's home office.

H. Neither the foregoing paragraphs nor any provision in the Contract Documents, nor any special guarantee time limit implies any limitation of the CONTRACTOR's liability within the law of the place of construction.

PART 2 - PRODUCTS

Not Used

PART 3 - EXECUTION

Not Used

****END OF SECTION****

DIVISION 2

SECTION 02010

SUBSURFACE CONDITIONS

PART 1 - GENERAL

1.01 DESCRIPTION OF WORK

A. CONTRACTOR shall review information available from previous investigations, visit the Site, and become thoroughly familiar with Site conditions to the extent necessary to complete the Work. It shall be the CONTRACTOR's obligation to satisfy himself as to the nature, character, quality, and quantity of the subsurface conditions.

1.02 AVAILABLE INFORMATION

A. Subsurface investigations have been performed at the Site, including, but not limited to installation of, exploratory boreholes, monitoring well, and test pits. This information can be found in the following documents:

1. Pre-Design Investigation Report, Golder Associates Inc., May 2002.
2. Focused Feasibility Study, Golder Associates Inc., May 2002.
3. Preliminary Design Report, Golder Associates Inc., January 2003.

These reports and other information pertinent to the Site conditions may be reviewed at the offices of the ENGINEER or the public repositories.

B. The Site subsurface conditions information provided in the referenced documents or other documents available for review and not otherwise shown on the Contract Drawings, is not a part of the Contract Documents, and is offered only as an aid in Bidding. The subsurface information is available for CONTRACTOR's information only and is not a warranty or guarantee of subsurface conditions. Neither the OWNER nor the ENGINEER assumes any responsibility for any variation between subsurface materials encountered during construction and those indicated in the referenced information, including, but not limited to, any variation in the depth to groundwater, bedrock elevation, contaminated soil thickness, cover thickness, or any other variation.

1.03 ADDITIONAL INVESTIGATION

A. CONTRACTOR shall perform their own subsurface investigations after approval from ENGINEER and OWNER's REPRESENTATIVE, as necessary to complete design of excavation, shoring or other work. CONTRACTOR shall obtain the right to access private property located on the Site and shall assume all responsibility for any damage to property, including any third party damage claims, caused as a result of CONTRACTOR's investigation. CONTRACTOR shall be entirely responsible for the proper backfilling/sealing of test borings in accordance with applicable state and local regulations and for the proper handling and disposal of IDW, including soil cuttings, PPE, decontamination liquids, etc.

PART 2- PRODUCTS

Not Used.

PART 3 - EXCAVATION

Not Used.

*****END OF SECTION****

SECTION 02070

MONITORING WELL ABANDONMENT

PART 1 - GENERAL

1.01 DESCRIPTION OF WORK

A. The CONTRACTOR shall furnish all labor, materials, equipment, tools, services, and related items necessary to complete the work of locating, abandoning, and sealing groundwater monitoring well CC-11 as shown on the Contract Drawings.

B. All wells shall be abandoned by a Pennsylvania-licensed well driller.

1.02 SUBMITTALS

A. At the completion of each monitoring well abandonment, the driller will submit copies of the well abandonment report to the ENGINEER.

B. The CONTRACTOR, prior to commencing well abandonment activities, shall submit in writing for favorable review the name, location, permits, certificates, licenses, for the proposed transporter and off-site disposal facilities for construction debris generated as a result of well abandonment activities. The CONTRACTOR shall not commence well abandonment activities until the ENGINEER has accepted the transporter and off-site disposal facility recommended by CONTRACTOR.

1.03 GUIDANCE DOCUMENTS

A. Monitoring wells shall be abandoned in accordance with USEPA (if applicable) and PADEP Monitoring Well Guidelines, including but not limited to, the Groundwater Monitoring Guidance Manual, Section 7.0 (Well Abandonment Procedures), PADEP, 1996.

PART 2 - PRODUCTS

2.01 CEMENT

A. Type II Portland Cement shall be used in the grout mixture.

2.02 BENTONITE

A. Bentonite used in the grout mixture shall be 30 mesh granular bentonite or finer.

PART 3 - EXECUTION

3.01 GENERAL

A. The well shall be abandoned to prevent the entrance of surface water, circulation of water between or among producing zones, or any other process resulting in the contamination or pollution of groundwater resources.

B. The well shall be abandoned in such a manner that it does not become a channel for the vertical movement of water or other substance to potable groundwater resources.

3.02 MONITORING WELL ABANDONMENT

The following proper procedures and materials shall be used:

A. Locate all monitoring wells to be abandoned as shown on the Contract Drawings. Verify the location with the ENGINEER.

B. Remove protective outer steel casing and dispose of at the accepted, off-site disposal facility favorably reviewed by ENGINEER. If the well is completed as an open rock well, cut surface casing at ground surface and decommission by grouting as described in Articles 3.02 E through 3.02 J, below.

C. If inner casing is present, pull the inner well casing from the well, if possible. The CONTRACTOR shall supply the appropriate equipment to remove the well casings.

D. Overdrill boreholes using a drill bit of at least 2 inches greater in diameter than those used to create the borehole, overdrill the depth listed on the well log by at least 2 feet, and drill out all casings and screens not removed by pulling.

E. Measure overdrilled borehole depth and determine that the borehole is free from obstructions.

F. Calculate the grout volume required to backfill the open borehole.

G. Place via tremie techniques a neat cement grout into the borehole until the grout reaches the ground surface. Neat cement grout shall be mixed at a rate of 1 bag (94 lb) Portland cement to 6.0 gallons of clean, potable water. The CONTRACTOR shall provide sufficient quantities of clean, potable water to complete this work.

H. Allow grout to cure and settle for at least 24 hours and place additional grout, if required, until the borehole is backfilled flush to the ground surface.

I. Cover cured grout with compacted soil and mark location with stake and flagging.

J. Collect, haul and dispose of all materials generated by the well abandonment activities (e.g., inner and outer casings, screens, concrete, bollards, cuttings, etc.) at the accepted disposal facility.

*****END OF SECTION*****

SECTION 02090

DEMOLITION

PART 1 - GENERAL

1.01 DESCRIPTION OF WORK

A. The work includes demolition of existing equipment, trailers, tanks, structures, retaining walls, and other items as shown on the drawings, salvage of identified items and materials, and removal of resulting rubbish and debris

B. Material salvage shall be pursued to the maximum extent possible' salvage items and materials shall be disposed of as specified.

C. CONTRACTOR shall furnish all materials, labor, tools and appurtenances required to complete the work as described below. CONTRACTOR shall provide a "Competent Person", as defined by OSHA 29CFR Part 1926 to implement, supervise, and inspect all Work.

D. CONTRACTOR shall comply with applicable codes, ordinances, rules, regulations and laws of local, municipal, state or federal authorities having jurisdiction.

1.02 RELATED SECTIONS

A. Dust Control – Section 01562

B. Decontamination – Section 02431

1.03 PROTECTION:

A. Protection of Existing Property: Before beginning any demolition work, the CONTRACTOR shall carefully survey the site and examine the drawings and specifications to determine the extent of the work. The CONTRACTOR shall take all necessary precautions to avoid damage to existing items to remain in place, to be reused, or to remain the property of the Site Owner, and any damaged items shall be repaired or replaced as approved by the ENGINEER at no additional cost to the CSDG. The CONTRACTOR shall carefully coordinate the work of this section with all other work and shall construct and maintain shoring, bracing and supports, as required. The CONTRACTOR shall ensure that structural elements are not overloaded and shall be responsible for increasing structural supports or adding new supports as may be required as a result of any cutting, removal, or demolition work performed under this contract.

B. Protection from the Weather: Salvageable materials and equipment shall be protected from the weather at all times.

PART 2 - PRODUCTS

Not Used

PART 3 - EXECUTION

A. Existing Structures and Miscellaneous Debris: The tanks and connected piping shall be pumped and emptied of all liquids and sediment by the CONTRACTOR r. These items will be decontaminated and disposed by the CONTRACTOR offsite. The CONTRACTOR shall check for asbestos prior to decontamination or cutting. All other debris, including pipe, drums, containers, totes, boilers, truck trailers and tanks, shall be decontaminated and disposed of at an offsite landfill or salvage yard. Any existing drums containing waste or virgin materials shall be inventoried and staged on-site.

B. Utilities: CONTRACTOR shall verify the disconnection and de-energizing of all electric wiring, motors, and control devices. Underground conduit shall be removed from within the boundaries of the proposed cap.

C. Filling: Holes and other hazardous openings shall be filled with crushed masonry, concrete or soil, in accordance with Section 02223 Backfill and Fill.

D. Disposition of Material: Title to materials and equipment to be demolished, is vested in the CONTRACTOR upon receipt of Notice to Proceed. The CSDG will not be responsible for the condition, loss or damage to such property after Notice to Proceed.

E. Salvageable Items and Materials: CONTRACTOR shall salvage items and materials to the maximum extent possible.

F. Material Salvaged for the CONTRACTOR: Material salvaged for the CONTRACTOR shall be stored on-site as approved by the ENGINEER and shall be removed from the property before completion of the contract. Material salvaged for the CONTRACTOR shall not be sold on the site.

G. Unsalvageable Materials: Concrete, masonry, and other noncombustible materials, shall be placed under the cap to the extent grades permit. Surplus material shall be transported and disposed off-site at a licensed landfill or construction debris recycling facility. Combustible materials shall be disposed of off the site.

H. Decontamination: Decontamination shall comply with Section 02431 - Decontamination.

I. Stockpiles: Material shall be segregated and stored in container or stockpiled on Site. No stockpiling or storage of material is permitted within the Transco Gas Pipeline Right of Way.

J. Clean-up: Debris and rubbish shall be removed from excavations. Debris shall be removed and transported in a manner that prevents spillage on streets or adjacent areas. Local regulations regarding hauling and disposal shall apply.

****END OF SECTION****

SECTION 02100

SITE PREPARATION

PART 1 - GENERAL

1.01 DESCRIPTION OF WORK

A. The CONTRACTOR shall furnish all permits, materials, labor, equipment, tools and appurtenances required to complete the Work as described herein. The CONTRACTOR shall provide a "Competent Person" to implement, supervise and inspect all Work.

B. This Section describes materials and equipment to be utilized and requirements for their use in preparing the Site for construction.

C. The CONTRACTOR shall comply with applicable codes, ordinances, rules, regulations and laws of local, municipal, State or Federal authorities having jurisdiction.

D. Remove all surface debris is areas designated on the Contract Drawings and dispose of surface debris at an approved off-site facility. Surface debris removal will be performed to facilitate mowing and brush clearing during future operation and maintenance activities.

E. Protect and maintain existing wells, structures, fences, benchmarks, monuments and other reference points, and any other features or improvements that will remain after the Work, as shown on the Contract Drawings. Protect existing facilities, utilities, and structures from damage due to construction. CONTRACTOR shall immediately repair or replace any damage as determined by ENGINEER at CONTRACTOR's own cost.

F. Protect and maintain benchmarks, monuments and other reference points. Re-establish, at no cost to the OWNER, any such reference points if disturbed or destroyed. The CONTRACTOR's surveyor shall conduct a survey of all monuments and property markers within proposed Work areas prior to any disturbance so that they can be re-established after completion by the CONTRACTOR as part of this Contract.

G. Protect and maintain any existing groundwater monitoring wells, SVE wells, utility poles, and all other facilities to remain in place.

H. Protect any existing facilities, utilities, and structures from damage due to construction.

1.02 SUBMITTALS

A. CONTRACTOR shall submit in writing to ENGINEER, 3 weeks prior to initiating surface debris removal activities, the name, location, permits, certificates, licenses, and any other information required by the ENGINEER

pertaining to the transporter and off-site facility the CONTRACTOR proposes to use for the disposal of removed surface debris. CONTRACTOR shall not commence surface debris removal activities until CSDG Representative has favorably reviewed said transporter and facility.

1.03 RELATED SECTIONS

A. Dust Control – Section 01562

B. Health and Safety Specifications for Construction – Section 01564

C. Site Clearing and Grubbing – Section 02110

D. Soil Erosion and Sedimentation Control – Section 02125

E. Excavation – Section 02220

F. Backfill and Fill – Section 02223

1.04 DEFINITIONS

A. Surface Debris: Surface debris is defined as any refuse material found within the work areas on the ground surface comprised of plastic, metal, wood, cloth, rubber, concrete, fiberglass, rock, brick, or similar materials that is greater than 6 inches in the largest dimension located on the ground surface, such as tanks, drums, pallets, truck parts, containers, steel drums, or other items. Materials which are partially buried in the ground, cannot be readily removed from the ground without excavation, and do not protrude from the ground surface by more than 12 inches are not considered surface debris.

PART 2 – PRODUCTS

Not Used.

PART 3 - EXECUTION

3.01 SURFACE DEBRIS REMOVAL

A. CONTRACTOR shall remove surface debris from all areas of the Site designated on the Contract Drawings and dispose of such materials at an approved and licensed off-site Facility approved by OWNER or ENGINEER.

B. CONTRACTOR shall perform surface debris removal activities within an area prior to commencing any clearing and grubbing activities.

C. CONTRACTOR shall remove all surface debris within the limits of clearing and construction.

D. Drums or other containers encountered during debris removal containing liquids or solids of unknown chemical composition shall not be moved and the CSDG Representative and/or ENGINER shall be notified immediately.

E. The CONTRACTOR is responsible for safely and securely handling materials of unknown composition to ensure that releases of contaminants to the environment do not occur. If such releases occur, CONTRACTOR is responsible for the cleanup of said releases at CONTRACTOR's own expense. Materials will be securely and safely staged on-Site until the results of the classification are determined. Classification results will be presented to the ENGINEER upon receipt. Subsequent to receipt of classification results and approval from the ENGINEER, CONTRACTOR will be responsible for the appropriate handling and disposal of all materials, hazardous, or otherwise, at a licensed off-site facility.

F. CONTRACTOR is responsible for any and all activities and duties associated with the handling, temporary storage, arranging, characterization, obtaining regulatory approvals, transporting, disposing, and certifying proper disposal of the surface debris removed from the Site.

*****END OF SECTION*****

SECTION 02110

CLEARING AND GRUBBING

PART 1 - GENERAL

1.01 DESCRIPTION OF WORK

A. The CONTRACTOR shall furnish all materials, labor, equipment, tools and appurtenances required to complete the work as described below. The CONTRACTOR shall provide a "Competent Person" to implement, supervise, and inspect all Work.

B. Clearing and grubbing should be limited to the extent possible.

1. Clearing, which includes mowing of vegetation in work areas, as needed, to a maximum height of 12 inches, and flush cutting of woody vegetation to or below the firm ground surface in Work Areas; and,
2. Grubbing, which includes the removal of trees, stumps, roots, brush, shrubs, rocks, and other vegetation matter from the cover soils, within approximately 4 inches of the surface in preparation for construction activities as specified in the Contract Documents.

C. The CONTRACTOR shall comply with applicable codes, ordinances, rules, regulations and laws of local, municipal, State or Federal authorities having jurisdiction.

D. No clearing and grubbing shall be allowed without adequate erosion and sedimentation control measures in-place to the satisfaction of the ENGINEER and as described in the Contract Documents.

1.02 RELATED SECTIONS

A. Dust Control – Section 01562

B. Contingency Plan for VOC / Odor – Section 01563

C. Health and Safety Specifications for Construction – Section 01564

D. Site Preparation – Section 02100

E. Temporary Soil Erosion and Sedimentation Control – Section 02125

F. Site Grading – Section 02210

G. Excavation – Section 02220

H. Backfill and Fill – Section 02223

PART 2 - PRODUCTS

A. The CONTRACTOR shall furnish equipment of the type normally used in clearing and grubbing operations including, but not limited to, dozers, shears, skidders, loaders, root rakes, chipping equipment and stump grinders. This equipment shall be the size and have the capacity to efficiently complete the work.

PART 3 - EXECUTION

3.01 CLEARING

A. Clearing should be limited to locations required for construction.

B. Flush cut all woody vegetation, including but not limited to trees, brush, and shrubs. Stumps of woody vegetation shall not extend greater than 2 inches above the adjacent firm ground surface.

C. Haul all cleared herbaceous vegetation to areas within the Site, as designated by ENGINEER.

D. Remove woody vegetation from the ground surface and haul to areas within the Site as designated by ENGINEER.

E. Chip, shred, and secure stockpile all cleared vegetation and in areas identified by the ENGINEER and maintain in a condition for potential use as mulch for construction areas.

F. CONTRACTOR shall be responsible to protect from damage and harm all existing structures and/or improvements, cover soils, wells, vents, fencing, roads, and persons and property. Damage caused by CONTRACTOR shall be immediately repaired at the CONTRACTOR's own expense.

3.02 GRUBBING

A. Grubbing should be limited to locations required to complete construction.

B. Grubbing shall consist of removing tress, roots, stumps, brush, rocks, shrubs, and other vegetation matter from the cover soils within approximately 4 inches of the surface from all construction areas so that remaining surface material is mostly free of organic debris. Surface material is to be left sufficiently clean so that further picking and raking will not be required in order to vegetate the area or to place and compact fill or backfill on the construction areas

C. Any work around utility poles and guy wires shall comply with the requirements of the appropriate utility.

D. The CONTRACTOR shall be held liable for repairing any disturbance outside the designated work areas.

E. The CONTRACTOR shall be responsible and shall protect existing wells, vents, roads, and fencing or other structures and/or improvements from damage due to construction activities. Damaged structures shall be immediately repaired or replaced by the CONTRACTOR and the CONTRACTOR's expense.

3.03 DISPOSAL OF DEBRIS

A. Debris (i.e., stumps, roots, branches, leaves etc.) resulting from the Site clearing and grubbing operations shall be removed to the approved on-Site relocation area(s) designated by the ENGINEER.

B. All trees and shrubs from the clearing operation shall be chipped on-Site. Chipped material and other organics resulting from clear and grub operations shall be disposed off-site by the CONTRACTOR. Chipped material from portions of trees and shrubs above grade (trunks, branches) may be composted and used as mulch on revegetated areas or for temporary erosion control measures.

C. Unchippable material such as tree roots and over diameter logs shall be removed and disposed of at an approved off-site disposal facility.

*****END OF SECTION*****

SECTION 02125

TEMPORARY AND PERMANENT EROSION AND SEDIMENTATION CONTROL

PART 1 - GENERAL

1.01 DESCRIPTION OF WORK

A. The CONTRACTOR shall provide all materials and promptly take all actions necessary to achieve effective erosion and sedimentation control in accordance with all applicable Federal, State, and local enforcing agency guidelines and these Specifications. Some of the contents of this Section may not be directly applicable to this Work, but are included as a contingency if unanticipated circumstances occur.

B. The Contract Documents shall be considered minimum requirements for erosion and sedimentation control and shall not relieve the CONTRACTOR of the responsibility to actively take all steps necessary to control soil erosion and sedimentation in all areas associated with the Work. The CONTRACTOR shall provide a "Competent Person" to implement, supervise, and inspect all erosion and sediment control work.

C. The CONTRACTOR shall comply with applicable codes, ordinances, rules, regulations and laws of local, municipal, State or Federal authorities having jurisdiction. The CONTRACTOR is responsible for obtaining a general Erosion and Sediment Control Plan permit for Chester County Soil Conservation District.

D. The CONTRACTOR shall not proceed with construction until its Site-specific Erosion and Sediment Control Plan is approved by the Chester County Soil Conservation District.

E. The CONTRACTOR shall repair and/or replace any materials damaged by erosion or covered with sedimentation after CONTRACTOR's mobilization to Site at the CONTRACTOR'S own expense.

F. Soil erosion and sedimentation control measures shall be provided by the CONTRACTOR for all construction activities, as well as other related work throughout the Site. CONTRACTOR shall replace installed items as deemed necessary.

G. Temporary erosion and sedimentation control features installed by the CONTRACTOR shall be maintained by the CONTRACTOR until no longer needed as determined by the ENGINEER, or permanent erosion and sedimentation control methods are installed/established.

H. It shall be the sole responsibility of the CONTRACTOR to schedule properly and coordinate all necessary labor, equipment, and materials such that the specified Work is performed in accordance with the Construction Schedule and the Contract requirements. The ENGINEER may reject or direct the CONTRACTOR to repair, at the CONTRACTOR's own expense, those items which are detrimental to the

Work or not in compliance with the Contract Documents. Such direction or rejection by the ENGINEER shall not relieve the CONTRACTOR of his obligation to properly schedule and perform other specified Work items in conformance with the Contract Documents.

1.02 RELATED SECTIONS

A. Health and Safety Specifications for Construction – Section 01564

B. Site Preparation – Section 02100

C. Site Clearing and Grubbing – Section 02110

D. Site Grading – Section 02210

E. Excavation – Section 02220

F. Backfill and Fill – Section 02223

G. Seeding - Section 02936

1.03 SUBMITTALS

A. The CONTRACTOR shall submit manufacturer's material data sheets and guidelines for installation of silt fence and other manufactured erosion and sediment control devices as necessary for the Work.

B. At the pre-construction meeting, the CONTRACTOR shall submit for ENGINEER's favorable review, a schedule and construction drawing for accomplishment of temporary and permanent erosion and sedimentation control work for each phase of the CONTRACTOR's activities, as are applicable for clearing and grubbing, grading, stormwater management upgrades, and general construction. No work shall be started until the erosion control schedules and methods of operations for each phase of construction have been accepted by the ENGINEER. This plan will be referred to as the CONTRACTOR's Soil Erosion and Sediment Control Plan.

C. CONTRACTOR must provide resume of "Competent Person" for favorable review by ENGINEER.

PART 2 - PRODUCTS

2.01 SILT FENCE

A. Silt fences shall be a woven geotextile attached to wooden or steel posts as detailed on the Contract Drawings or as recommended by the manufacturer.

2.02 BALES

A. Straw bales shall be clean, seed-free oat or wheat types.

2.03 SEEDING

A. In accordance with Section 02936 of these Specifications.

2.04 TREES AND SHRUBBERY

A. (Reserved).

2.05 FERTILIZER

A. In accordance with Section 02936 of these Specifications.

2.06 MULCH

A. Straw mulch shall be oat or wheat straw, free from weeds, foreign matter detrimental to plant life, and dry. Hay or chopped cornstalks are not acceptable. Straw mulch shall be properly anchored.

B. Wood fiber mulch shall consist of wood fiber produced from clean, whole-uncooked wood, formed into resilient bundles having a high degree of internal friction, and shall be dry when delivered to the Site.

C. Mulch shall be applied at a rate of 2 tons per acre.

2.07 WATER

A. In accordance with Section 02936 of these Specifications.

2.08 LIME

A. In accordance with Section 02936 of these Specifications.

2.09 TEMPORARY EROSION CONTROL MAT

A. Temporary Erosion Control Mat shall be BonTerra S2, Erosion Control Systems Inc.'s High Impact Excelsior Mat, or approved equal.

2.10 PERMANENT EROSION CONTROL MAT

A. Permanent Erosion Control Mat shall be Enkamat, Bon Terra SFB, or approved equal.

2.11 STONE RIPRAP

A. Stone riprap shall be as defined in Section 02271 of these Specifications.

PART 3 - EXECUTION

3.01 GENERAL

A. Conduct earthwork and excavation activities in such a manner to fit the topography, soil type, and condition.

B. Minimize the area being disturbed and the duration of exposure to erosion elements (see Article 3.01(I)).

C. Stabilize disturbed areas immediately.

D. Retain on-Site, sediment that was generated on-Site. Sediment collected on-site shall be dewatered, and then disposed under the proposed fill areas.

E. Prevent silt and sediment from entering any watercourse if soil erosion cannot be prevented.

F. Prevent silt and sediment from migrating downstream in the event it cannot be prevented from entering the watercourse.

G. Where provisions of pertinent rules and regulations conflict with these Specifications, the more stringent provisions shall govern.

H. The ENGINEER has the authority to limit the surface area of erodible material exposed by clearing and grubbing, and to direct the CONTRACTOR to provide immediate temporary or permanent control measures to prevent sediment impacts on adjacent watercourses.

I. Where erosion is likely to be a problem, clearing and grubbing operations should be scheduled and performed such that grading operations and permanent erosion control features can follow immediately thereafter, if the Work conditions permit; otherwise, erosion control measures may be required between successive construction stages.

J. The ENGINEER will limit the area of construction commensurate with the CONTRACTOR's capability and progress in keeping the final grading, mulching, seeding and other such permanent control measures current in accordance with the accepted schedule. Should seasonal limitations make such coordination unrealistic, temporary erosion control measures shall be taken immediately to the extent feasible and justified.

K. In the event that additional temporary erosion and sedimentation control measures are required due to the CONTRACTOR's negligence, carelessness or failure to install permanent controls as a part of the Work schedule, or are ordered by the ENGINEER, such Work shall be performed by the CONTRACTOR, at no additional cost to the OWNER, and no time extensions shall be granted.

3.02 TEMPORARY EROSION AND SEDIMENTATION CONTROL

A. Temporary erosion and sedimentation control measures shall be used to correct conditions that develop during construction and lead to soil erosion or deposition of waterborne sediments; that are needed prior to installation of permanent erosion and sedimentation control features; or that are needed temporarily to control erosion and/or sedimentation that develops during normal construction practices, but are not associated with permanent control features for the Work.

B. Temporary erosion and sedimentation control devices shall be installed and maintained prior to initial land disturbance activities and until satisfactory completion or establishment of permanent erosion control measures. At that time, temporary measures shall be removed.

C. The CONTRACTOR shall coordinate the installation of temporary erosion and sedimentation control provisions contained herein with the permanent erosion control features, to ensure economical, effective and continuous erosion control throughout the construction and post-construction period.

D. Silt fences, barriers, temporary sedimentation basins, and other temporary measures shown on the CONTRACTOR's approved Site-specific Erosion and Sediment Control Plan shall be installed as indicated and shall be maintained until no longer needed or as determined by the ENGINEER. At that time, the items shall be removed by the CONTRACTOR. All temporary items and devices must be removed with the approval of the ENGINEER prior to final demobilization from the Site.

E. Where permanent vegetation is not appropriate and where the CONTRACTOR's temporary erosion and sedimentation control practices are inadequate, the CONTRACTOR shall provide a temporary vegetative cover. Such temporary cover shall be provided by the CONTRACTOR in compliance with Section 02936 of these specifications.

F. All erosion and sedimentation control devices shall be inspected by the CONTRACTOR at least weekly, after each rainfall occurrence, and cleaned out, and repaired by the CONTRACTOR, as necessary.

3.03 TEMPORARY EROSION AND SEDIMENT CONTROL TECHNIQUES

A. Temporary Diversion Berms

1. A temporary diversion berm is constructed of compacted soil, with or without a shallow ditch, at the top of fill slopes.
2. These diversion berms are used temporarily at the top of newly constructed slopes to prevent excessive erosion until permanent controls are installed or slopes stabilized.
3. A temporary diversion berm shall be constructed of compacted soil, with a minimum width of 24 inches at the top and a minimum height of 12 inches with or without a shallow ditch. Side slopes shall be three

horizontal to one vertical (3H:1V) or flatter. The minimum longitudinal (crest) slope is 1%; while the maximum is 5%.

4. The maximum contributing drainage area for a temporary diversion berm is 3 acres.

B. Sediment Control Structures

1. Sediment basins, ponds, and traps are prepared storage areas constructed to trap and store sediment from erodible areas in order to protect stream channels below the construction areas from excessive siltation.
2. Sediment structures shall be utilized to control sediment where slope drains outlet. All sediment structures shall be at least twice as long as they are wide.
3. When use of temporary sediment structures is to be discontinued, all sediment accumulation shall be removed, excavation backfilled, and properly compacted. The existing ground shall be restored to its natural or intended condition.

C. Straw Bales

1. Straw bales are temporary measures to control erosion and retain the suspended silt particles in the runoff water leaving disturbed areas. Bales shall contain five (5) cubic feet or more of material.
2. Straw bales shall be embedded in the ground 4 to 6 inches to prevent water flowing under them. The bales shall also be anchored securely to the ground by stakes or rods driven through the bales into the ground, as indicated on the Contract Drawings. Bales shall be removed after they have served their purpose, as determined by the ENGINEER.
3. The CONTRACTOR shall keep the bales in good condition by replacing broken or damaged bales immediately after damage occurs. Normal debris clean out will be considered routine maintenance.
4. Straw bales shall be used at the toe of fill slopes, in ditches, or other areas where siltation, erosion, or water run-off is a problem.
5. Bales shall be placed so that the predominant direction of the straw stalk is oriented perpendicular to the surface water flow direction.

D. Silt Fences

1. Silt fences are temporary measures utilizing woven wire or other approved materials attached to posts with a woven geotextile attached to the upstream side of the fence to retain the suspended silt particles in the runoff water.
2. Temporary silt fences shall be placed on the natural ground, at the toe of fill slopes, in ditches around soil stockpiles or other areas where siltation, erosion, or water run-off is a problem. Temporary silt fences shall be anchored as indicated on Contract Drawings.
3. The CONTRACTOR shall be required to maintain silt fences in a satisfactory condition for the duration of the Work or until its removal is requested by the ENGINEER. The silt accumulation at the fence shall be removed and placed on-Site as directed by the ENGINEER.

4. A grass strip 5 feet (minimum) wide shall remain in-place immediately down gradient of each silt fence.

E. Temporary Erosion Control Matting

1. Temporary erosion control mat shall be installed immediately after seeding.
2. Any area disturbed and inactive for more than 15 days shall receive temporary seeding (unless permanent seeding is more appropriate) and temporary erosion control matting.

F. Temporary Stabilized Construction Entrance

1. Temporary stone construction entrance shall be installed at the location shown on the Contract Drawings.

G. Temporary Vegetation

1. Temporary vegetation measures consist of seeding, mulching, fertilizing, and matting utilized to reduce erosion. All cut and fill slopes shall be seeded when and where necessary to eliminate erosion. Disturbed or bare soil areas shall not be left without stabilization for more than thirty (30) days.
2. Seeding, fertilizing, and mulching shall be performed in accordance with Section 02936 of these Specifications.
3. If late fall completion prevents germination; disturbed areas shall be protected by mulching without application of seed, as a minimum.

3.04 PERMANENT EROSION AND SEDIMENT CONTROL

A. The CONTRACTOR shall incorporate all permanent erosion control features into the Work at the earliest practicable time as outlined in the CONTRACTOR's Soil Erosion and Sediment Control Plan, accepted Construction Schedule, or as land disturbance for each segment of the Work has been completed.

B. Restore the Site to its original contours, unless otherwise shown on the Contract Drawings or as directed by the ENGINEER.

C. All references to permanent vegetation, unless noted otherwise, shall relate to establishing permanent vegetative cover and be in accordance with Section 02936 of these Specifications.

D. When final grades have been established, all bare soil, unless otherwise required by the Contract Documents, shall be seeded, fertilized, and mulched in an effort to restore to a protected condition. Areas that are not successfully stabilized with seed and mulch within thirty (30) days of seeding shall be reseeded at the CONTRACTOR's own expense to the satisfaction of the ENGINEER.

E. Specified permanent vegetation shall be established at the first appropriate season following establishment of final grading in each section of the Site.

F. Permanent vegetative cover activities shall comply with local soil and water conservation guidelines.

G. Where permanent vegetative cover cannot be immediately established (due to season or other circumstances) the CONTRACTOR shall provide temporary vegetative cover.

3.05 PERMANENT EROSION AND SEDIMENT CONTROL TECHNIQUES

A. Permanent Vegetation: All references to permanent vegetation, unless noted otherwise, shall relate to establishing permanent vegetative cover and be in accordance with Articles 2.03 to 2.08, inclusive, of this Section. Initial seeding of permanent vegetation shall occur within ten (10) days of final grading. Permanent vegetation will require a stand of growth of at least 80%, within one (1) year of the initial seeding, or the CONTRACTOR shall re-seed at no cost to the OWNER. The CONTRACTOR, at the direction of the ENGINEER, shall selectively cut the established first growth after one (1) year.

*****END OF SECTION*****

SECTION 02140

CONSTRUCTION DEWATERING

PART 1 - GENERAL

1.01 DESCRIPTION OF WORK

A. CONTRACTOR shall remove the accumulated water from the two existing excavations in the Former Disposal Area prior to the removal of vegetative matter and backfilling of the two existing excavations. CONTRACTOR shall be responsible for characterization, treatment, and/or disposal of any water generated during dewatering activities.

B. Performance of excavation activities may require the CONTRACTOR to divert stormwater from infiltrating open excavations and removing water collected in open excavations as necessary. CONTRACTOR shall design, construct and maintain all dikes, sumps, and diversion and drainage channels as necessary to protect areas being excavated from water damage. CONTRACTOR shall remove temporary works after they have served their purpose.

C. CONTRACTOR shall be responsible for the stability of all temporary and permanent slopes, grades, foundations, materials and structures during the course of the Contract. Repair and replace all slopes, grades, foundations, materials and structures damaged by water, both surface and subsurface, to the lines, grades and conditions existing prior to the damage, at no additional cost to OWNER.

D. CONTRACTOR shall provide a "Competent Person" to implement, supervise and inspect all Work.

E. CONTRACTOR shall provide measures to minimize accumulation of surface water in the work area.

PART 2 - PRODUCTS

Piping, pumping equipment, and all other equipment and materials required for dewatering shall be suitable for the intended purpose. Standby pumping units shall be maintained at the Site to be used in case of failure of the normal pumping units.

PART 3 - EXECUTION

3.01 HANDLING OF WATER

A. Design, furnish, install, maintain, monitor, operate and remove necessary pumping and other equipment for dewatering the various parts of the Work, and for maintaining the work areas free from water, as required, for excavation activities.

B. Dewater by means which will enable completion of the Work and preserve final lines and grades.

C. All pumping and drainage shall be done with no damage to property or structures and without interference with the rights of the public, owners of private property, pedestrians, vehicular traffic or the Work of other contractors, and in accordance with all Federal, State, and local laws, ordinances and regulations.

D. Do not overload or obstruct existing drainage facilities.

E. Segregate and collect all water that contacts open soil in excavations in accordance with Section 02402, "Liquids Handling and Disposal".

F. After they have served their purpose, remove all temporary protective work at a time, and in a manner, approved by the ENGINEER. All temporary diversion channels and other temporary excavations in areas where the compacted fill or other structures that were constructed shall be cleaned out, backfilled and processed under the same Specifications as those governing the compacted fill (Section 02223, "Backfill").

G. When the temporary works will not adversely affect any item of permanent work on the planned usage of the project, CONTRACTOR may be permitted to leave such temporary works in place. In such instances, breaching of dikes, and other temporary works may be required.

3.02 DEWATERING

A. By the use of pumps, tile drains or other approved methods, CONTRACTOR shall control the flow and accumulation of water into excavated areas, to prevent excessive softening and disturbance of exposed soils in excavations, as necessary for completion of the Work.

B. The system used shall not cause settlement damage to adjacent structures. The CONTRACTOR shall carry out the Work by the use of other methods which will not endanger adjacent structures; all such Work shall be done at the CONTRACTOR's expense.

C. Dewatering of water collected in excavated areas shall be handled in accordance with Section 02402, "Liquids Handling and Disposal".

*****END OF SECTION*****

SECTION 02150

SHORING AND BRACING

PART 1 - GENERAL

1.01 DESCRIPTION OF WORK

A. Shoring and bracing activities may be required for excavation activities near buildings and other structures.

B. The CONTRACTOR shall furnish all labor, materials, equipment, tools and appurtenances required to complete the work of shoring, bracing, and sheeting or sheet piling, necessary to complete the excavations, protect structures, and prevent the loss of ground or caving of excavations or cut slopes, as shown, specified or required, and shall meet all applicable building and safety codes. The CONTRACTOR shall provide a Competent Person, as defined by OSHA 29 C.F.R. Part 1926.650-.652, Subpart B, and other applicable safety requirements, to implement, supervise, and inspect all shoring and bracing.

C. CONTRACTOR shall be solely responsible for proper excavation procedures including, but not limited to, safe slope angles and the design and use of properly designed and installed shoring and bracing systems in accordance with OSHA and other applicable standards and requirements.

D. As required, shoring and bracing shall be designed by the CONTRACTOR's engineer who is a registered Professional Engineer in the Commonwealth of Pennsylvania. Remove all shoring and bracing without disturbing backfill, bedding, haunching, pipes or structures. The presence of the OWNER or ENGINEER shall not relieve the CONTRACTOR of his responsibility to properly design, install and maintain shoring and bracing. The OWNER shall not be the "Competent Person" on the Site. Pressures on sheeting and the stability of the sheeting and bottom of the excavation are dependent not only on soil conditions, but upon many procedures and options available to the CONTRACTOR, such as dewatering, staging of excavation and installation of bracing, flexibility of sheeting, construction equipment used, and time of completing the work. All such factors shall be considered and investigated as necessary in the design of the sheeting and bracing.

E. Comply with applicable codes, ordinances, rules, regulations and laws of local, municipal, State or Federal authorities having jurisdiction.

1.02 RELATED REFERENCES

A. Recommended Technical Provisions for Shoring and Sloping of Trenches and Excavations, U.S. Department of Commerce.

B. Construction Safety and Health Regulations, U.S. Department of Labor, Occupational Safety and Health Administration.

C. Occupational Safety and Health Regulations- Excavations, U.S. Department of Labor, Occupational Safety and Health Administration, 29 CFR Part 1926.

1.03 SUBMITTALS

A. In cases where the excavation cannot be open cut to a safe working angle, in accordance with applicable requirements, or where excavation may jeopardize adjacent site areas or the stability of nearby structures or facilities, the CONTRACTOR shall submit drawings, computations and substantiating data, prepared, signed, and sealed by a Professional Engineer licensed in the Commonwealth of Pennsylvania, showing his proposed cutbacks, shoring and bracing design and method of construction for the approval of the OWNER and ENGINEER prior to the start of such construction.

B. Shoring and bracing systems shall be designed such that removal shall not jeopardize work already performed. Shoring and bracing systems shall not remain permanently in place without the written approval of the OWNER.

C. Any review or comments by the ENGINEER or OWNER shall not relieve the CONTRACTOR of his responsibility for sheeting and bracing.

D. In trenches, the sheeting shall be designed so that the lowest brace is no closer than 12 inches above the base of the structure to be installed.

1.04 QUALITY CONTROL

A. During the installation of the sheeting and bracing and as long as the excavation is open, the CONTRACTOR's "Competent Person" shall monitor the work to ensure that it is carried out in accordance with his design and procedures.

PART 2 - PRODUCTS

All materials shall meet, or exceed, the minimum requirements of the applicable codes and those assumed in the design submitted by the CONTRACTOR.

PART 3 - EXECUTION

3.01 VERIFYING EXISTING CONDITIONS

A. Before commencing work, the CONTRACTOR shall check and verify all governing dimensions and elevations, including field measurements of existing and adjoining work on which his work is dependent, to assure proper fit and clearance of each part of the work to the new and existing structures.

3.02 COORDINATION WITH OTHER OPERATIONS

A. The schedule and progress of the shoring, bracing, and sheeting work shall be coordinated with the excavation work. If, during the progress of the excavation,

lateral movement of the surrounding soils, or any other evidence of instability is discovered, further excavation or backfilling work in the excavation shall cease, and corrective measures shall be taken immediately to prevent further movement.

3.03 REMOVAL OF SHORING AND BRACING MATERIALS

A. Where the CONTRACTOR elects and is permitted not to remove shoring and bracing material, all such material shall be left in places such that the top of the material shall be a minimum of 5 feet below the proposed finished grade.

B. Removal of shoring and bracing shall be carried out in a manner such that no structure shall be disturbed or damaged during or after removal. Protection of structures during the removal of shoring and bracing shall be the sole responsibility of the CONTRACTOR, and any disturbance or damage shall be rectified at no expense to the OWNER.

3.04 SAFETY

A. Installation and removal methods of shoring and bracing shall meet, or exceed, the minimum requirements of the applicable codes and safety precautions as outlined in such codes, and shall be enforced by the CONTRACTOR.

*****END OF SECTION*****

SECTION 02210

SITE GRADING

PART 1 - GENERAL

1.01 DESCRIPTION OF WORK

A. The CONTRACTOR shall furnish all labor, materials, equipment, tools and appurtenances required to complete the Work of rough and finish site grading for areas to receive geomembrane capping and/or soil cover, embankments, site drainage, and general landscaping necessary for restoration of utility areas, trenches, and the overall Site. The CONTRACTOR shall provide a "Competent Person" to implement, supervise, and inspect the Work.

B. The CONTRACTOR shall comply with applicable codes, ordinances, rules, regulations and laws of local, municipal, State or Federal authorities having jurisdiction.

1.02 RELATED SECTIONS

A. Field Engineering/Surveying – Section 01050

B. Dust Control – Section 01562

C. Odor Control – Section 01563

D. Health and Safety Specifications for Construction – Section 01564

E. Site Preparation – Section 02100

F. Site Clearing and Grubbing – Section 02110

G. Excavation – Section 02220

H. PCB Contaminated Soil Excavation and Disposal – Section 02221

I. Backfill and Fill – Section 02223

J. Cover Soil – Section 02224

K. Aggregate Materials – Section 02233

1.03 QUALITY ASSURANCE

A. Testing shall be provided by the CONTRACTOR in accordance with applicable Sections of these Specifications as outlined in Article 1.02.

B. Tolerances in accordance with those specified in individual Sections of these Specifications as outlined in Article 1.02 herein.

1.04 GENERAL

A. Notify corporations, companies, individuals or authorities owning above- or below-ground conduits, wires, pipes or other utilities running to the property prior to the start of the Work.

B. Protect, support, and maintain conduits, wires, pipes or other utilities that are to remain in accordance with the requirements of the Contract Documents, and/or as required by the ENGINEER, and/or utility company.

1.05 SUBMITTALS

A. In accordance with Section 01300 and other applicable Sections of these Specifications as outlined in Article 1.02 herein.

PART 2 - PRODUCTS

2.01 MATERIALS

A. In accordance with applicable Sections of these Specifications as outlined in Article 1.02 herein.

PART 3 - EXECUTION

3.01 PREPARATION

A. Examine surfaces to receive fill to determine existence of areas loosened by frost action, softened by flooding or weather, or of unsuitable materials.

B. Fill settled areas that were previously filled and where excavations or trenches were backfilled and holes made by demolition, tree removal, and other Site preparation work.

C. Natural soils or compacted fill softened by frost, flooding or weather shall be removed, replaced with soils of similar characteristics, and compacted.

D. Remove unsuitable material from under access roads and driveway areas.

E. Maintain adequate drainage of the Site. Remove standing/ponded water prior to grading.

F. Grading within the influence zones of existing or future structures or piping and electrical conduits shall be in accordance with Sections 02220 and 02223 of these Specifications.

3.02 FILLING AND GRADING

A. Perform in accordance with Section 02223 of these Specifications.

B. Stockpile material suitable for backfill where indicated on the Contract Drawings or designated by the ENGINEER. Place no fill where trenches for sewers, water lines, or other utilities will be located.

C. Place and grade materials not suitable for backfilling or grading and unsuitable materials in designated relocation areas or as directed by the ENGINEER.

D. Grade to the design criteria specified by the Contract Documents. The design criteria required positive sloping (with no ponding water), existing grade maintained.

E. It is the responsibility of the CONTRACTOR to verify grades prior to the installation of any SVE wells, conduits, monitoring wells, or any apparatus. CONTRACTOR shall maintain performance criteria for conduit/piping sloping and maximum/minimum depth below ground surface.

3.03 CLEANING

A. Excess materials shall be removed, stockpiled, or otherwise disposed of by the CONTRACTOR at the direction of the ENGINEER.

***** END OF SECTION *****

SECTION 02220

EXCAVATION

PART 1 - GENERAL

1.01 DESCRIPTION OF WORK

A. Excavation shall be required for the installation of the soil vapor extraction piping, the removal of contaminated soil, and as required in other areas as part of the Work.

B. The CONTRACTOR shall furnish all labor, materials, equipment, tools and appurtenances required to complete the work of excavation; mass excavation stripping and removal of topsoils; excavation and relocation of excavated soils to designated areas, moving and loading of soils onto vehicles or containers for off-site disposal, and other related and incidental work within the designated area and as required for the completion of the excavation work, as shown, specified or required.

C. The CONTRACTOR shall locate all existing active and abandoned utilities and structures in work areas prior to commencing any excavation activities and shall protect from damage those utilities and structures which are to remain in place. The CONTRACTOR shall coordinate with PA One Call and the OWNER to locate utilities.

D. Comply with applicable codes, ordinances, rules, regulations and laws of local, municipal, State or Federal authorities having jurisdiction.

1.02 DEFINITIONS

A. Excavation shall mean the removal from place of all materials and shall include soil, facilities, structures above and below ground, pavements, topsoil, demolition waste material, boggy waste, rubbish, tree stumps, boulders, logs, ashes, cinders, organic material such as peat, humus or organic silt, softened or disturbed soils or other unsuitable bearing materials.

B. Mucking or mucking-out shall mean excavation, as defined herein before, without prior dewatering to remove excess water.

1.03 PROTECTION OF PEOPLE AND PROPERTY

A. CONTRACTOR is responsible for stability and safety of all CONTRACTOR's excavations at all times regardless of the requirements of this Section.

B. The CONTRACTOR shall plan and conduct his operations so as to prevent damage to existing structures, safeguard people and property, minimize traffic inconvenience, protect the structures to be installed and provide safe working conditions.

C. Excavations, except as specified hereinafter, shall be adequately shored and braced. Where the installation of shoring is impractical or might cause damage, as a result of, but not limited to, vibration, settlement or lateral movement, the CONTRACTOR shall utilize other methods.

D. Excavation may be made without sheeting and bracing within the limitations and requirements, per OSHA 29 C.F.R. Part 1926.650-.652, Subpart B, and other applicable safety requirements, provided that:

1. Hazards, such as described herein before, do not exist in the proximity of the excavation.
2. Work is not in streets or other paved, landscaped or improved areas that are not the property of the OWNER.
3. Work can be restricted to the land provided for the CONTRACTOR's use.
4. Sheeting and bracing are not specifically required by the Contract Documents.
5. Where excavation depths exceed 5 feet and shoring and bracing is not proposed by the CONTRACTOR, the CONTRACTOR shall submit a certification by a Professional Engineer licensed in the Commonwealth of Pennsylvania, indicating the maximum slope of the sides of the excavation proposed, and that said slopes will be stable under all weather and working conditions for the period that the excavation will be open. Such certification shall be based on the CONTRACTOR's own subsurface exploration and consideration of the options available to the CONTRACTOR such as dewatering, construction equipment, and proximity of spoil area. Any review of comments by the OWNER or ENGINEER shall not relieve the CONTRACTOR of his responsibility arising from the excavation.

E. In cases where excavation without shoring and bracing is not permissible solely because of protection of workers, trench boxes may be used.

F. The CONTRACTOR shall not stockpile any excavated material, within 5 feet of the excavation edge.

G. Prior to exposing subgrades for placement of backfill, the area of the Work shall be surrounded by a diversion berm to contain surface runoff accumulating within the berm and exclude surface runon from areas surrounding the Work. The CONTRACTOR shall employ excavation methods which minimize the need to remove accumulated water from excavations.

1.04 SITE CONDITIONS

A. Borehole logs and geotechnical laboratory analyses of samples are included in the PDI Report and FFS Report available at the Public Repository, or the office of the ENGINEER.

PART 2 - PRODUCTS

2.01 All materials shall be as defined on the Contract Drawings or in the Contract Documents.

2.02 Subgrade material shall include that earthen material excavated by the CONTRACTOR for soil remediation activities.

2.03 Unsuitable material shall include any topsoil, soft or non-bearing soils, mulch, waste materials, debris, wood waste, organic material, peat, humus, or any other material deemed unsuitable and required to be removed by the ENGINEER.

PART 3 - EXECUTION

3.01 LIMITS OF EXCAVATION

A. Excavation to bedrock is not envisioned as part of this Contract. However, the following classifications of excavation will be used to determine when rock is encountered in work.

1. Earth excavation includes excavation of pavements and other obstructions visible on ground surface; underground facilities, utilities, and other items indicated to be removed; together with earth and other materials encountered that are not classified as rock or unauthorized excavation.

B. Unauthorized excavation consists of: removal of materials below the limits specified in the Contract Documents and indicated subgrade elevations or dimensions shown on the Contract Drawings without specific direction of the ENGINEER.

Unauthorized excavation, as well as work directed by ENGINEER, shall be at CONTRACTOR's expense.

Elsewhere, backfill and compact unauthorized excavations as specified for authorized excavations of same classification at CONTRACTOR's expense, unless otherwise directed by ENGINEER.

C. Additional Excavation: When excavation has reached required subgrade elevations, notify ENGINEER.

1. If unsuitable bearing materials are encountered at required subgrade elevations carry excavations to develop suitable bearing and replace excavated material.
2. Further removal of unsuitable material and its replacement will be made based on results of proofrolling.
3. If during excavation it is found that, in the opinion of the ENGINEER, the existing soils below the excavation grades required by the Contract Drawings are unsuitable bearing materials, they shall be removed; the new exposed subgrade compacted, and the areas refilled to the specified subgrade elevation with structural fill as specified in Section 02223,

"Backfill". Unsuitable bearing materials shall include miscellaneous fill, topsoil or soil containing organic materials, or other such materials.

4. If unsuitable materials are encountered in trenches at specified subgrade elevations for crushed stone or aggregate bedding beneath pipes, or other drainage structures, they shall be removed; the new exposed subgrade compacted, and the areas refilled to the specified bedding subgrade elevation with coarse aggregate as specified in Section 02233, "Coarse Aggregate". Unsuitable materials for bedding beneath pipes or other drainage structures shall include miscellaneous fill, topsoil or soil containing organic materials,
or other such materials.

D. Stability of Excavations: Slope sides of excavations to comply with local codes and ordinances having jurisdiction. Shore and brace in accordance with Section 02150, "Shoring and Bracing" where sloping is not possible because of space restrictions or stability of material excavated. Comply with all OSHA 29 C.F.R. Part 1926.650 - .652, Subpart B, and other applicable safety requirements.

Maintain sides and slopes of excavations in safe condition until completion of backfilling.

E. Maintenance of Open Excavations: The CONTRACTOR shall be responsible for constructing temporary erosion and control measures, including stormwater diversion berms, necessary to protect all excavations from collapse. The CONTRACTOR shall also erect a temporary fence around each excavation that will remain open at the end of a construction day.

3.02 MATERIAL STORAGE

A. Stockpile excavated materials classified as unsuitable for use as fill or backfill material shall be placed and graded in a location as directed by the ENGINEER.

B. Locate and retain soil materials away from edge of excavations, where the weight of the material could create a surcharge on such edge, whether sheeted or not. Do not store within drip line of trees indicated to remain.

3.03 EXCAVATION

A. Excavation for Structures: Conform to elevations and dimensions shown on the Contract Drawings within a tolerance of plus or minus 0.10 feet, and extending a sufficient distance from footings and foundations to permit over excavation of unsuitable materials, compaction, placing and removal of concrete formwork, installation of services, other construction, and for inspection.

B. Excavation for Trenches: Excavate trenches to the uniform width required for particular item to be installed, sufficiently wide to provide ample working room, or as shown on Contract Drawings. All utility trench excavation to be sufficiently wide to accommodate mechanical compaction equipment (minimum 12 inches) on both sides of pipe.

1. Excavated trench with depth greater than 4'-0" shall be considered a confined space and shall be excavated and utilities installed in conformance with the requirements of the CONTRACTOR's Health and Safety Plan.
2. All excavated material shall be removed from the area at time of excavation, and stockpiled on-site as directed by the ENGINEER.
3. Barricades and signs warning of open ditch shall be erected to protect personnel working in the area.
4. Excavate trenches to depth indicated or required to allow placement of specified thickness of bedding materials beneath the bottom of all barrels, bells or couplings of all pipes installed. Carry depth of trenches for piping to establish indicated flow lines and invert elevations.
5. Do not backfill trenches until tests and inspections have been made and backfilling authorized by the ENGINEER. The CONTRACTOR shall use care in backfilling to avoid damage to, or displacement of, pipe or foundation systems.
6. Trench dewatering shall be in accordance with Section 02140, "Construction Dewatering" of these Specifications. If inadequate dewatering causes softening of the subgrade, CONTRACTOR shall at its expense excavate softened subgrade and backfill with structural fill as specified in Section 02223, "Backfill".

C. Excavation for Open Areas: Excavate locations to the size required by the Contract Drawings or as directed by the ENGINEER.

1. An excavated area with a depth greater than 4'-0" shall be considered a confined space. If workers are required to enter the area, the requirements of the CONTRACTOR's Health and Safety Plan shall be followed.
2. All excavated material shall be removed from the area at time of excavation, and stockpiled on-site as directed by the ENGINEER.
3. Temporary fencing, barricades and signs warning of open excavation shall be erected to protect personnel working in the area.

D. Following excavations, the CONTRACTOR shall regrade and add compacted fill as needed in order to achieve required surface for placement of materials as shown on the Contract Drawings. All visible sharp protruding objects shall be removed or covered with a minimum of 12 inches of compacted fill.

E. CONTRACTOR shall remove all unsuitable material (and all objects greater than 6 inches) within 24 inches of a swale/channel, or as directed by ENGINEER, and replace same with compacted fill.

F. Protect excavation bottoms against freezing. No fill or structures shall be allowed to be placed on frozen materials or subgrades softened as a result of freeze/thaw action.

***** END OF SECTION *****

SECTION 02221

SOIL EXCAVATION AND DISPOSAL

PART 1 - GENERAL

1.01 DESCRIPTION OF WORK

A. The CONTRACTOR shall furnish all materials, labor, equipment, tools and appurtenances required to complete the Work as described below.

B. Contaminated soil must be excavated from the areas identified in the Contract Documents and as shown on the Contract Drawings. This activity includes hauling and stockpiling of excavated soil on-site for characterization and disposal or loading of excavated soils into roll-off boxes for transport off-site for disposal by CONTRACTOR.

C. Comply with applicable codes, ordinances, rules, regulations and laws of local, municipal, State or Federal authorities.

D. Analytical sampling and testing of the excavated soil will be performed by the CONTRACTOR in accordance with the Sampling and Analysis Plan.

1.02 HEALTH AND SAFETY REQUIREMENTS

A. Work shall be performed in compliance with all applicable health and safety and OSHA regulations and in accordance with the CONTRACTOR's Health and Safety Plan.

PART 2 - PRODUCTS

2.01 Temporary Cover: Material used for covering of excavated soil on a daily basis.

2.02 Contaminated Soil: Materials excavated from the Site as part of the remedial excavation.

2.03 Soil Remediation Pile Areas: Locations on the site for temporary storage of contaminated soil.

PART 3 - EXECUTION

3.01 PREPARATION OF SOIL EXCAVATION AREAS

A. The CONTRACTOR shall survey and stake the eight corners of the excavation area for review by the ENGINEER prior to the start of excavation. Protect bench marks, and existing structures from excavation equipment and vehicular traffic and from collapse of excavation. Provide shoring and bracing, when required.

3.02 EXCAVATION

A. Divert surface water flows within the channel upgradient of the work area around the work area in accordance with Section 02140.

B. Excavate to required grades and dimensions as per the Contract Documents

C. Do not perform excavations outside of the limits of excavation or below the proposed subgrade without written approval of the OWNER and ENGINEER.

D. Notify ENGINEER of unexpected subsurface conditions and discontinue affected Work in area until notified by OWNER to resume Work.

E. Dewater excavation area sufficiently dry to allow for backfilling. Any water pumped from excavation shall be handled and disposed per Section 02402 (Liquids Handling and Disposal).

F. Transport excavated soil to the specified soil remediation stockpile areas. Implement methods to contain spillage along haul route such as decon pad at excavation, line haul route with plastic and protective geotextile, or others.

3.03 SOIL REMEDIATION PILE AREAS

A. CONTRACTOR shall coordinate with the OWNER and ENGINEER locations on site for temporary storage of construction debris (asphalt, etc.) and uncontaminated topsoil.

B. The CONTRACTOR shall prepare the soil stockpile area as shown on the Contract Drawings. The subgrade shall be prepared relatively flat and lined with 6 mil polyethylene sheeting. Earthen berm shall be constructed around the perimeter of the soil stockpile area to prevent the runoff into and out of the soil piles.

C. The soils in the remediation pile areas shall be covered with secured liners to protect the soils from inclement weather (i.e., wind, additional moisture from rainfall events, etc.) at all times. .

D. Provide erosion and sediment control measures around stockpile in accordance with Section 02125.

E. Maintain stockpile limits, cover and erosion and sediment control structures until disposed by CONTRACTOR.

F. Stockpile height shall be no more than 10 feet and slope shall be minimized to avoid sloughing of soil.

3.04 FIELD QUALITY CONTROL

A. Provide for visual inspection of excavated surfaces and soil.

B. Inspect soil stockpile cover and liners for integrity on a daily basis.

C. Inspect soil erosion prevention devices.

3.05 SOIL EXCAVATION SURVEY CONTROL

A. The CONTRACTOR shall complete an initial survey prior to excavation and shall survey the final dimensions and depths of the excavation in the presence of the ENGINEER and submit a topographic map of the pre-excavation and final excavation area to the OWNER REPRESENTATIVE for review prior to backfilling.

B. Following backfilling and final grading of the excavation area, the CONTRACTOR shall survey the backfilled and graded area previously excavated and provide to the OWNER and ENGINEER a final topographic map of the disturbed area.

***** END OF SECTION *****

SECTION 02224

CAP COVER SOIL AND CAP CUSHION SOIL

PART 1 - GENERAL

1.01 DESCRIPTION OF WORK

A. The CONTRACTOR shall furnish all labor, materials, equipment, tools and appurtenances required to complete portions of the Work requiring cover soil/cushion soil/soil cover placement. The work of this Section includes the acquisition, placement, grading, and compaction of cover soil /cushion soil/soil cover materials, material handling, and other related and incidental work within the designated areas and as required for the construction of other work, as shown, specified, or required by the Contract Documents.

B. The CONTRACTOR shall comply with applicable codes, ordinances, rules, regulations and laws of local, municipal, State or Federal authorities having jurisdiction. The CONTRACTOR shall provide a "Competent Person" to implement, supervise, and inspect the Work.

1.02 DEFINITIONS

A. Cap Cover Soil: Cap cover soil is defined as the 18-inch soil layer atop the geomembrane cap

B. Cap Cushion Soil: Cap cushion soil is defined as the 6-inch soil layer below the geomembrane cap

1.03 PROTECTION OF PEOPLE AND PROPERTIES

A. The CONTRACTOR shall plan and execute the Work so as to prevent damage to existing structures, safeguard people and property, minimize traffic inconvenience, protect structures to be installed, and provide safe working conditions.

B. Work shall be performed in accordance with all applicable health and safety and OSHA regulations and in accordance with the CONTRACTOR's Site-specific Health and Safety Plan.

PART 2 - PRODUCTS

2.01 GENERAL

A. All imported materials from off-site borrow sources shall be approved by the USEPA, if necessary, and the ENGINEER and the OWNER's REPRESENTATIVE prior to use. The ENGINEER, and/or the OWNER's REPRESENTATIVE may visit the proposed borrow areas. All imported materials shall meet the chemical requirements of Article 2.05F herein.

B. No frozen materials shall be used for cover soil/cushion soil. All imported materials shall be free from organic materials, wood, trash, and all deleterious and objectionable materials which may be compressible or which cannot be properly compacted. Imported materials shall not contain rock fragments, broken concrete, masonry rubble, or other similar materials. It shall have physical properties such that it can be readily spread and compacted. Snow, ice, and frozen soil shall be removed from fill material prior to placement if the ENGINEER and/or the QUALITY ASSURANCE OFFICIAL judges this will prevent the material from performing as required.

C. No imported material shall exceed 30% moisture content at the time of delivery to the Site.

2.02 CAP COVER SOIL

A. Cap cover soil material shall be environmentally clean borrow material from an off-site borrow source approved by the ENGINEER and the OWNER's REPRESENTATIVE. Concentrations of volatile organic compounds shall be below the Soil Cleanup Standards contained in the ROD, and shall meet the requirements for Clean Fill, as specified in the Pennsylvania Department of Environmental Protection (PADEP) policy for Clean Fill, dated April 24, 2004, whichever is more stringent. Borrow material proposed for use as cap cover soil shall be free of deleterious and organic matter, be non-plastic, and conform to the gradation requirements as specified in Article 2.02B hereinafter.

B. Cap cover soil material shall be well-graded and meet the following requirements:

U.S. Standard Sieve Size	Percent Passing by Weight
1 inch	100%
No. 4	65-90%
No. 10	35-70%
No. 200	5-30%

2.03 CAP CUSHION SOIL

A. Cap cushion soil material shall be environmentally clean borrow material from an off-site borrow source approved by the ENGINEER and the OWNER's REPRESENTATIVE. Concentrations of volatile organic compounds shall be below the Soil Cleanup Standards contained in the ROD, and shall meet the requirements for Clean Fill, as specified in the Pennsylvania Department of Environmental Protection (PADEP) policy for Clean Fill, dated April 24, 2004, whichever is more stringent. Borrow material proposed for use as cap cushion soil shall be free of deleterious and organic matter, be non-plastic, and conform to the gradation requirements as specified in Article 2.03B hereinafter.

B. Cap cushion soil material shall meet the following requirements:

U.S. Standard Sieve Size	Percent Passing by Weight
1 inch	100%
No. 4	65-90%
No. 10	35-70%
No. 200	5-30%

2.04 TESTING

A. The CONTRACTOR shall, twenty-one (21) days prior to use of proposed materials, submit certification to the ENGINEER that the materials proposed for cap cover soil, cap cushion soil, and soil cover comply with the Specifications for the various components of construction. This certification shall include the following tests for each type of material and each material source:

1.	Gradation	ASTM D422
2.	Atterberg Limits	ASTM D4318
3.	Standard Proctor	ASTM D698
4.	Moisture Content	ASTM D2216 or D4643
5.	Specific Gravity	ASTM D854
6.	Coefficient of Friction*	ASTM D5321

* Coefficient of friction testing shall be conducted for actual project specific materials as described in Section 02590.

B. The CONTRACTOR shall be responsible for testing. Testing shall be performed by a specialized laboratory that has been favorably reviewed by the ENGINEER and/or QUALITY ASSURANCE OFFICIAL. The frequency of testing shall be once per every 5,000 cy of each material delivered or once per each material source, whichever is greater.

C. The CONTRACTOR shall submit to the ENGINEER certification of compliance along with a minimum of 100 pounds of each proposed material from each source that is proposed for use.

D. The CONTRACTOR shall not proceed with the use of the material(s) until the ENGINEER and the OWNER's REPRESENTATIVE have favorably reviewed the proposed materials.

E. If in the opinion of the ENGINEER and/or QUALITY ASSURANCE OFFICIAL, the CONTRACTOR's proposed material is unsuitable for the proposed application, the CONTRACTOR shall submit the above certification for material of another type or from another source for consideration.

F. Certify and submit evidence that off-site materials are free from chemical and organic contamination. Submit written certification (i.e., analytical test results) indicating that the proposed materials are environmentally clean. Concentrations of volatile organic compounds shall be below the Soil Cleanup Standards contained in the ROD, and shall meet the requirements for Clean Fill, as specified in the Pennsylvania Department of Environmental Protection (PADEP)

policy for Clean Fill, dated April 24, 2004, whichever is more stringent. Analytical testing for virgin sources shall be one (1) grab sample per 5,000 cubic yards or less delivered.

G. The ENGINEER and/or the QUALITY ASSURANCE OFFICIAL may at any time request the collection of samples of imported materials for additional analytical and/or index property testing at the OWNER's expense. Any imported materials from off-site borrow sources found to not be in accordance with the Specifications, or found to be contaminated, shall immediately be removed and replaced with suitable materials at the CONTRACTOR's expense with no time extensions in the Construction Schedule granted.

PART 3 - EXECUTION

3.01 PRECAUTIONS

A. Portions of the Work requiring the placement of cover soil and cushion soil materials shall not be performed with frozen materials or over frozen materials, snow, ice, and/or uncompacted subgrades.

3.02 STORAGE

A. Stockpile satisfactory excavated and imported materials where directed by the ENGINEER until required for placement. Place, grade and shape stockpiles to provide proper drainage. Install appropriate erosion and sediment control devices around stockpiles.

B. Locate and retain stockpiled soil materials in a location where the weight of the stockpiled materials will not create surcharge loading conditions on the excavation edges.

3.03 PLACEMENT

A. Cap cover soil materials shall not be placed until the geosynthetic components and/or prepared subgrade (cushion soil) has been inspected in-place and approved by the QUALITY ASSURANCE OFFICIAL and/or ENGINEER.

B. Cap cover soil and cap cushion soil placement shall not exceed the elevations depicted on the Contract Drawings.

C. Employ a placement method that does not disturb or damage other work. Puddling will not be permitted.

D. Make gradual grade changes. Blend slope into level areas.

E. Grading tolerance for the cover soil, cushion soil, and soil cover shall be -0.0 to +0.1 feet.

F. Placement of the cap cover soil shall be with low ground pressure equipment (5 psi contact pressure) with a minimum of 12 inches of soil material between the equipment and the geosynthetics.

3.04 COMPACTION REQUIREMENTS

A. Compaction of the cap cover soil above the geocomposite drainage layer, shall be achieved by repeated passes as provided by the spreading equipment or other method favorably approved by the ENGINEER. Such equipment shall be tracked and not have rubber tires.

B. Compaction at the cap cushion soil shall be to 95% of the maximum Standard Proctor dry density.

3.05 FIELD QUALITY ASSURANCE/CONTROL

A. The CONTRACTOR shall be responsible for conducting any and all quality control testing necessary for CONTRACTOR's purposes. Ensure that materials placed do not exceed maximum thicknesses as required by the Contract Documents.

B. All Work shall be performed in accordance with the requirements of the Remedial Action Construction Quality Assurance Plan.

***** END OF SECTION *****

SECTION 02223

BACKFILL AND FILL

PART 1 - GENERAL

1.01 DESCRIPTION OF WORK

A. The CONTRACTOR shall furnish all labor, materials, equipment, tools and appurtenances required to complete portions of the Work requiring backfill and fill. The work of this Section includes the acquisition, placement, grading, and compaction of backfill and fill materials, and other related and incidental work within the designated areas, and as required, for the construction of other work, as shown, specified, or required by the Contract Documents.

B. The CONTRACTOR shall comply with applicable codes, ordinances, rules, regulations and laws of local, municipal, State or Federal authorities having jurisdiction. The CONTRACTOR shall provide a "Competent Person" to implement, supervise, and inspect the Work.

C. The CONTRACTOR is responsible for following all health and safety precautions applicable to excavations and trenches during backfilling operations in accordance with the Occupational Safety and Health Administration (OSHA).

1.02 PROTECTION OF PEOPLE AND PROPERTY

A. The CONTRACTOR shall plan and execute the Work so as to prevent damage to existing structures, safeguard people and property, minimize traffic inconvenience, protect structures to be installed, and provide safe working conditions.

B. Work shall be performed in accordance with all applicable health and safety and OSHA regulations and in accordance with the CONTRACTOR's Site-specific Health and Safety Plan.

1.03 SUBMITTALS

A. At least 15 days prior to used of proposed materials, CONTRACTOR shall submit to the ENGINEER certification that the soils proposed for backfill and fill comply with the Specifications prescribed herein. The certification shall include, at a minimum, the results of the tests listed in Part 2 below.

B. CONTRACTOR shall submit to the ENGINEER certification of compliance along with two buckets of each material from each source that is proposed for use on the Site.

1.04 RELATED SECTIONS

A. Clearing and Grubbing – Section 02110

B. Temporary and Permanent Erosion and Sedimentation Control – Section 02125

C. Shoring and Bracing – Section 02150

D. Excavation – Section 02220

E. PCB Contaminated Soil Excavation and Disposal – Section 02221

F. Aggregate Materials– Section 02233

G. Seeding – Section 02936

1.05 DEFINITIONS

A. Select Backfill Material shall consist of clean borrow material meeting the requirements of Article 2.04.

B. Cover soil shall consist of clean soil from on-site or off-site soil approved by the ENGINEER and meeting the requirements of Article 2.05.

C. Granular materials shall consist of clean aggregate, rock, stone, or gravel from off-site sources approved by the ENGINEER meeting the requirements of Sections 02233 and 02271 of these Specifications.

PART 2 - PRODUCTS

2.01 GENERAL

A. All backfill and fill materials shall consist of suitable materials from excavated on-site or off-site sources, and all materials shall be approved by the ENGINEER prior to placement.

B. All imported materials from off-Site borrow areas shall be favorably reviewed by the ENGINEER prior to use. The ENGINEER may visit the proposed borrow areas.

C. No frozen materials shall be used for backfill, fill, or any other materials specified herein. All imported materials shall be free from organic materials, wood, trash, and all deleterious and objectionable materials which may be degradable or which cannot be properly compacted. Imported materials shall not contain rock fragments, broken concrete, masonry rubble greater than the maximum dimensions specified in Articles 2.02 through 2.05 herein, as appropriate, or other similar materials. It shall have physical properties such that it can be readily spread and compacted. Snow, ice, and frozen soil shall be removed from fill material prior to placement.

D. Fill is required for bringing the Site to required subgrade elevation. This fill may be obtained from off-Site borrow or may be material available on-Site from the Work of other Sections. On-Site materials proposed for use as fill shall be

favorably reviewed by the ENGINEER prior to use. Fill shall be in accordance with Article 2.03 herein.

2.02 CLEAN FILL

A. Except for on-Site excavated waste materials reused as fill in accordance with Section 02220 of these Specifications and Article 2.01 herein, all imported soil materials shall be clean fill provided from environmentally clean sources favorably reviewed by the USEPA, if necessary, and the ENGINEER, and shall be free of clay and deleterious materials. Clean fill shall meet the chemical requirements of Article 2.05E herein.

2.03 GENERAL FILL

A. General Fill shall be a natural soil material which meets the requirements of Clean Fill and shall be free of organic materials, wood, trash, debris, and all deleterious and objectionable materials which may be compressible or which cannot be properly compacted.

B. General Fill shall not contain particles with maximum dimensions exceeding two-thirds of the specified loose lift thickness, and shall satisfy the gradation requirements provided below:

Opening or Sieve Size	Percent Passing by Weight
3 inch	90-100
No. 4	50-100
No. 200	0-30

2.04 STRUCTURAL BACKFILL

A. Structural Backfill shall be composed of non-organic, hard, durable soil or gravel material. Structural Backfill material shall meeti the requirements for Clean Fill. Structural Backfill shall not contain rock over 2 inches in greatest dimension and no greater than 10% of materials that pass the No. 200 sieve.

2.05 LOW PERMEABLE BACKFILL

A. Low Permeable soil shall consist of homogeneous, fine-grained cohesive soils which are free of debris, rock, organic, frozen materials, foreign objects and excessive silt. Low permeable soil shall have less than 1×10^{-05} cm/sec hydraulic transmissivity.

2.06 TESTING

A. The CONTRACTOR shall, twenty-one (21) days prior to use of proposed materials, submit certification to the ENGINEER that the materials proposed for backfill and fill comply with the Specifications for the various components of construction. This certification shall include the following tests for each type of material and each material source:

1.	Particle Size	ASTM D422
2.	Atterberg Limits	ASTM D4318
3.	Standard Proctor	ASTM D698
4.	Moisture Content	ASTM D2216 or D4643
5.	Specific Gravity	ASTM D854

B. The CONTRACTOR shall be responsible for quality control testing. Testing shall be performed by a specialized laboratory that has been favorably reviewed by the ENGINEER. The frequency of testing shall be once per every 5,000 cy of each material delivered or once per each material source, whichever is greater.

C. The CONTRACTOR shall submit to the ENGINEER certification of compliance along with a minimum of 100 pounds of each proposed material from each source that is proposed for use.

D. The CONTRACTOR shall not proceed with use of the materials until the ENGINEER have favorably reviewed the proposed materials.

E. If in the opinion of the ENGINEER, the CONTRACTOR's proposed material is unsuitable for the proposed application, the CONTRACTOR shall submit the above certification for material of another type or from another source for consideration.

F. Certify and submit evidence that off-site materials are free from chemical and organic contamination. Submit written certification (i.e., analytical test results) indicating that the proposed materials are environmentally clean. Concentrations of volatile organic compounds shall be below the Soil Cleanup Standards contained in the ROD, and shall meet the requirements for Clean Fill, as specified in the Pennsylvania Department of Environmental Protection (PADEP) policy for Clean Fill, dated April 24, 2004. Analytical testing for virgin sources shall be one (1) grab sample per 5,000 cubic yards or less delivered.

G. If for some reason, the fill exceeds the analytical criteria, but otherwise can be considered clean, the ENGINEER will consider approving the exception, with the concurrence of the USEPA.

H. The ENGINEER may at any time request the collection of samples of imported materials for additional analytical and/or index property testing at the OWNER's expense. Any imported materials from off-Site borrow sources found to not be in accordance with the Specifications, or found to be contaminated, shall immediately be removed and replaced with suitable materials at the CONTRACTOR's expense with no time extensions in the Construction Schedule granted.

PART 3 - EXECUTION

3.01 PRECAUTIONS

A. Portions of the Work requiring the placement of backfill and fill materials shall not be performed with frozen materials or over frozen materials, snow, ice, and/or uncompacted subgrades.

3.02 STORAGE

A. Stockpile satisfactory excavated and imported materials where directed by the ENGINEER until required for backfill and fill placement. Place, grade and shape stockpiles to provide proper drainage. Install appropriate erosion and sediment control devices around stockpiles.

B. Locate and retain stockpiled soil materials in a location where the weight of the stockpiled materials will not create surcharge loading conditions on the excavation edges.

C. Stockpiles shall be located outside the drip line of established trees.

3.03 BACKFILL PROCEDURES - GENERAL

A. Backfill shall not be placed until the subgrade has been inspected in place, and favorably reviewed by the ENGINEER.

B. Unless otherwise directed, excavations shall be backfilled with the material specified on the Drawings as soon as possible after subgrades are compacted, and the work is inspected, tested and accepted, and permission to backfill has been given by the ENGINEER. Immediately prior to backfilling, all rubbish, debris, forms, loose or disturbed soils and similar materials shall be removed from the excavations.

C. Subgrades to receive backfill shall be compacted and shall appear firm, stable and unyielding. Subgrade surfaces should be compacted with a minimum of four passes of a minimum dynamic force of 8,000 pounds or equivalent and to the satisfaction of the ENGINEER. Areas where receiving subgrades exhibit an unstable condition, such as excessive pumping or movement under the weight of the compaction equipment, shall be excavated and replaced, moisture conditioned, or otherwise stabilized prior to placement of backfill.

D. Backfill shall be brought up evenly on each side of structures when applicable, and for their full length. The thickness of each compacted layer shall not exceed that specified herein unless otherwise directed by the ENGINEER. Care shall be taken to ensure that no damage is done to structures or protective coatings thereon.

E. Fill shall be brought up in essentially horizontal uniform lifts throughout the area. The compacted lift thickness shall not exceed 12 inches unless otherwise noted.

3.04 BACKFILL PROCEDURES - TRENCHES

A. Trenches: Placement of Structural Backfill in trenches shall not be done until such time as pipes and related Work has been favorably reviewed by ENGINEER and as-built survey has been performed by the CONTRACTOR. The CONTRACTOR shall comply with the following trench backfill procedures:

1. Pipes shall be bedded and backfilled as required or as directed by the ENGINEER. Care shall be taken to place and compact bedding material under pipe haunches to ensure continuous contact with, and support of, the pipe. Care shall be taken not to dislodge or damage the pipe.
2. All trenches shall be backfilled to the dimensions shown on the Contract Drawings or as directed by the ENGINEER, as soon as possible, after the pipes have been installed and tested to assure protection against damage.
3. Trenches shall be backfilled by hand to a depth of not less than 12 inches above the crown of the pipe for the full width of the trench.
4. Pipe trenches shall be bedded and backfilled to height of not less than 6 inches above the crown of the pipe with Structural Backfill. Backfill shall be placed from the top of the pea gravel to the required subgrade elevations as shown on the Contract Drawings.
5. Trench bedding and backfill materials shall be uniformly placed in uniform lifts of 6-inch maximum loose thickness. Provide compaction with a compaction effort as required by Article 3.05 herein. The method of compaction shall not damage the pipes. Each layer shall be compacted before the next layer is placed.

3.05 COMPACTION REQUIREMENTS

A. Pipe trench bedding and backfill material (Structural Fill), shall be placed to a height of 6 inches above the crown of the pipe, and shall be placed at the material's natural density resulting from placement by dumping/shoveling.

B. Structural Backfill materials shall be placed and compacted to achieve a minimum density of 95 percent of maximum dry density as determined by the Standard Proctor test. Care shall be taken not to damage any piping or other buried utilities during compaction of the materials, or proof-rolling. The moisture content of the materials shall be such that the specified density may be obtained. Puddling or jetting for compaction will not be permitted. If the CONTRACTOR makes reasonable efforts, as determined by the ENGINEER, to achieve the specified percent compaction but cannot meet the 95% compaction requirement, an alternate percent compaction, agreed upon by the ENGINEER, may be utilized.

C. The fill surface shall be made smooth and free from ruts or indentations at the end of each working day, when precipitation is forecast and/or at the completion of the compaction operations in that area.

D. No fill material shall be placed, spread, or compacted while the lower material is frozen or thawing, during unfavorable weather conditions, or during periods of precipitation.

E. No frozen or thawing fill material shall be placed, spread, or compacted.

F. The entire surface shall be left in a manner to promote surface water run-off at the end of each workday.

3.06 FIELD QUALITY CONTROL

A. Testing of fill and backfill materials shall be performed for each lift by the CONTRACTOR and the results shall be submitted to the ENGINEER for approval. Any areas that do not meet the requirements herein shall be reworked by providing additional compaction effort until acceptable test results are obtained. The CONTRACTOR shall not proceed with a new lift of material until the ENGINEER has confirmed that the previous lift has attained the required density. The CONTRACTOR shall rework by wetting, drying, or recompacting backfill/fill material that is not in compliance with the compaction and moisture content requirements. At his sole convenience and expense, the CONTRACTOR may remove and replace fill materials with prior approval from the ENGINEER.

B. During construction, tests on the in-place backfill and fill materials shall be made by an independent geotechnical testing laboratory employed by the CONTRACTOR, and this laboratory shall perform the following tests:

Property	ASTM Test Method	Frequency of Testing
1. Standard Proctor	D698	A minimum of one (1) test per 5,000 cubic yards per source
2. Field Density	D2922	A minimum of two (2) tests per acre per lift and one per lift per 100 L.F of pipe trench.
3. Field Moisture	D3017	A minimum of two (2) tests per acre per lift and one per lift per 100 L.F of pipe trench.

C. In areas where the degree of compaction is not obtained or the uniformity of materials is not maintained in the opinion of the ENGINEER, additional tests and/or compactive effort will be made as directed by the ENGINEER at no additional cost to the OWNER.

D. The CONTRACTOR shall be responsible for conducting any and all quality control testing necessary for the CONTRACTOR's purposes.

E. Quality assurance testing shall be performed by the ENGINEER in accordance with the Remedial Action Construction Quality Assurance Plan (CQAP).

3.07 SURVEY AND TOLERANCES

A. Survey the limits and elevations of backfill and fill in accordance with Section 01050. All lines and grades shall be surveyed and certified by a Licensed Surveyor registered in the Commonwealth of Pennsylvania.

B. Grading tolerances for all backfill and fill placement shall be 0.0 to +0.1 feet or as approved by ENGINEER. All slopes shall be in accordance with Contract Drawings.

*****END OF SECTION*****

SECTION 02225

VEGETATIVE LAYER

PART 1 - GENERAL

1.01 DESCRIPTION OF WORK

A. The CONTRACTOR shall furnish all labor, materials, equipment, tools and appurtenances required to complete portions of the Work requiring the placement of a vegetative layer. The work of this Section includes the acquisition, placement, and grading of the vegetative layer material, material handling, and other related and incidental work within the designated areas and as required for the construction of other work, as shown, specified, or required by the Contract Documents.

B. The CONTRACTOR shall comply with applicable codes, ordinances, rules, regulations and laws of local, municipal, State or Federal authorities having jurisdiction. The CONTRACTOR shall provide a "Competent Person" to implement, supervise, and inspect the Work.

PART 2 - PRODUCTS

2.01 MATERIALS

A. Soil material used as the vegetative layer shall be loam, sandy loam, or silty loam as defined by the U.S. Department of Agriculture textural classification chart and shall be suitable to support vegetative growth.

B. The vegetative layer shall not contain stones, lumps, roots, or similar objects larger than 2 inches in any dimension.

C. The vegetative layer shall have a pH between 5.8 and 7.6.

D. Provide a material for the vegetative layer that has a minimum organic content of 2.75 percent by weight and a maximum organic content of 5 percent by weight.

E. Soil material used as the vegetative layer must be capable of sustaining vegetation as specified in Section 02936 of these Specifications.

F. Composted material from the clearing and grubbing operations of Section 02110 of these Specifications may be mixed and incorporated into the vegetative layer.

2.02 TESTING

A. The CONTRACTOR shall, twenty-one (21) days prior to use of proposed materials, submit certification to the ENGINEER that the material proposed for the vegetative layer complies with the Specifications for the various components

of construction. This certification shall include the following tests for the material and the material source(s):

1.	Particle Size	ASTM D422
2.	pH	ASTM D4972
3.	Organic Content	ASTM D2974
4.	Soil Fertility	Baker or LaMotte Test

B. The CONTRACTOR shall be responsible for testing. Testing shall be performed by a specialized laboratory that has been favorably reviewed by the ENGINEER. The frequency of testing shall be once per every 5,000 cy of material delivered or once per each material source, whichever is greater.

C. The CONTRACTOR shall submit to the ENGINEER certification of compliance along with a minimum of 100 pounds of each proposed material from each source that is proposed for use.

D. The CONTRACTOR shall not proceed with the use of the material(s) until the USEPA, if necessary, and ENGINEER have favorably reviewed the proposed materials.

E. If in the opinion of the ENGINEER the CONTRACTOR's proposed material is unsuitable for the proposed application, the CONTRACTOR shall submit the above certification for material of another type or from another source for consideration.

F. Certify and submit evidence that off-site materials are free from chemical and organic contamination. Submit written certification (i.e., analytical test results) indicating that the proposed materials are environmentally clean. Concentrations of volatile organic compounds shall be below the Soil Cleanup Standards contained in the ROD, and shall meet the requirements for Clean Fill, as specified in the Pennsylvania Department of Environmental Protection (PADEP) policy for Clean Fill, dated April 24, 2004, whichever is more stringent. Analytical testing for virgin sources shall be one (1) grab sample per 5,000 cubic yards or less delivered.

G. The ENGINEER may at any time request the collection of samples of imported materials for additional analytical and/or index property testing at the OWNER's expense. Any imported materials from off-Site borrow sources found to not be in accordance with the Specifications, or found to be contaminated, shall immediately be removed and replaced with suitable materials at the CONTRACTOR's expense with no time extensions in the Construction Schedule granted.

PART 3 - EXECUTION

3.01 PLACEMENT

A. This item shall consist of the placement of the vegetative layer in all designated areas as shown on the Contract Drawings, in areas disturbed by construction activities, and as directed by the ENGINEER.

B. No vegetative layer material shall be placed until the cap cover soil placement (or backfill, fill, etc.) is complete and approved by the ENGINEER.

C. The vegetative layer shall be placed in a single, 6-inch thick lift. The tolerance for the thickness of the vegetative layer is -0.0 to +0.2 feet.

D. The CONTRACTOR shall take care to ensure that underlying soil remains intact and does not become mixed with the vegetative layer during installation.

E. For portions of the vegetative layer placed in areas designated to receive the geomembrane cap, as shown on the Contract Drawings, the material shall be placed and graded with low ground pressure (contact pressure less than or equal to 5 psi) equipment.

*****END OF SECTION*****

SECTION 02233

AGGREGATE MATERIALS

PART 1 - GENERAL

1.01 DESCRIPTION OF WORK

A. The CONTRACTOR shall furnish all labor, materials, equipment, tools and appurtenances required to complete the work of coarse aggregate within the designated areas, and as otherwise shown on the Contract Drawings or directed in the field by the ENGINEER.

B. The CONTRACTOR shall comply with applicable codes, ordinances, rules, regulations and laws of local, municipal, State or Federal authorities having jurisdiction. The CONTRACTOR shall provide a "Competent Person" to implement, supervise and inspect the Work.

C. The CONTRACTOR is responsible for following all health and safety precautions applicable to trenches during backfilling of trenches.

1.02 SUBMITTALS

A. At least 10 days prior to use of proposed materials, CONTRACTOR shall submit to the ENGINEER certification that the materials proposed for use as coarse aggregate comply with the specifications prescribed herein.

B. CONTRACTOR shall submit to the ENGINEER certification of compliance along with 100 pounds of each proposed coarse aggregate material from each source which is proposed for use.

1.03 RELATED SECTIONS

A. Temporary and Permanent Erosion and Sedimentation Control – Section 02125

B. Backfill and Fill – Section 02223

PART 2 - PRODUCTS

2.01 MATERIAL

A. The materials shall be environmentally clean, sound, tough, durable, crushed stone or gravel as required by this Section, not lumpy, and free from slag, cinders, ashes, rubbish, ice, and deleterious and organic materials. Concentrations of volatile organic compounds shall be below the Soil Cleanup Standards contained in the ROD, and shall meet the requirements for Clean Fill, as specified in the Pennsylvania Department of Environmental Protection (PADEP) policy for Clean Fill, dated April 24, 2004, whichever is more stringent. Subangular and subrounded shall be as defined in ASTM D2488

entitled "Standard Practice for Description and Identification of Soils [Visual-Manual Procedure]."

B. The CONTRACTOR shall provide consistent gradations of approved coarse aggregate throughout the duration of the work.

C. All coarse aggregate shall be obtained from an environmentally clean off-Site borrow source that is favorably reviewed by the ENGINEER. Certify and submit evidence that off-site materials are free from chemical and organic contamination. Submit written certification (i.e., analytical test results) indicating that the proposed materials are environmentally clean. Concentrations of volatile organic compounds shall be below the Soil Cleanup Standards contained in the ROD, and shall meet the requirements for Clean Fill, as specified in the Pennsylvania Department of Environmental Protection (PADEP) policy for Clean Fill, dated April 24, 2004, whichever is more stringent. Analytical testing for virgin sources shall be one (1) grab sample per 5,000 cubic yards or less delivered.

D. Coarse aggregate shall be stored in designated areas approved by the ENGINEER. The CONTRACTOR shall be responsible for maintaining the aggregate materials to be free of contamination, and any aggregate materials determined by the ENGINEER to be contaminated shall not be used for the required construction activities.

E. Where required by the Contract Drawings, aggregate material commonly referred to as Dense Graded Aggregate, shall be non-plastic, broken or crushed stone, and shall conform to the following gradation requirements:

US Standard Sieve Size	Percent Passing By Weight
2 inch	100
¾ inch	52-100
3/8 inch	36-70
No. 4	24-50
No. 16	10-30
No. 200	0-10

F. Coarse aggregate, the cap thickness, and the rock construction entrance shall meet the requirements for AASHTO No. 1 aggregate, including the following gradation:

US Standard Sieve Size	Percent Passing By Weight
4inch	100
3-½ inch	90-100
2-½ inch	25-60
1-½ inch	0-15
¾ inch	0-5

2.02 TESTING

A. The CONTRACTOR shall, twenty-one (21) days prior to use of proposed materials, submit to the ENGINEER for review, certification that the materials proposed for use as aggregate materials meets the requirements of Article 2.01 herein. This certification shall include, but not necessarily be limited to testing provided by the material supplier including the following tests:

1.	Grain Size	ASTM C136
2.	L.A. Abrasion	ASTM C535
3.	Specific Gravity	ASTM C127

B. The CONTRACTOR shall be responsible for testing. Testing shall be performed by a specialized laboratory that has been favorably reviewed by the ENGINEER. The frequency of testing shall be once per every 5,000 cy of each material delivered or once per each material source, whichever is greater.

C. The CONTRACTOR shall submit to the ENGINEER certification of compliance along with a minimum of 100 pounds of each proposed material from each source that is proposed for use.

D. The CONTRACTOR shall not proceed with the use of the materials until the ENGINEER have favorably reviewed the proposed materials..

E. If in the opinion of the ENGINEER, the CONTRACTOR's proposed material is unsuitable for the proposed application, the CONTRACTOR shall submit the above certification for material of another type or from another source for consideration.

F. The ENGINEER may at any time request the collection of samples of imported materials for additional analytical and/or index property testing at the OWNER's expense. Any imported materials from off-Site sources found to not be in accordance with the Specifications, or found to be contaminated, shall immediately be removed and replaced with suitable materials at the CONTRACTOR's expense with no time extensions in the Construction Schedule granted.

PART 3 - EXECUTION

3.01 STORAGE

A. Stockpile satisfactory excavated and imported materials where directed by the ENGINEER until required for placement. Place, grade and shape stockpiles to provide proper drainage. Install appropriate erosion and sediment control devices around stockpiles.

B. Locate and retain stockpiled soil materials in a location where the weight of the stockpiled materials will not create surcharge loading conditions on the excavation edges.

3.02 PLACEMENT

A. Coarse aggregate shall be placed in uniform layers to the lines, depths, and grades in areas as shown on the Contract Drawings or as directed in the field by the ENGINEER.

B. Placement of coarse aggregate shall be performed by the CONTRACTOR in a manner such that the material is kept clean and free of foreign materials.

C. Placement of coarse DGA for access roads by the CONTRACTOR in a manner such that the material is graded to blend in with existing grades to prevent surface water ponding or erosion. In particular, the coarse aggregate for the access roads and benches shall be confined on the edges to prevent push-out of the material.

*****END OF SECTION*****

SECTION 02271

STONE RIPRAP

PART 1 - GENERAL

1.01 DESCRIPTION OF WORK

A. The CONTRACTOR shall provide all labor, materials, equipment, tools and appurtenances required to complete the work of furnishing and placing stone riprap, as shown on the Contract Drawings or as required and satisfactory to the ENGINEER.

B. The CONTRACTOR shall provide a "Competent Person" to implement, supervise and inspect the Work.

C. Stone riprap is proposed for placement in several channels and at the proposed culverts as part of the surface water management system repairs.

1.02 SUBMITTALS

A. The CONTRACTOR shall submit test reports for specific gravity to the ENGINEER at least 3 weeks prior to delivery of material to the Site. A minimum of one stone riprap sample of each required size shall be tested and results submitted to the ENGINEER from each source of supply. The tests will be performed by a testing laboratory employed by the CONTRACTOR.

B. The CONTRACTOR shall coordinate visits to the borrow source, if requested, by the ENGINEER.

1.03 RELATED SECTIONS

A. Temporary and Permanent Erosion and Sedimentation Control – Section 02125

PART 2 - PRODUCTS

2.01 MATERIAL

A. Stone riprap shall be environmentally clean, hard, durable, subangular material. It shall be free from any considerable amount of flat, laminated or elongated particles; and shall be free from cracks, shells, clay, organic matter, or other deleterious matter.

B. The stone riprap shall have a minimum Specific Gravity of 2.50, as defined by ASTM C127.

C. The stone riprap shall be composed of an evenly distributed mixture of particle sizes. Fifty (50) percent of the mixture by weight shall be larger than the d_{50} size shown on the Contract Drawings. The largest stone size in this mixture shall be 2.0 times the d_{50} size. The diameter of the smallest stone size in this mixture shall be 0.5 times the d_{50} size.

D. The breadth or thickness of each stone shall not be less than 1/3 its length.

2.02 TESTING

A. The CONTRACTOR shall not proceed with the use of the material until the ENGINEER has favorably reviewed the proposed materials.

B. If in the opinion of the ENGINEER, the CONTRACTOR's proposed material is unsuitable for the proposed application, the CONTRACTOR shall submit the above certification for material of another type or from another source for consideration.

C. The ENGINEER may at any time request the collection of samples of imported materials for additional analytical and/or index property testing at the OWNER's expense. Any imported materials from off-Site sources found to not be in accordance with the Specifications, or found to be contaminated, shall immediately be removed and replaced with suitable materials at the CONTRACTOR's expense with no time extensions in the Construction Schedule granted.

D. A minimum of one stone riprap sample of each required size, each weighing 100 pounds shall be tested from each source of supply at CONTRACTOR's expense. The tests will be performed by an approved testing laboratory. Test results shall be submitted to the ENGINEER in accordance with Subsection 1.02.

PART 3 – EXECUTION

3.01 INSTALLATION

A. All vegetation shall be mechanically cleared from the ground surface so as to minimize regrowth of vegetation through the stone riprap.

B. Stone riprap shall be placed to the thicknesses and grades indicated on the Contract Drawings or as required by the ENGINEER.

C. Placement of stone riprap shall be performed by the CONTRACTOR in a manner such that the material is graded to blend in with existing or proposed surrounding grades and to prevent surface water ponding or erosion.

D. Stone riprap shall be placed in a manner that will not damage utilities or other facilities. Stone riprap shall not be dropped from a height exceeding three feet.

E. The tolerance in stone riprap thickness in place shall be 0.0 feet to plus 0.3 feet.

F. Place without damage to underlying geotextile where and if applicable.

G. No material shall be place unless approved by the ENGINEER.

*****END OF SECTION*****

SECTION 02402

LIQUIDS HANDLING AND DISPOSAL

PART 1 - GENERAL

1.01 DESCRIPTION OF WORK

A. This Section describes requirements and restrictions for handling and disposal of liquids generated during construction activities including, but not limited to, dewatering of excavations and decontamination of equipment. The CONTRACTOR shall furnish all materials, equipment, transportation, services, and labor necessary to complete the Work.

C. All aqueous wastes removed from open excavations where liquid is in direct contact with non-aqueous phase product and/or residual sludges during the work shall be transferred to a lined (80-mil HDPE or equivalent) watertight container for temporary storage on-site. The liquids and solids shall be properly characterized, transported, and disposed of by the CONTRACTOR as directed by the ENGINEER.

D. The CONTRACTOR is responsible for the safe and proper collection, handling, containment/containerization, transportation and disposal of any and all other wastes generated by their work, including but not limited to used personal protection equipment, discarded equipment and supplies, and all general refuse.

E. The CONTRACTOR will abide by all pertinent PADEP, USEPA, OSHA, and other applicable regulations and guidelines, and the directions of the ENGINEER when performing all work applicable to this Section.

1.02 SUBMITTALS

A. The CONTRACTOR shall submit a Liquids Handling and Disposal Plan to the ENGINEER for approval within ten (10) days after the Notice to Proceed, and prior to mobilization onto the Site. The Plan shall include a description of methods for containing, collecting, and disposing of liquids generated during construction, including dewatering fluids and decontamination water. Work shall not proceed until this submittal has been favorably reviewed by ENGINEER.

1.03 RELATED SECTIONS

A. Construction Dewatering – Section 02140

B. Decontamination – Section 02431

PART 2 - PRODUCTS

Not Used.

PART 3 - EXECUTION

3.01 ON-SITE HANDLING

A. The handling of liquids shall be done in a manner such that the liquids containing non-aqueous phase product will be contained on the Site and not be allowed to flow onto the ground or off the Site as surface water discharge. Any direct or indirect discharge of collected non-aqueous phase product, residual sludges, or other visibly contaminated liquids to adjacent surface waters, groundwater, or ground surface is not permitted. CONTRACTOR shall immediately remedy, clean-up, and correct any conditions as a result of its pollution of lands and surface waters.

B. CONTRACTOR shall furnish secure and watertight temporary storage, as required to complete the work and as approved by the ENGINEER, for the entire duration of liquids handling. The storage shall be accessible by tanker trucks for off-site transportation and disposal.

D. CONTRACTOR shall maintain all ground and surface water control measures as necessary and as directed by the ENGINEER.

3.02 MANAGEMENT OF NON-AQUEOUS LIQUIDS

A. Containerized non-aqueous or oily liquids or solvents shall be stored at a designated area of the Site satisfactory to the ENGINEER and provided with secondary containment by CONTRACTOR. Disposal of non-aqueous or oily liquids or solvents shall be arranged and paid for by the CONTRACTOR.

3.04 MANAGEMENT OF SOLIDS

A. Solids remaining in tanks or containers following decanting of dewatering fluids shall be properly containerized and all free liquids removed or absorbed into solids, or as directed by ENGINEER.

C. CONTRACTOR shall transport and dispose of solids as described in Section 02221 or as directed by the ENGINEER.

****END OF SECTION****

SECTION 02431

DECONTAMINATION

PART 1 - GENERAL

1.01 PURPOSE

A. The purpose of this Section is to establish minimum decontamination requirements for the CONTRACTOR.

1.02 APPLICABILITY

A. These requirements shall be used by the CONTRACTOR to assist in preparation of the CONTRACTOR's Decontamination Plan to be part of the Health and Safety Plan. The CONTRACTOR's Decontamination Plan shall include procedures and plans for the decontamination of equipment and disposal of contaminated materials.

1.03 MINIMUM REQUIREMENTS

A. The CONTRACTOR shall prepare a project-specific Decontamination Plan which shall incorporate the requirements contained herein and shall describe all decontamination work.

B. The decontamination operations shall be performed at a decontamination pad to be constructed by the CONTRACTOR at a location to be determined by the CONTRACTOR. The decontamination pad shall meet the requirements for the collection of liquids described in Section 02402, "Liquids Handling and Disposal".

C. Potable water shall be used for decontamination. CONTRACTOR shall provide the ENGINEER the name and location of the water source and endorse that it is potable.

D. The CONTRACTOR shall provide a decontamination certificate for all equipment coming to and leaving the Site.

PART 2 - PRODUCTS

Not Used.

PART 3 - EXECUTION

3.01 STEAM/PRESSURE WASHING

A. The CONTRACTOR shall use steam or high pressure water to thoroughly wash all construction equipment upon arrival on-site, prior to departure from Site, and

following completion of the excavation of contaminated material (before the handling of clean fill). All visible materials, soils, sediments, etc., shall be removed from equipment and collected using brushes, brooms, or other devices prior to leaving the Work area. Construction equipment and miscellaneous items, including debris for off-Site disposal shall be thoroughly washed with additional brushing or washing as needed to remove all visible residues.

3.02 HANDLING OF WASH WATER

A. Wash water shall be collected and contained at the decontamination pad for disposal in accordance with Section 02402, "Liquids Handling and Disposal".

3.03 HANDLING OF SOLIDS

A. Solids generated from pressure washing shall be collected and containerized on-site in accordance with Section 02221, "Soil Excavation and Disposal".

*****END OF SECTION*****

SECTION 02433

SOIL VAPOR EXTRACTION WELL CONSTRUCTION

PART 1 – GENERAL

1.01 DESCRIPTION OF WORK

A. All casing and screen installation and drilling for soil vapor extraction (SVE) wells shall be observed by the ENGINEER and installed to the satisfaction of the ENGINEER. The SVE well data table presented Table 2-3 of the Design Report is approximate. The final completion of SVE wells will be based on the ENGINEER's directive. Work under this specification will include construction of SVE wells consisting of augured or drilled wells, piping and all appurtenances, sand packs, and well screens.

1.02 GENERAL

A. The approximate SVE well locations are shown on the Contract Drawings. Exact locations will be field surveyed to the coordinates in Table 2-3 of the Design Report by CONTRACTOR and field verified by ENGINEER before any work takes place. These specifications are intended to provide a general description of the requirements for SVE well installation, but does not cover all variations that may occur during well and trench construction. The specifications are intended to cover the successful completion of the system installation whether every detail is specifically mentioned or not.

B. Dimensions, details, and material specifications of the SVE wells are shown on the Contract Drawings and specified in this section.

1.03 QUALIFICATIONS

A. CONTRACTOR responsible for constructing the wells shall be properly licensed employing only competent workmen for the execution of this work, and all such work shall be performed under the direct supervision of an experienced well driller who is satisfactory to ENGINEER.

Bidder shall submit with Bid from driller a Statement of Qualifications which will include resumes of drilling crews and superintendent, include safety records (OSHA 200 logs and Experience Modification Ratings for the last three years) and insurance ratings for Well Driller.

B. OWNER may make any other investigations deemed necessary to determine the ability of CONTRACTOR to perform the work, and the CONTRACTOR shall furnish to OWNER all such information and data for this purpose as OWNER may request.

C. CONTRACTOR shall furnish satisfactory evidence upon request that all materials to be furnished in performing the specified work are new and all equipment to be used is in good working order.

D. Well driller shall be experienced in the installation of SVE wells.

1.04 SUBMITTALS

A. Submit under provisions of Section 01300.

B. Complete list of all equipment. Submit shop drawings including construction scheduling and coordination of the wellhead completion.

C. During drilling of each well, a daily detailed driller's report shall be maintained and submitted as requested by ENGINEER. The report shall give a complete description of all formations encountered, number of feet drilled, number of hours on the job, shutdown due to breakdown, feet of casing set, and other pertinent data requested by ENGINEER.

D. Upon completion of each well, CONTRACTOR shall also submit to ENGINEER a report to include the following:

1. Total depth of the completed well.
2. Depth or location of any lost drilling fluid, drilling materials, or tools.
3. Depth and thickness of soil types and all drilling actions effected by soil types.
4. Nominal hole diameter of the well bore and total depth.
5. Volume and amount of materials (including number of bags) used to fill the annular space.
6. Depth and description of the well casing.
7. Complete description (including length, diameter, slot sizes, etc.) of any well screens.
8. Protective well casing, plug, cap size and material used.
9. Concrete mix used, if appropriate.
10. Bentonite seal used and depths.
11. Name of individual who prepared report and members of the drilling crew.
12. Site map showing surveyed location of each well.
13. Other pertinent data requested by ENGINEER.

E. Following completion of drilling each well, the CONTRACTOR shall submit to the ENGINEER copies of driller's log book including the following information:

1. Reference point (e.g., top of casing) for all depth measurements;
2. Depth at which each change of formation (soil strata) occurs;
3. Identification of the material of which each stratum is composed;
4. Name of individual who prepared log and members of drilling crew;
5. Liquid levels encountered during drilling;
6. Drill rig type, make, and torque capacity; and,
7. Other pertinent data requested by the OWNER and ENGINEER.

F. Well Driller is responsible for obtaining all permit equivalencies required for installation of the wells.

G. The CONTRACTOR shall submit coordinates and elevations of the SVE wells in accordance with Section 01050 of the Technical Specifications.

H. Upon completion of the survey locating all the SVE wells, CONTRACTOR shall have the well driller conduct a Site walk of the proposed well locations to determine if problems may exist with the installation of wells in the proposed locations. Upon completion of Site walk by the well driller, the well driller shall submit to ENGINEER a letter that details any problems that may be foreseen with the proposed locations of the SVE wells.

1.05 QUALITY ASSURANCE

A. Perform work in accordance with Section 01400.

B. Perform work in accordance with applicable State and Federal regulations

1.06 NOTIFICATION

A. CONTRACTOR shall supply to the ENGINEER in writing the following:

1. The anticipated starting date of the well drilling and well construction.
2. The anticipated completion date of the well construction.
3. A detailed schedule indicating the order of well drilling, number and type of drill rigs to be used and utilized during well drilling and installation. Schedule shall clearly indicate whether multiple drill rigs are to be used.

B. CONTRACTOR shall notify ENGINEER, in writing, 5 days prior to the commencement of drilling activities.

C. No work shall be performed by CONTRACTOR without completing the notification requirements specified above.

D. At least five days prior to commencement of drilling activities, CONTRACTOR's REPRESENTATIVE shall visit the site and determine access to each of the well locations. If access required, CONTRACTOR shall notify and get approval to build an access area from the OWNER 5 days prior to the construction of the access area.

E. CONTRACTOR shall notify ENGINEER of any anticipated temporary shut downs.

1.07 HANDLING OF MATERIALS

A. All parts and materials shall be properly protected so that no damage, deterioration, or contamination will occur from time of shipment until the Work described in this Section is complete.

B. If in the opinion of the ENGINEER, parts and materials are damaged, deteriorated, or contaminated, the materials will be rejected. CONTRACTOR shall replace the parts and materials at the CONTRACTOR's expense.

1.08 PROJECT/SITE CONDITIONS

A. Proposed SVE well locations may be located under overhead electric lines. CONTRACTOR shall be responsible for contacting electric company and determining appropriate safety measures. CONTRACTOR shall be responsible for the modifications to be made to make the drilling safe. Modifications may include deenergizing the electricity or relocating the electric lines or temporarily tie-off the electric lines. CONTRACTOR shall be responsible for all costs associated with the modifications to the electrical lines for drilling. If safe and economical solution is not available, ENGINEER shall be responsible for the decision to relocate the proposed wells.

B. Review with and obtain approval from ENGINEER for location of temporary excavation for construction purposes, as well as location of temporary storage of equipment and materials.

C. Perform site grading, filling, and surface stabilization if necessary to access site with drilling equipment.

PART 2 – PRODUCTS

2.01 MATERIALS

A. Well Casing Pipe:

Provide pipe diameters in accordance with attached schedule:

1. PVC pipe shall be:

a) 4-inch diameter Schedule 80 PVC conforming to ASTM D1785
b) Flush threaded joints w/Teflon "O" rings.

B. Well Screen

1. Manufacturers:

a) Howard Smith Screen Company.
b) Johnson Screen Company.
c) Or equal.

2. Type:

a) All SVE wells: Schedule 80 PVC, pipe size, having minimum inside diameter of 2 inches.

3. Screen slot size:

a) Screen slot size: 0.020 inches for all SVE wells.

4. Close bottom with flush-thread end cap of same material as screen.

C. Filter Pack

1. Manufacturers:

a) Morie Company, Inc.
b) Or equal.

2. Clean, washed, acid-resistant, well rounded, graded flint/quartz type grains. Free of foreign material.
3. Size determined as follows:

a) All SVE wells: #2 or equivalent, to be verified by ENGINEER.

D. Bentonite Seal: Bentonite chips

E. Cement/Bentonite grout: Shall be Volclay Grout or PureGold Grout, both manufactured by American Colloid Company, or Benseal as manufactured by Baroid Drilling Fluids or favorably reviewed alternate.

2.02 MIXES

A. Follow manufacturer's instructions.

2.03 WATER SOURCE:

A. Water used in the well construction process (e.g. to prepare grout mixtures, decontamination, etc.) should be obtained from a clean, potable source of known chemistry that is free from potential site contaminants, as directed by ENGINEER, and handled in such a way (e.g. clean/decontaminated tanks, hoses, etc.) so as to not compromise the water's chemical integrity.

2.04 WELL IDENTIFICATION MARKER

A. Material: PVC, Fiberglass, or PE

B. Size 1½-inch flat or 2-inch circular

C. Color: White

D. Lettering:

1. Black
2. ¾-inch high minimum.

PART 3 – EXECUTION

3.01 EXAMINATION

A. Inspect materials upon delivery and before placement to document that they are manufacturer or supplier packaged and free of any material that may alter the chemical quality of the well.

3.02 PREPARATION

A. Protect structures near the well from damage.

B. Prior to each borehole, steam clean or high pressure hot water wash the well screen, bottom plug, riser, and all drilling equipment that will be in contact with the formation or utilized during well construction. Water generated during steam cleaning will be disposed in accordance with Section 02402.

3.03 DRILLING

A. All drill cuttings and drilling fluid shall be containerized and staged in separate stock piles in accordance with Section 02221 or in roll-offs for disposal at an on-site location approved by the OWNER. The soils in the rolloffs shall be covered with secured liners to protect the soils from inclement weather (i.e., wind, additional moisture from rainfall events, etc.).

B. Drill a stable borehole to the required depth using hollow stem auger, air rotary or equivalent pre-approved drilling method, as follows:

Drilling in overburden:

1. Drill borehole to depth specified in Table 2-3 of the Design Report or as directed by the ENGINEER, sized as follows:

a) All SVE well boreholes: 10-inch

C. Prior to attempting to install the well, the borehole must be stable (i.e., the borehole does not tend to cave, blow-in or both, is not obstructed, and is aligned plumb).

D. CONTRACTOR shall report to the ENGINEER any problems with the borehole such as cave-ins or obstructions from excessive silt.

E. Measure and record the depth of the borehole.

F. SVE well construction depths are included in Table 2-3 of the Design Report.

3.04 WELL CONSTRUCTION

A. General assembly of the Well Screen and Riser.

1. Inspect screen and casing pipe prior to placement and use only clean water to clean well materials.

2. Assure (equipment and personnel) that grease, oil, or other contaminants do not contact the well construction materials.
3. Personnel shall wear clean gloves while handling the well assembly.
4. All screens and SVE well risers shall be 4-inch diameter as shown on the Contract Drawings, solid or perforated Schedule 80 PVC pipe. All solid pipe (well pipe above ground, header pipe, and lateral pipe) shall be as indicated on the Contract Drawings.
5. Extend casing above grade and cap temporarily to restrict entrance of foreign materials during completion operations.

B. Installation of the Filter Packs.

1. Volume of Filter Pack - calculate the volume of filter pack required to fill the annular space between the well screen and the wall of the borehole prior to placement and measure and record the volume used during installation.
2. Length of Filter Pack - the filter pack shall extend around the perforated pipe as specified on the Contract Drawings, or as directed by the ENGINEER.
3. Placement of Filter Pack - Place the filter pack using a decontaminated flush threaded tremie pipe and clean water source or gravity feed directly between well casing and borehole wall or drill casing. Take precautions so as to not bridge the sand.

    a. Measure the progression of filter pack placement using a clean weighted measuring tape or clean calibrated tremie pipe or tamper.
    b. Maintain the stability of the borehole (i.e., the borehole does not tend to cave, blow-in, or is obstructed) during placement.
    c. Measure and record the volume and depth of the sand pack placed.
    d. Collect and retain a sample of the sand pack material.

4. Placement of Bentonite Seal – Place a layer of bentonite chips on top of and below the filter pack using the same methods as those described for placement of the filter pack to a thickness as specified on the Contract Drawings, or as directed by the ENGINEER. Hydrate the bentonite chips with clean water after placement.

C. Installation of Cement/Bentonite grout

1. Bentonite slurry shall be tremied. Tremie pipe shall be side-discharged and lowered to the bottom of the boring.
2. A Cement/Bentonite grout mix shall set for at least 24 hours after sealing to assure complete set-up prior to well-head assembly, etc.

3.05 WELL PROTECTION

A. During progress of work, protect well from tampering or entrance of foreign material.

***** END OF SECTION *****

SECTION 02595

GEOTEXTILE

PART 1 - GENERAL

1.01 DESCRIPTION OF WORK

A. All areas to receive riprap, coarse aggregate and surface moisture repairs shall be underlain by geotextile.

B. The CONTRACTOR shall furnish all labor, materials, equipment, tools and appurtenances required to complete the work of furnishing, and placing geotextile, complete with appurtenances, as shown, specified or required. CONTRACTOR shall provide a "Competent Person" to implement, supervise, and inspect all work.

1.02 SUBMITTALS

A. The CONTRACTOR shall furnish a mill certificate from the company manufacturing the geotextile attesting that the geotextile meets the physical and manufacturing requirements specified. Geotextile shall be rejected by the ENGINEER and replaced by the CONTRACTOR if it is found to have defects, rips, holes, flaws, deterioration or other damage.

B. The CONTRACTOR shall submit shop drawings to the ENGINEER showing proposed construction methods; and tie-in details between geosynthetics, drainage structures, fill materials, and the like.

1.03 RELATED SECTIONS

A. Coarse Aggregate – Section 02233

B. Stone Riprap – Section 02271

C. Access and Haul Roads - Section 02655

1.04 PRODUCT HANDLING

A. The CONTRACTOR shall protect the work described in this Section before, during, and after installation, and shall protect the installed work covered by other Sections.

B. The CONTRACTOR shall, during all periods of shipment and storage, protect the geotextile from direct sunlight, ultraviolet light, and temperatures greater than 120 degrees F, mud, dirt, dust, debris and other deleterious sources. Geotextile shall be maintained, wrapped in a heavy-duty protective covering until it is installed.

C. If the ENGINEER determines material is damaged or has excessive sunlight exposure, the CONTRACTOR shall immediately make all repairs and replacements, at no additional cost to the CSDG.

1.05 CONFORMANCE TESTING OF GEOTEXTILE

A. Geotextiles will be tested prior to shipment to ensure that the properties of the finished product are in accordance with the construction specifications. The required material properties, test methods, values, and units are presented in Article 2.01. Samples of geotextiles will be tested by the manufacturer at a frequency of one sample (at least 4 ft by 4 ft) for every 100,000-ft² of material produced. Geotextile samples will be tested for the properties and to the requirements given in Article 2.01.

B. One 20-ft² sample of each manufacturer's geotextile roll sampled will be retained by the manufacturer or CONTRACTOR until construction, for which the geotextile is used, is complete. Each sample of geotextile will have the machine direction, roll number, lot number, date of manufacturer, and manufacturer name clearly marked on or attached to the sample.

C. Upon delivery of the geotextile to the Site, the ENGINEER shall obtain representative samples of the furnished product for conformance testing, the required material properties, test methods, values, and units are presented in Article 2.01. Samples of the geotextile will be tested by an independent testing laboratory at a frequency of one sample per lot, but a minimum of one sample per 200,000 square feet of material delivered.

PART 2 - MATERIALS

2.01 NONWOVEN GEOTEXTILE

A. Sixteen ounce per square yard geotextile shall be needle-punched nonwoven polypropylene or polyester fabric.

Property	Typical Requirements	Test Method
Mass/Area	16 oz/sy	ASTM D3776
Tensile Strength	160 lb/in	ASTM D4595 or
	380 lbs	ASTM D4632
Elongation	50%	ASTM D4595 or
	50%	ASTM D4632
Burst Strength	700 psi	ASTM D3786
Puncture Strength	165 lbs	ASTM D4833

2.02 WOVEN GEOTEXTILES

A. Woven geotextile shall meet the following MARV properties:

Property	Requirements	Test Method
Tensile Strength	125 lb/in	ASTM D4595 or
	250 lb	ASTM D4632
Elongation	12%	ASTM D4595 or
	12%	ASTM D4632
Burst Strength	500 psi	ASTM D3786
Puncture Strength	115 lbs	ASTM D4833

2.03 WIDTH OF FABRIC

A. To keep the number of seams to a minimum, the geotextile shall be provided in sections not less than 12 feet wide.

PART 3 - EXECUTION

3.01 SITE PREPARATION

A. The surface to receive geotextile shall be cleared of sharp objects, boulders, stumps, or any materials that may contribute to fabric punctures, shearing, rupturing or tearing to the satisfaction of the ENGINEER.

B. The base surface or surface of embankments shall be graded as smooth as possible and compacted. The subgrade shall be inspected for unstable areas or soft spots, before the geotextile is placed and additional fill shall be placed and compacted to eliminate those unstable areas.

3.02 INSTALLATION

A. The geotextile shall be placed in the manner and at the locations shown on the Contract Drawings. Geotextile shall be laid smooth and free of tension, stress, folds, wrinkles, or creases.

B. All geotextiles seams shall be continuously sewn. Spot sewing or thermal bonding are allowed, with approval by the ENGINEER. Geotextile will be overlapped a minimum of 6 inches prior to seaming.

C. No vehicles shall be permitted on the geotextile.

D. If geotextile is damaged during any step of installation, a piece of geotextile material shall be cut and placed over the damaged area and overlap the undamaged material a minimum of 3 feet in each direction.

E. The geotextile shall be placed on side slopes as shown on the Contract Drawings. If necessary, the geotextile shall be positioned by hand after being unrolled to

minimize wrinkles. The geotextile shall not be placed in the horizontal direction (i.e., across the slope) on slopes steeper than 10 (horizontal): 1 (vertical), except as part of a patch.

3.03 PROTECTION

A. After installation, the geotextile should be visually inspected to assure that no objects are present that could potentially harm the geotextile.

B. Any geotextile damaged during its installation or during placement of overlying materials, as deemed by the ENGINEER, shall be replaced by the CONTRACTOR at no additional cost to the CSDG.

C. The work shall be scheduled so that the covering of the geotextile with the material to be placed over it is accomplished within 30 days after placement of the geotextile. Failure to comply with this requirement shall require placement of an additional geotextile at no additional cost to the CSDG.

D. When spot-repairing non-woven geotextile with patches, a 6-inch sewn overlap will be used in areas with a slope inclination greater than ten percent, while a 3 foot leistered overlap may be used in areas with a slope inclination of ten percent or less. Woven geotextile cannot be repaired; it must be replaced, if damaged, at no cost to CSDG.

**** END OF SECTION ****

SECTION 02597

LINEAR LOW DENSITY POLYETHYLENE (LLDPE) GEOMEMBRANE

PART 1 GENERAL

1.01 DESCRIPTION OF WORK

A. The CONTRACTOR shall furnish all labor, materials, equipment, tools, and appurtenances required to complete the work of linear low density polyethylene (LLDPE) geomembrane installation or approved equivalent flexible polyethylene membrane (VfPE) , and other related and incidental work within the designated area and as required for the construction of other work, as shown, specified, or required. CONTRACTOR shall provide a "Competent Person" to implement and supervise all work. Reference to CONTRACTOR implies installer as appropriate in this Section.

B. Comply with applicable codes, ordinances, rules, regulations, and laws of local, municipal, State, or Federal authorities having jurisdiction.

1.02 RELATED SECTIONS

A. Backfill and Fill - Section 02223

B. Coarse Aggregate - Section 02233

C. Geocomposite – Section 02598

D. Cap Cover Soil and Cap Cushion Soil – Section 02224

E. Demolition – Section 02090

1.03 SUBMITTALS

A. Pre-installation: Submit the following prior to geomembrane deployment:

1. Origin (supplier's name and production plant) and identification (brand name and number) of resin used to manufacture geomembrane.
2. Copies of dated quality control certificates issued by resin supplier.
3. Results of tests conducted by geomembrane manufacturer to verify that resin used to manufacture geomembrane meets Specifications.
4. Statement that amount of reclaimed polymer added to resin during manufacturing did not exceed 2% by weight.
5. List of materials that comprise geomembrane, expressed in following categories as percent by weight:

    a. polyethylene;
    b. carbon black; and,
    c. other additives.

6. Manufacturer's specification for geomembrane, including properties listed and measured using appropriate test methods.
7. Written certification that minimum values given in manufacturer's specification are guaranteed by geomembrane manufacturer.
8. Quality control certificates, signed by geomembrane manufacturer. Each quality control certificate shall include applicable roll identification numbers, testing procedures, and results of quality control tests.
9. Field panel layout and identification code including dimensions and details.
10. Resumes of CONTRACTOR's Superintendent and Master Seamer, including dates and duration of employment.
11. Installation schedule.
12. List of personnel performing seaming operations, including experience information.
13. Certificate that extrusion rod or pellets to be used are comprised of same resin as geomembrane liner material.
14. Manufacturer Material and Installation warranties.

B. Installation: Submit as installation proceeds.

1. Quality control documentation recorded during installation.
2. Subgrade surface acceptance certificates signed by CONTRACTOR for each area that will be covered directly by geomembrane. Submit on deployment of geomembrane.
3. Deployment of geomembrane will be considered acceptance of subgrade, if certificate is not submitted.

C. Submit in accordance with Section 01300.

1.04 PRE-QUALIFICATIONS

A. Manufacturer

Manufacturer shall have minimum 5-years continuous experience in manufacture of LLDPE geomembrane, or experience totaling 10,000,000 square feet (sq. ft.) of manufactured LLDPE, or geomembrane manufacture for minimum of ten (10) completed facilities.

B. Fabricator

Fabricator shall have minimum 5-years continuous experience in fabrication of LLDPE geomembrane or experience totaling 2,000,000 sq. ft. of fabricated LLDPE geomembrane for minimum of ten (10) completed facilities.

C. CONTRACTOR

1. CONTRACTOR shall have minimum 5-years continuous experience in installation of LLDPE geomembrane or experience totaling 2,000,000 sq. ft. of installed LLDPE geomembrane for minimum of ten (10) completed facilities.

2. Personnel performing seaming operations shall be qualified by experience or training. Minimum of one seamer shall have experience seaming minimum 2,000,000 sq. ft. of LLDPE geomembrane using same type of seaming apparatus in use at Site. Most experienced seamer, "Master Seamer," shall provide direct supervision, as required, over less experienced seamers.

1.05 QUALITY ASSURANCE PROGRAM

A. Manufacturer, fabricator, and CONTRACTOR shall participate in and conform to items and requirements of quality assurance program as outlined in this Section and the Construction Quality Assurance (CQA) Plan.

1.06 DELIVERY, STORAGE, AND HANDLING

A. Packing and Shipping

1. Manufacturer shall identify each roll delivered to site with following:

a. Manufacturer's name.
b. Product Identification.
c. Thickness.
d. Roll number.
e. Roll dimensions.

2. Protect geomembrane from excessive heat, cold, puncture, cutting, or other damaging or deleterious conditions during loading, transport, and unloading at site.

B. Acceptance at Site

1. CONTRACTOR shall be responsible for unloading all geosynthetics delivered to the Site, unless otherwise agreed at the pre-construction meeting.
2. Shipper shall notify CONTRACTOR, or other party responsible for off-loading materials, 48-hours in advance of material delivery.
3. CONTRACTOR, or other party responsible for off-loading materials, shall bear all costs (including but not limited to OWNER's, ENGINEER's, 3rd party contractor costs) associated with failure to supply appropriate personnel and equipment required to off-load geosynthetic materials.
4. Perform physical inventory of materials delivered to the Site for use in the Work. Perform inventory on delivery, or as soon as practicable thereafter.
5. Conduct surface observations of each roll for defects and damage. This examination shall be conducted without unrolling rolls, unless defects or damages are found or suspected. Note type and extent of defects or damage observed.

6. Defective or damaged rolls, or portions of rolls, will be rejected and shall be removed from Site and replaced by the CONTRACTOR, at no additional expense to the OWNER.
7. Rolls or portions of rolls without proper identification or labeling will be rejected and shall be removed from Site.

C. Storage and Protection

1. OWNER will provide on-site storage area for geomembrane rolls from time of delivery until deployment.
2. CONTRACTOR shall protect geomembrane from dirt, water, and other sources of damage.
3. Preserve integrity and readability of geomembrane roll labels.

PART 2 PRODUCTS

2.01 MATERIALS

A. Textured Polyethylene Geomembrane Properties

Testing Properties	Testing Method	40 mil LLDPE Value
Thickness mils (min avg.) • Lowest individual for 8 out of 10 values • Lowest individual for any of the 10 values	ASTM D 5994	38 mils 36 mils 34 mils
Density g/ml	ASTM D1505 or ASTM D792	0.939 (max) (either method)
Asperity Height (min avg.) (1) (2)	GM-12	10 mils
Tensile Properties (min. avg.) (3) • Break strength – lb/in • Break elongation - %	ASTM D638 Type IV	 60 250
Tear Resistance – lb (min. avg.)	ASTM D1004	22
Puncture Resistance – lb (min. avg.)	ASTM D4833	44
Carbon Black Content - %	ASTM D1603 (4)	2.0 to 3.0
Carbon Black Dispersion	ASTM D 5596	Note (5)
UV Resistance (6) • Std. OIT (min. avg.), or • High Pressure OIT (min avg.) % retained after 1600 hrs	 ASTM D3895 ASTM D5885	 N.R. (7) 35

(1) Of 10 readings, 8 out of 10 must be ≥7 mils, and lowest individual reading must be ≥ 5 mils
(2) Alternate the measurement side for double sided textured sheet.
(3) Machine direction (MD) and cross machine direction (XMD) average values should be on the basis of 5 test specimens each direction.
- Break elongation is calculated using a gauge length of 2.0 in. at 2.0 in./min.

(4) Other methods such as D4218 (muffle furnace) or microwave methods are acceptable if an appropriate correlation to D1603 (tube furnace) can be established.
(5) Carbon black dispersion (only near spherical agglomerates) for 10 different views:
    - 9 in Categories 1 or 2 and 1 in Category 3
(6) The condition of the test should be 20 hr. UV cycle at 75°C followed by 4 hr. condensation at 60°C.
(7) Not recommended since high temperature of the Std-OIT test produces an unrealistic result for some of the antioxidants in the UV exposed samples.

B. Geomembrane shall be manufactured from new polyethylene resin, except as noted below:

1. Use of geomembrane recycled during manufacturing process shall be permitted, with written approval from OWNER, if recycled geomembrane does not exceed 2% by weight.
2. Geomembrane manufactured from non-complying resin shall be rejected.

C. Geomembrane Characteristics

1. Contain maximum of 1%, by weight, of additives, fillers or extenders (not including carbon black).
2. Contain between 2% and 3%, by weight, of carbon black for ultraviolet light resistance.
3. No pinholes, bubbles or other surface features that compromise geomembrane integrity are allowed. Geomembrane shall be free of blisters, nondispersed raw materials, or other signs of contamination resulting from the manufacturing process. Geomembrane rolls or portions of rolls with these defects shall be rejected.

2.02 SEAMING AND TESTING EQUIPMENT

A. Welding

1. Maintain on-site minimum of two (2) spare operable seaming machines, unless otherwise agreed upon at pre-construction meeting.
2. Seaming equipment shall not damage geomembrane.
3. Use extrusion welding apparatus equipped with gauges indicating temperature of extrudate at the equipment nozzle, or utilize hand-held gauges to measure extrudate temperatures.
4. Use self-propelled fusion-welding machines equipped with following:
    a. Gauge indicating temperature of heating element; and,
    b. Gauge indicating the speed of travel.
5. Place electric generator on smooth base such that no damage occurs to geomembrane.

B. Vacuum Testing Equipment

1. Vacuum box assembly shall consist of a rigid housing open at the bottom, with a transparent viewing window and soft neoprene gasket

attached to bottom rim of housing, a porthole or valve assembly, and a vacuum gauge;
2. Pump assembly equipped with pressure controller and pipe connections;
3. Pressure/vacuum rubber hose with fittings and connections;
4. Soapy solution to wet test area; and,
5. Means of applying soapy solution.

C. Air Pressure Testing Equipment

1. Air pump (manual or motor driven), equipped with pressure gauge, capable of generating, sustaining, and measuring pressure between 24 and 35 psi (160 and 240 kPa), and mounted on cushion to protect geomembrane;
2. Rubber hose with fittings and connections;
3. Means of safely sealing weld air channel;
4. Sharp hollow needle, or other approved pressure feed device; and,
5. Air pressure monitoring device.

D. Tensiometer

1. Tensiometer shall be capable of maintaining constant jaw separation rate of 2-inches per minute; and,
2. Tensiometer shall be calibrated annually. A certificate indicating that the equipment has been calibrated within one (1) year of use in the work shall be maintained with the tensiometer. The CONTRACTOR will provide the ENGINEER with a copy of the certificate of calibration prior to Work.

2.03 SOURCE QUALITY CONTROL

Tests and inspections shall be performed by geomembrane manufacturer as follows:

A. Test geomembranes to demonstrate that resin meets this Specification.

B. Continuously monitor geomembrane during manufacturing process for inclusions, bubbles, or other defects. Geomembranes, which exhibit defects, shall not be acceptable for installation.

C. Monitor thickness continuously during manufacturing process.

D. Tests shall be conducted for following properties in accordance with test methods specified. Samples not complying with Specifications shall result in rejection of rolls. At geomembrane manufacturer's discretion and expense, additional testing of individual rolls may be performed to identify and reject non-complying rolls and to approve individual rolls.

Testing Properties	Testing Method	Manufacturer QC Testing Frequency
Thickness mils (min avg.)	ASTM D 5994	1 per Roll;
Density g/ml	ASTM D1505 or ASTM D792	1 per 50,000 sf
Asperity Height (min avg.) (1) (2)	GM-12	1 per 50,000 sf
Tensile Properties (min. avg.) (3)	ASTM D638 Type IV	1 per 50,000 sf
Tear Resistance – lb (min. avg.)	ASTM D1004	1 per 50,000 sf
Puncture Resistance – lb (min. avg.)	ASTM D4833	1 per 50,000 sf
Carbon Black Content - %	ASTM D1603 (4)	1 per 50,000 sf
Carbon Black Dispersion	ASTM D 5596	1 per 50,000 sf
UV Resistance (5) • Std. OIT (min. avg.), or • High Pressure OIT (min avg.) % retained after 1600 hrs	ASTM D3895 ASTM D5885	(6)

(1) Of 10 readings, 8 out of 10 must be ≥7 mils, and lowest individual reading must be ≥ 5 mils
(2) Alternate the measurement side for double sided textured sheet.
(3) Machine direction (MD) and cross machine direction (XMD) average values should be on the basis of 5 test specimens each direction.
    - Break elongation is calculated using a gauge length of 2.0 in. at 2.0 in./min.
(4) Other methods such as D4218 (muffle furnace) or microwave methods are acceptable if an appropriate correlation to D1603 (tube furnace) can be established.
(5) The condition of the test should be 20 hr. UV cycle at 75°C followed by 4 hr. condensation at 60°C.
(6) Manufacturer may provide a certification letter

PART 3 – EXECUTION

3.01 QUALITY ASSURANCE SAMPLING AND TESTING

A. CONTRACTOR shall make rolls available and assist ENGINEER in obtaining material inventory and samples. Samples shall be tested in accordance with the test methods and frequencies specified in the following table:

Testing Properties	Testing Method	Conformance QA Testing Frequency
Thickness mils (min avg.)	ASTM D 5994	1 per 50,000 sf
Density g/ml	ASTM D1505 or ASTM D792	1 per 50,000 sf
Asperity Height (min avg.) (1) (2)	GM-12	1 per 50,000 sf

Testing Properties	Testing Method	Conformance QA Testing Frequency
Tensile Properties (min. avg.) (3)	ASTM D638 Type IV	1 per 50,000 sf
Tear Resistance – lb (min. avg.)	ASTM D1004	1 per 50,000 sf
Puncture Resistance – lb (min. avg.)	ASTM D4833	1 per 50,000 sf
Carbon Black Content - %	ASTM D1603 (4)	1 per 50,000 sf
Carbon Black Dispersion	ASTM D 5596	1 per 50,000 sf

(1) Of 10 readings, 8 out of 10 must be ≥7 mils, and lowest individual reading must be ≥ 5 mils
(2) Alternate the measurement side for double sided textured sheet.
(3) Machine direction (MD) and cross machine direction (XMD) average values should be on the basis of 5 test specimens each direction.
- Break elongation is calculated using a gauge length of 2.0 in. at 2.0 in./min.

(4) Other methods such as D4218 (muffle furnace) or microwave methods are acceptable if an appropriate correlation to D1603 (tube furnace) can be established.

B. Rolls represented by quality assurance testing shall be rejected if test failure occurs. CONTRACTOR may at their expense request additional testing to validate individual rolls. Rolls bracketed by passing tests may be used in the work.

3.02 SURFACE PREPARATION

A. CONTRACTOR is responsible for preparing subgrade surface for geomembrane placement.

B. After prepared subgrade surface has been accepted in accordance with Construction Quality Assurance Plan, report to OWNER any change in subgrade surface condition that may require repair work. Maintain prepared surface.

C. Do not place geomembrane onto an area that has become degraded due to weather conditions. Observe and report surface condition daily to evaluate suitability for geomembrane deployment.

D. Repair damage to prepared surface caused by installation activities at CONTRACTOR'S expense.

3.03 INSTALLATION

A. Panel Nomenclature

1. Field panel is defined as a roll or portion of roll cut and seamed in field, excluding patches and cap strips.
2. Identify each field panel with a unique identification code (number or letter-number). This identification code shall be agreed upon by OWNER, CONTRACTOR, and ENGINEER.

3. Marking on liner shall be as agreed upon in the Pre-Construction Meeting. Only authorized personnel shall be permitted to mark on liner.

B. Protection

1. Do not use equipment that damages geomembrane;
2. Ensure subgrade surface underlying geomembrane has not deteriorated since previous acceptance, and remains acceptable immediately prior to and during geomembrane deployment;
3. Keep geosynthetic elements immediately underlying geomembrane clean and free of debris;
4. Do not permit personnel to smoke or wear shoes that can damage geomembrane while working on geomembrane. Personnel shall not bring glass or metal containers on geomembrane, except as required to perform the work;
5. Unroll panels in manner that does not cause excessive scratches or crimps in geomembrane and does not damage supporting soil;
6. Place panels in manner that minimizes wrinkles (especially differential wrinkles between adjacent panels);
7. Prevent wind uplift by providing adequate temporary loading and/or anchoring (e.g., sandbags) that shall not damage geomembrane. In case of high winds, continuous loading is recommended along panel edges; and,
8. Protect geomembrane in areas where excessive traffic is expected, using geotextiles, extra geomembrane, or other suitable materials.

C. Field Panel Deployment

1. Install field panels at locations indicated on CONTRACTOR's layout plan to the greatest extent possible.
2. Replace seriously damaged (torn, twisted or crimped) field panels, or portions thereof, at no cost to OWNER. Repair less serious damage as specified herein. ENGINEER shall determine if material shall be repaired or replaced.
3. Remove from work area damaged panels, or portions of panels, that have been rejected by the ENGINEER.
4. Do not proceed with deployment at ambient temperature below 32° F (0° C) or above 104° F (40° C) unless authorized, in writing, by OWNER.
5. Do not deploy during precipitation, in presence of excessive moisture, (fog, dew), in areas of ponded water, or in presence of excessive winds.
6. Do not undertake deployment if weather conditions will preclude material seaming on same day as deployment.
7. Do not deploy more geomembrane field panels in one day than can be seamed during that day.

D. Seam Layout

1. To the greatest extent possible, orient seams parallel to line of maximum slope (i.e., oriented along, not across, slope).

2. No horizontal seams will be permitted on the slope, unless approved, in writing, by the OWNER.
3. No horizontal seam shall be less than 5 ft (1.5 m) from toe of slope, unless approved by the ENGINEER.
4. In general, maximize lengths of field panels and minimize number of field seams.
5. Align geomembrane panels to have nominal overlap of 3 in. (75 mm) for extrusion welding and 4 to 6 in. (100 mm to 150 mm) for fusion welding. Final overlap shall be sufficient to allow destructive "peel" tests to be performed on seam.

E. Temporary Bonding

1. Hot air device (Liester) may be used to temporarily bond geomembrane panels to be extrusion welded.
2. Do not damage geomembrane when temporarily bonding adjacent panels. Apply minimal amount of heat required to lightly tack geomembrane panels together. Control temperature of hot air at nozzle of any temporary welding apparatus to prevent damage to geomembrane.
3. Do not use solvent or adhesive.

F. Seaming Methods

1. Approved processes for field seaming are extrusion fillet welding and fusion welding. Proposed alternate processes shall be documented and submitted to OWNER for approval. Alternate procedures shall be used only after being approved in writing by OWNER.
2. Seams shall meet following requirements:

SEAM PROPERTIES FOR 40 MIL TEXTURED

PROPERTY	METHOD	40 MIL TEXTURED LLDPE SPECIFIED VALUE
Shear Strength	ASTM D4437	53 ppi (min)
Peel Adhesion:		
Fusion	ASTM D4437	44 ppi (min)
Extrusion	ASTM D4437	44 ppi (min)

Modifications to ASTM D4437: For shear tests, sheet shall yield before failure of seam. For peel adhesion, seam separation shall not extend more than 10 percent of seam width into seam. For either test, testing shall be discontinued when sample has visually yielded. For all tests, 4 of 5 samples shall pass for seam to qualify and all shall have a strength value.

3. Use fusion welding as primary method of seaming adjacent field panels.

   a. Cross seam "tees", associated with fusion or extrusion seam welding, shall be patched in accordance with the requirements of this Section.

b. Place welder on protective pad to prevent geomembrane damage when not in use.

c. When subgrade conditions dictate, use movable protective layer (e.g. geomembrane rub sheet) directly below each overlap of geomembrane that is to be seamed to prevent buildup of moisture between sheets and prevent debris from collecting around pressure rollers.

4. Use extrusion fillet welding as secondary method for seaming between adjacent panels and as primary method of welding for detail and repair work.

a. Purge heat-degraded extrudate from barrel of extruder

b. Place smooth insulating plate or fabric beneath hot welding apparatus when not in use

c. Use clean and dry welding rods or extrudate pellets.

d. Clean dirt and debris from geomembrane surface prior to extrusion welding.

e. Grind weld area to using suitable hand held equipment to prepare geomembrane surface for extrusion welding. Grind perpendicular to seam. Take care not to over-grind geomembrane

e. Minimize exposed grinding marks adjacent to extrusion weld. Do not allow exposed grinding marks to extend more than 1/4-inch outside finished seam area.

f. Complete extrusion welding within one (1) hour of seaming operation grinding process without damaging geomembrane

G. Seaming Procedures

1. General Seaming Procedures - Ambient temperature between 32° F (0° C) and 104° F (40° C).

a. Do not field seam without Master Seamer being present.

b. Seam only during dry conditions, i.e., no precipitation nor other excessive moisture, such as fog or dew.

c. Do not seam during excessive winds, except as needed to protect the work. Do not seam if wind creates unsafe working conditions.

d. If required, use "rub-sheet" or similar hard surface directly under seam overlap to achieve proper support for seaming apparatus.

e. Align panels to minimize wrinkles and/or "fishmouths" in welds.

f. Extend seams to outside edge of panels placed in anchor trench.

g. Prior to seaming, ensure that seam area is free of moisture, dust, dirt, debris, or foreign material.

h. "Fishmouths" or wrinkles at seam overlaps shall be cut along ridge of wrinkle in order to achieve flat overlap. Cut "fishmouths" or wrinkles shall be seamed or patched in accordance with this Section.

2. Cold Weather Seaming Procedures (ambient temperature is below 32° F (0° C)).

   a. No seaming of geomembrane is permitted unless demonstrated to ENGINEER that geomembrane seam quality will not be compromised. The CONTRACTOR and ENGINEER shall determine geomembrane surface temperatures at intervals of at least once per 100 linear feet of seam, to determine if preheating is required. For extrusion welding, preheating required if surface temperature of geomembrane falls below 32° F (0 C).

   b. Preheating may be waived by OWNER, based on recommendation from ENGINEER, if demonstrated to ENGINEER'S satisfaction that welds of equivalent quality may be obtained without preheating at expected temperature of installation.

   c. If preheating is required, ENGINEER shall observe areas of geomembrane that have been preheated by hot air device prior to seaming, to ensure they have not been subjected to excessive melting.

   d. ENGINEER shall confirm that surface temperatures not lowered below minimum surface temperatures specified for welding due to winds or other adverse conditions. It may be necessary to provide wind protection for seam area.

   e. Preheating devices used shall be pre-approved by OWNER prior to use.

   f. Additional destructive seam tests shall be taken at interval between 500 ft and 250 ft of seam length, at ENGINEER'S discretion.

   g. Sheet grinding may be performed before preheating, if applicable.

   h. Trial seaming shall be conducted under same ambient temperature and preheating conditions as actual seams. New trial seams shall be conducted if ambient temperature drops by more than 10° F (3° C) from initial trial seam test conditions. New trial seams shall be conducted upon completion of seams in progress during temperature drop.

3. Warm Weather Procedures (ambient temperature is above 104° F (40° C)).

   a. No seaming of geomembrane is permitted unless demonstrated to ENGINEER that geomembrane seam quality will not be compromised.

   b. Trial seaming shall be conducted under same ambient temperature conditions as actual seams. New trial seams shall be conducted if ambient temperature rises by more than 5° F (3° C) from initial trial seam test conditions. Such new trial seams shall be conducted upon completion of seams in progress during temperature rise.

c. At option of ENGINEER, additional destructive seam tests may be required for any suspect areas.

H. Repair Procedures:

1. Repair portions of geomembrane exhibiting flaw, or failing destructive or nondestructive test.
2. Final decision as to repair procedure shall be agreed upon between OWNER, CONTRACTOR, and ENGINEER.
3. Acceptable repair procedures include following:

   a. Patching: Piece of same geomembrane material extrusion welded into place. Use to repair large holes, tears, nondispersed raw materials, and contamination by foreign matter. All panel intersections shall be patched.
   b. Capping: Strip of same geomembrane material extrusion welded into place over inadequate seam. Use to repair large lengths of failed seams.
   c. Spot welding or seaming (Grind and Weld): Bead of molten extrudate placed on flaw. Use to repair scuffing, dimpling, or other minor, localized flaws. Spot welding shall not be used to repair holes in the geomembrane liner.
   d. Removal and replacement: Remove bad seam and replace with strip of same geomembrane material welded into place. Use to repair large lengths of failed seams.
   e. Extrusion welding flap: Repairs of this type shall not be used unless approved by ENGINEER, and shall not exceed 100 ft (30 m) in length.

4. For each repair method:

   a. Ensure surfaces are clean, dry, and prepared in accordance with specified seaming process.
   b. Ensure seaming equipment used in repairing procedures meet requirements of this Specification.
   c. Extend patches or caps at least 6 inches (150 mm) beyond edge of defect. Round corners of patches with radius of approximately 6 inches (150 mm).

5. Do not place overlying layers over repair locations, until appropriate acceptable nondestructive and laboratory destructive test results are obtained.
6. "Topping" of extrusion welds shall not be permitted.

3.04 FIELD QUALITY ASSURANCE AND QUALITY CONTROL

A. Visual Inspection:

1. ENGINEER will examine seam and non-seam areas of geomembrane to identify defects, holes, blisters, nondispersed raw materials, and any sign of contamination by foreign matter.
2. Clean and wash geomembrane surface, if ENGINEER determines that amount of dust or mud inhibits examination.
3. Do not seam any geomembrane panels that have not been examined for flaws by ENGINEER.
4. Repair and non-destructively test seams and panel areas identified by ENGINEER.

B. Trial Seams:

1. Make trial seams on fragment pieces of geomembrane liner to verify that conditions are adequate for production seaming.
2. Make trial seams for each combination of materials to be welded (i.e., textured/smooth, smooth/smooth, textured/textured). Seamers may only weld those combinations for which they have produced acceptable trial welds. Seamers are not required to produce trial seams for material combinations they will not be welding.
3. Make trial seams at beginning of each seaming period, following restart of welding equipment, upon change of seamers, and at least once every five (5) hours, for each production seaming apparatus used that day.
4. Make trial seams using the same materials and under the under same conditions as production welding.
5. The ENGINEER shall observe trial seam preparation and testing.
6. Make trial seam sample shall be at least 5-feet (1.6 m) long by 1-foot (0.3 m) wide (after seaming) with seam centered lengthwise.
7. Cut six (6) test specimens from sample, using 1-inch (25 mm) wide die cutter. These specimen locations shall be selected randomly along trial seam sample by ENGINEER. Test three (3) specimens in peel and three (3) specimens in shear, using calibrated field tensiometer. Samples shall fail in sheet or exceed the specified peel and shear criteria stated in this Specification.
8. If specimen fails, the CONTRACTOR will attempt to identify the cause of the failure (e.g., mechanical malfunction, dirt in weld). On correction of the deficiency the seamer shall produce a second trial seam. If the second trial seam fails, the seamer shall not be permitted to weld production seams until deficiencies are corrected and two (2) consecutive successful trial welds are achieved. If mechanical failure is determined to be the cause of the second trial seam failure, the machine shall be removed from service until suitable repairs are made. The seamer shall be required to produce only one passing trial seam with the replacement machine.
9. Cut remainder of successful trial seam into three (3) pieces; one (1) to be retained in OWNER'S archives, one (1) to be retained by CONTRACTOR, and one (1) to be retained by ENGINEER for possible

laboratory destructive seam testing. If required by OWNER, remaining portion of trial seam sample may be subjected to destructive testing. On completion of the work, the trial seam archives shall be disposed of as directed by the OWNER.

C. Nondestructive Seam Testing:

1. General:

a. Purpose of nondestructive tests is to check continuity of seams. It will not provide quantitative information on seam strength.
b. Nondestructively test field seams over their full length using vacuum test for extrusion seams, air pressure for double-fusion seams, or other OWNER approved method. Document results.
c. Perform nondestructive testing as seaming work progresses.
d. The ENGINEER shall observe all non-destructive testing on a full time basis. The CONTRACTOR and ENGINEER shall coordinate to ensure that all installation activities are monitored by the ENGINEER in accordance with these Specifications.

2. Vacuum Testing for extrusion seam:

a. Energize vacuum pump and reduce tank pressure to approximately 5 pounds per square inch (psig) (10-inches of Hg) (35 kPa) gauge pressure.
b. Wet strip of geomembrane approximately 12-inches by 48-inches (0.3 m by 1.2 m) with soapy solution.
c. Ensure viewing window is clean.
d. Place box over wetted area.
e. Close bleed valve and open vacuum valve.
f. Ensure that leak-tight seal is created.
g. For minimum of 10 seconds, apply vacuum and examine geomembrane through viewing window for presence of soap bubbles.
h. If no bubbles appear within 10 seconds, close vacuum valve and open bleed valve, move box over to next adjoining area with minimum 3-inch (75 mm) overlap and repeat process.
i. Mark and repair areas where soap bubbles appear.

3. Air Pressure Testing for dual track, hot wedge fusion weld:

a. Seal both ends of seam to be tested. Take suitable precautions if sealing seam ends with open flame.
b. Insert needle or other approved pressure feed device into air channel created by fusion weld.
c. Insert protective cushion between air pump and geomembrane.
d. Pressurize air channel to approximately 30-psig (200 kPa). Close valve and allow pressure to stabilize for approximately two (2) minutes.

e. Observe air pressure five (5) minutes after initial stabilization period ends. If pressure loss exceeds 3-psig or pressure does not stabilize, locate faulty area, repair, and retest.

f. On completion of testing, cut opposite end of tested seam length to verify continuity of air channel. If air does not escape, locate blockage and retest unpressurized area. Repair cut end of air channel.

g. Cap any seam length that cannot be successfully air pressure tested.

h. Remove needle or other approved pressure feed device and repair hole in geomembrane.

D. Destructive Seam Testing:

1. General:

a. Purpose of destructive seam testing to evaluate seam strength.

b. Perform destructive seam test as seaming progresses.

c. The destructive seam sample shall fail if the overlap is insufficient for grips of testing machine to close on sample (available flap is 1/2 inch long or less).

2. Location and frequency:

a. Test at minimum frequency of one (1) test location per 500 ft (150 m) of welding length performed by each welding machine. This minimum frequency to be determined as average taken throughout entire facility.

b. Test locations shall be determined by the ENGINEER, during seaming operations.

c. CONTRACTOR will not be informed in advance of locations where seam samples will be taken.

d. OWNER reserves right to increase frequency of testing in accordance with performance results of samples previously tested.

3. Sampling Procedures:

a. Cut samples at locations selected by ENGINEER.

b. ENGINEER shall number each sample and record sample number and location in panel layout drawing.

c. ENGINEER shall mark each section of destructive test sample with sample number, seam number, seamer and machine identification, and date.

c. Repair holes in geomembrane resulting from destructive seam sampling as soon as possible, in accordance with repair procedures described in this Section.

d. Non-destructively test repairs in accordance with this Section.

4. Sample Dimensions:

   a. Field Testing: Cut two (2) 1-inch (25 mm) wide sample coupons, from each end of seam section identified by ENGINEER. Distance between these two (2) samples shall be approximately 42-inches (1.1 m). Test both samples in peel mode, using calibrated field tensiometer. If both samples meet requirements of Part 3.03 (F) of this Section, collect sample for laboratory testing.

   b. Laboratory Testing: Collect laboratory test sample from seam length between field test sample coupon locations. Cut sample for laboratory testing, approximately 12-inches (0.3 m) wide by a minimum 42-inches (1.1 m) long, with seam centered lengthwise. Cut this sample into three (3) sections. ENGINEER shall distribute sample sections as follows:

      1. Geosynthetic Quality Assurance Laboratory: minimum 18inch (0.5 m) long section for laboratory testing.
      2. CONTRACTOR: minimum 12-inch (0.3 m) long section for archive or optional laboratory testing.
      3. OWNER: minimum 12-inch (0.3m) long section for archive storage.

   c. Final determination of sample sizes shall be agreed upon at pre-construction meeting. Sample sizes shall be minimized, consistent with laboratory testing requirements.

   d. Submit laboratory sample for quantitative testing

5. Destructive Test Failure Procedures:

   When sample fails destructive testing, whether test is conducted in the field or at Geosynthetic Quality Assurance Laboratory, CONTRACTOR has following options:

   a. Repair entire seam between two (2) passing destructive test locations along the path of machine producing the failed weld bracketing the failed location.

   b. Trace welding path 10-feet (3 m) minimum in each direction from failed test, and repeat field testing procedures indicated in this Section at each location. If these additional samples pass test, then collect laboratory test samples. If these laboratory samples pass tests, repair seam between these locations. If either, or both, sample fails, repeat process until passing sample is located. Repair seam between passing destructive sample locations.

   c. Acceptable repaired seams shall be bound by passing laboratory destructive tests locations. The ENGINEER shall mark and additional destructive test sample for seam cap strip repairs of 150 ft (50 m) or more.

d. If a destructive test sample fails, OWNER may require additional testing of seams welded by same seamer and/or welding apparatus produced during same time shift as failed seam.

E. Repair Verification:

1. Repairs shall be non-destructively tested.
2. Nondestructive test results that pass shall indicate adequate repair.
3. Destructive test samples shall be collected on repairs at the discretion of the ENGINEER.
4. In the event destructive or nondestructive tests of repairs fail to meet the requirements of this Section, the work will be redone, at no expense to the OWNER, until passing test results are achieved.
5. ENGINEER shall monitor and document geomembrane repairs, and non-destructive testing.

F. Large Wrinkles: Wrinkle is considered to be large when geomembrane can be folded over onto itself.

1. When seaming of geomembrane is completed, and prior to placing overlying materials, ENGINEER shall identify all large geomembrane wrinkles, to be repaired.
2. Cut and repair all wrinkles identified by ENGINEER. Welds produced while repairing wrinkles shall be nondestructively tested.
3. Repair wrinkles identified by ENGINEER. Repair during coldest part of installation period.

***** END OF SECTION *****

SECTION 02598

GEOCOMPOSITE

PART 1 - GENERAL

1.01 DESCRIPTION OF WORK

A. The CONTRACTOR shall furnish all labor, materials, equipment, tools and appurtenances required to install the geocomposite drainage layer as shown on the Contract Drawings.

B. Installation of the geocomposite shall be completed by an experienced specialty SUBCONTRACTOR (Installer) fully qualified to complete the portions of the Work as specified in this Section. Reference to CONTRACTOR implies Installer as appropriate in this Section.

C. The CONTRACTOR shall have overall responsibility for installation of the geocomposite. The CONTRACTOR, as assisted by the Installer, shall provide Shop Drawings and a written description detailing the proposed methods to be employed for performing the Work. All materials, equipment and supplies to be incorporated in the Work shall be described, including seaming/overlapping plans, installation procedures, quality control programs, and any other information needed to show the proposed method of conforming to the Contract Documents.

1.02 SUBMITTALS

A. The CONTRACTOR shall submit to the ENGINEER all items described in subsequent sections as outlined by the following schedule:

Prior to Delivery to the Site

1. Shop Drawings including all geocomposite panel layouts and details of all work including details of all overlapping, tying, sewing repairs, penetrations, and attachments.
2. Geocomposite manufacturer's specifications.
3. Certification stating geocomposite roll numbers and base resin type and lot from which the internal geonet was produced.
4. Geocomposite roll correlation list that clearly shows geonet roll number and geotextile roll number correlated to the geocomposite roll number.
5. Provide certification from the manufacturer that the geocomposite is in conformance with the testing and material requirements of this Section.

Prior to Installation

1. Submit to ENGINEER a schedule of operations including means and methods of installation.

During Installation Submitted Daily

1. Daily construction progress reports clearly showing geocomposite panels placed by date.
2. Summary and log of all laboratory quality control completed by the CONTRACTOR.
3. Certification from the CONTRACTOR and Installer that the geocomposite installed that day was satisfactorily completed in accordance with these Specifications.

After Installation

1. As-built record drawings.
2. Statement of warranty from the CONTRACTOR and geocomposite manufacturer that the material is free from manufacturing defects and that when properly installed and maintained will not suffer significant deterioration due to normal weather aging. Warranty shall be in effect for five (5) years from the date of shipment.

1.03 PRODUCT HANDLING

A. The CONTRACTOR shall protect the work described in this Section before, during, and after installation, and shall protect the installed work from damage from work covered by other Sections of these Specifications.

B. The CONTRACTOR shall, during all periods of shipment and storage, protect the geocomposite from direct sunlight, ultraviolet light, temperatures greater than 120°F, mud, dirt, dust, debris and other possible sources of damage. The geocomposite shall be wrapped in a heavy-duty protective covering until needed for installation.

C. If the ENGINEER determines that the geocomposite material is damaged or has experienced excessive sunlight exposure (more than 15 days), the CONTRACTOR shall immediately make all repairs and replacements, at the CONTRACTOR's expense.

1.04 QUALITY CONTROL (QC) AND CONFORMANCE TESTING OF GEOCOMPOSITE

A. Geocomposites shall be tested prior to shipment to ensure that the properties of the finished product are in accordance with these Specifications. Samples of the geocomposite shall be tested by the manufacturer at the CONTRACTOR's expense. Samples will be tested by the manufacturer at a frequency of one (1) sample for every 50,000 square feet for each lot of material produced for delivery to Site. The required material properties, test methods, values, and units are presented in Part 2 of this Section.

B. Upon delivery of the geocomposite to the Site, the CONTRACTOR shall assist the ENGINEER in obtaining representative samples of the furnished product for conformance testing. Testing shall be at a minimum frequency of one (1) sample per lot with a minimum of one (1) sample (3 feet long by the roll width) per 100,000 square feet of material delivered. Samples will not include the first 3

feet at the end of the roll. Samples of the geocomposite will be tested by a geosynthetics testing laboratory, approved by the ENGINEER, and at the OWNER's expense for the following properties:

1.	Thickness	ASTM D5199
2.	Adhesion Strength	ASTM F904 modified or D413
3.	Transmissivity (geocomposite)	ASTM D4716
4.	Permittivity (geotextile)	ASTM D4491

C. The manufacturer, CONTRACTOR, and the ENGINEER shall visually inspect all samples to assure the material is free of holes or foreign matter.

D. The CONTRACTOR shall provide the ENGINEER with certified copies of the manufacturer's test results. No material shall be installed prior to furnishing the required test results and receiving favorable review.

E. At the discretion of the ENGINEER, additional random samples of the geocomposite for further confirmatory testing may be requested. This testing will be at the expense of the OWNER. This testing may also include some or all of the properties specified in Article 2.02 of this Section and need not be limited to the testing required by the manufacturer. The CONTRACTOR shall assist the ENGINEER in obtaining the samples, as required.

F. The CONTRACTOR shall be solely responsible for the quality of the material provided. Should any of the tests performed on the material yield unsatisfactory results, the CONTRACTOR will be responsible for replacing the material with satisfactory materials without delay to the Work and at CONTRACTOR's expense.

G. Quality control during construction shall be performed in accordance with Part 4 of this Section.

PART 2 - PRODUCTS

2.01 MATERIALS

A. The geonet component of the geocomposite shall be manufactured from pure virgin high-density polyethylene resin (HDPE) satisfactory for the intended use, having a minimum density of 0.940 g/cm^3 (after carbon black blending). The pure virgin resin shall be mixed with two to three percent (2-3%) carbon black, pre-blended according to specifications of the manufacturer.

B. The geotextile portion of the geocomposite shall be a minimum 7.0 oz/sy nonwoven polyester or polypropylene needle-punched geotextile, heat bonded to both sides of a geonet, designed and manufactured specifically for the purpose of liquid filtration and conveyance.

C. Provide the ENGINEER with a written and signed certification from the manufacturers that the geonet portion of the product to be delivered has been extruded from a favorably reviewed HDPE resin satisfactory for the intended

use. No material will be permitted to be shipped to Site until this certification has been delivered to the ENGINEER.

2.02 MANUFACTURING

A. The manufacturer of the geocomposite shall be subject to favorable review by the ENGINEER and have extensive experience in extruding geonet and bonding geotextiles with the geonet. The CONTRACTOR shall submit the manufacturing company, address, and name of contact, with telephone number, to the ENGINEER. The geocomposite shall be formulated from the appropriate polymers and compounding ingredients to form a geocomposite that meets all requirements for the specified end use of the product.

B. Geocomposite rolls shall be a minimum of 6 feet in width. Each roll shall be identified by a lot number, roll number, and date of manufacture.

C. Geocomposite shall be manufactured and fabricated by companies regularly in the business of manufacturing geosynthetic drainage materials. The geocomposite and individual components (prior to fabrication) thereof shall possess the minimum average roll value (MARV) and/or minimum properties as specified in Table 02598A herein.

PART 3 - EXECUTION

3.01 GEOCOMPOSITE INSTALLATION

A. Install the geocomposite drainage layer over the favorably reviewed textured HDPE geomembrane to the lines and grades shown on the Contract Drawings in accordance with the manufacturer's recommendations. Do not cover the geomembrane until the geomembrane installation and test results for that area of work have been favorably reviewed by the ENGINEER.

B. Protect the geomembrane during the installation of the geocomposite layer. No equipment shall be permitted to operate directly on any geomembrane or geocomposite at any time. In no way shall any tracked equipment or any other equipment which may pose a risk of puncturing, tearing, or otherwise damaging the geomembrane or geocomposite be permitted to operate directly on these materials. Provide a minimum 12 inches of separation between the geocomposite and cover soil placement equipment as described in Section 02224 of these Specifications.

TABLE 02598A

Property	ASTM Test Method	Specified Value*	Units
1. Flow Capacity			
a. Transmissivity (Geocomposite) 1000psf & gradient of 0.25	D4716	1.0×10^{-3} (min.)	m^2/sec
b. Permittivity (Top Geotextile)	D4491	1.3 (min.)	$gal/min/ft^2$
2. Mechanical Properties			
a. Grab Tensile Strength (Top & Bottom Geotextile)	D4632	150	lbs
b. Apparent Opening Size (Top Geotextile)	D4751	40	U.S. Std. Sieve
c. Peak Tensile Strength (Geonet)	D5035	40	lb/in. width
d. Ply Adhesion (Geocomposite)	F904 modified or D413	1.5	lb/in.
e. Coefficient of Friction	D5321	27	degrees
3. Material Properties			
a. Polyethylene Density (Geonet)	D1505	0.940	g/cm^3
b. Carbon Black Content (Geonet)	D1603	2.0-3.0	%
4. Dimensions			
Thickness (Geonet)	D5199	0.25 (min.)	inches
Mass/Area (Geotextile)	D5261	7.0 (min.)	oz/sy

* MARV values unless otherwise noted for manufacturer's quality control testing. All values minimum for field conformance testing.

C. The CONTRACTOR and/or Installer shall supply and use a sacrificial smooth geomembrane to aid in the deployment and positioning of geocomposite panels over the textured geomembrane unless an alternate method has been favorably reviewed by the ENGINEER, in accordance with Article 1.02 of this Section, prior to deployment.

D. The geocomposite shall be placed on sideslopes as shown on the Contract Drawings. The geocomposite shall be positioned by hand after being unrolled. Do not crease or fold over the geocomposite.

E. In the presence of wind, all in-place geocomposite rolls shall be weighted with sandbags or the equivalent, such sandbags shall be installed during placement and shall remain until replaced with cover material.

F. Adjacent rolls shall be overlapped a minimum of 4 inches and the geonet secured by plastic ties a minimum of every 5 feet along the roll length. Plastic ties shall be white or other bright and contrasting color for ease of inspection and shall be connected according to the manufacturer's recommendations. Metallic ties are not permitted. The upper geotextile sheets shall then be sewn along their entire length. The bottom geotextile sheets shall be overlapped without sewing. The geonet within the geocomposite, on cross-slope seams or end of panel seams, will be overlapped a minimum of 12 inches and securely fastened together with ties at maximum 12-inch intervals.

G. The geocomposite shall not be welded to the geomembrane.

H. All connections shall be inspected and favorably reviewed by the ENGINEER. The ENGINEER will reject any connections deemed insufficient and require those joints to be redone at the CONTRACTOR's expense.

I. Repairs shall be made in accordance with the manufacturer's procedures and recommendations at the CONTRACTOR's expense. The CONTRACTOR shall submit proposed repair procedures for the favorable review of the ENGINEER.

3.02 PROTECTION

A. After installation, visually inspect the geocomposite to assure that no objects are present that could potentially harm the geocomposite.

B. Any geocomposite damaged during installation or during placement of cover material shall be replaced by the CONTRACTOR at the CONTRACTOR's expense.

C. The Work shall be scheduled so that the covering of the geocomposite is accomplished within fifteen (15) calendar days after placement of the geocomposite. Failure to comply with this requirement shall require replacement of the geocomposite at the CONTRACTOR's expense.

D. No equipment shall be operated directly on the geocomposite prior to the placement of overlying materials. Provide a minimum 12 inches of separation between any geocomposite and low ground pressure equipment (5 psi) or 3 feet of separation when using equipment greater than 5 psi.

PART 4 - QUALITY ASSURANCE/QUALITY CONTROL

4.01 GENERAL

A. The CONTRACTOR, before installation begins, shall appoint an experienced individual thoroughly experienced with work similar to the requirements

specified herein, and who will be on-Site at all times during the installation, to represent the CONTRACTOR in all matters relevant to this Work. This appointment shall be subject to favorable review by the ENGINEER.

B. Before installation begins, and at least weekly thereafter, more often if determined necessary by the ENGINEER, project coordination meetings shall be held with the designated representative of the CONTRACTOR, Installer, ENGINEER, to review the following information:

1. Progress of the work;
2. Adherence to the Specifications;
3. Adherence to the Construction Quality Assurance Plan, including the timely submission of the pertinent forms; and,
4. Planned work and methods for the ensuing week, including estimate of time remaining to completion of the Work.

This information shall be submitted to the ENGINEER by the CONTRACTOR, in writing, during or before this meeting.

C. Any changes in the proposed method of work, SUBCONTRACTORs to be utilized, geocomposite, geotextile, resin or manufacturing must be favorably reviewed in advance by the ENGINEER. The CONTRACTOR assumes all responsibility relevant to providing an acceptable product and installation.

4.02 QUALITY ASSURANCE/QUALITY CONTROL DURING INSTALLATION

A. The Installer and CONTRACTOR shall visually inspect all material to be included in the Work for transport damage and uniformity and compare roll identification numbers with those on the certification provided by the manufacturer to assure delivery of the appropriate material.

B. The Installer and CONTRACTOR shall also visually inspect the material for any damage incurred as a result of handling or on-Site storage.

C. After the CONTRACTOR has completed each area of work and thoroughly inspected all installation and seaming, the ENGINEER will visually inspect all seams for continuity and quality. Do not cover any geocomposite prior to receiving favorable review from the ENGINEER. All inadequate seams shall be repaired at the CONTRACTOR's expense.

*****END OF SECTION*****

SECTION 02600

STEEL PIPE, FITTINGS, AND VALVES

PART 1 - GENERAL

1.01 SUMMARY

A. CONTRACTOR shall provide steel piping and appurtenances as shown on Contract Drawings. This shall include, but is not limited to:

1. SVE piping located inside SVE Blower Building and associated with SVE heat exchange.
2. Condensate drainage piping associated with SVE condensate transfer stations.

B. All piping shall be fabricated and installed for operating ranges as follows:

Stream	Temperature Range	Pressure Range	Material
Condensate	0 °F to 100 °F	0 to 150 psig	Galv. Steel
SVE blower skid discharger	0 °F to 400 °F	0 to 20 psig	Galv. Steel

1.02 REFERENCES

A. American Petroleum Institute (API)

B. American National Standards Institute (ANSI)

C. American Society of Mechanical Engineers (ASME)

D. American Society for Testing and Materials (ASTM)

E. American Water Works Association (AWWA)

F. Fluid Sealing Association (FSA)

G. National Fire Protection Association (NFPA)

1.03 SUBMITTALS

A. Shop Drawings:

1. Submit catalog cuts, specifications, installation instructions, and dimensioned drawings for each type of pipe, fitting, flange, gaskets, fasteners, and specialty.
2. Submit piping schedule showing manufacturer, pipe weight or schedule, fitting type, flange class and joint type for each piping system.

3. Submit valve schedule indicating location, service, size, type, manufacturer and model number of each valve.
4. Submit valve supplier cutsheets for each valve including:

   a. Materials of construction for valve bodies, seats, and seals.
   b. Pressure and temperature ratings.
   c. Detailed dimensions showing width, lengths, thicknesses, tolerances, and other dimensions.
   d. Type of pipe wrap or coatings.

B. Samples – Not Required

C. Submit in accordance with Section 01300.

1.04 QUALITY ASSURANCE

A. Manufacturers: Firms regularly engaged in manufacture of pipe, tube, and fittings of types and sizes required.

B. Welding: Qualify and certify welding procedures, welders, and operators in accordance with ANSI B31.1, Paragraph 127.5, for shop welding of piping work.

PART 2 - PRODUCTS

2.01 MATERIALS

A. Galvanized Steel Pipe:

1. 2-inch and smaller: Threaded pipe shall be a minimum Schedule 40, seamless galvanized steel, ASTM A53, Grade B. Welded pipe shall be a minimum of Schedule 40.
2. 2-1/2-inch through 12-inch: Minimum Schedule 40 unless noted on Drawings, seamless galvanized steel, ASTM A53, Grade B.

B. Stainless Steel Tubing and Tubing Fittings:

1. All tubing shall be ASTM-A-266 316 or 304 stainless steel welded or seamless tubing rated for gas service. Stainless steel tubing shall be fully annealed with a maximum hardness of 80 Rb.
2. Stainless tubing shall have the following minimum wall thicknesses:

Outside Diameter (inches)	Wall Thickness (inches)
1/4	0.035
3/8	0.035
1/2	0.065

C. Fittings:

1. 2-inch and smaller: screwed, 150-lb galvanized steel, ASTM A865. Threads shall conform to ANSI B1.20.1.1.

2. 2-inch and smaller: socket weld end type, galvanized steel, ASTM A3.865.
3. 2-1/2-inch through 12-inch: factory-made, galvanized steel butt-welding type to match pipe wall thickness, ASTM A234.

a. Provide long radius elbows unless otherwise noted on Drawings.

D. Flanges:

1. Galvanized steel.
2. 24-inch and smaller: slip-on or welding neck type Class 150, 1/16-inch raised face, conforming to ANSI B16.5 standard except as otherwise indicated.
3. Provide welding neck flanges when abutting buttweld fittings.

E. Flange Bolting:

1. Provide Type 304 stainless steel bolting unless otherwise noted.

F. Gaskets:

1. Pipe sizes 24-inch and smaller: 1/16-inch thick compressed synthetic fiber, flat ring type with raised face flanges and full face type with flat face flanges.
2. Provide material compatible with compounds selected by gasket manufacturer and suitable for specified fluid service at design temperature. Material shall be UL listed and approved by Factory Mutual.

2.02 FABRICATION

A. Pipe:

1. Pipe size shall be nominal inside diameter of pipe, fitting or special in inches where 12-inch and smaller in size.

B. Joints:

1. 2-inch and smaller: socket weld or screwed joints as required.
2. 2-1/2-inch and larger: butt weld except use flanged joints where required to connect to valves, equipment, and other piping systems.
3. Use flanged joints, mechanical couplings, flanged coupling adapters, or expansion joints where shown on Drawings.

C. Flanges:

1. Attach flanges normal to axis of pipe for proper alignment.
2. After attachment to pipe, maximum layback from inside edge of flange to outside edge of flange shall not exceed 1-1/2 degrees.
3. Test flanges, after welding to pipe, for true plane and reface if necessary to bring them within specified tolerances.

2.03 MISCELLANEOUS PIPING MATERIALS/PRODUCTS

A. Welded Materials: Except as otherwise indicated, provide welding materials to meet installation requirements.

1. Comply with ANSI B31.1.

B. Thread Lubricant: Teflon tape.

2.04 MECHANICAL COUPLINGS

A. Manufacturers:

1. Dresser "Style 38."
2. Rockwell.
3. Or equal.

2.05 FLANGED COUPLING ADAPTERS

A. Manufacturers:

1. Dresser "Style 128."
2. Rockwell.
3. Or equal.

2.06 APPURTENANCES

CONTRACTOR shall provide and install the following appurtenances to the steel piping:

A. Butterfly Valves:

1. Valves shall be teflon coated carbon steel or stainless steel wafertype. Valve shall be non-sparking with Teflon seats and seals.
2. Valves shall be pressure and temperature rated for full vacuum to 30 psig and 0°F to 150°F continuous operating conditions.
3. Valves shall provide tight shut-off in either direction.
4. Valves shall be fire resistant and specifically listed for use with combustible gas.
5. ANSI Class 150 Wafer Design.
6. Valves shall be factory coated with an industrial coating, suitable for outdoor use.

B. Ball Valves

1. 3-piece valves, 2-inches and smaller: carbon steel body, 600 psi WOG, 150 psi steam rated, reinforced TFE packing and seats. Valve shall be equipped with adjustable stem gland screw and removable retainer for replacing seats and seals.

2.07 SPARE PARTS:

A. CONTRACTOR shall provide the following spare parts:

1. Two spare gaskets for each type and size of flange or connection.
2. Two of each type of expansion joint or flexible connector.

PART 3 - EXECUTION

3.01 ABOVE GROUND INSTALLATION

A. Install in accordance with submittals approved by ENGINEER. Prior to fabrication, verify the required dimensions for instrumentation and equipment with instrumentation and Equipment Vendor's information.

B. Install pipe, fittings, and specials in accordance with recognized industry practices achieving permanently leakproof piping systems, capable of performing each indicated service without piping failure. Install each run with minimum of joints. Reduce sizes (where indicated) by use of reducing fittings. Align piping accurately at connections.

C. Comply with ANSI B31.1.

D. Store all uncoated piping and specialties in area free from dust and moisture. Maintain pipe end caps during storage, handling and fabrication to prevent pipe end damage and eliminate dirt and moisture from inside pipe in accordance with Section 01611.

E. Fittings that unite dissimilar metals shall be connected with dielectric insulating type connector.

3.02 FLANGED JOINTS

A. Where 150-pound steel flanges are bolted to Class 125 cast iron flanges, the raised face on the steel flange shall be removed.

B. Lapped flanges shall be permitted to be used only above ground.

3.03 WELDED JOINTS

A. Welds shall be sound and free from embedded scale of slag, have tensile strength across weld not less than that of thinner of connected sections, and be watertight.

B. Use buttwelds for welded joints in the pipe assemblies and fabrication of bends and other specials.

C. Use filled welds for flange attachment in accordance with AWWA C207.

D. Conform field welding of joints and preparation of pipe ends to AWWA C206 and ASTM A139.

3.04 THREADED JOINTS

A. Pipe and fitting threads shall comply with ANSI/ASME B1.20.1.

B. Pipe with threads that are stripped, chipped, corroded, or otherwise damaged shall not be used.

C. Shop threading of metallic pipe shall meet the requirements of referenced standards and be at a minimum:

Length of Pipe Size (in)	Minimum Threaded Portion (in)	Number of Threads
1/2	3/4	10
3/4	3/4	10
1	7/8	10
1-1/4	1	11
1-1/2	1	11
2	1	11

Reference: NFPA 54.

D. Thread compounds shall be resistant to the chemical constituents of the gas.

3.05 TUBING JOINTS/BENDS

A. Bends shall be made only with bending equipment and procedures especially intended for that purpose.

B. All bends shall be smooth and free from buckling, cracks, or other evidence of mechanical damage.

C. The longitudinal weld of the pipe shall be near the neutral axis of the bend.

D. Pipe shall not be bent through an arc of more than 90 degrees.

E. The inside radius of a bend shall be not less than 6 times the outside diameter of the pipe.

3.06 IDENTIFICATION MARKER

A. Identify all valves on the system with brass tags with the valve designation permanently stamped on the tag. The CONTRACTOR shall prepare a valve schedule including alpha-numeric designations for each valve and submit the schedule to the ENGINEER for approval prior to purchasing and installation of the tags. The valve schedule shall include the valve designation, type and location, and shall be submitted in accordance with Section 01300 Submittals.

3.07 QUALITY CONTROL/QUALITY ASSURANCE

A. Prior to acceptance of Work, the CONTRACTOR shall submit to the ENGINEER written certification of the following:

1. Fabrication of piping systems in accordance with referenced standards.
2. Satisfactory pressure and vacuum testing of piping systems in accordance with Section 01666.
3. Satisfactory inspection of the finished surface coating certifying that it is free of bubbling, cracks, peeling, and other indications of improper application of coatings.

*****END OF SECTION*****

SECTION 02610

POLYVINYL CHLORIDE (PVC) PIPE, PLASTIC VALVES,
FIELD INSTURMENTS AND FLOW METERS

PART 1 - GENERAL

1.01 SUMMARY

A. CONTRACTOR shall provide PVC piping and plastic valves as shown on Contract Drawings. Items provided under this Specification must meet the following criteria:

1. PVC pipe shall only be installed at those locations specifically shown on the Contract Drawings. These locations are limited to the SVE wells, well screens, well laterals, and SVE header system.
2. SVE header valves (including control valves and sample port valves) shall be constructed of PVC meeting the requirements of Paragraph 2.02.
3. All connections shall be glued or flanged unless specifically noted.

B. All PVC piping and plastic valves shall be fabricated and installed for operating ranges as follows:

1. Temperature Range: -40°F to 150°F
2. Pressure Range: Full vacuum to 150 psig

1.02 REFERENCES

A. American National Standards Institute (ANSI):

1. ANSI B1.20.1 - Pipe Threads, General Purpose (Inch).
2. ANSI B16.5 - Steel Pipe Flanges and Flanged Fittings.

B. American Society for Testing and Materials (ASTM):

1. ASTM A193/A193M-01b - Standard Specification for Alloy-Steel and Stainless Steel Bolting Materials for High Temperature Service.
2. ASTM A194/A194M-01a - Standard Specification for Carbon and Alloy Steel Nuts for Bolts for High Pressure and High Temperature Service.
3. ASTM D1784-99a - Standard Specification for Rigid Poly (Vinyl Chloride) (PVC) Compounds and Chlorinated Poly (Vinyl Chloride) (PVC) Compounds.
4. ASTM D1785-99 - Standard Specification for Poly (Vinyl Chloride) (PVC) Plastic Pipe, Schedules 40, 80, and 120.
5. ASTM D2464-99 - Standard Specification for Threaded Poly (Vinyl Chloride) (PVC) Plastic Pipe Fittings, Schedule 80.
6. ASTM D2467-01 - Standard Specification for Socket-Type Poly (Vinyl Chloride) (PVC) Plastic Pipe Fittings, Schedule 80.
7. ASTM D2564-96a - Standard Specification for Solvent Cements for Poly (Vinyl Chloride) (PVC) Plastic Pipe and Fittings.

1.03 SUBMITTALS

A. Shop Drawings

1. Submit catalog cuts, specifications, installation instructions including support requirements, and dimensioned drawings for each type of pipe, fitting, flange, gaskets, fasteners, and specialty.
2. Submit piping schedule showing manufacturer, pipe weight or schedule, fitting type, flange class and joint type for each piping system.
3. For all valves provide pressure drop data (Cv coefficient) and detailed drawings showing materials of construction, dimensions of all parts including seats, seals, valve stems, handles, and remote operators.
4. For all differential pressure measuring devices (i.e. orifice flow meters), provide manufacturer's information and calculations on size, bore, flow range, and pressure loss range, and graphical representation of flow versus pressure loss.

B. Samples - Not Required.

C. Submit above in accordance with Section 01300.

PART 2 - PRODUCTS

2.01 PVC PIPE AND ACCESSORIES

A. Pipe

1. Type 1, Grade 1 conforming to ASTM D1784.
2. Schedule 80 PVC conforming to ASTM D1785.

B. Fittings

1. Schedule 80 PVC

a. ASTM D2464 for threaded joint type.
b. ASTM D2467 for socket joint type.

C. Joints

1. Provide socket type at all locations except unions, valves, and equipment with flanged end connections.
2. Threaded connections are not acceptable for nominal piping size greater than 1 inch unless noted on Contract Drawings.

D. Flanges

1. PVC, 1-piece socket type, flat faced, conforming to ANSI B16.5 150-lb bolt hole drilling pattern.

E. Gaskets

1. Full-face, 1/8-inch thick flat type.
2. When mating flange has raised face, use flat ring gasket and provide filler gasket between outside diameter of raised face and flange outside diameter to protect flange from bolting moment.
3. Gasket material shall be 1/8-inch thick. Piping gasket material shall be PVDF or Viton.

F. Bolting

1. Bolts, nuts and washers: Stainless steel and not smaller than 1/4-inch; bolts shall have hexagonal heads and nuts shall be hexagonal.
2. Fittings that unite dissimilar metals shall be dielectric insulating type.

G. Solvent Cement

1. Join socket connections with PVC solvent cement conforming to ASTM D2564.
2. As recommended by pipe and fitting manufacturer to assure compatibility.

H. Thread Lubricant

1. Teflon or PTFE tape.

2.02 PVC VALVES

A. Ball Valve

1. Type 1, Grade 1 PVC ball valve suitable and compatible for fluids.
2. Seats and seals of resilient, self-lubricating materials. Piping system seats and seals shall be PVDF or Viton.
3. Fully adjustable to compensate for seat wear.
4. Full port opening with minimal pressure drop.
5. Self-aligning ball, free floating between seals, seal in either direction.
6. For larger than 1-1/2-inch, provide with true union flanged fittings for replacing seats and seals. For sizes 1-1/2-inch and smaller, provide molded one-piece construction with threaded connection.
7. Stainless steel machine screw.
8. All sizes rated for full vacuum to 150 psig.
9. Ball valves shall be:
   a. 1/2-inch to 1-1/2-inch Asahi/America Omni Ball Valve
   b. 2-inch to 10-inch Asahi/America Duo-Bloc
   c. or favorably reviewed equivalent.

B. Butterfly Valve

1. Wafer style butterfly valve with bubble-tight seating with flow in either direction. Disc and liner shall be the only parts in contact with fluid.

2. Type I, Grade I PVC body with Type I polypropylene disc. Piping system liner, seats and seals shall be Viton or PVDF.
3. Stainless steel shaft isolated by O-ring seals.
4. Rated for full vacuum to 150 psig
5. Butterfly valves shall be Asahi/America Type 75 or favorably reviewed equivalent.

C. Gate Valve

1. Type 1, Grade 1 PVC gate valve.
2. Gate shall be tapered cylindrical plug constructed of Type I polypropylene or PVDF design for throttling application.
3. Seats and seals shall be PVDF, Viton, or PTFE.
4. Rated for full vacuum to 150 psig.
5. Gate valves shall be Asahi/America or favorably reviewed equivalent.

D. Check Valve

1. Swing check valves shall be Type 1, Grade 1 PVC check valves compatible for fluids and having no metal to media contact.
2. Piping system seats and seals shall be PVDF or Viton.
3. Valves shall be top entry to facilitate cleanout. Discs shall seal tightly with minimum back pressure and be designed for installation in horizontal or vertical positions.
4. All metal fasteners shall be stainless steel.
5. Valve bodies shall be flanged to meet ANSI specifications. Valves shall be rated for 150 psig at 100°F.
6. Check valves shall be Asahi/America or favorably reviewed equivalent.

2.03 FLOW MEASUREMENT

A. Orifice Flow Meters

1. Orifice flow meters shall be Oripac Model 4150-P or equivalent (all PVC).
2. Each well lateral and remediation area shall be provided with orifice flow meters, as shown on the Contract Drawings.
3. Provide Prestolok fittings for each orifice flow meter to use with the differential pressure gauge described in 2.03.B.

B. Differential Pressure Gauge

1. Differential pressure gauges shall be Magnehelic Series 2000 brand.
2. Provide two portable differential pressure gauges for measurement of orifice flow meters at each well lateral.
3. The low temperature models, rated for –20 to +140 deg F, -20-inch Hg max vacuum, shall be purchased.
4. Connections shall be 1/8-inch female NPT high and low pressure taps on side.

2.04 VACUUM GAUGES

A. 30" – 0" Hg vacuum range.

B. 2"- dial face, bottom mounting ¼" NPT.

C. Stainless steel construction.

PART 3 - EXECUTION

3.01 INSTALLATION

A. Install products as shown on Contract Drawings, and as specified in applicable piping system specification section(s).

B. Install products in accordance with manufacturer's written instructions.

C. When new or existing pipe is required to be cut, the pipe shall be cut in such a manner as to leave a smooth end normal to the axis of the pipe.

D. All cutting of PVC pipe shall be performed with a PVC cutting saw. All burrs shall be removed from the inside and outside edges of all cut pipe. Following the removal of burrs, inside of pipe shall be cleaned of all PVC shavings.

E. All solvent-welded joints shall be in accordance with ASTM 2855.

F. Proper and suitable tools and appliances for safe and convenient handling and laying of pipe and fittings shall be used. Any remedy to damaged pipe shall be satisfactory to the ENGINEER.

G. All pipe and fittings shall be carefully examined by the CONTRACTOR for defects just before installing and no pipe or fitting shall be installed if it is defective. If any defective pipe or fitting is discovered after having been installed, it shall be removed and replaced in a satisfactory manner with a sound pipe or fitting by the CONTRACTOR at CONTRACTOR's own expense.

H. All pipes and fittings shall be thoroughly cleaned before they are installed and shall be kept clean until they are used in the completed work. Open ends of pipe shall be kept plugged with a bulk head during construction.

I. All elbows, tees, brackets, valves and reducers in pressure piping systems shall be adequately restrained against thrust.

J. Cutting or weakening of structural members to facilitate pipe installation shall not be permitted. All piping shall be installed in place without springing or forcing.

K. All valves shall be separately supported or pipe supports shall be provided adjacent to the valve connections.

L. All PVC pipe and fittings shall be tested in accordance with Section 01666.

3.02 IDENTIFICATION MARKER

A. Identify all valves on the system with brass tags with the valve designation permanently stamped on the tag. The CONTRACTOR shall prepare a valve schedule including alpha-numeric designations for each valve and submit the schedule to the ENGINEER for approval prior to purchasing and installation of the tags. The valve schedule shall include the valve designation, type and location, and shall be submitted in accordance with Section 01300 Submittals.

B. Vertical pipe risers in the Well Valve Building was be labeled with the SVE well designation it is connected to. Install in clear view and align with the axis of piping. Letters shall not be smaller than ¾" high.

*****END OF SECTION*****

SECTION 02615

HDPE PIPE

PART 1 - GENERAL

1.01 DESCRIPTION OF WORK

A. The CONTRACTOR shall furnish all labor, materials, equipment, tools and appurtenances required to complete the work of furnishing, placing and testing the piping for the SVE system as shown, specified, and as otherwise required by the Contract Documents.

B. The CONTRACTOR shall comply with applicable codes, ordinances, rules, regulations and laws of local, municipal, State or Federal authorities having jurisdiction. The CONTRACTOR shall provide a "Competent Person" to implement, supervise, and inspect the Work.

C. Reference to CONTRACTOR implies manufacturer as appropriate in this Section.

1.02 SUBMITTALS

A. Manufacturer's Literature:

1. The CONTRACTOR shall submit Manufacturer's certification that proposed HDPE pipe material meets the requirements of Part 2 of this Section.
2. The CONTRACTOR shall submit manufacturer's catalog cut sheets, specifications, installation instructions, and other related literature for:

    a. Pipe and pipe fittings; and,
    b. Supports, flanges, gaskets, fasteners, and other specialties.

    The submittal is to include material specifications, coatings, linings, dimensions, SDR ratings, tolerances, and all other related data.
3. The CONTRACTOR shall submit the selected manufacturer's recommended procedures for:

    a. Butt-fusion welding

B. Submit in accordance with Section 01300 of these Specifications.

1.03 QUALITY ASSURANCE

A. Manufacturers:

1. Phillips 66;
2. Plexco Amsted Industries,
3. Or equal.

B. Pipe installation shall be performed by skilled workers. Each pipe laying crew shall have a pipe laying foreman.

C. Accurately install pipe to the lines and grades shown on the Contract Drawings, or as directed by the ENGINEER.

D. Deflections in horizontal alignment at joints are not permitted without the written consent of the ENGINEER. If so approved, the deflections shall not exceed one-half of the manufacturer's recommendation.

E. The ENGINEER shall be notified whenever an existing pipeline location or other existing feature conflicts with the proposed locations of the Work.

F. Pipe and fittings of the same type shall be the products of a single manufacturer.

G. Pipe Adapters: Join pipes of different materials with adapters specifically manufactured for that purpose and as favorably reviewed by the ENGINEER.

H. All piping shall be of the type and size as shown on the Contract Drawings and described herein.

1.04 DELIVERY, STORAGE, AND HANDLING

A. All pipes and fittings shall be carefully handled when loading and unloading. Lift by hoists or lower on skidways in a manner to avoid shock.

B. Where required, due to weight of material and for the safety and protection of workmen, materials, equipment, property, and the Work, use derricks, ropes, or other suitable equipment for lowering pipe into trenches. Take particular care to avoid damaging the pipes.

C. Store piping and related materials so as to cause the least possible interference with the Work.

D. Pipes and fittings shall be protected against damaging ultraviolet rays from the sun, when stored for any period. Such protection shall consist of canvas covering, or other material as recommended by the manufacturer.

E. The manufacturer's recommended procedures for pipe stacking shall be followed. When pipes are stacked for storage, the heaviest series of pipe shall be placed at the bottom.

F. Pipes and fittings shall be protected from damage by sharp objects through all phases of the Work.

G. To the best extent possible, pipes and fittings shall be protected from dirt and debris entering into the pipe interior. Pipes and fittings shall be cleaned prior to installation in accordance with Article 3.02 herein.

H. If any defective pipes are discovered prior to or after being laid or placed, removal and replacement with a sound pipe will be required at the CONTRACTOR's expense.

PART 2 - MATERIALS

2.01 PIPE AND FITTINGS

A. Piping resins shall be high performance, high molecular weight, high-density polyethylene conforming to ASTM D1248 (Type III, Class C, Category 5, Grade P34), and ASTM D3350 (Cell Classification PE345434C). The pipe and fittings shall be manufactured from pre-compounded resin manufactured with a minimum of two percent (2%) carbon black to withstand outdoor exposure without loss of properties. In-plant blending of non-compounded resins is not acceptable. All polyethylene pipe shall meet the requirements of ASTM F714 for SDR-11 pipe as called out on the Contract Drawings. Each pipe length shall be marked with the manufacturer's name or trademark, size, material code, and standard dimension ratio (SDR). All fittings shall be SDR-11 molded unless denoted on the drawings. No fabricated or electrofusion connection shall be allowed without favorable review by ENGINEER.

B. Pipes shall contain no recycled compound except that generated in the manufacturer's own plant from resin of the same specification from the same raw material. Pipes shall be homogeneous throughout and free of visible cracks, holes (other than those manufactured), foreign inclusions, or other deleterious defects, and shall be identifiable in color, density, melt index, and other physical properties.

C. The polyethylene pipe manufacturer shall provide certification that stress regression testing has been performed on the specific product. This stress regression testing shall have been done in accordance with ASTM D2837, Class PE3408, and the manufacturer shall provide a product supplying a minimum hydrostatic design basis (HDB) of 1,600 psi at 63.4°F, as determined in accordance with ASTM D2837.

D. Each pipe shall meet the following cell classification standards:

Property	Requirement
Flexural Modulus:	110,000 to 160,000 psi
Tensile Strength:	3,000 to < 3,500 psi
Environmental Stress Crack Resistance:	Test Condition C Test Duration 192 hours Maximum % Failure = 20
Hydrostatic Design Basis (23°C)	1,600 psi
SDR 11.0 Pressure Rating (73°F)	160 psi

2.02 PIPING ACCESSORIES

A. Bolts, nuts and washers: Type 304 or 316 stainless steel, and not smaller than ¼-inch; bolts shall have hexagonal heads and nuts shall be hexagonal.

B. Fittings that unite dissimilar metals shall be dielectric insulating type.

C. Flanged connections to valves, equipment and other piping materials shall be made with a HDPE stub-end flange adapter and epoxy coated carbon steel backing ring unless otherwise shown on Contract Drawings.

D. Piping located inside vaults, manholes, or enclosures shall be supported as shown on the Contract Drawings or by other methods favorably reviewed by the ENGINEER.

PART 3 - EXECUTION

3.01 INSPECTION - GENERAL

A. Each length of pipe and each fitting shall be carefully inspected prior to lowering into trench. All materials not meeting the requirements of these Specifications, or otherwise found defective or unsatisfactory by the ENGINEER, shall be rejected and immediately marked and removed from the Site by the CONTRACTOR. The CONTRACTOR shall provide suitable replacement materials, conforming to these Specifications, at no additional cost to the OWNER.

B. Bedding, subgrade, and other trench conditions shall be carefully inspected prior to laying pipe in each stretch of open trench. All conditions shall be made available to the ENGINEER for inspection purposes.

C. Each stretch of completed pipeline shall be inspected for direction and percentage of slope verified by the ENGINEER prior to backfilling. Backfilling operations shall not be initiated prior to inspection and favorable review by ENGINEER.

3.02 PREPARATION

A. Pipe and fitting interiors and joint surfaces shall be thoroughly cleaned prior to installation in accordance with Section 01666 of these Specifications. Pipes and fittings shall be maintained clean.

3.03 PIPE INSTALLATION

A. Underground sections of pipes and fittings shall be carefully lowered into the trench.

B. Pipe and fittings shall be installed so that there will be no deviation at the joints and so that inverts present a smooth surface. Pipe and fittings which do not fit together to form a tight fitting joint are not permitted.

C. Unless noted on Contract Documents, all HDPE joints shall be butt-fusion welded. Butt-fusion welds shall be performed as follows, unless otherwise recommended by the pipe manufacturer:

1. Clean pipe ends inside and outside with a clean rag to remove dirt, water, grease, and other foreign materials.
2. Square cut end of each pipe section with the facing tool of the fusion machine or plastic pipe cutters. Remove cuttings and burrs from pipe ends.
3. Check lineup of pipe ends in the fusion machine to ensure that pipe ends meet squarely and completely over entire surface to be fused. Proper alignment is necessary to obtain uniform heating of the pipe ends and uniform bead at fused joint.
4. Heater Plate:

    a. Insert the heater plate between the aligned pipe ends. Bring and hold pipe ends in contact with heater plate.
    b. Maintain contact without pressure and allow pipe to heat and soften approximately:
        (1) 1/8-inch back from pipe end for 2-inch pipe.
        (2) 3/16-inch back from pipe end for 3-inch and larger pipe.
    c. Heater thermometer reading shall be between:
        (1) 500°F and 575°F on coated plates.
        (2) 475°F and 500°F on uncoated plates.
    d. Double check heater plate temperature with a tempilstik or pyrometer for correct surface temperature.
    e. Carefully move pipe ends away from heater plate and remove plate.
    f. If softened material sticks to plate, discontinue the joint. Clean heater plate, resquare pipe ends, and start over.

5. Flash Bead:

    a. Bring heated pipe ends together with firm pressure per Manufacturer's recommendation to form a uniform upset flash bead approximately 1/8 inch to 3/16 inch wide around entire circumference of pipe.
    b. Bead will have appearance of double upset flash.
    c. Pressure is necessary to cause heated material to flow together, which gives the fusion bead an appearance that is distinctive in appearance to this type of material.
    d. Maintain pressure until the joint cools.

6. Allow joint to cool (until finger can remain comfortably on bead) and solidify until bead feels hard. After joint is cool, remove from lineup clamps.

7. Inspect joint for uniform nonporous appearance.
8. If joint appears faulty, cut the joint and repeat procedure.

D. Pipes shall be installed in the locations and to the required lines and grades as shown on the Contract Drawings and provided in these Specifications. The ENGINEER has the authority to order the removal or relaying of all pipe laid contrary to the Specifications.

E. Excavate, support, and dewater pipe trenches in accordance with Sections 02140, 02150, and 02220 of these Specifications. Excavations shall be maintained free of water during the progress of the Work. All slides or cave-ins of the trenches or cuts shall be remedied to the satisfaction of the ENGINEER.

F. Maintain cleanliness of installed pipe and fittings interiors throughout the Work. Plug ends when pipe installation is not in progress. Remove all plugs as required to place pipe into operation. Drainage of construction excavations through new pipes is prohibited.

G. All adjustments to the line and grade of pipe shall be done by scraping away or filling in the bedding under the barrel of the pipe and not by blocking or wedging. Where additional bedding is required, it shall be provided at the CONTRACTOR's expense. In all cases, the trench under the joint shall be excavated and suitably shaped to permit an even bearing for the barrel of the pipe. The minimum depth of bedding, as shown on the Contract Drawings, shall be maintained at all times.

H. Fittings shall be installed as required and in accordance with the Contract Documents. The installation of fittings after the pipeline has been laid will not be permitted without the favorable review of the ENGINEER.

I. Favorable review by the ENGINEER is required prior to changing the location of any of the Work due to field conditions. Changes in pipe sizes are prohibited without prior written consent from the ENGINEER.

J. All installed piping shall form completely connected systems including connections to and appurtenances specified in other Sections to result in a satisfactorily operating installation.

K. All pipe shall be so laid that after the line is completed, the interior surface thereof shall conform accurately to the established grade and alignment. No deflections shall be allowed at joints. Piping shall be laid as specified below:

1. Pipe assembly shall be lowered carefully into prepared trench.
2. Line shall not be dropped or subjected to jarring, impact, or unnecessary strain.
3. Sections not carefully lowered in place shall be raised and reinspected. Damaged sections shall be replaced.
4. Excess stress or strain conditions shall be avoided during installation.
5. Pipe being pulled for placement shall not exceed 200 feet in length.

6. Maximum pulling force that can be applied to a pipe can be estimated by multiplying the maximum allowable stress by the cross sectional area of pipe. Pipe shall not be pulled by flanged end.
7. Pipe shall be inspected for cuts, gouges and knicks. Piping having visible cuts, gouges or knicks shall not be used.

L. Minimum pipe lengths of 20 feet (up to maximum pipe lengths of 40 feet) shall be utilized, except that shorter random lengths may be utilized where wyes and tees are present so that the connection can be made. The number of pipe joints shall be minimized. The CONTRACTOR shall provide proper smooth and square ends prior to assembling.

M. Maintain the specified depth and compaction of the embedment materials as shown on the Contract Documents and as specified in Section 02233 of these Specifications.

N. Bends

1. Joints shall not be located in pipe bends.
2. The radius of the inner curve of such bend shall not be less than 25 times the inside diameter of the pipe.

O. Tests

1. All pipe testing shall be completed as specified in Section 01666 of these Specifications.
2. Any damaged or defective pipe, fittings or valves revealed during the pressure test shall be removed and replaced, by the CONTRACTOR, at his expense, with sound material, in the manner previously specified, and the test shall be repeated until satisfactory to the ENGINEER.
3. The ENGINEER shall be furnished a written report of the results of the leakage test that identifies the specific length of pipe tested, the pressure, the duration of the test, and the results. The report shall be signed by the CONTRACTOR. The ENGINEER will witness all leakage tests.
4. Remedy of Leaks

   a. If any test of pipe laid discloses leakage, locate and repair (or replace if pipe or fittings are defective) the defective joints until the leakage is within the allowable tolerance.
   b. All leaks are to be repaired regardless of the amount of leakage.

*****END OF SECTION*****

SECTION 02675

MONITORING WELL INSTALLATION

PART 1 - GENERAL

1.01 DESCRIPTION OF WORK

A. The CONTRACTOR shall provide all labor, equipment, materials, tools, services, and other related items necessary to complete the installation of a monitoring well as shown on the Contract Drawings. Reference to CONTRACTOR implies Drilling Subcontractor as appropriate in this Section.

B. The CONTRACTOR is responsible for identifying and obtaining all appropriate licenses, approvals, and permits, as necessary to complete the work of this Section. The CONTRACTOR shall provide a "Competent Person" to implement, supervise, and inspect the Work.

C. Prior to the installation of the monitoring well, the CONTRACTOR shall identify and perform any necessary utility mark-outs.

D. The CONTRACTOR shall coordinate the work of this Section with the work of other Sections, as required.

E. The approximate locations of the monitoring well is shown on the Contract Drawings. Exact locations will be determined and field verified by the CONTRACTOR with approval from the ENGINEER prior to the installation of the well.

1.02 SUBMITTALS

A. Drilling methods are described in Part 3 herein. The CONTRACTOR shall submit any recommended alternative drilling method(s) based on the reported Site conditions.

B. Submit a Statement of Qualifications for the CONTRACTOR who will perform the installation. Include resumes of drilling crews and the superintendent and documentation verifying the driller(s) possess a Commonwealth of Pennsylvania Water Well Driller's License. Submit safety records (OSHA 200 logs and Experience Modification Ratings for the last 3 years) and insurance rating.

C. Submit a complete list of all equipment to be used for portions of the Work described in this Section including proposed drill rigs and associated torque capacity. Submit an installation schedule and update it weekly during the Work.

D. No work shall be performed until the items required in Articles 1.02A through 1.02C above, have been favorably reviewed by the ENGINEER.

E. During drilling, maintain a detailed daily driller's report and submit daily to the ENGINEER. The report shall give a complete description of all formations or material encountered, number of feet drilled, number of hours on the job, shutdowns, feet of casing set, and other pertinent data.

F. Upon completion of the monitoring well, the CONTRACTOR shall submit, to the ENGINEER, a report including the following:

1. Total depth of the completed well;
2. Depth or location of any lost drilling materials or tools;
3. Nominal hole diameter of the bore and total depth;
4. Volume and amount of materials (including number of bags) used to fill the annular space;
5. Depth and description of the well casing and screen;
6. Protective casing, plug, cap size, and materials used;
7. Concrete, bentonite, or grout materials used and depths;
8. Number and location of centralizers used;
9. Weather conditions during installation;
10. Name of individual who prepared the report and members of the drilling crew;
11. Date and time of installation; and,
12. Other pertinent data requested by the ENGINEER.

G. Following completion of the monitoring well, the CONTRACTOR shall submit, to the ENGINEER, jarred representative geotechnical samples of the logged materials. Samples shall be clearly and indelibly labeled with the following information:

1. Name, number, and location of the well;
2. Depth interval represented by the sample;
3. Date and time taken; and
4. Name of individual who collected the sample.

H. Following completion of the monitoring well, the CONTRACTOR shall submit, to the ENGINEER, signed copies of the driller's log book including the following information:

1. Reference point (e.g., top of casing) for all depth measurements;
2. Depth at which each change of material occurs;
3. Identification of the material of which each stratum is composed;
4. Depth interval from which sample was taken;
5. Name of individual who prepared log and members of drilling crew;
6. Water use during drilling;
7. Penetration resistance during split-spoon sampling (if any);
8. Water levels encountered during drilling;
9. Drill rig type, make, and torque capacity;
10. Split-spoon hammer weight and fall (if applicable);
11. Date and time of installation; and,
12. Other pertinent data requested by the ENGINEER.

I. The CONTRACTOR shall submit the monitoring well coordinates, ground surface, and top of inner and outer casing elevations certified by a surveyor licensed in the Commonwealth of Pennsylvania.

J. The CONTRACTOR shall submit product data for the following:

1. Casing pipe;
2. Monitoring well screen;
3. Drilling fluid materials and additives (if used); and,
4. Mix design of neat cement and cement grout.

K. The CONTRACTOR shall submit a completed Water Well Completion Report to the Pennsylvania Bureau of Topographic and Geologic Survey as required by Act 610 (the Water Well Drillers License Act). Submit five (5) copies to the ENGINEER immediately upon completion of the monitoring well.

1.03 RELATED SECTIONS

A. Liquids Handling and Disposal – Section 02402

B. Decontamination Specifications for Construction – Section 02431

C. Seeding – Section 02936

1.04 QUALIFICATIONS

A. The CONTRACTOR'S driller who is responsible for the construction of the monitoring well shall be licensed in the Commonwealth of Pennsylvania and employ only competent workmen for the execution of this portion of the Work. All such work shall be performed under the direct supervision of an experienced driller favorably reviewed by the ENGINEER.

B. The driller shall be capable of identifying geologic formations, maintaining complete and current well logs and daily notes for the well completion report. However, the geologic well log and installation well log will be provided by the ENGINEER.

C. The CONTRACTOR shall provide satisfactory evidence that all materials to be furnished in performing the work of this Section are new and all equipment to be used is in good working order.

1.05 HANDLING OF MATERIALS

A. All parts and materials shall be properly protected so that no damage, deterioration, or contamination will occur from the time of shipment until the work described in this Section is complete.

B. If in the opinion of the ENGINEER, parts and materials are damaged, deteriorated, or contaminated, the materials will be rejected and immediately removed from the Site. The CONTRACTOR shall replace the parts and materials at the CONTRACTOR'S expense.

1.06 SITE CONDITIONS

A. Coordinate access approvals with the ENGINEER. Notify corporations, companies, individuals or authorities owning conduit wires or pipes running to property or encountered during construction. Protect, support, and maintain conduit, drains, sewers, pipes, and wires.

B. Mud or water pits or other temporary excavation shall not be used for construction purposes. Only aboveground, non-intrusive structures shall be used.

C. Perform Site grading, filling, and surface stabilization, if necessary, to access the Site with drilling equipment. The CONTRACTOR shall repair any damage caused to property conditions as a result of (either directly or indirectly) monitoring well installation activities. Repairs shall include, but shall not be limited to, re-seeding and regrading any disturbed areas.

PART 2 - PRODUCTS

2.01 PERMANENT (INNER) CASING PIPE

A. 2-inch I.D. PVC Pipe: Schedule 40 with flush threaded joints and "O" rings.

B. 2-inch PVC Schedule 40 flush threaded and cap.

2.02 GROUT

A. Neat Cement:

1. Neat Cement Grout: Cement and water in proportion of 1 bag (94 lb) Portland cement to 6.0 gal clean water. Slurry weight of 13.4 to 14.5 lbs/gal. A mud balance shall be used to verify slurry weight.
2. Mix design, method of mixing, and consistency of grout shall be accepted by the ENGINEER.
3. Cement grout admixtures may be used to increase fluidity, reduce shrinkage or control time of set. Use of admixtures shall be accepted by the ENGINEER prior to use.

    a. No more than 5 lbs of bentonite may be added per bag (94 lb) of cement.

B. Bentonite Grout

1. Bentonite grout shall be PureGold Grout manufactured by American Colloid Company, or Benseal as manufactured by Baroid Drilling Fluids, or favorably reviewed alternate.
2. Mix in accordance with manufacturer's instructions. If needed, water for bentonite slurry mixing shall be provided by CONTRACTOR. Mixing of the bentonite slurry shall continue until all lumps are removed.
3. If used, bentonite slurry shall be tremied. Bentonite seals shall be completed in a manner that provides a complete seal without voids.

C. Pellet Seal - Use 1/4" bentonite pellets

D. Mixing Water

1. Clean, potable water shall be used.
2. The CONTRACTOR shall supply sufficient potable water as it is not available on-site.

2.03 SCREEN

A. Manufacturers:

1. Howard Smith Screen Company.
2. Johnson Screen Company.
3. Or equal.

B. Schedule 40 PVC, pipe size, having minimum inside diameter of 2-inches.

C. Estimated screen slot size: 0.010 inch, to be verified by the ENGINEER.

D. Close bottom with threaded plug of same material as the screen.

E. All fittings shall be flush threaded with "O" rings.

2.04 FILTER PACK

A. Manufacturers:

1. Morie Company, Inc.
2. Or equal.

B. Clean, washed, acid-resistant, well rounded, graded flint/quartz type grains. Free of foreign material.

C. Size determined by the ENGINEER.

PART 3 - EXECUTION

3.01 EXAMINATION

A. Inspect all materials upon delivery and before placement to document that they are in the original packaging as supplied by the manufacturer or supplier and free of any material that may alter the chemical quality of the well.

3.02 PREPARATION

A. Protect existing structures from damage.

B. Prepare the area for staging of drill cuttings prior to relocation to designated areas on the Site as approved by the ENGINEER.

C. The CONTRACTOR shall provide access to all wells. Proposed access locations shall be reviewed with the ENGINEER.

3.03 GENERAL

A. Previously installed monitoring wells at the Site have employed air rotary and simultaneous casing advancement drilling techniques. Proposed drilling methods shall be favorably reviewed by the ENGINEER and shall conform to all State and local standards for monitoring well construction.

1. Acceptable drilling fluids are potable water and air.
2. Monitoring well shall be drilled straight and plumb.

B. The CONTRACTOR shall provide water for drilling and grouting and provide certification that the water is from a potable source. Potable water is not available on-site.

3.05 MONITORING WELL CONSTRUCTION

A. The final determination of the screened well will be determined by the ENGINEER.

B. Drill and install 8-inch temporary steel surface casings within overburden. Drill a minimum nominal 6-inch diameter borehole to the required depth.

C. Following construction of the 6-inch diameter borehole, install a 2-inch diameter screen and pipe in the open hole. Screen length shall be 10 feet.

D. Terminate upper end of casing at approximately 2 feet above ground surface.

E. After placement of screen and casing, fill annular space outside of screen with #1 minimum silica sand or other filter pack to be determined by ENGINEER to a depth of 3 feet above the top of the screen.

F. Place 2-foot thick layer of fine sand (#0 or 00) above filter pack layer.

G. Above the layer of fine sand, place a minimum 2-foot thick layer of ¼" Bentonite pellets. Hydrate layer with approved clean water accepted by ENGINEER.

H. Fill the annular space between 2-inch I.D. casing and the native formation above the bentonite seal with grout. Notify the ENGINEER a minimum of 24 hours before grouting wells.

I. Grouting of the annulus shall be completed by placing tremie pipe with a "tee" fitting on the lower end to within 1 foot of the bentonite seal. Grout continuously to ensure entire filling of annular space in one operation. Force grout down tremie pipe under moderate pressure with grout pump and force upward into annular space between casing and surrounding formation. Slowly remove grout tremie pipe as grouting operation progresses with bottom of pipe submerged in grout. Terminate the grout at approximately 6 inches beneath ground surface.

J. Monitoring well shall be completed with a 6-inch steel protective casing with a locking cap. The lock should be installed to face the access road to the well.

K. On the south side of the casing, drill a weep hole in the protective casing and fill the annular space of the protecting casing with bentonite pellets up to the ground surface, and with pea gravel up to 3 inches below the top of the PVC well casing.

L. Install a concrete pad around the well casing.

M. Each monitoring well shall be as-built surveyed in accordance with Section 01050.

N. After completion of well, and after the grout has set for minimum of 24 hours, develop the monitoring well by air-lift and/or submersible pumping in accordance with Article 3.06.

3.06 MONITORING WELL DEVELOPMENT BY AIR-LIFT AND/OR SUBMERSIBLE PUMP

A. Perform development of monitoring well by air-lift and/or submersible pumping after completion of the well construction. Development method must be accepted by ENGINEER.

B. Provide necessary appurtenances for performing monitoring well development.

C. Provide discharge tee or other apparatus to control water removed from monitoring well. Pack around tee and air line to prevent water spray.

D. Provide an air compressor equipped with an oil trap for air-lift surging, if used, that is capable of providing continuous flow of air to pump continuously from monitoring well and place air line pipe in well to an adequate depth to properly develop monitoring well. Pump well until water is clear and relatively free of silt. Surge well by either discharging compressed air in pulses, or if using a submersible pump, with a surge block.

E. Continue development until turbidity, temperature, pH, dissolved oxygen, specific conductance, and eH of pumped water have changed by 10% or less over 3 consecutive readings, spaced 10 minutes apart; or until development is satisfactory to the ENGINEER.

F. Collect, handle and dispose of well development water in accordance with Article 3.08 herein.

3.07 DECONTAMINATION

A. The drill rig and all drilling equipment shall be steam-cleaned upon arrival on-Site and prior to leaving the Site. Potable water for steam cleaning shall be supplied by the CONTRACTOR.

B. Between boreholes, all soil and wastes shall be removed from the drill rig and drilling equipment in accordance with Section 02431.

3.08 HANDLING OF LIQUIDS AND DRILL CUTTINGS

A. All liquids used, collected or encountered during the performance of this Work, including well development water shall be discharged onto the ground surface. The CONTRACTOR shall take precautions to ensure ponded water, erosion, or other damage to existing features does not occur.

B. Decontamination water shall be handled in accordance with Section 02431 of these Specifications.

C. Drill cuttings and other associated waste materials (e.g., excess casing, grout bags) shall be disposed of off-site at the disposal facility accepted for the work of Section 02070.

3.09 WELL PROTECTION

A. During the progress of the Work, the CONTRACTOR shall protect all wells from tampering or the entrance of foreign material.

***** END OF SECTION *****

SECTION 02831

CHAIN-LINK FENCE AND GATES

PART 1 - GENERAL

1.01 DESCRIPTION OF WORK

A. The CONTRACTOR shall furnish all labor, materials, equipment and appurtenances required for the installation of a complete chain-link fence system. Fencing and gates shall be installed in the locations shown on the Contract Drawings and as otherwise required by the CONTRACTOR and favorably reviewed by the ENGINEER.

B. Extension arms and barbed wire are not anticipated at this time but have been included in the Specification for future consideration.

1.02 SUBMITTALS

A. Shop Drawings

1. The CONTRACTOR shall submit to the ENGINEER, at least ten (10) days prior to construction, catalog cuts, manufacturer's installation instructions, and dimensioned drawings for fencing, gates, and associated details for installation.
2. Submit detailed layout drawing showing the location of each fence post.

B. Submit in accordance with Section 01300 of these Specifications.

1.03 DELIVERY AND HANDLING

A. Deliver materials with the manufacturer's tags and labels intact.

B. Handle and store materials in such a manner that will avoid damage.

1.04 QUALITY ASSURANCE

A. Comply with the standards of the Chain-Link Manufacturers Institute and these Specifications.

B. Provide fencing as a complete unit produced by a single manufacturer including the required erection accessories, fittings, and fasteners.

1.05 CODES AND STANDARDS

The latest editions of the publications listed below are included as a part of these Specifications.

A. AMERICAN SOCIETY FOR TESTING AND MATERIALS (ASTM)

A53	Pipe, Steel, Black and Hot-Dipped, Zinc Coated Welded and Seamless
A123/A123M	Zinc (Hot-Dip Galvanized) Coatings on Iron and Steel Products
A153/A153M	Zinc Coating (Hot-Dip) on Iron and Steel Hardware
A392	Zinc-Coated Steel Chain-Link Fence Fabric
A641/A641M,	Zinc-Coated (Galvanized) Carbon Steel Wire

PART 2 - PRODUCTS

2.01 GENERAL

A. Height for new fencing shall be six (6) feet as shown on the Contract Drawings. Posts shall be set at no more than 10-foot centers, in concrete footings, poured the full size of the excavated holes, except for slab-mounted posts, which shall be anchored as shown on the Contract Drawings. Corner posts shall have the necessary strut and tie bracing. Gates shall be provided as specified in Article 2.02G herein and at the locations indicated on the Contract Drawings.

B. Where fencing crosses ditches, steep grades, and other unusual conditions, make special provisions to insure that the security, appearance, maintainability and permanence of the standard fencing are maintained.

C. Slab-mounted fence enclosures shall conform to the material specified in this Section but require alternate installation of the fence posts. For slab-mounted fence enclosures, Articles 3.01A through 3.01C do not apply. The CONTRACTOR shall set the slab-mounted posts using the attachment shown on the Contract Drawings after sufficient curing of the concrete slab has occurred in accordance with Section 03300 of these Specifications. The remaining portion of Article 3.01 still applies.

2.02 MATERIALS AND CONSTRUCTION

A. Fence Mesh and General Note: 9 gauge wire, woven to 2-inch squares, zinc-coated (hot-dip galvanized), galvanized after weaving, 6-foot wide roll. Continuous tension wire shall be provided at the lower and upper edges of the mesh. Fence mesh shall be of one continuous piece from top to bottom and between posts. Zinc-coated fabric shall conform to ASTM A392, Class 2.

B. Line Post: 2-1/2-inch O.D. ASTM A53 standard weight Galvanized Pipe (3.65#/ft.)

C. Corner Post: 3-inch O.D. ASTM A53 standard weight Galvanized Pipe (5.79#/ft.)

D. Gate Post: 4-inch O.D. ASTM A53 standard weight Galvanized Pipe (9.11#/ft.)

E. Top Rail: 1-5/8-inch O.D. ASTM A53 standard weight Galvanized Pipe (2.27#/ft.) with extra long pressed steel sleeves.

F. Tension Wire: No. 7 gauge steel spring coil tension wire, zinc-coated (hot-dip galvanized). Zinc-coated wire shall conform to ASTM A641, Class 3.

G. Swing Gates:

1. Frame shall be 2-inch O.D. ASTM A53 standard weight galvanized pipe with galvanized pressed steel or galvanized malleable iron corner ells riveted or bolted at corners.
2. Internal bracing shall be NPS 1 ASTM A53 standard weight galvanized pipe with 3/8-diameter galvanized adjustable truss rods and truss fasteners.
3. Bottom hinge shall be galvanized malleable iron pivot type.
4. Top hinge shall allow gate to swing 90° to 180°.
5. Gate shall be complete with padlocking device, center rest, and semi-automatic catch to secure gate in open position.
6. Gates shall be provided to match fence height and with the following minimum widths:

    a. Extraction Well Enclosures: Provide dual gates of equal width to provide an overall gate width of 6 feet.
    b. Passive Gas Vent Enclosures: Provide a single gate of 3 foot width.
    c. Mangates: Provide a single gate of 3 feet width.
    d. Vehicular Gates: Provide dual gates of equal width to provide an overall gate width of 16 feet.

H. Hardware, fasteners, and accessories: galvanized and compatible with other fence system components.

I. Brace rail: ASTM A53 standard weight galvanized pipe with 3/8-inch diameter galvanized steel truss rods and truss tighteners.

J. Lifting Eyes: Provide at each end of removable panels of adequate strength and attachment to allow fence panel removal. Provide galvanized steel or stainless steel. Repair damage to galvanized surfaces with Galv-Alloy or other means.

K. Extension Arms (if required):

1. Line Post arms shall be fabricated of pressed steel or malleable iron base with pressed steel extension riveted on.
2. Corner Posts arms shall be fabricated of 11-gauge (minimum) pressed steel or heavy malleable iron base with 11-gauge (minimum) pressed steel extension riveted on.
3. Arms shall be galvanized in accordance with ASTM A123.
4. Arms shall be able to withstand a minimum pull down weight of 300 pounds and of the barbed wire stretched to proper tension.
5. Arms shall be securely fastened to post.

L. Tension Bars and Bands: Tension bars for pulling fence fabric to terminal posts shall be 3/4-inch steel bars, hot-dip galvanized in accordance with ASTM A123. Bands for fastening tension bars to terminal posts shall be 11 gauge by 1-inch wide steel; hot-dip galvanized in accordance with ASTM A123.

M. Barbed Wire (if required): Provide galvanized barbed or razor wire with barbs/razors spaced not more than 10 inches apart.

PART 3 - EXECUTION

3.01 INSTALLATION

A. Excavation: Augering holes for post footings.

1. Auger holes to the depths indicated on the Contract Drawings. If solid rock is encountered near the surface, drill into rock at least 12-inches for line posts and at least 18-inches for end, pull corner, and gate posts. Drill hole at least 1-inch greater diameter than the largest dimension for the post to be placed. If solid rock is below soil overburden, drill to full depth required. Penetration into rock need not exceed the minimum depths specified above.
2. All post hole soil cuttings shall be cleaned up, spread, and covered with seeded topsoil.
3. All health and safety precautions shall be followed during posthole excavation, fence post placement, and posthole backfilling.

B. Setting Posts: Remove loose and foreign materials from sides and bottoms of holes and moisten soil prior to placing concrete.

1. Center and align posts in holes 12 inches above bottom of excavation.
2. Place concrete around posts in a continuous pour and vibrate or tamp for consolidation. Check each post for horizontal alignment and plumb and hold in position during placement and finishing operations.
3. Trowel finish tops of footings and slope or dome to direct water away from posts. Concrete top to be a minimum of 1-inch above the finished grade. Extend footings for gateposts to the underside of bottom hinge. Set keeps, stops, sleeves and other accessories into concrete as required.
4. Keep exposed concrete surfaces moist for at least seven (7) days after placement or cure with membrane curing materials or other acceptable curing methods.

C. Concrete Strength: Concrete for setting of fence posts shall have a minimum 28-day compressive strength of 3000 psi. Allow concrete to attain at least 75 percent of its minimum 28-day compressive strength, but in no case sooner than seven days after placement, before rails, tension wires, barbed wire or fabric is installed. CONTRACTOR may propose use of high early strength concrete (Type III) for approval by the ENGINEER. Do not stretch and tension fabric and wires and do not hang gates until the concrete has attained its full design strength.

D. Top and Bottom Rails: Run top rail continuously through post caps or extension arms, bending to radius for curved runs. Provide one expansion coupling in every five with 6-inch sleeve to take up expansion and contraction. Top and bottom rails required for removable fence sections, and only top rails required for non-removable fencing.

E. Brace Assemblies: Install braces so posts are plumb when diagonal rod is under proper tension. Bracing shall be installed midway between top rail and ground from each corner post to first line post. Braces shall be securely fastened to posts by heavy galvanized pressed steel connections. Braces shall be trussed from line post back to corner post with 3/8-inch diameter galvanized steel rods.

F. Tension Wire: Install tension wires by weaving through the fabric and tying to securing the wire to the fabric with No. 1 gauge galvanized hog rings on 24-inch centers.

G. Fabric: Pull fabric taut and tie to posts, rails and tension wires. Install fabric on security side of fence and anchor to framework so that fabric remains in tension after pulling force is released. Fabric shall be fastened to top rail with No. 9 gauge aluminum tie wires on 24-inch centers. Fabric shall be fastened to line posts with No. 6 gauge galvanized clips on 14-inch centers or No. 9 gauge galvanized wire on 12-inch centers. Bottom of fabric shall be set at top of concrete.

H. Tension Bars: Tension bars shall be fastened to corner posts with No. 11 gauge by 1-inch wide galvanized tension bands and 3/8-inch diameter galvanized carriage bolts on approximately 14-inch centers.

I. Repair damaged coatings in the shop or during field erection by recoating with Manufacturer's recommended repair compound, applied per Manufacturer's directions.

J. Stretcher Bars: Thread through or clamp to fabric 4-inches on center and secure to posts with metal bands spaced 15-inches on center.

K. Tie Wires: Use U-shaped wire appropriate for the diameter of pipe. Attach pipe and fabric firmly with tie wire ends twisted at least two full turns. Bend ends of wire to minimize hazard to persons or clothing.

L. Fasteners: Install nuts for tension band and hardware bolts on side of fence opposite fabric side. Peen ends of bolts or score threads to prevent removal of nuts.

M. Fencing: Fencing shall essentially follow the contour of the natural grade or concrete slab, as appropriate. Fences in which contour of the natural grade results in a space of 6 inches or more between bottom of chain link fabric and ground surface shall be handled as follows if so directed by the ENGINEER:

1. Intermediate posts shall be set at low point.
2. Tightly stretched barbed wire shall be used to close space between bottom of chain link fence and ground.
3. Sufficient strands of barbed wire shall be provided to limit clear opening above ground and between strands to 3 inches.

N. Barbed Wire: If required, install barbed/razor wire taunt and in three (3) paralleling rows along the extension arms.

O. Gate Hinges: Gate hinges shall be tack welded to the gate posts to prevent slippage. The gate hinge bolts shall be retightened after 30 days.

3.03 CLEANING

A. Perform cleaning during installation of the Work and upon completion of the Work. Remove from the Site all fence debris and equipment. Repair all damage resulting from the installation of the chain-link fence system as directed by the ENGINEER or QUALITY ASSURANCE OFFICIAL, at the CONTRACTOR's expense.

*****END OF SECTION*****

SECTION 02910

MODIFICATION OF EXISTING WELLS

PART 1 - GENERAL

1.01 The Contractor shall furnish all labor, equipment, and materials to modify existing monitoring wells. Addition of fill and RCRA cap material and grading in areas where existing monitoring wells are located will necessitate the extension of well casing, internal tubing, piping, and signal wires, and protective casing to an elevation above the final surface grade. These wells are part of a monitoring system network and or the MPA Ground Water Remedy System, which will continue to be used after all excavation, grading, and cap activities are completed.

1.02 The Contractor shall make the necessary modifications to all wells impacted by construction activities. The locations for these wells are shown on the drawings.

1.03 QUALITY CONTROL. The Contractor shall establish and maintain quality control for all modifications made to existing wells to assure compliance with contract requirements. The Contractor shall maintain records of his quality control for all operations.

1.04 DOCUMENTATION. For each monitoring well modified the documents outlined below shall be completed.

1.05 WELL MODIFICATION PLAN. Prior to any well modification, the Contractor shall submit a well modification to the ENGINEER for approval. This plan shall outline the procedures to be used when modifying existing wells.

1.06 REVISED INSTALLATION DIAGRAM. An installation diagram shall be completed for each well modified and shall include as-built information and new modifications. Submission of the diagram shall submitted within 10 working days of the completion of the well. The diagram shall illustrate the as-built condition of the well, and include, but not be limited to, the following items:

A. Name of the project and site
B. Well identification number.
C. Date(s) of original well installation and modification.
D. Description of material from which the well is constructed prior to the modification and material used to modify the well.
E. Elevations of key features of the well, such as top of well casing, top and bottom of protective casing, ground surface, prior to and after the well modification.
F. Well location by project coordinates. A plan sheet shall also be included showing the coordinate system used and the location of the well.
G. Total depth of the well prior to and after the well modification.
H. Static water level of the well prior to and after the well modification

PART 2 - PRODUCTS

2.01 WELL CASING. Piping material used in modification of wells shall be schedule 40 PVC pipe, of the matching outside diameter. Furnco Boot fittings shall be utilized on wells with steel well casings. The exact length of PVC riser to add may vary, but the modified top of casing shall be 2 to 3 feet above final grade. Existing well head manifolds shall be reused in the extension of all wells. Pipe shall meet the requirements specified in ASTM D 1785, and shall also conform to the requirements stated for potable water applications in NSF Standard 14.

2.02 PROTECTIVE COVERS. Lockable protective casings for existing wells shall be removed, cleaned and reused in extension of existing monitoring wells. Care shall be taken not to damage the well or protective covers. Protective casings damaged in removal shall be replaced with identical protective casings.

2.03 BENTONITE SEAL. Bentonite pellets used to create a seal around the extended well shall be a commercially available product designed for well sealing purposes.

PART 3 - EXECUTION

3.01 MODIFICATION OF GROUNDWATER WELLS. The protective casing shall be removed and cleaned for later reuse. The well casing shall be extended such that the final elevation of the top of casing is 2 to 3 feet above final grade (to be determined by survey prior to construction).

3.02 TEMPORARY STEEL CASING. A temporary 10 inch diameter steel casing shall be installed over the extended well for protection during filling and grading. During installation of the temporary steel casing, the top shall be held plum while the bottom is centered around the existing well and anchored in place by mounding and compacting soil around the base. A sufficient mound of soil shall be placed around the steel casing so that it will remain stable during filling and grading. The height and width of the initial mound shall be adequate to support the height of casing standing above grade without movement.

3.3. FILLING AROUND THE TEMPORARY CASING. The mound of fill placed to stabilize the temporary 10" diameter casing, and all subsequent filling in close proximity to the well shall utilize hand compaction equipment such as jumping jacks, with soil fill placed in lifts of not more than 8 inches loose thickness and compacted Material for use as fill around the temporary steel casing shall conform to the requirements of STRUCTURAL FILL as outlined in Section 02223 Fill and Backfill. In no case shall large compaction and grading equipment be allowed to operate within 3 feet of the wells. Placement of soil fill around the well shall be done in such a way as to maintain the vertical position of the temporary 10 inch steel casing without displacement or damage to the well. Once the initial mound of fill has been placed, all subsequent filling shall be performed contemporaneously with filling and grading outside of the 3 foot hand compaction zone.

3.4. COMPLETION OF WELL EXTENSION. Upon completion of the filling and grading to the subgrade elevation of the liner, the annulus between the well casing and the 10 inch

diameter casing shall be filled with bentonite pellets or chips (placed in lifts) to create a seal around the well casing. Approximately 5 gallons of water total from an approved source shall be poured into the annulus to ensure that the pellets hydrate. Water shall be added after every two linear feet of bentonite is placed. The volume and the elevation of the bentonite seal shall be measured and recorded on the well completion diagram. The temporary casing may be pulled after placement of the bentonite seal. If not pulled, the 10 inch temporary casing shall be cut off at 2.5 feet below finished grade to accommodate reinstallation of the outer protective casing with locking cover. The top of the flange on the protective casing shall be installed above the top of the wellhead manifold. The other protective casing shall be booted to the cap liner as shown on the Contract Documents. The pad around the well shall then be reconstructed to approximately 3' x 3' square with gravel placed to 4" thick. The flush vault associated with GW-06, shall be completed similar to the stick up wells.

3.5. GW-06. This flush mounted wells shall be extended in a similar manner as wells mentioned above. A concrete pad shall be installed instead of the gravel pad, to secure vault.

3.6. WELL IDENTIFICATION. Well identification numbers are stamped on the top of the protective covers. These shall be reused in the extension of the wells.

3.7. SURVEYS. All topographic survey efforts conducted under contract shall be certified by a surveyor with a current surveyor's license in the project state. The well shall be locationally surveyed to determine its map coordinates referenced to the state coordinate system. All measurements shall have an accuracy of within ± 1 foot of the project coordinate system. Elevations for the natural ground surface and a designated point on the uncapped well (top of inner casing (where present) - not protective casing) shall be surveyed to within ± 0.01 foot referenced to the project vertical control system.

1.8. DECONTAMINATION. All support equipment brought to the site shall be in operable condition and free of leaks in the hydraulic, lubrication, fuel, and other fluid systems that could be detrimental to the project effort. All casing shall be either clean and wrapped in the original manufactures packaging or steam cleaned immediately prior to installation. Care shall be taken to ensure that the pipe does not contact the ground or other potentially contaminated surface. Decontamination shall be performed at a central decontamination station already established on site. Waste solids and water from the cleaning/decontamination process shall be properly collected and disposed. All equipment shall be decontaminated prior to being brought into the site and before it is removed from the project site.

*****END OF SECTION*****

SECTION 02936

SEEDING

PART 1 - GENERAL

1.01 DESCRIPTION OF WORK

A. Seeding includes all areas to receive a grass lining in addition to any other areas disturbed during or as part of construction activities, as directed by the ENGINEER.

B. The CONTRACTOR shall furnish all labor, materials, equipment, tools, and appurtenances required to complete the seeding of all areas disturbed, regraded or receiving a cover during the course of construction. This work shall include the maintenance of established lawns until the final acceptance. The CONTRACTOR shall be expected to provide and place all materials necessary to complete the Work.

C. Apply lime, fertilizer, seed and seed mulch to all areas disturbed by the Work not receiving a specific surfacing.

D. The CONTRACTOR is responsible to protect all work specified in this section for a period up to one year. Should revegetation of disturbed areas not become fully established, the CONTRACTOR is required to repair damages and fully establish vegetation at the CONTRACTOR'S expense as per item 3.04 below.

E. The CONTRACTOR shall comply with all applicable codes, ordinances, rules, regulations and laws of local, municipal, State or Federal authorities having jurisdiction.

1.02 SUBMITTALS

A. A manufacturer's Certificate of Compliance for the seed mixture shall be submitted by the manufacturer with each shipment of each type of seed. These certificates shall include the guaranteed percentages of purity, weed content and germination of the seed, net weight, and the date of shipment. No seed may be sown until the CONTRACTOR has submitted these certificates.

B. The CONTRACTOR shall provide analysis of soil suitability to sustain vegetation. Analyze to ascertain percentage of nitrogen, phosphorus, potash, soluble salt content, organic matter content, and pH value by performing Baker or LaMotte Test.

C. The CONTRATCOR shall provide full and written maintenance instructions for proper care and development of seeded areas to the ENGINEER prior to substantial completion.

D. The CONTRACTOR shall submit hydroseed procedures and application rates for approval by the ENGINEER.

1.03 QUALITY CONTROL

A. A satisfactory stand of grass, as determined by the ENGINEER shall be required. To be acceptable, bare spots shall be scattered, there shall be no bare spots larger than one square yard, and the stand of grass shall consist of a uniform stand of at least 80% established permanent grass species within one year of initial seeding.

B. Maintain erosion and sediment controls in accordance with Section 02125 of these Specifications.

C. The CONTRACTOR shall submit to the ENGINEER evidence of compliance with the testing specified in Article 1.02 at least seven (7) days prior to placement.

1.04 DEFINITIONS

A. Weeds include, but are not limited to, Dandelion, Jimsonweed, Quackgrass, Horsetail, Morning Glory, Rush Grass, Mustard, Lambsquarter, Chickweed, Cress, Crabgrass, Canadian Thistle, Nutgrass, Poison Oak, Blackberry, Tansy Ragwort, Bermuda Grass, Johnson Grass, Poison Ivy, Nut Sedge, Nimble Will, Bindweed, Bent Grass, Wild Garlic, Perennial Sorrel, and Broome Grass.

PART 2 - PRODUCTS

2.01 SEED MIXTURES FOR TEMPORARY AND PERMANENT COVER

A. Seed shall be brought on site unmixed unless the mixture is certified and stated on the package as to the quality and mixture. Mixing shall be done at the project site from the original unopened packages. Seed mixtures and application rates shall be as follows:

Scientific Name Common Name	Percentage of Mixture	Application Rate (lbs per acre)
Poa Pratensis, Eclipse Kentucky Bluegrass	452% of Mixture	120
Festuca Rubra, var., Creeping Red Fescue	30% of Mixture	
Lolium perenne, Perennial Ryegrass	18% of Mixture	

B. The specified application rates are minimum values set forth in accordance with the Standards for Erosion and Sediment Control in Pennsylvania (E&S Manual, April 1987). The CONTRACTOR may elect to apply the specified seed mixtures more densely in order to meet the requirements of Article 1.03A herein.

C. The OWNER, through the ENGINEER and/or ENGINEER, reserves the right to change the seed mixture and recommended seeding dates based upon the time of year in which the construction is performed (i.e., winter rye).

2.02 SCHEDULING

A. Schedule planting of seeding areas for optimum germination as follows:

1. Spring planting schedule is April 1st to June 30th.
2. Fall planting schedule is August 15th to September 30th.

B. Seeding dates other than listed above are to be approved by the ENGINEER.

C. If the planting of seeding areas falls outside of the scheduled dates, additional seeding and measures shall be required.

2.03 FERTILIZER

A. The fertilizer shall be a commercial grade fertilizer based on fertility tests results of the cap repair material.

2.04 MULCH

A. Straw mulch shall be oat or wheat straw, free from weeds, foreign matter detrimental to plant life, and dry. Hay or chopped cornstalks are not acceptable. Straw mulch shall be properly anchored.

B. Wood fiber mulch shall consist of wood fiber produced from clean, whole uncooked wood, formed into resilient bundles having a high degree of internal friction and shall be dry when delivered to the Site.

2.05 WATER

A. Water shall be clean, fresh, potable, and free of substances or matter that could inhibit vigorous growth of grass.

2.06 LIME

A. Agricultural grade lime shall be applied at a rate of 2 tons per acre.

PART 3 - EXECUTION

3.01 INSPECTION

A. The CONTRACTOR shall verify that the prepared vegetative layer is ready to receive the Work of this Section.

3.02 DELIVERY, STORAGE, AND HANDLING

A. The CONTRACTOR shall deliver grass seed mixture in sealed containers showing weight, seed mix, year of production, date of packaging, and location of packaging. Seed in damaged or old packaging shall not be acceptable.

B. The CONTRACTOR shall deliver fertilizer in waterproof bags showing weight, chemical analysis, and name of manufacturer. Fertilizer in damaged or old packaging is not acceptable.

3.03 LIMING

A. When required, ground limestone that has been protected from moisture, and is dry and free flowing, shall be evenly spread over the area to be seeded at a rate that will produce a minimum soil pH value of the soil of 6.5 to 7.0. The maximum application rate allowed is 100 lbs. per 1,000 square feet.

B. The CONTRACTOR shall work lime into vegetative layer to a depth of 4 inches with a disc, spring-tooth harrow, or other suitable equipment.

3.04 FERTILIZING

A. The CONTRACTOR shall apply fertilizer in accordance with manufacturer's instructions.

B. The CONTRACTOR shall apply fertilizer after smoothing of the vegetative layer and prior to roller compaction.

C. The CONTRACTOR shall not apply fertilizer at the same time or with the same machine as that will be used to apply seed unless hydroseeding.

D. The CONTRACTOR shall mix fertilizer thoroughly into upper 4 inches of the vegetative layer with a disc, spring-tooth harrow, or other suitable equipment.

E. The CONTRACTOR shall lightly water ground surface to aid the dissipation of fertilizer.

3.05 SEEDING

A. Areas to be seeded shall be made friable and receptive to seeding prior to seeding. Stockpiles to receive seeding may be seeded immediately after stockpiling is completed provided the seed bed is not muddy or hard. Under no circumstances will seeding be permitted in muddy, hard, or crusted soils.

B. The CONTRACTOR shall apply seed at the rates the shown in PART 2 of this Section or as recommended by the Commonwealth of Pennsylvania Department of Environmental Protection. Seed evenly in two intersecting directions. Rake in lightly. Do not seed area in excess of that which can be mulched on same day.

C. Planting season shall be as indicated in PART 2 herein or as recommended by the Commonwealth of Pennsylvania Department of Environmental Protection.

D. The CONTRACTOR shall not sow immediately following rain, when ground is too dry, frozen, or during windy periods.

E. The CONTRACTOR shall keep all equipment, vehicular, and pedestrian traffic off areas that have been seeded to prevent excessive compaction and damage to

young plants. Where such compaction has occurred, the CONTRACTOR shall rework the soil to make a suitable seedbed, then reseed and reblanket such areas with the full amounts of the specified materials at no additional cost to the OWNER.

3.06 MULCHING

A. Hydromulching of seeding areas shall have approved mulch applied at a rate as recommended by the manufacturer for tacking agent.

B. Other methods of mulching shall not be applied to approval by the ENGINEER.

C. Wood fiber mulch shall be applied to seeded area at a rate of 1,500 pounds per acre. Immediately before spraying, the mulching material shall be mixed with water in the sprayer and kept uniformly suspended in the water by agitation during the spraying operation.

3.07 HYDROSEEDING

A. This method is best for steep, inaccessible areas. When applying seeds, lime, fertilizer, or mulch materials with hydroseeders, do not use more than 100 to 150 pounds of solids per 100 gallons of water. If inoculate is in a seed, fertilizer, and lime slurry, it should be used within three to four hours, or a fresh supply of inoculate should be added. It is preferable to hydroseed when the soil is moist.

B. If seeding is performed by hydromulching, then specified seed mixtures shall be increased by 10 percent.

3.08 RESEEDING

A. Within one (1) year of initial seeding, the CONTRACTOR shall cut the first growth at the CONTRACTOR's expense.

B. Where vegetative coverage is less than 80% with one year of initial seeding, the CONTRACTOR shall place additional seed in accordance with Articles 3.05 or 3.07 herein, at no additional cost to OWNER.

C. The CONTRACTOR shall be required to replant areas damaged by water, wind, fire, equipment, or pedestrian traffic, as necessary, or when ordered by the ENGINEER, at no additional cost to the OWNER.

*****END OF SECTION*****

DIVISION 3

SECTION 03100

CONCRETE FORMWORK

PART 1 - GENERAL

1.01 DESCRIPTION OF WORK

A. CONTRACTOR shall furnish and install concrete formwork as required by the concrete outlines shown and indicated on the Contract Drawings and as specified herein.

B. CONTRACTOR shall furnish all materials, labor, tools and appurtenances required to complete the work as described below. CONTRACTOR shall provide a "Competent Person" to implement, supervise, and inspect all Work.

C. CONTRACTOR shall comply with applicable codes, ordinances, rules, regulations and laws of local, municipal, state or federal authorities having jurisdiction.

1.02 RELATED SECTIONS

A. Concrete Reinforcement – Section 03200

B. Concrete – Section 03300

1.03 RELATED REFERENCES

The latest edition of the publications listed below is included as a part of these Specifications.

A. ACI 318 Building Code Requirements for Reinforced Concrete

B. ACI 347 Recommended Practice for Concrete Formwork

C. US Department of Commerce Product Standard (PS) PS 1 – Construction and Industrial Plywood

1.04 FORM DESIGN

A. The design of forms and their performance, as required by this Section, is the CONTRACTOR's responsibility. Formwork shall comply with ANSI A10.9 and OSHA Construction Standards, Part 1926, Subpart Q, Concrete, Concrete Forms, and Shoring.

PART 2 - PRODUCTS

2.01 FORM MATERIAL

A. Formwork for all concrete, unless otherwise specified, shall not be less than 5/8-inch, 5-ply Douglas fir plywood of exterior structural grade especially

processed to resist moisture and conforming to PS 1, B-B Concrete Form Panels. Patented forms may be used, subject to approval by the ENGINEER, provided they are in new, or like-new condition so as to produce a smooth, even surface free from blemishes, defects, and depressions; this approval is for the finish these forms will leave on the contact surfaces and will not relieve the CONTRACTOR of the responsibility for the design and structural soundness of the forms.

2.02 ACCESSORIES

A. Form tie assemblies shall be form clamps with smooth tie rods, with a waterstop at the center, permitting tightening of the forms and be of such type as to leave no metal or other material within 1-1/2-inch of the surface after use. The assembly should provide cone-shaped depressions at the forms, at the surface at least 1-inch in diameter and 1-1/2-inch deep to allow filling and patching.

B. Form releasing agent shall be a non-staining form coating compound such as "Cast-Off" by Sonneborn Products Division (Contech, Inc.), or an equal product as approved by the ENGINEER.

PART 3 - EXECUTION

3.01 FORM CONSTRUCTION

A. Formwork shall be in accordance with ACI 347 and as follows:

1. Forms shall conform to shape, lines and dimensions of members required and shall be sufficiently rigid and tight to prevent leakage of mortar. Forms shall be properly braced or tied together so as to maintain position and shape. Construct forms so that they can be removed readily without hammering or prying against the concrete. Forms for exposed concrete shall be carefully made and accurately placed to obtain correct shape and lines.
2. Joints shall be butted tight on solid bearings. Arrangements of panels shall be orderly and symmetrical; and use of small pieces shall be avoided. Forms shall be chamfered for external corners of concrete, including top of walls, which will be exposed in the finished work.
3. CONTRACTOR shall be fully responsible for adequacy of formwork in its entirety. Forms shall support loads they will be required to sustain and shall maintain their dimensional and surface correctness to produce members with the required geometry.
4. Box-outs for slots, chases, recesses or other openings shall be provided by the CONTRACTOR as needed by the work of this and any other trades.
5. Install all the inserts to be supported by the formwork as required by the work of this and other trades as needed.

3.02 TOLERANCE FOR FORMED SURFACES

A. Variation from Plumb: Not more than ±1/4 inch in any 10 feet of length with a maximum for the entire length of ±1/2 inch.

B. Variation from the Level or from the Grades: Not more than ±1/4 inch in any 10 feet of length with a maximum for the entire length of ± 3/4 inch.

C. Variation in the Sizes and Location of Openings and thickness of walls: ±1/4-inch.

3.03 INSPECTION

A. CONTRACTOR shall give the ENGINEER at least 48 hours notice before any concrete is to be cast. Concrete shall not be cast until the ENGINEER has observed and given approval of the work to be cast including, but not limited to, the placement of all the reinforcing, accessories, forms and the surfaces to be cast against. Such observations are in the nature of assisting the CONTRACTOR to minimize errors and in no case will they serve to relieve the CONTRACTOR of the responsibility to provide the materials and workmanship required by the Contract Documents.

3.04 APPLICATION OF FORM COATING

A. Immediately before the placing of reinforcing, faces of all forms in contact with the concrete shall receive a thorough coating of the liquid form-releasing agent specified, applied in compliance with the Manufacturer's instructions.

3.05 REMOVAL OF FORMS

A. CONTRACTOR shall assume full responsibility for removal of formwork and forms shall be removed in such a manner as to insure complete integrity and safety of the structure. Bottom forms or weight bearing formwork and shoring shall remain in place a minimum period of 7 days after placement of the concrete, or CONTRACTOR has demonstrate that the concrete has reached 70% of its design strength. Non supporting formwork shall remain in place a minimum of 24 hours after the implementation of a curing.

B. Wood forms shall be completely removed from all the work to avoid termite infestation.

****END OF SECTION****

SECTION 03200

CONCRETE REINFORCEMENT

PART 1 - GENERAL

1.01 DESCRIPTION OF WORK

A. CONTRACTOR shall furnish and install the concrete reinforcement as shown and indicated on the Drawings, as required by these Specifications, and as specified in this Section. CONTRACTOR shall provide a "Competent Person" to implement, supervise and inspect all Work.

B. CONTRACTOR shall comply with applicable codes, ordinances, rules, regulations and laws of local, municipal, state or federal authorities having jurisdiction.

1.02 RELATED SECTIONS

A. Concrete Formwork – Section 03100

B. Concrete – Section 03300

1.03 REFERENCED PUBLICATIONS

The latest edition of the publications listed below are included as part of these Specifications.

A.	ACI 318	Building Code Requirements for Reinforced Concrete
B.	ACI 315	Manual of Standard Practice for Detailing Reinforced Concrete Structures
C.	ASTM A82	Specification for Cold Drawn Steel Wire for Concrete Reinforcement
D.	ASTM A185	Specification for Welded Steel Wire Fabric for Concrete Reinforcement
E.	ASTM A496	Deformed Steel Wire for Concrete Reinforcement
F.	ASTM A497	Welded Deformed Steel Wire Fabric for Concrete Reinforcement
G.	ASTM A615	Specification for Deformed and Billet-Steel Bars for Concrete Reinforcement

1.04 SUBMITTALS

A. Shop Drawings to be submitted with the CONTRACTOR's Detailed Design submittal. Shop drawings shall show the required bar sizes, spacing, and splice length for all reinforcement; reinforcement placing plans; and, bending details and complete bar lists. Shop drawings will not be reviewed without such information. Wall reinforcing shall be shown in elevation. Location and arrangement of accessories shall be clearly indicated. Placing drawings, detail drawings and bar lists shall be checked by the fabricator and the CONTRACTOR before being submitted to the ENGINEER for review.

B. Mill tests of reinforcing steel shall be submitted prior to use for each 15 tons or less shipped to the Site. Tests shall be conducted in conformance with ASTM A615, and methods prescribed therein.

1. Cost of tests shall be borne by the CONTRACTOR.
2. Three copies of each test report stating whether the material meets the requirements of the ASTM specifications shall be submitted to the ENGINEER.
3. Certified copies of the mill tests may be considered evidence of compliance provided such tests are regularly conducted by the reinforcement supplier by experienced, competent personnel using appropriate testing equipment. In case of doubt as to the adequacy or accuracy of the mill tests, the ENGINEER may require the CONTRACTOR to furnish, at no additional cost to the CSDG, test results from an independent testing laboratory acceptable to the ENGINEER on mill samples or delivered steel reinforcement.

PART 2 - PRODUCTS

2.01 REINFORCING BARS

A. Bar reinforcement shall be deformed-type bars conforming to ASTM A615. Reinforcement shall be manufactured from new billet steel of American manufacture, Grade 60, yield strength 60,000 psi minimum.

2.02 WELDED WIRE FABRIC

A. Welded wire fabric shall be in flat sheets conforming to ASTM A185 (A497), with wire conforming to ASTM A82 (A496).

2.03 ACCESSORIES

A. All chairs and bolsters shall have plastic-covered or galvanized steel legs.

B. For slabs on grade, all reinforcing shall be supported on continuous chairs and/or bolsters as required to properly support the reinforcing steel. The chairs and/or bolsters shall be supported on precast concrete pads bearing on the subgrade. The concrete pads shall be at least 6-inch x 6-inch and no more than 1-inch thick.

Pads shall be cast from Class "A" concrete or from mortar made up of one part cement and two parts sand, with tie wires embedded.

PART 3 - EXECUTION

3.01 STORAGE OF MATERIALS

A. Reinforcing steel delivered to the Site shall be stored on clean well draining flat surface. All reinforcing steel shall be stored in bundles with tags. Reinforcing steel shall not be exposed to the elements for more than 30 days to limit rust formation.

3.02 INSPECTION OF STEEL PLACEMENT

A. CONTRACTOR shall give the ENGINEER at least 48 hours notice before any concrete is to be cast. Concrete shall not be cast until the ENGINEER has observed and given approval of the work to be cast including, but not limited to, the placement of all the reinforcing, accessories, forms and the surfaces to be cast against. Such observations are in the nature of assisting the CONTRACTOR to minimize errors and in no case will they serve to relieve the CONTRACTOR of the responsibility to provide the materials and workmanship required by the Contract Documents.

3.03 TOLERANCES

A. Allowable tolerances for fabricating steel reinforcement shall be as follows:

Item	Maximum Tolerance
Sheared length of bars	± 1-inch
Location of bends	± 1-inch

B. Allowable tolerances for placing steel reinforcement shall be as follows:

Item	Maximum Tolerance
Concrete cover from outside of bar to finished surface	+ 1/4-inch
Lateral spacing of bars in plane of reinforcement in slabs and walls	± 1-inch
Height of bottom bars in slabs	± 1/4-inch
Height of top bars in slabs	± 1/4-inch

3.04 SHOP FABRICATION

A. Reinforcing steel shall be fabricated to required shapes and dimensions in compliance with applicable provisions of ACI 315 and ACI 318.

B. Bars shall be bent cold. Bars shall be prefabricated to detail and delivered to the site plainly tagged and ready to set.

3.05 FIELD FABRICATION

A. Field fabrication of reinforcing steel will not be permitted without the approval of the ENGINEER.

B. Field cutting of reinforcing steel shall be performed by shearing or abrasive cutting wheel. Cutting by flame is prohibited.

3.06 PLACEMENT AND ANCHORAGE

A. Space metal chairs, bolsters, spacers and hangers in accordance with ACI 315.

B. Reinforcement, at the time concrete is placed, shall be free from rust scale or other coatings that will destroy or reduce bond. Bars with kinks or bends not shown on the plans shall not be used. A thin coating of firmly attached rust shall not be cause for rejection.

C. Reinforcement shall be accurately placed in accordance with the shop drawings and shall be adequately secured in position with not less than 16-gauge annealed wire or suitable clips at no less than 50% of the bar intersections. Reinforcement shall be held securely at the required distance from the forms. Nails shall not be driven into outside forms to support reinforcement.

D. Install welded wire fabric reinforcement for concrete sidewalks, equipment pads, and as otherwise indicated. Lap all joints 6-inches and wire securely. Extend mesh to within 2-inches of sides and ends of slabs. Unless otherwise specified, place welded wire fabric between the upper third-point and the mid-point of the slab. Sheets that do not lay flat when in their intended position will be rejected. Tags designating the wire size and spacing shall be left on each sheet until ready for use. Tuck ends of welded mesh well down into edge of beams or walls. Do not leave unreinforced border strips. Welded wire fabric shall not contain loose rust.

3.07 CONCRETE COVER

A. Metal reinforcement shall be protected by concrete cover in accordance with ACI 318.

3.08 SPLICING

A. Splices shall be Class "C" splice minimum. The location and type of splices desired by the CONTRACTOR must be specifically requested and must meet the approval of the ENGINEER before they can be used.

B. Splices shall not be made at point of maximum stress and shall provide sufficient lap to transfer stress between bars by bond.

C. Splices in top reinforcement shall be made as shown of the reinforcement drawing and approved by the ENGINEER.

D. Mechanical splices may be used instead of lap splices provided that their location and type meets with the approval of the ENGINEER.

E. Splice locations shall be staggered with adjacent bars and bar bundles.

****END OF SECTION****

SECTION 03300

CONCRETE

PART 1 - GENERAL

1.01 DESCRIPTION OF WORK

A. The CONTRACTOR shall furnish and install cast-in-place concrete as shown and indicated on the Contract Drawings, specified in this Section, and as otherwise required to complete the Work.

B. The CONTRACTOR shall comply with applicable codes, ordinances, rules, regulations, and laws of local, municipal, Commonwealth or Federal authorities having jurisdiction. The CONTRACTOR shall provide a "Competent Person" to implement, supervise, and inspect all Work.

1.02 RELATED SECTIONS

A. Materials Testing Laboratory - Section 01410

B. Concrete Formwork - Section 03100

C. Concrete Reinforcement - Section 03200

1.03 REFERENCED PUBLICATIONS

The latest edition of the publications listed below form a part of these Specifications:

A. American Concrete Institute (ACI) Publications

211.1	Standard Practice for Selecting Proportions for Normal, Heavyweight, and Mass Concrete
301	Specifications for Structural Concrete for Buildings
302.1R	Guide for Concrete Floor and Slab Construction
304	Recommended Practice for Measuring, Mixing, Transporting, and Placing Concrete
305R	Hot Weather Concreting
306R	Cold Weather Concreting
318	Building Code Requirements for Reinforced Concrete

B. U.S. Army Corps of Engineers (COE) Waterways Experiment Station Publications

CRD-C-572	Specifications for Polyvinyl Chloride Waterstops
CRD-C-621	Handbook for Concrete and Cement, Specifications for Non-shrink Grout, Volume II

C. American Association of State Highway and Transportation Officials (AASHTO) Publication

M 182 Burlap Cloth Made From Jute or Kenaf

D. Commonwealth of Pennsylvania; Department of Transportation

Publication 408	Specifications – Latest Edition
Publication 35	Bulletin No. 15 – Approved Construction Materials
Publication 72	Standards for Roadway Construction

E. American Society for Testing and Materials (ASTM) Publications

C 31	Making and Curing Concrete Test Specimens in the Field
C 33	Concrete Aggregates
C 39	Compressive Strength of Cylindrical Concrete Specimens
C 42	Obtaining and Testing Drilled Cores and Sawed Beams of Concrete
C 94	Ready-Mixed Concrete
C 143	Slump of Portland Cement Concrete
C 150	Portland Cement
C 171	Sheet Materials for Curing Concrete
C 172	Sampling Freshly Mixed Concrete
C 173	Air Content of Freshly Mixed Concrete by the Volumetric Method
C 231	Air Content of Freshly Mixed Concrete by the Pressure Method
C 260	Air-Entraining Admixtures for Concrete
C 309	Liquid Membrane-Forming Compounds for Curing Concrete
C 494	Chemical Admixtures for Concrete
C 595	Blended Hydraulic Cements
C 618	Fly Ash and Raw or Calcimined Natural Pozzolan for Use as a Mineral Admixture in Portland Cement Concrete
C 881	Epoxy-Resin-Base Bonding Systems for Concrete
D 1751	Preformed Expansion Joint Filler for Concrete Paving and Structural Construction (Non-extruding and Resilient Bituminous Types)

1.04 SUBMITTALS

A. Submit concrete MANUFACTURER's mix design to the ENGINEER.

B. Submit Shop Drawings showing the sequence for concrete placement and the location and details of construction, expansion, and control joints, block-outs, openings, and other embedded items not shown on the Contract Drawings.

C. Submit concrete finishing plan detailing concrete placement rate, proposed number and type of equipment, crew size, curing method, and for large flat work, proposed method of surface evaporation minimization and control.

D. Submit compression test results to the ENGINEER.

E. Submit in accordance with Section 01300 of these specifications.

PART 2 - PRODUCTS

2.01 CEMENT

A. Cement shall be standard Portland cement of American manufacture, conforming to ASTM C150, Type I. Only one brand of commercial Portland cement shall be used in the exposed concrete of the structure. Cement reclaimed by cleaning bags or from leaking containers shall not be used. Each bag shall weight approximately 94 pounds and contain one cubic foot.

2.02 CONCRETE AGGREGATES

A. Fine aggregates shall be sand having clean, hard, durable, uncoated grains and free from deleterious substances and shall conform to ASTM C33.

B. Coarse aggregates shall be crushed stone having clean, hard, durable, uncoated particles conforming to ASTM C33. Aggregate for lightweight concrete shall conform to ASTM C330.

2.03 WATER

A. Water used in mixing concrete shall from a potable water source and free from deleterious amounts of acids, alkalies or organic materials.

2.04 EXPANSION JOINT FILLER MATERIAL

A. Expansion joint materials shall be asphalt-impregnated fiber strips, 1/2-inch thick, unless otherwise shown or noted in the Contract Documents, conforming to ASTM D1751.

2.05 WATERSTOPS

A. Where shown in the Contract Documents and/or otherwise required in expansion joints and construction joints, waterstops shall be polyvinyl chloride (PVC) and shall incorporate a galvanized steel wire along both edges, which shall be used to secure the waterstop in position, by tying to reinforcement, during concrete placement. The waterstop shall be flat corrugated, 6-inches wide and 3/8-inch thick at its center. The waterstop shall extend the entire length of the joint; and, all splices shall be heat-welded and tested in accordance with the MANUFACTURER's instructions. Provide prefabricated tees, crosses, and other configurations as required for proper installation.

2.06 NON-SHRINK GROUT

A. Non-shrink grout shall be a ready-to-use non-metallic aggregate product requiring only the addition of water at the jobsite, and shall conform to COE CRD-C-621.

2.07 VAPOR BARRIER

A. The use of vapor barrier under ground slabs is PROHIBITTED, unless specified on the Construction Drawings.

2.08 ADMIXTURES

A. Water reducing admixture shall conform to ASTM C494, Type A.

B. Water reducing, retarding admixture shall conform to ASTM C494, Type D.

C. Non-Corrosive, Non-Chloride Accelerator: The admixture shall conform to ASTM C494, Type C.

D. Air entraining admixture shall conform to ASTM C260.

E. High range water reducer (HRWR) shall conform to ASTM C494, Type F or G.

F. Calcium Chloride: Calcium chloride or admixtures containing more than 0.1 percent chloride ions are not permitted.

2.09 CURING AND SEALING COMPOUNDS

A. Curing compound shall be acrylic based, conforming to ASTM C309.

B. Sealing-hardener compound shall conform to ASTM C309.

2.10 BONDING COMPOUNDS

A. Bonding Compound shall conform to ASTM C881.

2.11.1 DRILLED ANCHORS

A. Drilled anchors shall be Type 304 or Type 317 stainless steel and anchored to the concrete with and epoxy adhesive: Hilti HVA or HIT-C-100; Rawl Chem-Steed, Molly Parabond, or favorably reviewed equivalent.

PART 3 - EXECUTION

3.01 CONCRETE QUALITY

A. All mix designs shall be proportioned in accordance with ACI 211.1. The proportioning shall be based on the requirements of a well-graded high-density plastic and workable mix within the slump range and strengths required. The following classes of concrete are required:

1. Class A

a) Compressive strength at 28 days: 3000 psi
b) Slump shall be a maximum slump of 3 inches.
c) Concrete shall have a maximum water-cement ratio of 0.50.

2. Class AA

a) Compressive strength at 28 days: 3500 psi
b) Slump shall be a maximum slump of 3 inches.
c) Concrete shall have a maximum water-cement ratio of 0.47.

3. Class AAA

a) Compressive strength at 28 days: 4000 psi
b) Slump shall be a maximum slump of 4 inches.
c) Concrete shall have a maximum water-cement ratio of 0.43.

4. Class C

a) Compressive strength at 28 days: 2000 psi
b) Slump shall be a maximum slump of 6 inches.
c) Concrete shall have a maximum water-cement ratio of 0.66.

B. Slump: Testing frequency shall be as specified in Article 3.16A herein.

C: Air Content: All concrete shall have an air content of 6.5 percent with a tolerance of $^{+}$/- 1.5%. Testing frequency shall be as specified in Article 3.16A herein.

D: Admixture Usage: All concrete shall contain a water reducing admixture or water reducing-retarding admixture, and an air entraining agent. All concrete placed at air temperatures below 50 degrees F shall contain the specified non-corrosive non-chloride accelerator. The use of admixtures, allowed in this Specification, is optional and subject to favorable review of the ENGINEER.

3.02 MIX DESIGNS

A. The CONTRACTOR shall submit the concrete supplier's mix design and strength data for each class of concrete specified to document compliance with the specifications. The CONTRACTOR shall not use any concrete in this work without approval of the design mix by the ENGINEER.

B. If the concrete production facility does not have a standard mix or test data meeting the requirements of this Specification, trial batches of the proposed mix shall be prepared by the production facility in accordance with ACI 211.1 and tested by an independent laboratory hired by the CONTRACTOR at no cost to the OWNER.

C. For concrete placed by pumping, the mix design shall be adjusted, if required, to meet the recommendations of ACI 211.1.

D. Compression test specimens made to verify the mixes shall be made in accordance with ASTM C192. Aggregates shall be tested in accordance with ASTM C33. All compression test specimens shall be tested in accordance with ASTM C39.

3.03 PLANT MIXING

A. Proportioning Concrete

1. Proportions shall be in compliance with approved design mix for each class of concrete.
2. The mixing plant shall be fitted with adequate equipment and facilities for accurate measurement and control of the quantities of material and water used in the concrete.
3. Concrete materials shall be measured by weight except for admixtures, which shall be measured by volume.

B. Batching

1. The CONTRACTOR shall provide all necessary equipment to accurately determine and control actual amount of materials entering into the concrete mix. Individual ingredients shall be weighted separately for each batch. Accumulative weighing will be allowed if equipment is in acceptable working order as determined by the testing laboratory and approved by the ENGINEER. Accuracy of all weighing devices shall be such that successive quantities can be measured to within one percent of the desired amount.
2. Completely discharge contents of the mixer before each new batch is loaded. Use of retempered concrete or wash water is not permitted.
3. Ready-mixed concrete shall be mixed and delivered in accordance with requirements of ASTM C94 and the following:

   a. A separate water-metering device (not truck tank) shall be used for measuring water added to the original batch.
   b. Use of wash water as a portion of the mixing water is not permitted. Wash water added to empty drums after discharging shall be removed before a new batch is received.
   c. Centrally mixed concrete shall be mixed for the length of time specified herein, not "shrink-mixed".
   d. Mixing drums shall be watertight.
   e. Concrete shall be discharged within one hour from the time concrete was mixed, if centrally mixed, or from time the original water was added, if transit-mixed.
   f. Furnish a delivery ticket with each load of concrete delivered under these Specifications to the ENGINEER. Delivery ticket shall show clearly the class and strength of concrete, size of coarse aggregate, water per cubic yard, the slump ordered,

quantities of all admixtures, and the date and time of departure from the batching plant.

3.04 CONVEYING EQUIPMENT

A. If concrete is to be transported in carts or buggies, the carts or buggies shall be equipped with pneumatic tires.

B. Equipment for chuting or other methods of conveying concrete shall be of such size and design as to insure a practically continuous flow of concrete at delivery without segregation of materials.

3.05 CONVEYING

A. Concrete shall be conveyed from mixer to place of final deposit by methods that will prevent separation or loss of the material.

B. Runway supports shall not bear upon reinforcing steel or fresh concrete.

C. All conveying equipment shall be thoroughly cleaned before each run of concrete is begun.

3.06 DELIVERY AND PROTECTION OF MATERIALS

A. Deliver ready-mixed concrete in compliance with requirements set forth in ASTM C94.

3.07 SEVERE-WEATHER PROVISIONS

A. Hot-Weather Concreting

1. Provide adequate methods of lowering temperature of concrete ingredients so that the temperature of concrete when placed does not exceed 90 degrees F.
2. When the weather is such as to raise the as-placed concrete temperature consistently above 90 degrees F, Pozzolith retarder shall be used.
3. Subgrade and forms shall be wetted with water before placing of concrete. All excess water shall be removed before concrete is placed.
4. Curing shall start as soon as practicable to prevent evaporation of water. Flat work shall be protected from dry winds, direct sun and high temperatures.

B. Cold-Weather Concreting

1. Provide adequate equipment for heating concrete materials and protecting concrete during freezing or near-freezing weather. No frozen materials, or materials containing ice, shall be used.
2. All concrete materials and all reinforcement, forms, fillers and ground with which concrete is to come into contact shall be free from frost.

3. Whenever the temperature of the surrounding air is below 40 degrees F and falling, all concrete placed in the forms shall have a temperature of between 70 and 80 degrees F, and adequate means shall be provided for maintaining a temperature of not less than 70 degrees F for three days, or 50 degrees F for five days, or for as much more time as is necessary to insure proper curing of the concrete. If high early strength concrete is used, the requirement for maintenance of 50 degrees F can be reduced to three days.
4. Use only the specified non-chloride accelerator. Calcium chloride or admixtures containing more than 0.1 percent chloride ions are not permitted.
5. Housing, covering or other protection used in connection with curing shall remain in place and intact at least 24 hours after the artificial heat is discontinued.

3.08 INSPECTION OF WORK BEFORE PLACING

A. The CONTRACTOR shall inspect the forms to receive concrete for any deficiencies, which would prevent proper placing of concrete. Do not proceed with placing concrete until such deficiencies are corrected.

B. The CONTRACTOR shall give the ENGINEER at least 48 hours notice before any concrete is to be cast. Concrete shall not be cast until the ENGINEER has observed and given approval of the work to be cast including, but not limited to, the placement of all the reinforcing, accessories, forms and the surfaces to be cast against. Such observations are in the nature of assisting the CONTRACTOR to minimize errors and in no case will they serve to relieve the CONTRACTOR of the responsibility to provide the materials and workmanship required by the Contract Documents.

C. The CONTRACTOR shall not place concrete on earth until the fill or excavation has been prepared as set forth under applicable Sections of the Specifications for that Work.

D. The CONTRACTOR shall not place any item in the concrete that has not been authorized by the Contract Documents and/or the ENGINEER. The CONTRACTOR shall insert all the items as required by the other trades and properly position and secure them in their intended location. Openings other than those, which are facilitated by sleeves, shall be properly formed and positioned as required by the other trades.

E. Do not place concrete in forms until all foreign matter has been removed from forms and the reinforcing steel is in proper condition for placement of concrete.

F. Remove hardened, or partially hardened, concrete on forms or reinforcement before placing concrete.

3.09 PLACING

A. Deposit concrete as close as practicable in its final position to avoid segregation due to rehandling or flowing. Do not deposit concrete on work that has partially hardened or been contaminated by foreign material, and do not use retempered concrete. In no case shall concrete be cast when the elapsed time after initial addition of water and cement to batch exceeds 90 minutes, unless accepted by the ENGINEER.

B. Concrete shall be placed to avoid the displacement of reinforcing, and coating or spattering of the reinforcing steel. The placing of concrete within forms shall be regulated so that the pressure within the forms does not exceed design pressures. In placing concrete, each layer shall be placed following the preceding layer to prevent lines of separation or "cold joints". After the concrete reaches its initial set, jarring the formwork or placing strain or vibration on the ends of projecting reinforcing bars shall be carefully avoided.

C. Concrete shall not be dropped more than four feet. For greater distances of drop, concrete shall be handled with metal chutes or tremie pipes. Greater drops shall be permitted only if approved by the ENGINEER.

D. Once concreting has started, it shall be carried on as a continuous operation until placing of concrete between construction joints is completed. The top surface shall be finished to the required alignment.

E. Concrete shall be placed in layers not over 12-inches deep and each layer shall be compacted with the aid of mechanical internal-vibrating equipment supplemented by hand spading. Vibrators shall in no case be used to transport concrete. Use of form vibrators will not be permitted. Internal vibrators shall maintain a speed of not less than 5,000 impulses per minute when submerged in the concrete. At least one spare vibrator shall be maintained as a relief. Duration of vibrator use shall be limited to that necessary to produce satisfactory consolidation without causing objectionable segregation. Vibrator shall not be lowered into courses that have begun to set. Apply vibrator at uniformly spaced points not further apart than the visible effectiveness of the machine.

F. Type and use of vibrators shall be in accordance with ACI 301.

3.10 PROTECTION

A. Protect freshly placed concrete from damage or injury due to water, falling objects, persons or anything that may mar or injure finish surface on concrete. Only light use of the floor shall be permitted for the first seven (7) days after placing of concrete.

3.11 CONSTRUCTION JOINTS

A. Early in the construction program, the CONTRACTOR shall review with the ENGINEER any construction joints proposed for use, which are not indicated on the Contract Drawings. The CONTRACTOR shall not use any construction

joints, which are not approved by the ENGINEER. In all cases, construction joints shall occur at sections of minimum shear. Where construction joints are to be made, concrete surfaces shall be roughened (construction joints detailed with keyways in slabs and walls, are not required to be roughened) and thoroughly cleaned of foreign matter and laitance. In addition to the foregoing, joints shall be dampened with water and the specified bonding compound applied, or a slush coat of neat cement grout shall be applied

3.12 FINISHING

A. The spraying, wiping, or any placement of water on the concrete for ease of surface finishing is STRICTLY PROHIBITED.

B. CONTRACTOR shall plan each concrete pour for adequate manpower, placement rate, standby equipment, and concrete curing reduction methods to insure that concrete finishing can be maintained at a rate meeting or exceeding the drying rate of the concrete surface. CONTRACTOR shall plan the sequence of concrete placement to compensate for areas of direct sunlight and shadows and areas of wind blockage. CONTRACTOR shall utilize methods of reducing accelerated rates of surface evaporation, such as, impervious sheeting, water misting, spray surface films, windscreens, canopies, or changes in work hours. CONTRACTOR shall submit methodology to the ENGINEER for approval, prior to start of concrete placement.

C. Formed Surfaces: Formed surfaces shall be finished and/or patched after curing in accordance with Articles 3.15 and 3.14, respectively, of this Section.

D. Interior floor slabs and equipment pads shall have a smooth-troweled finish in accordance with the following:

1. Concrete shall be placed, consolidated, struck-off and leveled to the proper elevation. After the surface has stiffened sufficiently to permit the operation and the water sheen has disappeared, the surface shall be wood floated, by hand or power float, at least twice, to a uniform sandy texture. Floors shall be leveled such that depressions between high spots do not exceed 1/4-inch under a 10 foot straightedge except where drains occur, in which case the floors shall be pitched to the drains as indicated on the Contract Drawings.
2. After the concrete has received a float finish, it shall be troweled at least twice to a smooth dense finish. The drying of the surface moisture before floating or troweling shall not be hastened by the dusting on of dry sand or cement. Both power and hand troweling shall be required. The first troweling shall be done by a power trowel and shall produce a smooth surface relatively free of defects. Additional troweling shall be done by hand after the surface has hardened sufficiently. The final troweling shall be done when a ringing sound is produced as the trowel is moved over the surface. The surface shall be thoroughly consolidated by the hand troweling operations. The finished surface shall be free of any trowel marks or other imperfections; shall be uniform in texture and appearance, and shall be in true plane within the tolerance specified.

Any deviation from this condition, which remains after the troweling is completed, shall be corrected by grinding.

E. Broom Finish: Broom finish shall be applied to all exterior sidewalks, walkways, working pads, platforms and all steps and landings both interior and exterior.

1. Concrete shall be placed, consolidated, struck-off and leveled to the proper elevation. After the surface has stiffened sufficiently to permit the operation and the water sheen has disappeared, the surface shall be wood floated, by hand or power float, at least twice, to a uniform sandy texture. Floors shall be leveled such that depressions between high spots do not exceed 1/4-inch under a 10 foot straightedge except where drains occur, in which case the floors shall be pitched to the drains as indicated on the Contract Drawings.
2. After the concrete has received a float finish, it shall be broomed with a flexible bristle broom or burlap belt drawn across the surface. Surface must be hardened sufficiently to retain the scoring or ridges. Scores or ridges shall be transverse to traffic or at right angles to the slope of the slab.

3.13 CONTROL (CONTRACTION) JOINTS

A. Control joints shall be sawed, formed or otherwise placed.

B. Sawed control joints shall be "wet cut" within 3 hours of the initial toweling of the concrete surface in the area of the expansion joint. The expansion joint shall be cut to a depth not to exceed 75% of the concrete cover over steel reinforcement.

C. Control Joints to be sealed with caulk compound shall be resawed to the width and depth indicated on the construction drawings or 3/8" width by 1 inch depth within 7 calendar days of the concrete placement. The expansion joint shall be filled with an approved sealant.

3.14 CURING

A. All Slabs. After placement and finishing, concrete shall be maintained in a moist condition for a minimum of seven successive days during which the temperature of the concrete is 50 degrees F or above. For temperatures of 50 degrees F and below, curing period shall be 14 successive days.

1. Concrete shall be kept moist by any one, or combination, of the following methods:

a. Ponding or Immersion: Continually immerse the concrete in water throughout the curing period. Water shall not be more than 20 degrees F less than the temperature of the concrete.
b. Fog spraying or Sprinkling: Provide uniform and continuous application of water throughout the curing period.

c. Pervious Sheeting: Completely cover surface and edges of the concrete with two thicknesses of wet sheeting. Overlap sheeting 6-inches over adjacent sheeting. Sheeting shall be at least as long as the width of the surface to be cured. During application, do not drag the sheeting over the finished concrete nor over sheeting already placed. Wet sheeting thoroughly and keep continuously wet throughout the curing period.

d. Impervious Sheeting: Wet the entire exposed surface of the concrete thoroughly with a fine spray of water and cover with impervious sheeting throughout the curing period. Lay sheeting directly on the concrete surface and overlap edges 12-inches minimum. Provide sheeting not less than 18-inches wider than the concrete surface to be cured. Secure edges and transverse laps to form closed joints. Repair torn or damaged sheeting or provide new sheeting. Inspect surface of concrete daily for wetness. The surface shall be kept continuously wet during the curing period.

B. All Other Concrete: After placement, concrete shall be maintained in a moist condition for the same periods as specified above.

1. Concrete in Formed Surfaces (Slabs, Beams, Columns and Building Walls, if applicable): Keep forms and exposed surfaces wet with water during the curing period. If forms are removed before the end of the curing period, apply a curing compound within one hour after form removal.

3.14 PATCHING

A. Any concrete, which is not formed as required, or for any reason is out of alignment or level or shows a defective surface, or shows defects which reduce the structural adequacy of a member or members, as determined by the ENGINEER, shall be considered as not conforming with these Specifications and shall be removed from the Project by the CONTRACTOR at the CONTRACTOR's sole expense, unless the ENGINEER grants permission to patch the defective area. Permission to patch any such area shall not be considered a waiver of the ENGINEER's right to require complete removal of the defective work if the patching does not, in the opinion of ENGINEER, satisfactorily restore the quality and appearance of the surface or the structural adequacy of the member or members.

B. After removing the forms, all concrete surfaces shall be inspected and any joints, voids, stone pockets or defective areas permitted by the ENGINEER to be patched and all tie holes, shall be patched. Defective areas shall be chipped away to a depth not less than 1 inch with the edges perpendicular to the surface. Remove defective areas to sound concrete with clean, square cuts. Dampen concrete surfaces to be in contact with patching concrete and apply the specified bonding compound. Place patching concrete over the bonding compound as specified by the MANUFACTURER. Place, compact and finish to blend with adjacent finished concrete. Cure in the same manner as adjacent concrete.

Surfaces prepared for patching shall be approved by the ENGINEER prior to the application of the patching mix.

C. Patching concrete mix (or mortar) shall be subject to the approval of the ENGINEER. The patching concrete shall be compacted into place and screened off so as to leave the patch higher than the surrounding surface. It shall then be left undisturbed for a period of one to two hours to permit initial shrinkage before being finished. The patch shall be finished to match the adjoining surface. All patches shall be cured as specified for the original concrete.

D. Tie holes left by withdrawal of rods or the holes left by removal of ends of wall ties shall be filled solid with mortar after first being wetted. For holes passing through the wall, a plunger-type grout gun shall be used to force the mortar through the wall starting at the back face. A piece of burlap or canvas shall be held over the hole on the outside and when the hole is filled, the excess mortar shall be struck off with the cloth flush with the surface. Holes not passing through the walls shall be filled using a small tool that will permit packing the hole solid with mortar. Any excess mortar at the surface of the wall shall be struck off flush with a cloth.

3.15 FINISHES ON FORMED SURFACES

Upon completion of patching, surfaces of concrete shall be finished as follows:

A. Common finish shall be produced by filling all tie holes, honeycomb and depressions, and knocking off and evening up burrs and form marks.

B. Visible formed surfaces shall receive a rubbed finish. Within seven days of the formwork removal, all tie holes, depressions and honeycombs shall be patched and entire surface shall be rubbed with concrete rubbing stone to blend patch surface with formed surface and remove concrete burrs and ridges.

C. A rough finish shall be produced by filling all tie holes and honeycomb and in other respects leaving the surface as formed. All concrete surfaces which will be covered by earth or otherwise obstructed from view in the completed structure shall receive a rough finish.

3.16 TESTING SERVICES

A. The CONTRACTOR shall arrange for an independent third party concrete testing. These services will include:

1. Review concrete delivery ticket for mix design, time since dispatch, and amount of admixtures added and notify CONTRACOR and ENGINEER of discrepancies.
2. Perform slump and air entrainment testing once per every ten (10) cubic yards of concrete delivered to the job Site, or once per truck, whichever is less. Slump testing, air entrainment testing, and compression test specimens shall be tested in accordance with ASTM C39.

3. Make test compression specimens at the rate of one set per 50 cubic yards or fraction there of. Make a minimum of four test cylinders per set. Field cure cylinders for a minimum of three days. Transport laboratory cure test cylinder for compression testing as follows. One cylinder will be compression tested at seven days and two cylinders shall be compression tested at 28-days for design strength, and one cylinder will be retained in reserve for testing at 56 days, if necessary.

4. Provide test reports within seven days of testing and show all pertinent data, such as class of concrete, exact location of pour, air temperature, concrete temperature, date of pour, time of pour, corresponding truck numbers for ready-mixed concrete, date on which specimen was broken, age of specimen, compressive strength of specimen, slump test results, and air content of pour from which the specimen was made. One copy each of all tests shall be sent to the CONTRACTOR and copies of each to the ENGINEER.

5. Periodically inspect the batching plant and file a report with the ENGINEER stating whether the MANUFACTURER's equipment and methods meet the requirements of these Specifications.

B Temperature and Placing Record: Temperature record shall be made each day during the concreting operations. Records shall also include location, quantity and starting and finishing time of placement for all concrete work. Copy distribution shall be as specified above for test reports.

C. No additional payment will be made for concrete testing. Concrete testing shall be incidental to placement of concrete.

3.17 EVALUATION OF COMPRESSION TESTS

A. Evaluation of compression test results shall be as follows:

1. For each class of concrete, compressive-strength tests for laboratory-cured cylinders shall be considered satisfactory if the averages of the results of all sets of three consecutive compressive-strength tests equal or exceed the 28-day design compressive-strength specified; and, no individual cylinder strength test falls below the required compressive strength by more than 500 psi. Strength tests of specimens cured under field conditions may be required by the ENGINEER to check the adequacy of curing and protecting of the concrete placed. Specimens shall be molded by the field quality-control laboratory at the same time and from the same batch as the laboratory-cured specimens.

B. Faulty Concrete: Failure to meet any of the specified conditions constitutes faulty concrete. Unless otherwise directed by the ENGINEER, faulty concrete shall be removed and replaced with concrete as specified, at no expense to the CSDG.

C. Additional Testing: If permitted by the ENGINEER, additional testing shall be subject to the approval of ENGINEER at no expense to the CSDG. Load testing, if permitted by the ENGINEER, shall be conducted in accordance with the loading criteria as required by the design of the structure.

D. Neither the results of laboratory verification tests nor any provision in the Contract Documents shall relieve the CONTRACTOR of the obligation to furnish concrete of the class and strength specified.

*****END OF SECTION*****

DIVISION 11

SECTION 11399

WELLHEAD VALVE BUILDING

PART 1 - SPECIFIC

1.01 SCOPE OF WORK

A. Furnish all labor, materials, tools and equipment necessary to construct the leachate pump station as shown on the Contract Drawings.

1.02 RELATED SECTIONS

A. Excavation – Section 02220

B. PVC Pipe and Fittings – Section 02610

C. Cast-in-Place Concrete – Section 03300

D. Pipe Hangers, Supports, and Anchors – Section 15094

E. Basic Electrical Requirements – Section 16000

F. Lightning Protection – Section 16502

1.03 SUBMITTALS

A. Cast-in-place concrete and steel reinforcement for construction of foundation and sidewalls of leachate pump station:

1. Shop Drawings:

a. Reinforcing steel drawings conforming to ACI SP-66 showing assembly diagrams, location diagrams, splicing and laps of bars, shapes, dimensions, and details for bar reinforcing and stirrup spacing, accessories and openings.

2. Product Data:

a. Miscellaneous materials manufacturer's literature.

B. Wood Framing and Sheathing:

1. No submittals required.

C. Coatings

1. Brochures describing al materials to be used, naming the manufacturer, installation instructions and coating thickness of such materials.

D. Submit in accordance with Section 01300.

PART 2 - PRODUCTS

2.01 FRAMING LUMBER

A. Douglas Fir, No. 2; Southern Pine, medium grain, No. 2; or other lumber product having allowable unit stresses not less than 575 psi unit stress in bending (Fb) with 1,400,000 psi modules of elasticity (E). Framing lumber not carrying calculated stresses shall be WCLB Stud Grad, Douglas Fir, Southern Pine, or better. All lumber shall be pressure treated.

B. Sizes:

1. Studs 2 by 6
2. Rafters 2 by 8
3. Plates 2 by 8

2.02 TRIM, FINISH, AND FRAMES

A. Southern Pine, Ponderosa Pine, White Pine, or Douglas Fir, Grade C in accordance with WCLB.

2.03 EXTERIOR SIDING

A. Vinyl siding over plywood sheathing

2.04 PLYWOOD SHEATHING

A. General: Conform to Product Standard PS-166, graded by American Plywood Association. Place with 1/16-inch clearance at end joint, 1/8 clearance at side joints.

B. Leachate Interior Walls: Use ½-inch A-C plywood.

C. Roof Sheathing: 5/8-inch CDX, with 15 pound felt roof paper.

2.05 MARKINGS

A. Each piece or each bundle of lumber, millwork, and trim shall be identified by the grade mark of a organized association or independent inspection agency that is certified by the Board of Review, American Lumber Standards Committee, to grade the species.

B. Each sheet of plywood shall bear the mark of a recognized association or independent inspection agency that maintains continuing control over the quality of the plywood. The mark shall identify the plywood by species group of span rating, and shall show exposure durability classification, grade, and compliance with PS 1

C. Each treated piece shall be inspected in accordance with AWPA M2 and permanently marked or branded by the producer in accordance with AWPA M6, except that lumber which is small than 2 by 4 inches or shorter than 36 inches and bundled, may be marked on outer faces only.

2.06 MOISTURE CONTENT OF WOOD PRODUCTS

A. Furnish air-dry and kiln-dry lumber. Treated lumber shall be kiln-dried after treatment.

B. The maximum moisture content of wood products at time of delivery to the job site shall be as follows:

1. Interior Finish Lumber, Trim, and Millwork: For 1¼ inches or less in nominal thickness, 12 percent on 85 percent of the pieces and to 15 percent on remainder.
2. Exterior Treated or Untreated Finish Lumber and Trim: For 4 inches or less in nominal thickness, 15 percent.
3. Other Materials: 19 percent.

2.07 PRESERVATIVE TREATMENT OF WOOD PRODUCTS

A. Lumber treated in accordance with AWPA C1 and AWPA C2, and plywood in accordance with AWPA C1 and AWPA C9 shall be used on wood members in contact with masonry or concrete. Treatment shall be verified by an approved inspection agency report, or the AWPB LP22 on each piece.

B. Furnish pressure treated lumber for:

1. All wood members installed above and below grade, interior or exterior

2.08 FASTENERS

A. Nails and staples shall be size and type best suited for the purpose, in accordance with commonly accepted construction practices. Conform to Fed. Spec. FF-N-15-105 when applicable.

B. Fastener Lengths

1. Sheathing: 1-inch into supporting member
2. Siding: 1½ inches into supporting members
3. 1-inch thick lumber: minimum 8d nails
4. 2-inch thick lumber: minimum 16d nails

C. All fasteners shall be hot dipped galvanized.

2.09 SOFFIT VENTS

A. 2-inch diameter, plastic or aluminum

2.10 ASPHALT SHINGLES ROOFING

A. Mineral granule-surfaced asphalt shingles shall be approximately 12 x 26 inches in dimensions and self-sealing, three-tab adhesive strip design, with a 20-year life guarantee. Shingles shall meet a wind velocity rating of 60 mph plus or minus 5% in accordance with ASTM D3161. Shingle color shall be black.

2.11 ELECTRICAL

A. Interior Lighting:

1. Ceiling mount fluorescent Fixtures
2. Quantity: 4 minimum
3. Watts: 120 minimum
4. Controlled by switch at doorway
5. Cooper Lighting – Lumark or approved equal

B. Exterior Lighting:

1. Heavy Duty Wall Units
2. Quantity: 2 minimum
3. Controlled by interior wall switch
4. Watts: 150 minimum
5. Cooper Lighting – Lumark or approved equal

C. Combination Emergency Lighting / Exit Fixture

1. Material Polycarbonate
2. RED LED
3. UL 924 Listed
4. Cooper lighting, Sure-Lites Series, Model LPX70RWHDH or approved equal

D. Receptacles

1. 20 amp rated 120 volt;
2. Exterior splash-proof receptacles;
3. At 12 foot spacing maximum;

E. Circuit Breaker Panel – Provide 100 Amp circuit breaker panel as shown on drawings. Provide 2 – 20 amp single pole breakers as spare circuits

2.12 VENTILATION SYSTEM

A. Exhauster

1. Direct Drive
2. 1000 CFM @ 0.25 SP
3. 1/4 Hp motor
4. 115 VAC
5. Manufacturer Dayton, or approved equal

B. Exhauster Intake Guard

1. 20 gage galvanized steel construction
2. Complies with OSHA requirements
3. Manufacturer Dayton, or approved equal

C. Thermostat Control

1. Multi purpose unit
2. Contacts SPDT
3. Temperature Range 40 degrees to 90 degrees
4. 120 VAC; 13 Amp rated
5. Manufacturer Johnson Controls, or approved equal

D. Manufacturer Exhauster Shutter

1. Aluminum Construction
2. 16 gauge
3. Single panel
4. Manufacturer Dayton, or approved equal

2.12 HEATER

A. Size to maintain – 50 °F

B. Electric – Single Phase

C. Floor / Wall Mounted

D. Thermostat Controlled:

1. Temperature Range – 40°F to 90°F

2.13 INSULATION

A. Fiberglass battens

B. R-19 minimum

2.14 SAFETY EQUIPMENT

A. Dry Chemical Fire Extinguisher.

1. Type: ABC Dry Chemical
2. Size: 10 LB
3. Wall Mounted
4. Inspection Tag
5. AMEREX Model B441 or approved equal

B. Eye Wash Station

1. Capacity – 32oz bottles
2. Quantity –2 units
3. Lab Safety Supply, Model 14263 or approved equal

C. Telephone:

1. Multi-phone (4) line
2. Cordless Unit
3. Wall Mountable

*****END OF SECTION*****

SECTION 11510

SVE BLOWER SYSTEM

PART 1 - GENERAL

1.01 DESCRIPTION OF WORK

A. The CONTRACTOR shall provide a complete Soil Vapor Extraction (SVE) blower system for the Former Disposal Area (FDA) and Mounded Area (MA) as supplied by a single SVE VENDOR. The CONTRACTOR shall provide interconnecting piping, above-ground electrical, and control connections to the SVE blower system. The SVE blower system shall be installed and tested at the Site by the CONTRACTOR. The CONTRACTOR shall be responsible for site preparation and providing a foundation as required by the SVE VENDOR prior to installation of the SVE blower system.

B. The SVE VENDOR for the SVE blower system shall furnish all labor, materials, and equipment required to design and fabricate a complete, enclosed, trailer (building) mounted SVE blower system including, but not limited to, blowers, motors, silencers, air/water separator, heat exchanger, blower inlet filters, dilution air filters, condensate transfer pump, control panel, instrumentation, steel pipe, flexible connectors, valves, gauges, and other accessories, as shown on the Contract Drawings and specified in the Contract Documents. The SVE VENDOR shall select equipment to minimize pressure drops and maintains 14.5 inch-Hg vacuum at the inlet to the blower system.

C. The SVE VENDOR shall provide a complete Control System as described in Section 16930 (Control System) of the Contract Documents and as shown on the Contract Drawings. Relevant electrical components of the Control System shall be in accordance with Section 16000 (Electrical – General Provisions) of the Contract Documents.

D. SVE VENDOR shall furnish all labor, materials, equipment, tools and appurtenances required to complete the work of enclosing the SVE blower system inside a trailer or building, including walls and roof, soffits and trim, flashings and closures, doors and windows and hardware, wall louvers, wall/roof penetrations, heating system, ventilation system, insulation and sound-proofing, and lighting. The SVE vendor shall design the enclosure to include proper climate control of the enclosure interior to maintain proper operation of the SVE system in accordance with the individual equipment manufacture operating limits, but at a minimum, should be within the range of 40°F to 120°F, whether the system is operating or not. The SVE VENDOR shall layout the equipment in an enclosed trailer in such a manner as to allow maintenance and repair activities to be completed safely and easily. Heat exchanger shall be located outside the trailer on a concrete foundation.

E. The CONTRACTOR shall provide all electrical and control components necessary for the field wiring of the SVE blower system equipment as described in Section 16000 of the Contract Documents and as shown on the Contract Drawings.

F. All equipment directly connected to the SVE piping system, including instrumentation, controls, and electrical components which carry an electric current shall be Class I, Division 2, Group D rated or intrinsically safe. All equipment located within the blower building and not in contact with the SVE vapors does not require this rating (i.e. unclassified).

1.02 CODES AND REGULATIONS

A. Comply with the latest editions of following works, including all supplements hereto, all Laws and Regulations, and any other authority having jurisdiction within the requirements of this specification.

1. Local Codes
2. National Electrical Code (NEC)
3. National Fire Protection Association (NFPA)
4. Uniform Fire Code
5. Factory Mutual (FM)
6. Underwriter's Laboratory (UL)
7. Occupational Safety and Health Association (OSHA)
8. Uniform Building Code (UBC)
9. American Society of Mechanical Engineers (ASME) and American Society of Testing and Materials (ASTM) Standards for Materials of Construction
10. American Society of Civil Engineers (ASCE)
11. Illuminating Engineers Society (IES)

B. Whenever drawings or specifications require materials, workmanship, arrangement or construction of higher standard or larger size than is required by codes and regulations then drawings and specifications shall take precedence.

C. Should there be direct conflict between above-mentioned Codes and Regulations and the Contract Drawings or Specifications, the above Codes and Regulations shall govern.

D. All electrical materials and equipment shall bear the label of Underwriter's Laboratories listed by them in their list of electrical fittings; and approved by them for the purpose for which they are to be used, unless material and equipment is of type for which Underwriter's Laboratories do not list or provide label.

1.03 SUBMITTALS FOR THE SVE BLOWER SYSTEM

A. SVE System Shop Drawings:

1. Submit in accordance with Section 01300.
2. Include blower performance curves showing capacity and BHP required from 0% to 120% of rated pressure.
3. Include performance curves showing capacity and pressure drop from 0% to 120% of design capacity for inlet silencers, discharge silencers, air/water separator, heat exchanger, dilution air filters, and blower inlet filters.

4. Submit Shop Drawings of equipment offered with detailed description of operation for favorable review. Drawings shall include detailed configuration and dimensions of package system. The layout shall include the location of equipment and routing of piping including size of pipes and materials of construction.
5. Submit electric motor product data including rated horsepower, voltage, efficiency, locked starting and running kVA, service factor, rpm, enclosure type and bearing data.
6. Installation, storage and unloading instructions.
7. Submit supplier's product data for all piping, valves, and appurtenances including:

    a. Steel pipe and valves.
    b. Air Water separator.
    c. Heat Exchanger.
    e. Blower inlet filters.
    e. Condensate transfer pump.
    f. Pressure relief valves.
    g. Vacuum relief valves.
    h. Flow meters, pressure gauges, vacuum gauges, temperature gauges, and valves.
    i. Each type of level switch.
    j. Pressure transmitter.
    k. Pressure controller.
    l. Other SVE system components as specified in this Section.

B. SVE Blower System Trailer Enclosure (Building)

1. Plans shall consist of catalog cuts; design and erection drawings; foundation requirements; painting and finishing specifications; instruction manuals; and other data as necessary to clearly describe design, materials, sizes, layouts, construction details, fasteners, and erection. Include information on windows, doors, stairs, louvers, and other accessories.
2. HVAC: concurrently submit product data and sizing calculations for all heating, air conditioning, ventilation, and lighting equipment, if required.
3. Submit product data for interior lighting and receptacles.
4. Certificates: CONTRACTOR shall furnish certificates of compliance stating that the building furnished for this project complies with the material and fabrication requirements of this Section.

C. Operation and Maintenance (O&M) Manuals:

1. Provide Draft O&M Manual after completion of shop fabrication and prior to shipment. Provide final O&M Manual after start-up that shall include all changes made during start-up. Operations manual shall include written procedures, setpoints and configuration parameters, instrument calibration ranges, and a detailed troubleshooting guide. Include recommended maintenance and calibration schedules.

2. Provide equipment manufacture's Installation and Operations Manuals and revised submittal information for each component with the Draft O&M Manual.
3. Record copies of favorably reviewed Shop Drawing information to be provided in Paragraphs 1.03A and 1.03B of this Section.

D. Submit relevant control system design and product data submittals in accordance with Section 16930 concurrently with submittals in 1.03A of this section.

E. Submit relevant electrical design and product data submittals in accordance with Section 16000 concurrently with submittals in 1.03A of this section.

F. Submit above in accordance with Section 01300.

1.04 QUALITY ASSURANCE

A. SVE VENDOR:

1. The CONTRACTOR shall provide the service of the SVE VENDOR qualified technician or engineer for the SVE blower system to be present at the job site for minimum of 3 work days, excluding travel time, for assistance during SVE system startup, and training of OWNER's personnel for system operation. Include minimum of:

   a. 2 work days for Start-Up Services.
   b. 1 work day for Instructional Services.

   The SVE VENDOR and CONTRACTOR in addition to these allowances, shall provide all services required to construct and demonstrate proper operation of the system. Proper mechanical operation and completion of construction shall be demonstrated to the ENGINEER by the CONTRACTOR and SVE VENDOR prior to the initiation of these services. Proper operation shall be demonstrated in the form of an on-site mechanical checkout as described in Section 01655. These allowances for services shall not in any way effect the CONTRACTOR's and SVE VENDOR's responsibilities to address warranty issues.

B. The Electrical and Control System shall be designed and wired in accordance with all applicable Codes and Laws and Regulations including NEMA and Uniform Fire Code.

1.05 DELIVERY AND STORAGE

A. The SVE blower system shall be delivered to the site in a dry and undamaged condition and stored as per manufacturer's recommendation.

PART 2 – PRODUCTS

2.01 GENERAL

A. SVE Blower System shall be designed for and be compatible with the following design conditions:

1. Design vapor flow rate: 1,200 scfm
2. Minimum vacuum at SVE Blower System inlet: 14.5-inches Hg with 1 psig discharge back pressure
3. Temperature of inlet vapor: 40-60 degF
4. Estimated influent concentrations of contaminants in vapor stream:

Contaminant	Steady-State Concentration (1) (ppm-v)
1,1,1-Trichloroethane	15
Trichloethylene	8
Tetrachloroethene	6
1,1-Dichloroethene	1
Others chlorinated VOCs	2

Note: 1) The estimated steady state influent concentrations are 33% of the expected initial concentrations which are expected to occur following one month of operation.

B. SVE VENDOR shall be one of the following companies:

1. J.E. Gasho & Associates, Inc., West Chester, PA, 610-692-5650, Contact: John Aberle;
2. Carbonair Environmental Systems Inc., New Hope, MN, 800-526-4999, Contact: Tony Goldenstein; or,
3. SBT Group, Spring Lake, NJ, 732-449-3730, Contact: Michael Burke.

2.02 BLOWERS

SVE VENDOR shall provide two equivalent blowers in parallel meeting the following:

A. Design:

1. Design flow: 600 scfm, each
2. Continuous operating vacuum: 14.5" Hg, each, minimum at 1 psig discharge, including losses for inlet and outlet silencers
3. Rotary lobe positive displacement blower
4. Cast iron housings, impellers, and covers are oil filled for lubrication
5. Oil level observation ports and grease fittings
6. Inlet and outlet silencers
7. Inlet and outlet flanged shutoff valves
8. Gas tight mechanical seals
9. Lubrication system – reservoir of oil continuously pumped through blower.

2.03 MOTORS

A. Design:

1. Totally-enclosed, fan-cooled.
2. 230/460 volts, 3 phase, 60 hertz.

2.04 AIR FILTER

A. Design:

1. Placed between moisture separator tank and blowers
2. Steel housing with replaceable filter
3. Pleated polyester felt filter capable of removing 99% of 10 micron or larger particles
4. Washable and reusable filters
5. 10" flanged inlet and outlet connections
6. Maximum 1" W.C. pressure loss at design flow rate

2.05 VACUUM RELIEF VALVES

A. Design:

1. Locate between moisture separator and suction side of each blower
2. Set for upper end of maximum allowable vacuum; 15" Hg maximum
3. Nitrile diaphragm and o-ring seat
4. Stainless steel orifice, seat washer, and pitot tube
5. Composition gaskets
6. Zinc-plated steel spring and diaphragm plate

2.06 PRESSURE RELIEF VALVES

A. Design:

1. Locate after discharge of each blower and heat exchanger
2. Set for upper end of maximum allowable pressure; 2 psig maximum
3. Nitrile diaphragm and o-ring seat
4. Stainless steel orifice, seat washer, and pitot tube
5. Composition gaskets
6. Zinc-plated steel spring and diaphragm plate

2.07 VAPOR FLOW MEASURING DEVICE AND GAUGE

A. Design:

1. In-line pressure differential measuring device with integral high and low pressure metering connections.
2. Install with minimum required upstream and downstream lengths of straight pipe.

3. Size flow meter to allow a maximum of 1-inches water pressure loss at design flow rate.
4. Provide permanently mounted differential pressure gauges attached to metering connections of pressure differential measuring device.
5. Rated for –20 to +140 deg F, -20-inch Hg max vacuum.
6. Differential pressure gauges shall be appropriately sized such that the range corresponds with the flow meter manufacturer's headloss calculations.
7. Provide two (2) vapor flow measuring devices/gauges before blowers, one prior to dilution air, and one after dilution air.

2.08 TEMPERATURE GAUGES

A. Design:

1. Provide for inlet and outlet of blower
2. Temperature range 30 to 300 deg F

2.09 PRESSURE/VACUUM GAUGES

A. Design:

1. Provide vacuum gauge on blower inlet and pressure gauge on blower outlet
2. Size in accordance with blower limitations

2.10 PRESSURE TRANSMITTERS

A. Design:

1. Monitor for high pressure after blowers
2. Monitor for high or low vacuum on suction side of blowers
3. Adjustable alarm setpoints for blower shutdown, as described in Section 16930.
4. Class I, Division 2, Group D rated or intrinsically safe.

2.11 ANALYTICAL EQUIPMENT

A. Design:

1. Provide analytical device(s) for monitoring total VOCs in extracted vapor, between lead/lag carbon units, and after carbon units at 60 min intervals.
2. Analytical device shall be a Flame Ionization Detector (FID).
3. Provide individual devices, or single channel unit, capable of multiple sample locations, line purging, and data logging.
4. Provide adjustable alarm setpoints for alarm indication and blower shutdown, as described in Section 16930.

2.12 AIR/WATER SEPARATOR

A. Design:

1. Minimum 60 gallon storage capacity
2. Tank rated for full vacuum
3. Tank material shall be 12 gauge carbon steel at minimum
4. Discharge flange with PTFE gasket
5. Tangentially mounted inlet pipe
6. Enamel finish over primer coating
7. Polypropylene coalescing media
8. ¾-inch bottom drain with ball valve
9. Sight tube assembly
10. Hand operated diaphragm pump on bottom of tank
11. Provide with level switches for shutdown of blower system and operation of condensate pump, as described in Section 16930.
12. Maximum of 3" W.C. pressure loss at design flow rate

2.13 CONDENSATE PUMP

A. Design:

1. Closed-coupled centrifugal unit.
2. Capable of discharging up to 5 gpm at 10 feet head of condensate to condensate collection tank.

2.14 HEAT EXCHANGER

A. Design:

1. Air to air heat exchanger to cool vapor stream after blowers and before carbon adsorption units.
2. Maximum discharge temperature or vapor exiting heat exchanger: 100 deg F or within 15 deg F of ambient temperature.
3. Discharge relative humidity of vapor exiting heat exchanger: 40%
4. Maximum pressure loss of vapor stream: 5-inches water
5. Heavy-duty cooling fan with OSHA-approved fan guard.
6. Materials of construction shall be suitable for outdoor use and contaminants listed in 2.01 A. 5. of this section.
7. Motor shall be sufficient capacity to properly operate the equipment under all anticipated operating conditions.
8. Motor shall be certified for use with a solid state variable speed drive.
9. Heat exchanger shall be installed outside the SVE blower system trailer.
10. Maximum noise level within 50 feet of heat exchanger shall be 60 decibels.
11. Operating pressure rating: 5 psig
12. Operating temperature rating: 400°F

2.15 SPARE PARTS

A. Provide the following spare parts:

1. Two complete sets of gaskets.
2. Four complete sets of V-belts for rated speed.
3. Minimum of four blower inlet filter replacement elements.
4. Lubricants (oil and grease) for two complete changes.

2.16 CONTROL SYSTEM

A. The SVE blowers shall be controlled locally and remotely operated as described in Section 16930.

2.17 CONTROL PANEL

A. The control panel shall be constructed as described in Section 16930 and as shown on the Contract Drawings.

2.18 COATINGS

A. Perform surface preparation only when relative humidity is less then 85%.

B. Apply surface coatings within 24 hours after surface preparation.

C. Adhere to the surface coating supplier's written recommended limit for application temperatures and moisture. Apply coatings in a dust free environment.

D. Fabricated Steel and Piping

1. Stainless Steel or galvanized steel does not require coatings.
2. Steel surfaces, supports, members, and parts shall receive two (2) coats of high build polyamide epoxy coating in strict accordance with supplier's recommendations and as favorably reviewed by the ENGINEER. Coating shall be satisfactory for exterior use in a marine and acid gas (dilute sulfuric acid) environment. Coating shall be able to withstand operating temperatures from -40° to 125° F. Coating system shall include one coat of primer and one coat of finish. Dry mil film thickness shall be between 3.0 to 6.0 mils unless otherwise specified by coating supplier. Store all coating products in a temperature controlled climate in accordance with the supplier's written instructions.
3. Coating shall be TNEMEC Series 66 or favorably reviewed equal.

2.19 SVE BLOWER SYSTEM TRAILER ENCLOSURE (BUILDING)

A. The size and weight of prefabricated components shall permit easy handling in the field; the maximum size and weight of any component shall be suitable for transportation by commercial carrier. Each piece or part of the assembly shall be clearly and legibly marked to correspond with the shop drawings.

B. The SVE system shall be mounted and enclosed in a trailer enclosure or building. The enclosure shall be designed to reduce blower noises to a maximum of 60 decibels within 50 feet of the enclosure. The enclosure shall allow complete access to the blower and condensate pump for maintenance and removal.

C. The enclosure shall be free of excessive noise from wind-induced vibrations under the ordinary weather conditions to be encountered at the locations where the building is erected, and meet all specified design requirements. Roof deck assemblies shall be designed in accordance with local building codes.

D. The procedures for developing the design loads and load combinations shall be in accordance with the most current BOCA Code and the Local Township Code. Where the requirements of the two codes conflict, use the more severe criteria. The following data shall be used in developing design loads in addition to dead load:

1. Roof live load of 20 pounds per square foot minimum. An allowance of 5 pounds per square foot (for mechanical and electrical equipment) shall be applied to the roof rafters. Ground snow load of 35 pounds per square foot shall be used in design of roof structure.
2. Established statewide occupancy importance factor of 1.0 and snow exposure coefficient (Ce) of 0.7.
4. Basic wind speed of 70 miles per hour in accordance with the BOCA Code
5. Seismic (UBC): Zone 0.

E. Enclosure shall be insulated and soundproofed to meet the temperature and noise reduction requirements specified in this section.. Insulation and soundproofing on walls, roofs, and ceilings shall be noncombustible. Insulation and soundproofing that emits toxic fumes during fire shall be prohibited.

F. Louvers shall be storm proof and fabricated of aluminum and shall be furnished with minimum 1/2" galvanized mesh bird screens.

G. At a minimum the enclosure shall be constructed with the following:

1. Main "Treatment Area" for location of SVE Blower System equipment. Provide allowance for volume and weight of inlet piping manifold (2ft x 10ft).
2. Separate "Control Room" for location of sensitive equipment (i.e. control panel, datalogger, analytical device(s), with door to Treatment Area
3. Wooden sheeting for interior wall covering.
4. Double 4-foot doors to Treatment Area for equipment access.
5. Interior illumination shall be a minimum of 30 footcandles in Treatment Area and 70 footcandles in Control Room.
6. Locking doors.
7. Post signs on entrances reading "Hearing Protection Required".
8. Provide one (1) fire extinguisher mounted inside the building.
9. Provide two (2) duplex receptacles each (120 volt) in Treatment Area and Control Room.
10. Provide stairs, railing, etc, for building entrances, as necessary

11. Provide exterior lighting for entrance and area(s) containing the heat exchanger, hydrogen cabinet, and carbon vessels.

H. Coordinate placement of supports for wall penetrations and mounting of control panels, electrical components, heaters, lights, piping and pipe supports, fire extinguishers, and other components.

I. Electrical work shall be completed as per Division 16 specifications.

J. Sealant shall be silicone sealant. Sealant type shall be polyisobutyl type. Concealed sealant may be nonhardening type.

K. Gaskets and insulating compounds shall be nonabsorptive and suitable for insulating contact points of incompatible materials. Insulating compounds shall be nonrunning after drying.

L. The SVE VENDOR shall provide any ventilation, heating, fans, louvers, needed to property operate the SVE system and prevent overheating and freezing of equipment. All heating and ventilation equipment provided shall maintain temperatures with in the main treatment area and control room between 40°F and 120°F, whether the system is operating or not.

2.20 SVE SYSTEM PIPING

A. Piping for the SVE system provided by the SVE VENDOR shall be galvanized steel, Class 150, Schedule 40.

B. Steel Butterfly Valves

1. Valves shall be carbon steel wafertype.
2. Valves shall be pressure and temperature rated for full vacuum to 30 psig and -40°F to 225°F continuous operating conditions.
3. Valves shall provide tight shut-off in either direction.
4. Valves shall be fire resistant and specifically listed by U.L. and F.M. for use with combustible gas.
5. ANSI Class 150 Wafer Design.
6. Valves shall be factory coated with an industrial coating, suitable for outdoor use.
7. Valves shall be Neles-Jamesbury Series 815 or favorably reviewed equivalent.

C. SVE VENDOR shall provide sample ports and flow measurement ports as indicated on the Contract Drawings.

D. All piping between the blowers and heat exchanger shall be adequately insulated to protect personnel from burns. Provide insulation rated to 300°F

E. Provide drain valves on low points of piping where condensate can collect.

PART 3 - EXECUTION

3.01 The CONTRACTOR shall be responsible for coordinating the installation requirements of the SVE blower system including but not limited to the following:

1. The sizing and connection of new electrical power service and controls connection;
2. Transportation, off-loading, and installation of the new SVE system including connection to the heat exchanger and vapor treatment system;
3. The CONTRACTOR shall coordinate design of the pipe manifold with the building layout and make all electrical power connections between electrical service as described in the Contract Documents and as shown on the Contract Drawings.
4. Pressure and vacuum testing of piping; and,
5. Conduction of the mechanical checkout and start up.

3.02 SHOP INSPECTION/TESTING

A. Prior to shipment of the SVE blower system to the job site, the ENGINEER may perform an inspection of the SVE blower system at the SVE VENDOR's shop. The CONTRACTOR shall provide the ENGINEER with a ten day notice of the selected date of inspection. As a part of the inspection, the SVE VENDOR shall conduct a Functional Test to demonstrate complete operation of all system components including but not limited to the following:

1. Operation of the blowers at the design conditions specified above.
2. Operation of the condensate transfer pump.
3. Operation of all shutdown interlocks.
3. Pressure/vacuum testing of system piping.

3.03 The SVE VENDOR shall pressure/vacuum test all piping in accordance with Section 01666. The SVE VENDOR shall conduct testing on all piping.

*****END OF SECTION*****

SECTION 11520

CARBON ADSORPTION UNITS

PART 1 - GENERAL

1.01 DESCRIPTION OF WORK

A. CONTRACTOR shall provide a complete vapor phase granular activated carbon (GAC) vapor treatment system supplied by a single CARBON VENDOR, as shown on the Contract Drawings and specified herein.

B. CONTRACTOR shall off-load and install a complete vapor phase GAC vapor treatment system. The CONTRACTOR shall be responsible for site preparation and providing a foundation as required by the CARBON VENDOR prior to installation of the GAC treatment system.

C. CONTRACTOR shall supply anchor devices and establish anchor locations in accordance with CARBON VENDOR's directions.

D. CONTRACTOR shall coordinate with the CARBON VENDOR for equipment delivery to the Site.

E. CONTRACTOR is responsible for receiving, storing, and handling equipment. CONTRACTOR shall notify ENGINEER immediately of equipment delivery and ENGINEER shall inspect the equipment prior to off-loading.

F. CONTRACTOR shall install and test equipment to provide fully operational system in accordance with CARBON VENDOR specifications and the Contract Documents and Contract Drawings in conjunction with the ENGINEER.

G. CONTRACTOR shall provide and install all off-skid interconnecting electrical conduit and wire between the SVE blower system and the GAC system. CONTRACTOR shall ground each individual skid as per NEC code.

1.02 SUBMITTALS

A. CONTRACTOR shall provide submittals to ENGINEER in accordance with Section 01300. Submittals shall include, but are not limited to:

1. CARBON VENDOR descriptions, specifications, and data, including activated carbon, interior and exterior coatings, and specialty items.
2. CARBON VENDOR's instructions – Description of operation, instructions for installation, start-up, operation, and troubleshooting. Installation instructions must be submitted with shop drawings.
3. Shop drawings, including elevation and plan view.
4. Foundation requirements.
5. Certified test data.
6. Certification of proper installation and operation.
7. Operation and maintenance manual(s).

8. Warranty.
9. Change-out and carbon regeneration procedures and regeneration facility information

B. CARBON VENDOR shall also provide a bid for carbon change-out and regeneration services based on anticipated carbon usage rates. CARBON VENDOR shall submit the anticipated carbon usage rate in pounds per day based on breakthrough and saturation/equilibrium conditions. These values shall be based on the estimated influent concentrations and flow rates specified in Paragraph 2.01 of this section. CARBON VENDOR shall provide data, isotherms, and any associated information that supports the calculations used to estimate the carbon usage rate.

C. CONTRACTOR shall provide submittals to ENGINEER as specified in Section 01300 and as directed by ENGINEER.

1.03 QUALITY CONTROL

A. Quality control measures shall conform to the requirements specified in Section 01400.

B. Materials and methods used in the assemblage of the mechanical equipment shall, at a minimum, comply with the following standards:

1. American National Standard Institute (ANSI)
2. American Society for Testing and Materials (ASTM)
3. National Electrical Manufacturer's Association (NEMA)
4. National Electric Code (NEC)

C. The ENGINEER shall be granted the right to inspect at the factory, upon any occasion during the manufacture and assembly, all equipment covered by this Contract and to be present during any tests made upon the equipment. CARBON VENDOR shall provide the ENGINEER with a written notice 7 days prior to schedule date for conducting all tests required by the Contract Documents.

D. CARBON VENDOR shall perform CARBON VENDOR's standard shop test for each component to ensure compliance with intent of the Contract Documents.

E. CARBON VENDOR shall perform factory check of the units.

F. Materials and equipment shall be the products of CARBON VENDORs regularly engaged in the manufacture of such products, shall essentially duplicate equipment that has been in satisfactory service prior to issue date of the Contract and shall be supported by a service organization that is reasonably convenient to the Site.

1.04 SHIPPING

CARBON VENDOR shall:

A. Match mark disassembled components. Reinforce, brace, and pack for shipment per applicable commercial requirements. Seal open ends subject to detrimental conditions with removable closures.

B. Mark packed materials for identification. Show on shipping invoice, crate, box, carton or component identification, purchase order number, and consignee's name and shipping address.

C. Provide ENGINEER with complete shipping list 14 days prior to shipping.

1.05 DELIVERY, STORAGE, AND HANDLING

A. CONTRACTOR shall make arrangements with the CARBON VENDOR for delivery of the equipment.

B. CONTRACTOR shall be responsible for off-loading, handling, storing, and installing the equipment, as specified in the Contract Documents and Contract Drawings.

C. All material and workmanship shall be subject to inspection and test after delivery to the Site. In case any articles are found to be defective in material or workmanship or otherwise not in conformity the requirements of the Contract Documents, the ENGINEER shall have the right to reject such articles or require their correction.

1.06 REQUIREMENTS OF REGULATORY AGENCIES

A. CONTRACTOR and/or CARBON VENDOR shall provide materials and equipment and execute the Work, including test and inspections, per applicable provisions of federal, state, and local government laws and ordinances and referenced codes and standards. Governing laws, ordinances, codes, and standards constitute minimum requirements.

PART 2 - PRODUCTS

2.01 GENERAL DESCRIPTION/EQUIPMENT

A. The vapor treatment system shall include, but not be limited to, three (3) carbon vessels (filled with activated carbon) configured with two (2) primary carbon vessels in series for continuous lead/lag operation and one (1) spare carbon vessel, piping manifold with valving, pressure relief valves and gauges, sample ports and any other equipment required for the safe and effective operation of the system as shown on the Contract Drawings and specified in the Contract Documents.

B. CARBON VENDOR shall provide complete, ready to operate vapor treatment system in accordance with the Contract Drawings, Contract Documents, and meeting or exceeding the following performance/design criteria:

1. Air Flow: 1,200 scfm
2. Expected Influent Temperature: 100°F
3. Expected Influent Relative Humidity: 40%
4. Influent Vapor Pressure: 1 psig
5. Continuous outdoor operation.
6. Carbon Type: Virgin-grade, coconut shell, activated.
7. Design for 98% removal efficiency at the above conditions and for the following estimated mass loading of contaminants:

Contaminant	Steady-State Concentration (1) (ppm-v)
1,1,1-Trichloroethane	15
Trichloethylene	8
Tetrachloroethene	6
1,1-Dichloroethene	1
Others chlorinated VOCs	2

Note: 1) The estimated steady state influent concentrations are 33% of the expected initial concentrations which are expected to occur following one month of operation.

C. CARBON VENDOR shall indicate initial pressure loss associated with the complete vapor treatment system (both carbon filled vessels in series and piping).

D. CARBON VENDOR shall guarantee 98% removal efficiency for the specified estimated mass loading of contaminants and conditions stated above.

E. CARBON VENDOR shall be one of the following companies:

1. TIGG Corporation, Bridgeville, PA, 412-257-9580, Contact: John Sherbondy;
2. Carbonair Environmental Systems Inc., New Hope, MN, 800-526-4999, Contact: Tony Goldenstein; or,
3. Calgon Carbon Corporation, Pittsburgh, PA, 800-422-7266, Contact: Kim Thompson.

2.02 CARBON VESSELS

CARBON VENDOR shall provide:

A. Three (3) skid-mounted vapor phase GAC vessels with activated carbon. Refer to Paragraph 2.03 of this section for carbon information.

B. Two primary (2) vessels arranged in series, in a lead/lag arrangement. Arrangement/piping manifold shall permit routine change-out procedures and

enable switching of lead and lag positions after change-out as shown on the Contract Drawings.

C. One (1) of the vessels shall be arranged for use as necessary as a spare vessel after the two primary units, as shown on the Contract Drawings.

D. Materials of construction of the carbon vessels shall be resistant to the corrosive environment that is expected due to the presence of chlorinated organics (like Trichloroethylene). Refer to Paragraph 2.01 of this section for estimated contaminant concentrations.

E. At a minimum, the materials of construction of the vessels shall meet the following requirements:

1. A36 carbon steel, minimum diameter of 60 inches, and minimum straight side height of 60 inches
2. Coated exterior including: surface preparation in accordance with SSPC-SP-10; chemically resistant catalyzed epoxy or acrylic primer coating (3 to 5 mils), and high gloss aliphatic polyester urethane or acrylic enamel protective finish (2 to 4 mils); or approved equal.
3. Coated interior including: surface preparation in accordance with SSPC-SP-5 or -6; internal coating material high solids thermosetting epoxy (12-18 mils); or approved equal.

F. Each vessel shall be equipped with an inlet plenum for air distribution. The carbon bed support structure shall be designed to hold the weight of the carbon and allow even air distribution. Materials of construction shall be carbon steel, PVC, and PPL.

G. Each vessel shall be rated for a pressure no less than 5 psi at 115 degF and be equipped with a pressure relief valve set to ensure that the pressure rating of the vessel is not exceeded due to blower operation as specified in Section 11510.

H. Each vessel shall be complete with all necessary ports, drains, manways, etc. for the effective operation, maintenance, and servicing of the vapor treatment system as specified in the Contract Documents and shown on the Contract Drawings, including:

1. 8-inch diameter inlet;
2. 8-inch diameter outlet;
3. ¾-inch diameter indicator fitting;
4. 18-inch diameter manway in top head; and
5. 1-inch diameter drain with plug.

I. CARBON VENDOR shall provide skid(s) for the vessels and fully support and anchor the vessels to the skid(s), as described in paragraph 2.05.

J. CARBON VENDOR shall provide fork tubes with vessels for ease of handling and lifting lugs on the top head for lifting.

K. The vessels shall be suitable for outdoor operation.

L. Maximum pressure loss across each carbon vessel, including carbon and other internal components, shall not exceed 7.5" W.C. at the design flow rate.

2.03 CARBON

A. CARBON VENDOR shall provide each vessel with granular activated carbon suitable for the application specified in the Contract Documents. The carbon shall be virgin-grade, coconut shell activated carbon.

B. Each vessel shall have a sufficient amount of activated carbon to achieve the performance criteria of paragraph 2.01A, but no less than 2,000 pounds per vessel and a minimum bed depth of 3 feet.

C. As part of the bid for carbon change-out and regeneration, CARBON VENDOR may provide alternative(s) to coconut shell carbon for use after the first change-out. Base bid shall include coconut shell carbon; alternatives shall be considered in comparison with coconut shell carbon.

2.04 PIPING MANIFOLD AND INSTRUMENTATION

CARBON VENDOR shall provide:

A. Piping manifold, Schedule 80 PVC, configured for switching lead/lag positions, including piping for spare vessel, as shown on the Contract Drawings. Size piping as appropriate for flow rate. Piping manifold shall include all controls, instrumentation, and appurtenances necessary for the effective and safe operation of the vapor treatment system and as specified in the Contract Documents and as shown within the skid limits defined on the Contract Drawings. Piping manifold shall be pre-assembled, skid-mounted, and ready for connection to the vessels.

B. Butterfly valves (Schedule 80 PVC), not damper. Refer to Section 02610 of the Contract Documents.

C. A minimum of minimum of six (6) pressure gauges (0 to 60 inches of water) appropriate for monitoring system operation as specified in the Contract Documents and as shown on the Contract Drawings (one on the influent and one on the effluent of each unit).

D. A minimum of six (6) sample ports as shown on the Contract Drawings.

E. Two (2) ports for automatic breakthrough detection instrumentation provided by the SVE VENDOR. Coordinate with CONTRACTOR/SVE VENDOR regarding configuration of ports. Ports shall be located as shown on the Contract Drawings (between lead and lag units and after spare unit).

F. Influent and effluent connections shall be flanged and located as shown on the Contract Drawings.

G. CARBON VENDOR shall provide manifold such that piping, valves, and sample ports are located and positioned for ease of access during system operation and change-out.

H. CARBON VENDOR shall provide drain valves at low points on piping where condensate can collect.

2.05 SUPPORT SKID

CARBON VENDOR shall provide skid(s) as follows:

A. All components of the vapor treatment system shall be skid mounted prior to shipment. Number of skids shall be minimized.

B. The system shall be completely pre-piped and mounted to the skid within the limits described in the Contract Documents and as shown on the Contract Drawings.

C. The skid shall be sand blasted carbon steel with an epoxy primer and high build epoxy finish. The CARBON VENDOR shall provide adequate touch-up paint to repair any minor damage that occurs during shipping. The CONTRACTOR shall touch-up the skid after installation. The CARBON VENDOR shall be responsible for any and all damage that occurs during shipment.

PART 3 - EXECUTION

3.01 INSTALLATION

A. CONTRACTOR shall install, level, and plumb all equipment and components in accordance with the ENGINEER's and CARBON VENDOR's instructions, the Contract Documents, and Contract Drawings. CARBON VENDOR shall provide guidance for providing adequate site preparation and foundation prior to installation.

B. CONTRACTOR shall connect the influent of vapor treatment system with vapor piping from the SVE blowers/heat exchanger (Section 11510) and connect the effluent of the vapor treatment system to the exhaust stack as shown on the Contract Drawings and specified in the Contract Documents.

C. CONTRACTOR shall fully support and anchor all connections to and from the vapor treatment system skid(s) so that no weight is supported by the adjacent piping or skid components.

D. CARBON VENDOR shall support all skid piping from the skid using properly designed and fabricated pipe brackets. If the ENGINEER determines that any piping is improperly or inadequately supported the CARBON VENDOR will be responsible for correcting these conditions to the satisfaction of the ENGINEER.

F. CONTRACTOR shall make electrical and control connections as specified in the Contract Documents and as shown on the Contract Drawings.

3.02 TESTING

A. CONTRACTOR shall test, adjust, and balance equipment in accordance with the CARBON VENDOR's instructions.

B. System start-up shall be conducted in accordance with CARBON VENDOR instructions and as specified in Section 01655.

***** END OF SECTION *****

DIVISION 15

SECTION 15094

PIPE SUPPORTS AND HANGERS

PART 1 - GENERAL

1.01 DESCRIPTION OF WORK

A. The work of this Section includes all pipe supports and brackets necessary to install piping furnished under these Contract Documents. CONTRACTOR shall furnish and install all anchor bolts, pipe supports, shims, clamps, hardware and supplemental steel required for a complete installation as shown on the Drawings and/or specified herein.

B. The Drawings do not show all pipe hanger details or locations, but are intended to provide a guide as to type and usage of pipe supports required under this Contract. CONTRACTOR shall design and provide all pipe supports required to securely support all piping in accordance with the referenced standards.

1.02 REFERENCES

A. Manufacturer's Standardization Society of the Valve and Fittings Industry (MSS) Standards

SP-58	Pipe Hangers and Supports - Materials, Design and Manufacture (1983)
SP-69	Pipe Hangers and Supports - Selection and Application (1983)
SP-89	Pipe Hangers and Supports - Fabrication and Installation Practices (1985)

B. American National Standards Institute (ANSI) Standards:

B31.1	Code for Pressure Piping - Power Piping

C. American Society of Mechanical Engineers (ASME) Standards:

Section VIII	Pressure Vessels
Section IX	Welding and Brazing Qualifications

D. American Society for Testing and Materials (ASTM) Standards:

A136-84	Structural Steel
A153-82	Zinc Coating (Hot Dip) on Iron and Steel Hardware
A730-80	Repair of Damaged Hot-Dip Galvanized Coatings

1.03 SUBMITTALS

A. Shop Drawings

Shop Drawings shall include pipe support supplier's product data including widths, heights, tolerances, materials of construction, and other data for the following products:

1. Supports
2. Hangers
3. Clamps
4. Anchors
5. Straps
6. U-bolts
7. Other products specified in Part 2 of this Section.

B. Samples

1. Not required.

C. O&M Manual

1. Include record copies of Shop Drawing information to be provided in accordance with Paragraph 1.03A of this Section.

D. Submit in accordance with Section 01300.

1.04 QUALITY ASSURANCE

A. Work shall be performed by workmen experienced in the design, selection, fabrication and installation of pipe support systems.

B. Selection, fabrication and installation of pipe hangers and supports shall conform to the requirements of ANSI B31.1, MSS SP-58, SP-69 and SP-89.

C. Pipe support systems shall utilize standard manufactured supports wherever possible.

D. Pipe support materials in contact with piping shall be compatible with the piping materials such that neither shall have a deteriorating action on the other.

E. Supplemental steel shall be designed per AISC Steel Construction Manual or Uniform Building Code UBC Seismic Zone 1.

PART 2 - PRODUCTS

2.01 MATERIALS AND CONSTRUCTION

A. All supports and hangers shall meet the following material requirements:

1. All structural steel shall conform to ASTM A 36.
2. All pipe support columns shall conform to ASTM A 53, Grade B and shall be minimum Schedule 40.
3. All embedded anchor bolt materials shall conform to ASTM A 193, Grade B8; ASTM A 276, Type 304; or IFI-104, Grade 304. Nuts shall be heavy hex nuts conforming to ASTM A 194, Grade 8 or IFI-104, Grade 304. Minimum anchor bolt size for pipe supports shall be 5/8-inch diameter.
4. All carbon steel or malleable iron straps, hangers, clamps, U-bolts and other hardware in contact with the pipe shall be shop primed.
5. Expansion type anchor bolts shall be of stainless steel construction and shall comply with Federal Specifications FF-S-325.
6. Pipe supported from underneath and subject to expansion shall have adjustable pipe roll stand supports. The pipe roll stand shall be supported by structural steel or steel brackets as required.
7. Pipe supported from underneath and not subject to expansion shall have pipe saddle supports on properly sized pipe stanchions and ample, properly installed floor flanges.
8. Riser clamps for vertical piping shall be steel riser clamps.
9. U-Bolts: Steel with four finished hex nuts, galvanized, special dimensions as required for installation.
10. Turnbuckle: Galvanized forged steel construction.

PART 3 - EXECUTION

3.01 INSTALLATION

A. The CONTRACTOR shall provide pipe supports as required. Pipe supports shall support all pipe, valves, and instrumentation. Equipment connections shall not be used to support pipe, valves, or other piping equipment. Pipe supports shall be installed to allow for adequate contraction and expansion including during blower operation. All steel pipe supports shall be coated in accordance with 3.02.

B. General

1. Pipe supports shall be installed in complete conformance with the manufacturer's recommendations and the Contract Documents.
2. Pipe supports shall be selected based on pipe size. Provide all angles, channels and other structural supports to support the piping systems.
3. All supporting equipment shall be designed with a minimum safety factor of 5 based on the ultimate tensile strength of the material.

4. Contact between ferrous supports and non-ferrous piping materials shall not be permitted. Supports and clamps shall be rubber coated or copper-plated as necessary to prevent this condition.
5. Adequate supports shall be provided so that there is no movement or visible sagging between supports.
6. Straight runs of pipe shall be supported on maximum intervals (in feet) as follows:

Pipe Size in inches	Maximum Interval for PVC	Maximum Interval for Steel
1/2	4	6
3/4	4	7
1	5	8
1-1/2	5	10
2	5	10
2-1/2	6	10
3	6	10
4	7	10
6-12	8	12

7. Extra supports shall be provided as required to account for equipment vibrations and thermal expansions.
8. Where indicated or directed by ENGINEER, exposed piping and tubing carrying liquid shall be sloped as necessary to permit complete draining. Pipe deflection between supports shall be considered when determining the slope required to permit complete drainage.
9. Open ends of pipe columns used for support shall be completely covered with 1/4-inch thick plate or angle leg welded in place.
10. Vertical piping shall be supported as shown or required to prevent buckling or swaying utilizing special brackets.
11. Provide a support within 18-inches of each elbow and within 24-inches of each equipment connection including valves and blower skid. Equipment connections shall not be used to support pipe.
12. On PVC and insulation finished with a jacket, a 1/8-inch thick sheet of neoprene shall be provided between the pipe or insulation and the support.
13. Hangers shall be selected to fit around insulation.
14. Before installation, all pipe supports shall be coated to prevent corrosion.
15. Unless otherwise shown, piping shall not be fastened to a support in such a manner that would prevent axial movement due to thermal expansion and contraction.
16. Unless otherwise noted, piping dimensions shown on the Drawings are for reference only and shall be verified by CONTRACTOR.

C. Installation - Horizontal Piping

1. Provide all necessary steel angles, UniStrut, and other items required to maintain the minimum support spacing.

2. Pipe supports for horizontal piping supported on concrete floors and on concrete bases shall be adjustable pipe saddle support with U-bolt and screwed floor flange. Bolt floor flange to floor and bases utilizing all bolt holes, use foam glass inserts at all saddles, sleeves, etc.
3. Piping shall be arranged to minimize disruption of walkways.

D. Installation - Pipe Supports for Vertical Piping: Supports for all pipes shall fit directly around the pipe, except that on insulated pipes, the support shall be insulated and provided with vapor barrier.

E. Supplemental Steel

1. All supplemental steel shall be fabricated in accordance with the requirements of the AISC Manual of Steel Construction and the Standard Building Code.
2. No flame cutting of galvanized steel members will be permitted.
3. All galvanized surfaces damaged or exposed by cutting or drilling shall be resurfaced in accordance with ASTM A780.

3.02 SURFACE PREPARATION AND SHOP PAINTING

A. Fabricated pipe supports and accessories shall be cleaned and shop primed.

B. Prior to application of coatings all surfaces must be free of oil, grease, dirt, dust and other contaminants. Solvent clean the surfaces to remove oil and grease. Prepare to a SSPC-SP6 Commercial Blast Cleaning. Remove dust and blast products with high pressure air, vacuum cleaning or brushing. All air and blasting material shall be free of oil and grease.

C. Perform surface preparation only when relative humidity is less then 85%.

D. Apply surface coatings within 24 hours after blasting.

E. Adhere to the surface coating supplier's written recommended limit for application temperatures and moisture. Apply coatings in a dust free environment.

F. Exterior steel surfaces, supports, members, and parts shall receive two (2) coats of high build polyamide epoxy coating in strict accordance with supplier's recommendations and as favorably reviewed by the ENGINEER. Coating shall match building exterior. Coating shall be satisfactory for exterior use in a marine environment. Coating shall be able to withstand operating temperatures from -40° to 225° F. Coating system shall include one coat of primer and one coat of finish. Dry mil film thickness shall be between 3.0 to 6.0 mils unless otherwise specified by coating supplier. Store all coating products in a temperature controlled climate in accordance with the supplier's written instructions.

*****END OF SECTION*****

DIVISION 16

SECTION 16000

ELECTRICAL – GENERAL PROVISIONS AND LIGHTING

PART 1 GENERAL

1.01 DESCRIPTION OF WORK

A. These specifications and accompanying Contract Drawings are intended to cover the provision of all labor, material, and equipment necessary for the required electrical work for the complete installation of the SVE system described herein and in other Sections of these Specifications. This Section describes the minimum requirements for the CONTRACTOR to provide all labor, materials, and equipment for the following:

1. Wiring, conduit, distribution and metering equipment, and other materials to provide electric power from PECO pole along Phoenixville Pike, along the access road to the blower control panel, motors, lighting, and other equipment.
2. Providing and installing all wiring and conduit necessary to install the instrumentation and controls to be provided by the CONTRACTOR.
3. Provide temporary power as required to construct the Work.
4. Provide and install electric service feeder.
5. Provide and install telephone service.
6. Install transformer foundation.
7. Coordinate connections with utility service providers.

B. Furnish and install all appurtenances and elements for complete functioning systems, whether or not specifically indicated on the Contract Drawings or in the Technical Specifications. Provide services and equipment as specified in the Contract Documents.

C. The electrical system shall be designed to provide:

1. Safety and reliability.
2. Code compliance. The system and installation shall conform to the most recent published versions of the National Electrical Code (NEC), National Electrical Safety Code (NESC), and other applicable codes under Article 1.02 herein.
3. A system of well coordinated protection devices.
4. Efficiency of operation, including minimization of voltage drops.
5. Convenience of operation. Controls and monitoring devices necessary for normal operation of electrical equipment shall be clearly identified and readily accessible.
6. Ease of maintenance.

    a. System shall be designed to allow as many elements of the electrical system to be serviced and maintained without disrupting operations.

b. Access to electrical equipment and devices shall be maintained and working clearance provided per NEC Article 110 and the NESC.

7. The service size, short circuit rating, and upstream protective device must be field verified prior to the preparation of submittals and the purchase of equipment.

D. All above- and below-grade conduit from the transformer to and including the SVE blower building and SVE well field shall be galvanized steel. All conduit within the gas pipeline right of way shall be rigid galvanized steel conduit.

E. Conduit from PECO pole to the gas pipeline right of way shall be either galvanized steel or PVC conduit.

F. Electric service feeder shall be installed with a minimum of 36 inches of cover.

G. Where electric service feeder cannot be installed with a minimum of 36 inches of cover, the conduit shall be encased in concrete with a minimum of 3 inch thickness on all sides.

H. All electrical connectors and conductors shall be copper.

1.02 CODES AND REGULATIONS

A. The CONTRACTOR shall comply with the latest editions of the following authorities, including all supplements thereto and any other authority having jurisdiction within the requirements of this specification.

1. Local Codes
2. National Electrical Code (NEC) as amended (NFPA No. 70, 71, 72, 72C)
3. Occupational Safety and Health Association (OSHA)
4. Building Officials and Code Administration International (BOCA) Code
5. National Fire Protection Association (NFPA)
6. Underwriters Laboratories (UL)
7. Factory Mutual (FM)
8. ANSI, National Electric Safety Code (NESC)
9. Philadelphia Electric Company (PECO)

B. Whenever drawings or specifications require materials, workmanship, arrangement or construction of higher standard or larger size than is required by codes and regulations - drawings and specifications shall take precedence.

C. Should there be direct conflict between above-mentioned Codes, Laws and Regulations and Contract Drawings or Specifications, Codes Laws and Regulations shall govern.

D. All electrical materials and equipment shall bear label of Underwriter's Laboratories; listed by them in their list of electrical fittings; and approved by them for purpose for which they are to be used, unless material and equipment is of type for which Underwriter's Laboratories do not list or provide label service.

1.03 SUBMITTALS

A. Submit supplier's product data for all electrical components including:

1. Service and distribution panels
2. Branch surge protection
3. Wire, conduit and associated fittings
4. Circuit breakers
5. Power conditioners
6. Transformers
7. Disconnect switches
8. Panels and enclosures

B. Samples - Not Required

C. O&M Manual

1. Provide supplier's installation and Operation and Maintenance manuals for each electrical component.
2. CONTRACTOR shall include an as-built electrical system showing:

a. Power sources, including voltages and available short circuit currents.
b. Size, type, capacities, number of conductors, and cable schedule ID number for power cables.
c. Capacities, voltages, impedance, connections, and grounding methods of transformers.
d. Identification and quantity of protection devices.
e. Current transformer and potential transformer ratios.
f. Type and location of surge arresters and capacitors.
g. Identification of all equipment and loads.
h. Identification of other distribution system equipment.
i. Schedule of connected loads, normal operating loads, and maximum demand, including lighting.
j. Motor control equipment

D. Provide as-built drawing of underground electric service conduit from PECO pole to and including gas pipeline crossing.

E. Submit above in accordance with Section 01300.

1.04 ENCLOSURE TYPES

A. Electrical enclosures shall have the following ratings for the areas as depicted on the drawings:

1. NEMA 7 for enclosures in the room inside the blower building containing the SVE blower system.
2. NEMA 4X for enclosures outside the SVE blower system building, or inside the control room of the blower building (adjacent to the room containing the SVE system).

PART 2 PRODUCTS

2.01 CONDUIT FITTINGS

A. Materials shall conform to the NEC and be suitable for the location they are installed in. Provide suitable hot-dip galvanized steel, as manufactured by Appleton, Crouse-Hinds, O.Z. Electric, or Thomas & Betts.

B. Use only hot-dip galvanized fittings, for elbows, unions, receptacle and switch boxes; type FS or FD, manufactured by Appleton, Crouse-Hinds, O.Z. Electric, or Thomas & Betts.

C. All conduit, fittings, and connections shall be water tight.

D. Insulated Bushings: Plastic, fiber, or bakelite insulating rings molded into hot-dip galvanized malleable iron threaded bushings.

2.02 JOINING AND SEALING OF CONDUIT

A. Use conductive thread lubricant on all field threaded connections, apply to male thread only.

B. Install conduit with fittings, boxes, and accessories of type required and in manner to prevent intrusion of moisture. Seal all terminal ends of service conduits and bushings with favorably reviewed insulating sealing compound.

C. Install and effectively seal all underground conduits within 12 inches of point of penetration of ground surface, using approved conduit seal fittings, fiber and compound, in accordance with applicable NEC and NFPA requirements.

2.03 JUNCTION AND PULL BOXES

A. Where required for proper execution of work, provide all junction and/or pull boxes, each of proper size, gauge (not less than #12 gauge) and type for location and use, complete with screw covers of size convenient and adequate for proper installation of required number of cable or wires, to conform with code requirements. Provide adequate pull boxes for future pulling and removal of wires. No more than 200 feet of conduit shall be installed below grade without a pull box, with the exception of electric service feeder.

2.04 HANGERS AND SUPPORTS

A. Use only special devices specifically designed and manufacturing for hanging and support of conduit and cable, as manufactured by Appleton Electric Co., Steel City Electric Co., Thomas & Betts Co., or F&S Mfg. Corp., or Unistrut.

B. For support of all conduit, cable, cable troughs, junction and pull boxes, and outlet boxes, which are not built in walls or floors, provide favorably reviewed types of wall brackets, ceiling trapeze hangers, pipe straps hangers, clevis hangers or side-lock hangers.

C. Support horizontal and vertical conduit runs of conduit at intervals required by Code. Do not use hangers accommodating piping of other trades. Conduits shall not be supported from piping.

D. Secure all hangers and supports by means of inserts to concrete slabs; "C" clamps to structural steel members; toggle bolts in hollow masonry units; rawl plugs in concrete, brick, or solid masonry walls.

2.05 WIRE

A. 15 KV Shielded Cable

1. Single conductor, size determined by the CONTRACTOR unless a size is shown on the Contract Drawings, Class B stranded copper.
2. Construction shall be as follows:

    a. Stranded copper conductor, compacted or non-compacted.
    b. Non-conducting extruded stress control layer over conductor. Layer shall be free stripping.
    c. Ethylene propylene rubber insulation; 133 percent insulation level.
    d. Semi-conducting extruded insulation shield layer, free stripping.
    e. Annealed copper tape shield.
    f. Chlorosulfonated polyethylene jacket.
    g. Manufacturer and conductor size and class shall be stamped on cable jacket.

B. 600V Cable:

1. All wiring smaller than No. 4 AWG shall have type THWN insulation. No. 4 and larger wire shall have XHHW or EPR insulation. EPR insulation shall have PVC or CPE outer jacket.
2. All wiring shall be copper, having 600 volt insulation. Wiring for light, power, or controls shall not be smaller than #12 AWG. Size equipment wiring in accordance with codes.
3. All wire shall be copper. Aluminum wire will not be allowed.
4. Wire Manufacturer: Phelps-Dodge, General Cable, Triangle, Crescent Insulated Wire and Cable Company, or Essex Wire & Cable Co.

C. Instrumentation Cable:

1. Shall be single- or multi-twisted shielded pairs as recommended by instrument manufacturer.
2. Conductors shall be minimum #16 AWG, Class B stranded and tinned copper conductor.
3. Conductor insulation shall be flame retardant ethylene propylene.
4. Overall cable jacket shall be chlorinated polyethylene.
5. Twisted pairs shall be shielded with an aluminum/polyester laminated tape with a tinned copper drain wire.
6. Multi-conductor bundles shall have an aluminum/polyester laminated tape shield with tinned copper drain wire.
7. Insulation shall be rated 300 volts minimum.
8. Individual pair conductors shall be colored black and white with the overall pair number stamped on the insulation.
9. Manufacturer and conductor size shall be stamped on cable jacket.

D. Execution:

1. Identify all main feeders and branch circuits by color coded wire as required by Code.
2. Use powdered soapstone as lubricant. No more than 200 feet of conduit shall be installed without a pull box.
3. On all circuit wiring throughout, allow sufficient slack at splices and outlets to permit connections without straining generally not less than 6 inches in junction or outlet boxes and 10 inches in ducts, troughs or pull boxes.
4. Splicing Terminal and Tap Connections: Make joints and splices only in pull boxes, junction boxes and outlet boxes in mechanically and electrically secure manner using only approved solderless connectors and lugs, as approved by Code.
5. Make all terminal connections of mains and feeder circuits using approved high pressure clamping type solderless connectors.
6. Make all branch circuit terminal connections and splices using only 3M Scotchlok electrical spring connectors and insulate with Scotch or other approved plastic electrical tape, or by using nylon "Wing Nut Connectors" with internal spring tension grip insulated with favorably approved plastic electrical tape.
7. Ordinary wire nuts or porcelain type connectors are not acceptable.
8. Properly identify and tag all mains, feeders, and branch circuits in all pull boxes, gutters, troughs, junction boxes, and other areas in which they connect. Similarly, identify and tag wires where two or more circuits run to or pass through same outlet or junction box.
9. Install tags in all pull boxes, troughs, junction and outlet boxes, and in gutter of all panels, as wires are pulled.
10. All tags: Flame resistant linen, wired on, marked in indelible ink; in each case, bearing designation of feeder or circuit.
11. Uninsulated conductors shall be bare type ACSR.

2.06 GROUNDING

A. Equipment that contacts electrical equipment, circuits, or devices shall be grounded. Grounding and bonding shall be in accordance with the NEC and with the requirements of the governing utility. All exposed non-current carrying metallic parts of the electrical equipment, metallic raceway systems and neutral conductor of wiring systems shall include ground rods driven into ground. Ground rods shall be high-strength steel core, copper clad, a minimum 3/4-inch diameter by 10 feet length. Rods shall be UL listed and driven to 1 foot below grade. All grounding conductors shall be of copper. Ground conductors, connectors, and ground rods installed at grade level shall not protrude into passageways or become a tripping hazard.

B. Adequately ground all isolated conduit systems for low tension work.

C. See Section 16660 for additional grounding requirements.

2.07 NAMEPLATES

A. Provide nameplates for all control equipment or engraved laminoid; riveted in place. Nameplates shall be minimum one inch high with 1/2" lettering of length of lettering plus 1/2" each side.

2.08 MOTOR CONTROLLERS AND STARTERS

Unless specified under other Sections, all motor controllers and starters shall be as follows:

A. Where equipment is installed by Equipment Vendor, provide power and control wiring and terminate all shipping split wiring.

B. Controllers and starters shall be full voltage magnetic having thermal overload protection and neon pilot lights.

E. Provide all starters with at least two auxiliary contacts, one normally open and one normally closed in addition to holding circuit contacts and an isolated alarm circuit contact on overload relay.

D. Coils shall be rated for 120 VAC.

E. All control circuits shall be 120 VAC.

F. Nameplates: Provide engraved laminoid laminated plastic nameplates for all starting equipment, clearly identifying equipment related thereto. Size as defined in 2.07.

G. Manufacturer: "Square D" Model 6.

2.09 RACEWAYS

A. General use rigid galvanized steel conduit shall be used for all raceways up to eight feet above finished floor or in masonry construction, or any exposed raceways in the electrical equipment rooms.

B. Thin wall electrical metallic tubing (EMT) may be used in all other areas over eight feet above finished floor or in partitions and other spaces where not passing through or buried in concrete and where not in wet locations or other locations prohibited by Code.

C. Prior to pouring of concrete, all rigid conduit risers shall be protected with 2 coats of Bitumastic compound, form a point 12 inches below grade to not less than 6 inches above grade or the surface of concrete.

D. Do not install conduit, which has been crushed or deformed in any way.

E. Cap or plug conduit ends as soon as possible after installation and let remain so until just before installation of wires. Ream all conduits and remove burrs. Double-lock-nut-and-bush conduit where entering boxes, fittings or cabinets, except at threaded hubs. All conduits shall enter outlet boxes or cabinets squarely. Where bushings larger than 1" are required, use insulating type. Minimum size conduit permitted: 3/4".

F. Exposed Conduit Construction: Install all exposed conduit in neat workmanlike fashion, after piping of other trades is in position, using square bends. Use access fittings at all external elbow locations.

2.10 DISCONNECT SWITCHES

A. Type: Heavy duty switch sized for load serviced; non-fusible where used purely as disconnect device. Provide the proper number of poles and a solid neutral where required.

B. Fuses: Where fused switches are required and where the fuse type is not indicated on the drawings, provide Type FRS fuses for 480 volt systems or type FRN fuses for 240 or 208 volt systems, where both are rated 600 amps or below.

C. Shall be rated 240 VAC or 480 VAC as required.

2.12 TRANSFORMERS

The CONTRACTOR shall provide transformers, as needed, at the SVE system for equipment being powered from that location . Manufacturer shall be ACME.

A. Dry Type Transformers:

1. Enclosure to be NEMA 1 ventilated.
2. Transformer insulation shall be rated for 220 degrees C with temperature rise of transformer to be 115 degrees C at rated KVA.

3. Core and coil assemblies shall be mounted on rubber isolation pads.
4. Transformers shall have 6-2½ percent taps (2 above nominal and 4 below).
5. CONTRACTOR shall determine voltage ratings and KVA capacity for favorable review by ENGINEER.
6. Continuous emergency overload capability shall be 15 percent.

2.13 FLEXIBLE METAL CONDUIT AND FITTINGS

A. Oil and moisture tight galvanized steel flexible conduit with copper bonding conductor and synthetic rubber jacket; "Sealtight" as manufactured by American Brass Co., or favorably reviewed equal, complete with ground bushings.

B. Fittings: Appleton Series "AT" fitters, unions, elbows, gaskets and locknuts, or favorably reviewed equal.

2.14 OUTLET BOXES

A. Except as otherwise specified, provide stamped steel boxes of proper size gauge and type for each location and use; securely fastened in place not supported by conduit. Exposed boxes: cast FS or FD type. Provide fixture studs in boxes, where required. Mounting height shall be a minimum of 3 feet above finished floor.

B. Manufacturers: Appleton, Crouse-Hinds, Steel City, Rayco or J.R. Richards.

C. Receptacles shall be 2 wire, 3 pole, with one pole permanently grounded to conduit system. Receptacles to be a minimum 20 amps.

2.15 SPARE PARTS

A. The CONTRACTOR shall furnish two (2) sets of fuses and lights for each type and size.

PART 3 – EXECUTION

3.01 COORDINATION OF WORK BY CONTRACTOR

A. CONTRACTOR is responsible to coordinate the installation of telephone cable by contacting Mr. Anthony Fego of Verizon (610.647.9712) with three business day notice.

B. CONTRACTOR is responsible to coordinate connection to PECO by contacting the Coatesville Construction Office. Connection details have been approved by PECO under application made by ENGINEER.

C. All activities preformed within the Transco Gas Pipeline right of way, shall be conducted under direct supervision of a Transco Representative. A minimum of 3 days notice shall be given to the Transco Representative at 1-800-644-7373.

D. CONTRACTOR shall coordinate construction along the access road to the Lupo Residence to provide uninterrupted access. This may consist of but not limited to, steel cover plates, hours of work, or realignment of construction.

3.02 WORK BY CONTRACTOR

A. Conduit for power and control wire for the SVE system shall be installed using hangers and supports on floors, walls, or ceiling as appropriate to provide properly and neatly installed conduit that maximizes access to SVE equipment.

B. Power and instrumentation and control wires shall be run in separate conduits. Power and control wiring to one motor shall not be combined in the same conduit with wiring to another motor. Temperature detectors and 120-volt signals shall be run in separate conduit from other control wires. All instrumentation and control wire, except 120-volt signals, shall be shielded. The final 6 to 8 inches of conduit prior to connection to instrumentation, controls and equipment shall be made with flexible metal conduit.

C. Furnish, install and maintain a temporary electrical service, if required, and wiring system from start to completion of construction. This shall cover the standard workday in all trades.

D. Rotating equipment shall not be started until bearings have been properly lubricated and all testing and checks have been satisfactorily completed.

3.03 QUALITY ASSURANCE/QUALITY CONTROL

A. CONTRACTOR shall provide 3rd party Electrical Inspection and Certification for electric service.

B. Prior to the turning over of work as complete unit, test all wiring installed under this contract for proper connections, short circuits and grounds. Conduct tests with aid of suitable testing instruments, and submit results to ENGINEER.

C. Provide test results that demonstrate that the resistance to ground for the grounding system is not more than 5 ohms.

***** END OF SECTION *****

SECTION 16502

LIGHTNING PROTECTION SYSTEM

PART 1 - GENERAL

1.01 DESCRIPTION OF WORK

A. The CONTRACTOR shall furnish all materials and labor, tools, plant, and equipment required to design, furnish and install a complete system of lightning protection for the stack, blower building, and well head valve building, as required by the contract documents and required by the work to be done.

B. Items of work required shall include, but are not necessarily limited to, the following:

1. Air terminals and interconnecting conductors.
2. Grounding and bonding needed for lightning protection.

1.02 SYSTEM DESCRIPTION

A. The lightning protection system shall be in accordance with the latest edition of Lightning Protection Code (NFPA 78) U.L. 96A, and ANSI/LPI 175 and 176 code requirements, and shall consist of air terminals on roof of the treatment building and on top of the stack, bonding of structure, and other metal objects, grounding electrodes, and interconnecting conductors.

B. The lightning protection system shall be furnished and installed with Class I materials per the provisions of NFPA 78.

C. Underwriters Laboratories Master Label shall be furnished as evidence that the installation has met with U.L. requirements.

1.03 SUBMITTALS

A. Complete installation details and product data submitted as part of the CONTRACTOR'S Final Detailed/Construction Submittal shall include, as a minimum, the following:

1. Shop drawings showing layout of air terminals, grounding electrodes, and bonding connections to structure and other metal objects, including the sizes of all constituent components, and details of connection and termination.
2. Product data complete with material descriptions and physical dimensions of each component, as well as listing of each component per ANSI/UL 96.
3. Installation instructions and guidelines.

B. The CONTRACTOR shall prepare and submit "as-built" drawings as part of the CONTRACTOR'S Record Drawing Submittal, showing the actual locations of air terminals, grounding electrodes, bonding connections, and routing of system conductors.

1.04 REFERENCE STANDARDS

A. American National Standards Institute/Lightning Protection Institute (ANSI/LPI).

1. ANSI/LPI 175.
2. ANSI/LPI 176.

B. National Fire Protection Association (NFPA).

1. NFPA 78-1986 - Lightning Protection Code.

C. American National Standards Institute/Underwriters Laboratories, Inc. (ANSI/UL).

1. ANSI/UL 96-1981 - Safety Standard for Lightning Protection Components.

D. Underwriters Laboratories, Inc. (UL).

1. UL 96A - Installation Requirements for Lightning Protection Systems.

1.05 QUALITY ASSURANCE

A. The lightning protection equipment furnished under this Section shall be the product of a MANUFACTURER who has produced the same type of protective system for a period of at least 10 documented consecutive years, and who is a member of the Lightning Protection Institute.

B. The lightning protection equipment shall be installed by an authorized installer of the MANUFACTURER, with a minimum of 3 years documented experience.

1.06 SEQUENCING AND SCHEDULING

A. All work of this Section shall be coordinated with other trades engaged in roofing, and in interior and exterior installations.

1.07 CERTIFIED INSTALLERS

A. The CONTRACTOR shall engage the services of an experienced firm specializing in this type of work and certified by Underwriters' Laboratories, Inc.

PART 2 – PRODUCTS

2.01 MATERIALS

A. All components of the lightning protection system shall be in accordance with ANSI/UL 96. Air terminals shall be as specified hereinafter. All materials shall be Class I.

B. Air terminals shall be of material and diameter shown on the contract drawings, and extending not less than 24 inches above the object which they protect.

C. Lightning grounding rods shall be copper-clad steel electrodes, 1-inch diameter, 10 feet long.

D. Conductors shall be as required to protect the equipment.

E. Ground plates, if used, shall be copper.

F. Connectors and splicers shall be standard approved type.

G. Conductor fasteners shall be an approved type of non-corrosive metal having ample strength to support conductor and shall be spaced on maximum 3-foot centers.

PART 3 – EXECUTION

3.01 EXAMINATION

A. Before commencing installation, the CONTRACTOR shall verify the following:

1. Surfaces are ready to receive work.
2. All field dimensions are as shown on the shop drawings.

B. Commencing installation implies acceptance of existing conditions by the CONTRACTOR.

3.02 PROTECTION OF SURROUNDING ELEMENTS

A. All elements surrounding the work area specified under this Section shall be effectively protected from damage and/or disfiguration.

3.03 INSTALLATION

A. All installation shall be in accordance with the instructions of the MANUFACTURER and in compliance with all applicable rules and provisions of UL 96A and NFPA 78.

B. Air terminals shall be furnished and installed with proper base supports for the surface on which they are used, and shall be securely anchored to the protected surface.

C. Conductors shall be coursed to provide a two way path to ground from each air terminal.

D. Furnish and install down conductors as evenly distributed as possible on outer walls of building.

E. Lightning grounding rods shall be driven to a minimum depth of 10 feet, and more if necessary, to reach permanent moisture. In case of rock ledge or other conditions making it impossible to comply with the above, trench or other grounding will be permitted, providing it meets U.L. requirements.

F. Furnish and install necessary common bonding between the lightning protection system, electric grounding system, and underground metallic water piping systems.

G. All ungrounded sizeable metallic objects within 6 feet of the system, or metal connected to the system, shall be bonded to the system with approved fittings and conductor. Connections between dissimilar metals shall be made with approved bimetallic connectors.

3.04 FIELD QUALITY CONTROL

A. The complete installation shall be inspected and certified by a representative of the Underwriters' Laboratories under provisions of UL 96A, and after acceptance, a U.L. Master Label shall be issued. The U.L. Master Label shall be attached to the building at the location as directed by the ENGINEER.

**** END OF SECTION ****

SECTION 16660

GROUNDING SYSTEM

PART 1 – GENERAL

1.01 DESCRIPTION OF WORK

A. The CONTRACTOR shall furnish all materials and labor, tools, plant, equipment, and incidentals required to design, furnish and install a complete grounding system in strict accordance with Article 250 of the National Electrical Code (NEC), as required by the contract documents and required by the work to be done.

B. All raceways, conduits, and ducts shall contain equipment grounding conductors sized in accordance with the NEC. Minimum size shall be #12 AWG.

1.02 REFERENCE STANDARDS

A. National Electrical Code (NEC)

B. Underwriters Laboratory (UL)

1. UL 467

PART 2 - PRODUCTS

2.01 MATERIALS

A. Ground rods shall be a minimum 3/4-inch diameter by 10 feet copper clad steel and constructed in accordance with UL 467. The minimum copper thickness shall be 0.25 mm millimeters. Ground rods shall be Copperweld or approved equal.

B. Grounding conduit hubs shall be malleable iron type similar to Thomas and Betts Co. Cat. No. 3940, ¾-inch conduit size; Burndy; O-Z/Gedney Co.; or approved equal, and of the correct size for the conduit.

C. Waterpipe ground clamps shall be cast bronze saddle type, similar to Thomas and Betts Co. Cat. No. 2; Burndy; O-Z/Gedney Co.; or approved equal, and of the correct size for the pipe.

D. The ground grid shall consist of a buried 250 kcmil bare stranded copper cable of not less than 98 percent conductivity at 20 degrees Centigrade.

E. Buried grounding connections shall be by Cadweld process, or accepted equal exothermic welding system.

F. Ground wire connections to structural steel columns shall be made with long barrel type one-hole heavy duty copper compression lugs, bolted through ½-inch maximum diameter holes drilled in the column web, with stainless steel hex head cap screws and nuts.

PART 3 – EXECUTION

3.01 INSTALLATION

A. Grounding electrode conductors shall be buried at a depth of not less than 18 inches below finished grade. Grounding cables that penetrate equipment slabs shall be run in Schedule 80 PVC conduits.

B. Equipment grounding conductors shall be run with all feeders and in all conduits.

C. Conduits stubbed into equipment, such as motor control center, shall be fitted with insulated grounding bushings and connected to the equipment ground bus. Boxes mounted below or above motor control center shall be bonded to the equipment ground bus. The grounding wire shall be sized in accordance with Table 250-95 of the NEC, except that a minimum No. 12 AWG shall be used.

D. Liquid-tight flexible metal conduit in sizes 1½-inch and larger shall have bonding jumpers. Bonding jumpers shall be external, run parallel (not spiralled), and fastened with plastic tie wraps.

E. All transformers not provided with neutral grounding resistors shall have their neutrals grounded to the nearest available grounding electrode with a conductor sized in accordance with Article 250-94 of the NEC.

F. All equipment enclosures, motor and transformer frames, conduits systems, cable armor, exposed structural steel, and all other equipment and materials required by the NEC to be grounded, shall be grounded and bonded in accordance with the NEC.

G. Exposed connections between different metals shall be sealed with No-Oxide Paint Grade A or approved equal.

H. All underground conductors shall be buried not less than 18 inches below finished grade and laid slack, and where exposed to mechanical injury, shall be protected by pipes or other substantial guards. If guards are iron pipe or other magnetic material, conductors shall be electrically connected to both ends of the guard. Connections shall be made as hereinbefore specified.

I. Care shall be taken to ensure good ground continuity, in particular between the conduit system and equipment frames and enclosures. Where necessary, jumper wires shall be installed. A code sized equipment grounding conductor shall be included in all conduits and bonded to equipment frames at each end.

J. All grounding type receptacles shall be grounded to the outlet boxes with a #12 THW green conductor connected to the ground terminal of the receptacle, and fastened to the outlet box by means of a grounding screw.

3.02 TESTS

A. In addition to the requirements of Section 16000, test the resistance of the ground-grid system. All test equipment shall be provided under this Section and as approved by the ENGINEER. Dry season ground-grid resistance of the system shall not exceed 5 ohms. If such resistance - values cannot be obtained with the systems shown, provide additional grounding as approved by the ENGINEER.

**** END OF SECTION ****

SECTION 16930

CONTROL SYSTEM

PART 1 – GENERAL

1.01 DESCRIPTION OF WORK

A. The CONTRACTOR shall provide a complete Control System as described in this section and as shown on the Contract Drawings. The Control System shall be provided by one supplier termed the SVE VENDOR selected to provide the SVE Blower System (Section 11510) or a qualified subcontractor of the SVE VENDOR.

B. The SVE VENDOR shall provide a complete Control System that shall include all hardware, control panels, software, and instruments and transmitters not provided by others for operating and controlling the Soil Vapor Extraction (SVE) system as shown on the Contract Drawings. The Control System shall monitor and control equipment including interfacing with control panels, instruments, and controllers.

C. The Control System shall include a modular Programmable Logic Controller (PLC) and alarm dialer capable of receiving and sending both analog and digital variables, recording process data, and indicating alarms both locally and remotely. The PLC shall be designed with sufficient capacity for the addition of future items as indicated on the Process and Instrumentation Diagram (P&IDs).

D. The CONTRACTOR shall furnish all materials and labor necessary to install wire and integrate the SVE VENDOR's Control System with various process equipment and instruments (i.e., SVE blower system, total hydrocarbon analyzer, heat exchanger, etc.).

E. The SVE VENDOR shall provide all labor and materials for the programming of the PLC and related components.

F. The SVE VENDOR shall coordinate the construction of the Control System with the construction of instruments and transmitters to be provided by other's including equipment specified in Section 11510.

G. The SVE VENDOR shall provide all equipment and labor necessary to start-up the Control System.

H. This Section specifies the minimum requirements for the Control System. The CONTRACTOR shall provide any additional equipment that is required to provide a complete system that operates as described in this Section and shown on the Contract Drawings.

1.02 DEFINITIONS

A. Instrument Manufacturer: Manufacturer of process control instrumentation such as recorders, controllers, indicators, and associated electronic accessories.

B. SVE VENDOR: Company chosen to supply the SVE Blower System, who is also qualified to design, program, manufacture, procure, start-up, and service the Control Systems. Definition also applies to a subcontractor to the SVE VENDOR who is qualified to design, program, manufacture, procure, start-up, and service the Control Systems.

1.03 CODES AND REGULATIONS

A. Comply with the latest editions of following works, including all supplements hereto, all Laws and Regulations, and any other authority having jurisdiction within the requirements of this specification.

1. Local Codes
2. National Electrical Code (NEC)
3. National Fire Protection Association (NFPA)
4. Uniform Fire Code
5. Factory Mutual (FM)
6. Underwriter's Laboratory (UL)
7. Occupational Safety and Health Association (OSHA)
8. Uniform Building Code (UBC)
9. American Society of Mechanical Engineers (ASME) and American Society of Testing and Materials (ASTM) Standards for Materials of Construction
10. American Society of Civil Engineers (ASCE)
11. Illuminating Engineers Society (IES)

B. Whenever drawings or specifications require materials, workmanship, arrangement or construction of higher standard or larger size than is required by codes and regulations then drawings and specifications shall take precedence.

C. Should there be direct conflict between above-mentioned Codes and Regulations and the Contract Drawings or Specifications, the above Codes and Regulations shall govern.

D. All electrical materials and equipment shall bear the label of Underwriter's Laboratories listed by them in their list of electrical fittings; and approved by them for the purpose for which they are to be used, unless material and equipment is of type for which Underwriter's Laboratories do not list or provide label.

1.04 SUBMITTALS

A. General:

1. Submit following information tabulated in booklet form for each piece of equipment or system furnished under this section.
2. The CONTRACTOR shall review and certify all submittals prepared by the SVE VENDOR prior to submittal to the ENGINEER.

B. SVE VENDOR shall submit, if necessary, the name of the qualified firm to be subcontracted to perform the Work specified in this Section.

C. Preliminary Process Design Submittal

Submit system design information to the ENGINEER for approval. System design information shall include:

1. Revised Process and Instrument Diagram and legend sheet.
2. Loop by loop system instrument and control schematics showing terminal-to-terminal interconnections between related panels, field instruments, dialers, PLCs, computers, and other components.
3. Prior to final configuration submit ladder logic, data highway and graphics configuration including printouts of each graphics screen.

D. Final Process Design Submittal

1. Instrumentation and Controllers:

Submit the following information for each temperature transmitter, flow transmitter, level switches, pressure transmitter, and other instrumentation and controllers, including instrumentation and controllers provided by others. The CONTRACTOR shall be responsible for providing information for components being provided by others to the SVE VENDOR such that the SVE VENDOR may provide a complete submittal.

a. Instrument tag number.
b. Instrument manufacturer's name.
c. Instrument manufacturer's serial number.
d. Instrument manufacturer's model number.
e. Equipment supplier's cutsheets.
f. Related piping, electrical, dimension, and installation details.
g. Parts list.
i. Spare parts list.
j. Product data:

(1) Construction materials.
(2) Ranges.
(3) Output/Input signals.
(4) Accessories.
(5) Mounting fittings.
(6) Interconnect reference for associated field and panel instruments as provided by Instrument Manufacturer or other suppliers of packaged systems.
(7) Instrument manufacturer's specification sheets.

2. Control Panels:

The CONTRACTOR shall submit the following information for the equipment control panels:

a. Detailed Panel Enclosure Layout. Panel enclosure layout shall show front, back, and side views. The panel enclosure layout shall be dimensional and show the location and size of all latches, locks, disconnect switches, alarm lights, mounting brackets, lifting lugs, and other items.

b. Detailed Panel Face Layout Drawing. Provide detailed panel face layout drawings for each control panel. Panel face layout drawings shall show the location of each display, controller, control switch, indicating light, label, and other operator interfaces. The drawings shall be dimensionalized and show the size of each component.

c. Detailed Panel Layout Drawing. Detailed panel layout drawings shall show the location of each breaker, relay, heater, transformer, terminal strips, cable trays, and other components. Terminal strips for field connections shall be clearly denoted.

d. Detailed Wiring Diagrams. Detailed wiring diagrams shall include point to point wiring information and include a wiring and numbering system. All field connections shall be clearly denoted.

e. Submit supplier's product data for all controls and electrical components. Supplier's product data shall include enclosure rating, electrical classification, U.L. listing, temperature and humidity operating ranges, component description, materials of construction, power requirements, contact ratings, programming capabilities, output ratings, memory, display type, and other functions associated with the component. Provide supplier's product data for each component provided including but not limited to the following:

(1) Displays.
(2) Switches, push buttons, lights, etc.
(3) Panel enclosures.
(4) Relays.
(5) Power conditioners.
(6) Power and control transformers.
(7) Panel heaters.
(8) Circuit breakers, fused disconnect switches.
(9) Other electrical components as specified in this Section.

3. Programmable Logic Controller System:

Prior to fabrication submit to the ENGINEER for favorable review supplier's product data for the following:

a. PLC including manufacturer's name, manufacturer's model number, number of input/output parameters, available memory, power requirements, environmental ratings, and speed.

b. Input/output modules.

c. Related components, including datalogger and alarm dialer, including manufacturer's name and model, and summary of capabilities.

4. Recommended Spare Parts List.

E. Operation and Maintenance (O&M) Manual:

1. Provide Draft O&M Manual prior to start-up. Provide final O&M Manual after start-up. Operations manual shall include written procedures and printouts of all PLC programs, software setpoints and configuration parameters, instrument calibration ranges, and a detailed troubleshooting guide. Include recommended maintenance and calibration schedules.
2. Submit record documents of all information provided under Part 1.04C.
3. Provide supplier's product data, Installation, and Operations Manuals, as available, for each component listed in 1.04D.1 and 2.e. The CONTRACTOR shall be responsible for providing information for components being provided by others to the SVE VENDOR such that the SVE VENDOR may provide a complete submittal.
4. Provide two electronic (disk) back-up copies of software and PLC programs.

PART 2 – PRODUCTS

2.01 SCOPE OF WORK

A. SVE VENDOR

The SVE VENDOR or qualified SVE VENDOR subcontractor shall design, program, procure, and start-up the Control System. The SVE VENDOR shall provide the following services:

1. Detailed drawings for the installation of the Control System. Installation drawings shall provide sufficient information for the CONTRACTOR to install the field instruments, control panels, PLC, data logger, alarm dialer, wiring, and other components needed to provide a complete Control System. Installation drawings shall include, but not be limited to, instrument and control loop drawings, instrument installation and mounting details, and control panel installation and mounting details.
2. Fabrication of Control Panels. The SVE VENDOR shall provide detailed drawings, including ladder logic diagrams, panel face layout, enclosure layout, panel layout, and wiring diagrams for the fabrication of the control panel. The CONTRACTOR shall provide QA/QC services to inspect and test the control panels prior to shipment to the job site. The SVE VENDOR shall be responsible for all costs associated with design, procurement, fabrication, inspection, testing and shipping the control panels.
3. Procurement, Fabrication, and Programming of the PLC and related components. The SVE VENDOR shall provide detailed drawings including ladder logic, data highway, point-to-point wiring diagrams, and detailed enclosure drawings for the configuration of the PLC. The SVE VENDOR shall procure all hardware, enclosures, and software required to provide an integrated and operable system. The SVE

VENDOR shall program the PLC and related components to operate the Control System as presented on the drawings and described in this Section. The SVE VENDOR shall test all program loops and operation between the PLC, datalogger, modems, dialers, and displays. The SVE VENDOR shall be responsible for all costs associated with the design, procurement, fabrication, inspection, testing, and shipping of the PLC and other components. Testing shall be conducted in accordance with the Preliminary Operations and Maintenance Plan (Appendix H of the 100% Design Report).

4. Submittals. The SVE VENDOR shall be responsible for preparing all submittals as required under Part 1.04 of this Section. The SVE VENDOR shall provide submittals to the CONTRACTOR for submittal and favorable review by the ENGINEER. The CONTRACTOR shall be responsible for providing information for components being provided by others to the SVE VENDOR such that the SVE VENDOR may provide a complete submittal.
5. Procurement of Field Instruments. The SVE VENDOR shall be responsible for all costs associated with the selection, purchase, and shipment of field instruments not provided by others to the job site.
6. Start-Up and Training Services. The SVE VENDOR shall provide services for the start-up of the Control System and training of ENGINEER and/or OPERATOR.

2.02 SYSTEM DESCRIPTION

A. The Process and Instrument Diagram (P&ID) depicts the general control logic for the Control System. Each control loop is described in more detail in Table 16930-1.

B. The Control System shall consist of the following items:

1. One main control panel for equipment control and displaying instrument readings and alarm lights.
2. A Programmable Logic Controller (PLC) for monitoring and controlling the SVE system.
3. A Datalogger for recoding process data from the PLC.
4. An Alarm Dialer for dialing out alarm conditions detected by the PLC to an off-site operator.
5. A laptop/portable computer for downloading data from the datalogger.

C. Units that combine functions of PLC, datalogger, and/or alarm dialer may be used in place of individual components.

D. The Control System shall be controlled manually through the control panel and automatically through the PLC. There will be no permanent computer with graphic interfaces/screens to control the system.

2.03 CONTROL PANEL

A. The control panel shall be located inside the blower building and housed in a NEMA 4X enclosure. The control panel shall be located in a separate area than the SVE system, as shown on the Contract Drawings. All conduits between the SVE system and control room shall be sealed off.

B. The incoming power supply to the control panel shall be three phase/60 hertz/460 volt. Provide one 20 amp, 120 v ground fault circuit interrupter (GFCI) service outlet on the inside of the panel. Provide surge arrestors on all incoming power lines. Provide soft starter for blower motor starters to reduce inrush current. The control panel shall include all necessary electrical components as described in the Contract Documents.

C. The panel shall include all necessary power supplies, transformers and interlocks required for operation of the system as described herein.

D. Hand-Off-Auto selector switches shall be provided for both blowers and the total hydrocarbon analyzer, and hand-off-selector switch for the condensate transfer pump.

E. Provide two (2) hour meters: one for monitoring the operating time of each blower. Cumulative hours shall be displayed at the control panel.

F. Motor starters shall have overload relays with ambient compensated, quick trip characteristics sized for motors being used with manual reset. Starter shall have two auxiliary contacts minimum.

G. Provide a fused disconnect to de-energize complete control panel.

H. All control panels shall be designed in a logical manner. Panel layouts shall be organized in an orderly manner. Switches, push buttons, controllers, and other components shall be easily accessible and positioned to facilitate operator interaction. Electrical equipment and control components mounted inside the panel shall be arranged to be easily accessible, provide ease of maintenance, repair and replacement. Provide a minimum of 20% spare panel space (panel face and internals) for future equipment.

I. Interposing relays shall be Square D, Class 8501, Type R or favorably reviewed equal. Contacts shall be rated 5 amps or 120 VAC.

J. Control Switches shall be rated for 120 VAC and shall be heavy duty oil-tight, Square D, Type K, Class 9001, or favorably reviewed equal.

K. Indicating lights shall be of the transformer type, push-to-test with colored lens as required below:

"On"	=	Green
"Off"	=	Red
"Alarm"	=	Amber
"Panel Power On"	=	White
"Other Indicators"	=	Blue

L. Control terminal strips shall be Marathon series 300, 30 amps, 300 volt or favorably reviewed equal.

M. Surge protection. Each control panel shall be equipped with surge and lighting protection. Protection shall be in-line to the control power feed.

N. Internal panel wiring shall be a minimum of #12 AWG type THWN for power wiring and a minimum of #16 AWG for control. Analog cable shall be a minimum #18 AWG twisted shielded pairs with drain wire.

O. Control switches and indicating lights shall be logically grouped. Switches shall have a Hand-Off-Auto legend plate. Indicating lights shall have an ON or OFF legend plate. Each grouping of switches and lights shall have a black phenolic engraved nameplate with white lettering. Nameplate shall indicate equipment served. Nameplates shall be attached with stainless steel screws.

P. All 4-20 milliamp inputs from transmitters shall be wired through loop isolator modules.

2.04 PLC / DATA ACQUISITION

A. The PLC shall monitor and control SVE system in accordance with the P&IDs and Table 16930-1. PLC shall be sized to accommodate all current and future inputs and outputs shown on P&IDs. PLC shall be accessible for reprogramming when necessary.

B. The datalogger shall be capable of recording all process data transmitted via the PLC, as shown on the P&IDs. Datalogger shall have sufficient memory to record data at 1-minute intervals for 45 days. Recording frequency shall be operator adjustable. Datalogger shall be accessible for data downloading to a laptop computer.

C. The alarm dialer shall be capable of transmitting all process alarms indicated by the PLC, as shown on the P&IDs. Alarm dialer shall be capable of transmitting individual recordings of each type of alarm to an operator off-site.

D. A laptop/portable computer shall be used by the operator to periodically download data from the datalogger. SVE VENDOR shall provide ENGINEER for data downloading, software to generate trends, graphs and tables of the downloaded data.

2.05 INSTRUMENTS

A. The CONTRACTOR shall furnish all necessary instrumentation not provided by others to complete the treatment system as shown on the P&ID and listed in the Process Control Loop Summary Table, which includes, but is not limited to, the following:

1. Flow indicators/flow transmitters.
2. Pressure gauges/pressure transmitters.
3. Temperature gauges/temperature transmitters.

B. Instruments shall be compatible with the range of conditions that may be experienced. Operating ranges of instruments shall include the maximum and minimum conditions, while minimizing ranges that fall outside the maximum and minimum.

C. Instruments shall be heavy-duty, industrial grade components, compatible with its process operating environment. Instruments, or parts of instruments, in direct contact with the SVE vapor must have materials compatible with the VOCs expected to be present.

D. Instruments carrying electric current and in direct contact with the SVE vapor must be approved for Class I, Division 2, Group D locations or intrinsically safe. Instruments carrying electric current but not in direct contact with the SVE vapor are not required to have this rating (i.e. unclassified).

PART 3 - EXECUTION

3.01 FABRICATION AND SHOP TEST

A. SVE VENDOR shall fabricate and test entire control system in accordance with instrument manufacturer's and suppliers written instructions and favorably reviewed submittals. All wiring shall be in accordance with the all local, state and federal codes and regulations including the National Electric Code and the NFPA. Test control panel and control system prior to shipment. Test control logic and verify input/output signals are correctly programmed.

3.02 INSTALLATION

A. CONTRACTOR shall install Control System in accordance with SVE VENDOR's written instructions. CONTRACTOR shall install Control System in accordance with all local, state and federal codes and regulations including the National Electric Code and the NFPA.

3.03 FIELD QUALITY CONTROL

SVE VENDOR Field Services:

A. SVE VENDOR shall provide the services of a qualified service engineer to supervise and inspect equipment installation to ensure system is installed in accordance with instrument manufacturer's and system house recommendations. Service engineer shall field calibrate each piece of equipment on a loop-by-loop basis. Submit calibration certificate to ENGINEER for each piece of equipment. Test equipment used shall be calibrated to an N.B.S. traceable standard within the past 12 months. Test equipment model and serial number shall be listed on each calibration certificate. System House shall make adjustments necessary to place equipment into satisfactory operation in accordance with this Section. SVE VENDOR shall provide a minimum of 7 mandays, travel time excluded, and expenses for assistance of the CONTRACTOR during plant construction and start-up. CONTRACTOR shall be responsible for additional mandays if required.

B. SVE VENDOR shall provide a representative to be present at job site or classroom designated by ENGINEER for a minimum of 2 mandays, travel time excluded, for training of ENGINEER and OPERATOR personnel for plant operation

C. SVE VENDOR shall provide during first year service calls for troubleshooting and preventative maintenance and to make necessary adjustments on a no charge basis. CONTRACTOR shall include this in the operations bid.

***** END OF SECTION *****

TABLE 16930-1
PROCESS CONTROL LOOP SUMMARY

PID Tag Number	Control Description	Control Function
LSL-300	Low level switch for the Air/Water Separator (AWS-300) for detection of accumulated condensate in AWS-300.	• Upon the condensate level below LSL-300, the PLC shall: • Future – PLC shall turn condensate pump (P-300) off.
LSH-300	High level switch for the Air/Water Separator (AWS-300) for detection of accumulated condensate in AWS-300.	• Upon the condensate level reaching LSH-300, the PLC shall: 1. Illuminate a light (LAH-300) on the Control Panel; and 2. Initiate an alarm call on the Autodialer. • Future: PLC shall turn condensate pump (P-300) on.
LSHH-300	High-high level switch for the Air/Water Separator (AWS-300) to indicate an emergency high condensate level in AWS-300.	• Upon the condensate level reaching LSHH-300, the PLC shall: 1. Shut down the blowers (B-500 and B-600) and the total hydrocarbon analyzer (THA-700) via the shutdown interlock (I-550); 2. Illuminate an alarm light (LAHH-300) on the Control Panel; and 3. Initiate an alarm call on the Autodialer.
PT-450	Pressure transducer for the monitoring of the pressure (vacuum) on the suction side of the blowers, after introduction of dilution air.	• The output of PT-450 shall be wired to a pressure indicating transmitter (PIT-450) in the Control Panel for display of the pressure reading. • PIT-450 shall transmit data to the PLC. • Exceedance of the operator-adjustable alarm setpoint for low pressure/high vacuum (PAL-450) while one or both blowers (B-500 and/or B-600) are on shall cause the PLC to: 1. Shut down the blowers (B-500 and B-600) and the total hydrocarbon analyzer (THA-700) via the shutdown interlock (I-550); 2. Illuminate an alarm light (PAL-450) on the Control Panel, which shall remain illuminated after the blowers have been shut down until reset by the operator; and 3. Initiate an alarm call on the Autodialer. • Exceedance of the operator-adjustable alarm setpoint for high pressure/low vacuum (PAH-450) while one or both blowers (B-500 and/or B-600) are on shall cause the PLC to: 1. Shut down the blowers (B-500 and B-600) and the total hydrocarbon analyzer (THA-700) via the shutdown interlock (I-550); 2. Illuminate an alarm light (PAH-450) on the Control Panel, which shall remain illuminated after the blowers have been shut down until reset by the operator; and 3. Initiate an alarm call on the Autodialer. • PAH-450 and PAL-450 shall have an adjustable timer delays to prevent nuisance shutdown events. • PLC shall transmit suction side pressure data to datalogger.
HOA-500, HOA-600	Switches for manually or automatically starting and stopping of Blowers 500 and 600 (B-500, B-600).	• Separate sets of push buttons to manually start and stop B-500 and B-600. • Blower status shall be indicated by lights on Control Panel: Green for blower "on" (YIG-500 or YIG-600), Red for blower "fault" (i.e. thermal overload, trip) (YIR-500 or YIR-600). • Blowers shall be not be allowed to start or shall shut down when operating if any of the following alarm conditions exist or occur: 1. High-high level in the air/water separator (LAHH-300); 2. Low pressure (high vacuum) on the blower suction piping (PAL-450); 3. High pressure (low vacuum) on the blower suction piping (PAH-450); 4. High temperature on the heat exchanger discharge piping (TAH-630); 5. High pressure on the blower discharge piping (PAH-650); 6. High VOC concentration after the two primary carbon units (HAH-900); 7. Low discharge flow (FAL-900); 8. Fault or Not Ready status in the total hydrocarbon analyzer (THA-700); and 9. Fault in B-500 or B-600. • Blowers shall be shut down via the shut down interlock (I-550) for the following alarms: LAHH- 300, PAL-450, PAH-450, TAH- 630, PAH-650, HAH-900, and FAL-900. • B-600 shall have a variable frequency drive (VFD-600) which is manually adjustable at the control panel.

TABLE 16930-1
PROCESS CONTROL LOOP SUMMARY

PID Tag Number	Control Description	Control Function
VFD-630	Variable frequency drive for automatically controlling fan speed on the Heat Exchanger (HE-630).	• Heat exchanger operates automatically based on input from temperature transmitter TT-630, located downstream of HE-630 through the PLC. • Heat exchanger setpoints shall be adjustable. • Fan speed on HE-630 shall be controlled using a variable speed drive based on temperature indicating controller TIC-630.
TT-630	Temperature transducer for the monitoring of the temperature on the discharge side of the blowers and controlling the fan on the Heat Exchanger (HE-630), located after HE-630.	• The output of TT-630 shall be wired to a temperature indicating transmitter (TIT-630) in the Control Panel for display of the temperature reading. • TIT-630 shall transmit data to the PLC. • Exceedance of the operator-adjustable alarm setpoint for high temperature (TAH-630) while one or both blowers (B-500 and/or B-600) are on shall cause the PLC to: 1. Shut down the blowers (B-500 and B-600) and the total hydrocarbon analyzer (THA-700) via the shutdown interlock (I-550); 2. Illuminate an alarm light (TAH-630) on the Control Panel, which shall remain illuminated after the blowers have been shut down until reset by the operator; and 3. Initiate an alarm call on the Autodialer. • TAH-630 shall have an adjustable timer delay to prevent nuisance shutdown events. • PLC shall transmit discharge side temperature data to datalogger. • Temperature indicating transmitter (TIT-630) shall control the variable speed drive of HE-630.
PT-650	Pressure transducer for the monitoring of the pressure on the discharge side of the blowers, before the carbon adsorption units.	• The output of PT-650 shall be wired to a pressure indicating transmitter (PIT-650) in the Control Panel for display of the pressure reading. • PIT-650 shall transmit data to the PLC. • Exceedance of the operator-adjustable alarm setpoint for high pressure (PAH-700) while one or both blowers (B-500 and/or B-600) are on shall cause the PLC to: 1. Shut down the blowers (B-500 and B-600) and the total hydrocarbon analyzer (THA-650) via the shutdown interlock (I-550); 2. Illuminate an alarm light (PAH-650) on the Control Panel, which shall remain illuminated after the blowers have been shut down until reset by the operator; and 3. Initiate an alarm call on the Autodialer. • PAH-650 shall have an adjustable timer delay to prevent nuisance shutdown events. • PLC shall transmit discharge side pressure data to datalogger.
HOA-700	Switch for starting and stopping Total Hydrocarbon Analyzer 700 (THA-700).	• Total hydrocarbon analyzer automatically takes vapor samples from before the carbon units (VSP-700), between the two primary carbon units (VSP-800), and after the carbon units prior to discharge to the stack (VSP-900). Sample rate frequency is programmable. • THA-700 must be started and ready for sampling in order for the blowers (B-500 and/or B-600) to be turned on. • Analyzer results from THA-700 for each sampling port shall be transmitted to separate indicating transmitter (HIT-700, HIT-800, and HIT-900) in the Control Panel, as described below.
HIT-700	Hydrocarbon indicating transmitter for the vapor stream prior to the carbon units	• Hydrocarbon indicating transmitter (HIT-700) shall display the most recent result of the hydrocarbon analysis on the Control Panel. • HIT-700 shall transmit data to the PLC. • PLC shall transmit hydrocarbon results data to datalogger.

TABLE 16930-1
PROCESS CONTROL LOOP SUMMARY

PID Tag Number	Control Description	Control Function
HIT-800	Hydrocarbon indicating transmitter for the vapor stream between the two primary carbon units	• Hydrocarbon indicating transmitter (HIT-800) shall display the most recent result of the hydrocarbon analysis on the Control Panel. • HIT-800 shall transmit data to the PLC. • Exceedance of the operator-adjustable alarm setpoint for high hydrocarbon result (HAH-800) while one or both blowers (B-500 and/or B-600) are on shall cause the PLC to: 1. Illuminate an alarm light (HAH-800) on the Control Panel, which shall remain illuminated after the blowers have been shut down until reset by the operator; and 2. Initiate an alarm call on the Autodialer. • HAH-800 shall have an adjustable sampling interval timer. • PLC shall transmit hydrocarbon results data to datalogger.
HIT-900	Hydrocarbon indicating transmitter for the vapor stream after the two primary carbon units and spare carbon unit (if necessary, before discharge to the stack.	• Hydrocarbon indicating transmitter (HIT-900) shall display the most recent result of the hydrocarbon analysis on the Control Panel. • HIT-900 shall transmit data to the PLC. • Exceedance of the operator-adjustable alarm setpoint for high hydrocarbon results for the last two (2) (HAH-900) readings while one or both blowers (B-500 and/or B-600) are on shall cause the PLC to: 1. Shut down the blowers (B-500 and B-600) and the total hydrocarbon analyzer (THA-700) via the shutdown interlock (I-550); 2. Illuminate an alarm light (HAH-900) on the Control Panel, which shall remain illuminated after the blowers have been shut down until reset by the operator; and 3. Initiate an alarm call on the Autodialer. • PLC shall transmit hydrocarbon results data to datalogger.
FT-900	Flow transducer for monitoring flow velocity of the discharge vapor to the stack.	• The output of FT-900 shall be wired to a flow velocity indicating transmitter (FIT-900) in the Control Panel for display of the temperature reading. • FIT-900 shall transmit data to the PLC. • Exceedance of the operator-adjustable alarm setpoint for low flow velocity (FAL-900) while one or both blowers (B-500 and/or B-600) are on shall cause the PLC to: 1. Shut down the blowers (B-500 and B-600) and the total hydrocarbon analyzer (THA-700) via the shutdown interlock (I-550); 2. Illuminate an alarm light (FAL-900) on the Control Panel, which shall remain illuminated after the blowers have been shut down until reset by the operator; and 3. Initiate an alarm call on the Autodialer. • FAL-900 shall have an adjustable timer delay to prevent nuisance shutdown events. • PLC shall transmit flow velocity data to datalogger.