SDMS Document
92098

NEWARK BAY STUDY AREA

ADDITIONAL SITES AND CANDIDATE PRPS FOR THE NEWARK BAY STUDY AREA

EVIDENCE CONCERNING

PSE&G – HUDSON

PREPARED FOR:
TIERRA SOLUTIONS, INC.

SUBMITTED TO:
USEPA REGION II

OCTOBER 6, 2005

920980001

PSE&G Hudson

920980002

920980003

HUDSON
FORM APPROVED
OMB No. 158-R0100

FOR AGENCY USE

NPDES PERMIT RENEWAL APPLICATION

NJ0000647

NATIONAL POLLUTANT DISCHARGE ELIMINATION SYSTEM
APPLICATION FOR PERMIT TO DISCHARGE WASTEWATER

Rec'd. ck. for $650.00 8/15/79

STANDARD FORM C — MANUFACTURING AND COMMERCIAL

SECTION I. APPLICANT AND FACILITY DESCRIPTION

Unless otherwise specified on this form all items are to be completed. If an item is not applicable indicate "NA."

ADDITIONAL INSTRUCTIONS FOR SELECTED ITEMS APPEAR IN SEPARATE INSTRUCTION BOOKLET AS INDICATED. REFER TO BOOKLET BEFORE FILLING OUT THESE ITEMS.

Please Print or Type

1. Legal Name of Applicant (see instructions)	101	Public Service Electric and Gas Company
2. Mailing Address of Applicant (see instructions) Number & Street	102a	80 Park Place
City	102b	Newark
State	102c	New Jersey
Zip Code	102d	07101
3. Applicant's Authorized Agent (see instructions) Name and Title	103a	James A. Shissias General Manager - Environmental Affairs
Number & Street Address	103b	80 Park Place Rm 8317
City	103c	Newark
State	103d	New Jersey
Zip Code	103e	07101
Telephone	103f	201 (Area Code) 430-5858 (Number)
4. Previous Application If a previous application for a National or Federal discharge permit has been made, give the date of application. Use numeric designation for date.	104	75 (YR) 7 (MO) 15 (DAY)

AUG 15 16 57 AM '79
ENVIRONMENTAL PROTECTION AGENCY
NEW YORK, N.Y. 10007

I certify that I am familiar with the information contained in this application and that to the best of my knowledge and belief such information is true, complete, and accurate.

James A. Shissias Printed Name of Person Signing	102e	General Manager-Environmental Affair Title
James A. Shissias Signature of Applicant or Authorized Agent	102f	79 (YR) 7 (MO) 30 (DAY) Date Application Signed

18 U.S.C. Section 1001 provides that:

Whoever, in any matter within the jurisdiction of any department or agency of the United States knowingly and wilfully falsifies, conceals or covers up by any trick, scheme, or device a material fact, or makes any false, fictitious or fraudulent statement or representation, or makes or uses any false writing or document knowing same to contain any false, fictitious or fraudulent statement or entry, shall be fined not more than $10,000 or imprisoned not more than five years, or both.

1.

FOR AGENCY USE

Received ____ YR MO DAY

OFFICE: ____ EPA Region Number

State

EPA Form 7550-23 (7-73)

I-1 BJB000001

This section contains 3 pages.

920980004

HUDSON

FOR AGENCY USE

5. Facility/Activity (see instructions) Give the name, ownership, and physical location of the plant or other operating facility where discharge(s) does or will occur.

Name	105a	Hudson Generating Station
Ownership (Public, Private or Both Public and Private)	105b	☐ PUB ☒ PRV ☐ BPP
Check block if Federal Facility and give GSA Inventory Control Number	105c	☐ FED
	105d	
Location		
Street & Number	105e	Duffield and Van Keuren Aves.
City	105f	Jersey City
County	105g	Hudson
State	105h	New Jersey

6. Nature of Business State the nature of the business conducted at the plant or operating facility.

106a Production of electricity

106b AGENCY USE

7. Facility Intake Water (see instructions) Indicate water intake volume per day by sources. Estimate average volume per day in thousand gallons per day.

Municipal or private water system	107a	370	thousand gallons per day
Surface water	107b	90978	thousand gallons per day
Groundwater	107c	10	thousand gallons per day
Other*	107d	NA	thousand gallons per day
Total Item 7	107e	910160	thousand gallons per day

*If there is intake water from 'other,' specify the source. 107f

8. Facility Water Use Estimate average volume per day in thousand gallons per day for the following types of water usage at the facility. (see instructions)

Noncontact cooling water	108a	903230	thousand gallons per day
Boiler feed water	108b	250	thousand gallons per day
Process water (including contact cooling water)	108c	6500	thousand gallons per day
Sanitary water	108d	60	thousand gallons per day
Other*	108e	120	thousand gallons per day
Total Item 8	108f	910160	thousand gallons per day

*If there are discharges to 'other,' specify. 108g (See item 12)

If there is 'Sanitary' water use, give the number of people served. 108h 225 people served

EPA Form 7550-23 (7-73)

920980005

HUDSON

FORM APPROVED
OMB No. 158-R0100

FOR AGENCY USE

8. All Facility Discharges and other Losses; Number and Discharge (see instructions) Volume Specify the number of discharge points and the volume of water discharged or lost from the facility according to the categories below. Estimate average volume per day in thousand gallons per day.

	Number of Discharge Points	Total Volume Used or Discharged, Thousand Gal/Day
Surface Water	13	910010
Sanitary wastewater transport system	1	60
Storm water transport system	0	0
Combined sanitary and storm water transport system	0	0
Surface impoundment with no effluent	0	0
Underground percolation	0	0
Well injection	0	0
Waste acceptance firm	0	0
Evaporation	-	50
Consumption	0	0
Other*	-	40
Facility discharges and volume Total Item 8.	14	910160

*If there are discharges to "other," specify. (See Item 12)

10. Permits, Licenses and Applications
List all existing, pending or denied permits, licenses and applications related to discharges from this facility (see instructions).

	Issuing Agency (a)	For Agency Use (b)	Type of Permit or License (c)	ID Number (d)	Date Filed YR/MO/DA (e)	Date Issued YR/MO/DA (f)	Date Denied YR/MO/DA (g)	Expiration Date YR/MO/DA (h)
1.	U.S.E.P.A.		N.P.D.E.S.	NJ	74/7/31	75/1/31	NA	80/1/30
			DISCHARGE	0000647				
2.	N.J.D.E.P.		CONSTRUCT.	IND-P-	78/7/10	78/10/13	NA	NA
			& OPERATION	78/8/6				
3.	JERSEY CITY		BLDG. PERM	A58933	78/9/29	79/3/26	NA	NA
	H.M.D.C.		CONST.APPR.	NA	78/9/29	78/12/4	NA	NA

11. Maps and Drawings
Attach all required maps and drawings to the back of this application.(see instructions)

12. Additional Information

Item Number	Information
108q & 109m 1	This includes drinking water, fire protection, miscellaneous equipment cleaning, miscellaneous building and grounds cleaning, city water systems leakage, watering of grounds, etc.

EPA Form 7550-92 (7-79)

920980006

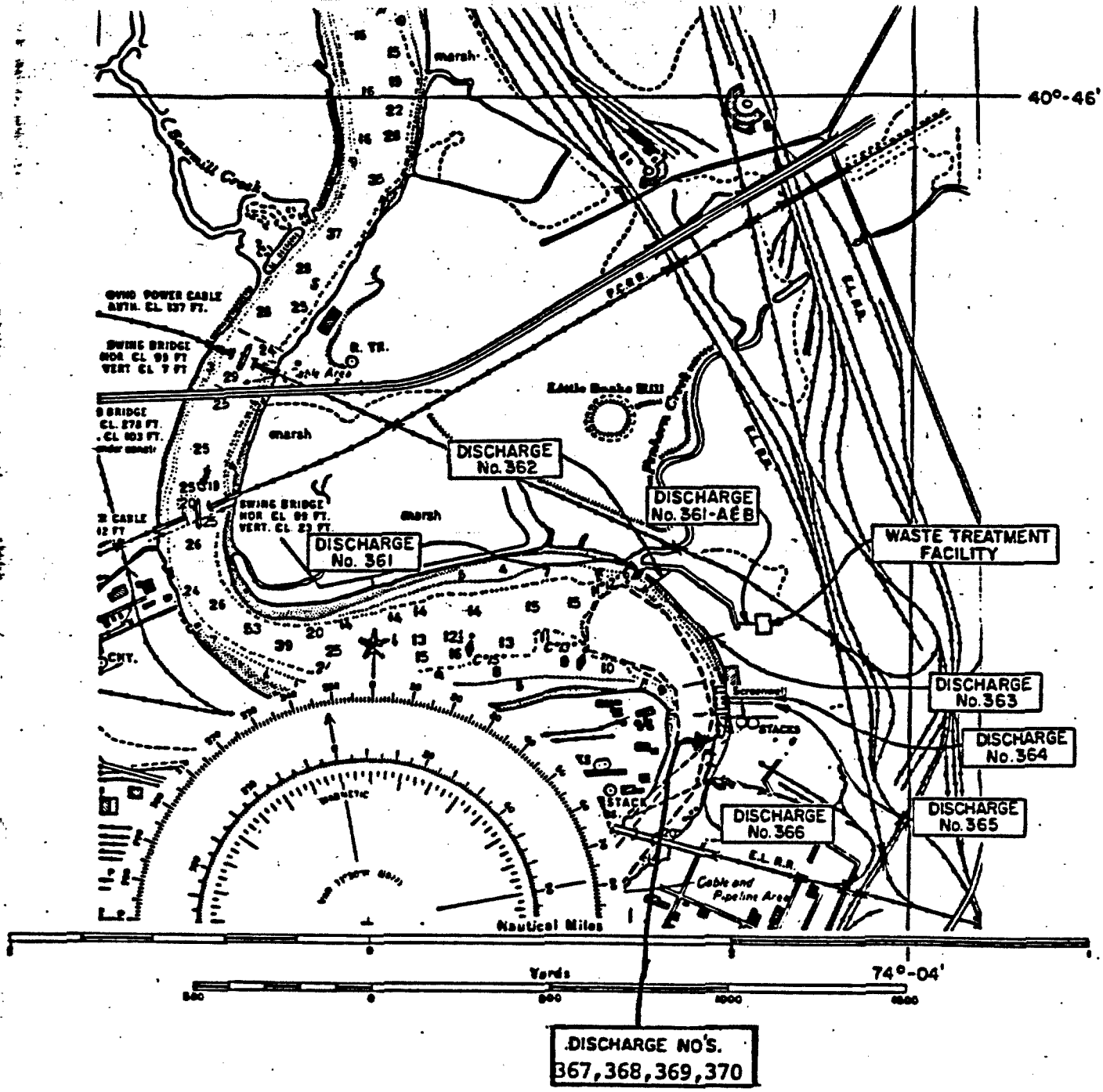

LOCATION MAP
FROM C. & G.S. MAP No. 12337
PUBLIC SERVICE ELECTRIC & GAS CO.
HUDSON GENERATING STATION
CITY OF JERSEY CITY
COUNTY OF HUDSON
STATE OF NEW JERSEY
JUNE 18, 1979 PAGE 1 OF 1

920980007

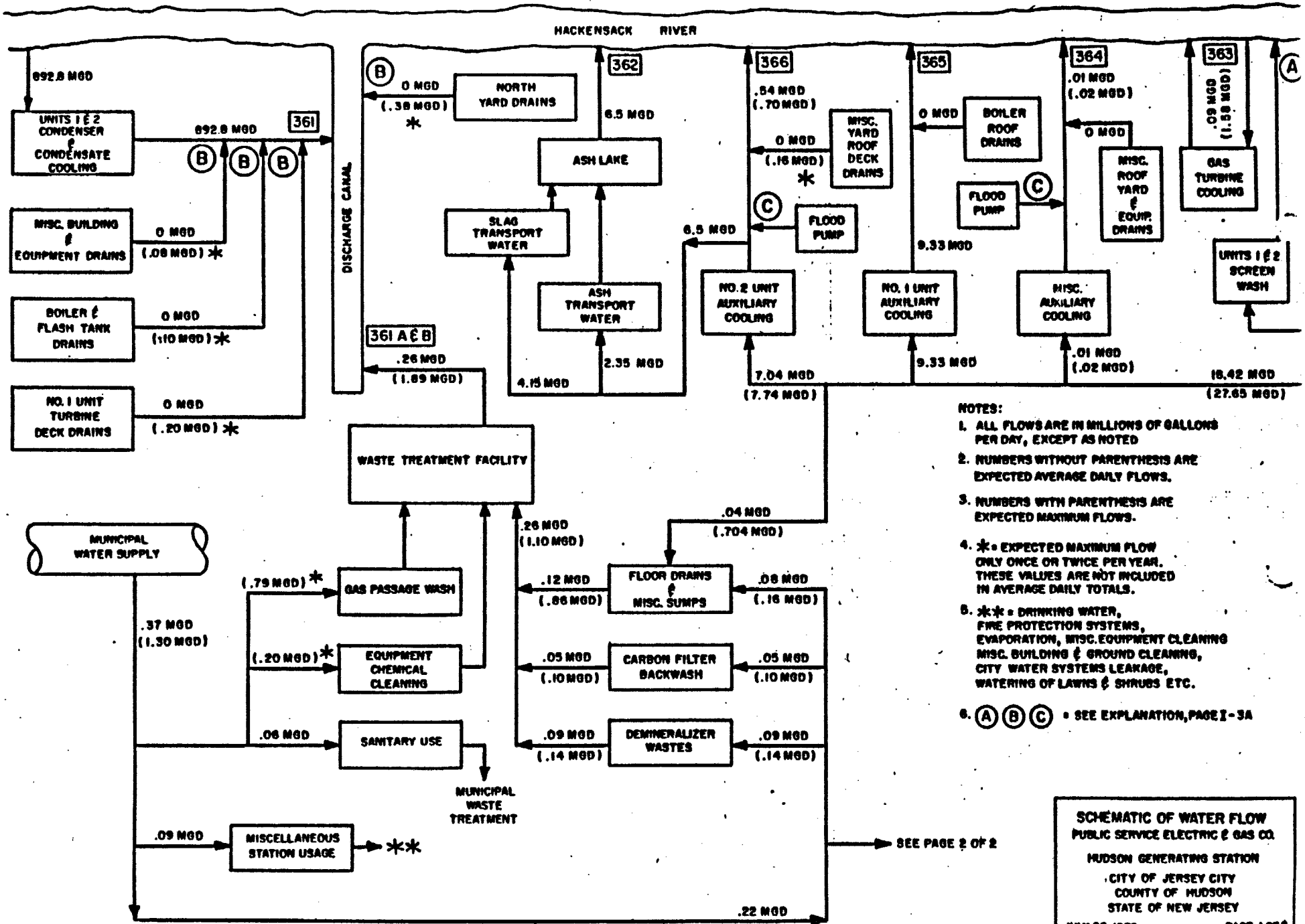
HACKENSACK RIVER
692.8 MGD
UNITS 1 & 2 CONDENSER & CONDENSATE COOLING
692.8 MGD
361
MISC. BUILDING & EQUIPMENT DRAINS
0 MGD (.08 MGD) *
BOILER & FLASH TANK DRAINS
0 MGD (.10 MGD) *
NO. 1 UNIT TURBINE DECK DRAINS
0 MGD (.20 MGD) *
DISCHARGE CANAL
361 A & B
.26 MGD (1.89 MGD)
B
0 MGD (.38 MGD) *
NORTH YARD DRAINS
362
6.5 MGD
ASH LAKE
SLAG TRANSPORT WATER
ASH TRANSPORT WATER
4.15 MGD
2.35 MGD
6.5 MGD
366
.84 MGD (.70 MGD)
0 MGD (.16 MGD) *
MISC. YARD ROOF DECK DRAINS
C
FLOOD PUMP
9.33 MGD
NO. 2 UNIT AUXILIARY COOLING
7.04 MGD (7.74 MGD)
365
0 MGD
BOILER ROOF DRAINS
FLOOD PUMP
C
NO. 1 UNIT AUXILIARY COOLING
9.33 MGD
364
.01 MGD (.02 MGD)
0 MGD
MISC. ROOF YARD & EQUIP. DRAINS
MISC. AUXILIARY COOLING
.01 MGD (.02 MGD)
363
.09 MGD (1.58 MGD)
GAS TURBINE COOLING
UNITS 1 & 2 SCREEN WASH
A
16.42 MGD (27.65 MGD)
WASTE TREATMENT FACILITY
.26 MGD (1.10 MGD)
.04 MGD (.704 MGD)
MUNICIPAL WATER SUPPLY
.37 MGD (1.30 MGD)
(.79 MGD) *
GAS PASSAGE WASH
(.20 MGD) *
EQUIPMENT CHEMICAL CLEANING
.06 MGD
SANITARY USE
MUNICIPAL WASTE TREATMENT
.09 MGD
MISCELLANEOUS STATION USAGE
**
.12 MGD (.86 MGD)
FLOOR DRAINS & MISC. SUMPS
.08 MGD (.16 MGD)
.05 MGD (.10 MGD)
CARBON FILTER BACKWASH
.05 MGD (.10 MGD)
.09 MGD (.14 MGD)
DEMINERALIZER WASTES
.09 MGD (.14 MGD)
.22 MGD
SEE PAGE 2 OF 2
NOTES:
1. ALL FLOWS ARE IN MILLIONS OF GALLONS PER DAY, EXCEPT AS NOTED
2. NUMBERS WITHOUT PARENTHESIS ARE EXPECTED AVERAGE DAILY FLOWS.
3. NUMBERS WITH PARENTHESIS ARE EXPECTED MAXIMUM FLOWS.
4. * = EXPECTED MAXIMUM FLOW ONLY ONCE OR TWICE PER YEAR. THESE VALUES ARE NOT INCLUDED IN AVERAGE DAILY TOTALS.
5. ** = DRINKING WATER, FIRE PROTECTION SYSTEMS, EVAPORATION, MISC. EQUIPMENT CLEANING MISC. BUILDING & GROUND CLEANING, CITY WATER SYSTEMS LEAKAGE, WATERING OF LAWNS & SHRUBS ETC.
6. (A) (B) (C) = SEE EXPLANATION, PAGE I-3A
SCHEMATIC OF WATER FLOW
PUBLIC SERVICE ELECTRIC & GAS CO.
HUDSON GENERATING STATION
CITY OF JERSEY CITY
COUNTY OF HUDSON
STATE OF NEW JERSEY

92098008

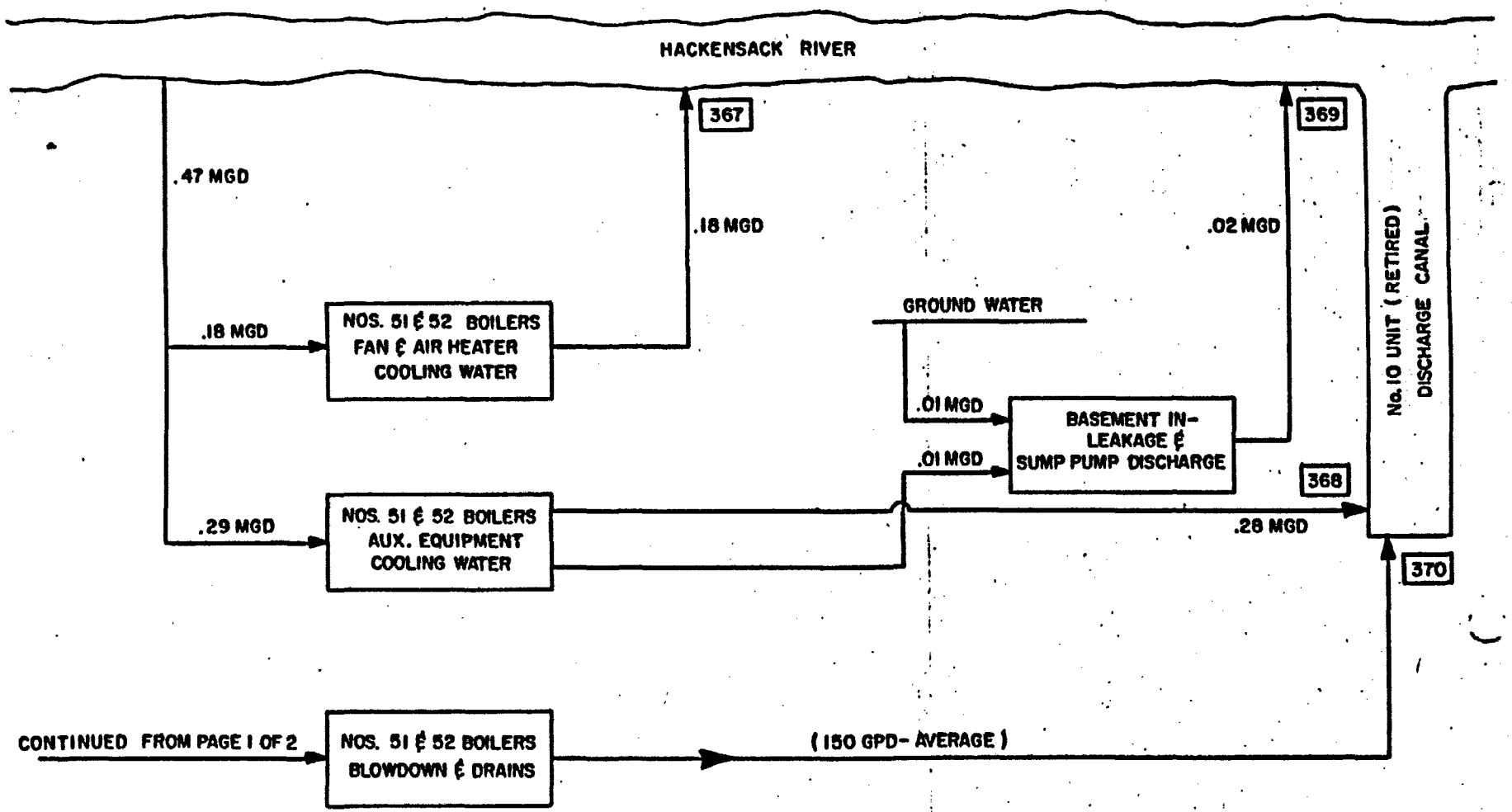

SCHEMATIC OF WATER FLOW
PUBLIC SERVICE ELECTRIC & GAS CO.
HUDSON GENERATING STATION
CITY OF JERSEY CITY
COUNTY OF HUDSON
STATE OF NEW JERSEY

JULY 25, 1979 PAGE 2 OF 2

920980009

FORM APPROVED
OMB No. 158-R0100

FOR AGENCY USE

22. Additional Information

Item Number	Information
109a 1	Applications are attached for 11 of the discharge points indicated in this item. These are 361, 361A & B,362 through 370. The reasons for the absence of applications for the remaining 2 discharge points will be explained.
SCHEMATIC OF WATER FLOW DIAGRAM	
A =	The wash water discharge from the traveling screens is river water used to remove debris collected on the screens. The debris is collected in a basket and the water returned to the river. The basket is emptied periodically into a container for off-site disposal. The screen wash water is controlled automatically by differential pressure across the screens. Therefore the frequency of operation is very erratic, depending upon the condition of the river. Considering the frequency, volume, and nature of these effluents a formal application for discharge has not been made.
B =	There are various effluents which are present only when it rains, or when a small amount of water is drained from pieces of auxiliary equipment. Considering the nature of these waters and the infrequency of the discharge occurrence and the volumes involved, formal applications for such have not been made.
SCHEMATIC OF WATER FLOW DIAGRAM	
C =	The flood pumps are large sump pumps with capacities of 2500 and 3000 gpm. These pumps, one for each unit, would manually be put in service to prevent damage to or destruction of power plant equipment, due to severe flooding. Considering the nature and probability of operation of these discharges, formal applications for discharge have not been made.

920980010

HUDSON
FORM APPROVED
OMB No. 158-R0100

STANDARD FORM C — MANUFACTURING AND COMMERCIAL

FOR AGENCY USE

SECTION II BASIC DISCHARGE DESCRIPTION

Complete this section for each discharge indicated in Section I, item 9, that is to surface waters. This includes discharges to municipal sewerage systems in which the wastewater does not go through a treatment works prior to being discharged to surface waters. Discharges to wells must be described where there are also discharges to surface waters from this facility. SEPARATE DESCRIPTIONS OF EACH DISCHARGE ARE REQUIRED EVEN IF SEVERAL DISCHARGES ORIGINATE IN THE SAME FACILITY. All values for an existing discharge should be representative of the twelve previous months of operation. If this is a proposed discharge, values should reflect best engineering estimates.

ADDITIONAL INSTRUCTIONS FOR SELECTED ITEMS APPEAR IN SEPARATE INSTRUCTION BOOKLET AS INDICATED. REFER TO BOOKLET BEFORE FILLING OUT THESE ITEMS.

1. Discharge Serial No. and Name

   a. Discharge Serial No. (see instructions) — 201a: 361

   b. Discharge Name Give name of discharge, if any. (see instructions) — 201b: Main Circulating Water

   c. Previous Discharge Serial No. If previous permit application was made for this discharge (see item 4, Section I), provide previous discharge serial number. — 201c: 361

2. Discharge Operating Dates

   a. Discharge Began Date If the discharge described below is in operation, give the date (within best estimate) the discharge began. — 202a: 64 12 (YR MO)

   b. Discharge to Begin Date If the discharge has never occurred but is planned for some future date, give the date (within best estimate) the discharge will begin. — 202b: NA (YR MO)

   c. Discharge to End Date If discharge is scheduled to be discontinued within the next 5 years, give the date (within best estimate) the discharge will end. — 202c: NA (YR MO)

3. Engineering Report Available Check if an engineering report is available to reviewing agency upon request. (see instructions) — 203: ☐

4. Discharge Location Name the political boundaries within which the point of discharge is located.

				Agency Use
State	204a	New Jersey	204d	
County	204b	Hudson	204e	
(If applicable) City or Town	204c	Jersey City	204f	

5. Discharge Point Description Discharge is into (check one): (see instructions)

Stream (includes ditches, arroyos, and other intermittent watercourses)	205a	☒ STR
Lake		☐ LKE
Ocean		☐ OCE
Municipal Sanitary Wastewater Transport System		☐ MTS
Municipal Combined Sanitary and Storm Transport System		☐ MCS

EPA Form 7550-23 (7-73)

This section contains 9 pages.

920980011

HUDSON

FOR AGENCY USE

- Municipal Storm Water Transport System — ☐ STS
- Well (injection) — ☐ WEL
- Other — ☐ OTH
- If 'other' is checked, specify

8. Discharge Point — Lat/Long Give the precise location of the point of discharge to the nearest second.
   - Latitude — 40 DEG 45 MIN 07 SEC
   - Longitude — 74 DEG 04 MIN 38 SEC

7. Discharge Receiving Water Name Name the waterway at the point of discharge.(see instructions)

Hackensack River

For Agency Use				For Agency Use
Major	Minor	Sub		303e

If the discharge is through an outfall that extends beyond the shoreline or is below the mean low water line, complete item 8.

8. Offshore Discharge
   - a. Discharge Distance from Shore — NA feet
   - b. Discharge Depth Below Water Surface — NA feet

9. Discharge Type and Occurrence
   - a. Type of Discharge Check whether the discharge is continuous or intermittent. (see instructions)
     - ☒ (con) Continuous
     - ☐ (int) Intermittent
   - b. Discharge Occurrence Days per Week Enter the average number of days per week (during periods of discharge) this discharge occurs. — 7 days per week
   - c. Discharge Occurrence — Months If this discharge normally operates (either intermittently, or continuously) on less than a year-around basis (excluding shutdowns for routine maintenance), check the months during the year when the discharge is operating. (see instructions)
     - ☐ JAN ☐ FEB ☐ MAR ☐ APR
     - ☐ MAY ☐ JUN ☐ JUL ☐ AUG NA
     - ☐ SEP ☐ OCT ☐ NOV ☐ DEC

Complete items 10 and 11 if "intermittent" is checked in item 9.a. Otherwise, proceed to item 12.

10. Intermittent Discharge Quantity State the average volume per discharge occurrence in thousands of gallons. — NA thousand gallons per discharge occurrence.

11. Intermittent Discharge Duration and Frequency
   - a. Intermittent Discharge Duration Per Day State the average number of hours per day the discharge is operating. — NA hours per day
   - b. Intermittent Discharge Frequency State the average number of discharge occurrences per day during days when discharging. — NA discharge occurrences per day

12. Maximum Flow Period Give the time period in which the maximum flow of this discharge occurs. — From 1 (month) to 12 (month)

920980012

DISCHARGE SERIAL NUMBER

361

FORM APPROVED
OMB No. 158-R0100

FOR AGENCY USE

13. **Activity Description** Give a narrative description of activity producing this discharge.(see instructions)

213a Production of electricity using fossil fuel fired boilers producing high pressure steam driving turbine generators.

14. ***Activity Causing Discharge*** For each SIC Code which describes the activity causing this discharge, supply the type and maximum amount of either the raw material consumed (item 14a) or the product produced (item 14b) in the units specified in Table I of the instruction Booklet. For SIC Codes not listed in Table I, use raw material or production units normally used for measuring production.(see instructions)

a. Raw Materials

214a	SIC Code (1)	Name (2)	Maximum Amount/Day (3)	Unit (See Table I) (4)	Shared Discharges (Serial Number) (5)
	NA				

b. Products

214b	SIC Code (1)	Name (2)	Maximum Amount/Day (3)	Unit (See Table I) (4)	Shared Discharges (Serial Number) (5)
	4931	Electricity	25,488	mwhrs	381-A, 381-B.

920980013

DISCHARGE SERIAL NUMBER
361

HUDSON

FOR AGENCY USE

15. Waste Abatement

a. Waste Abatement Practices Describe the waste abatement practices used on this discharge with a brief narrative. (see instructions)

215a Narrative: This discharge is river water used for condenser and equipment cooling using non-contact heat exchangers.

b. Waste Abatement Codes Using the codes listed in Table II of the Instruction Booklet, describe the waste abatement processes for this discharge in the order in which they occur if possible.

215b

(1) ESURFA. (2) _____. (3) _____.
(4) _____. (5) _____. (6) _____.
(7) _____. (8) _____. (9) _____.
(10) _____. (11) _____. (12) _____.
(13) _____. (14) _____. (15) _____.
(16) _____. (17) _____. (18) _____.
(19) _____. (20) _____. (21) _____.
(22) _____. (23) ? . (24) _____.
(25) _____.

920980014

DISCHARGE SERIAL NUMBER

361

FOR AGENCY USE

16. Wastewater Characteristics (See Item 26)

Check the box beside each constituent which is present in the effluent (discharge water). This determination is to be based on actual analysis or best estimate.(See instructions)

Parameter B16	Present	Parameter B16	Present
Color 00080		Copper 01042	
Ammonia 00610		Iron 01045	
Organic nitrogen 00605		Lead 01051	
Nitrate 00620		Magnesium 00927	
Nitrite 00615		Manganese 01055	
Phosphorus 00665		Mercury 71900	
Sulfate 00945		Molybdenum 01062	
Sulfide 00745		Nickel 01067	
Sulfite 00740		Selenium 01147	
Bromide 71870		Silver 01077	
Chloride 00940		Potassium 00937	
Cyanide 00720		Sodium 00929	
Fluoride 00951		Thallium 01059	
Aluminum 01105		Titanium 01152	
Antimony 01097		Tin 01102	
Arsenic 01002		Zinc 01092	
Beryllium 01012		Algicides* 74051	
Barium 01007		Chlorinated organic compounds* 74052	
Boron 01022		Pesticides* 74053	
Cadmium 01027		Oil and grease 00550	
Calcium 00916		Phenols 32730	
Cobalt 01037		Surfactants 38260	
Chromium 01034		Chlorine 50060	X
Fecal coliform bacteria 74055		Radioactivity* 74050	

*Specify substances, compounds and/or elements in Item 26.

Pesticides (insecticides, fungicides, and rodenticides) must be reported in terms of the acceptable common names specified in *Acceptable Common Names and Chemical Names for the Ingredient Statement on Pesticide Labels*, 2nd Edition, Environmental Protection Agency, Washington, D.C. 20250, June 1972, as required by Subsection 162.7(b) of the Regulations for the Enforcement of the Federal Insecticide, Fungicide, and Rodenticide Act.

920980015

DISCHARGE SERIAL NUMBER
361

HUDSON

FOR AGENCY USE

17. Description of Intake and Discharge

For each of the parameters listed below, enter in the appropriate box the value or code letter answer called for.(see instructions)

In addition, enter the parameter name and code and all required values for any of the following parameters if they were checked in item 16: ammonia, cyanide, aluminum, arsenic, beryllium, cadmium, chromium, copper, lead, mercury, nickel, selenium, zinc, phenols, oil and grease, and chlorine (residual).

Parameter and Code		Influent		Effluent					
		Untreated Intake Water (Daily Average) (1)	In-Plant Treated Intake Water (Daily Average) (2)	Daily Average (3)	Minimum Value Observed or Expected During Discharge Activity (4)	Maximum Value Observed or Expected During Discharge Activity (5)	Frequency of Analysis (6)	Number of Analyses (7)	Sample Type (8)
Flow* Gallons per day 00056 50050	A	NA	892.8	892.8	200.0	892.8	calc.	NA	NA
pH Units 00400		NA	6.9	X	6.4	7.9	cont.	NA	NA
Temperature (winter) °F 74028	C	NA	42	55	46	87	cont.	NA	NA
Temperature (summer) °F 74027	C	NA	78	91	87	98	cont.	NA	NA
Biochemical Oxygen Demand (BOD 5-day) mg/l 00310	B	NA	NA	NA	NA	NA	NA	NA	NA
Chemical Oxygen Demand (COD) mg/l 00340	B	NA	NA	NA	NA	NA	NA	NA	NA
Total Suspended (nonfilterable) Solids mg/l 00530	B	NA	NA	NA	NA	NA	NA	NA	NA
Specific Conductance micromhos/cm at 25° C 00095	B	NA	NA	X	NA	NA	NA	NA	NA
Settleable Matter (residue) ml/l 00545	B	NA	NA	NA	NA	NA	NA	NA	NA

*Other discharges sharing intake flow (serial numbers).(see instructions)

(See item 26 for explanations of A, B, C & D)

920980016

HUDSON

FORM APPROVED
OMB No. 158-R0100

DISCHARGE SERIAL NUMBER
361

FOR AGENCY USE

17. (Cont'd.)

Parameter and Code	Influent		Effluent					
	Untreated Intake Water (Daily Average) (1)	In-Plant Treated Intake Water (Daily Average) (2)	Daily Average (3)	Minimum Value Observed or Expected During Discharge Activity (4)	Maximum Value Observed or Expected During Discharge Activity (5)	Frequency of Analysis (6)	Number of Analyses (7)	Sample Type (8)
Chlorine D	NA	5	0.2	0.0	0.4	cont	NA	NA

18. Plant Controls Check if the following plant controls are available for this discharge.

Alternate power source for major pumping facility. 218 ☒ APS

Alarm or emergency procedure for power or equipment failure ☒ ALM

Complete Item 19 if discharge is from cooling and/or steam water generation and water treatment additives are used.

19. *Water Treatment Additives* If the discharge is treated with any conditioner, inhibitor, or algicide, answer the following:

a. Name of Material(s) 219a Chlorine

b. Name and address of manufacturer 219b Linden Chlorine Products
P.O. Box 484
Linden, N.J. 07036

c. Quantity (pounds added per million gallons of water treated). 219c 40

920980017

DISCHARGE SERIAL NUMBER
361

HUDSON
FOR AGENCY USE

d. Chemical composition of these additives (see instructions). 210d

Cl_2

Complete items 20-25 if there is a thermal discharge (e.g., associated with a steam and/or power generation plant, steel mill, petroleum refinery, or any other manufacturing process) and the total discharge flow is 10 million gallons per day or more. (see instructions)

20. Thermal Discharge Source Check the appropriate item(s) indicating the source of the discharge. (see instructions) 220

Boiler Blowdown	☐ BLBD
Boiler Chemical Cleaning	☐ BCCL
Ash Pond Overflow	☐ APOF
Boiler Water Treatment — Evaporator Blowdown	☐ EPBD
Oil or Coal Fired Plants — Effluent from Air Pollution Control Devices	☐ OCFP
Condense Cooling Water	☒ COND
Cooling Tower Blowdown	☐ CTBD
Manufacturing Process	☐ MFPR
Other	☐ OTHR

21. Discharge/Receiving Water Temperature Difference

Give the maximum temperature difference between the discharge and receiving waters for summer and winter operating conditions. (see instructions)

Summer 221a: 28 °F.

Winter 221b: 22 °F.

22. Discharge Temperature, Rate of Change Per Hour 222: NA °F./hour

Give the maximum possible rate of temperature change per hour of discharge under operating conditions. (see instructions)

23. Water Temperature, Percentile Report (Frequency of Occurrence)

In the table below, enter the temperature which is exceeded 10% of the year, 5% of the year, 1% of the year and not at all (maximum yearly temperature). (see instructions)

Frequency of occurrence

	10%	5%	1%	Maximum
a. Intake Water Temperature (Subject to natural changes) 223a	79 °F	80 °F	83 °F	87 °F
b. Discharge Water Temperature 223b	88 °F	90 °F	93 °F	98 °F

24. Water Intake Velocity (see instructions) 224: E feet/sec.

25. Retention Time Give the length of time, in minutes, from start of water temperature rise to discharge of cooling water. (see instructions) 225: F minutes

920980018

HUDSON
FORM APPROVED
OMB No. 158-R0100

DISCHARGE SERIAL NUMBER

361

FOR AGENCY USE

28. Additional Information

Item	Information
201b	Boiler and flash tank drains periodically go to the main discharge canal. These drains may occur 5 to 8 times per year. The volume is between 37,000 and 57,000 gallons per drain. The composition of the drain is demineralized water with the addition of .4mg/l of ammonia. It contains less than 1.0 mg/l copper and iron.
216	This effluent is river water used for once through cooling. therefore any parameters found in the inlet will also be found in the discharge. Except for chlorine, no chemicals are added.
217a	A = Flow data are calculated, based on pump service hours and design flow rate. B = Since these analysis were not required by existing NPDES permit, they were not performed and hence no data are available C = Winter temperatures are based on data from Oct. 1, 1978 thru March 31, 1979. Summer temperatures are based on data from April 1, 1978 through September 30, 1978. D = Data given are for free residual chlorine.
217a & 219b	Each of 4 (four) main circulating water systems is chlorinate for approximately 40 minutes, three times per day.
224	E = No. 1 unit = 1.7 fps. ; No. 2 Unit = 2.14 fps.
225	F = Maximum time = 37.7 minutes. Minimum time = 10.8 minutes.

920980019

FORM APPROVED
OMB No. 158-R0100

STANDARD FORM C – MANUFACTURING AND COMMERCIAL

FOR AGENCY USE

SECTION II. BASIC DISCHARGE DESCRIPTION

Complete this section for each discharge indicated in Section I, Item 9, that is to surface waters. This includes discharges to municipal sewerage systems in which the wastewater does not go through a treatment works prior to being discharged to surface waters. Discharges to wells must be described where there are also discharges to surface waters from this facility. SEPARATE DESCRIPTIONS OF EACH DISCHARGE ARE REQUIRED EVEN IF SEVERAL DISCHARGES ORIGINATE IN THE SAME FACILITY. All values for an existing discharge should be representative of the twelve previous months of operation. If this is a proposed discharge, values should reflect best engineering estimates.

ADDITIONAL INSTRUCTIONS FOR SELECTED ITEMS APPEAR IN SEPARATE INSTRUCTION BOOKLET AS INDICATED. REFER TO BOOKLET BEFORE FILLING OUT THESE ITEMS.

1. Discharge Serial No. and Name

   a. Discharge Serial No. (see instructions) — 201a: 361-A

   b. Discharge Name. Give name of discharge, if any. (see instructions) — 201b: Waste Treatment - Low Volume Wastes

   c. Previous Discharge Serial No. If previous permit application was made for this discharge (see item 4, Section I), provide previous discharge serial number. — 201c: NA

2. Discharge Operating Dates

   a. Discharge Began Date. If the discharge described below is in operation, give the date (within best estimate) the discharge began. — 202a: NA (YR MO)

   b. Discharge to Begin Date. If the discharge has never occurred but is planned for some future date, give the date (within best estimate) the discharge will begin. — 202b: 79 9 (YR MO)

   c. Discharge to End Date. If discharge is scheduled to be discontinued within the next 5 years, give the date (within best estimate) the discharge will end. — 202c: NA (YR MO)

3. Engineering Report Available. Check if an engineering report is available to reviewing agency upon request. (see instructions) — 203: ☒

4. Discharge Location. Name the political boundaries within which the point of discharge is located.

			Agency Use
State	204d	New Jersey	204d
County	204e	Hudson	204e
(If applicable) City or Town	204f	Jersey City	204f

5. Discharge Point Description. Discharge is into (check one): (see instructions)

	205a
Stream (includes ditches, arroyos, and other intermittent watercourses)	☐ STR
Lake	☐ LKE
Ocean	☐ OCE
Municipal Sanitary Wastewater Transport System	☐ MTS
Municipal Combined Sanitary and Storm Transport System	☐ MCS

EPA Form 7550-23 (7-73)

This section contains 9 pages.

920980020

DISCHARGE SERIAL NUMBER

361-A

HUDSON

FOR AGENCY USE

Municipal Storm Water Transport System — ☐ STS

Well (injection) — ☐ WEL

Other — ☒ OTH

If "other" is checked, specify — Main Circulating Water Discharge Canal

6. Discharge Point — Lat/Long Give the precise location of the point of discharge to the nearest second.

Latitude — 40 DEG 45 MIN 00 SEC

Longitude — 74 DEG 04 MIN 25 SEC

7. Discharge Receiving Water Name Name the waterway at the point of discharge. (see instructions) — Hackensack River

If the discharge is through an outfall that extends beyond the shoreline or is below the mean low water line, complete item 8.

For Agency Use				For Agency Use
Major	Minor	Sub		303e

8. Offshore Discharge

a. Discharge Distance from Shore — NA feet

b. Discharge Depth Below Water Surface — NA feet

9. Discharge Type and Occurrence

a. Type of Discharge Check whether the discharge is continuous or intermittent. (see instructions)

☐ (con) Continuous

☒ (int) Intermittent

b. Discharge Occurrence Days per Week Enter the average number of days per week (during periods of discharge) this discharge occurs.

7 days per week

c. Discharge Occurrence — Months If this discharge normally operates (either intermittently, or continuously) on less than a year-around basis (excluding shutdowns for routine maintenance), check the months during the year when the discharge is operating. (see instructions)

☐ JAN ☐ FEB ☐ MAR ☐ APR
☐ MAY ☐ JUN ☐ JUL ☐ AUG NA
☐ SEP ☐ OCT ☐ NOV ☐ DEC

Complete items 10 and 11 if "intermittent" is checked in item 9.a. Otherwise, proceed to item 12.

10. Intermittent Discharge Quantity State the average volume per discharge occurrence in thousands of gallons.

3.60 thousand gallons per discharge occurrence.

11. Intermittent Discharge Duration and Frequency

a. Intermittent Discharge Duration Per Day State the average number of hours per day the discharge is operating.

6 hours per day

b. Intermittent Discharge Frequency State the average number of discharge occurrences per day during days when discharging.

72 discharge occurrences per day

12. Maximum Flow Period Give the time period in which the maximum flow of this discharge occurs.

From 1 (month) to 12 (month)

EPA Form 7550-22 (7-73)

920980021

DISCHARGE SERIAL NUMBER

361-A

HUDSON

FORM APPROVED
OMB No. 158-R0100

FOR AGENCY USE

13. Activity Description Give a narrative description of activity producing this discharge.(see instructions)

813a Waste water from floor drains, boiler drains demineralizer regenerations and miscellaneous sumps is piped to the treatment facility for the necessary treatment, prior to discharge to the main circulating water canal.

14. Activity Causing Discharge For each SIC Code which describes the activity causing this discharge, supply the type and maximum amount of either the raw material consumed (item 14a) or the product produced (item 14b) in the units specified in Table I of the instruction Booklet. For SIC Codes not listed in Table I, use raw material or production units normally used for measuring production.(see instructions)

a. Raw Materials

814a	SIC Code (1)	Name (2)	Maximum Amount/Day (3)	Unit (See Table I) (4)	Shared Discharges (Serial Number) (5)
	NA				

b. Products

814b	SIC Code (1)	Name (2)	Maximum Amount/Day (3)	Unit (See Table I) (4)	Shared Discharges (Serial Number) (5)
	4931	Electricity	25,488	mwhrs	361; 361-B

EPA Form 7550-22 (7-73)

II-3

920980022

DISCHARGE SERIAL NUMBER

361-A

HUDSON

FOR AGENCY USE

15. Waste Abatement

a. Waste Abatement Practices Describe the waste abatement practices used on this discharge with a brief narrative. (see instructions)

215a

Narrative: Low Volume wastes enter the treatment facility for settling. Some have passed through an oil separator prior to entry. After a period of settling, the water is discharged.

b. Waste Abatement Codes Using the codes listed in Table II of the instruction Booklet, describe the waste abatement processes for this discharge in the order in which they occur if possible.

215b

(1) ESEGRE.	(2) PSEPAR.	(3) PSEDIM.
(4) ____.	(5) ____.	(6) ____.
(7) ____.	(8) ____.	(9) ____.
(10) ____.	(11) ____.	(12) ____.
(13) ____.	(14) ____.	(15) ____.
(16) ____.	(17) ____.	(18) ____.
(19) ____.	(20) ____.	(21) ____.
(22) ____.	(23) ____.	(24) ____.
(25) ____.		

920980023

DISCHARGE SERIAL NUMBER

361-A

FORM APPROVED
OMB No. 158-R0100.

FOR AGENCY USE

16. Wastewater Characteristics (See Item 26)

Check the box beside each constituent which is present in the effluent (discharge water). This determination is to be based on actual analysis or best estimate.(see instructions)

Parameter B16	Present	Parameter B16	Present
Color 00080		Copper 01042	X
Ammonia 00610	X	Iron 01045	X
Organic nitrogen 00605		Lead 01051	
Nitrate 00620	X	Magnesium 00927	X
Nitrite 00615		Manganese 01055	X
Phosphorus 00665	X	Mercury 71900	
Sulfate 00945	X	Molybdenum 01062	
Sulfide 00745		Nickel 01067	X
Sulfite 00740		Selenium 01147	
Bromide 71870		Silver 01077	
Chloride 00940	X	Potassium 00937	X
Cyanide 00720		Sodium 00929	X
Fluoride 00951		Thallium 01059	
Aluminum 01105		Titanium 01152	
Antimony 01097		Tin 01102	
Arsenic 01002		Zinc 01092	X
Beryllium 01012		Algicides* 74051	
Barium 01007		Chlorinated organic compounds* 74052	
Boron 01022		Pesticides* 74053	
Cadmium 01027		Oil and grease 00550	X
Calcium 00916	X	Phenols 32730	
Cobalt 01037		Surfactants 38260	
Chromium 01034	X	Chlorine 50060	
Fecal coliform bacteria 74055		Radioactivity* 74050	

*Specify substances, compounds and/or elements in Item 26.

Pesticides (insecticides, fungicides, and rodenticides) must be reported in terms of the acceptable common names specified in *Acceptable Common Names and Chemical Names for the Ingredient Statement on Pesticide Labels*, 2nd Edition, Environmental Protection Agency, Washington, D.C. 20250, June 1972, as required by Subsection 162.7(b) of the Regulations for the Enforcement of the Federal Insecticide, Fungicide, and Rodenticide Act.

920980024

DISCHARGE SERIAL NUMBER

361 - A

HUDSON

FOR AGENCY USE

17. Description of Intake and Discharge

For each of the parameters listed below, enter in the appropriate box the value or code letter answer called for. (see instructions)

In addition, enter the parameter name and code and all required values for any of the following parameters if they were checked in Item 16; ammonia, cyanide, aluminum, arsenic, beryllium, cadmium, chromium, copper, lead, mercury, nickel, selenium, zinc, phenols, oil and grease, and chlorine (residual).

Parameter and Code (217a)		Influent		Effluent					
		Untreated Intake Water (Daily Average) (1)	In-Plant Treated Intake Water (Daily Average) (2)	Daily Average (3)	Minimum Value Observed or Expected During Discharge Activity (4)	Maximum Value Observed or Expected During Discharge Activity (5)	Frequency of Analysis (6)	Number of Analyses (7)	Sample Type (8)
Flow* Gallons per day 00056 50050	A	.26	NA	.26	.13	1.89	cont	NA	NA
pH Units 00400	B	6.9	NA	X	6.0	9.0	cont	NA	NA
Temperature (winter) °F 74028	C	45	NA	50	40	65	NA	NA	NA
Temperature (summer) °F 74027	C	65	NA	70	60	90	NA	NA	NA
Biochemical Oxygen Demand (BOD 5-day) mg/l 00310	D	NA	NA	NA	NA	NA	NA	NA	NA
Chemical Oxygen Demand (COD) mg/l 00340	D	NA	NA	NA	NA	NA	NA	NA	NA
Total Suspended (nonfilterable) Solids mg/l 00530	E	50	NA	20	10	100	NA	NA	NA
Specific Conductance micromhos/cm at 25° C 00095	D	NA	NA	X	NA	NA	NA	NA	NA
Settleable Matter (residue) ml/l 00545	D	NA	NA	NA	NA	NA	NA	NA	NA

*Other discharges sharing intake flow (serial numbers) (see instructions)

(See item 26 for explanations of A, B, C, D & E)

920980025

DISCHARGE SERIAL NUMBER
361-A

FOR AGENCY USE

17. (Cont'd.)

Parameter and Code			Influent: Untreated Intake Water (Daily Average) (1)	Influent: In-Plant Treated Intake Water (Daily Average) (2)	Effluent: Daily Average (3)	Effluent: Minimum Value Observed or Expected During Discharge Activity (4)	Effluent: Maximum Value Observed or Expected During Discharge Activity (5)	Frequency of Analysis (6)	Number of Analyses (7)	Sample Type (8)
Oil & Grease	00550	E	20	NA	8	5	20	NA	NA	NA
Chromium	01034	E	.10	NA	.10	.01	.20	NA	NA	NA
Copper	01042	E	.10	NA	.10	.05	1.0	NA	NA	NA
Iron	01045	E	.60	NA	.60	.30	1.0	NA	NA	NA
Nickel	01067	E	1.00	NA	1.00	.50	4.0	NA	NA	NA
Zinc	01092	E	2.00	NA	2.00	1.50	3.0	NA	NA	NA
Ammonia	00610	E	.20	NA	.05	0.0	.2	NA	NA	NA

18. Plant Controls Check if the following plant controls are available for this discharge.

Alternate power source for major pumping facility. 218 ☒ APS

Alarm or emergency procedure for power or equipment failure ☒ ALM

Complete Item 19 if discharge is from cooling and/or steam water generation and water treatment additives are used.

19. Water Treatment Additives If the discharge is treated with any conditioner, inhibitor, or algicide, answer the following:

a. Name of Material(s) 219a 1) Percol 726 - Polymer
2) Caustic Soda

b. Name and address of manufacturer 219b 1) Allied Colloids Inc.
1 Robinson Lane, Ridgewood, N.J. 07450
2) Kramer Chemical Inc.
935 Allwood Rd., Clifton, N.J. 07012

c. Quantity (pounds added per million gallons of water treated). 219c F

920980026

DISCHARGE SERIAL NUMBER
361-A

FOR AGENCY USE

d. Chemical composition of these additives (see instructions). 219d NA

Complete items 20-25 if there is a thermal discharge (e.g., associated with a steam and/or power generation plant, steel mill, petroleum refinery, or any other manufacturing process) and the total discharge flow is 10 million gallons per day or more. (see instructions)

20. Thermal Discharge Source Check the appropriate item(s) indicating the source of the discharge. (see instructions) 220

NA

- ☐ Boiler Blowdown — ☐ BLBD
- ☐ Boiler Chemical Cleaning — ☐ BCCL
- ☐ Ash Pond Overflow — ☐ APOF
- ☐ Boiler Water Treatment — Evaporator Blowdown — ☐ EPBD
- ☐ Oil or Coal Fired Plants — Effluent from Air Pollution Control Devices — ☐ OCFP
- ☐ Condense Cooling Water — ☐ COND
- ☐ Cooling Tower Blowdown — ☐ CTBD
- ☐ Manufacturing Process — ☐ MFPR
- ☐ Other — ☐ OTHR

21. Discharge/Receiving Water Temperature Difference

Give the maximum temperature difference between the discharge and receiving waters for summer and winter operating conditions. (see instructions)

- Summer 221a: NA °F,
- Winter 221b: NA °F.

22. Discharge Temperature, Rate of Change Per Hour 222: NA °F./hour

Give the maximum possible rate of temperature change per hour of discharge under operating conditions. (see instructions)

23. Water Temperature, Percentile Report (Frequency of Occurrence)

In the table below, enter the temperature which is exceeded 10% of the year, 5% of the year, 1% of the year and not at all (maximum yearly temperature). (see instructions)

Frequency of occurrence	10%	5%	1%	Maximum
a. Intake Water Temperature (Subject to natural changes) 223a	NA °F	°F	°F	°F
b. Discharge Water Temperature 223b	NA °F	°F	°F	°F

24. Water Intake Velocity (see instructions) 224: NA feet/sec.

25. Retention Time Give the length of time, in minutes, from start of water temperature rise to discharge of cooling water. (see instructions) 225: NA minutes

920980027

HUDSON

FORM APPROVED
OMB No. 158-R0100

DISCHARGE SERIAL NUMBER

361-A

FOR AGENCY USE

28. Additional Information

Item	Information
203	Engineering reports were submitted to USEPA and NJDEP on September 3, 1976.
216	This discharge is primarily demineralizer regenerant waste, floor drains and carbon filter backwash. Therefore the parameters to be found will be those prevalent in city water and river water.
217a	A = Flow figures are estimated. Discharge flow will be continuously monitored when treatment facility is in operation. B = pH of the treatment facility effluent is not monitored. The pH is continuously monitored in the main circulating water canal just prior to the outfall. This is downstream from the point where the facility discharge enters the canal. It is expected to very from 6.0 to 9.0 C = Temperature data is estimated. All discharges from the facility will be a combination of the river water city water and ambient air temperature. D = Since this is a new facility, expected to go into operation on or about December 1, 1979 no data are available. E = These data are estimates. No previous data are available since this is a new facility.
219a	Present Polymer being considered. However others may be used in the future.
219c	F = Chemical treatment is not normally required. However, if needed, caustic soda is added to raise the pH to approximately 9.6 and polymer is added to give a concentration of 3-5 mg/l.

920980028

HUDSON
FORM APPROVED
OMB No. 158-R0100

STANDARD FORM C – MANUFACTURING AND COMMERCIAL

FOR AGENCY USE

SECTION II. BASIC DISCHARGE DESCRIPTION

Complete this section for each discharge indicated in Section I, Item 9, that is to surface waters. This includes discharges to municipal sewerage systems in which the wastewater does not go through a treatment works prior to being discharged to surface waters. Discharges to wells must be described where there are also discharges to surface waters from this facility. SEPARATE DESCRIPTIONS OF EACH DISCHARGE ARE REQUIRED EVEN IF SEVERAL DISCHARGES ORIGINATE IN THE SAME FACILITY. All values for an existing discharge should be representative of the twelve previous months of operation. If this is a proposed discharge, values should reflect best engineering estimates.

ADDITIONAL INSTRUCTIONS FOR SELECTED ITEMS APPEAR IN SEPARATE INSTRUCTION BOOKLET AS INDICATED. REFER TO BOOKLET BEFORE FILLING OUT THESE ITEMS.

1. Discharge Serial No. and Name

a. Discharge Serial No. (see instructions)	201a	361-B
b. Discharge Name Give name of discharge, if any. (see instructions)	201b	Waste Treatment Facility - Metal Cleaning Waste
c. Previous Discharge Serial No. If previous permit application was made for this discharge (see Item 4, Section I), provide previous discharge serial number.	201c	NA

2. Discharge Operating Dates

a. Discharge Began Date If the discharge described below is in operation, give the date (within best estimate) the discharge began.	202a	NA (YR MO)
b. Discharge to Begin Date If the discharge has never occurred but is planned for some future date, give the date (within best estimate) the discharge will begin.	202b	79 9 (YR MO)
c. Discharge to End Date If discharge is scheduled to be discontinued within the next 5 years, give the date (within best estimate) the discharge will end.	202c	NA (YR MO)

3. Engineering Report Available
Check if an engineering report is available to reviewing agency upon request. (see instructions) 203 ☒

4. Discharge Location Name the political boundaries within which the point of discharge is located.

			Agency Use
State	204a	New Jersey	204d
County	204b	Hudson	204e
(If applicable) City or Town	204c	Jersey City	204f

5. Discharge Point Description
Discharge is into (check one); (see instructions)

Stream (includes ditches, arroyos, and other intermittent watercourses)	205a	☐ STR
Lake		☐ LKE
Ocean		☐ OCE
Municipal Sanitary Wastewater Transport System		☐ MTS
Municipal Combined Sanitary and Storm Transport System		☐ MCS

920980029

DISCHARGE SERIAL NUMBER

361-B

HUDSON

FOR AGENCY USE

Municipal Storm Water Transport System

Well (injection)

Other

If 'other' is checked, specify

☐ STS

☐ WEL

☒ OTH

Main Circulating Water Discharge Canal

6. Discharge Point — Lat/Long Give the precise location of the point of discharge to the nearest second.

Latitude 40 DEG 45 MIN 00 SEC

Longitude 74 DEG 04 MIN 25 SEC

7. Discharge Receiving Water Name Name the waterway at the point of discharge.(see instructions)

Hackensack River

If the discharge is through an outfall that extends beyond the shoreline or is below the mean low water line, complete item 8.

For Agency Use				For Agency Use
Major	Minor	Sub		303e

8. Offshore Discharge

a. Discharge Distance from Shore — NA feet

b. Discharge Depth Below Water Surface — NA feet

9. Discharge Type and Occurrence

a. Type of Discharge Check whether the discharge is continuous or intermittent. (see instructions)

☐ (con) Continuous

☒ (int) Intermittent

b. Discharge Occurrence Days per Week Enter the average number of days per week (during periods of discharge) this discharge occurs.

0 days per week

c. Discharge Occurrence —Months If this discharge normally operates (either intermittently, or continuously) on less than a year-around basis (excluding shutdowns for routine maintenance), check the months during the year when the discharge is operating. (see instructions)

☐ JAN ☐ FEB ☐ MAR ☐ APR
☐ MAY ☐ JUN ☐ JUL ☐ AUG NA
☐ SEP ☐ OCT ☐ NOV ☐ DEC

Complete items 10 and 11 if "intermittent" is checked in item 9.a. Otherwise, proceed to item 12.

10. Intermittent Discharge Quantity State the average volume per discharge occurrence in thousands of gallons.

500 thousand gallons per discharge occurrence.

11. Intermittent Discharge Duration and Frequency

a. Intermittent Discharge Duration Per Day State the average number of hours per day the discharge is operating.

18 hours per day

b. Intermittent Discharge Frequency State the average number of discharge occurrences per day during days when discharging.

2 discharge occurrences per day

12. Maximum Flow Period Give the time period in which the maximum flow of this discharge occurs.

From 1 month to 12 month

EPA Form 7550-23 (7-73)

920980030

HUDSON

DISCHARGE SERIAL NUMBER

361-B

FORM APPROVED
OMB No. 158-R0100

FOR AGENCY USE

13. Activity Description Give a narrative description of activity producing this discharge.(see instructions)

213a Waste water from equipment chemical cleaning, air heater, furnace and precipitator washes is piped to the facility. Caustic soda and polymer are then added so that the various parameters listed in the permit, will meet the N.P.D.E.S. limitations. Discharge is made to the main circulating water canal.

14. Activity Causing Discharge For each SIC Code which describes the activity causing this discharge, supply the type and maximum amount of either the raw material consumed (item 14a) or the product produced (item 14b) in the units specified in Table I of the instruction Booklet. For SIC Codes not listed in Table I, use raw material or production units normally used for measuring production.(see instructions)

a. Raw Materials

	SIC Code (1)	Name (2)	Maximum Amount/Day (3)	Unit (See Table II) (4)	Shared Discharges (Serial Number) (5)
214a	NA				

b. Products

	SIC Code (1)	Name (2)	Maximum Amount/Day (3)	Unit (See Table II) (4)	Shared Discharges (Serial Number) (5)
214b	4931	Electricity	25,488	mwhrs.	361; 361-A

920980031

DISCHARGE SERIAL NUMBER
361-B

HUDSON

FOR AGENCY USE

15. Waste Abatement

a. Waste Abatement Practices Describe the waste abatement practices used on this discharge with a brief narrative. (see instructions)

215a

Narrative: Waste water from equipment chemical cleaning, air heater, furnace & precipitator washes is piped to the treatment facility. There it is treated with caustic and polymer, followed by settling. The water is then discharged to the main circulating water canal.

b. Waste Abatement Codes Using the codes listed in Table II of the instruction Booklet, describe the waste abatement processes for this discharge in the order in which they occur if possible.

215b

(1) ESEGRE	(2) PSEDIM	(3) CCOAGU
(4) PSEDIM	(5)	(6)
(7)	(8)	(9)
(10)	(11)	(12)
(13)	(14)	(15)
(16)	(17)	(18)
(19)	(20)	(21)
(22)	(23) ?	(24)
(25)		

920980032

DISCHARGE SERIAL NUMBER

361-B

FORM APPROVED
OMB No. 158-R0100

FOR AGENCY USE

16. Wastewater Characteristics (See Item 26)

Check the box beside each constituent which is present in the effluent (discharge water). This determination is to be based on actual analysis or best estimate (see instructions)

Parameter B16	Present	Parameter B16	Present
Color 00080		Copper 01042	X
Ammonia 00610		Iron 01045	X
Organic nitrogen 00605		Lead 01051	X
Nitrate 00620	X	Magnesium 00927	X
Nitrite 00615		Manganese 01055	X
Phosphorus 00665	X	Mercury 71900	X
Sulfate 00945	X	Molybdenum 01062	X
Sulfide 00745		Nickel 01067	X
Sulfite 00740		Selenium 01147	
Bromide 71870		Silver 01077	
Chloride 00940	X	Potassium 00937	X
Cyanide 00720		Sodium 00929	X
Fluoride 00951		Thallium 01059	
Aluminum 01105	X	Titanium 01152	X
Antimony 01097		Tin 01102	
Arsenic 01002	X	Zinc 01092	X
Beryllium 01012	X	Algicides* 74051	
Barium 01007	X	Chlorinated organic compounds* 74052	
Boron 01022		Pesticides* 74053	
Cadmium 01027	X	Oil and grease 00550	X
Calcium 00916	X	Phenols 32730	
Cobalt 01037		Surfactants 38260	
Chromium 01034	X	Chlorine 50060	
Fecal coliform bacteria 74055		Radioactivity* 74050	

*Specify substances, compounds and/or elements in Item 26.

Pesticides (insecticides, fungicides, and rodenticides) must be reported in terms of the acceptable common names specified in *Acceptable Common Names and Chemical Names for the Ingredient Statement on Pesticide Labels*, 2nd Edition, Environmental Protection Agency, Washington, D.C. 20250, June 1972, as required by Subsection 162.7(b) of the Regulations for the Enforcement of the Federal Insecticide, Fungicide, and Rodenticide Act.

920980033

DISCHARGE SERIAL NUMBER

361-B

FOR AGENCY USE

17. Description of Intake and Discharge

For each of the parameters listed below, enter in the appropriate box the value or code letter answer called for. (see instructions)

In addition, enter the parameter name and code and all required values for any of the following parameters if they were checked in Item 16; ammonia, cyanide, aluminum, arsenic, beryllium, cadmium, chromium, copper, lead, mercury, nickel, selenium, zinc, phenols, oil and grease, and chlorine (residual).

Parameter and Code		Influent		Effluent					
		Untreated Intake Water (Daily Average) (1)	In-Plant Treated Intake Water (Daily Average) (2)	Daily Average (3)	Minimum Value Observed or Expected During Discharge Activity (4)	Maximum Value Observed or Expected During Discharge Activity (5)	Frequency of Analysis (6)	Number of Analyses (7)	Sample Type (8)
Flow* ~~Gallons per day~~ MGD 50050	A	.80	NA	.80	.20	1.0	cont	NA	NA
pH Units 00400	B	1.0/ 12.0	NA	X	6.0	9.0	cont	NA	NA
Temperature (winter) °F 74028	C	45	NA	50	40	65	NA	NA	NA
Temperature (summer) °F 74027	C	65	NA	70	60	90	NA	NA	NA
Biochemical Oxygen Demand (BOD 5-day) mg/l 00310	D	NA	NA	NA	NA	NA	NA	NA	NA
Chemical Oxygen Demand (COD) mg/l 00340	D	NA	NA	NA	NA	NA	NA	NA	NA
Total Suspended (nonfilterable) Solids mg/l 00530	E	10,000	NA	20	10	100	NA	NA	NA
Specific Conductance micromho/cm at 25° C 00095	D	NA	NA	X	NA	NA	NA	NA	NA
Settleable Matter (residue) ml/l 00545	D	NA	NA	NA	NA	NA	NA	NA	NA

*Other discharges sharing intake flow (serial numbers) (see instructions)

(See Item 26 for explanations A, B, C, D & E)

920980034

FORM APPROVED
OMB No. 158-R0100

DISCHARGE SERIAL NUMBER
361-B

FOR AGENCY USE

17. (Cont'd.)

Parameter and Code			Influent		Effluent					
			Untreated Intake Water (Daily Average) (1)	In-Plant Treated Intake Water (Daily Average) (2)	Daily Average (3)	Minimum Value Observed or Expected During Discharge Activity (4)	Maximum Value Observed or Expected During Discharge Activity (5)	Frequency of Analysis (6)	Number of Analyses (7)	Sample Type (8)
Oil & Grease	00550	E	30	NA	8	5	20	NA	NA	NA
Chromium	01034	E	.10	NA	.10	.05	.20	NA	NA	NA
Copper	01042	E	500	NA	.20	.05	1.0	NA	NA	NA
Iron	01045	E	3,000	NA	.80	.30	1.0	NA	NA	NA
Nickel	01067	E	100	NA	1.00	.50	4.0	NA	NA	NA
Zinc	01092	E	50	NA	2.00	1.50	3.0	NA	NA	NA

(See Item 26 for explanation of E)

18. **Plant Controls** Check if the following plant controls are available for this discharge.

Alternate power source for major pumping facility. ☐ APS

Alarm or emergency procedure for power or equipment failure ☐ ALM

Complete Item 19 if discharge is from cooling and/or steam water generation and water treatment additives are used.

19. **Water Treatment Additives** If the discharge is treated with any conditioner, inhibitor, or algicide, answer the following:

a. Name of Material(s) 219a: 1) Percol 726 Polymer
2) Caustic Soda

b. Name and address of manufacturer 219b: 1) Allied Colloids, Inc.
1 Robinson Lane, Ridgewood, N.J. 07450
2) Kramer Chemical Inc.
935 Allwood Rd. Clifton, N.J. 07012

c. Quantity (pounds added per million gallons of water treated). 219c: F

920980035

FOR AGENCY USE

c. Chemical composition of these additives (see instructions). 219d — NA

Complete items 20-25 if there is a thermal discharge (e.g., associated with a steam and/or power generation plant, steel mill, petroleum refinery, or any other manufacturing process) and the total discharge flow is 10 million gallons per day or more. (see instructions)

20. Thermal Discharge Source Check the appropriate item(s) indicating the source of the discharge. (see instructions) — 220 — NA

- Boiler Blowdown — ☐ BLBD
- Boiler Chemical Cleaning — ☐ BCCL
- Ash Pond Overflow — ☐ APOF
- Boiler Water Treatment — Evaporator Blowdown — ☐ EPBD
- Oil or Coal Fired Plants — Effluent from Air Pollution Control Devices — ☐ OCFP
- Condense Cooling Water — ☐ COND
- Cooling Tower Blowdown — ☐ CTBD
- Manufacturing Process — ☐ MFPR
- Other — ☐ OTHR

21. Discharge/Receiving Water Temperature Difference

Give the maximum temperature difference between the discharge and receiving waters for summer and winter operating conditions. (see instructions)

- Summer — 221a — NA °F.
- Winter — 221b — NA °F.

22. Discharge Temperature, Rate of Change Per Hour — 222 — NA °F./hour

Give the maximum possible rate of temperature change per hour of discharge under operating conditions. (see instructions)

23. Water Temperature, Percentile Report (Frequency of Occurrence)

In the table below, enter the temperature which is exceeded 10% of the year, 5% of the year, 1% of the year and not at all (maximum yearly temperature). (see instructions)

Frequency of occurrence	10%	5%	1%	Maximum
a. Intake Water Temperature (Subject to natural changes) — 223a	NA °F	°F	°F	°F
b. Discharge Water Temperature — 223b	NA °F	°F	°F	°F

24. Water Intake Velocity (see instructions) — 224 — NA feet/sec.

25. Retention Time Give the length of time, in minutes, from start of water temperature rise to discharge of cooling water. (see instructions) — 225 — NA minutes

920980036

DISCHARGE SERIAL NUMBER

361-B

FOR AGENCY USE

28. Additional Information

Item	Information
203	Engineering Reports were submitted to USEPA and NJDEP on September 3, 1976.
209b	Average will be less than once per week.
216	This discharge is city water and demineralized water used for metal cleaning. Certain parameters (i.e. aluminum, arsnic, beryllium, barium, cadmium, lead, mercury, molybdenum, and titanium) are checked because trace amounts may be present in treated wash water effluents. The fuels burned may contain these elements.
217a	A = The flow figures are estimated. The discharge flow will be continuously monitored when the treatment facility is in operation.
	B = pH of the treatment facility effluent is not continuously monitored. The pH is continuously monitored in the main circulating water canal just prior to the outfall. This is downstream from the point where the facility discharge enters the canal. It is expected to vary from 6.0 to 9.0.
	C = Temperature data is estimated. The discharges from the facility will be a combination of city water and ambient temperatures. In the case of boiler chemical cleanings, the maximum temperature indicated would be expected.
	D = Since this is a new facility, expected to go into operation on or about December 1, 1979, no data is available, and estimates are not practicable at this time.
	E = These data are estimates, based on data obtained from laboratory experiments.
219a	Present polymer being considered. However others may be used in the future.
	F = Sufficient 50% caustic soda is added to raise the pH of the untreated wastes to approximately 9.6, and polymer is added to give a concentration of 3-5 mg/l.

920980037

FORM APPROVED
OMB No. 158-R0100

STANDARD FORM C – MANUFACTURING AND COMMERCIAL

FOR AGENCY USE

SECTION II. BASIC DISCHARGE DESCRIPTION

Complete this section for each discharge indicated in Section I, Item 9, that is to surface waters. This includes discharges to municipal sewerage systems in which the wastewater does not go through a treatment works prior to being discharged to surface waters. Discharges to wells must be described where there are also discharges to surface waters from this facility. SEPARATE DESCRIPTIONS OF EACH DISCHARGE ARE REQUIRED EVEN IF SEVERAL DISCHARGES ORIGINATE IN THE SAME FACILITY. All values for an existing discharge should be representative of the twelve previous months of operation. If this is a proposed discharge, values should reflect best engineering estimates.

ADDITIONAL INSTRUCTIONS FOR SELECTED ITEMS APPEAR IN SEPARATE INSTRUCTION BOOKLET AS INDICATED. REFER TO BOOKLET BEFORE FILLING OUT THESE ITEMS.

1. Discharge Serial No. and Name		
a. Discharge Serial No. (see instructions)	201a	362
b. Discharge Name Give name of discharge, if any. (see instructions)	201b	Ash Pond Overflow
c. Previous Discharge Serial No. If previous permit application was made for this discharge (see Item 4, Section I), provide previous discharge serial number.	201c	362
2. Discharge Operating Dates		
a. Discharge Began Date If the discharge described below is in operation, give the date (within best estimate) the discharge began.	202a	64 12 (YR MO)
b. Discharge to Begin Date If the discharge has never occurred but is planned for some future date, give the date (within best estimate) the discharge will begin.	202b	NA (YR MO)
c. Discharge to End Date If discharge is scheduled to be discontinued within the next 5 years, give the date (within best estimate) the discharge will end.	202c	NA (YR MO)
3. Engineering Report Available Check if an engineering report is available to reviewing agency upon request. (see instructions)	203	☐
4. Discharge Location Name the political boundaries within which the point of discharge is located.		Agency Use
State	204a	New Jersey — 204d
County	204b	Hudson — 204e
(If applicable) City or Town	204c	Jersey City — 204f
5. Discharge Point Description Discharge is into (check one): (see instructions)		
Stream (includes ditches, arroyos, and other intermittent watercourses)	205a	☒ STR
Lake		☐ LKE
Ocean		☐ OCE
Municipal Sanitary Wastewater Transport System		☐ MTS
Municipal Combined Sanitary and Storm Transport System		☐ MCS

920980038

DISCHARGE SERIAL NUMBER

362

HUDSON

FOR AGENCY USE

Municipal Storm Water Transport System ☐ STS

Well (injection) ☐ WEL

Other ☐ OTH

If "other" is checked, specify 206b

5. Discharge Point — Lat/Long Give the precise location of the point of discharge to the nearest second.

Latitude 206a: 40 DEG 45 MIN 05 SEC

Longitude 206b: 74 DEG 04 MIN 37 SEC

7. Discharge Receiving Water Name Name the waterway at the point of discharge (see instructions) 207a: Hackensack River

If the discharge is through an outfall that extends beyond the shoreline or is below the mean low water line, complete item 8.

For Agency Use				For Agency Use
Major	Minor	Sub	207c	203e
207b				

8. Offshore Discharge

a. Discharge Distance from Shore 208a: NA feet

b. Discharge Depth Below Water Surface 208b: NA feet

9. Discharge Type and Occurrence

a. Type of Discharge Check whether the discharge is continuous or intermittent. (see instructions) 209a: ☒ (con) Continuous ☐ (int) Intermittent

b. Discharge Occurrence Days per Week Enter the average number of days per week (during periods of discharge) this discharge occurs. 209b: 7 days per week

c. Discharge Occurrence — Months If this discharge normally operates (either intermittently, or continuously) on less than a year-around basis (excluding shutdowns for routine maintenance), check the months during the year when the discharge is operating. (see instructions) 209c: ☐ JAN ☐ FEB ☐ MAR ☐ APR ☐ MAY ☐ JUN ☐ JUL ☐ AUG NA ☐ SEP ☐ OCT ☐ NOV ☐ DEC

Complete items 10 and 11 if "intermittent" is checked in item 9.a. Otherwise, proceed to item 12.

10. Intermittent Discharge Quantity State the average volume per discharge occurrence in thousands of gallons. 210: NA thousand gallons per discharge occurrence.

11. Intermittent Discharge Duration and Frequency

a. Intermittent Discharge Duration Per Day State the average number of hours per day the discharge is operating. 211a: NA hours per day

b. Intermittent Discharge Frequency State the average number of discharge occurrences per day during days when discharging. 211b: NA discharge occurrences per day

12. Maximum Flow Period Give the time period in which the maximum flow of this discharge occurs. 212: From 1 (month) to 12 (month)

EPA Form 7550-23 (7-73)

II-2

920980039

DISCHARGE SERIAL NUMBER
362

HUDSON
FORM APPROVED
OMB No. 158-R0100

FOR AGENCY USE

13. Activity Description Give a narrative description of activity producing this discharge.(see instructions)

213a This effluent is river water used to transport fly ash and slag to the Ash Pond. The ash and slag remain in the pond while the transport water overflows a weir and is returned to the river.

14. Activity Causing Discharge For each SIC Code which describes the activity causing this discharge, supply the type and maximum amount of either the raw material consumed (item 14a) or the product produced (item 14b) in the units specified in Table I of the instruction Booklet. For SIC Codes not listed in Table I, use raw material or production units normally used for measuring production.(see instructions)

a. Raw Materials

214a	SIC Code (1)	Name (2)	Maximum Amount/Day (3)	Unit (See Table I) (4)	Shared Discharges (Serial Number) (5)
	NA				

b. Products

214b	SIC Code (1)	Name (2)	Maximum Amount/Day (3)	Unit (See Table I) (4)	Shared Discharges (Serial Number) (5)
	4931	Electricity	25,488	mwhrs	NONE

920980040

DISCHARGE SERIAL NUMBER

362

HUDSON

FOR AGENCY USE

15. Waste Abatement

a. Waste Abatement Practices Describe the waste abatement practices used on this discharge with a brief narrative. (See instructions)

215a

Narrative: The river water used for ash handling is retained in the ash pond for settling, prior to passing over a weir and being retained to the river.

b. Waste Abatement Codes Using the codes listed in Table II of the instruction Booklet, describe the waste abatement processes for this discharge in the order in which they occur if possible.

215b

(1) PSEDIM. (2) _____. (3) _____.

(4) _____. (5) _____. (6) _____.

(7) _____. (8) _____. (9) _____.

(10) _____. (11) _____. (12) _____.

(13) _____. (14) _____. (15) _____.

(16) _____. (17) _____. (18) _____.

(19) _____. (20) _____. (21) _____.

(22) _____. (23) ? . (24) _____.

(25) _____.

920980041

DISCHARGE SERIAL NUMBER

362

FORM APPROVED
OMB No. 158-R0100

FOR AGENCY USE

16. Wastewater Characteristics (See item 26)

(Check the box beside each constituent which is present in the effluent (discharge water). This determination is to be based on actual analysis or best estimate (see instructions)

Parameter #16	Present	Parameter #16	Present
Color 00080		Copper 01042	X
Ammonia 00610		Iron 01045	X
Organic nitrogen 00605		Lead 01051	X
Nitrate 00620		Magnesium 00927	
Nitrite 00615		Manganese 01055	X
Phosphorus 00665	X	Mercury 71900	X
Sulfate 00945		Molybdenum 01062	
Sulfide 00745		Nickel 01067	X
Sulfite 00740		Selenium 01147	X
Bromide 71870		Silver 01077	
Chloride 00940	X	Potassium 00937	
Cyanide 00720	X	Sodium 00929	X
Fluoride 00951	X	Thallium 01059	
Aluminum 01105	X	Titanium 01152	X
Antimony 01097		Tin 01102	
Arsenic 01002	X	Zinc 01092	X
Beryllium 01012		Algicides* 74051	
Barium 01007	X	Chlorinated organic compounds* 74052	
Boron 01022		Pesticides* 74053	
Cadmium 01027	X	Oil and grease 00550	
Calcium 00916	X	Phenols 32730	X
Cobalt 01037		Surfactants 38260	
Chromium 01034	X	Chlorine 50060	
Fecal coliform bacteria 74055		Radioactivity* 74050	

*Specify substances, compounds and/or elements in Item 26.

Pesticides (insecticides, fungicides, and rodenticides) must be reported in terms of the acceptable common names specified in *Acceptable Common Names and Chemical Names for the Ingredient Statement on Pesticide Labels*, 2nd Edition, Environmental Protection Agency, Washington, D.C. 20250, June 1972, as required by Subsection 162.7(b) of the Regulations for the Enforcement of the Federal Insecticide, Fungicide, and Rodenticide Act.

920980042

DISCHARGE SERIAL NUMBER
362

HUDSON

FOR AGENCY USE

17. Description of Intake and Discharge

For each of the parameters listed below, enter in the appropriate box the value or code letter answer called for. (See instructions)

In addition, enter the parameter name and code and all required values for any of the following parameters if they were checked in Item 16: ammonia, cyanide, aluminum, arsenic, beryllium, cadmium, chromium, copper, lead, mercury, nickel, selenium, zinc, phenols, oil and grease, and chlorine (residual).

Parameter and Code 17a		Influent		Effluent					
		Untreated Intake Water (Daily Average) (1)	In-Plant Treated Intake Water (Daily Average) (2)	Daily Average (3)	Minimum Value Observed or Expected During Discharge Activity (4)	Maximum Value Observed or Expected During Discharge Activity (5)	Frequency of Analysis (6)	Number of Analyses (7)	Sample Type (8)
Flow* Gallons per day 50050	A	6.5	NA	6.5	1.00	6.5	calc.	NA	NA
pH Units 00400	B	6.9	NA	X	6.0	7.74	4/7	100	GR
Temperature (winter) °F 74028	C	39	NA	39	33	42	NA	NA	NA
Temperature (Summer) °F 74027	C	82	NA	82	79	85	NA	NA	NA
Biochemical Oxygen Demand (BOD 5-day) mg/l 00310	D	NA	NA	NA	NA	NA	NA	NA	NA
Chemical Oxygen Demand (COD) mg/l 00340	D	NA	NA	NA	NA	NA	NA	NA	NA
Total Suspended (nonfilterable) Solids mg/l 00530 (NET)	E	28	NA	16	0	60	1/30	9	24
Specific Conductance micromhos/cm at 25° C 00095	D	NA	NA	X	NA	NA	NA	NA	NA
Settleable Matter (residue) ml/l 00545	D	NA	NA	NA	NA	NA	NA	NA	NA

*Other discharges sharing intake flow (serial numbers) (see instructions)

(See Item 26 for explanations of A, B, C, D, E & F)

920980043

FORM APPROVED
OMB No. 158-R0100

DISCHARGE SERIAL NUMBER
362

FOR AGENCY USE

17. (Cont'd.)

Parameter and Code		Influent		Effluent					
		Untreated Intake Water (Daily Average) (1)	In-Plant Treated Intake Water (Daily Average) (2)	Daily Average (3)	Minimum Value Observed or Expected During Discharge Activity (4)	Maximum Value Observed or Expected During Discharge Activity (5)	Frequency of Analysis (6)	Number of Analyses (7)	Sample Type (8)
Aluminum		NA	NA	NA	NA	NA	NA	NA	NA
Arsnic	F	.001	NA	0.020	LT.001	0.052	NA	NA	NA
Beryllium		NA	NA	NA	NA	NA	NA	NA	NA
Cadmium	F	.005	NA	.003	.0006	.004	NA	NA	NA
Chromium(Hex.)	F	.006	NA	.003	.008	.015	NA	NA	NA
Copper	F	.009	NA	.030	.012	.061	NA	NA	NA
Lead	F	.030	NA	.020	.005	.060	NA	NA	NA

18. Plant Controls Check if the following plant controls are available for this discharge.

Alternate power source for major pumping facility. 218 ☒ APS

Alarm or emergency procedure for power or equipment failure ☒ ALM

Complete Item 19 if discharge is from cooling and/or steam water generation and water treatment additives are used.

19. Water Treatment Additives If the discharge is treated with any conditioner, inhibitor, or algicide, answer the following:

a. Name of Material(s) 219a NA

b. Name and address of manufacturer 219b NA

c. Quantity (pounds added per million gallons of water treated). 219c NA

920980044

DISCHARGE SERIAL NUMBER
362

FORM APPROVED
OMB No. 158-R0100

FOR AGENCY USE

19. (Cont'd.)

Parameter and Code		Influent		Effluent					
		Untreated Intake Water (Daily Average) (1)	In-Plant Treated Intake Water (Daily Average) (2)	Daily Average (3)	Minimum Value Observed or Expected During Discharge Activity (4)	Maximum Value Observed or Expected During Discharge Activity (5)	Frequency of Analysis (6)	Number of Analyses (7)	Sample Type (8)
Mercury	F	.0006	NA	.0007	.0001	.002	NA	NA	NA
Nickel	F	.030	NA	.030	.014	.034	NA	NA	NA
Selenium	F	.003	NA	.010	.005	.018	NA	NA	NA
Zinc	F	.070	NA	.100	.028	.300	NA	NA	NA
Oil & Grease		NA	NA	NA	NA	NA	NA	NA	NA

920980045

c. Chemical composition of these additives (see instructions). 219d — NA

Complete items 20-25 if there is a thermal discharge (e.g., associated with a steam and/or power generation plant, steel mill, petroleum refinery, or any other manufacturing process) and the total discharge flow is 10 million gallons per day or more. (see instructions)

20. Thermal Discharge Source Check the appropriate item(s) indicating the source of the discharge. (see instructions) — 220

- ☐ Boiler Blowdown — ☐ BLBD
- ☐ Boiler Chemical Cleaning — ☐ BCCL
- ☐ Ash Pond Overflow — ☐ APOF
- ☐ Boiler Water Treatment — Evaporator Blowdown — ☐ EPBD
- ☐ Oil or Coal Fired Plants — Effluent from Air Pollution Control Devices — ☐ OCFP NA
- ☐ Condense Cooling Water — ☐ COND
- ☐ Cooling Tower Blowdown — ☐ CTBD
- ☐ Manufacturing Process — ☐ MFPR
- ☐ Other — ☐ OTHR

21. Discharge/Receiving Water Temperature Difference

Give the maximum temperature difference between the discharge and receiving waters for summer and winter operating conditions. (see instructions)

- Summer — 221a — NA °F.
- Winter — 221b — NA °F.

22. Discharge Temperature, Rate of Change Per Hour — 222 — NA °F./hour

Give the maximum possible rate of temperature change per hour of discharge under operating conditions. (see instructions)

23. Water Temperature, Percentile Report (Frequency of Occurrence)

In the table below, enter the temperature which is exceeded 10% of the year, 5% of the year, 1% of the year and not at all (maximum yearly temperature). (see instructions)

Frequency of occurrence	10%	5%	1%	Maximum
a. Intake Water Temperature (Subject to natural changes) 223a	NA °F	°F	°F	°F
b. Discharge Water Temperature 223b	NA °F	°F	°F	°F

24. Water Intake Velocity (see instructions) — 224 — NA feet/sec.

25. Retention Time Give the length of time, in minutes, from start of water temperature rise to discharge of cooling water. (see instructions) — 225 — NA minutes

920980046

HUDSON
FORM APPROVED
OMB No. 158-R0100

DISCHARGE SERIAL NUMBER

362

FOR AGENCY USE

28. Additional Information

Item	Information
216	It is estimated that some heavy metals may be present in this discharge because of the possibility of traces being present in the different coals being burned.
217a	The concentrations of all parameters in this discharge, due to its configuration, must be considered on a NET basis. The discharge data presented however, are on a gross basis except for TSS.
217a	A = Flow data are estimated, based on equipment design flow rates and operating procedures. B = Data are based on analyses performed during the previous 12 month period. C = Temperatures are best estimates. They will be within a few degrees of the existing river water temperature with some change due also to ambient conditions. D = Since these analyses were not required by the existing N.P.D.E.S. permit, they were not performed and hence no data are available. E = Data are based on analyses performed on this discharge during the previous 12 months NOTE: The TSS effluent data are given on a NET basis since river water is being used for transport and is being returned to the river. F = Data are estimates.

920980047

FORM APPROVED
OMB No. 158-R0700

STANDARD FORM C – MANUFACTURING AND COMMERCIAL

FOR AGENCY USE

SECTION II. BASIC DISCHARGE DESCRIPTION

Complete this section for each discharge indicated in Section I, Item 9, that is to surface waters. This includes discharges to municipal sewerage systems in which the wastewater does not go through a treatment works prior to being discharged to surface waters. Discharges to wells must be described where there are also discharges to surface waters from this facility. SEPARATE DESCRIPTIONS OF EACH DISCHARGE ARE REQUIRED EVEN IF SEVERAL DISCHARGES ORIGINATE IN THE SAME FACILITY. All values for an existing discharge should be representative of the twelve previous months of operation. If this is a proposed discharge, values should reflect best engineering estimates.

ADDITIONAL INSTRUCTIONS FOR SELECTED ITEMS APPEAR IN SEPARATE INSTRUCTION BOOKLET AS INDICATED. REFER TO BOOKLET BEFORE FILLING OUT THESE ITEMS.

1. **Discharge Serial No. and Name**

   a. **Discharge Serial No.** (see instructions) — 201a: 363

   b. **Discharge Name** Give name of discharge, if any. (see instructions) — 201b: Gas Turbine Cooling Water

   c. **Previous Discharge Serial No.** If previous permit application was made for this discharge (see Item 4, Section I), provide previous discharge serial number. — 201c: 363

2. **Discharge Operating Dates**

   a. **Discharge Began Date** If the discharge described below is in operation, give the date (within best estimate) the discharge began. — 202a: 67 (YR) 12 (MO)

   b. **Discharge to Begin Date** If the discharge has never occurred but is planned for some future date, give the date (within best estimate) the discharge will begin. — 202b: NA (YR) (MO)

   c. **Discharge to End Date** If discharge is scheduled to be discontinued within the next 5 years, give the date (within best estimate) the discharge will end. — 202c: NA (YR) (MO)

3. **Engineering Report Available** Check if an engineering report is available to reviewing agency upon request. (see instructions) — 203: ☐

4. **Discharge Location** Name the political boundaries within which the point of discharge is located.

			Agency Use
State	204a: New Jersey	204d	
County	204b: Hudson	204e	
(If applicable) City or Town	204c: Jersey City	204f	

5. **Discharge Point Description** Discharge is into (check one): (see instructions)

Stream (includes ditches, arroyos, and other intermittent watercourses)	205a: ☑ STR
Lake	☐ LKE
Ocean	☐ OCE
Municipal Sanitary Wastewater Transport System	☐ MTS
Municipal Combined Sanitary and Storm Transport System	☐ MCS

EPA Form 7550-22 (7-73)

*This section contains 9 pages.

920980048

DISCHARGE SERIAL NUMBER

363

HUDSON

FOR AGENCY USE

Municipal Storm Water Transport System ☐ STS

Well (injection) ☐ WEL

Other ☐ OTH

If 'other' is checked, specify 206b

6. Discharge Point — Lat/Long Give the precise location of the point of discharge to the nearest second.

Latitude 206a: 40 DEG 44 MIN 58 SEC

Longitude 206b: 74 DEG 04 MIN 29 SEC

7. Discharge Receiving Water Name Name the waterway at the point of discharge.(see instructions) 207a: Hackensack River

If the discharge is through an outfall that extends beyond the shoreline or is below the mean low water line, complete item 8.

For Agency Use				For Agency Use
Major	Minor	Sub	207b	207c / 303e

8. Offshore Discharge

a. Discharge Distance from Shore 208a: NA feet

b. Discharge Depth Below Water Surface 208b: NA feet

9. Discharge Type and Occurrence

a. Type of Discharge Check whether the discharge is continuous or intermittent. (see instructions) 209a:

☐ (con) Continuous

☒ (int) Intermittent

b. Discharge Occurrence Days per Week Enter the average number of days per week (during periods of discharge) this discharge occurs. 209b: 2 days per week

c. Discharge Occurrence — Months If this discharge normally operates (either intermittently, or continuously) on less than a year-around basis (excluding shutdowns for routine maintenance), check the months during the year when the discharge is operating. (see instructions) 209c:

☐ JAN ☐ FEB ☐ MAR ☐ APR

☒ MAY ☒ JUN ☒ JUL ☒ AUG

☒ SEP ☐ OCT ☐ NOV ☐ DEC

Complete items 10 and 11 if "intermittent" is checked in item 9.a. Otherwise, proceed to item 12.

10. Intermittent Discharge Quantity State the average volume per discharge occurrence in thousands of gallons. 210: 420 thousand gallons per discharge occurrence.

11. Intermittent Discharge Duration and Frequency

a. Intermittent Discharge Duration Per Day State the average number of hours per day the discharge is operating. 211a: 4.5 hours per day

b. Intermittent Discharge Frequency State the average number of discharge occurrences per day during days when discharging. 211b: 1 discharge occurrences per day

12. Maximum Flow Period Give the time period in which the maximum flow of this discharge occurs. 212: From 5 (month) to 9 (month)

920980049

HUDSON

DISCHARGE SERIAL NUMBER
363

FORM APPROVED
OMB No. 158-R0100

FOR AGENCY USE

13. Activity Description Give a narrative description of activity producing this discharge.(see instructions)

213a Production of Electricity using Oil-fired gas turbine engines driving electric generators

14. Activity Causing Discharge For each SIC Code which describes the activity causing this discharge, supply the type and maximum amount of either the raw material consumed (item 14a) or the product produced (item 14b) in the units specified in Table I of the Instruction Booklet. For SIC Codes not listed in Table I, use raw material or production units normally used for measuring production.(see instructions)

a. Raw Materials

214a

SIC Code (1)	Name (2)	Maximum Amount/Day (3)	Unit (See Table I) (4)	Shared Discharges (Serial Number) (5)
NA				

b. Products

214b

SIC Code (1)	Name (2)	Maximum Amount/Day (3)	Unit (See Table I) (4)	Shared Discharges (Serial Number) (5)
4931	Electricity	3,240	mwhrs	None

920980050

DISCHARGE SERIAL NUMBER

363

HUDSON

FOR AGENCY USE

15. Waste Abatement

a. Waste Abatement Practices
Describe the waste abatement practices used on this discharge with a brief narrative. (see instructions)

215a

Narrative: NONE

b. Waste Abatement Codes
Using the codes listed in Table II of the Instruction Booklet, describe the waste abatement processes for this discharge in the order in which they occur if possible.

215b

(1) NONONE. (2) _____. (3) _____.

(4) _____. (5) _____. (6) _____.

(7) _____. (8) _____. (9) _____.

(10) _____. (11) _____. (12) _____.

(13) _____. (14) _____. (15) _____.

(16) _____. (17) _____. (18) _____.

(19) _____. (20) _____. (21) _____.

(22) _____. (23) ?. (24) _____.

(25) _____.

920980051

DISCHARGE SERIAL NUMBER

363

HUDSON
FORM APPROVED
OMB No. 158-R0100

FOR AGENCY USE

16. Wastewater Characteristics (See Item 26)

Check the box beside each constituent which is present in the effluent (discharge water). This determination is to be based on actual analysis or best estimate (see instructions)

Parameter B16	Present	Parameter B16	Present
Color 00080		Copper 01042	
Ammonia 00610		Iron 01045	
Organic nitrogen 00605		Lead 01051	
Nitrate 00620		Magnesium 00927	
Nitrite 00615		Manganese 01055	
Phosphorus 00665		Mercury 71900	
Sulfate 00945		Molybdenum 01062	
Sulfide 00745		Nickel 01067	
Sulfite 00740		Selenium 01147	
Bromide 71870		Silver 01077	
Chloride 00940		Potassium 00937	
Cyanide 00720		Sodium 00929	
Fluoride 00951		Thallium 01059	
Aluminum 01105		Titanium 01152	
Antimony 01097		Tin 01102	
Arsenic 01002		Zinc 01092	
Beryllium 01012		Algicides* 74051	
Barium 01007		Chlorinated organic compounds* 74052	
Boron 01022		Pesticides* 74053	
Cadmium 01027		Oil and grease 00550	
Calcium 00916		Phenols 32730	
Cobalt 01037		Surfactants 38260	
Chromium 01034		Chlorine 50060	X
Fecal coliform bacteria 74055		Radioactivity* 74050	

*Specify substances, compounds and/or elements in Item 26.

Pesticides (insecticides, fungicides, and rodenticides) must be reported in terms of the acceptable common names specified in *Acceptable Common Names and Chemical Names for the Ingredient Statement on Pesticide Labels*, 2nd Edition, Environmental Protection Agency, Washington, D.C. 20250, June 1972, as required by Subsection 162.7(b) of the Regulations for the Enforcement of the Federal Insecticide, Fungicide, and Rodenticide Act.

920980052

DISCHARGE SERIAL NUMBER

363

HUDSON

FOR AGENCY USE

17. Description of Intake and Discharge

For each of the parameters listed below, enter in the appropriate box the value or code letter answer called for.(see instructions)

In addition, enter the parameter name and code and all required values for any of the following parameters if they were checked in Item 16: ammonia, cyanide, aluminum, arsenic, beryllium, cadmium, chromium, copper, lead, mercury, nickel, selenium, zinc, phenols, oil and grease, and chlorine (residual).

Parameter and Code		Influent		Effluent					
		Untreated Intake Water (Daily Average) (1)	In-Plant Treated Intake Water (Daily Average) (2)	Daily Average (3)	Minimum Value Observed or Expected During Discharge Activity (4)	Maximum Value Observed or Expected During Discharge Activity (5)	Frequency of Analysis (6)	Number of Analyses (7)	Sample Type (8)
Flow* [redacted] 50050	C	.09	NA	9.96	4.00	11.62	NA	NA	NA
pH Units 00400	D	6.9	NA	X	6.4	7.9	NA	NA	NA
Temperature (winter) °F 74028	B	38	NA	46	43	52	NA	NA	NA
Temperature (summer) °F 74027	B	78	NA	86	84	91	NA	NA	NA
Biochemical Oxygen Demand (BOD 5-day) mg/l 00310	A	NA	NA	NA	NA	NA	NA	NA	NA
Chemical Oxygen Demand (COD) mg/l 00340	A	NA	NA	NA	NA	NA	NA	NA	NA
Total Suspended (nonfilterable) Solids mg/l 00530	A	NA	NA	NA	NA	NA	NA	NA	NA
Specific Conductance micromhos/cm at 25° C 00095	A	NA	NA	X	NA	NA	NA	NA	NA
Settleable Matter (residue) ml/l 00545	A	NA	NA	NA	NA	NA	NA	NA	NA

*Other discharges sharing intake flow (serial numbers).(see instructions)

(See Item 26 for explanation of A, B, C, & D)

920980053

FORM APPROVED
OMB No. 158-R0100

DISCHARGE SERIAL NUMBER
363

FOR AGENCY USE

17. (Cont'd.)

Parameter and Code	Influent		Effluent					
	Untreated Intake Water (Daily Average) (1)	In-Plant Treated Intake Water (Daily Average) (2)	Daily Average (3)	Minimum Value Observed or Expected During Discharge Activity (4)	Maximum Value Observed or Expected During Discharge Activity (5)	Frequency of Analysis (6)	Number of Analyses (7)	Sample Type (8)
NA								

18. Plant Controls Check if the following plant controls are available for this discharge.

Alternate power source for major pumping facility. ☒ APS

Alarm or emergency procedure for power or equipment failure ☒ ALM

Complete Item 19 if discharge is from cooling and/or steam water generation and water treatment additives are used.

19. Water Treatment Additives If the discharge is treated with any conditioner, inhibitor, or algicide, answer the following:

a. Name of Material(s) 219a NA

b. Name and address of manufacturer 219b NA

c. Quantity (pounds added per million gallons of water treated). 219c NA

920980054

c. Chemical composition of these additives (see instructions). 219c — NA

Complete items 20-25 if there is a thermal discharge (e.g., associated with a steam and/or power generation plant, steel mill, petroleum refinery, or any other manufacturing process) and the total discharge flow is 10 million gallons per day or more. (see instructions)

20. Thermal Discharge Source Check the appropriate item(s) indicating the source of the discharge. (see instructions) 220 — NA

- ☐ Boiler Blowdown — ☐ BLBD
- ☐ Boiler Chemical Cleaning — ☐ BCCL
- ☐ Ash Pond Overflow — ☐ APOF
- ☐ Boiler Water Treatment — Evaporator Blowdown — ☐ EPBD
- ☐ Oil or Coal Fired Plants — Effluent from Air Pollution Control Devices — ☐ OCFP
- ☐ Condense Cooling Water — ☐ COND
- ☐ Cooling Tower Blowdown — ☐ CTBD
- ☐ Manufacturing Process — ☐ MFPR
- ☐ Other — ☐ OTHR

21. Discharge/Receiving Water Temperature Difference

Give the maximum temperature difference between the discharge and receiving waters for summer and winter operating conditions. (see instructions)

- Summer 221a — NA °F.
- Winter 221b — NA °F.

22. Discharge Temperature, Rate of Change Per Hour 222 — NA °F./hour

Give the maximum possible rate of temperature change per hour of discharge under operating conditions. (see instructions)

23. Water Temperature, Percentile Report (Frequency of Occurrence)

In the table below, enter the temperature which is exceeded 10% of the year, 5% of the year, 1% of the year and not at all (maximum yearly temperature). (see instructions)

Frequency of occurrence	10%	5%	1%	Maximum
a. Intake Water Temperature (Subject to natural changes) 223a	NA °F	°F	°F	°F
b. Discharge Water Temperature 223b	NA °F	°F	°F	°F

24. Water Intake Velocity (see instructions) 224 — NA feet/sec.

25. Retention Time Give the length of time, in minutes, from start of water temperature rise to discharge of cooling water. (see instructions) 225 — NA minutes

920980055

FORM APPROVED
OMB No. 158-R0100

DISCHARGE SERIAL NUMBER
363

FOR AGENCY USE

26. Additional Information

Item	Information
209c	Gas turbine is used only for peak loading periods. Therefore discharge depends on energy demand. It is most likely to operate in the summer, however, there are a few days in the winter when it may operate.
216	Since this discharge is river water used for non-contact cooling, the parameters present in the effluent are the same as those present in the influent
217a	A - Since present NPDES permit does not require monitoring of this discharge no data are available. B = Temperature data are estimated. C = Flow data is calculated based on pump design flow and service hours. D = The data given for pH are the same as that given for discharge no. 361, since this discharge is the same as no. 501 in function and application.

920980056

HUDSON
FORM APPROVED
OMB No. 158-R0100

FOR AGENCY USE

STANDARD FORM C – MANUFACTURING AND COMMERCIAL

SECTION II. BASIC DISCHARGE DESCRIPTION

Complete this section for each discharge indicated in Section I, item 9, that is to surface waters. This includes discharges to municipal sewerage systems in which the wastewater does not go through a treatment works prior to being discharged to surface waters. Discharges to wells must be described where there are also discharges to surface waters from this facility. SEPARATE DESCRIPTIONS OF EACH DISCHARGE ARE REQUIRED EVEN IF SEVERAL DISCHARGES ORIGINATE IN THE SAME FACILITY. All values for an existing discharge should be representative of the twelve previous months of operation. If this is a proposed discharge, values should reflect best engineering estimates.

ADDITIONAL INSTRUCTIONS FOR SELECTED ITEMS APPEAR IN SEPARATE INSTRUCTION BOOKLET AS INDICATED. REFER TO BOOKLET BEFORE FILLING OUT THESE ITEMS.

1. Discharge Serial No. and Name.

   a. Discharge Serial No. (see instructions) — 201a: 364

   b. Discharge Name Give name of discharge, if any. (see instructions) — 201b: Miscellaneous Auxiliary Cooling water.

   c. Previous Discharge Serial No. If previous permit application was made for this discharge (see item 4, Section I), provide previous discharge serial number. — 201c: 364

2. Discharge Operating Dates

   a. Discharge Began Date If the discharge described below is in operation, give the date (within best estimate) the discharge began. — 202a: 64 (YR) 12 (MO)

   b. Discharge to Begin Date If the discharge has never occurred but is planned for some future date, give the date (within best estimate) the discharge will begin. — 202b: NA (YR) (MO)

   c. Discharge to End Date If discharge is scheduled to be discontinued within the next 5 years, give the date (within best estimate) the discharge will end. — 202c: NA (YR) (MO)

3. Engineering Report Available Check if an engineering report is available to reviewing agency upon request. (see instructions) — 203: ☐

4. Discharge Location Name the political boundaries within which the point of discharge is located.

			Agency Use
State	204a: New Jersey	204d	
County	204b: Hudson	204e	
(If applicable) City or Town	204c: Jersey City	204f	

5. Discharge Point Description Discharge is into (check one): (see instructions)

	205a
Stream (includes ditches, arroyos, and other intermittent watercourses)	☒ STR
Lake	☐ LKE
Ocean	☐ OCE
Municipal Sanitary Wastewater Transport System	☐ MTS
Municipal Combined Sanitary and Storm Transport System	☐ MCS

920980057

DISCHARGE SERIAL NUMBER

364

HUDSON

FOR AGENCY USE

Municipal Storm Water Transport System ☐ STS

Well (injection) ☐ WEL

Other ☐ OTH

If 'other' is checked, specify 206b

6. Discharge Point — Lat/Long Give the precise location of the point of discharge to the nearest second.

Latitude 206a: 40 DEG 44 MIN 52 SEC

Longitude 206b: 74 DEG 04 MIN 26 SEC

7. Discharge Receiving Water Name Name the waterway at the point of discharge.(see instructions) 207a: Hackensack River

If the discharge is through an outfall that extends beyond the shoreline or is below the mean low water line, complete item 8.

For Agency Use				For Agency Use
Major	Minor	Sub	207b	303e
			207c	

8. Offshore Discharge

a. Discharge Distance from Shore 208a: NA feet

b. Discharge Depth Below Water Surface 208b: NA feet

9. Discharge Type and Occurrence

a. Type of Discharge Check whether the discharge is continuous or intermittent. (see instructions) 209a:

☒ (con) Continuous

☐ (int) Intermittent

b. Discharge Occurrence Days per Week Enter the average number of days per week (during periods of discharge) this discharge occurs. 209b: 7 days per week

c. Discharge Occurrence — Months If this discharge normally operates (either intermittently, or continuously) on less than a year-around basis (excluding shutdowns for routine maintenance), check the months during the year when the discharge is operating. (see instructions) 209c:

☐ JAN ☐ FEB ☐ MAR ☐ APR

☐ MAY ☐ JUN ☐ JUL ☐ AUG NA

☐ SEP ☐ OCT ☐ NOV ☐ DEC

Complete items 10 and 11 if "Intermittent" is checked in item 9.a. Otherwise, proceed to item 12.

10. Intermittent Discharge Quantity State the average volume per discharge occurrence in thousands of gallons. 210: NA thousand gallons per discharge occurrence.

11. Intermittent Discharge Duration and Frequency

a. Intermittent Discharge Duration Per Day State the average number of hours per day the discharge is operating. 211a: NA hours per day

b. Intermittent Discharge Frequency State the average number of discharge occurrences per day during days when discharging. 211b: NA discharge occurrences per day

12. Maximum Flow Period Give the time period in which the maximum flow of this discharge occurs. 212: From 1 month to 12 month

920980058

DISCHARGE SERIAL NUMBER

364

HUDSON
FORM APPROVED
OMB No. 158-R0100

FOR AGENCY USE

13. Activity Description Give a narrative description of activity producing this discharge.(see instructions)

218a | Production of electricity using fossil fuel fired boilers producing high pressure steam driving turbine - generators.

14. Activity Causing Discharge For each SIC Code which describes the activity causing this discharge, supply the type and maximum amount of either the raw material consumed (item 14a) or the product produced (item 14b) in the units specified in Table I of the Instruction Booklet. For SIC Codes not listed in Table I, use raw material or production units normally used for measuring production.(see instructions)

a. Raw Materials

218a	SIC Code (1)	Name (2)	Maximum Amount/Day (3)	Unit (See Table I) (4)	Shared Discharges (Serial Number) (5)
	NA				

b. Products

218b	SIC Code (1)	Name (2)	Maximum Amount/Day (3)	Unit (See Table I) (4)	Shared Discharges (Serial Number) (5)
	4931	Electricity	25,488	mwhrs.	None

920980059

DISCHARGE SERIAL NUMBER

364

HUDSON

FOR AGENCY USE

15. Waste Abatement

a. Waste Abatement Practices
Describe the waste abatement practices used on this discharge with a brief narrative. (see instructions)

215a

Narrative: NONE

b. Waste Abatement Codes
Using the codes listed in Table II of the instruction Booklet, describe the waste abatement processes for this discharge in the order in which they occur if possible.

215b

(1) NONONE. (2) _____. (3) _____.

(4) _____. (5) _____. (6) _____.

(7) _____. (8) _____. (9) _____.

(10) _____. (11) _____. (12) _____.

(13) _____. (14) _____. (15) _____.

(16) _____. (17) _____. (18) _____.

(19) _____. (20) _____. (21) _____.

(22) _____. (23) ?. (24) _____.

(25) _____.

920980060

HUDSON
FORM APPROVED
OMB No. 158-R0100

DISCHARGE SERIAL NUMBER

364

FOR AGENCY USE

(See Item 26)

16. Wastewater Characteristics

Check the box beside each constituent which is present in the effluent (discharge water). This determination is to be based on actual analysis or best estimate.(see instructions)

Parameter #16	Present	Parameter #15	Present
Color 00080		Copper 01042	
Ammonia 00610		Iron 01045	
Organic nitrogen 00605		Lead 01051	
Nitrate 00620		Magnesium 00927	
Nitrite 00615		Manganese 01055	
Phosphorus 00665		Mercury 71900	
Sulfate 00945		Molybdenum 01062	
Sulfide 00745		Nickel 01067	
Sulfite 00740		Selenium 01147	
Bromide 71870		Silver 01077	
Chloride 00940		Potassium 00937	
Cyanide 00720		Sodium 00929	
Fluoride 00951		Thallium 01059	
Aluminum 01105		Titanium 01152	
Antimony 01097		Tin 01102	
Arsenic 01002		Zinc 01092	
Beryllium 01012		Algicides* 74051	
Barium 01007		Chlorinated organic compounds* 74052	
Boron 01022		Pesticides* 74053	
Cadmium 01027		Oil and grease 00550	X
Calcium 00916		Phenols 32730	
Cobalt 01037		Surfactants 38260	
Chromium 01034		Chlorine 50060	X
Fecal coliform bacteria 74055		Radioactivity* 74050	

*Specify substances, compounds and/or elements in Item 26.

Pesticides (insecticides, fungicides, and rodenticides) must be reported in terms of the acceptable common names specified in *Acceptable Common Names and Chemical Names for the Ingredient Statement on Pesticide Labels*, 2nd Edition, Environmental Protection Agency, Washington, D.C. 20250, June 1972, as required by Subsection 162.7(b) of the Regulations for the Enforcement of the Federal Insecticide, Fungicide, and Rodenticide Act.

920980061

DISCHARGE SERIAL NUMBER
364

HUDSON

FOR AGENCY USE

17. Description of Intake and Discharge

For each of the parameters listed below, enter in the appropriate box the value or code letter answer called for.(see instructions)

In addition, enter the parameter name and code and all required values for any of the following parameters if they were checked in Item 16: ammonia, cyanide, aluminum, arsenic, beryllium, cadmium, chromium, copper, lead, mercury, nickel, selenium, zinc, phenols, oil and grease, and chlorine (residual).

Parameter and Code		Influent		Effluent					
		Untreated Intake Water (Daily Average) (1)	In-Plant Treated Intake Water (Daily Average) (2)	Daily Average (3)	Minimum Value Observed or Expected During Discharge Activity (4)	Maximum Value Observed or Expected During Discharge Activity (5)	Frequency of Analysis (6)	Number of Analyses (7)	Sample Type (8)
Flow* [illegible] 50050	B	NA	.01	.01	0	.02	calc.	NA	NA
pH Units 00400	A	NA	NA	X	NA	NA	NA	NA	NA
Temperature (winter) °F 74028	C	NA	42	48	45	51	NA	NA	NA
Temperature (summer) °F 74027	C	NA	78	85	81	87	NA	NA	NA
Biochemical Oxygen Demand (BOD 5-day) mg/l 00310	A	NA	NA	NA	NA	NA	NA	NA	NA
Chemical Oxygen Demand (COD) mg/l 00340	A	NA	NA	NA	NA	NA	NA	NA	NA
Total Suspended (nonfilterable) Solids mg/l 00530	A	NA	NA	NA	NA	NA	NA	NA	NA
Specific Conductance micromhos/cm at 25° C 00095	A	NA	NA	X	NA	NA	NA	NA	NA
Settleable Matter (residue) ml/l 00545	A	NA	NA	NA	NA	NA	NA	NA	NA

*Other discharges sharing intake flow (serial numbers).(see instructions)

(See item 26 for explanations of A, B, C, D & E)

920980062

FORM APPROVED
OMB No. 158-R0100

DISCHARGE SERIAL NUMBER
364

FOR AGENCY USE

17. (Cont'd.)

Parameter and Code 217a	Influent		Effluent					
	Untreated Intake Water (Daily Average) (1)	In-Plant Treated Intake Water (Daily Average) (2)	Daily Average (3)	Minimum Value Observed or Expected During Discharge Activity (4)	Maximum Value Observed or Expected During Discharge Activity (5)	Frequency of Analysis (6)	Number of Analyses (7)	Sample Type (8)
Oil & Grease 00550 D	-	2.0	4.0	1.0	10.0	NA	NA	NA
Chlorine E	-	5	0.0	0.0	0.2	NA	NA	NA

18. Plant Controls Check if the following plant controls are available for this discharge.

Alternate power source for major pumping facility.

Alarm or emergency procedure for power or equipment failure

Complete Item 19 if discharge is from cooling and/or steam water generation and water treatment additives are used.

219 ☒ APS

☒ ALM

19. Water Treatment Additives If the discharge is treated with any conditioner, inhibitor, or sigicide, answer the following:

a. Name of Material(s) 219a: Chlorine

b. Name and address of manufacturer 219b: Linden Chlorine Products
P.O. Box 484
Linden, N.J. 07036

c. Quantity (pounds added per million gallons of water treated). 219c: 40

920980063

DISCHARGE SERIAL NUMBER
364

FOR AGENCY USE

c. Chemical composition of these additives (see instructions). 219d — Cl_2

Complete items 20-25 if there is a thermal discharge (e.g., associated with a steam and/or power generation plant, steel mill, petroleum refinery, or any other manufacturing process) and the total discharge flow is 10 million gallons per day or more. (see instructions)

20. Thermal Discharge Source Check the appropriate item(s) indicating the source of the discharge. (see instructions) 220 — NA

- ☐ Boiler Blowdown — ☐ BLSD
- ☐ Boiler Chemical Cleaning — ☐ BCCL
- ☐ Ash Pond Overflow — ☐ APOF
- ☐ Boiler Water Treatment — Evaporator Blowdown — ☐ EPBD
- ☐ Oil or Coal Fired Plants — Effluent from Air Pollution Control Devices — ☐ OCFP
- ☐ Condense Cooling Water — ☐ COND
- ☐ Cooling Tower Blowdown — ☐ CTBD
- ☐ Manufacturing Process — ☐ MFPR
- ☐ Other — ☐ OTHR

21. Discharge/Receiving Water Temperature Difference

Give the maximum temperature difference between the discharge and receiving waters for summer and winter operating conditions. (see instructions)

- Summer 221a — NA °F.
- Winter 221b — NA °F.

22. Discharge Temperature, Rate of Change Per Hour 222 — NA °F./hour

Give the maximum possible rate of temperature change per hour of discharge under operating conditions. (see instructions)

23. Water Temperature, Percentile Report (Frequency of Occurrence)

In the table below, enter the temperature which is exceeded 10% of the year, 5% of the year, 1% of the year and not at all (maximum yearly temperature). (see instructions)

Frequency of occurrence

	10%	5%	1%	Maximum
a. Intake Water Temperature (Subject to natural changes) 223a	NA °F	°F	°F	°F
b. Discharge Water Temperature 223b	NA °F	°F	°F	°F

24. Water Intake Velocity (see instructions) 224 — NA feet/sec.

25. Retention Time Give the length of time, in minutes, from start of water temperature rise to discharge of cooling water. (see instructions) 225 — NA minutes

920980064

HUDSON

FORM APPROVED
OMB No. 158-R0100

DISCHARGE SERIAL NUMBER

364

FOR AGENCY USE

25. Additional Information

Item	Information
216	This effluent is river water used for once through cooling. Therefore, any parameters found in the discharge will also be found in the inlet or river water. No chemical additions are made to this cooling water
217a	A = Since monitoring of this discharge is not required by the existing N.P.D.E.S. permit, analyses were not performed and hence no data are available.
	B = Flow data are estimated.
	C = Temperature data are best estimates.
	D = Oil & Grease data are best estimates.
	E = Data given are best estimates for free residual chlorine. See disch. no. 361 for chlorination cycle data.

920980065

FORM APPROVED
OMB No. 158-R0100

STANDARD FORM C – MANUFACTURING AND COMMERCIAL

FOR AGENCY USE

SECTION II. BASIC DISCHARGE DESCRIPTION

Complete this section for each discharge indicated in Section I, Item 9, that is to surface waters. This includes discharges to municipal sewerage systems in which the wastewater does not go through a treatment works prior to being discharged to surface waters. Discharges to wells must be described where there are also discharges to surface waters from this facility. SEPARATE DESCRIPTIONS OF EACH DISCHARGE ARE REQUIRED EVEN IF SEVERAL DISCHARGES ORIGINATE IN THE SAME FACILITY. All values for an existing discharge should be representative of the twelve previous months of operation. If this is a proposed discharge, values should reflect best engineering estimates.

ADDITIONAL INSTRUCTIONS FOR SELECTED ITEMS APPEAR IN SEPARATE INSTRUCTION BOOKLET AS INDICATED. REFER TO BOOKLET BEFORE FILLING OUT THESE ITEMS.

1. Discharge Serial No. and Name

   a. Discharge Serial No. (see instructions) — 201a: 365

   b. Discharge Name Give name of discharge, if any. (see instructions) — 201b: No. 1 Unit Auxiliary Cooling Water

   c. Previous Discharge Serial No. If previous permit application was made for this discharge (see Item 4, Section I), provide previous discharge serial number. — 201c: 365

2. Discharge Operating Dates

   a. Discharge Began Date If the discharge described below is in operation, give the date (within best estimate) the discharge began. — 202a: 64 (YR) 12 (MO)

   b. Discharge to Begin Date If the discharge has never occurred but is planned for some future date, give the date (within best estimate) the discharge will begin. — 202b: NA (YR) (MO)

   c. Discharge to End Date If discharge is scheduled to be discontinued within the next 5 years, give the date (within best estimate) the discharge will end. — 202c: NA (YR) (MO)

3. Engineering Report Available Check if an engineering report is available to reviewing agency upon request. (see instructions) — 203: ☐

4. Discharge Location Name the political boundaries within which the point of discharge is located.

				Agency Use
State	204a	New Jersey	204d	
County	204b	Hudson	204e	
(If applicable) City or Town	204c	Jersey City	204f	

5. Discharge Point Description Discharge is into (check one): (see instructions) — 205a:

Stream (Includes ditches, arroyos, and other intermittent watercourses)	☒ STR
Lake	☐ LKE
Ocean	☐ OCE
Municipal Sanitary Wastewater Transport System	☐ MTS
Municipal Combined Sanitary and Storm Transport System	☐ MCS

920980066

DISCHARGE SERIAL NUMBER

365

HUDSON

FOR AGENCY USE

Municipal Storm Water Transport System ☐ STS

Well (injection) ☐ WEL

Other ☐ OTH

If 'other' is checked, specify

6. Discharge Point — Lat/Long Give the precise location of the point of discharge to the nearest second.

Latitude 40 DEG 44 MIN 51 SEC

Longitude 74 DEG 04 MIN 26 SEC

7. Discharge Receiving Water Name Name the waterway at the point of discharge.(see instructions)

Hackensack River

If the discharge is through an outfall that extends beyond the shoreline or is below the mean low water line, complete item 8.

For Agency Use				For Agency Use
Major	Minor	Sub		303e

8. Offshore Discharge

a. Discharge Distance from Shore NA feet

b. Discharge Depth Below Water Surface NA feet

9. Discharge Type and Occurrence

a. Type of Discharge Check whether the discharge is continuous or intermittent. (see instructions)

☒ (con) Continuous

☐ (int) Intermittent

b. Discharge Occurrence Days per Week Enter the average number of days per week (during periods of discharge) this discharge occurs.

7 days per week

c. Discharge Occurrence — Months If this discharge normally operates (either intermittently, or continuously) on less than a year-around basis (excluding shutdowns for routine maintenance), check the months during the year when the discharge is operating. (see instructions)

☐ JAN ☐ FEB ☐ MAR ☐ APR

☐ MAY ☐ JUN ☐ JUL ☐ AUG NA

☐ SEP ☐ OCT ☐ NOV ☐ DEC

Complete items 10 and 11 if "intermittent" is checked in item 9.a. Otherwise, proceed to item 12.

10. Intermittent Discharge Quantity State the average volume per discharge occurrence in thousands of gallons.

NA thousand gallons per discharge occurrence.

11. Intermittent Discharge Duration and Frequency

a. Intermittent Discharge Duration Per Day State the average number of hours per day the discharge is operating.

NA hours per day

b. Intermittent Discharge Frequency State the average number of discharge occurrences per day during days when discharging.

NA discharge occurrences per day

12. Maximum Flow Period Give the time period in which the maximum flow of this discharge occurs.

From 1 (month) to 12 (month)

EPA Form 7550-23 (7-73)

920980067

DISCHARGE SERIAL NUMBER

365

HUDSON

FORM APPROVED
OMB No. 158-R0100

FOR AGENCY USE

13. Activity Description Give a narrative description of activity producing this discharge.(see instructions)

213a Production of electricity using fossil fuel fired boilers producing high pressure steam driving turbine - generators.

14. Activity Causing Discharge For each SIC Code which describes the activity causing this discharge, supply the type and maximum amount of either the raw material consumed (item 14a) or the product produced (item 14b) in the units specified in Table I of the instruction Booklet. For SIC Codes not listed in Table I, use raw material or production units normally used for measuring production.(see instructions)

a. Raw Materials

214a	SIC Code (1)	Name (2)	Maximum Amount/Day (3)	Unit (See Table I) (4)	Shared Discharges (Serial Number) (5)
	NA				

b. Products

214b	SIC Code (1)	Name (2)	Maximum Amount/Day (3)	Unit (See Table I) (4)	Shared Discharges (Serial Number) (5)
	4931	Electricity	25,488	mwhrs.	NONE

920980068

DISCHARGE SERIAL NUMBER
365

HUDSON

FOR AGENCY USE

15. Waste Abatement

a. Waste Abatement Practices
Describe the waste abatement practices used on this discharge with a brief narrative. (see instructions)

215a

Narrative: NONE

b. Waste Abatement Codes
Using the codes listed in Table II of the instruction Booklet, describe the waste abatement processes for this discharge in the order in which they occur if possible.

215b

(1) NONONE. (2) _____. (3) _____.
(4) _____. (5) _____. (6) _____.
(7) _____. (8) _____. (9) _____.
(10) _____. (11) _____. (12) _____.
(13) _____. (14) _____. (15) _____.
(16) _____. (17) _____. (18) _____.
(19) _____. (20) _____. (21) _____.
(22) _____. (23) ?. (24) _____.
(25) _____.

920980069

DISCHARGE SERIAL NUMBER
365

FORM APPROVED
OMB No. 158-R0100

FOR AGENCY USE

16. Wastewater Characteristics (See Item 26)

Check the box beside each constituent which is present in the effluent (discharge water). This determination is to be based on actual analysis or best estimate.(see instructions)

Parameter B16	Present	Parameter B15	Present
Color 00080		Copper 01042	
Ammonia 00610		Iron 01045	
Organic nitrogen 00605		Lead 01051	
Nitrate 00620		Magnesium 00927	
Nitrite 00615		Manganese 01055	
Phosphorus 00665		Mercury 71900	
Sulfate 00945		Molybdenum 01062	
Sulfide 00745		Nickel 01067	
Sulfite 00740		Selenium 01147	
Bromide 71870		Silver 01077	
Chloride 00940		Potassium 00937	
Cyanide 00720		Sodium 00929	
Fluoride 00951		Thallium 01059	
Aluminum 01105		Titanium 01152	
Antimony 01097		Tin 01102	
Arsenic 01002		Zinc 01092	
Beryllium 01012		Algicides* 74051	
Barium 01007		Chlorinated organic compounds* 74052	
Boron 01022		Pesticides* 74053	
Cadmium 01027		Oil and grease 00550	X
Calcium 00916		Phenols 32730	
Cobalt 01037		Surfactants 38260	
Chromium 01034		Chlorine 50060	X
Fecal coliform bacteria 74055		Radioactivity* 74050	

*Specify substances, compounds and/or elements in Item 26.

Pesticides (insecticides, fungicides, and rodenticides) must be reported in terms of the acceptable common names specified in *Acceptable Common Names and Chemical Names for the Ingredient Statement on Pesticide Labels*, 2nd Edition, Environmental Protection Agency, Washington, D.C. 20250, June 1972, as required by Subsection 162.7(b) of the Regulations for the Enforcement of the Federal Insecticide, Fungicide, and Rodenticide Act.

920980070

DISCHARGE SERIAL NUMBER
365

HUDSON

FOR AGENCY USE

17. Description of Intake and Discharge

For each of the parameters listed below, enter in the appropriate box the value or code letter answer called for (see instructions)

In addition, enter the parameter name and code and all required values for any of the following parameters if they were checked in Item 16: ammonia, cyanide, aluminum, arsenic, beryllium, cadmium, chromium, copper, lead, mercury, nickel, selenium, zinc, phenols, oil and grease, and chlorine (residual).

Parameter and Code		Influent		Effluent					
		Untreated Intake Water (Daily Average) (1)	In-Plant Treated Intake Water (Daily Average) (2)	Daily Average (3)	Minimum Value Observed or Expected During Discharge Activity (4)	Maximum Value Observed or Expected During Discharge Activity (5)	Frequency of Analysis (6)	Number of Analyses (7)	Sample Type (8)
Flow* [illegible] 50050	B	NA	9.33	9.33	2.0	10.0	calc.	NA	NA
pH Units 00400	A	NA	NA	X	NA	NA	NA	NA	NA
Temperature (winter) °F 74028	C	NA	42	48	45	51	NA	NA	NA
Temperature (summer) °F 74027	C	NA	78	85	81	87	NA	NA	NA
Biochemical Oxygen Demand (BOD 5-day) mg/l 00310	A	NA	NA	NA	NA	NA	NA	NA	NA
Chemical Oxygen Demand (COD) mg/l 00340	A	NA	NA	NA	NA	NA	NA	NA	NA
Total Suspended (nonfilterable) Solids mg/l 00530	A	NA	NA	NA	NA	NA	NA	NA	NA
Specific Conductance micromhos/cm at 25° C 00095	A	NA	NA	X	NA	NA	NA	NA	NA
Settleable Matter (residue) ml/l 00545	A	NA	NA	NA	NA	NA	NA	NA	NA

*Other discharges sharing intake flow (serial numbers) (see instructions)

(See Item 26 for explanations of A, B & C)

920980071

FORM APPROVED
OMB No. 158-R0100

DISCHARGE SERIAL NUMBER
365

FOR AGENCY USE

17. (Cont'd.)

Parameter and Code	Influent		Effluent					
	Untreated Intake Water (Daily Average) (1)	In-Plant Treated Intake Water (Daily Average) (2)	Daily Average (3)	Minimum Value Observed or Expected During Discharge Activity (4)	Maximum Value Observed or Expected During Discharge Activity (5)	Frequency of Analysis (6)	Number of Analyses (7)	Sample Type (8)
Oil & Grease 00550 D	-	2.0	4.0	1.0	10.0	NA	NA	NA
Chlorine E	-	5	0.0	0.0	0.2	NA	NA	NA

18. Plant Controls Check if the following plant controls are available for this discharge.

Alternate power source for major pumping facility. 218 ☒ APS

Alarm or emergency procedure for power or equipment failure ☒ ALM

Complete Item 19 if discharge is from cooling and/or steam water generation and water treatment additives are used.

19. Water Treatment Additives If the discharge is treated with any conditioner, inhibitor, or algicide, answer the following:

a. Name of Material(s) 219a Chlorine

b. Name and address of manufacturer 219b Linden Chlorine Products
P.O. Box 484
Linden, N.J. 07036

c. Quantity (pounds added per million gallons of water treated). 219c 40

920980072

HUDSON
FOR AGENCY USE

c. Chemical composition of these additives (see instructions). 219d — Cl2

Complete items 20-25 if there is a thermal discharge (e.g., associated with a steam and/or power generation plant, steel mill, petroleum refinery, or any other manufacturing process) and the total discharge flow is 10 million gallons per day or more. (see instructions)

20. Thermal Discharge Source Check the appropriate item(s) indicating the source of the discharge. (see instructions) — 220

NA

- ☐ Boiler Blowdown — ☐ BLBD
- ☐ Boiler Chemical Cleaning — ☐ BCCL
- ☐ Ash Pond Overflow — ☐ APOF
- ☐ Boiler Water Treatment — Evaporator Blowdown — ☐ EPBD
- ☐ Oil or Coal Fired Plants — Effluent from Air Pollution Control Devices — ☐ OCFP
- ☐ Condense Cooling Water — ☐ COND
- ☐ Cooling Tower Blowdown — ☐ CTBD
- ☐ Manufacturing Process — ☐ MFPR
- ☐ Other — ☐ OTHR

21. Discharge/Receiving Water Temperature Difference

Give the maximum temperature difference between the discharge and receiving waters for summer and winter operating conditions. (see instructions)

- Summer — 221a — NA °F.
- Winter — 221b — NA °F.

22. Discharge Temperature, Rate of Change Per Hour — 222 — NA °F./hour

Give the maximum possible rate of temperature change per hour of discharge under operating conditions. (see instructions)

23. Water Temperature, Percentile Report (Frequency of Occurrence)

In the table below, enter the temperature which is exceeded 10% of the year, 5% of the year, 1% of the year and not at all (maximum yearly temperature). (see instructions)

Frequency of occurrence

	10%	5%	1%	Maximum
a. Intake Water Temperature (Subject to natural changes) — 223a	NA °F	°F	°F	°F
b. Discharge Water Temperature — 223b	NA °F	°F	°F	°F

24. Water Intake Velocity (see instructions) — 224 — NA feet/sec.

25. Retention Time Give the length of time, in minutes, from start of water temperature rise to discharge of cooling water. (see instructions) — 225 — NA minutes

920980073

FORM APPROVED
OMB No. 158-R0100

DISCHARGE SERIAL NUMBER

365

FOR AGENCY USE

28. Additional Information

Item	Information
216	This effluent is river water used for once through cooling. Therefore any parameters found in the discharge will also be found in the inlet or river water. No chemical additions are made to this cooling water, other than chlorine.
217a	A = Since monitoring of this discharge is not required by the existing N.P.D.E.S. permit, analyses were not performed and hence no data are available.
	B = Flow data are estimated.
	C = Temperature data are best estimates.
	D = Oil & Grease data are best estimates.
	E = Data given are best estimates for free residual chlorine. Se Discharge no. 361 for chlorination cycle data.

920980074

FORM APPROVED
OMB No. 158-R0100

STANDARD FORM C — MANUFACTURING AND COMMERCIAL

FOR AGENCY USE

SECTION II. BASIC DISCHARGE DESCRIPTION

Complete this section for each discharge indicated in Section I, Item 9, that is to surface waters. This includes discharges to municipal sewerage systems in which the wastewater does not go through a treatment works prior to being discharged to surface waters. Discharges to wells must be described where there are also discharges to surface waters from this facility. SEPARATE DESCRIPTIONS OF EACH DISCHARGE ARE REQUIRED EVEN IF SEVERAL DISCHARGES ORIGINATE IN THE SAME FACILITY. All values for an existing discharge should be representative of the twelve previous months of operation. If this is a proposed discharge, values should reflect best engineering estimates.

ADDITIONAL INSTRUCTIONS FOR SELECTED ITEMS APPEAR IN SEPARATE INSTRUCTION BOOKLET AS INDICATED. REFER TO BOOKLET BEFORE FILLING OUT THESE ITEMS.

1. Discharge Serial No. and Name

a. Discharge Serial No. (see instructions)	201a	366
b. Discharge Name Give name of discharge, if any. (see instructions)	201b	#2 Unit Auxiliary Cooling Water
c. Previous Discharge Serial No. If previous permit application was made for this discharge (see item 4, Section I), provide previous discharge serial number.	201c	366

2. Discharge Operating Dates

a. Discharge Began Date If the discharge described below is in operation, give the date (within best estimate) the discharge began.	202a	64 (YR) 12 (MO)
b. Discharge to Begin Date If the discharge has never occurred but is planned for some future date, give the date (within best estimate) the discharge will begin.	202b	NA (YR) (MO)
c. Discharge to End Date If discharge is scheduled to be discontinued within the next 5 years, give the date (within best estimate) the discharge will end.	202c	NA (YR) (MO)

3. Engineering Report Available
Check if an engineering report is available to reviewing agency upon request. (see instructions) 203 ☐

4. Discharge Location Name the political boundaries within which the point of discharge is located.

			Agency Use
State	204a	New Jersey	204d
County	204b	Hudson	204e
(If applicable) City or Town	204c	Jersey City	204f

5. Discharge Point Description
Discharge is into (check one); (see instructions)

Stream (includes ditches, arroyos, and other intermittent watercourses)	205a	☒ STR
Lake		☐ LKE
Ocean		☐ OCE
Municipal Sanitary Wastewater Transport System		☐ MTS
Municipal Combined Sanitary and Storm Transport System		☐ MCS

920980075

DISCHARGE SERIAL NUMBER

366

HUDSON

FOR AGENCY USE

Municipal Storm Water Transport System ☐ STS

Well (Injection) ☐ WEL

Other ☐ OTH

If "other" is checked, specify 208a

6. Discharge Point — Lat/Long Give the precise location of the point of discharge to the nearest second.

Latitude 206a: 40 DEG 44 MIN 50 SEC

Longitude 206b: 74 DEG 04 MIN 26 SEC

7. Discharge Receiving Water Name Name the waterway at the point of discharge.(see instructions) 207a: Hackensack River

If the discharge is through an outfall that extends beyond the shoreline or is below the mean low water line, complete item 8.

For Agency Use				For Agency Use
Major	Minor	Sub	207b	303a

8. Offshore Discharge

a. Discharge Distance from Shore 203a: NA feet

b. Discharge Depth Below Water Surface 206b: NA feet

9. Discharge Type and Occurrence

a. Type of Discharge Check whether the discharge is continuous or intermittent. (see instructions) 209a: ☒ (con) Continuous ☐ (int) Intermittent

b. Discharge Occurrence Days per Week Enter the average number of days per week (during periods of discharge) this discharge occurs. 209b: 7 days per week

c. Discharge Occurrence —Months If this discharge normally operates (either intermittently, or continuously) on less than a year-around basis (excluding shutdowns for routine maintenance), check the months during the year when the discharge is operating. (see instructions) 209c: ☐ JAN ☐ FEB ☐ MAR ☐ APR ☐ MAY ☐ JUN ☐ JUL ☐ AUG ☐ SEP ☐ OCT ☐ NOV ☐ DEC NA

Complete items 10 and 11 if "intermittent" is checked in item 9.a. Otherwise, proceed to item 12.

10. Intermittent Discharge Quantity State the average volume per discharge occurrence in thousands of gallons. 210: NA thousand gallons per discharge occurrence.

11. Intermittent Discharge Duration and Frequency

a. Intermittent Discharge Duration Per Day State the average number of hours per day the discharge is operating. 211a: NA hours per day

b. Intermittent Discharge Frequency State the average number of discharge occurrences per day during days when discharging. 211b: NA discharge occurrences per day

12. Maximum Flow Period Give the time period in which the maximum flow of this discharge occurs. 212: From 1 (month) to 12 (month)

EPA Form 7550-23 (7-77)

920980076

DISCHARGE SERIAL NUMBER

366

HUDSON
FORM APPROVED
OMB No. 158-R0100

FOR AGENCY USE

13. Activity Description Give a narrative description of activity producing this discharge.(see instructions)

213a | Production of electricity using fosil fuel fired boilers producing high pressure steam driving turbine - generators.

14. Activity Causing Discharge For each SIC Code which describes the activity causing this discharge, supply the type and maximum amount of either the raw material consumed (item 14a) or the product produced (item 14b) in the units specified in Table I of the instruction Booklet. For SIC Codes not listed in Table I, use raw material or production units normally used for measuring production.(see instructions)

a. Raw Materials

214a	SIC Code (1)	Name (2)	Maximum Amount/Day (3)	Unit (See Table I) (4)	Shared Discharges (Serial Number) (5)
	NA				

b. Products

214b	SIC Code (1)	Name (2)	Maximum Amount/Day (3)	Unit (See Table I) (4)	Shared Discharges (Serial Number) (5)
	4931	Electricity	25,488	mwhrs	NONE

920980077

DISCHARGE SERIAL NUMBER

366

HUDSON

FOR AGENCY USE

15. Waste Abatement

a. Waste Abatement Practices
Describe the waste abatement practices used on this discharge with a brief narrative. (See instructions)

215a

Narrative: NONE

b. Waste Abatement Codes
Using the codes listed in Table II of the Instruction Booklet, describe the waste abatement processes for this discharge in the order in which they occur if possible.

215b

(1) NONONE. (2) _____. (3) _____.

(4) _____. (5) _____. (6) _____.

(7) _____. (8) _____. (9) _____.

(10) _____. (11) _____. (12) _____.

(13) _____. (14) _____. (15) _____.

(16) _____. (17) _____. (18) _____.

(19) _____. (20) _____. (21) _____.

(22) _____. (23) ?. (24) _____.

(25) _____.

920980078

HUDSON

FORM APPROVED
OMB No. 158-R0100

DISCHARGE SERIAL NUMBER

366

FOR AGENCY USE

16. Wastewater Characteristics (See Item 26)

Check the box beside each constituent which is present in the effluent (discharge water). This determination is to be based on actual analysis or best estimate.(see instructions)

Parameter B16	Present	Parameter B16	Present
Color 00080		Copper 01042	
Ammonia 00610		Iron 01045	
Organic nitrogen 00605		Lead 01051	
Nitrate 00620		Magnesium 00927	
Nitrite 00615		Manganese 01055	
Phosphorus 00665		Mercury 71900	
Sulfate 00945		Molybdenum 01062	
Sulfide 00745		Nickel 01067	
Sulfite 00740		Selenium 01147	
Bromide 71870		Silver 01077	
Chloride 00940		Potassium 00937	
Cyanide 00720		Sodium 00929	
Fluoride 00951		Thallium 01059	
Aluminum 01105		Titanium 01152	
Antimony 01097		Tin 01102	
Arsenic 01002		Zinc 01092	
Beryllium 01012		Algicides* 74051	
Barium 01007		Chlorinated organic compounds* 74052	
Boron 01022		Pesticides* 74053	
Cadmium 01027		Oil and grease 00550	X
Calcium 00916		Phenols 32730	
Cobalt 01037		Surfactants 38260	
Chromium 01034		Chlorine 50060	X
Fecal coliform bacteria 74055		Radioactivity* 74050	

*Specify substances, compounds and/or elements in Item 26.

Pesticides (insecticides, fungicides, and rodenticides) must be reported in terms of the acceptable common names specified in *Acceptable Common Names and Chemical Names for the Ingredient Statement on Pesticide Labels*, 2nd Edition, Environmental Protection Agency, Washington, D.C. 20250, June 1972, as required by Subsection 162.7(b) of the Regulations for the Enforcement of the Federal Insecticide, Fungicide, and Rodenticide Act.

920980079

DISCHARGE SERIAL NUMBER

366

HUDSON

FOR AGENCY USE

17. Description of Intake and Discharge

For each of the parameters listed below, enter in the appropriate box the value or code letter answer called for (see instructions)

In addition, enter the parameter name and code and all required values for any of the following parameters if they were checked in Item 16; ammonia, cyanide, aluminum, arsenic, beryllium, cadmium, chromium, copper, lead, mercury, nickel, selenium, zinc, phenols, oil and grease, and chlorine (residual).

Parameter and Code		Influent		Effluent					
		Untreated Intake Water (Daily Average) (1)	In-Plant Treated Intake Water (Daily Average) (2)	Daily Average (3)	Minimum Value Observed or Expected During Discharge Activity (4)	Maximum Value Observed or Expected During Discharge Activity (5)	Frequency of Analysis (6)	Number of Analyses (7)	Sample Type (8)
Flow* 50050	E	NA	.54	.54	.01	.70	calc	NA	NA
pH Units 00400	B	NA	6.9	X	6.4	7.9	NA	NA	NA
Temperature (winter) °F 74028	D	NA	42	48	45	51	NA	NA	NA
Temperature (summer) °F 74027	D	NA	78	85	81	87	NA	NA	NA
Biochemical Oxygen Demand (BOD 5-day) mg/l 00310	A	NA	NA	NA	NA	NA	NA	NA	NA
Chemical Oxygen Demand (COD) mg/l 00340	A	NA	NA	NA	NA	NA	NA	NA	NA
Total Suspended (nonfilterable) Solids mg/l 00530 (NET)	C	NA	27	1	0	9	1/30	12	# 24
Specific Conductance micromho/cm at 25° C 00095	A	NA	NA	X	NA	NA	NA	NA	NA
Settleable Matter (residue) ml/l 00545	A	NA	NA	NA	NA	NA	NA	NA	NA

*Other discharges during intake flow (serial numbers) (see instructions)

(See item 26 for explanation of A, B, C, D, E & F)

920980080

FORM APPROVED
OMB No. 158-R0100

DISCHARGE SERIAL NUMBER
366

FOR AGENCY USE

17. (Cont'd.)

Parameter and Code	Influent		Effluent					
	Untreated Intake Water (Daily Average) (1)	In-Plant Treated Intake Water (Daily Average) (2)	Daily Average (3)	Minimum Value Observed or Expected During Discharge Activity (4)	Maximum Value Observed or Expected During Discharge Activity (5)	Frequency of Analysis (6)	Number of Analyses (7)	Sample Type (8)
Oil & Grease 00550 A	-	NA	NA	NA	NA	NA	NA	NA
Chlorine F	-	5	0.0	0.0	0.2	NA	NA	NA

18. Plant Controls Check if the following plant controls are available for this discharge.

Alternate power source for major pumping facility. 218 ☒ APS

Alarm or emergency procedure for power or equipment failure ☒ ALM

Complete Item 19 if discharge is from cooling and/or steam water generation and water treatment additives are used.

19. Water Treatment Additives If the discharge is treated with any conditioner, inhibitor, or algicide, answer the following:

a. Name of Material(s) 219a Chlorine

b. Name and address of manufacturer 219b Linden Chlorine Products
P.O. Box 484
Linden, N.J. 07036

c. Quantity (pounds added per million gallons of water treated). 219c 40

920980081

DISCHARGE SERIAL NUMBER
366

HUDSON
FOR AGENCY USE

d. Chemical composition of these additives (see instructions). 219d — Cl_2

Complete items 20-25 if there is a thermal discharge (e.g., associated with a steam and/or power generation plant, steel mill, petroleum refinery, or any other manufacturing process) and the total discharge flow is 10 million gallons per day or more. (see instructions)

20. Thermal Discharge Source Check the appropriate item(s) indicating the source of the discharge. (see instructions) — 220 — NA

- ☐ Boiler Blowdown — BLBD
- ☐ Boiler Chemical Cleaning — BCCL
- ☐ Ash Pond Overflow — APOF
- ☐ Boiler Water Treatment — Evaporator Blowdown — EPBD
- ☐ Oil or Coal Fired Plants — Effluent from Air Pollution Control Devices — OCFP
- ☐ Condense Cooling Water — COND
- ☐ Cooling Tower Blowdown — CTBD
- ☐ Manufacturing Process — MFPR
- ☐ Other — OTHR

21. Discharge/Receiving Water Temperature Difference

Give the maximum temperature difference between the discharge and receiving waters for summer and winter operating conditions. (see instructions)

- Summer — 221a — NA °F.
- Winter — 221b — NA °F.

22. Discharge Temperature, Rate of Change Per Hour — 222 — NA °F./hour

Give the maximum possible rate of temperature change per hour of discharge under operating conditions. (see instructions)

23. Water Temperature, Percentile Report (Frequency of Occurrence)

In the table below, enter the temperature which is exceeded 10% of the year, 5% of the year, 1% of the year and not at all (maximum yearly temperature). (see instructions)

Frequency of occurrence	10%	5%	1%	Maximum
a. Intake Water Temperature (Subject to natural changes) — 223a	NA °F	°F	°F	°F
b. Discharge Water Temperature — 223b	NA °F	°F	°F	°F

24. Water Intake Velocity (see instructions) — 224 — NA feet/sec.

25. Retention Time Give the length of time, in minutes, from start of water temperature rise to discharge of cooling water. (see instructions) — 225 — NA minutes

920980082

HUDSON
FORM APPROVED
OMB No. 158-R0100

DISCHARGE SERIAL NUMBER

366

FOR AGENCY USE

28. Additional Information

Item	Information
216	This effluent is river water used for once through cooling. Therefore any parameters found in the discharge will also be found in the inlet or river water. No chemical additions are made to this cooling water, other than chlorine.
217a	A = Since these analyses were not required by the existing N.P.D.E.S. permit, they were not performed and hence no data are available.
	B = The data given for pH is the same as that given for Discharge No. 361, since this discharge is the same as No. 361 in function.
	C = The data for TSS is a summary of the analyses taken over the past 12 months. Since this discharge is river water that is returned to its source, effluent data for TSS concentrations are given on a NET basis.
	D = Temperature data are best estimates.
	E = Flow data are estimated.
	F = Data given are best estimates for free residual chlorine only.
219c	See Discharge No. 361 for chlorination schedule.

920980083

STANDARD FORM C — MANUFACTURING AND COMMERCIAL

FOR AGENCY USE

SECTION II. BASIC DISCHARGE DESCRIPTION

Complete this section for each discharge indicated in Section I, item 8, that is to surface waters. This includes discharges to municipal sewerage systems in which the wastewater does not go through a treatment works prior to being discharged to surface waters. Discharges to wells must be described where there are also discharges to surface waters from this facility. SEPARATE DESCRIPTIONS OF EACH DISCHARGE ARE REQUIRED EVEN IF SEVERAL DISCHARGES ORIGINATE IN THE SAME FACILITY. All values for an existing discharge should be representative of the twelve previous months of operation. If this is a proposed discharge, values should reflect best engineering estimates.

ADDITIONAL INSTRUCTIONS FOR SELECTED ITEMS APPEAR IN SEPARATE INSTRUCTION BOOKLET AS INDICATED. REFER TO BOOKLET BEFORE FILLING OUT THESE ITEMS.

1. Discharge Serial No. and Name		
a. Discharge Serial No. (see instructions)	201a	367
b. Discharge Name Give name of discharge, if any. (see instructions)	201b	Nos. 51 & 52 Boilers Fan & Air Heater bearing cooling water
c. Previous Discharge Serial No. If previous permit application was made for this discharge (see item 4, Section I), provide previous discharge serial number.	201c	422
2. Discharge Operating Dates		
a. Discharge Began Date If the discharge described below is in operation, give the date (within best estimate) the discharge began.	202a	41 7 (YR MO)
b. Discharge to Begin Date If the discharge has never occurred but is planned for some future date, give the date (within best estimate) the discharge will begin.	202b	NA (YR MO)
c. Discharge to End Date If discharge is scheduled to be discontinued within the next 5 years, give the date (within best estimate) the discharge will end.	202c	81 11 (YR MO)
3. Engineering Report Available Check if an engineering report is available to reviewing agency upon request. (see instructions)	203	☐
4. Discharge Location Name the political boundaries within which the point of discharge is located.		Agency Use
State	204a	New Jersey (204e)
County	204b	Hudson (204d)
(If applicable) City or Town	204c	Jersey City (204f)
5. Discharge Point Description Discharge is into (check one): (see instructions)		
Stream (includes ditches, arroyos, and other intermittent watercourses)	205a	☒ STR
Lake		☐ LKE
Ocean		☐ OCE
Municipal Sanitary Wastewater Transport System		☐ MTS
Municipal Combined Sanitary and Storm Transport System		☐ MCS

920980084

HUDSON

FOR AGENCY USE

Municipal Storm Water Transport System — ☐ STS

Well (injection) — ☐ WEL

Other — ☐ OTH

If 'other' is checked, specify — NA

6. Discharge Point — Lat/Long Give the precise location of the point of discharge to the nearest second.

Latitude — 40 DEG 44 MIN 45 SEC

Longitude — 74 DEG 04 MIN 28 SEC

7. Discharge Receiving Water Name Name the waterway at the point of discharge.(see instructions)

Hackensack River

If the discharge is through an outfall that extends beyond the shoreline or is below the mean low water line, complete item 8.

For Agency Use				For Agency Use
Major	Minor	Sub		303e

8. Offshore Discharge

a. Discharge Distance from Shore — NA feet

b. Discharge Depth Below Water Surface — NA feet

9. Discharge Type and Occurrence

a. Type of Discharge Check whether the discharge is continuous or intermittent. (see instructions)

☒ (con) Continuous

☐ (int) Intermittent

b. Discharge Occurrence Days per Week Enter the average number of days per week (during periods of discharge) this discharge occurs.

7 days per week

c. Discharge Occurrence —Months If this discharge normally operates (either intermittently, or continuously) on less than a year-around basis (excluding shutdowns for routine maintenance), check the months during the year when the discharge is operating. (see instructions)

☐ JAN ☐ FEB ☐ MAR ☐ APR

☐ MAY ☐ JUN ☐ JUL ☐ AUG NA

☐ SEP ☐ OCT ☐ NOV ☐ DEC

Complete items 10 and 11 if "intermittent" is checked in item 9.a. Otherwise, proceed to item 12.

10. Intermittent Discharge Quantity State the average volume per discharge occurrence in thousands of gallons.

NA thousand gallons per discharge occurrence.

11. Intermittent Discharge Duration and Frequency

a. Intermittent Discharge Duration Per Day State the average number of hours per day the discharge is operating.

NA hours per day

b. Intermittent Discharge Frequency State the average number of discharge occurrences per day during days when discharging.

NA discharge occurrences per day

12. Maximum Flow Period Give the time period in which the maximum flow of this discharge occurs.

From 1 (month) to 12 (month)

920980085

DISCHARGE SERIAL NUMBER

367

ROBSON

FORM APPROVED
OMB No. 158-R0100

FOR AGENCY USE

13. Activity Description Give a narrative description of activity producing this discharge.(see instructions)

213a | Production of steam for auxiliary equipment, using a fuel oil-fired boiler.

14. Activity Causing Discharge For each SIC Code which describes the activity causing this discharge, supply the type and maximum amount of either the raw material consumed (item 14a) or the product produced (item 14b) in the units specified in Table I of the instruction Booklet. For SIC Codes not listed in Table I, use raw material or production units normally used for measuring production.(see instructions)

a. Raw Materials

214a	SIC Code (1)	Name (2)	Maximum Amount/Day (3)	Unit (See Table I) (4)	Shared Discharges (Serial Number) (5)
	NA				

b. Products

214b	SIC Code (1)	*Name (2)	Maximum Amount/Day (3)	Unit (See Table I) (4)	Shared Discharges (Serial Number) (5)
	4961	Auxiliary Steam	2.64	7-2	369

920980086

DISCHARGE SERIAL NUMBER
367

HUDSON

FOR AGENCY USE

15. Waste Abatement

a. Waste Abatement Practices Describe the waste abatement practices used on this discharge with a brief narrative. (see instructions)

215a

Narrative: None. This discharge is river water pumped through equipment coolers and returned to the river.

b. Waste Abatement Codes Using the codes listed in Table II of the Instruction Booklet, describe the waste abatement processes for this discharge in the order in which they occur if possible.

215b

(1) NA. (2) _____. (3) _____.
(4) _____. (5) _____. (6) _____.
(7) _____. (8) _____. (9) _____.
(10) _____. (11) _____. (12) _____.
(13) _____. (14) _____. (15) _____.
(16) _____. (17) _____. (18) _____.
(19) _____. (20) _____. (21) _____.
(22) _____. (23) _____. (24) _____.
(25) _____.

920980087

FORM APPROVED
OMB No. 158-R0100

FOR AGENCY USE

16. Wastewater Characteristics (See Item No. 26)

Check the box beside each constituent which is present in the effluent (discharge water). This determination is to be based on actual analysis or best estimate (see instructions)

Parameter #16	Present	Parameter #16	Present
Color 00080		Copper 01042	
Ammonia 00610		Iron 01045	
Organic nitrogen 00605		Lead 01051	
Nitrate 00620		Magnesium 00927	
Nitrite 00615		Manganese 01055	
Phosphorus 00665		Mercury 71900	
Sulfate 00945		Molybdenum 01062	
Sulfide 00745		Nickel 01067	
Sulfite 00740		Selenium 01147	
Bromide 71870		Silver 01077	
Chloride 00940		Potassium 00937	
Cyanide 00720		Sodium 00929	
Fluoride 00951		Thallium 01059	
Aluminum 01105		Titanium 01152	
Antimony 01097		Tin 01102	
Arsenic 01002		Zinc 01092	
Beryllium 01012		Algicides* 74051	
Barium 01007		Chlorinated organic compounds* 74052	
Boron 01022		Pesticides* 74053	
Cadmium 01027		Oil and grease 00550	
Calcium 00916		Phenols 32730	
Cobalt 01037		Surfactants 38260	
Chromium 01034		Chlorine 50060	
Fecal coliform bacteria 74055		Radioactivity* 74050	

*Specify substances, compounds and/or elements in Item 26.

Pesticides (insecticides, fungicides, and rodenticides) must be reported in terms of the acceptable common names specified in *Acceptable Common Names and Chemical Names for the Ingredient Statement on Pesticide Labels*, 2nd Edition, Environmental Protection Agency, Washington, D.C. 20250, June 1972, as required by Subsection 162.7(b) of the Regulations for the Enforcement of the Federal Insecticide, Fungicide, and Rodenticide Act.

920980088

DISCHARGE SERIAL NUMBER
367

HUDSON
FOR AGENCY USE

17. Description of Intake and Discharge

For each of the parameters listed below, enter in the appropriate box the value or code letter answer called for.(see instructions)

In addition, enter the parameter name and code and all required values for any of the following parameters if they were checked in Item 16; ammonia, cyanide, aluminum, arsenic, beryllium, cadmium, chromium, copper, lead, mercury, nickel, selenium, zinc, phenols, oil and grease, and chlorine (residual).

Parameter and Code [217a]		Influent		Effluent					
		Untreated Intake Water (Daily Average) (1)	In-Plant Treated Intake Water (Daily Average) (2)	Daily Average (3)	Minimum Value Observed or Expected During Discharge Activity (4)	Maximum Value Observed or Expected During Discharge Activity (5)	(F) Frequency of Analysis (6)	(F) Number of Analyses (7)	(F) Sample Type (8)
Flow* Gallons per day 00056	(A)	180,000	NA	180,000	0	180,000	2/30	24	NA
pH Units 00400	(B)	7.1	NA	X	6.5	7.8	NA	NA	NA
Temperature (winter) °F 74028	(C)	39	NA	49	41	60	NA	NA	NA
Temperature (summer) °F 74027	(C)	85	NA	95	87	106	NA	NA	NA
Biochemical Oxygen Demand (BOD 5-day) mg/l 00310	(D)	NA	NA	NA	NA	NA	NA	NA	NA
Chemical Oxygen Demand (COD) mg/l 00340	(D)	NA	NA	NA	NA	NA	NA	NA	NA
Total Suspended (nonfilterable) Solids mg/l 00530	(E)	23	NA	18	1	68	2/30	20	24
Specific Conductance micromhos/cm at 25° C 00095	(D)	NA	NA	X	NA	NA	NA	NA	NA
Settleable Matter (residue) ml/l 00545	(D)	NA	NA	NA	NA	NA	NA	NA	NA

*Other discharges sharing intake flow (serial numbers).(see instructions)

(See Item 26 for explanation of A, B, C, D & E)

920980089

17. (Cont'd.)

Parameter and Code 217a	Influent		Effluent					
	Untreated Intake Water (Daily Average) (1)	In-Plant Treated Intake Water (Daily Average) (2)	Daily Average (3)	Minimum Value Observed or Expected During Discharge Activity (4)	Maximum Value Observed or Expected During Discharge Activity (5)	Frequency of Analysis (6)	Number of Analyses (7)	Sample Type (8)
NA								

18. Plant Controls Check if the following plant controls are available for this discharge.

Alternate power source for major pumping facility. ☐ APS

Alarm or emergency procedure for power or equipment failure ☐ ALM

Complete item 19 if discharge is from cooling and/or steam water generation and water treatment additives are used.

19. Water Treatment Additives If the discharge is treated with any conditioner, inhibitor, or algicide, answer the following:

a. Name of Material(s) 219a NA

b. Name and address of manufacturer 219b

c. Quantity (pounds added per million gallons of water treated). 219c NA

920980090

HUDSON

DISCHARGE SERIAL NUMBER
367

FOR AGENCY USE

d. Chemical composition of these additives (see instructions). 219d

Complete items 20-25 if there is a thermal discharge (e.g., associated with a steam and/or power generation plant, steel mill, petroleum refinery, or any other manufacturing process) and the total discharge flow is 10 million gallons per day or more. (see instructions)

20. Thermal Discharge Source Check the appropriate item(s) indicating the source of the discharge. (see instructions) 220

NA

- ☐ Boiler Blowdown — BLBD
- ☐ Boiler Chemical Cleaning — BCCL
- ☐ Ash Pond Overflow — APOF
- ☐ Boiler Water Treatment — Evaporator Blowdown — EPBD
- ☐ Oil or Coal Fired Plants — Effluent from Air Pollution Control Devices — OCFP
- ☐ Condense Cooling Water — COND
- ☐ Cooling Tower Blowdown — CTBD
- ☐ Manufacturing Process — MFPR
- ☐ Other — OTHR

21. Discharge/Receiving Water Temperature Difference

Give the maximum temperature difference between the discharge and receiving waters for summer and winter operating conditions. (see instructions)

- Summer 221a: NA °F.
- Winter 221b: NA °F.

22. Discharge Temperature, Rate of Change Per Hour 222

Give the maximum possible rate of temperature change per hour of discharge under operating conditions. (see instructions)

NA °F./hour

23. Water Temperature, Percentile Report (Frequency of Occurrence)

In the table below, enter the temperature which is exceeded 10% of the year, 5% of the year, 1% of the year and not at all (maximum yearly temperature). (see instructions)

Frequency of occurrence	10%	5%	1%	Maximum
a. Intake Water Temperature (Subject to natural changes) 223a	NA °F	°F	°F	°F
b. Discharge Water Temperature 223b	°F	°F	°F	°F

24. Water Intake Velocity (see instructions) 224: NA feet/sec.

25. Retention Time Give the length of time, in minutes, from start of water temperature rise to discharge of cooling water. (see instructions) 225: NA minutes

920980091

FORM APPROVED
OMB No. 158-R0100

DISCHARGE SERIAL NUMBER

367

FOR AGENCY USE

22. Additional Information

Item	Information
216	This effluent is river water used for once through cooling. Therefore any parameters found in the discharge will also be found in the inlet or river water. No chemical additions are made to this cooling water.
217a	A = Flow figure is based on the average of monthly determinations. B = Values taken from inlet river water data. C = Estimated data. D = No data available. Analyses not previously required, therefore not performed. E = The effluent data given are on a gross basis. For any data required on any future permits, the data should be requested on a NET basis. F = All monitoring and analyses required of this discharge will also be applied to the inlet river water, so that all monitoring reports will be submitted showing NET discharge data.

920980092

FORM APPROVED
OMB No. 158-R0100

STANDARD FORM C — MANUFACTURING AND COMMERCIAL

FOR AGENCY USE

SECTION II. BASIC DISCHARGE DESCRIPTION

Complete this section for each discharge indicated in Section I, item 9, that is to surface waters. This includes discharges to municipal sewerage systems in which the wastewater does not go through a treatment works prior to being discharged to surface waters. Discharges to wells must be described where there are also discharges to surface waters from this facility. SEPARATE DESCRIPTIONS OF EACH DISCHARGE ARE REQUIRED EVEN IF SEVERAL DISCHARGES ORIGINATE IN THE SAME FACILITY. All values for an existing discharge should be representative of the twelve previous months of operation. If this is a proposed discharge, values should reflect best engineering estimates.

ADDITIONAL INSTRUCTIONS FOR SELECTED ITEMS APPEAR IN SEPARATE INSTRUCTION BOOKLET AS INDICATED. REFER TO BOOKLET BEFORE FILLING OUT THESE ITEMS.

1. Discharge Serial No. and Name		
a. Discharge Serial No. (see instructions)	201a	368
b. Discharge Name Give name of discharge, if any. (see instructions)	201b	Miscellaneous equipment cooling water
c. Previous Discharge Serial No. If previous permit application was made for this discharge (see item 4, Section I), provide previous discharge serial number.	201c	NA
2. Discharge Operating Dates		
a. Discharge Began Date If the discharge described below is in operation, give the date (within best estimate) the discharge began.	202a	41 7 (YR MO)
b. Discharge to Begin Date If the discharge has never occurred but is planned for some future date, give the date (within best estimate) the discharge will begin.	202b	NA (YR MO)
c. Discharge to End Date If discharge is scheduled to be discontinued within the next 5 years, give the date (within best estimate) the discharge will end.	202c	81 11 (YR MO)
3. Engineering Report Available Check if an engineering report is available to reviewing agency upon request. (see instructions)	203	☐
4. Discharge Location Name the political boundaries within which the point of discharge is located.		Agency Use
State	204a	New Jersey — 204d
County	204b	Hudson — 204e
(If applicable) City or Town	204c	Jersey City — 204f
5. Discharge Point Description Discharge is into (check one): (see instructions)		
Stream (includes ditches, arroyos, and other intermittent watercourses)	205a	☒ STR
Lake		☐ LKE
Ocean		☐ OCE
Municipal Sanitary Wastewater Transport System		☐ MTS
Municipal Combined Sanitary and Storm Transport System		☐ MCS

920980093

DISCHARGE SERIAL NUMBER

368

HUDSON

FOR AGENCY USE

Municipal Storm Water Transport System ☐ STS

Well (injection) ☐ WEL

Other ☐ OTH

If "other" is checked, specify 206b NA

6. Discharge Point — Lat/Long Give the precise location of the point of discharge to the nearest second.

Latitude 206a 40 DEG 44 MIN 43 SEC

Longitude 206b 74 DEG 04 MIN 29 SEC

7. Discharge Receiving Water Name Name the waterway at the point of discharge.(see instructions) 207a Hackensack River

If the discharge is through an outfall that extends beyond the shoreline or is below the mean low water line, complete item 8.

For Agency Use				For Agency Use
Major	Minor	Sub	207c	303e
207b				

8. Offshore Discharge

a. Discharge Distance from Shore 208a NA feet

b. Discharge Depth Below Water Surface 208b NA feet

9. Discharge Type and Occurrence

a. Type of Discharge Check whether the discharge is continuous or intermittent. (see instructions) 209a ☒ (con) Continuous ☐ (int) Intermittent

b. Discharge Occurrence Days per Week Enter the average number of days per week (during periods of discharge) this discharge occurs. 209b 7 days per week

c. Discharge Occurrence — Months If this discharge normally operates (either intermittently, or continuously) on less than a year-around basis (excluding shutdowns for routine maintenance), check the months during the year when the discharge is operating. (see instructions) 209c ☐ JAN ☐ FEB ☐ MAR ☐ APR ☐ MAY ☐ JUN ☐ JUL ☐ AUG ☐ SEP ☐ OCT ☐ NOV ☐ DEC NA

Complete items 10 and 11 if "intermittent" is checked in item 9.a. Otherwise, proceed to item 12.

10. Intermittent Discharge Quantity State the average volume per discharge occurrence in thousands of gallons. 210 NA thousand gallons per discharge occurrence.

11. Intermittent Discharge Duration and Frequency

a. Intermittent Discharge Duration Per Day State the average number of hours per day the discharge is operating. 211a NA hours per day

b. Intermittent Discharge Frequency State the average number of discharge occurrences per day during days when discharging. 211b NA discharge occurrences per day

12. Maximum Flow Period Give the time period in which the maximum flow of this discharge occurs. 212 From 1 month to 12 month

920980094

HUDSON

FORM APPROVED
OMB No. 158-R0100

FOR AGENCY USE

13. Activity Description Give a narrative description of activity producing this discharge.(see instructions)

213a Production of steam for auxiliary equipment, using a fuel oil-fired boiler.

14. Activity Causing Discharge For each SIC Code which describes the activity causing this discharge, supply the type and maximum amount of either the raw material consumed (item 14a) or the product produced (item 14b) in the units specified in Table I of the instruction Booklet. For SIC Codes not listed in Table I, use raw material or production units normally used for measuring production.(see instructions)

a. Raw Materials

214a	SIC Code (1)	Name (2)	Maximum Amount/Day (3)	Unit (See Table I) (4)	Shared Discharges (Serial Number) (5)
	NA				

b. Products

214b	SIC Code (1)	Name (2)	Maximum Amount/Day (3)	Unit (See Table I) (4)	Shared Discharges (Serial Number) (5)
	4961	Auxiliary Steam	2.64	7-2	370

920980095

FOR AGENCY USE

15. Waste Abatement

a. Waste Abatement Practices - Describe the waste abatement practices used on this discharge with a brief narrative. (See instructions)

218a

Narrative: None. This discharge is river water which is used for cooling an air compressor, a primary boiler feed pump, and the service water system. It is once-through cooling, with no chemical addition, using non-contact heat exchangers. The service water cooler, feed pump and air compressor coolers all discharge separately into the old main circulating water canal, which is stagnant. The circulating pumps for this unit have been retired.

b. Waste Abatement Codes - Using the codes listed in Table II of the Instruction Booklet, describe the waste abatement processes for this discharge in the order in which they occur if possible.

218b

(1) NA . (2) _____ . (3) _____ .
(4) _____ . (5) _____ . (6) _____ .
(7) _____ . (8) _____ . (9) _____ .
(10) _____ . (11) _____ . (12) _____ .
(13) _____ . (14) _____ . (15) _____ .
(16) _____ . (17) _____ . (18) _____ .
(19) _____ . (20) _____ . (21) _____ .
(22) _____ . (23) ? . (24) _____ .
(25) _____ .

920980096

DISCHARGE SERIAL NUMBER

368

FORM APPROVED
OMB No. 158-R0100

FOR AGENCY USE

16. Wastewater Characteristics (See Item No. 26)

Check the box beside each constituent which is present in the effluent (discharge water). This determination is to be based on actual analysis or best estimate.(see instructions)

Parameter B16	Present	Parameter B16	Present
Color 00080		Copper 01042	
Ammonia 00610		Iron 01045	
Organic nitrogen 00605		Lead 01051	
Nitrate 00620		Magnesium 00927	
Nitrite 00615		Manganese 01055	
Phosphorus 00665		Mercury 71900	
Sulfate 00945		Molybdenum 01062	
Sulfide 00745		Nickel 01067	
Sulfite 00740		Selenium 01147	
Bromide 71870		Silver 01077	
Chloride 00940		Potassium 00937	
Cyanide 00720		Sodium 00929	
Fluoride 00951		Thallium 01059	
Aluminum 01105		Titanium 01152	
Antimony 01097		Tin 01102	
Arsenic 01002		Zinc 01092	
Beryllium 01012		Algicides* 74051	
Barium 01007		Chlorinated organic compounds* 74052	
Boron 01022		Pesticides* 74053	
Cadmium 01027		Oil and grease 00550	
Calcium 00916		Phenols 32730	
Cobalt 01037		Surfactants 38260	
Chromium 01034		Chlorine 50060	
Fecal coliform bacteria 74055		Radioactivity* 74050	

*Specify substances, compounds and/or elements in Item 26.

Pesticides (insecticides, fungicides, and rodenticides) must be reported in terms of the acceptable common names specified in *Acceptable Common Names and Chemical Names for the Ingredient Statement on Pesticide Labels*, 2nd Edition, Environmental Protection Agency, Washington, D.C. 20250, June 1972, as required by Subsection 162.7(b) of the Regulations for the Enforcement of the Federal Insecticide, Fungicide, and Rodenticide Act.

920980097

DISCHARGE SERIAL NUMBER
368

HUDSON

FOR AGENCY USE

17. Description of Intake and Discharge

For each of the parameters listed below, enter in the appropriate box the value or code letter answer called for.(see instructions)

In addition, enter the parameter name and code and all required values for any of the following parameters if they were checked in Item 16; ammonia, cyanide, aluminum, arsenic, beryllium, cadmium, chromium, copper, lead, mercury, nickel, selenium, zinc, phenols, oil and grease, and chlorine (residual).

Parameter and Code R17a		Influent: Untreated Intake Water (Daily Average) (1)	Influent: In-Plant Treated Intake Water (Daily Average) (2)	Effluent: Daily Average (3)	Effluent: Minimum Value Observed or Expected During Discharge Activity (4)	Effluent: Maximum Value Observed or Expected During Discharge Activity (5)	Effluent: Frequency of Analysis (6)	Effluent: Number of Analyses (7)	Effluent: Sample Type (8)
Flow* Gallons per day XXXXX 50050	(A)	.28	NA	.28	0	.28	NA	NA	NA
pH Units 00400	(B)	7.1	NA	X	6.5	7.8	NA	NA	NA
Temperature (winter) °F 74028	(C)	39	NA	49	41	60	NA	NA	NA
Temperature (summer) °F 74027	(C)	85	NA	95	87	106	NA	NA	NA
Biochemical Oxygen Demand (BOD 5-day) mg/l 00310	(D)	NA	NA	NA	NA	NA	NA	NA	NA
Chemical Oxygen Demand (COD) mg/l 00340	(D)	NA	NA	NA	NA	NA	NA	NA	NA
Total Suspended (nonfilterable) Solids mg/l 00530	(D)	NA	NA	NA	NA	NA	NA	NA	NA
Specific Conductance micromhos/cm at 25° C 00095	(D)	NA	NA	X	NA	NA	NA	NA	NA
Settleable Matter (residue) ml/l 00545	(D)	NA	NA	NA	NA	NA	NA	NA	NA

*Other discharges sharing intake flow (serial numbers).(see instructions)

(See Item 26 for explanation of A, B, C & D)

920980098

17. (Cont'd.)

Parameter and Code 217a	Influent		Effluent					
	Untreated Intake Water (Daily Average) (1)	In-Plant Treated Intake Water (Daily Average) (2)	Daily Average (3)	Minimum Value Observed or Expected During Discharge Activity (4)	Maximum Value Observed or Expected During Discharge Activity (5)	Frequency of Analysis (6)	Number of Analyses (7)	Sample Type (8)
NA								

18. Plant Controls Check if the following plant controls are available for this discharge. 218

Alternate power source for major pumping facility. ☐ APS

NA

Alarm or emergency procedure for power or equipment failure ☐ ALM

Complete item 19 if discharge is from cooling and/or steam water generation and water treatment additives are used.

19. Water Treatment Additives If the discharge is treated with any conditioner, inhibitor, or algicide, answer the following:

a. Name of Material(s) 219a NA

b. Name and address of manufacturer 219b NA

c. Quantity (pounds added per million gallons of water treated). 219c NA

920980099

DISCHARGE SERIAL NUMBER
368

HUDSON

FOR AGENCY USE

d. Chemical composition of these additives (see instructions). 219d NA

Complete items 20-25 if there is a thermal discharge (e.g., associated with a steam and/or power generation plant, steel mill, petroleum refinery, or any other manufacturing process) and the total discharge flow is 10 million gallons per day or more. (see instructions)

20. Thermal Discharge Source Check the appropriate item(s) indicating the source of the discharge. (see instructions) 220 NA

- Boiler Blowdown ☐ BLSD
- Boiler Chemical Cleaning ☐ BCCL
- Ash Pond Overflow ☐ APOF
- Boiler Water Treatment — Evaporator Blowdown ☐ EPBD
- Oil or Coal Fired Plants — Effluent from Air Pollution Control Devices ☐ OCFP
- Condense Cooling Water ☐ COND
- Cooling Tower Blowdown ☐ CTBD
- Manufacturing Process ☐ MFPR
- Other ☐ OTHR

21. Discharge/Receiving Water Temperature Difference

Give the maximum temperature difference between the discharge and receiving waters for summer and winter operating conditions. (see instructions)

- Summer 221a NA °F.
- Winter 221b NA °F.

22. Discharge Temperature, Rate of Change Per Hour 222 NA °F./hour

Give the maximum possible rate of temperature change per hour of discharge under operating conditions. (see instructions)

23. Water Temperature, Percentile Report (Frequency of Occurrence)

In the table below, enter the temperature which is exceeded 10% of the year, 5% of the year, 1% of the year and not at all (maximum yearly temperature). (see instructions)

Frequency of occurrence

	10%	5%	1%	Maximum
a. Intake Water Temperature (Subject to natural changes) 223a	NA °F	°F	°F	°F
b. Discharge Water Temperature 223b	NA °F	°F	°F	°F

24. Water Intake Velocity 224 NA feet/sec. (see instructions)

25. Retention Time Give the length of time, in minutes, from start of water temperature rise to discharge of cooling water. (see instructions) 225 NA minutes

920980100

HUDSON

FORM APPROVED
OMB No. 158-R0100

DISCHARGE SERIAL NUMBER
368

FOR AGENCY USE

28. Additional Information

Item	Information
216	This effluent is river water used for once-through cooling. Therefore any parameters found in the discharge will also be found in the inlet water (River Water). No chemical additions are made to this cooling water.
217a	A = The flow figure is an estimated value, based on the design capacity of the salt water pump, supplying this cooling water.
	B = Values taken from inlet river water data.
	C = Estimated date
	D = No data available. Analyses not previously required, therefore not performed.

920980101

FORM APPROVED
OMB No. 158-R0100

STANDARD FORM C — MANUFACTURING AND COMMERCIAL

FOR AGENCY USE

SECTION II. BASIC DISCHARGE DESCRIPTION

Complete this section for each discharge indicated in Section I, Item 9, that is to surface waters. This includes discharges to municipal sewerage systems in which the wastewater does not go through a treatment works prior to being discharged to surface waters. Discharges to wells must be described where there are also discharges to surface waters from this facility. SEPARATE DESCRIPTIONS OF EACH DISCHARGE ARE REQUIRED EVEN IF SEVERAL DISCHARGES ORIGINATE IN THE SAME FACILITY. All values for an existing discharge should be representative of the twelve previous months of operation. If this is a proposed discharge, values should reflect best engineering estimates.

ADDITIONAL INSTRUCTIONS FOR SELECTED ITEMS APPEAR IN SEPARATE INSTRUCTION BOOKLET AS INDICATED. REFER TO BOOKLET BEFORE FILLING OUT THESE ITEMS.

1. Discharge Serial No. and Name

   a. Discharge Serial No. (see instructions) — 201a: 369

   b. Discharge Name. Give name of discharge, if any. (see instructions) — 201b: Basement sump pump discharge

   c. Previous Discharge Serial No. If previous permit application was made for this discharge (see item 4, Section I), provide previous discharge serial number. — 201c: NA

2. Discharge Operating Dates

   a. Discharge Began Date. If the discharge described below is in operation, give the date (within best estimate) the discharge began. — 202a: 41 (YR) 7 (MO)

   b. Discharge to Begin Date. If the discharge has never occurred but is planned for some future date, give the date (within best estimate) the discharge will begin. — 202b: NA (YR) (MO)

   c. Discharge to End Date. If discharge is scheduled to be discontinued within the next 5 years, give the date (within best estimate) the discharge will end. — 202c: NA (YR) (MO)

3. Engineering Report Available. Check if an engineering report is available to reviewing agency upon request. (see instructions) — 203: ☐

4. Discharge Location. Name the political boundaries within which the point of discharge is located.

			Agency Use
State	204a	New Jersey	204d
County	204b	Hudson	204e
(If applicable) City or Town	204c	Jersey City	204f

5. Discharge Point Description. Discharge is into (check one): (see instructions)

Stream (includes ditches, arroyos, and other intermittent watercourses)	205a	☒ STR
Lake		☐ LKE
Ocean		☐ OCE
Municipal Sanitary Wastewater Transport System		☐ MTS
Municipal Combined Sanitary and Storm Transport System		☐ MCS

920980102

DISCHARGE SERIAL NUMBER
369

HUDSON

FOR AGENCY USE

Municipal Storm Water Transport System ☐ STS

Well (injection) ☐ WEL

Other ☐ OTH

If "other" is checked, specify — NA

6. Discharge Point — Lat/Long Give the precise location of the point of discharge to the nearest second.

Latitude — 40 DEG 44 MIN 45 SEC

Longitude — 74 DEG 04 MIN 28 SEC

7. Discharge Receiving Water Name Name the waterway at the point of discharge.(see instructions) — Hackensack River

If the discharge is through an outfall that extends beyond the shoreline or is below the mean low water line, complete item 8.

For Agency Use				For Agency Use
Major	Minor	Sub	307a	303a

8. Offshore Discharge

a. Discharge Distance from Shore — NA feet

b. Discharge Depth Below Water Surface — NA feet

9. Discharge Type and Occurrence

a. Type of Discharge Check whether the discharge is continuous or intermittent. (see instructions) — ☐ (con) Continuous ☒ (int) Intermittent

b. Discharge Occurrence Days per Week Enter the average number of days per week (during periods of discharge) this discharge occurs. — 7 days per week

c. Discharge Occurrence — Months If this discharge normally operates (either intermittently, or continuously) on less than a year-around basis (excluding shutdowns for routine maintenance), check the months during the year when the discharge is operating. (see instructions)

☐ JAN ☐ FEB ☐ MAR ☐ APR
☐ MAY ☐ JUN ☐ JUL ☐ AUG NA
☐ SEP ☐ OCT ☐ NOV ☐ DEC

Complete items 10 and 11 if "intermittent" is checked in item 9.a. Otherwise, proceed to item 12.

10. Intermittent Discharge Quantity State the average volume per discharge occurrence in thousands of gallons. — 0.5 thousand gallons per discharge occurrence.

11. Intermittent Discharge Duration and Frequency

a. Intermittent Discharge Duration Per Day State the average number of hours per day the discharge is operating. — 5 hours per day

b. Intermittent Discharge Frequency State the average number of discharge occurrences per day during days when discharging. — 40 discharge occurrences per day

12. Maximum Flow Period Give the time period in which the maximum flow of this discharge occurs. — From 1 (month) to 12 (month)

920980103

DISCHARGE SERIAL NUMBER
369

HUDSON

FORM APPROVED
OMB No. 158-R0100

FOR AGENCY USE

12. Activity Description Give a narrative description of activity producing this discharge (see instructions)

S12a Production of steam for auxiliary equipment, using a fuel oil-fired boiler.

14. Activity Causing Discharge For each SIC Code which describes the activity causing this discharge, supply the type and maximum amount of either the raw material consumed (item 14a) or the product produced (item 14b) in the units specified in Table I of the instruction Booklet. For SIC Codes not listed in Table I, use raw material or production units normally used for measuring production (see instructions)

a. Raw Materials

S14a

SIC Code (1)	Name (2)	Maximum Amount/Day (3)	Unit (See Table I) (4)	Shared Discharges (Serial Number) (5)
NA				

b. Products

S14b

SIC Code (1)	Name (2)	Maximum Amount/Day (3)	Unit (See Table I) (4)	Shared Discharges (Serial Number) (5)
4961	Auxiliary Steam	2.64	Z-2	368

920980104

DISCHARGE SERIAL NUMBER
369

HUDSON

FOR AGENCY USE

15. Waste Abatement

a. Waste Abatement Practices Describe the waste abatement practices used on this discharge with a brief narrative. (see instructions)

215a

Narrative: None. This discharge is primarily river water which has entered the station basement at high tide through cracks, breaks, fissures etc. in the turbine room foundation. Also contributing to this discharge is leakage from the boiler feed and condensate system and the river water cooling system.

b. Waste Abatement Codes Using the codes listed in Table II of the Instruction Booklet, describe the waste abatement processes for this discharge in the order in which they occur if possible.

215b

(1) NA. (2) _____. (3) _____.
(4) _____. (5) _____. (6) _____.
(7) _____. (8) _____. (9) _____.
(10) _____. (11) _____. (12) _____.
(13) _____. (14) _____. (15) _____.
(16) _____. (17) _____. (18) _____.
(19) _____. (20) _____. (21) _____.
(22) _____. (23) _____. (24) _____.
(25) _____.

920980105

DISCHARGE SERIAL NUMBER
369

FORM APPROVED
OMB No. 158-R0100

FOR AGENCY USE

18. Wastewater Characteristics (See Item No. 26)

Check the box beside each constituent which is present in the effluent (discharge water). This determination is to be based on actual analysis or best estimate.(see instructions)

Parameter #16	Present	Parameter #16	Present
Color 00080		Copper 01042	
Ammonia 00610		Iron 01045	
Organic nitrogen 00605		Lead 01051	
Nitrate 00620		Magnesium 00927	
Nitrite 00615		Manganese 01055	
Phosphorus 00665		Mercury 71900	
Sulfate 00945		Molybdenum 01062	
Sulfide 00745		Nickel 01067	
Sulfite 00740		Selenium 01147	
Bromide 71870		Silver 01077	
Chloride 00940		Potassium 00937	
Cyanide 00720		Sodium 00929	
Fluoride 00951		Thallium 01059	
Aluminum 01105		Titanium 01152	
Antimony 01097		Tin 01102	
Arsenic 01002		Zinc 01092	
Beryllium 01012		Algicides* 74051	
Barium 01007		Chlorinated organic compounds* 74052	
Boron 01022		Pesticides* 74053	
Cadmium 01027		Oil and grease 00550	X
Calcium 00916		Phenols 32730	
Cobalt 01037		Surfactants 38260	
Chromium 01034		Chlorine 50060	
Fecal coliform bacteria 74055		Radioactivity* 74050	

*Specify substances, compounds and/or elements in Item 26.

Pesticides (insecticides, fungicides, and rodenticides) must be reported in terms of the acceptable common names specified in *Acceptable Common Names and Chemical Names for the Ingredient Statement on Pesticide Labels*, 2nd Edition, Environmental Protection Agency, Washington, D.C. 20250, June 1972, as required by Subsection 162.7(b) of the Regulations for the Enforcement of the Federal Insecticide, Fungicide, and Rodenticide Act.

920980106

DISCHARGE SERIAL NUMBER
369

HUDSON

FOR AGENCY USE

17. Description of Intake and Discharge

For each of the parameters listed below, enter in the appropriate box the value or code letter answer called for (see instructions)

In addition, enter the parameter name and code and all required values for any of the following parameters if they were checked in Item 16; ammonia, cyanide, aluminum, arsenic, beryllium, cadmium, chromium, copper, lead, mercury, nickel, selenium, zinc, phenols, oil and grease, and chlorine (residual).

Parameter and Code		Influent		Effluent					
		Untreated Intake Water (Daily Average) (1)	In-Plant Treated Intake Water (Daily Average) (2)	Daily Average (3)	Minimum Value Observed or Expected During Discharge Activity (4)	Maximum Value Observed or Expected During Discharge Activity (5)	Frequency of Analysis (6)	Number of Analyses (7)	Sample Type (8)
Flow* Gallons per day 50050	A	.02	NA	.02	.01	.08	ESTIM.	NA	NA
pH Units 00400	B	7.1	NA	X	6.5	7.8	2/7	300	G
Temperature (winter) °F 74028	C	39	NA	42	39	45	NA	NA	NA
Temperature (summer) °F 74027	C	85	NA	87	85	89	NA	NA	NA
Biochemical Oxygen Demand (BOD 5-day) mg/l 00310	E	NA	NA	NA	NA	NA	NA	NA	NA
Chemical Oxygen Demand (COD) mg/l 00340	E	NA	NA	NA	NA	NA	NA	NA	NA
Total Suspended (nonfilterable) Solids mg/l 00530	D	23	NA	30	5	100	NA	NA	NA
Specific Conductance micromhos/cm at 25° C 00095	E	NA	NA	X	NA	NA	NA	NA	NA
Settleable Matter (residue) ml/l 00545	E	NA	NA	NA	NA	NA	NA	NA	NA

*Other discharges sharing intake flow (serial numbers) (see instructions)

(See Item No. 26 for explanation of A, B, C, D, E. & F.)

920980107

FORM APPROVED
OMB No. 158-R0100

DISCHARGE SERIAL NUMBER
369

FOR AGENCY USE

17. (Cont'd.)

Parameter and Code 217a	Influent (F)		Effluent (F)					
	Untreated Intake Water (Daily Average) (1)	In-Plant Treated Intake Water (Daily Average) (2)	Daily Average (3)	Minimum Value Observed or Expected During Discharge Activity (4)	Maximum Value Observed or Expected During Discharge Activity (5)	Frequency of Analysis (6)	Number of Analyses (7)	Sample Type (8)
Oil & Grease 00550	3	NA	15	3	20	NA	NA	NA

18. Plant Controls Check if the following plant controls are available for this discharge. 218

Alternate power source for major pumping facility. ☐ APS

NA

Alarm or emergency procedure for power or equipment failure ☐ ALM

Complete item 19 if discharge is from cooling and/or steam water generation and water treatment additives are used.

19. Water Treatment Additives If the discharge is treated with any conditioner, inhibitor, or algicide, answer the following:

a. Name of Material(s) 219a NA

b. Name and address of manufacturer 219b NA

c. Quantity (pounds added per million gallons of water treated). 219c NA

920980108

DISCHARGE SERIAL NUMBER
369

FOR AGENCY USE

d. Chemical composition of these additives (see instructions). 219d — NA

Complete items 20-25 if there is a thermal discharge (e.g., associated with a steam and/or power generation plant, steel mill, petroleum refinery, or any other manufacturing process) and the total discharge flow is 10 million gallons per day or more. (see instructions)

20. Thermal Discharge Source Check the appropriate item(s) indicating the source of the discharge. (see instructions) — 220 — NA

- ☐ Boiler Blowdown — BLBD
- ☐ Boiler Chemical Cleaning — BCCL
- ☐ Ash Pond Overflow — APOF
- ☐ Boiler Water Treatment — Evaporator Blowdown — EPBD
- ☐ Oil or Coal Fired Plants — Effluent from Air Pollution Control Devices — OCFP
- ☐ Condenser Cooling Water — COND
- ☐ Cooling Tower Blowdown — CTBD
- ☐ Manufacturing Process — MFPR
- ☐ Other — OTHR

21. Discharge/Receiving Water Temperature Difference

Give the maximum temperature difference between the discharge and receiving waters for summer and winter operating conditions. (see instructions)

- Summer — 221a — NA °F.
- Winter — 221b — NA °F.

22. Discharge Temperature, Rate of Change Per Hour — 222 — NA °F./hour

Give the maximum possible rate of temperature change per hour of discharge under operating conditions. (see instructions)

23. Water Temperature, Percentile Report (Frequency of Occurrence)

In the table below, enter the temperature which is exceeded 10% of the year, 5% of the year, 1% of the year and not at all (maximum yearly temperature). (see instructions)

Frequency of occurrence	10%	5%	1%	Maximum
a. Intake Water Temperature (Subject to natural changes) — 223a	NA °F	°F	°F	°F
b. Discharge Water Temperature — 223b	NA °F	°F	°F	°F

24. Water Intake Velocity (see instructions) — 224 — NA feet/sec.

25. Retention Time Give the length of time, in minutes, from start of water temperature rise to discharge of cooling water. (see instructions) — 225 — NA minutes

920980109

FORM APPROVED
OMB No. 158-R0100

DISCHARGE SERIAL NUMBER
369

FOR AGENCY USE

28. Additional Information

Item	Information
210, 211a	These values are estimates. Actual values will vary from
211b	day to day depending upon those factors which affect high
	tide and also the amounts of condensate and cooling water
	leakage at various times
216	The parameters found in this discharge will be those found
	in the inlet water, which is primarily river water. Some
	condensate will be added at times due to system leakage.
	The only parameter that might be found at times is oil and
	grease.
217a	A = Average flow is a value based upon an estimated 30
	sump pump operations per day with an average dis-
	charge of 300 gallons/operation. The maximum value
	is an amount based upon flood pump operation for an
	estimated 30 minutes pumping 45,000 gallons of river
	water at very high, high tide occurrences.
	B = pH values given are those from river water data
	obtained over the past year.
	C = Temperature data are estimated. Since this discharge
	is primarily collected river water and systems leak-
	age, any temperature change from ambient will be
	minimal.
	D = Inlet value for TSS is the average of river water
	samples taken over the past year. Effluent data
	are estimated.

920980110

28. Additional information

Item	Information
217a (Cont'd)	E = No data available for these parameters since no analyses were required for the existing permit.
	F = Values given for oil and grease are estimated and not based on actual samples.

920980111

FORM APPROVED
OMB No. 158-R0100

STANDARD FORM C – MANUFACTURING AND COMMERCIAL

FOR AGENCY USE

SECTION II. BASIC DISCHARGE DESCRIPTION

Complete this section for each discharge indicated in Section I, Item 9, that is to surface waters. This includes discharges to municipal sewerage systems in which the wastewater does not go through a treatment works prior to being discharged to surface waters. Discharges to wells must be described where there are also discharges to surface waters from this facility. **SEPARATE DESCRIPTIONS OF EACH DISCHARGE ARE REQUIRED EVEN IF SEVERAL DISCHARGES ORIGINATE IN THE SAME FACILITY.** All values for an existing discharge should be representative of the twelve previous months of operation. If this is a proposed discharge, values should reflect best engineering estimates.

ADDITIONAL INSTRUCTIONS FOR SELECTED ITEMS APPEAR IN SEPARATE INSTRUCTION BOOKLET AS INDICATED. REFER TO BOOKLET BEFORE FILLING OUT THESE ITEMS.

1. Discharge Serial No. and Name		
a. Discharge Serial No. (see instructions)	201a	370
b. Discharge Name Give name of discharge, if any. (see instructions)	201b	Nos. 51 & 52 Boiler Blowdown
c. Previous Discharge Serial No. If previous permit application was made for this discharge (see Item 4, Section I), provide previous discharge serial number.	201c	421A
2. Discharge Operating Dates		
a. Discharge Began Date If the discharge described below is in operation, give the date (within best estimate) the discharge began.	202a	41 7 (YR MO)
b. Discharge to Begin Date If the discharge has never occurred but is planned for some future date, give the date (within best estimate) the discharge will begin.	202b	NA (YR MO)
c. Discharge to End Date If discharge is scheduled to be discontinued within the next 5 years, give the date (within best estimate) the discharge will end.	202c	81 11 (YR MO)
3. Engineering Report Available Check if an engineering report is available to reviewing agency upon request. (see instructions)	203	☐
4. Discharge Location Name the political boundaries within which the point of discharge is located.		Agency Use
State	204a	New Jersey — 204d
County	204b	Hudson — 204e
(If applicable) City or Town	204c	Jersey City — 204f
5. Discharge Point Description Discharge is into (check one); (see instructions)		
Stream (includes ditches, arroyos, and other intermittent watercourses)	205a	☒ STR
Lake		☐ LKE
Ocean		☐ OCE
Municipal Sanitary Wastewater Transport System		☐ MTS
Municipal Combined Sanitary and Storm Transport System		☐ MCS

920980112

HUDSON

FOR AGENCY USE

Municipal Storm Water Transport System ☐ STS

Well (Injection) ☐ WEL

Other ☐ OTH

If 'other' is checked, specify 205b NA

6. Discharge Point — Lat/Long Give the precise location of the point of discharge to the nearest second.

Latitude 206a 40 DEG 44 MIN 45 SEC

Longitude 206b 74 DEG 04 MIN 29 SEC

7. Discharge Receiving Water Name Name the waterway at the point of discharge.(see instructions) 207a Hackensack River

If the discharge is through an outfall that extends beyond the shoreline or is below the mean low water line, complete Item 8. 207b

For Agency Use

Major	Minor	Sub

207c

For Agency Use

303e

8. Offshore Discharge

a. Discharge Distance from Shore 208a NA feet

b. Discharge Depth Below Water Surface 208b NA feet

9. Discharge Type and Occurrence

a. Type of Discharge Check whether the discharge is continuous or intermittent. (see instructions) 209a ☐ (con) Continuous ☒ (int) Intermittent

b. Discharge Occurrence Days per Week Enter the average number of days per week (during periods of discharge) this discharge occurs. 209b 7 days per week

c. Discharge Occurrence —Months If this discharge normally operates (either intermittently, or continuously) on less than a year-around basis (excluding shutdowns for routine maintenance), check the months during the year when the discharge is operating. (see instructions) 209c ☐ JAN ☐ FEB ☐ MAR ☐ APR ☐ MAY ☐ JUN ☐ JUL ☐ AUG NA ☐ SEP ☐ OCT ☐ NOV ☐ DEC

Complete Items 10 and 11 if "intermittent" is checked in Item 9.a. Otherwise, proceed to Item 12.

10. Intermittent Discharge Quantity State the average volume per discharge occurrence in thousands of gallons. 210 0.15 thousand gallons per discharge occurrence.

11. Intermittent Discharge Duration and Frequency

a. Intermittent Discharge Duration Per Day State the average number of hours per day the discharge is operating. 211a 0.5 hours per day

b. Intermittent Discharge Frequency State the average number of discharge occurrences per day during days when discharging. 211b 1 discharge occurrences per day

12. Maximum Flow Period Give the time period in which the maximum flow of this discharge occurs. 212 From 1 month to 12 month

EPA Form 7550-23 (7-73)

920980113

DISCHARGE SERIAL NUMBER
370

FORM APPROVED
OMB No. 158-R0100

FOR AGENCY USE

13. Activity Description Give a narrative description of activity producing this discharge.(see instructions)

013a Production of steam for auxiliary equipment, using a fuel oil-fired boiler.

14. Activity Causing Discharge For each SIC Code which describes the activity causing this discharge, supply the type and maximum amount of either the raw material consumed (item 14a) or the product produced (item 14b) in the units specified in Table I of the instruction Booklet. For SIC Codes not listed in Table I, use raw material or production units normally used for measuring production.(see instructions)

a. Raw Materials

014a	SIC Code (1)	Name (2)	Maximum Amount/Day (3)	Unit (See Table I) (4)	Shared Discharges (Serial Number) (5)
	NA				

b. Products

014b	SIC Code (1)	Name (2)	Maximum Amount/Day (3)	Unit (See Table I) (4)	Shared Discharges (Serial Number) (5)
	4961	Auxiliary Steam	2.64	Z-2	368

920980114

DISCHARGE SERIAL NUMBER

370

HUDSON

FOR AGENCY USE

15. Waste Abatement

a. Waste Abatement Practices Describe the waste abatement practices used on this discharge with a brief narrative. (see instructions)

215a

Narrative: This effluent is boiler blowdown, which consists of demineralized water, containing 5-10 mg/l of trisodium phosphate, (As PO_4)

b. Waste Abatement Codes Using the codes listed in Table II of the instruction Booklet, describe the waste abatement processes for this discharge in the order in which they occur if possible.

215b

(1) DDOWNG. (2) MIONOX. (3) _____.

(4) _____. (5) _____. (6) _____.

(7) _____. (8) _____. (9) _____.

(10) _____. (11) _____. (12) _____.

(13) _____. (14) _____. (15) _____.

(16) _____. (17) _____. (18) _____.

(19) _____. (20) _____. (21) _____.

(22) _____. (23) ? . (24) _____.

(25) _____.

920980115

DISCHARGE SERIAL NUMBER

370

FORM APPROVED
OMB No. 158-R0100

FOR AGENCY USE

16. Wastewater Characteristics

Check the box beside each constituent which is present in the effluent (discharge water). This determination is to be based on actual analysis or best estimate.(see instructions)

Parameter #16	Present	Parameter #16	Present
Color 00080		Copper 01042	
Ammonia 00610		Iron 01045	
Organic nitrogen 00605		Lead 01051	
Nitrate 00620		Magnesium 00927	
Nitrite 00615		Manganese 01055	
Phosphorus 00665	X	Mercury 71900	
Sulfate 00945		Molybdenum 01062	
Sulfide 00745		Nickel 01067	
Sulfite 00740		Selenium 01147	
Bromide 71870		Silver 01077	
Chloride 00940		Potassium 00937	
Cyanide 00720		Sodium 00929	X
Fluoride 00951		Thallium 01059	
Aluminum 01105		Titanium 01152	
Antimony 01097		Tin 01102	
Arsenic 01002		Zinc 01092	
Beryllium 01012		Algicides* 74051	
Barium 01007		Chlorinated organic compounds* 74052	
Boron 01022		Pesticides* 74053	
Cadmium 01027		Oil and grease 00550	
Calcium 00916		Phenols 32730	
Cobalt 01037		Surfactants 38260	
Chromium 01034		Chlorine 50060	
Fecal coliform bacteria 74055		Radioactivity* 74050	

*Specify substances, compounds and/or elements in Item 26.

Pesticides (insecticides, fungicides, and rodenticides) must be reported in terms of the acceptable common names specified in *Acceptable Common Names and Chemical Names for the Ingredient Statement on Pesticide Labels*, 2nd Edition, Environmental Protection Agency, Washington, D.C. 20250, June 1972, as required by Subsection 162.7(b) of the Regulations for the Enforcement of the Federal Insecticide, Fungicide, and Rodenticide Act.

920980116

DISCHARGE SERIAL NUMBER
370

HUDSON

FOR AGENCY USE

17. Description of Intake and Discharge

For each of the parameters listed below, enter in the appropriate box the value or code letter answer called for. (see instructions)

In addition, enter the parameter name and code and all required values for any of the following parameters if they were checked in Item 16: ammonia, cyanide, aluminum, arsenic, beryllium, cadmium, chromium, copper, lead, mercury, nickel, selenium, zinc, phenols, oil and grease, and chlorine (residual).

Parameter and Code 17a		Influent		Effluent					
		Untreated Intake Water (Daily Average) (1)	In-Plant Treated Intake Water (Daily Average) (2)	Daily Average (3)	Minimum Value Observed or Expected During Discharge Activity (4)	Maximum Value Observed or Expected During Discharge Activity (5)	Frequency of Analysis (6)	Number of Analyses (7)	Sample Type (8)
Flow* Gallons per day 00056	(A)	150	NA	150	0	1,500	NA	NA	NA
pH Units 00400	(B)	6.7	NA	X	9.0	10.0	NA	NA	NA
Temperature (winter) °F 74028	(C)	55	NA	150	120	180	NA	NA	NA
Temperature (summer) °F 74027	(C)	80	NA	150	120	180	NA	NA	NA
Biochemical Oxygen Demand (BOD 5-day) mg/l 00310	(D)	NA	NA	NA	NA	NA	NA	NA	NA
Chemical Oxygen Demand (COD) mg/l 00340	(D)	NA	NA	NA	NA	NA	NA	NA	NA
Total Suspended (nonfilterable) Solids mg/l 00530	(D)	NA	NA	NA	NA	NA	NA	NA	NA
Specific Conductance micromhos/cm at 25° C 00095	(D)	NA	NA	X	NA	NA	NA	NA	NA
Settleable Matter (residue) ml/l 00545	(D)	NA	NA	NA	NA	NA	NA	NA	NA

*Other discharges sharing intake flow (serial numbers). (see instructions)

(See Item No. 26 for explanation of A, B, C, D, E)

920980117

FORM APPROVED
OMB No. 158-R0100

DISCHARGE SERIAL NUMBER
370

FOR AGENCY USE

17. (Cont'd.)

Parameter and Code	Influent		Effluent					
	Untreated Intake Water (Daily Average) (1)	In-Plant Treated Intake Water (Daily Average) (2)	Daily Average (3)	Minimum Value Observed or Expected During Discharge Activity (4)	Maximum Value Observed or Expected During Discharge Activity (5)	Frequency of Analysis (6)	Number of Analyses (7)	Sample Type (8)
Phosphorus (B) 00665	0.03	NA	1.6	1	10	NA	NA	NA
Sodium (B) 00929	31	NA	3.6	2	22	NA	NA	NA

18. Plant Controls Check if the following plant controls are available for this discharge.

Alternate power source for major pumping facility. ☐ APS

Alarm or emergency procedure for power or equipment failure ☐ ALM

Complete item 19 if discharge is from cooling and/or steam water generation and water treatment additives are used.

NA

19. Water Treatment Additives If the discharge is treated with any conditioner, inhibitor, or algicide, answer the following:

a. Name of Material(s) 219a NA

b. Name and address of manufacturer 219b NA

c. Quantity (pounds added per million gallons of water treated). 219c NA

920980118

HUDSON.

FOR AGENCY USE

d. Chemical composition of these additives (see instructions). 219d — NA

Complete items 20-25 if there is a thermal discharge (e.g., associated with a steam and/or power generation plant, steel mill, petroleum refinery, or any other manufacturing process) and the total discharge flow is 10 million gallons per day or more. (see instructions)

20. Thermal Discharge Source Check the appropriate item(s) indicating the source of the discharge. (see instructions) 220 — NA

- Boiler Blowdown — ☐ BLBD
- Boiler Chemical Cleaning — ☐ BCCL
- Ash Pond Overflow — ☐ APOF
- Boiler Water Treatment — Evaporator Blowdown — ☐ EPBD
- Oil or Coal Fired Plants — Effluent from Air Pollution Control Devices — ☐ OCFP
- Condense Cooling Water — ☐ COND
- Cooling Tower Blowdown — ☐ CTBD
- Manufacturing Process — ☐ MFPR
- Other — ☐ OTHR

21. Discharge/Receiving Water Temperature Difference

Give the maximum temperature difference between the discharge and receiving waters for summer and winter operating conditions. (see instructions)

- Summer — 221a — NA °F.
- Winter — 221b — NA °F.

22. Discharge Temperature, Rate of Change Per Hour — 222 — NA °F./hour

Give the maximum possible rate of temperature change per hour of discharge under operating conditions. (see instructions)

23. Water Temperature, Percentile Report (Frequency of Occurrence)

In the table below, enter the temperature which is exceeded 10% of the year, 5% of the year, 1% of the year and not at all (maximum yearly temperature). (see instructions)

Frequency of occurrence

		10%	5%	1%	Maximum
a.	Intake Water Temperature (Subject to natural changes) — 223a	NA °F	°F	°F	°F
b.	Discharge Water Temperature — 223b	°F	°F	°F	°F

24. Water Intake Velocity (see instructions) — 224 — NA feet/sec.

25. Retention Time Give the length of time, in minutes, from start of water temperature rise to discharge of cooling water. (see instructions) — 225 — NA minutes

920980119

HUDSON

FORM APPROVED
OMB No. 158-R0100

DISCHARGE SERIAL NUMBER
370

FOR AGENCY USE

25. Additional Information

Item	Information
216	This discharge is demineralized water with approximately 5 mg/l of trisodium phosphate (as PO_4). The demineralized water was originally city water. Therefore this discharge will contain extremely low level trace amounts of whatever elements were in the city water. The sodium present, after chemical addition is still well below the level found in city water, and the only parameter above the level found in city water or river water is phosphorus.
217a	A = Boiler is normally blowndown once per day for approximately 20-30 minutes at an estimated rate of 2,500 lbs. per hour. (Approximately 150 gallons)
	B = Estimated data
	C = Blowdown is quenched with river water before leaving blowdown tank for the canal. Data are estimated values.
	D = No data available. Analyses not previously required, therefore not performed.

920980120

FORM APPROVED
OMB No. 158-R0100

FOR AGENCY USE
SECRET

STANDARD FORM C — MANUFACTURING AND COMMERCIAL

SECTION III. WASTE ABATEMENT REQUIREMENTS & IMPLEMENTATION (CONSTRUCTION) SCHEDULE

This section requires information on any uncompleted implementation schedule which may have been imposed for construction of waste abatement facilities. Such requirements and implementation schedules may have been established by local, State, or Federal agencies or by court action. In addition to completing the following items, a copy of an official implementation schedule should be attached to this application. **IF YOU ARE SUBJECT TO SEVERAL DIFFERENT IMPLEMENTATION SCHEDULES, EITHER BECAUSE OF DIFFERENT LEVELS OF AUTHORITY IMPOSING DIFFERENT SCHEDULES (Item 1a.) AND/OR STAGED CONSTRUCTION OF SEPARATE OPERATION UNITS (Item 1c), SUBMIT A SEPARATE SECTION III FOR EACH ONE.**

FOR AGENCY USE
SCHED. NO.

1. Improvements

a. Discharge Serial Number Affected List the discharge serial numbers, assigned in Section II, that are covered by this implementation schedule. — 361-A, 361-B

b. Authority Imposing Requirements Check the appropriate item indicating the authority for implementation schedule. If the identical implementation schedule has been ordered by more than one authority, check the appropriate items. (see instructions)

Locally developed plan	☐ LOC
Areawide Plan	☐ ARE
Basic Plan	☐ BAS
State approved implementation schedule	☐ SQS
Federal approved water quality standards implementation plan.	☒ WQS
Federal enforcement procedure or action	☐ ENF
State court order	☐ CRT
Federal court order	☐ FED

c. Facility Requirement. Specify the 3-character code of those listed below that best describes in general terms the requirement of the implementation schedule and the applicable six-character abatement code(s) from Table II of the instruction booklet. If more than one schedule applies to the facility because of a staged construction schedule, state the stage of construction being described here with the appropriate general action code. Submit a separate Section III for each stage of construction planned.

3-character (general): ICT

6-character (specific) (see Table II): ESEGRE, PSEDIM, CCOAGU

New Facility	NEW
Modification (no increase in capacity or treatment)	MOD
Increase in Capacity	INC
Increase in Treatment Level	INT
Both Increase in Treatment Level and Capacity	ICT
Process Change	PRO
Elimination of Discharge	ELI

920980121

HUDSON-

FOR AGENCY USE

2. Implementation Schedule and 3. Actual Completion Dates

Provide dates imposed by schedule and any actual dates of completion for implementation steps listed below. Indicate dates as accurately as possible. (see instructions)

Implementation Steps	2. Schedule (Yr./Mo./Day)	3. Actual Completion (Yr./Mo./Day)
a. Preliminary plan complete	76, 9, 1	76, 9, 3
b. Final plan submission	77, 12, 1	78, 7, 10
c. Final plan complete	78, 10, 1	78, 10, 23
d. Financing complete & contract awarded	78, 10, 4	79, 3, 6
e. Site acquired	NA,	54, 3, 29 and 78/12/27
f. Begin action (e.g., construction)	78, 10, 18	79, 3, 13
g. End action (e.g., construction)	79, 9, 1	NA,
h. Discharge Began	79, 9, 1	NA,
i. Operational level attained	79, 12, 31	NA,

GPO 865-742

EPA Form 7550-23 (7-73)

920980122

920980123

New Jersey Department of Environmental Protection
Division of Water Resources
Industrial Waste Management
CN-029
Trenton, N.J. 08625
(609) 292-4860

PUBLIC NOTICE

NOTICE: ISSUANCE OF DRAFT NJPDES PERMIT NJ0000647

Notice is hereby given that:

Public Service Electric and Gas Company
80 Park Place
Newark, New Jersey 07101

has applied to the New Jersey Department of Environmental Protection (NJDEP) for a New Jersey Pollutant Discharge Elimination System (NJPDES) renewal permit to discharge from the Hudson Generating Station located at Duffield and Van Keuren Avenues, Jersey City, Hudson County, New Jersey to the Hackensack River, classified as TW-3 waters. The applicant operates an electric power generating station (SIC 4931). This facility is defined as a major discharger by the United States Environmental Protection Agency (USEPA).

Five existing discharges enter the Hackensack River via the main discharge canal. Discharge 361 (892.8 MGD) is once-through noncontact cooling water which receives no treatment. The wastewater treatment plant discharge consists of low volume wastes (0.26 MGD) and chemical metal cleaning wastes (0.8 MGD) which undergo oil separation, pH adjustment, polymer addition and sedimentation prior to discharge. Discharge 361P (2.3 MGD) consists of fly ash transport water which flows to two ash ponds in parallel before discharging. Discharge 361R (5.2 MGD) consists of bottom ash transport water which flows to an ash pond before discharging. Discharge 361G (0.38 MGD) consists of untreated stormwater runoff and equipment drains.

Six existing discharges flow directly to the Hackensack River. Discharge 363 (9.96 MGD) is untreated once-through noncontact cooling water from gas turbines used during peak loading periods. Discharge 364 (0.01 MGD) contains miscellaneous noncontact cooling water which receives no treatment. Discharges 365 (9.33 MGD) and 366 (0.54 MGD) are untreated auxiliary noncontact cooling water. Discharge 367 (0.18 MGD) is untreated boiler cooling water. Discharge 369 (0.02 MGD) is untreated cooling water and ground water infiltration.

Two discharges enter the Hackensack River via a second discharge canal. Discharge 368 (0.28 MGD) is untreated miscellaneous noncontact cooling water. Discharge 370 (150 GPD) consists of untreated boiler blowdown.

BJB000004

920980124

For an existing facility, issuance of the NJPDES permit is the enforcement mechanism by which pollutant discharges are brought into compliance with standards.

This notice is being given to inform the public that NJDEP has prepared a draft NJPDES permit. This draft permit contains conditions necessary to implement the provisions of the "Regulations Concerning the New Jersey Pollutant Discharge Elimination System" (N.J.A.C. 7:14A-1 et seq.), which were promulgated pursuant to the authority of the New Jersey "Water Pollution Control Act" (N.J.S.A. 58:10A-1 et seq.), "Solid Waste Management Act" (N.J.S.A. 13:1E-1 et seq.) and the "Pretreatment Standards for Sewage" (N.J.S.A. 58:11-49 et seq.).

The draft permit prepared by NJDEP is based on the administrative record which is on file at the offices of the NJDEP, Division of Water Resources, located at 1474 Prospect Street in the Township of Ewing, Mercer County, New Jersey. It is available for inspection, by appointment, between 8:30 a.m. and 4:00 p.m., Monday through Friday. Appointments for inspection may be scheduled by calling (609) 984-4428.

Interested persons may submit written comments on the draft permit to the Administrator, Water Quality Management, at the address cited above. All comments shall be submitted within 30 days of the date of this public notice. All persons, including applicants, who believe that any condition of this draft permit is inappropriate or that the Department's tentative decision to issue this draft permit is inappropriate, must raise all reasonably ascertainable issues and submit all reasonably available arguments and factual grounds supporting their position, including all supporting material, by the close of the public comment period. All comments submitted by interested persons in response to this notice, within the time limit, will be considered by the NJDEP with respect to the permit application. At the close of the public comment period, the Department will issue or deny the permit. The Department will respond to all significant and timely comments when a final permit is issued. The applicant and each person who has submitted written comments will receive notice of NJDEP's final decision.

Any interested person may request in writing that NJDEP hold a non-adversarial public hearing on the draft permit. This request shall state the nature of the issues to be raised in the proposed hearing and shall be submitted within 30 days of the date of this public notice to the Administrator, Water Quality Management at the address cited above. A public hearing will be conducted whenever the NJDEP determines that there is a significant degree of public interest in the permit decision. If a public hearing is held, the public comment period in this notice shall automatically be extended to the close of the public hearing.

Arnold Schiffman
Administrator
Water Quality Management

920980125

State of New Jersey
Department of Environmental Protection
Division of Water Resources
1474 Prospect St., CN-029
Trenton, New Jersey 08625

FACT SHEET
FOR DRAFT NJPDES PERMIT TO DISCHARGE INTO THE WATERS OF THE STATE OF NEW JERSEY

No. NJPDES | Application No. NJ0000647 | Date:

Name and Address of Applicant: Public Service Electric and Gas Company
80 Park Place
Newark, New Jersey 07101

Name and Address of Facility Where Discharge Occurs: Public Service Electric and Gas Company
Hudson Generating Station
Duffield and Van Keuren Avenues
Jersey City, Hudson County, New Jersey

Receiving Water: Hackensack River

Classification: TW-3

I. LOCATION OF DISCHARGE

The above named applicant has applied for a New Jersey Pollutant Discharge Elimination System (NJPDES) permit, to the State of New Jersey Department of Environmental Protection, Division of Water Resources to discharge into the designated receiving water.

A description and/or sketch of the location of the discharge is appended as Attachment 1.

II. DESCRIPTION OF FACILITY

The subject facility is an electric power generating station which is defined as a major discharger by USEPA.

Five existing discharges enter the Hackensack River via the main discharge canal. Discharge 361 (892.8 MGD) is once-through noncontact cooling water which receives no treatment. The wastewater treatment plant discharge consists of low volume wastes (0.26 MGD) and chemical metal cleaning wastes (0.8 MGD) which undergo oil separation, pH adjustment, polymer addition and sedimentation prior to discharge. Discharge 361P(2.3 MGD) consists of fly ash transport water which flows to two ash ponds in parallel before discharging. Discharge 362 (5.2 MGD) consists of bottom ash transport water which flows to an ash pond before discharging. Discharge 361G(0.38 MGD) consists of untreated stormwater runoff and equipment drains.

920980126

Six existing discharges flow directly to the Hackensack River. Discharge 363(9.96 MGD) is untreated once-through noncontact cooling water from gas turbines used during peak loading periods. Discharge 364 (0.01 MGD) contains miscellaneous noncontact cooling water which receives no treatment. Discharges 365 (9.33 MGD) and 366 (0.54 MGD) are untreated auxiliary noncontact cooling water. Discharge 367 (0.18 MGD) is untreated boiler cooling water. Discharge 369 (0.02 MGD) is untreated cooling water and ground water infiltration.

Two discharges enter the Hackensack River via a second discharge canal. Discharge 368 (0.28 MGD) is untreated miscellaneous noncontact cooling water. Discharge 370 (150 GPD) consists of untreated boiler blowdown.

III. DESCRIPTION OF DRAFT PERMIT CONDITIONS

The effluent limitations, monitoring requirements, schedules of compliance and other conditions of the draft permit are described in Attachment II. Also included in Attachment II is a brief summary of the basis for each effluent limitation and other conditions in the draft permit.

IV. VARIANCE OR MODIFICATION (if applicable)

N/A

V. PROCEDURES FOR REACHING A FINAL DECISION ON THE DRAFT PERMIT

These procedures are set forth in N.J.A.C. 7:14A-7.1 et seq. Included in the public notice are requirements for the submission of comments by a specified date, procedures for requesting a hearing and the nature of the hearing, and other procedures for participation in the final agency decision.

VI. NJDEP CONTACT

Additional information concerning the draft Permit may be obtained between the hours of 8:00 A.M. and 4:30 P.M., Monday through Friday from: Carol Miller at (609) 292-0407.

920980127

ATTACHMENT I
(MAP)

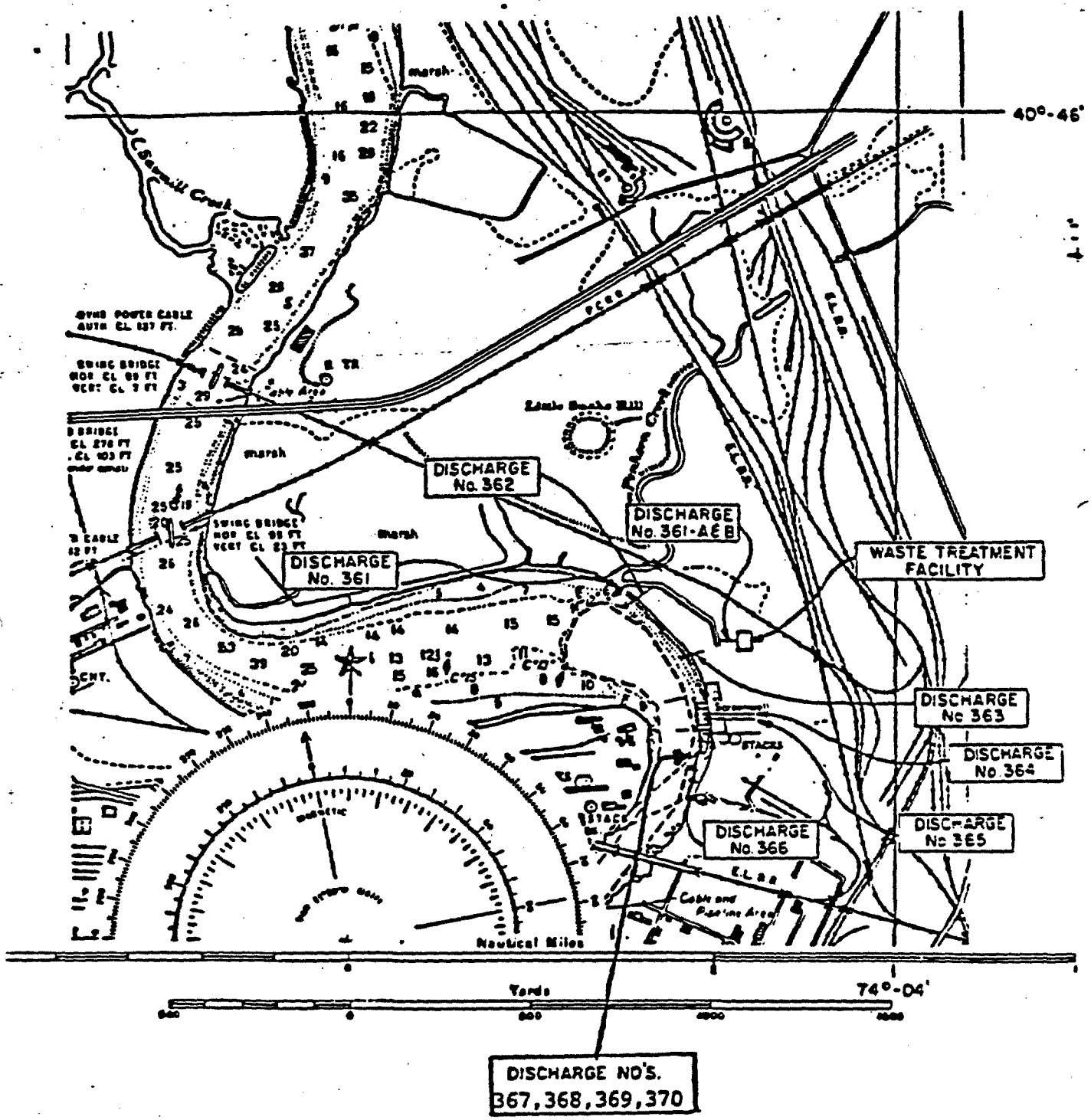

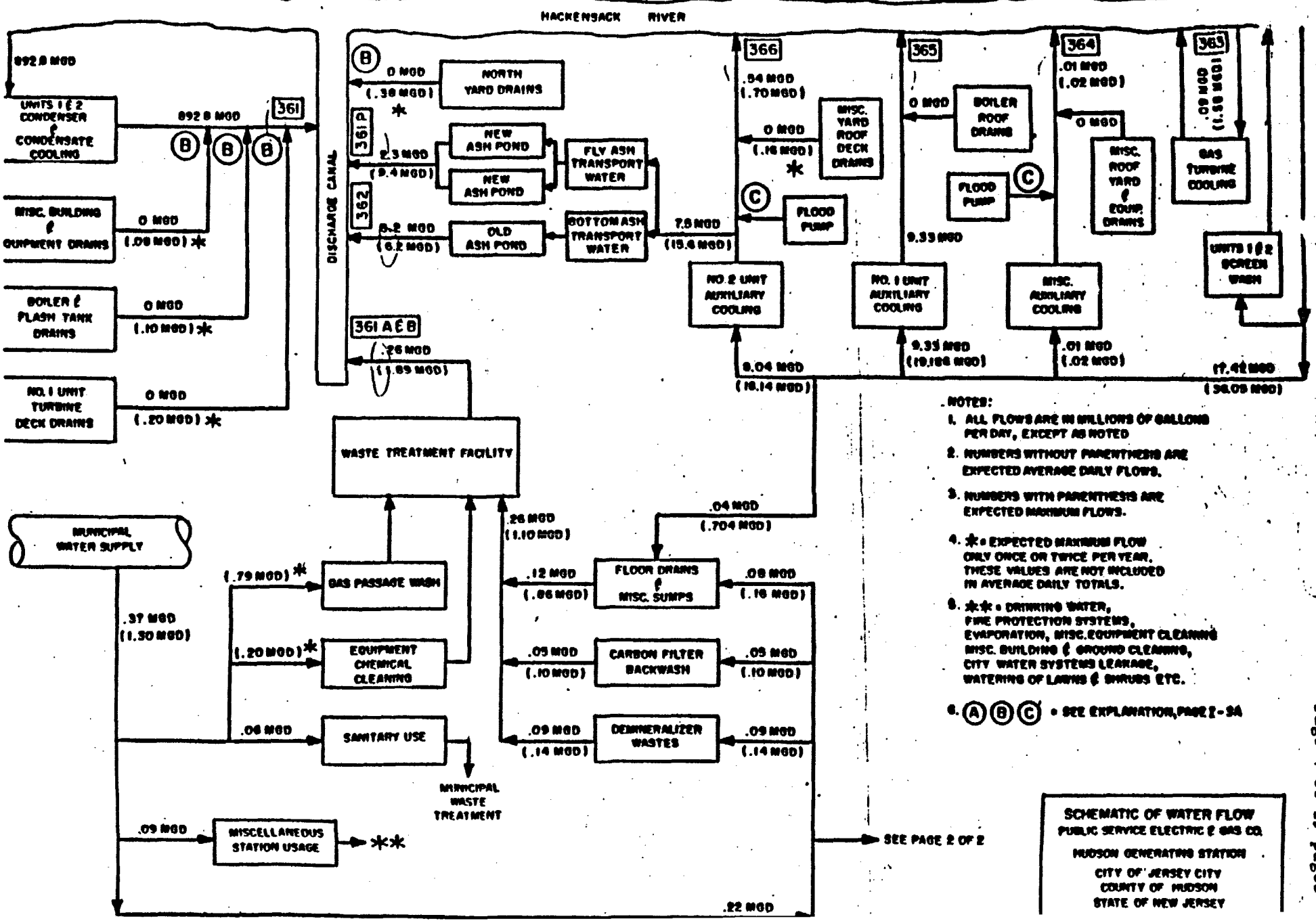

NOTES:

1. ALL FLOWS ARE IN MILLIONS OF GALLONS PER DAY, EXCEPT AS NOTED
2. NUMBERS WITHOUT PARENTHESIS ARE EXPECTED AVERAGE DAILY FLOWS.
3. NUMBERS WITH PARENTHESIS ARE EXPECTED MAXIMUM FLOWS.
4. * = EXPECTED MAXIMUM FLOW ONLY ONCE OR TWICE PER YEAR. THESE VALUES ARE NOT INCLUDED IN AVERAGE DAILY TOTALS.
5. ** = DRINKING WATER, FIRE PROTECTION SYSTEMS, EVAPORATION, MISC. EQUIPMENT CLEANING MISC. BUILDING & GROUND CLEANING, CITY WATER SYSTEMS LEAKAGE, WATERING OF LAWNS & SHRUBS ETC.
6. (A) (B) (C) = SEE EXPLANATION, PAGE 1-3A

SCHEMATIC OF WATER FLOW
PUBLIC SERVICE ELECTRIC & GAS CO.
HUDSON GENERATING STATION
CITY OF JERSEY CITY
COUNTY OF HUDSON
STATE OF NEW JERSEY

920980129

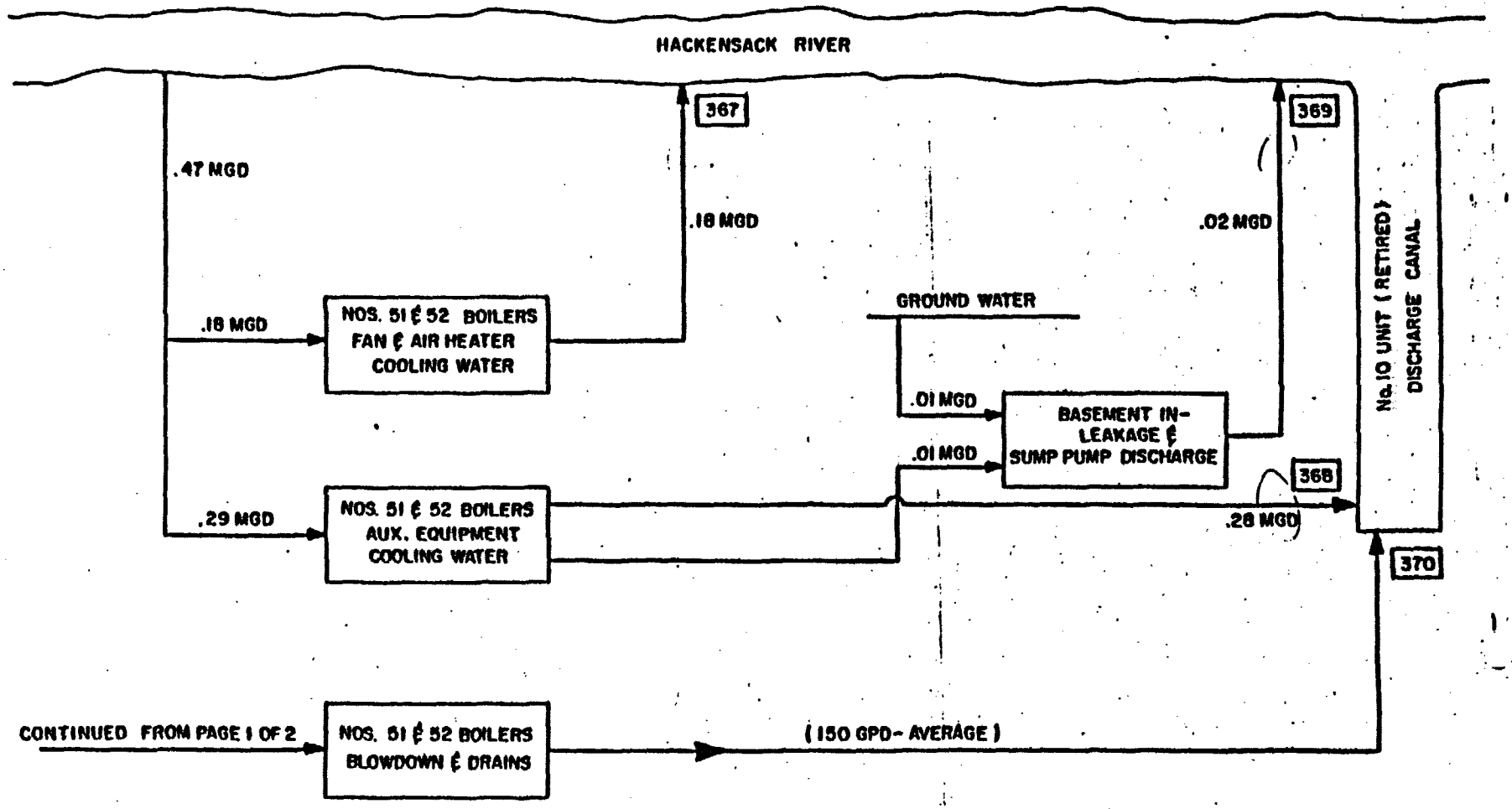

SCHEMATIC OF WATER FLOW
PUBLIC SERVICE ELECTRIC & GAS CO.
HUDSON GENERATING STATION
CITY OF JERSEY CITY
COUNTY OF HUDSON
STATE OF NEW JERSEY
JULY 25, 1979 PAGE 2 OF 2

920980130

ATTACHMENT II

State of New Jersey
Department of Environmental Protection
Division of Water Resources
1474 Prospect St., CN-029
Trenton, New Jersey 08625

STATEMENT OF BASIS
DRAFT NJPDES PERMIT TO
DISCHARGE INTO THE WATERS OF
THE STATE OF NEW JERSEY

NJPDES APPLICATION No. NJ0000647

DESCRIPTION OF LIMITATIONS AND CONDITIONS

Discharge 361 - Main Circulating Water

The effluent limitations for maximum temperature, maximum temperature difference and average free available chlorine remain the same as in the existing permit. The limitations for pH, suspended solids and oil and grease are requirements of the Hackensack Meadowlands Development Commission (HMDC). The limitations for free available chlorine and total residual chlorine are based upon the effluent guidelines for the steam electric power generating point source category (40 CFR 423) for once through cooling water. The net heat limitation has been increased to correspond to the permitted maximum temperature difference. The temperature and net heat limitations are subject to a Section 316(a) determination by NJDEP.

Discharge 361A and B - Wastewater Treatment Plant

The effluent limitations for oil and grease, copper, iron and average suspended solids are from the effluent guidelines for low volume and metal cleaning wastes and are also the same as in the existing permit. The maximum suspended solids limitation is a HMDC requirement. The limitations for chromium, nickel and zinc are Best Professional Judgment (BPJ) based upon information submitted in the renewal application and in the Discharge Monitoring Reports.

Discharge 361G - North Yard Drains

The limitations for oil and grease and chemical oxygen demand are based upon regional EPA guidance for stormwater discharges. The pH and suspended solids limitations are HMDC requirements.

920980131

STATEMENT OF BASIS (con't)

Discharges 361P and 361R - Ash Pond Overflows

The oil and grease and average suspended solids limitations are from the effluent guidelines for fly ash and bottom ash transport water. HMDC requirements apply to temperature, pH and maximum suspended solids. The limitations for arsenic and zinc are BPJ and are applied due to information submitted in the renewal application.

Discharges 363,364,365,366,367 and 368 - Cooling Water

The suspended solids, oil and grease and chemical oxygen demand limitations are based upon regional EPA guidance for cooling water discharges. The temperature and pH limits are HMDC requirements. Monitoring for total residual chlorine is required for discharges 363,364,365 and 366 since these cooling water streams are chlorinated.

Discharge 369 - Sump Pump

The temperature, pH, suspended solids and oil and grease limits are HMDC requirements. The chemical oxygen demand limitation is based upon BPJ.

Discharge 370 - Boiler Blowdown

The limitations for oil and grease and average suspended solids are based upon the effluent guidelines for low volume wastes. The temperature, pH, and maximum suspended solids limits are HMDC requirements.

COMPLIANCE SCHEDULE

See page 26 Part IV. A compliance schedule is necessary to implement the BAT limitation for total residual chlorine for once through cooling water discharges.

920980132

Date Prepared:

PERMIT SUMMARY TABLE

Company: PSE&G - Hudson Generating Station Permit #: NJ0000647 Receiving Waters: Hackensack River via discharge canal

Location: Jersey City; Hudson County Lat: 40°45' 07" Class: TW-3

Long: 74°04' 38" Review Engineer: C. Miller

Direct Discharges: Ave. Flow 892.8 MGD Max. Flow 892.8 MGD Discharge #: 361 - Main Circulating Water (Once through cooling water)

Parameter	Application (7/30/79) TOTAL	Files DMR data	Existing Permit Condition	N.J. Standards SWQS*	HMDC Limits	Technology Based Limits**	Draft Permit Conditions: Limits	Monitor Frequency	Monitor Type
Flow - MGD	Ave 892.8 Max 892.8		NA				NA	Continuous	NA
pH - SU	6.4 - 7.9		6.0 - 9.0	6.5 - 8.5	6.5 - 8.5		6.5 - 8.5	Continuous ***	NA
Max Temp - °C(°F)	W 30.6(87) S 36.7(98)		54.2(129.6)	29.4(85)	29.4(85)		54.2(129.6)	Continuous ***	NA
Max ΔTemp - °C(°F)	W 12.2(22) S 15.6(28)		20.3(36.5)	W 2.2(4.0) S 0.8(1.5)			20.3(36.5)	Calculated	NA
Net Heat Addition - BTU/hr	11.315×10^9 (6/30/82 request)		4.36×10^9				11.32×10^9	Calculated	NA
Free Avail. Chlorine - mg/l	Ave 0.2 Max 0.4		Ave 0.19 max 0.50			Ave 0.2 Max 0.5	Ave 0.19 Max 0.50	Continuous ***	NA
T. Residual Chlorine - mg/l				10 ug/l		Max 0.2	Max 0.2	Continuous ***	NA
Suspended Solids - mg/l				None Noticeable	Max 40		Max 40	Daily	Composite
Oil and Grease - mg/l				None Noticeable	Max 20		Max 20	Twice Weekly	Grab

Notes: * Surface Water Quality Standards, NJAC 7:9-4.7(d)
** 40 CFR Parts 423.12 and 423.13
*** monitored at confluence of discharge canal and Hackensack River.

9209801 33

Date Prepared:

PERMIT SUMMARY TABLE

Company: PSE&G - Hudson Generating Station
Location: Jersey City, Hudson County
Permit #: NJ0000647
Lat: 40°45'00"
Long: 74°04' 25"
Receiving Waters: Hackensack River via canal
Class: TW-3
Review Engineer: CMiller

Direct Discharges:

	Ave. Flow - MGD	Max. Flow - MGD	Discharge #: WTP
	0.26	1.89	361-A Low Volume Wastes
TOTAL	0.8	1.0 (intermittent)	361-B Metal Cleaning Waste

Parameter	Application (7/30/79)	Files	Existing Permit Condition	N.J. Standards SWQS	HMDC Limits	Technology Based Limits	Draft Permit Conditions: Limits	Draft Permit Conditions: Monitor Frequency	Draft Permit Conditions: Monitor Type
FLOW-MGD	max 2.89	1.1u	NA				NA	Continuous	NA
MAX TEMP-°C(°F)	W (65) S (90)			29.4(85)	29.4(85)			*	
pH - SU	6.0-9.0			6.5-8.5	6.5-8.5	6.0-9.0	6.5-8.5	*	
SUSPENDED SOLIDS - mg/l	ave 20 max 100		ave 30 max 100	None Noticeable	max 40	ave 30 max 100	ave 30 max 40	Twice Monthly	Composite
OIL AND GREASE - mg/l	ave 8 max 20		ave 15 max 20	None Noticeable	max 20	ave 15 max 20	ave 15 max 20	Twice Monthly	Grab
PETROLEUM HYDROCARBON - mg/l			NA	None Detectable					
AMMONIA - mg/l	ave 0.05 max 0.20								
CHROMIUM - mg/l	ave 0.1 max 0.2					max 0.5	max 0.5	Twice Monthly	Composite

Notes:

920980134

PERMIT NO. TABLE (continued)

PSE&G - Hudson Generating Station NJ0005647 Discharge # WTP - 361A and B

Parameter	Application 361A	Application 361B	Files	Existing Permit Condition	N.J. Standards SWQS	HMDC Limits	Technology Based Limits	Draft Permit Conditions: Limits	Draft Permit Conditions: Monitor Frequency	Draft Permit Conditions: Monitor Type
COPPER A	0.1	0.2					ave 1.0	ave 1.0	Twice	
- mg/L M	1.0	1.0	max .17	max 1.0			max 1.0	max 1.0	Monthly	Composite
IRON A	0.6	0.8					ave 1.0	ave 1.0	Twice	
- mg/L M	1.0	1.0	max 1.12	max 1.0			max 1.0	max 1.0	Monthly	Composite
NICKEL A	1.0	1.0								
- mg/L M	4.0	4.0	max .3	max 4.0			max 0.5	max 0.5	*	Composite
ZINC A	2.0	2.0								
- mg/L M	3.0	3.0	max .17	max 3.0			max 0.5	max 0.5	*	Composit

* Nickel and Zinc monitored only when discharging metal cleaning wastes.

9209801 35

Date Prepared:

PERMIT SUMMARY TABLE

Company: PSE&G - Hudson Generating Station Permit #: NJ0000647 Receiving Waters: Hackensack River via discharge canal.

Location: Jersey City, Hudson County Lat: 40°45'07" Class: TW-3

Long: 74°04'38" Review Engineer: C. Miller

Direct Discharges: Ave. Flow Max. Flow Discharge #:

0.38 MGD (Intermittent) 361G - North yard drains (Stormwater runoff)

TOTAL

Parameter	Application (7/30/79)	Files	Existing Permit Condition	N.J. Standards SWQS	HMDC Limits	EPA Guidance Limits	Draft Permit Conditions: Limits	Monitor Frequency	Monitor Type
Flow - MGD	max 0.38	NONE AVAILABLE	NOT APPLICABLE				NA	Quarterly	Grab
pH - su				6.5-8.5	6.5-8.5	6.0-9.0	6.5-8.5	*	
Suspended Solids - mg/l				None Noticeable	max 40	max 50	max 40	Quarterly	Grab
Oil and Grease - mg/l				None Noticeable	max 20	max 15	max 15	Quarterly	Grab
COD - mg/l						max 100	max 100	Quarterly	Grab

Notes:

19 pages

920980136

Date Prepared:

PERMIT SUMMARY TABLE

Company: PSE&G - Hudson Generating Station Permit #: NJ0000647 Receiving Waters: Hackensack River via canal

Location: Jersey City, Hudson County Lat: 40°45'07" Class: TW-3

Long: 74°04'36" Review Engineer: C. Miller

Direct Discharges:	Ave. Flow - MGD	Max. Flow - MGD	Discharge #:
	5.2	6.2	361R (362) - Old Ash Pond Overflow
	2.3	9.4	361P - New Ash Pond Overflow

Parameter	Application 362	Application 361P	Files 361R	Files 361F	Existing Permit Condition	N.J. Standards SWQS	HMOC Limits	Technology Based Limits	Draft Permit Conditions: Limits	Draft Permit Conditions: Monitor Frequency	Draft Permit Conditions: Monitor Type
Flow - MGD (TOTAL)	A 5.2 M 6.2	A 2.3 M 9.4			NA				NA	Twice Monthly	Calculated
Max Temp - °C (°F)	W (42) S (85)					29.4 (85)	29.4 (85)			*	
pH - SU	6.0 - 7.74					6.5 - 8.5	6.5 - 8.5	6.0 - 9.0	6.5 - 8.5	*	
Suspended Solids - mg/l (kg/d)	A 16 M 60				Ave (59.2) Max (2160)	None Noticeable	Max 40	Ave 30 Max 100	Ave 30 Max 40	Twice Monthly	Composite
Oil and Grease - mg/l						None Noticeable	Max 20	Ave 15 Max 20	Ave 15 Max 20	Twice Monthly	Grab
Copper - mg/l	A .030 M .061							Ave 0.5 Max 1.0			
Nickel - mg/l	A .030 M .034							Max 0.5			
Zinc - mg/l	A .10 M .30							Max 0.5	max 0.5	Twice Monthly	Composite
Selenium - mg/l	A .010 M .018							Max 0.05			

Notes:

* Temperature will be compliance monitored continuously at the confluence of the canal with the Hackensack River.

920980137

PERMIT SOURCE TABLE (continued)

PSE&G - Hudson Generating Station NJ0000647 Discharges 361R, 361P

Parameter	Application 36.2	Application 361P	Files	Existing Permit Condition	N.J. Standards SWQS	HINOC. Limits	Technology Based Limits	Draft Permit Conditions: Limits	Draft Permit Conditions: Monitor Frequency	Draft Permit Conditions: Monitor Type
Arsenic - mg/l	A .02 M.05.2						Max 0.05	Max 0.05	Twice Monthly	Composite
Cadmium - mg/l	A .003 M.004						Max 0.3			
Chromium - mg/l	A.003 M.015						Max 0.5			
Lead - mg/l	A .02 M.06						Max 0.5			
Mercury - mg/l	A.0007 M.002						Max 0.05			

920980138

Date Prepared:

PERMIT SUMMARY TABLE

Company: USE&G - Hudson Generating Station
Location: Jersey City, Hudson County

Permit #: NJ0000647
Lat: 40°44'58"
Long: 74° 04'29"

Receiving Waters: Hackensack River
Class: TW-3
Review Engineer: C Miller

Direct Discharges: Ave. Flow - MGD 9.96 | Max. Flow - MGD 11.62 (Intermittent) | Discharge #: 303 - Gas Turbine Cooling Water (Noncontact cooling water)

TOTAL

Parameter	Application (7/30/79)	Files	Existing Permit Condition	N.J. Standards SWQS	HMDC Limits	EPA Guidance Limits	Draft Permit Conditions: Limits	Monitor Frequency	Monitor Type
Flow - MGD	Ave 9.96 Max 11.62						NA	Daily	Calc
Max Temp - °C (°F)	W 11.1(52) S 32.8(91)	NONE AVAILABLE	NOT APPLICABLE	29.4(85)	29.4(85)	30(86)	29.4(85)	Daily	Grab
pH - su	6.4 - 7.9			6.5 - 8.5	6.5 - 8.5	6.0 - 9.0	6.5 - 8.5	Daily	Grab
Oil and Grease - mg/l	Ave 4.0 Max 10.0			None Noticeable	Max 20	max 10	max 10	Twice Weekly	Grab
Free Available Chlorine - mg/l	Present								
Total Residual Chlorine - mg/l				Max 10 ug/l			NA	Daily	Grab
Suspended Solids - mg/l				None Noticeable	Max 40	max 20	Max 20	Twice Weekly	Composite
COD - mg/l						Max 50	Max 50	Twice Weekly	Composite

Notes:

Page 14 of 19 pages

920980139

Date Prepared:

PERMIT SUMMARY TABLE

Company: PSE&G - Hudson Generating Station Permit #: NJ0000647 Receiving Waters: Hackensack River

Location: Jersey City, Hudson County Lat: 40°44'58" Class: TW-3

Long: 74°04'27" Review Engineer: C Miller

Direct Discharges: Ave. Flow 4.90 0.01 MGD Max. Flow 11.62-(Intermittent) 0.02 MGD Discharge #: ~~304 - Existing Turbine Cooling Water (Noncontact~~ 304 - Miscellaneous Noncontact Cooling Water

TOTAL

Parameter	Application (7/30/73)		Files	Existing Permit Condition	N.J. Standards SWQS	HMDC Limits	EPA Guidance Limits	Draft Permit Conditions		
								Limits	Monitor Frequency	Monitor Type
MAX FLOW - MGD	11.62	0.02						NA	Quarterly	Grab
MAX TEMP - °C(°F)	W (52) S (71)	W (57) S (87)			29.4(85)	29.4(85)	30(86)	29.4(85)	Quarterly	Grab
pH - SU	6.4-7.9	NA			6.5-8.5	6.5-8.5	6.0-9.0	6.5-8.5	Quarterly	Grab
SUSPENDED SOLIDS - mg/l		NA	Available	Applicable		max 40	max 20	max 20	Quarterly	Grab
OIL AND GREASE - mg/l	A 4.0 m 16.0					max 20	max 10	max 10	Quarterly	Grab
FREE AVAILABLE CHLORINE - mg/l	Present	A 0 m 0.2	None	Not						
TOTAL RESIDUAL CHLORINE - mg/l					10 ug/l			NA	Quarterly	Grab
COD - mg/l							max 50	max 50	Quarterly	Grab

Notes:

920980140

Date Prepared:

PERMIT SUMMARY TABLE

Company: PSE&G- Hudson Generating Station
Permit #: NJ0000647
Receiving Waters: Hackensack River

Location: Jersey City, Hudson County
Lat: 40° 44' 52"
Class: TW-3

Long: 74° 04' 26"
Review Engineer: CMiller

Direct Discharges: Ave. Flow - MGD / Max. Flow - MGD / Discharge #:

	Ave. Flow - MGD	Max. Flow - MGD	Discharge #
	9.33	10.0	365- Unit #1 } Auxiliary Noncontact
	0.54	0.70	366- Unit #2 } Cooling Water
TOTAL			

Parameter	Application 365	Application 366	Files	Existing Permit Condition	N.J. Standards	HMDC Limits	EPA Guidance Limits	Draft Permit Conditions: Limits	Draft Permit Conditions: Monitor Frequency	Draft Permit Conditions: Monitor Type
FLOW - MGD	10.0	0.70	max .52	(366 ONLY) NA				NA	Monthly	Grab
MAX TEMP - °C(°F)	W (51) S (87)	W (51) S (87)			29.4(85)	29.4(85)	30(86)	29.4(85)	Monthly	Grab
pH - SU	NA	6.4-7.9			6.5-8.5	6.5-8.5	6.0-9.0	6.5-8.5	Monthly	Grab
SUSPENDED SOLIDS - mg/l	NA	A 1 m 9	max 25 (17)	Ave 365 Kgld (NET)	None Noticeable	max 40	max 20	max 20	Monthly	Composite
OIL AND GREASE - mg/l	A 4.0 m 10.0	NA			None Noticeable	max 20	max 10	max 10	Monthly	Grab
FREE AVAILABLE CHLORINE - mg/l	A 0 m 0.2	A 0 m 0.2								
TOTAL RESIDUAL CHLORINE - mg/l					10 ug/l			NA	Monthly	Grab
COD - mg/l							max 50	max 50	Monthly	Grab

Notes:

920980141

Date Prepared:

PERMIT SUMMARY TABLE

Company: PSE&G - Hudson Generating Station
Location: Jersey City, Hudson County
Permit #: NJ0000647
Lat: 40°44'45"
Long: 74°04'28"
Receiving Waters: Hackensack River (368 via canal)
Class: TW-3
Review Engineer: CMiller

Direct Discharges:

	Ave. Flow - mgd	Max. Flow - mgd
	0.18	0.18
TOTAL	0.28	0.28

Discharge #:
367 - Bearing Cooling Water
368 - Miscellaneous Noncontact Cooling water

Parameter	Application 367	Application 368	Files	Existing Permit Condition	N.J. Standards Surface	HMDC Limits	EPA Guidance Limits	Draft Permit Conditions: Limits	Monitor Frequency	Monitor Type
~~MAX~~ FLOW - MGD	0.18	0.28						NA	Monthly	Grab
MAX TEMP - °C (°F)	W (60) S (100)	W (60) S (100)			29.4(85)	29.4(85)	30(86)	29.4(85)	Monthly	Grab
pH - SU	6.5-7.8	6.5-7.8			6.5-8.5	6.5-8.5	6.0-9.0	6.5-8.5	Monthly	Grab
SUSPENDED SOLIDS - mg/l	A 18 W 68			Not Applicable	None Noticeable	max 40	max 20	max 20	Monthly	Grab
OIL AND GREASE - mg/l					None Noticeable	max 20	max 10	max 10	Monthly	Grab
COD - mg/l							max 50	max 50	Monthly	Grab

Notes:

920980142

Date Prepared:

PERMIT SUMMARY TABLE

Company: PSE&G - Hudson Generating Station 1 Permit #: NJ0000647 Receiving Waters: Hackensack River

Location: Jersey City, Hudson County Lat: 40°44'45" Class: TW-3

Long: 74°04'.28" Review Engineer: C. Miller

Direct Discharges: Ave. Flow 0.02 MGD Max. Flow 0.08 MGD (intermittent) Discharge #: 369 - Sump Pump (cooling water and ground water infiltration)

TOTAL

Parameter	Application (7/30/79)	Files	Existing Permit Condition	N.J. Standards SWQS	HMDC Limits	Technology Based Limits	Draft Permit Conditions: Limits	Monitor Frequency	Monitor Type
Flow - MGD	Ave 0.02 Max 0.08	NONE AVAILABLE	NOT APPLICABLE				NA	Quarterly	Grab
Max Temp - °C.(°F)	W (45) S (89)			29.4 (85)	29.4(85)		29.4(85)	Quarterly	Grab
pH - su	6.5-7.8			6.5-8.5	6.5-8.5		6.5-8.5	Quarterly	Grab
Suspended Solids - mg/l	Ave 30 Max 100			None Noticable	Max 40		Max 40	Quarterly	Grab
Oil and Grease - mg/l	Ave 15 Max 20			None Noticable	Max 20		Max 20	Quarterly	Grab

Notes:

92098014 3

PERMIT SUMMARY TABLE

Company: PSE&G - Hudson Generating Station
Location: Jersey City, Hudson County
Permit #: NJ0000647
Lat: 40° 44' 45"
Long: 74° 04' 28"
Receiving Waters: Hackensack River via discharge canal
Class: TW-3
Review Engineer: C. Miller

Direct Discharges:
Ave. Flow: 0.00015 MGD
Max. Flow: 0.00015 MGD (intermittent)
Discharge #: 370 - Boiler blowdown (Low volume waste)

TOTAL

Parameter	Application (7/30/79)	Files	Existing Permit Condition	N.J. Standards SWQS	HMDC Limits	Technology Based Limits	Draft Permit Conditions: Limits	Monitor Frequency	Monitor Type
Flow - MGD	max 0.0015						NA	Quarterly	Grab
Max Temp - °C (°F)	W (180) S (180)			29.4(85)	29.4(85)		29.4(85)	Quarterly	Grab
pH - su	9.0-10.0			6.5-8.5	6.5-8.5	6.0-9.0	6.5-8.5	Quarterly	Grab
Phosphorus (PO_4) - mg/l	Ave 1.6 Max 10.0				Max 30				
Sodium - mg/l	Ave 3.6 Max 22.0								
Suspended Solids - mg/l				None Noticeable	Max 40	Ave 30 Max 100	Ave 30 Max 40	Quarterly	Grab
Oil and Grease - mg/l				None Noticeable	Max 20	Ave 15 Max 20	Ave 15 Max 20	Quarterly	Grab

Notes:

920980144

Let's protect our earth

STATE OF NEW JERSEY
DEPARTMENT OF ENVIRONMENTAL PROTECTION
P.O. Box 1390
Trenton, N.J. 08625

PERMIT*

The New Jersey Department of Environmental Protection grants this permit in accordance with your application, attachments accompanying same application, and applicable laws and regulations. This permit is also subject to the further conditions and stipulations enumerated in the supporting documents which are agreed to by the permittee upon acceptance of the permit.

Permit No.	Issuance Date	Effective Date	Expiration Date
NJ0000647	-	EDP	EDP + 5 years

Name and Address of Applicant	Location of Activity/Facility	Name and Address of Owner
Public Service Electric and Gas Company 80 Park Place Newark, New Jersey 07101	Hudson Generating Station Duffield and Van Keuren Aves. Jersey City, Hudson County, New Jersey	Same as applicant

Issuing Division	Type of Permit	Statute(s)	Application No.
☒ Water Resources ☐ Coastal Resources ☐ Environmental Quality	NJPDES/DSW	N.J.S.A. 58:10A-1 et seq.	NJ0000647

This permit grants permission to:

discharge to the Hackensack River, classified as TW-3 waters, in accordance with the effluent limitations, monitoring requirements and other conditions set forth in Parts I, II, III and IV hereof.

Approved by the Department of Environmental Protection
by authority of:
John W. Gaston, Jr., P.E.
Director
Water Qual. Mgmt., Div. Water Resources

Arnold Schiffman
Administrator
Water Quality Management

DATE

*word permit means "approval, certification, etc."

DEP-007

(GENERAL CONDITIONS ARE ON THE REVERSE SIDE

920980145

A.3. EFFLUENT LIMITATIONS AND MONITORING REQUIREMENTS

During the period beginning EDP and lasting through 5 years from EDP the permittee is authorized to discharge from outfall(s) serial number(s) 361 A and B* (WTP).

Such discharges shall be limited and monitored by the permittee as specified below:

Effluent Characteristic	Discharge Limitations kgs/day (lbs/day)		Discharge Limitations other units (specified)		Monitoring Requirements Measurement Frequency	Monitoring Requirements Sample Type
	Avg. Monthly	Max. Daily	Avg. Monthly	Max. Daily		
Flow-m^3/Day (MGD)	NA	NA	NA	NA	Continuous	NA
Suspended Solids	NA	NA	30 mg/l	40 mg/l	Twice Monthly	Composite
Oil and Grease	NA	NA	15 mg/l	20 mg/l	Twice Monthly	Grab
Chromium	NA	NA	NA	0.5 mg/l	Twice Monthly	Composite
Copper	NA	NA	1.0 mg/l	1.0 mg/l	Twice Monthly	Composite
Iron	NA	NA	1.0 mg/l	1.0 mg/l	Twice Monthly	Composite
Nickel	NA	NA	NA	0.5 mg/l	*	Composite
Zinc	NA	NA	NA	0.5 mg/l	*	Composite

PH ?

There shall be no discharge of floating solids or visible foam in other than trace amounts.

Samples taken in compliance with the monitoring requirements specified above shall be taken at the following location(s): at the outfall of the wastewater treatment plant discharge to the discharge canal.

* During discharge of metal cleaning wastes, suspended solids, oil and grease, chromium, copper, nickel and zinc shall be monitored by taking composite samples (grab every 4 hours for oil and grease) over the duration of the cleaning waste discharge. Monitoring for nickel and zinc is required only during discharge of metal cleaning wastes.

920980146

A.5. EFFLUENT LIMITATIONS AND MONITORING REQUIREMENTS

During the period beginning EDP and lasting through 5 years from EDP the permittee is authorized to discharge from outfall(s) serial number(s) 361 R (Old Ash Pond Overflow) and 361 P (New Ash Pond Overflow).

Such discharges shall be limited and monitored by the permittee as specified below:

Effluent Characteristic	Discharge Limitations kgs/day (lbs/day)		Discharge Limitations other units (specified)		Monitoring Requirements	
	Avg. Monthly	Max. Daily	Avg. Monthly	Max. Daily	Measurement Frequency	Sample Type
Flow-m^3/Day (MGD)	NA	NA	NA	NA	Twice Monthly	Calculated
Suspended Solids	NA	NA	30 mg/1	40 mg/1	Twice Monthly	Composite
Oil and Grease	NA	NA	15 mg/1	20 mg/1	Twice Monthly	Grab
Zinc	NA	NA	NA	0.5 mg/1	Twice Monthly	Composite
Arsenic	NA	NA	NA	0.05 mg/1	Twice Monthly	Composite

PH:

There shall be no discharge of floating solids or visible foam in other than trace amounts.

Samples taken in compliance with the monitoring requirements specified above shall be taken at the following location(s): at the outfalls of discharges 361 R and 361 P to the discharge canal.

920980147

920980148

New Jersey Department of Environmental Protection
Division of Water Resources
Bureau of Industrial Waste Management
CN-029
Trenton, N.J. 08625
(609) 292-0407

PUBLIC NOTICE

MAY 15 1986

Notice is hereby given that the New Jersey Department of Environmental Protection, Division of Water Resources proposes to restrict and control the discharge of pollutants to the Hackensack River classified as SE3 waters, from:

PUBLIC SERVICE ELECTRIC AND GAS COMPANY
HUDSON AND MARION GENERATING STATIONS
DUFFIELD AND VAN KEUREN AVENUES
JERSEY CITY, HUDSON COUNTY, NEW JERSEY

The applicant operates two adjacent electric power generating stations (SIC 4911) which will be permitted jointly under a single permit. The Marion Station is currently permitted under NJPDES permit NJ0000671.

Five existing discharges enter the Hackensack River via the main discharge canal. Discharge 361 (892.8 MGD) is once-through noncontact cooling water which receives no treatment. The wastewater treatment plant discharge consists of low volume wastes (0.26 MGD) and chemical metal cleaning wastes (0.8 MGD) which undergo oil separation, pH adjustment, polymer addition and sedimentation prior to discharge. Discharge 361P (2.3 MGD) consists of fly ash transport water which flows to two ash ponds in parallel before discharging. Discharge 361R (5.2 MGD) consists of bottom ash transport water which flows to an ash pond before discharging. Discharge 361G (0.38 MGD) consists of untreated stormwater runoff and equipment drainage.

Ten existing discharges flow directly to the Hackensack River. Discharge 363 (0.09 MGD) is prechlorinated once-through noncontact cooling water from gas turbines used during peak loading periods.

Discharges 364 (0.01 MGD), 365 (9.33 MGD) and 366 (0.54 MGD) are miscellaneous prechlorinated noncontact cooling water discharges which receive no treatment. Discharges 367 (0.18 MGD), 422 (0.18 MGD) and 424 (0.288 MGD) are miscellaneous untreated noncontact cooling water discharges. Discharges 369 (0.02 MGD) consists of untreated noncontact cooling water and ground water infiltration. Discharge 423 (0.009 MGD) is untreated ground water infiltration. Discharge 425 (150 GPD) is untreated blowdown from a fuel oil fired boiler which generates auxiliary steam for the Hudson Station.

BJ8000005

920980149

Two discharges enter the Hackensack River via a second discharge canal. Discharge 368 (0.28 MGD) is untreated miscellaneous noncontact cooling water. Discharge 370 (150 GPD) consists of untreated boiler blowdown.

The facility has been classified as a major discharger by the New Jersey Department of Environmental Protection in accordance with the U.S. EPA rating criteria.

The permittee/applicant submitted extensive technical data and studies (pursuant to Section 316 of the Federal Clean Water Act) to Region II of the United States Environmental Protection Agency (USEPA) in regard to its thermal discharge(s) and to its intake structure(s). The permittee/applicant claims that these studies (1) demonstrate that its thermal discharge(s) do not preclude the protection and propagation of a balanced and indigenous population of shellfish, fish and wildlife in and on the receiving waters and (2) demonstrate that the cooling water intake structure reflects the best available technology for minimizing adverse environmental impact. NJDEP is committed to reach a determination in regard to these 316 studies as expeditiously as possible.

This notice is being given to inform the public that NJDEP has prepared a draft NEW JERSEY POLLUTANT DISCHARGE ELIMINATION SYSTEM (NJPDES) permit (NJPDES Permit No. NJ0000647) in accordance with the "Regulations Concerning the New Jersey Pollutant Discharge Elimination System" (N.J.A.C. 7:14A-1 et seq.), which were promulgated pursuant to the authority of the New Jersey "Water Pollution Control Act" (N.J.S.A. 58:10A-1 et seq.).

This is an existing facility, and issuance of a NJPDES permit is the enforcement mechanism by which pollutant discharges are brought into compliance with standards. The draft permit contains these conditions necessary to restrict the discharge of pollutants and protect the public health and environment.

The draft document prepared by NJDEP is based on the administrative record which is on file at the offices of the NJDEP, Division of Water Resources, located at 1474 Prospect Street in the Township of Ewing, Mercer County, New Jersey. It is available for inspection, by appointment, between 8:30 a.m. and 4:00 p.m., Monday through Friday. Appointments for inspection of the file may be scheduled by calling (609) 633-6620. Copies of the draft permit may be obtained for a nominal charge by contacting the Department.

920980150

Interested persons may submit written comments on the draft document to the Administrator, Water Quality Management, at the address cited above. All comments must be submitted within 30 days of the date of this public notice. All persons, including applicants, who believe that any condition of this draft document is inappropriate or that the Department's tentative decision to issue this draft permit is inappropriate, must raise all reasonably ascertainable issues and submit all reasonably available arguments and factual grounds supporting their position, including all supporting material, by the close of the public comment period. All comments submitted by interested persons in response to this notice, within the time limit, will be considered by the NJDEP with respect to the permit. At the close of the public comment period, the Department will issue or deny the permit. The Department will respond to all significant and timely comments when a final decision is issued. The applicant and each person who has submitted written comments will receive notice of NJDEP's final decision.

Any interested person may request in writing that NJDEP hold a non-adversarial public hearing on the draft document. This request shall state the nature of the issues to be raised in the proposed hearing as detailed above, and shall be submitted within 30 days of the date of this public notice to the Administrator, Water Quality Management, at the address cited above. A public hearing will be conducted whenever the NJDEP determines that there is a significant degree of public interest. If a public hearing is held, the public comment period in this notice shall automatically be extended to the close of the public hearing.

Additional information concerning the draft permit may be obtained between the hours of 8:00 a.m. and 4:30 p.m., Monday through Friday from: Melisse Wilusz at (609) 292-0407.

Arnold Schiffman
Administrator
Water Quality Management

920980151

State of New Jersey
Department of Environmental Protection
Division of Water Resources
1474 Prospect Street, CN-029
Trenton, New Jersey 08625

FACT SHEET
FOR DRAFT NJPDES PERMIT TO DISCHARGE INTO THE WATERS OF THE STATE OF NEW JERSEY

Permit No. NJ0000647	Date:
Name and Address of Applicant:	Public Service Electric and Gas Company 80 Park Place Newark, New Jersey 07101
Name and Address of Facility where Discharge Occurs:	Public Service Electric and Gas Company Hudson and Marion Generating Stations Duffield and Van Keuren Avenues Jersey City, Hudson County, New Jersey
Receiving Water:	Hackensack River
Classification:	SE3

I. DESCRIPTION OF FACILITY

The above named applicant has applied for a New Jersey Pollutant Discharge Elimination System (NJPDES) permit, to the State of New Jersey Department of Environmental Protection, Division of Water Resources to discharge into the designated receiving water. A location map of the facility is included on page 3.

Five existing discharges enter the Hackensack River via the main discharge canal, Discharge 361, including 892.8 MGD of prechlorinated once-through noncontact cooling water which receives no treatment. The wastewater treatment plant discharge consists of low volume wastes (0.26 MGD) and chemical metal cleaning wastes (0.8 MGD) which undergo oil separation, pH adjustment, polymer addition and sedimentation prior to discharge. Discharge 361P (2.3 MGD) consists of fly ash transport water which flows to two ash ponds in parallel before discharging. Discharge 361 R (5.2 MGD) consists of bottom ash transport water which flows to an ash pond before discharging. Discharge 361 G (0.38 MGD) consists of untreated stormwater runoff and equipment drains.

920980152

Ten existing discharges flow directly to the Hackensack River. Discharge 363 (0.09 MGD) is prechlorinated once-through noncontact cooling water from gas turbines used during peak loading periods. Discharges 364 (0.01 MGD), 365 (9.33 MGD) and 366 (0.54 MGD) are miscellaneous prechlorinated noncontact cooling water discharges. Discharges 367 (0.18 MGD), 422 (0.18 MGD) and 424 (0.288 MGD) are miscellaneous noncontact cooling water discharges which receive no treatment. Discharge 369 (0.02 MGD) consists of untreated noncontact cooling water and ground water infiltration. Discharge 423 (0.009 MGD) is ground water infiltration. Discharge 425 (0.00015 MGD) is untreated blowdown from a fuel oil fired boiler which generates auxiliary steam for the Hudson Station.

Two discharges enter the Hackensack River via a second discharge canal. Discharge 368 (0.28 MGD) is untreated miscellaneous noncontact cooling water. Discharge 370 (0.00015 MGD) consists of untreated boiler blowdown.

II. DESCRIPTION OF DRAFT PERMIT CONDITIONS

The existing and proposed effluent limitations and other pertinent information regarding the draft permit are described in the Permit Summary Table (page 4). Also included is a brief summary of the basis for each effluent limitation and other conditions in the draft permit (page 5).

III. VARIANCE OR MODIFICATION (if applicable)

Reopener clause for Thermal Effluent Limitations, see permit page 2, Part IV, and the attached page.

IV. PROCEDURES FOR REACHING A FINAL DECISION ON THE DRAFT PERMIT

These procedures are set forth in N.J.A.C. 7:14A-7.1 et seq.. Included in the public notice are requirements for the submission of comments by a specified date, procedures for requesting a hearing and the nature of the hearing, and other procedures for participation in the final agency decision.

V. NJDEP CONTACT

Additional information concerning the Draft Permit may be obtained between the hours of 8:00 A.M. and 4:30 P.M., Monday through Friday from: Melisse Wilusz, Industrial Permits Section, at (609)292-0407.

920980153

VARIANCE OR MODIFICATION

The permittee submitted extensive technical data and studies, pursuant to Section 316 of the Federal Clean Water Act, to Region II of the U.S. EPA in regard to: its thermal discharge(s) and to its intake structure(s). The EPA delegated responsibility for administration of the permit program to the State in April, 1982. As a result of this delegation, NJDEP has responsibility for issuing final determinations with respect to Section 316.

The applicant claims that its 316 studies demonstrate that its thermal discharge(s) do not preclude the protection and propagation of a balanced, indigenous population of shellfish, fish and wildlife in and on the receiving water and that the cooling water intake structure(s) reflects the best available technology for minimizing adverse environmental impact.

The New Jersey Department of Environmental Protection (NJDEP) is committed to reach a determination in regard to PSE&G's studies as expeditiously as possible. Regulatory action (such as modification of PSE&G's discharge permit) would be initiated upon completion of NJDEP's technical review of PSE&G's 316 studies. The term of the permit has been shortened (from the 5 year term allowed in applicable Federal and State Laws and Regulations) to facilitate the inclusion of appropriate Section 316 related conditions. In addition, a Section 316 reopener clause has been included (see Part IV of the draft permit) to provide for inclusion of Section 316 related conditions if the NJDEP completes its review prior to the expiration date of the permit.

920980154

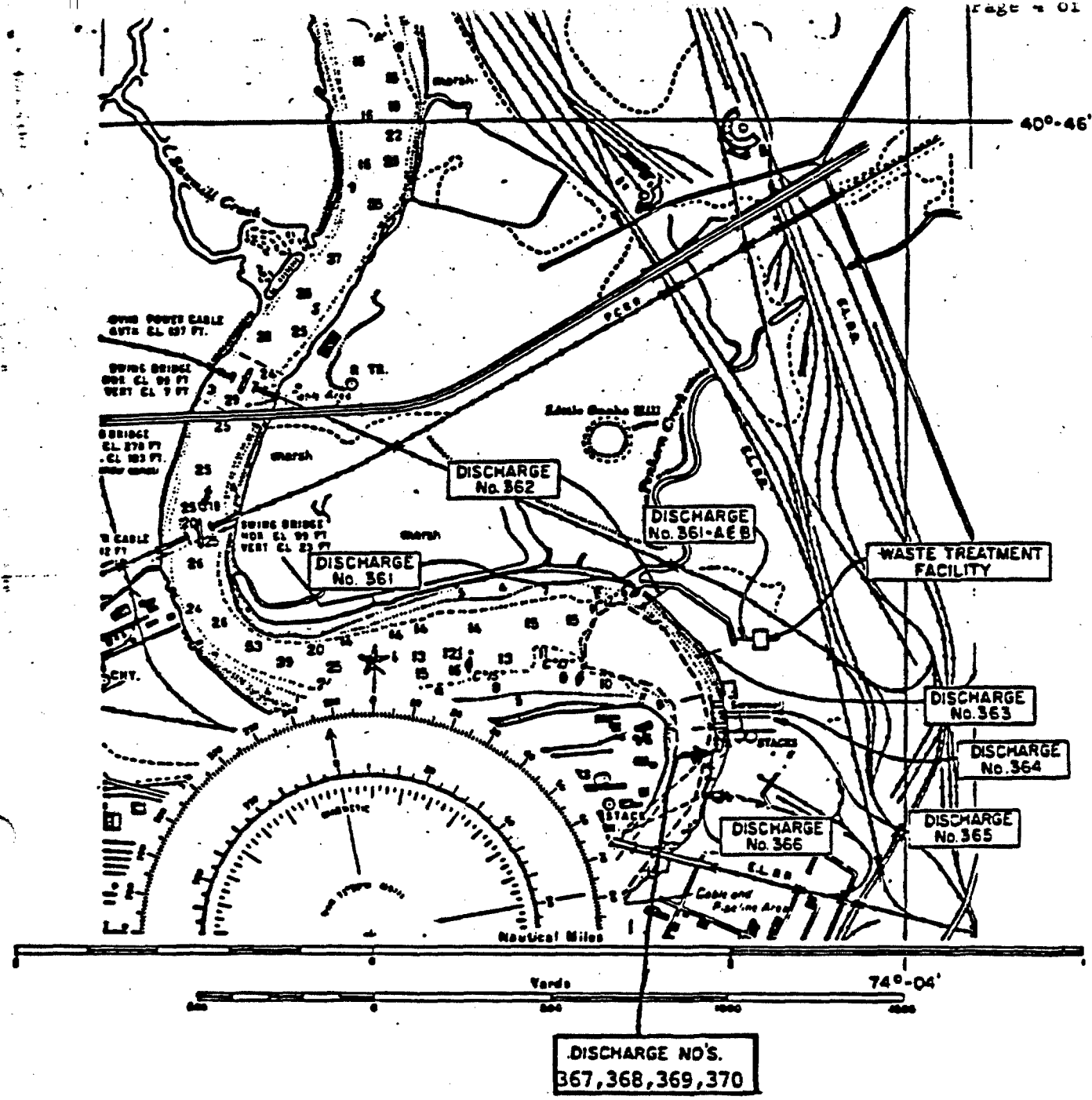

LOCATION MAP
FROM C. & G.S. MAP No. 12337
PUBLIC SERVICE ELECTRIC & GAS CO.
HUDSON GENERATING STATION
CITY OF JERSEY CITY
COUNTY OF HUDSON
STATE OF NEW JERSEY
JUNE 18, 1979 PAGE 1 OF 1

920980155

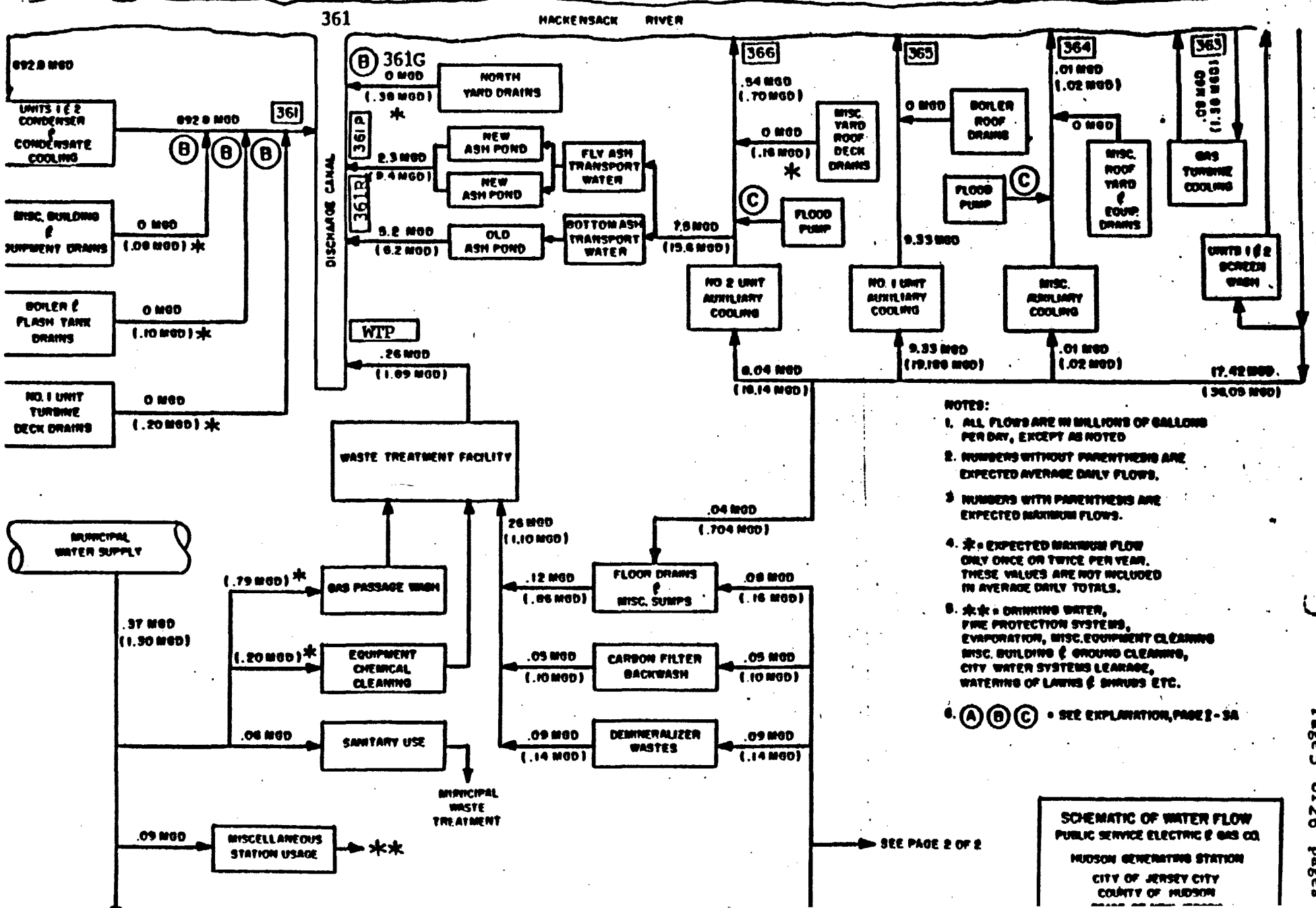
361
HACKENSACK RIVER
692.8 MGD
UNITS 1 & 2 CONDENSER & CONDENSATE COOLING
692.8 MGD
361
MISC. BUILDING & EQUIPMENT DRAINS
0 MGD
(.08 MGD) *
BOILER & FLASH TANK DRAINS
0 MGD
(.10 MGD) *
NO. 1 UNIT TURBINE DECK DRAINS
0 MGD
(.20 MGD) *
DISCHARGE CANAL
361G
0 MGD
(.38 MGD) *
NORTH YARD DRAINS
361P
2.3 MGD
(9.4 MGD)
NEW ASH POND
NEW ASH POND
FLY ASH TRANSPORT WATER
361R
5.2 MGD
(6.2 MGD)
OLD ASH POND
BOTTOM ASH TRANSPORT WATER
7.8 MGD
(15.6 MGD)
366
.54 MGD
(.70 MGD)
0 MGD
(.16 MGD) *
MISC. YARD ROOF DECK DRAINS
FLOOD PUMP
NO 2 UNIT AUXILIARY COOLING
8.04 MGD
(16.14 MGD)
365
0 MGD
BOILER ROOF DRAINS
FLOOD PUMP
9.33 MGD
NO. 1 UNIT AUXILIARY COOLING
9.33 MGD
(19.166 MGD)
364
.01 MGD
(.02 MGD)
0 MGD
MISC. ROOF YARD & EQUIP. DRAINS
MISC. AUXILIARY COOLING
.01 MGD
(.02 MGD)
363
GAS TURBINE COOLING
UNITS 1 & 2 SCREEN WASH
17.42 MGD.
(38.09 MGD)
WTP
.26 MGD
(1.09 MGD)
WASTE TREATMENT FACILITY
.26 MGD
(1.10 MGD)
.04 MGD
(.704 MGD)
MUNICIPAL WATER SUPPLY
.97 MGD
(1.90 MGD)
(.79 MGD) *
GAS PASSAGE WASH
(.20 MGD) *
EQUIPMENT CHEMICAL CLEANING
.06 MGD
SANITARY USE
MUNICIPAL WASTE TREATMENT
.09 MGD
MISCELLANEOUS STATION USAGE
**
.12 MGD
(.86 MGD)
FLOOR DRAINS & MISC. SUMPS
.08 MGD
(.16 MGD)
.05 MGD
(.10 MGD)
CARBON FILTER BACKWASH
.05 MGD
(.10 MGD)
.09 MGD
(.14 MGD)
DEMINERALIZER WASTES
.09 MGD
(.14 MGD)
SEE PAGE 2 OF 2
NOTES:
1. ALL FLOWS ARE IN MILLIONS OF GALLONS PER DAY, EXCEPT AS NOTED
2. NUMBERS WITHOUT PARENTHESIS ARE EXPECTED AVERAGE DAILY FLOWS.
3. NUMBERS WITH PARENTHESIS ARE EXPECTED MAXIMUM FLOWS.
4. * = EXPECTED MAXIMUM FLOW ONLY ONCE OR TWICE PER YEAR. THESE VALUES ARE NOT INCLUDED IN AVERAGE DAILY TOTALS.
5. ** = DRINKING WATER, FIRE PROTECTION SYSTEMS, EVAPORATION, MISC. EQUIPMENT CLEANING MISC. BUILDING & GROUND CLEANING, CITY WATER SYSTEMS LEAKAGE, WATERING OF LAWNS & SHRUBS ETC.
6. (A) (B) (C) = SEE EXPLANATION, PAGE 2-5A
SCHEMATIC OF WATER FLOW
PUBLIC SERVICE ELECTRIC & GAS CO.
HUDSON GENERATING STATION
CITY OF JERSEY CITY
COUNTY OF HUDSON

920980156

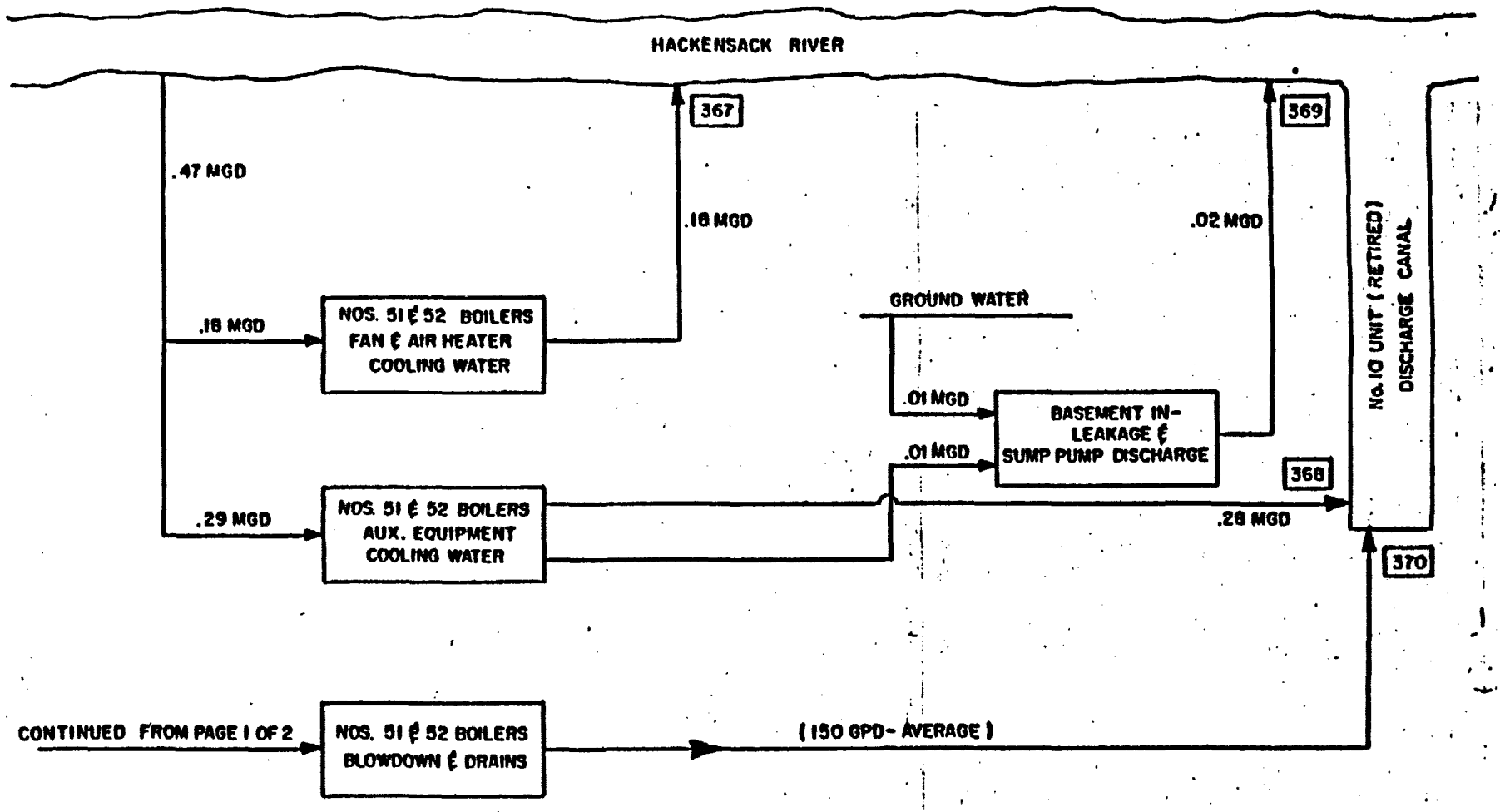

SCHEMATIC OF WATER FLOW
PUBLIC SERVICE ELECTRIC & GAS CO.
HUDSON GENERATING STATION
CITY OF JERSEY CITY
COUNTY OF HUDSON
STATE OF NEW JERSEY
JULY 25, 1979 PAGE 2 OF 2

9209080157

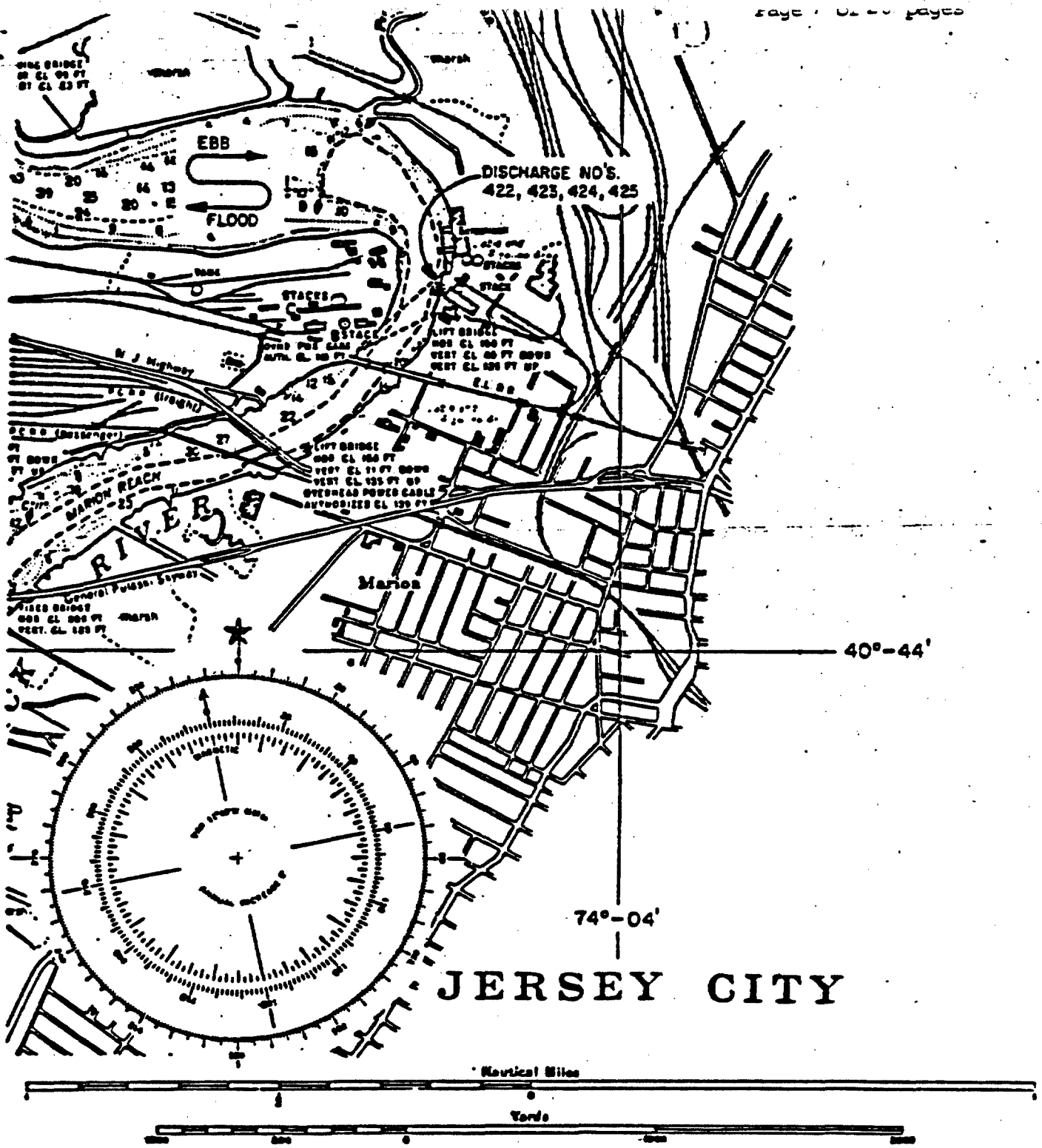

LOCATION MAP
FROM C. & G.S. MAP No. 12337
PUBLIC SERVICE ELECTRIC & GAS CO.
MARION GENERATING STATION
JERSEY CITY
COUNTY OF HUDSON
STATE OF NEW JERSEY
MAY 7, 1979 PAGE 1 OF 1

920980158

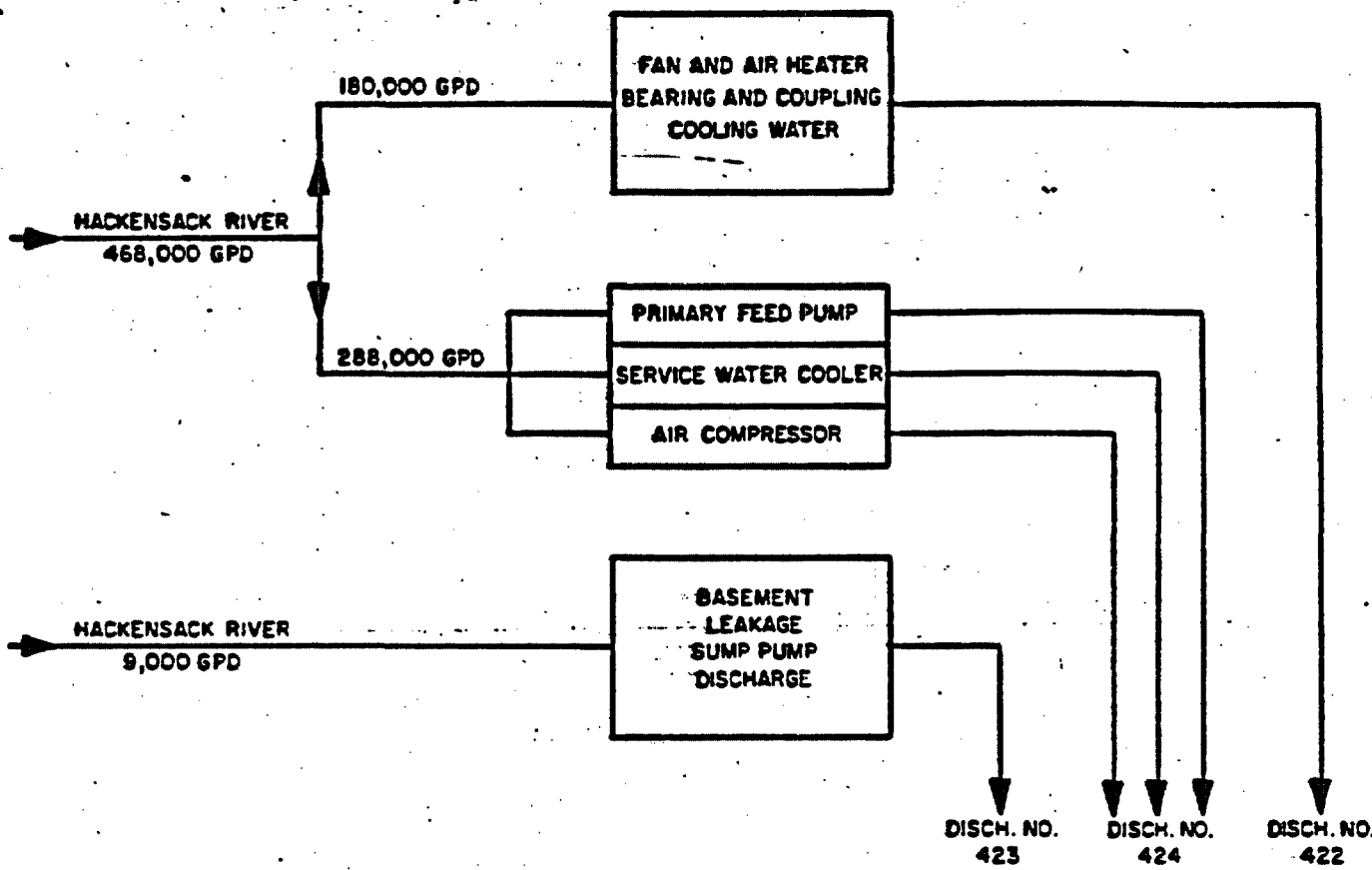

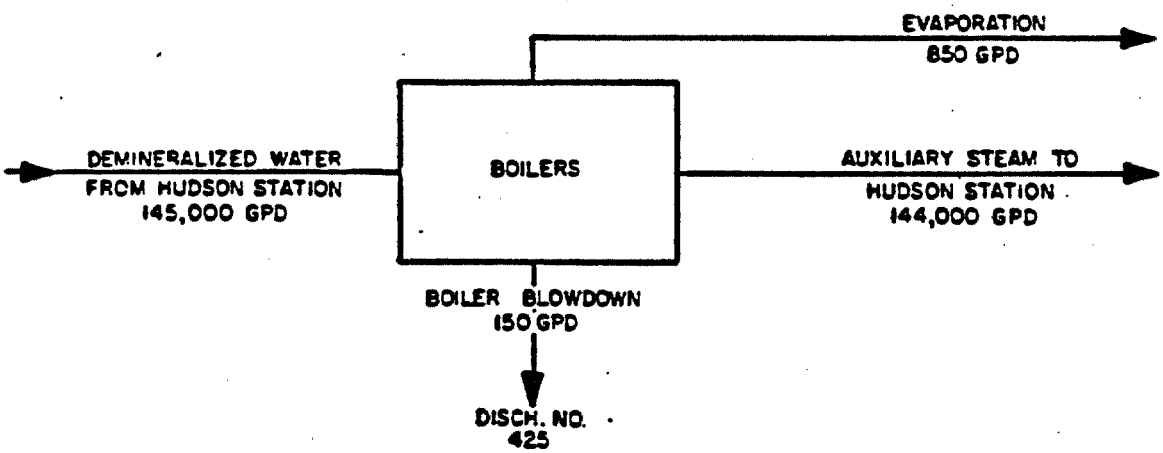

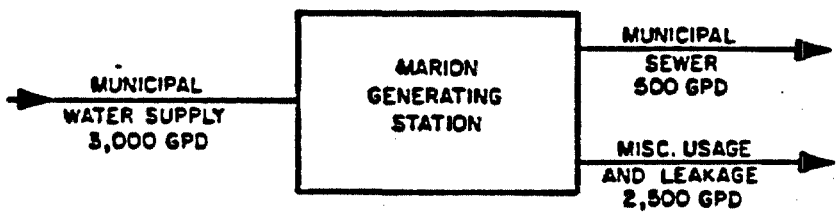

SCHEMATIC OF WATER FLOW
PUBLIC SERVICE ELECTRIC & GAS CO.
MARION GENERATING STATION
JERSEY CITY
COUNTY OF HUDSON
STATE OF NEW JERSEY

MAY 7, 1979 PAGE 1 of 1

920980159

STATEMENT OF BASIS
DRAFT NJPDES PERMIT TO
DISCHARGE INTO THE WATERS OF
THE STATE OF NEW JERSEY

NJPDES Application No. NJ0000647

DESCRIPTION OF LIMITATIONS AND CONDITIONS

DISCHARGE 361 ——ONCE THROUGH COOLING WATER

The effluent limitations for maximum temperature difference and net heat addition remain the same as in the existing permit pending a Section 316(a) determination by NJDEP. The effluent temperature limitation is the maximum value indicated by the DMR data on record from 1976 through 1985.

The total residual chlorine (TRC) limitation is applied in accordance with 40 CFR Part 423 - Effluent Limitations Guidelines for the Steam Electric Power Generating Point Source Category. The limitations for pH are requirements of the Hackensack Meadowlands Development Commission (HMDC), per N.J.A.C. 19:4-6.14(g).

For the non-contact cooling water, we have determined to require the submittal of a monitoring program from all of the power utility companies. Upon review of the monitoring programs, DEP intends to decide on what monitoring will be required. A study conducted by U.S.EPA on non-contact cooling water for steam electric power plants indicates that non-contact cooling water may contain small concentrations of a number of toxic and oxygen demanding substances, including heavy metals and organic compounds.

Considering the large quantity of non-contact cooling water produced by power plants we are concerned that large mass amounts of these pollutants may be discharged to surface waters of the State. Therefore, a condition will be included in the final permit requiring PSE&G to develop a scientific program to evaluate these concerns. This program shall include; a statistical experimental design, a suitable choice of pollutant parameters, an appropriate analytical method and a statistical analysis of the results.

920980160

INTAKE STRUCTURES

The permit requires the permittee to install and operate "fish buckets" (or alternative facilities) to reduce the adverse environmental impact of the intake. The basis for this requirement is discussed in a report titled "BASIS and BACKGROUND, Facility Modification to Protect Aquatic Organisms at Water Intakes", dated May, 1986 by Richard R. Delgado and Ann E. Hauck. This report is incorporated into the Fact Sheet and Statement of Basis as Appendix A.

WTP - LOW VOLUME WASTES AND METAL CLEANING WASTES

The limitations for TSS remain the same as in the existing permit and are consistent with the EPA effluent guidelines. The zinc and nickel limitations are BPJ based upon treatability and available data. The limitations for copper and iron are based upon the EPA effluent guidelines. The petroleum hydrocarbon limitations are in accordance with N.J.A.C. 7:14A-14.1 et seq. The toxicity limitation is imposed in accordance with N.J.A.C. 7:9-5.7. The limitation for chemical oxygen demand is BPJ consistent with limitations imposed on other industrial wastewater dischargers and treatability.

DISCHARGES 361R and 361P - ASH POND OVERFLOWS

The limitations for pH and TSS are in accordance with the effluent guidelines for fly ash and bottom ash transport water. The Petroleum hydrocarbon limitations are applied in accordance with the New Jersey Oil and Grease Effluent Limitations, N.J.A.C. 7:14A-14.1 et seq. Monitoring for the metals is necessary to characterize these waste streams. Limitations may be imposed for these parameters, or current monitoring requirements deleted, based upon this monitoring data. The COD limitation is based upon BPJ.

DISCHARGES 363, 364, 365, 366, 367, 368, 422, and 424 - NON-CONTACT COOLING WATER

The pH and temperature limitations are HMDC requirements. The TRC limitation is in accordance with EPA Effluent guidelines and is consistent with Department policy for chlorinated discharges to tidal waters. The non-contact cooling water monitoring program is imposed for these outfalls for the reasons stated under the basis for the DSN 361 limitations.

920980161

DISCHARGE 361G - STORM WATER RUNOFF

Limitations for pH and COD are based on Best Professional Judgment using EPA Region II Guidance for storm water discharges. The petroleum hydrocarbon limitation is based on the New Jersey Oil and Grease Effluent Limitations, N.J.A.C. 7:14A-14.1 et seq. The TSS limitation is based on HMDC Water Quality Regulations pursuant to N.J.A.C. 9:6.14 et seq.

DISCHARGES 369 and 423 - COOLING WATER AND GROUND WATER

The pH, temperature, and TSS limits are HMDC requirements. The petroleum hydrocarbon limitations are State requirements. The COD limitation is based upon BPJ.

DISCHARGES 370 and 425 - BOILER BLOWDOWN

The limits for pH, temperature, phosphorus, and maximum TSS are HMDC requirements. The average TSS limitation is based upon the effluent guidelines for low volume wastes. The limitations for petroleum hydrocarbons are in accordance with N.J.A.C. 7:14A-14.1 et seq. The limitation for COD is based upon BPJ.

BMP REQUIREMENT

The permittee is required to develop and implement a Best Management Practices (BMP) Plan, in accordance with N.J.A.C. 7:14A-3.13(a)11, to help prevent, or minimize, the potential for the release of toxic substances from ancillary activities to the Hackensack River through plant site runoff, spillage or leaks, sludge or waste disposal or drainage from raw material storage and transfer areas.

920980163

PERMIT SUMMARY TABLE

Company: PSE&G - Hudson Generating Station

Permit#: NJ0000647

DISCHARGE #: 361 - Main Circulating Water (Once through cooling water)

Lat: 40° 45' 07"

Long: 74° 04' 38"

Ave. Flow: 892.8 MGD

Max. Flow: 892.8 MGD

Parameter	Application (7/30/79)	Files DMR data (3/76 - 7/83)	Existing Permit Condition	HMDC Limits	Technology Based Limits*	Draft Permit Limits
Flow - MGD	Ave. 892.8 Max. 892.8	Max. 892.8	N/A			N/A
pH - SU	6.4 - 7.9	6.8 - 7.8	6.0 - 9.0**	6.5 - 8.5		6.5 - 8.5
Max Temp - °C(°F)	W 30.6(87) S 36.7(98)	41.1(106)	54.2(129.6)	29.4(85)		41.1(106)
Max Δ Temp - °C(°F)	W 12.2(22) S 15.6(28)	22.2(40)	20.3(36.5)			20.3(36.5)
Net Heat Addition - BTU/hr	11.315×10^9 (6/30/82 request)	11.786×10^9	4.36×10^9			4.36×10^9
COD - mg/l						Reserved
T. Residual Chlorine-mg/l					Max. 0.2	Max. 0.2
Suspended Solids-mg/l				Max. 40		Reserved
Petroleum Hydrocarbons mg/l			Ave. 15 Max. 20	Max. 20		Reserved

* 40 CFR Part 423 - Effluent Limitations Guidelines for the Steam Electric Power Generating Point Source Category.
** at the confluence of the discharge canal and the Hackensack River.

PERMIT SUMMARY TABLE

Company: PSE&G - Hudson Generating Station
Permit#: NJ0000647
Discharge#: 361G
Untreated storm water

Lat: 40 45' 07"
Ave. Flow: 0.38MGD

Long: 74 04' 38"
Max. Flow: N/A

Parameter	DMR Files	Existing Permit Limits	HMDC Limits	NJ Reqs	EPA Guidance	Draft Permit Limits
Flow (MGD)						Monitor
pH (SU)			6.5-8.5			6.0-9.0
Petroleum Hydrocarbons (mg/l)			Max 20	Ave 10 Max 15	Max 15	Max 15
Chemical Oxygen Demand (mg/l)					Max 100	Max 100
Total Suspended Solids (mg/l)			Max 40		Max 50	Max 40

920980165

PERMIT SUMMARY TABLE

Company: PSE&G - Hudson Generating Station

Permit#: NJ0000647

DISCHARGE #: WTP
361-A Low Volume Wastes
361-B Metal Cleaning Waste

Lat: 40° 45' 00"

Long: 74° 04' 25"

Ave. Flow: 0.26 MGD - 361A
0.8 MGD - 361B

Max. Flow: 1.89 MGD
1.0 (intermittent)

Parameter	Application* (7/30/79)	Files DMR data (11/82 - 7/83)	Existing Permit Condition	NJ Standards	Technology Based Limits	Draft Permit Limits
Flow - MGD	Max. 2.89	Max. 1.46	N/A			N/A
Max Temp - °C(°F)	W (65) S (90)					
pH - SU	6.0 - 9.0		6.0 -9.0		6.0 - 9.0	
Suspended Solids-mg/l	Ave. 20 Max. 100	Max. 101.6	Ave. 30 Max. 100		Ave. 30 Max. 100	Ave. 30 Max. 100
Oil & Grease - mg/l	Ave. 8 Max. 20	Max. 11.78	Ave. 15 Max. 20	Ave. 10 Max. 15	Ave. 15 Max. 20	
Petroleum Hydrocarbon- mg/l		Max. 6.7	N/A			Ave. 10 Max. 15
Ammonia - mg/l	Ave. 0.05 Max. 0.20					
Chromium - mg/l	Ave. 0.1 Max. 0.2					

* estimated data

PERMIT SUMMARY TABLE (continued)

PSE&G - Hudson Generating Station NJ0000647 Discharge # WTP - 361A and B

920980166

Parameter		Application (7/30/79) 361A	361B	Files DMR data (11/82 - 7/83)	Existing Permit Condition	BPJ	Technology Based Limits**	Draft Permit Limits
Copper - mg/l	Ave.	0.1	0.2				Ave. 1.0	
	Max.	1.0	1.0	Max. .17	Max. 1.0		Max. 1.0	Max. 1.0
Iron - mg/l	Ave.	0.6	0.8				Ave. 1.0	
	Max.	1.0	1.0	Max. 1.19	Max. 1.0		Max. 1.0	Max. 1.0
Nickel - mg/l	Ave.	1.0	1.0					
	Max.	4.0	4.0	Max. 0.1	Max. 4.0	Max. 1.0	Max. 1.0	Max. 1.0
Zinc -	Ave.	2.0	2.0					
	Max.	3.0	3.0	Max. .15	Max. 3.0	Max. 1.0		Max. 1.0
COD - mg/l						Max. 100		Max. 100
Toxicity- Bioassay								96 hr LC50≥50% (by volume)

920980167

PERMIT SUMMARY TABLE

Company: PSE&G - Hudson Generating Station

Permit#: NJ0000647

DISCHARGE #:
361R(362) - Old Ash Pond Overflow
361P - New Ash Pond Overflow

Lat: 40° 45' 07"

Ave. Flow: MGD
5.2; 2.3

Long: 74° 04' 36"

Max. Flow: MGD
6.2; 9.4

Parameter		Application * 362	Application * 361P	Files (7/83) 361R	Files (7/83) 361P	Existing Permit Condition	NJ Standards	Technology Based Limits	Net Limits
Flow - MGD	Ave.	5.2	2.3			N/A			N/A
	Max.	6.2	9.4	Max 2.2	5.27				
Max. Temp. - °C(°F)	W	(42)							
	S	(85)							
pH - SU		6.0-7.74						6.0 - 9.0	6.0-9.0
Suspended Solids - mg/l(kg/d)	Ave.	16				Ave. (592)		Ave. 30	Ave. 30
	Max.	60		Max. 8.7	13.4	Max. (2160)		Max. 100	Max. 100
Petroleum Hydrocarbons mg/l							Ave. 10 Max. 15	Ave. 15 Max. 20	Ave. 10 Max. 15
COD (mg/l)									Max. 100
Copper - mg/l	Ave.	.030							N/A
	Max.	.061							
Nickel - mg/l	Ave.	.030							N/A
	Max.	.034							
Zinc - mg/l	Ave.	.10							N/A
	Max.	.30							
Selenium - mg/l	Ave.	.010							N/A
	Max.	.018							

* estimated data

PERMIT SUMMARY TABLE (continued)

PSE&G - Hudson Generating Station NJ0000647 Discharges 361R, 361P

Parameter	Application 362	Application 361P	Files 361R	Files 361P	Existing Permit Condition	Technology Based Limits	Net Limits
Arsenic - mg/l	Ave. .02 Max. .052						N/A
Cadmium - mg/l	Ave. .003 Max. .004						N/A
Chromium - mg/l	Ave. .003 Max. .015						N/A
Lead - mg/l	Ave. .02 Max. .06						N/A
Mercury - mg/l	Ave. .0007 Max. .002						N/A

920980168

PERMIT SUMMARY TABLE

Company: PSE&G - Hudson Generating Station

Permit#: NJ0000647

DISCHARGE #:
363 - Gas Turbine Cooling Water
(Noncontact cooling water)

Lat: 40° 44' 58"

Ave. Flow: MGD
0.09

Long: 74° 04' 29"

Max. Flow: MGD
1.58 (Intermittent)

Parameter	Application * (7/30/79)	Files	Existing Permit Condition	HMDC Limits	NJ Standards	Draft Permit Limits
Flow - MGD	Ave. 9.96 Max. 11.62					N/A
Max. Temp. - °C(°F)	W 11.1(52) S 32.8(91)			29.4(85)		29.4(85)
pH - SU	6.4 - 7.9			6.5 - 8.5		6.5 - 8.5
Petroleum Hydrocarbons mg/l				Max. 20	Ave. 10 Max. 15	Reserved
Free available chlorine-mg/l	Present					
Total residual chlorine-mg/l						Max. 0.2
Suspended Solids - mg/l				Max. 40		Reserved
COD - mg/l						Reserved

* estimated data

920980169

920980170

PERMIT SUMMARY TABLE

Company: PSE&G - Hudson Generating Station

Permit#: NJ0000647

DISCHARGE #:
364 - Miscellaneous Noncontact Cooling Water

Lat: 40° 44' 58"

Ave. Flow: 0.01 MGD

Long: 74° 04' 29"

Max. Flow: 0.02 MGD

Parameter	Application* (7/30/79)	Files	Existing Permit Condition	HMDC Limits	NJ Standards	Draft Permit Limits
Flow - MGD	Ave. 0.01 Max. 0.02					N/A
Max. Temp. - °C(°F)	W (51) S (87)			29.4(85)		29.4(85)
pH - SU				6.5 - 8.5		6.5 - 8.5
Suspended Solids-mg/l				Max. 40		Reserved
Petroleum Hydrocarbons-mg/l	Ave. 4.0 Max. 10.0			Max. 20	Ave. 10 Max. 15	Reserved
Free Available Chlorine - mg/l	Ave. 0 Max. 0.2					
Total Residual Chlorine - mg/l						Max. 0.2
COD - mg/l						Reserved

* estimated data

920980171

PERMIT SUMMARY TABLE

Company: PSE&G - Hudson Generating Station

Permit#: NJ0000647

DISCHARGE #:
365 - Unit #1 (Auxiliary Non-
366 - Unit #2 contact cooling
water)

Lat: 40° 44' 52"

Ave. Flow: MGD - 9.33; 0.54

Long: 74° 04' 26"

Max. Flow: MGD - 10.0; 0.70

Parameter	Application* 365	Application* 366	Files 366 (11/82-7/83)	Existing Permit Condition (366 only)	HMDC Limits	NJ Standards	Draft Permit Limits
Flow - MGD	A 9.33 M 10.0	A 0.54 M 0.70	Max. .52	N/A			N/A
Max. Temp. - °C(°F)	W(51) S(87)	W(51) S(87)			29.4(85)		29.4(85)
pH - SU	NA	6.4-7.9			6.5 - 8.5		6.5 - 8.5
Suspended Solids - mg/l	NA	A 1 M 9	Max. 25(49 kg/d)	Ave. 865 kg/d (NET)	Max. 40		Reserved
Oil and Grease - mg/l	A 4.0 M 10.0	NA			Max. 20	Ave. 10 Max. 15	
Free Available Chlorine - mg/l	A 0 M 0.2	A 0 M 0.2					
COD - mg/l							Reserved
TRC - mg/l							Max 0.2
Petroleum Hydrocarbons mg/l						Ave. 10 Max 15	Reserved

* estimated data

920980172

PERMIT SUMMARY TABLE

Company: PSE&G - Hudson Generating Station

Permit#: NJ0000647

DISCHARGE #:
367 - Bearing Cooling Water
368 - Miscellaneous Noncontact cooling water

Lat: 40° 44' 45"

Ave. Flow: MGD - 0.18; 0.28

Long: 74° 04' 28"

Max. Flow: MGD - 0.18; 0.28

Parameter	Application* 367	Application* 368	Files	Existing Permit Condition	HMDC Limits	NJ Standards	Draft Permit Limits
Flow - MGD	0.18	0.28					NA
Max. Temp. - °C(°F)	W (60) S (106)	W (60) S (106)			29.4(85)		29.4(85)
pH - SU	6.5 - 7.8	6.5 - 7.8			6.5 - 8.5		6.5 - 8.5
Suspended Solids - mg/l	A 18 M 68				Max. 40		Reserved
Petroleum Hydrocarbons mg/l					Max. 20	Ave. 10 Max. 15	Reserved
COD - mg/l							Reserved

* estimated data

920980173

PERMIT SUMMARY TABLE

Company: PSE&G - Hudson Generating Station

Permit#: NJ0000647

DISCHARGE #:
369 - Sump Pump (cooling water and ground water infiltration)

Lat: 40° 44' 45"

Ave. Flow: 0.02 MGD

Long: 74° 04' 28"

Max. Flow: 0.08 MGD (intermittent)

Parameter	Application* (7/30/79)	Files	Existing Permit Condition	HMDC Limits	NJ Standards	Draft Permit Limits
Flow - MGD	Ave. 0.02 Max. 0.08					NA
Max. Temp. - °C(°F)	W (45) S (89)			29.4(85)		29.4(85)
pH - SU	6.5 - 7.8			6.5 - 8.5		6.5 - 8.5
Suspended Solids - mg/l	Ave. 30 Max. 100			Max. 40		Max. 40
Petroleum Hydrocarbon - mg/l	Ave. 15 Max. 20			Max. 20	Ave. 10 Max. 15	Ave. 10 Max. 15
COD - mg/l						Max. 50

* estimated data

PERMIT SUMMARY TABLE

Company: PSE&G - Hudson Generating Station

Permit#: NJ0000647

DISCHARGE #:
370 - Boiler blowdown
(Low volume waste)

Lat: 40° 44' 45"

Ave. Flow: 0.00015 MGD

Long: 74° 04' 28"

Max. Flow: 0.00015 MGD (intermittent)

Parameter	Application* (7/30/79)	Files	Existing Permit Condition	HMDC Limits	Technology Based Limits	Draft Permit Limits
Flow - MGD	Max. 0.0015					NA
Max. Temp. - °C(°F)	W (180) S (180)			29.4(85)		29.4(85)
pH - SU	9.0 - 10.0			6.5 - 8.5	6.0 - 9.0	6.5 - 8.5
Phosphorus (PO_4) - mg/l	Ave. 1.6 Max. 10.0			Max. 30		Max. 30
Sodium - mg/l	Ave. 3.6 Max. 22.0					
Suspended Solids - mg/l				Max. 40	Ave. 30 Max. 100	Ave. 30 Max. 40
Petroleum Hydrocarbon - mg/l				Max. 20	Ave. 15 Max. 20	Ave. 10** Max. 15**
COD - mg/l						Max. 100

WQM68-C/T:1ml

* estimated data

** NJAC 7:14A-14.1 et seq.

920980174

9209080175

PERMIT SUMMARY TABLE

Company: PSE&G - Marion Generating Station

Permit#: NJ0000647

DISCHARGE #: 422 and 424 - Noncontact Cooling Water

Lat: 40° 44' 43" / 40° 44' 41"

Ave. Flow: 0.180 MGD/0.288 MGD

Long: 74° 04' 29" / 74° 04' 32"

Max. Flow:

Parameter	5/9/79 Application* 422	424	Files	Existing Permit Condition	HMDC Limits	NJ Standards	Draft Permit Limits
Flow-MGD	A 0.180	A 0.288					N/A
Max. Temp-°C(°F)	W(60) S(106)	W(60) S(106)			29.4(85)		29.4(85)
pH-SU	6.5-7.8	6.5-7.8			6.5-8.5		6.5-8.5
Suspended Solids-mg/l	A 18 M 95	A 18 M 95			Max 40		Reserved
Petroleum Hydrocarbons-mg/l					Max 20	Ave 10 Max 15	Reserved
COD-mg/l	A 185 M 500	A 185 M 500					Reserved
BOD_5-mg/l	A 4 M 12	A 4 M 12			Max 25	Max 40	

*estimated data

920980176

PERMIT SUMMARY TABLE

Company: PSE&G - Marion Generating Station | Permit#: NJ0000647 | DISCHARGE #: 423 - Sump Pump

Lat: 40° 44' 43" | Ave. Flow: 0.009 MGD

Long: 74° 04' 29" | Max. Flow: 0.055 MGD

Parameter	5/9/79 Application* Files	Existing Permit Condition	HMDC Limits	NJ Standards	Draft Permit Limits
Flow-MGD	A 0.009 M 0.055				N/A
Max. Temp-°C(°F)	W (45) S (89)		29.4 (85)		29.4 (85)
pH-SU	6.5-7.8		6.5-8.5		6.5-8.5
Suspended Solids-mg/l	A 30 M 100		Max 40		Max 40
Petroleum Hydrocarbons mg/l	A 15 M 20		Max 20	Ave 10 Max 15	Ave 10 Max 15
COD-mg/l	A 185 M 500				Max. 50
BOD-mg/l	A 4 M 12		Max 25	Max 40	

*estimated data

920980177

PERMIT SUMMARY TABLE

Company: PSE&G - Marion Generating Station

Permit#: NJ0000647

DISCHARGE #: 425 - Boiler Blowdown (low volume waste)

Lat: 40° 44' 41"

Ave. Flow: 0.00015 MGD

Long: 74° 04' 32"

Max. Flow: 0.00030 MGD (intermittent)

Parameter	5/9/79 Application*	Files	Existing Permit Condition	HMDC Limits	Technology Based Limits	Draft Permit Limits
Flow-MGD	A 0.00015 M 0.00030					N/A
Max Temp-°C(°F)	(200)			29.4 (85)		29.4 (85)
pH-SU	9.5-10.0			6.5-8.5		6.5-8.5
Suspended Solids-mg/l	A 5 M 10			Max 40	Ave 30 Max 100	Ave 30 Max 40
Petroleum Hydrocarbon -mg/l				Max 20	Ave 15 Max 20	Ave 10** Max 15**
COD-mg/l	A 10 M 30					Max 50
BOD-mg/l	A 1 M 1			Max 25		
Phosphorus-mg/l	A 1.6 M 10			Max 30		Max 30
Sodium-mg/l	A 3.6 M 22					

*estimated data

**NJAC 7:14A-14.1 et seq.

CHECKLIST OF PARTS AND MODULES COMPRISING THIS NJPDES PERMIT

1. Cover Page
2. Checklist
3. Part I (General Conditions for All NJPDES Discharge Permits)
4. Part II - Additional General Conditions for the types of NJPDES Permits checked as follows:

   ____ Part II - A (Municipal/Sanitary)
   ✓ Part II - B/C (Industrial/Commercial/Thermal)
   ____ Part II - L (SIU)
   ____ Part II - IWMF (Industrial Waste Management Facility)
   ____ Part II - DGW Specify type(s):_____

5. Part III - Effluent Limitations and Monitoring Requirements

   ____ Part III - A
   ✓ Part III - B/C
   ____ Part III - L
   ____ Part III - DGW Specify type(s):_____

6. Part IV - Special Conditions

   ____ Part IV - A
   ✓ Part IV - B/C
   ____ Part IV - L
   ____ Part IV - IWMF
   ____ Part IV - DGW Specify type(s):_____

920980178

Let's protect our earth

STATE OF NEW JERSEY
DEPARTMENT OF ENVIRONMENTAL PROTECTION
CN 402
Trenton, N.J. 08625

PERMIT

The New Jersey Department of Environmental Protection grants this permit in accordance with your application, attachment accompanying same application, and applicable laws and regulations. This permit is also subject to the further condition and stipulations enumerated in the supporting documents which are agreed to by the permittee upon acceptance of the permit

Permit No.	Issuance Date	Effective Date	Expiration Date
NJ0000647			

Name and Address of Applicant	Location of Activity/Facility	Name and Address of Owner
Public Service Electric and Gas Company 80 Park Place Newark, N.J. 07101	Hudson and Marion Generating Stations Duffield & Van Keuren Ave. Jersey City, Hudson Co., N.J.	Same as applicant

Issuing Division	Type of Permit	Statute(s)	Application No.
Water Resources	NJPDES/DSW	N.J.S.A. 58:10A-1 et seq	NJ0000647

This permit grants permission to:

Discharge to the Hackensack River, classified as SE3 waters, in accordance with the effluent limitations, monitoring requirements, and other conditions set forth in Parts I, II, III, and IV hereof.

This NJPDES/DSW permit should not be construed to include the NJPDES/Discharge to Ground Water (DGW) permit required in accordance with N.J.A.C. 7:14A-1 et seq. Also, this permit does not constitute a waiver from obtaining a NJPDES/DGW permit as per Section 10.7 of the NJPDES regulations. The Department reserves the right to modify this NJPDES/DSW permit at any time to include a DGW permit section.

Approved by the Department of Environmental Protection
By the Authority of:

John W. Gaston Jr., P.E.
Director
Division of Water Resources

Arnold Schiffman, Administrator
Water Quality Management

DATE

...d permit means "approval, certification, registration, etc."

(GENERAL CONDITIONS ARE ON THE REVERSE SIDE.)

920980179

1.A. EFFLUENT LIMITATIONS AND MONITORING REQUIREMENTS

During the period beginning EDP and lasting through EDP + 3 years the permittee is authorized to discharge from outfall(s) serial number(s):361, main once-through non-contact cooling water.

There shall be no discharge of floating solids or visible foam in other than trace amounts.

Samples taken in compliance with the specified monitoring requirements shall be taken at the following location(s): at the outfall of DSN(s) 361; and shall be reported monthly.

EFFLUENT CHARACTERISTIC	DISCHARGE LIMITATIONS			MONITORING REQUIREMENTS	
	Minimum	Average	Maximum	Frequency	Sample type
Flow-m3/Day (MGD)	N/A	N/A	N/A	Continuous	Calculated
Temperature (1)	N/A	N/A	41.1 ^{o}C(106 ^{o}F)	Continuous	N/A
Net Temperature Difference (1)	N/A	N/A	20.3^{o}C(36.5^{o}F)	Daily	Calculated
Net Heat Addition (1)	N/A	N/A	4.36 x 10^{9}BTU/h	Daily	Calculated
Petroleum Hydrocarbons	Reserved, See Part IV, 1.F.				
pH-standard units	6.5	N/A	8.5	Daily	Grab
Chemical Oxygen Demand	Reserved, See Part IV, 1.F.				
Total Suspended Solids	Reserved, See Part IV, 1. F.				
Total Residual Chlorine	N/A	N/A	0.2 mg/1	Daily (2)	Grab

(1) See Part IV - B/C, 1. I.

(2) Samples shall be taken once during each 2-hour period of chlorination. See Part IV - B/C, 1.E.

9209801 80

1. B. EFFLUENT LIMITATIONS AND MONITORING REQUIREMENTS

During the period beginning EDP and lasting through EDP + 3 years the permittee is authorized to discharge from outfall(s) serial number(s): 361G, storm water runoff.

There shall be no discharge of floating solids or visible foam in other than trace amounts.

Samples taken in compliance with the specified monitoring requirements shall be taken at the following location(s): at the outfall of DSN(s) 361G; and shall be reported monthly.

EFFLUENT CHARACTERISTIC	DISCHARGE LIMITATIONS			MONITORING REQUIREMENTS	
	Minimum	Average	Maximum	Frequency (1)	Sample type
Flow (MGD)	N/A	N/A	N/A	Monthly	Grab
pH Range (S.U.)	6.0	N/A	9.0	Quarterly	Grab
Petroleum Hydrocarbons (mg/1)	N/A	N/A	15 (2)	Monthly	M. Grab (3)
Chemical Oxygen Demand (mg/1)	N/A	N/A	100 (4)	Quarterly	Grab
Total Suspended Solids (mg/1)	N/A	N/A	40	Quarterly	Grab

(1) During the first precipitation event of the month which causes a discharge during working hours and which is preceded by a minimum dry period of 72 hours.

(2) And no visible sheen.

(3) The permittee shall take samples 15, 30 and 45 minutes after the onset of the discharge. The permittee shall analyze each sample individually and report a maximum value for the samples.

(4) Upon written request from the permittee this limit may be changed to 50mg/1 of TOC.

920980181

1.C. EFFLUENT LIMITATIONS AND MONITORING REQUIREMENTS

During the period beginning EDP and lasting through EDP + 3 years the permittee is authorized to discharge from outfall(s) serial number(s):WTP, treated process wastewater

There shall be no discharge of floating solids or visible foam in other than trace amounts.

Samples taken in compliance with the specified monitoring requirements shall be taken at the following location(s): at the outfall of DSN(s) WTP; and shall be reported monthly.

EFFLUENT CHARACTERISTIC	DISCHARGE LIMITATIONS			MONITORING REQUIREMENTS	
	Minimum	Average	Maximum	Frequency	Sample type
Flow-m3/Day (MGD)	N/A	N/A	N/A	Continuous	N/A
Chemical Oxygen Demand	N/A	N/A	100 mg/1	2/Month	Composite
Petroleum Hydrocarbons No	Visible Sheen	10 mg/1	15 mg/1	2/Month	Grab
Total Suspended Solids	N/A	30 mg/1	100 mg/1	2/Month	Composite
Copper	N/A	N/A	1.0 mg/1	Monthly	Composite
Iron	N/A	N/A	1.0 mg/1	Monthly	Composite
Toxicity(Bioassay)-96hr.LC50 $\geq$	50% (by volume)	N/A	N/A	Quarterly	(1)
Nickel	N/A	N/A	1.0 mg/1	Monthly	Composite
Zinc	N/A	N/A	1.0 mg/1	Monthly	Composite

(1) See Part IV - B/C, 2.

920980182

1.D. EFFLUENT LIMITATIONS AND MONITORING REQUIREMENTS

During the period beginning EDP and lasting through EDP + 3 years the permittee is authorized to discharge from outfall(s) serial number(s):361R & 361P

There shall be no discharge of floating solids or visible foam in other than trace amounts.

Samples taken in compliance with the specified monitoring requirements shall be taken at the following location(s): at the outfall of DSN(s) 361R & 361P; and shall be reported monthly.

EFFLUENT CHARACTERISTIC	DISCHARGE LIMITATIONS			MONITORING REQUIREMENTS	
	Minimum	Average	Maximum	Frequency	Sample type
Flow-m3/Day (MGD)	N/A	N/A	N/A	Weekly	Calculated
Petroleum Hydrocarbons	No Visible Sheen	10 mg/l	15 mg/l	Weekly	Grab
pH-standard units	6.0	N/A	9.0	2/Month	Grab
Total Suspended Solids	N/A	30 mg/l	100 mg/l	2/Month	Composite
Chemical Oxygen Demand	N/A	N/A	100 mg/l	2/Month	Composite
Arsenic-mg/l	N/A	N/A	N/A	Monthly	Composite
Cadmium-mg/l	N/A	N/A	N/A	Monthly	Composite
Chromium-mg/l	N/A	N/A	N/A	Monthly	Composite
Copper-mg/l	N/A	N/A	N/A	Monthly	Composite
Lead-mg/l	N/A	N/A	N/A	Monthly	Composite
Mercury-mg/l	N/A	N/A	N/A	Monthly	Composite
Nickel-mg/l	N/A	N/A	N/A	Monthly	Composite
Selenium-mg/l	N/A	N/A	N/A	Monthly	Composite
Zinc-mg/l	N/A	N/A	N/A	Monthly	Composite

920980183

1. E. EFFLUENT LIMITATIONS AND MONITORING REQUIREMENTS

During the period beginning EDP and lasting through EDP + 3 years the permittee is authorized to discharge from outfall(s) serial number(s):363, 364, 366, 367, 368, 422, and 424, NCC.

There shall be no discharge of floating solids or visible foam in other than trace amounts.

Samples taken in compliance with the specified monitoring requirements shall be taken at the following location(s): at the outfall of DSN(s) 363, 364, 366, 367, 368, 422, and 424; and shall be reported monthly.

EFFLUENT CHARACTERISTIC	DISCHARGE LIMITATIONS			MONITORING REQUIREMENTS	
	Minimum	Average	Maximum	Frequency	Sample type
Flow-m3/Day (MGD)	N/A	N/A	N/A	Monthly	Grab
Chemical Oxygen Demand	Reserved, See Part IV, 1.F.				
Petroleum Hydrocarbons	Reserved, See Part IV, 1.F.				
pH-standard units	6.5	N/A	8.5	Quarterly	Grab
Temperature	N/A	N/A	29.4°C(85°F)	Monthly	Grab
Total Residual Chlorine*	N/A	N/A	0.2 mg/1	Monthly	Grab
Total Suspended Solids	Reserved, See Part IV, 1.F.				

*363, 364 and 366 only.

920980184

1. F. EFFLUENT LIMITATIONS AND MONITORING REQUIREMENTS

During the period beginning EDP and lasting through EDP + 3 years the permittee is authorized to discharge from outfall(s) serial number(s):365, Non-contact cooling water (NCC)

There shall be no discharge of floating solids or visible foam in other than trace amounts.

Samples taken in compliance with the specified monitoring requirements shall be taken at the following location(s): at the outfall of DSN(s) 365; and shall be reported monthly.

EFFLUENT CHARACTERISTIC	DISCHARGE LIMITATIONS			MONITORING REQUIREMENTS	
	Minimum	Average	Maximum	Frequency	Sample type
Flow-m3/Day (MGD)	N/A	N/A	N/A	Monthly	Grab
Chemical Oxygen Demand	Reserved, See Part IV, 1.F.				
Petroleum Hydrocarbons	Reserved, See Part IV, 1.F.				
pH-standard units	6.5	N/A	8.5	Monthly	Grab
Temperature	N/A	N/A	29.4°C (85°F)	Monthly	Grab
Total Residual Chlorine	N/A	N/A	0.2 mg/l	Weekly	Grab
Total Suspended Solids	Reserved, See Part IV, 1.F.				

920980185

1.G. EFFLUENT LIMITATIONS AND MONITORING REQUIREMENTS

During the period beginning EDP and lasting through EDP + 3 years the permittee is authorized to discharge from outfall(s) serial number(s):369 and 423.

There shall be no discharge of floating solids or visible foam in other than trace amounts.

Samples taken in compliance with the specified monitoring requirements shall be taken at the following location(s): at the outfall of DSN(s) 369 and 423: and shall be reported monthly.

EFFLUENT CHARACTERISTIC	DISCHARGE LIMITATIONS			MONITORING REQUIREMEN	
	Minimum	Average	Maximum	Frequency	Sample type
Flow-m3/Day (MGD)	N/A	N/A	N/A	Monthly	Grab
Chemical Oxygen Demand	N/A	N/A	50 mg/1	Quarterly	Grab
Petroleum Hydrocarbons	No Visible Sheen	10 mg/1	15 mg/1	Monthly	Grab
pH-standard units	6.5	N/A	8.5	Quarterly	Grab
Temperature	N/A	N/A	29.4°C (85°F)	Quarterly	Grab
Total Suspended Solids	N/A	N/A	40 mg/1	Quarterly	Grab

920980186

1.H. EFFLUENT LIMITATIONS AND MONITORING REQUIREMENTS

During the period beginning EDP and lasting through EDP + 3 years the permittee is authorized to discharge from outfall(s) serial number(s):370 and 425.

There shall be no discharge of floating solids or visible foam in other than trace amounts.

Samples taken in compliance with the specified monitoring requirements shall be taken at the following location(s): at the outfall of DSN(s) 370 and 425; and shall be reported monthly.

EFFLUENT CHARACTERISTIC	DISCHARGE LIMITATIONS			MONITORING REQUIREMENTS	
	Minimum	Average	Maximum	Frequency	Sample type
Flow-m3/Day (MGD)	N/A	N/A	N/A	Monthly	Grab
Chemical Oxygen Demand	N/A	N/A	100 mg/l	Quarterly	Composite
Petroleum Hydrocarbons	No Visible Sheen	10 mg/l	15 mg/l	Monthly	Grab
pH-standard units	6.5	N/A	8.5	Quarterly	Grab
Temperature	N/A	N/A	29.4°C (85°F)	Monthly	Grab
Total Suspended Solids	N/A	30 mg/l	40 mg/l	Quarterly	Composite
Phosphorus	N/A	N/A	30 mg/l	Quarterly	Grab

92098187

2. SURFACE WATER QUALITY REQUIREMENTS

The permittee shall discharge so as not to violate Surface Water Quality Standards for the Hackensack River, classified as SE3 Waters, pursuant to N.J.A.C. 7:9-4.1 et seq., including, but not limited to, the following:

A. Floating, Colloidal, Color and Settleable Solids; Petroleum Hydrocarbons and Other Oils and Greases

1. None noticeable in the water or deposited along the shore or on the aquatic substrata in quantities detrimental to the natural biota. None which render the waters unsuitable for the designated uses.

2. For "Petroleum Hydrocarbons" the goal is none detectable utilizing the federal EPA-Environmental Monitoring and Support Laboratory-Method (Freon Extractable-Silica Gel Absorption-Infrared Measurement); the present criteria, however, are those of paragraph 1. above.

B. Temperature Deviations

No thermal deviations which would cause temperatures to deviate more than 2.2 degrees Celsius (4 degrees Fahrenheit) from ambient during September through May, or by 0.8°C (1.5°F) during June through August, nor shall temperatures exceed 29.4°C (85°F).

C. Dissolved Oxygen (mg/l)

Not less than 3.0 at any time.

D. Fecal Coliforms (Number per 100 ml)

Not to exceed a geometric average of 1500.

E. pH (Standard Units)

6.5 to 8.5

F. Total Dissolved Solids (Filterable Residue)

None which would render the waters unsuitable for the designated uses.

G. Turbidity (Nephelometric Turbidity Unit - NTU)

Maximum 30-day average of 10 NTU, a maximum of 30 NTU at any time.

H. Suspended Solids (Non-filterable Residue) (mg/l)

None which would render the water unsuitable for designated uses.

I. Ammonia, Un-Ionized, 24 Hour Average

Not to exceed 0.1 of acute definitive LC50 or EC50.

J. Toxic or Hazardous Substances

1. Allowing for natural conditions, none, either alone or in combination with other substances, in such concentrations as to affect humans or be detrimental to the natural aquatic biota, produce undesirable aquatic life, or which would render the waters unsuitable for the designated uses.

2. Toxic substances shall not be present in concentrations that cause acute or chronic toxicity to aquatic biota, or bioaccumulate within an organism to concentrations that exert a toxic effect on that organism or render it unfit for consumption.

3. The concentrations of non-persistent toxic substances in the State's waters shall not exceed 0.05 of the acute definitive LC50 or EC50 value, as determined by appropriate bioassays, nor shall concentrations of persistent toxic substances exceed 0.01 of acute definitive LC50 or EC50 value.

4. Concentrations of the following substances in the State's waters are among those specifically limited:

Substance	Not to exceed (ug/l)
Aldrin/Dieldrin	0.0019
Benzidine	0.1
Chlordane	0.004
Chlorine, Total Residual	10
DDT and Metabolites	0.001
Endosulfan	0.0087
Endrin	0.0023
Heptachlor	0.0036
Lindane	0.004
Polychlorinated Biphenyls (PCB's)	0.03
Toxaphene	0.005

920980189

1. ADDITIONAL REQUIREMENTS OF THIS PERMIT

A. Operation of Treatment Works

The operation of the treatment works shall be under the continual supervision of an operator. The operator shall meet the requirements of the Department of Environmental Protection of the State of New Jersey for N2 or equivalent, pursuant to the provisions of N.J.S.A. 58:11-64 and amendments thereto.

B. In addition to the discharge monitoring report submitted to NJDEP in accordance with paragraph 11.I.(1) in Part I of this permit, the permittee shall also submit a duplicate signed copy of these, and all other reports required herein, to the following address(es):

Regional Administrator
Region II
U.S. Environmental Protection Agency
26 Federal Plaza
New York, N.Y. 10278
ATTN: Permits Administration Branch

C. The permittee shall satisfy the requirements as set forth in the provisions covering the generation, storage, handling, and disposal of sludges and/or hazardous solid wastes in accordance with N.J.A.C. 7:26-1 et seq.

D. There shall be no discharge of polychlorinated biphenyl compounds such as those commonly used for transformer fluid.

E. Total residual chlorine may not be discharged from any single generating unit for more than two hours per day unless the discharger demonstrates to NJDEP that discharge for more than two hours is required for macroinvertebrate control. Simultaneous multi-unit chlorination is permitted.

F. The permittee shall develop a report, acceptable to the Division of Water Resources, on the basis of design of intake structure modifications including "fish buckets" and an appropriate "fish return" system (and/or alternative facilities to attain at least the same degree of protection to fish and other aquatic organisms) for submittal to the Administrator, Water Quality Management Element. Said report shall show how the design of intake structure modifications (including the "fish return" system) at the facility conform to prudent and conservative state of the art design practice for the safe handling and return of aquatic organisms to the environment.

920980190

1. ADDITIONAL REQUIREMENTS OF THIS PERMIT (cont.)

The permittee shall submit complete, appropriate, and acceptable engineering plans for facilities as above to protect fish and other aquatic organisms.

Intake structure modifications including "fish buckets" and an appropriate "fish return" system (and/or facilities approved by the Division of Water Resources as an alternative for the intake) shall be completely and properly installed and shall be operated continuously at all times when water is being drawn into the intake structure.

G. The net amount of heat per unit time is determined by the product of the heat capacity, discharge flow and discharge-intake temperature difference.

H. The permittee shall submit an appropriate monitoring program to NJDEP on or before December 31, 1986 which is designed to inventory the amounts of toxic and oxygen demanding pollutants which may be present in the permittee's discharges of non-contact cooling water. Said program shall demonstrate how a high degree of confidence in the conclusions can be expected, considering factors such as the amounts which may be of environmental concern; the sensitivity of the analytical methods, techniques, and equipment to be utilized; the error normally associated with such testing; the number and frequency of tests to be performed; and the statistical or other techniques to be employed in reaching valid conclusions relating to the amounts of pollutants which may be present in the permittee's discharges of non-contact cooling water. The program shall also contain a justification of all assumptions which are inherent in the program.
The permittee shall also submit a preliminary report on the program plan of study on or before September 30, 1986.

This permit may be modified or revoked and reissued to impose monitoring requirements, effluent limitations, management practices, and/or other requirements relating to pollutants which may be present in the permittee's discharges of non-contact cooling water.

920980191

1. ADDITIONAL REQUIREMENTS OF THIS PERMIT (cont.)

I. Reopener Clause: Thermal Discharge(s)/Cooling Water Intake(s)

The permittee has submitted data and studies (pursuant to Section 316 of the Federal Act) which the permittee(1) claims demonstrate that the thermal discharge(s) do(es) not preclude the protection and propagation of a balanced, indigenous population of shellfish, fish and wildlife in and on the receiving water and (2) claims demonstrates that the existing intake(s) reflect(s) the best technology available for minimizing adverse environmental impact. Continuation of the provisions of this permit relating to thermal discharge(s) and/or intake structure(s) shall be contingent upon 316 determinations favorable to the permittee.

Upon determination(s) as to alternative thermal effluent limitations and/or on the location, design, construction and capacity of the cooling water intake structure(s) pursuant to Section 316(a&b) of the Federal Act; this permit shall be promptly modified or revoked and reissued to impose alternative thermal effluent limitations, to impose thermal effluent limitations based upon load allocations and other factors, to designate appropriate mixing zone(s), and/or to impose intake structure related limitations, as appropriate. A schedule of compliance may be imposed upon the permittee to attain final thermal effluent or other limitations.

The issuance of this permit shall not in any way prejudice the outcome of any determination(s) relative to the review of the permittee's 316 studies.

Note: At the expiration of the permit it shall be the obligation of the permittee to support the issuance and/or continuance of any Section 316 variance which may be necessary to accommodate continued facility operation with studies which include the discharger's actual continued operation during the term of this permit and which demonstrate that issuance of such a variance would comply with appropriate criteria and standards for the issuance of such a variance determination.

920980192

1. ADDITIONAL REQUIREMENTS OF THIS PERMIT (cont.)

J. The permittee shall discharge so as not to violate Hackensack Meadowlands Development Commission (HMDC) Water Quality Regulations promulgated pursuant to the authority of N.J.A.C. 19:4-6.14 et seq.

The HMDC Regulations include, but are not limited to, the following provisions:

The flow from any pipe, conduit, or any other source discharging into the River or its tributarities shall meet the following values:

a. Five Day B.O.D. not to exceed 25 mg/l during any period of discharge;

b. The pH shall not be less than 6.5 nor greater than 8.5;

c. Turbidity shall not exceed 40 Jackson Turbidity Units based upon SiO2;

d. Color shall not exceed 40 standard units based on Platinum Cobalt color;

e. Temperature shall not be greater than 85 F;

f. Nitrogen (Total) shall not exceed 30 mg/l;

g. Suspended Solids shall not exceed 40 mg/l by weight;

h. Phosphates shall not exceed 30 mg/l;

i. Phenols shall not exceed 0.2 mg/l; and

j. Toxic substances shall be kept to as low a value as is consistent with current technological practice representing the highest state-of-the-art and levels consistent with recreational and primary contact water.

2. BIOMONITORING REQUIREMENTS

Acute Toxicity

The permittee shall conduct 96-hour definitive flow-through or definitive modified static renewal bioassay tests, conducted in replicate, of its wastewater discharge at a frequency of one test every three months. If the permittee demonstrates to NJDEP's satisfaction that the first four tests show no measurable acute toxicity, the biomonitoring requirements will be reduced to one test per year. The first bioassay test shall be initiated no later than three months from EDP, unless otherwise specified by the NJDEP.

A. All bioassays shall be conducted in accordance with the following procedures:

(1) Bioassay procedure shall conform to the "Regulations Governing Laboratory Certification and Standards of Performance" (N.J.A.C. 7:18). Subchapter 6 of the regulations contains the criteria and procedures for bioassay testing and analysis. The laboratory performing your bioassay testing will have to be within the laboratory certification program.

(2) The bioassay shall provide a measure of acute toxicity as determined by the wastewater concentration which causes 50% mortality of the appropriate test organisms over a 96-hour period. Test results shall be expressed in terms of Lethal Concentration (LC) and reported as 96-hour LC-50.

(3) With receiving waters having a salinity greater than 1 ppt., the mysid shrimp (Mysidopsis bahia) is recommended. The test temperature shall be 22°C ± 2°C.

B. The following information shall be submitted within two months from the Effective Date of Permit:

(1) An identification of the certified bioassay laboratory responsible for the conduct of the bioassay tests.

(2) A detailed description of the methodology to be utilized in the conduct of the tests, including equipment, retention time of the wastewater in the treatment plant, collection method of a representative effluent sample, and name and source of test organisms.

(3) A schematic diagram which depicts the location that the effluent samples will be taken; the diagram shall indicate the location of effluent sampling in relation to any wastewater treatment facilities and Discharge Serial No.

C. If the results of the 96-hour bioassay indicate greater than 10% fish mortality or a mysid shrimp (invertebrate) mortality of 15% or more in the control, the permittee shall conduct an additional 96-hour bioassay, in replicate, no later than 10 days after completion of the above referenced test.

D. Bioassay results shall be reported on a form provided and shall be submitted within 60 days after completion of the tests. Results shall also be reported on the permittee's Discharge Monitoring Reports (DMR).

E. The information requested (B1 through B3) and the bioassay test results (D) shall be submitted to:

Bureau of Permits Administration
Water Quality Management
Division of Water Resources
CN-029
Trenton, New Jersey 08625

Bureau of Systems Analysis and
Wasteload Allocation
Division of Water Resources
CN-029
Trenton, New Jersey 08625

920980195

3. BEST MANAGEMENT PRACTICES (BMP) REQUIREMENTS

In order to prevent, or minimize the potential for the release of toxic substances from ancillary activities to the waters of the United States through plant runoff, spillage or leaks, sludge or waste disposal or drainage from raw material storage, the permittee shall develop and implement a Best Management Practices (BMP) Plan.

These conditions apply to all permittees who use, manufacture, store, handle or discharge any pollutant listed as toxic under Section 307 (a)(1) of the Clean Water Act and who have ancillary manufacturing operations which could result in significant amounts of these pollutants reaching waters of the United States. These operations include material handling areas; plant site runoff; in-plant transfer, process and material handling areas; loading and unloading operations, and sludge and waste disposal areas.

The BMP Plan shall be consistent with the general guidance contained in the publication entitled "NPDES Best Management Practices Guidance Document," dated June 1981, and prepared by the U.S. Environmental Protection Agency, Office of Water Enforcement and Permits, NPDES Technical Support Branch. As a minimum, the plant shall include the following BMP's:

a. BMP Committee
b. Reporting of BMP Incidents
c. Risk Identification and Assessment
d. Employee Training
e. Inspections and Records
f. Preventive Maintenance
g. Good Housekeeping
h. Materials Compatibility
i. Security

The facility shall incorporate in the BMP Plan any appropriate procedures for adequately controlling spills and leaks of hazardous substances as specified in the DPCC Plan or other preventive plans submitted to the NJDEP. If, in the judgment of the BMP Committee, the present practices identified in these plans are adequate, they may be incorporated into the BMP Plan by reference.

4. COMPLIANCE SCHEDULE

A. The BMP Plan shall be submitted to NJDEP for review within 6 months of the effective date of this permit. The BMP Plan shall be implemented within 12 months of the effective date of this permit.

B. The report specified in Condition F, Part IV, Page 1 shall be submitted to the Administrator, Water Quality Management Element, on or before EDP+10 months.

C. The engineering plans specified in Condition F, Part IV, Page 2 shall be submitted to the Administrator, Water Quality Management Element, on or before EDP+18 months.

D. Installation of the intake structure modifications specified in Condition F, Part IV, Page 2 shall be completed and operation of such facilities shall be initiated on or before EDP+36 months and said operation shall continue thereafter.

920980197

APPENDIX A

BASIS AND BACKGROUND
Facility Modification to Protect Aquatic Organisms at Water Intakes

May 1986

Richard R. Delgado
and
Ann E. Hauck
Thermal Discharges
Bureau of Industrial Waste Management

920980198

1. Introduction

Tremendous volumes of water are withdrawn for cooling at electric power generating stations. For New Jersey generating stations, condenser cooling water flows range from approximately 100 million gallons per day (MGD) at the relatively small E.H. Werner Generating Station to over 3 billion gallons per day at the Salem Generating Station. Smaller volumes are withdrawn from surface waters for other purposes, including industrial cooling, process use, and domestic supply. Aquatic organisms which are forced into or caught upon water intake structures may be harmed and aquatic biological populations and/or ecosystems can be adversely affected.

This report will focus upon water withdrawals for steam electric power generating stations because of the large volumes of water withdrawn. To the extent that similar facilities are employed at other facilities, however, the findings, conclusions, and recommendations of this report will remain applicable.

Section 316 (b) of the Federal Clean Water Act, (33 U.S.C. 1251 *et seq*. requires that "the location, design, construction, and capacity of cooling water intake structures reflect the best technology available for minimizing adverse environmental impact."

2 Environmental Impact of Intakes

a. Impingement

Water intake structures normally include screens (commonly 3/8" mesh) to remove debris from the water in order to protect pumps and other facilities from damage and/or clogging. These intake screens frequently are set in embayments. Commonly, such screens are intermittently rotated and washed of accumulated debris by a high pressure wash. (See Figures 1 and 2).

Larger aquatic organisms, such as fish and crabs, will not pass through the screens. Unless such organisms succeed in avoiding the screens, they will become "impinged" on the screens. Impingement has been related to intake velocity, because fish or crabs which cannot overcome the velocity of flow toward the pumps would be especially subject to impingement. For existing facilities where intake velocity does not appear problematic, common NJPDES permit regulatory practice is to base an intake velocity on the velocity which the plant can meet consistent with proper operation. When intake velocity appears to be contributing to a problem it can be dealt with on an individual case basis in the permit process.

920980199

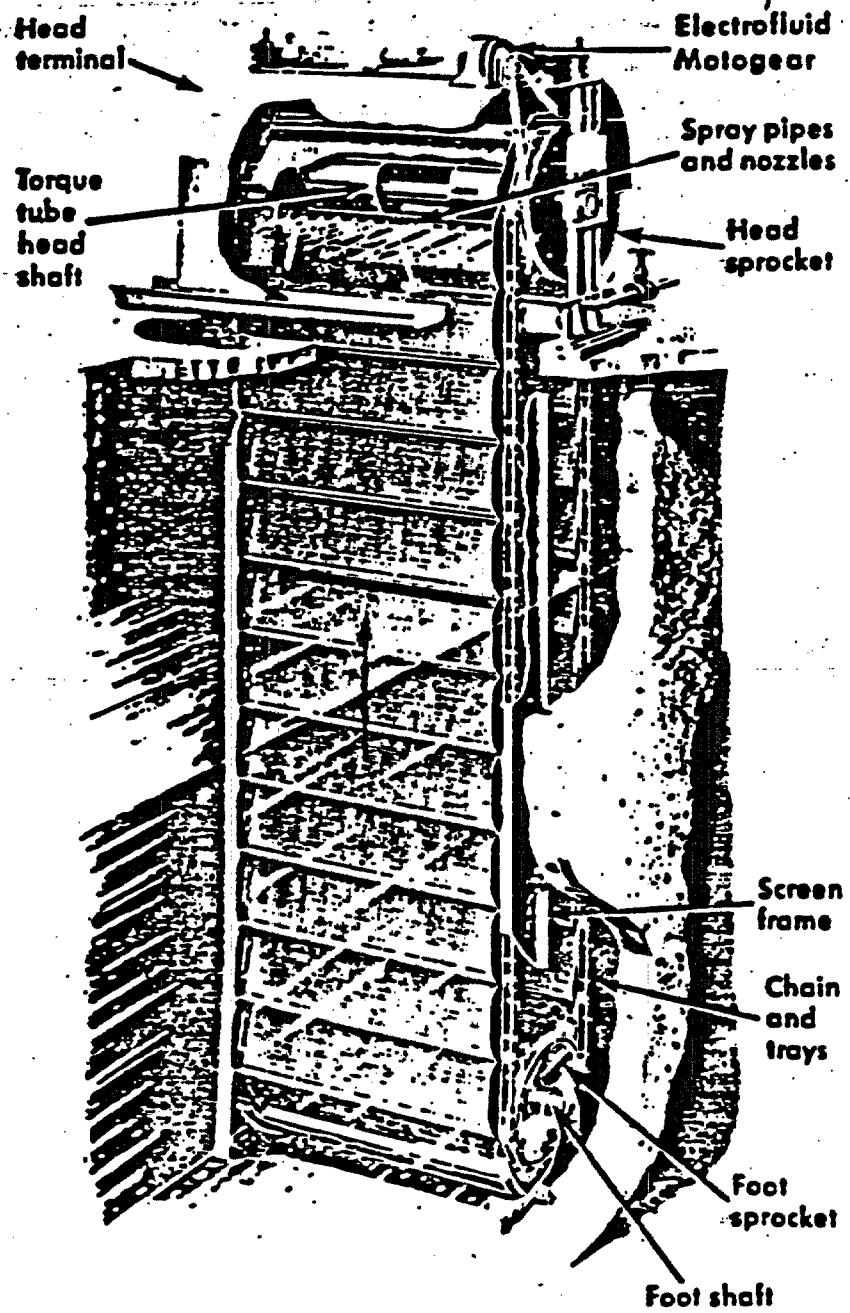

CONVENTIONAL VERTICAL TRAVELING SCREEN

Figure 1

From U.S. Environmental Protection Agency, Development Document, page 64.

920980200

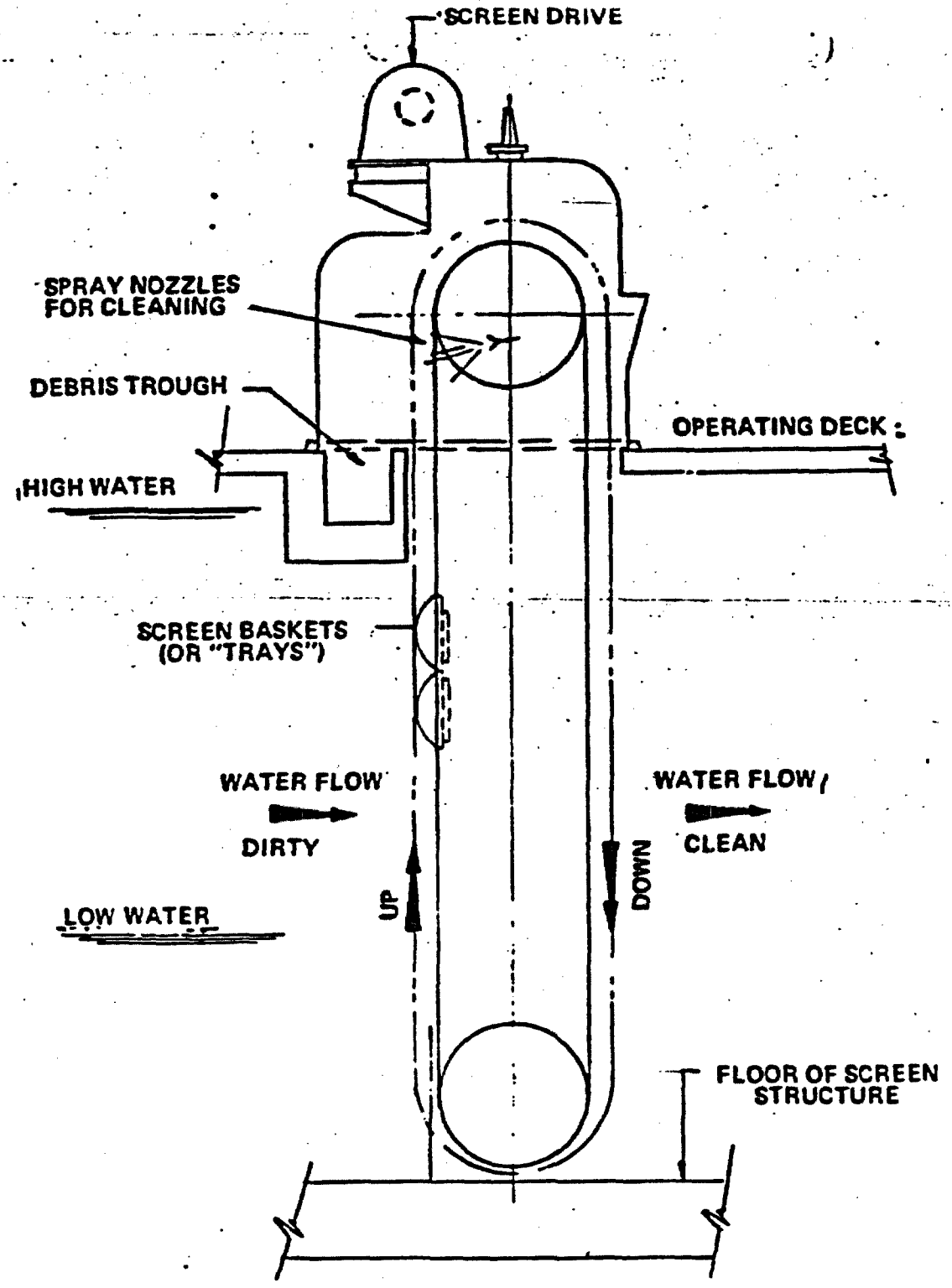

FIGURE 2 CONVENTIONAL VERTICAL TRAVELING SCREEN

Side Elevation

From U. S. Environmental Protection Agency, Development Document, page 65.

920980201

Fish which are impinged for a prolonged period may suffocate because the current which forces them against the screen impedes gill function. Fish which manage to escape or which are removed by a high pressure wash may be injured by removal of protective slimes and/or scales. (Removal of such slimes and/or scales means that the injured organisms may be susceptible to disease and may be less able to compete upon return to the receiving water).

Because of the large volumes of water withdrawn, large numbers of fish (and other aquatic organisms) are impinged on intake structures. Surveys to determine the approximate number of aquatic organisms impinged have been conducted by collecting, identifying, and counting the aquatic organisms which are washed off the screens. Such a study (with data collected prior to 1978) suggests that the number of fish impinged, for example, at the Deepwater Generating Station/ duPont intake may exceed 500,000 fish per year. Significant improvements in water pollution control facilities (including Philadelphia's) have been implemented since the completion of these surveys, and it is reasonable to expect that resultant water quality improvements have permitted increases in populations of aquatic organisms in the vicinity of this intake (and other similarly situated intakes). Therefore, a current study could show substantial increases when compared to the old surveys. Furtheremore, such impingement surveys may seriously underestimate actual impingement damage as impinged organisms tend to be undercounted due to circumstances such as the following:

1. The organism disintegrates. (Such disintegration may be fostered by the force of water at the intake screen, by the high pressure wash used to remove fish and debris from the screen, and/or by biological decay of a dead organism).

2. The organism sinks to the bottom of the waterway following its death.

3. The organism escapes following initial impingement.

It is even harder to reach agreement with respect to the significance of the impingement damage in terms of local and regional populations of fish and other forms of aquatic life, of short term species compositions, and of possible resultant long term alterations of aquatic ecosystems. Regulated facility owners (such as utilities), aquatic resource management agencies, environmental groups, and water resource regulatory agencies may continue to find agreement difficult until scientific research yields a better understanding of such phenomena as compensation and population dynamics and of the structure and function of aquatic ecosystems.

920980202

b. Entrainment

Organisms which are small enough to pass through the openings in the screens (mesh) will be entrained and will pass through the pumps, piping, condensers, and other components of the open cycle cooling system. The small aquatic organisms subject to entrainment include phytoplankton (plant life), fish eggs, fish larvae, juvenile fish, shellfish larvae, and many other forms of aquatic life. Generally, such small organisms lack strong swimming ability and are not able to escape being drawn into intake structures.

Entrained organisms may be injured due to mechanical damage (from being forced into physical contact with internal surfaces of pumps, pipes, and condensers), to pressure and shear damage, to thermal stress and shock due to exposure to elevated temperatures and rapidly changing temperatures, and to toxicity caused by the addition of biocides (such as chlorine) used to prevent/control biofouling. Organisms which survive passage through a plant may experience delayed mortality following return to the receiving water.

Factors which make it difficult to have an accurate quantification of entrainment damage include:

1. Difficulties in accurately measuring density (concentration) of organisms in intake and discharge streams.

2. Difficulties in identifying small organisms to the species level.

3. Some of the organisms in the intake may have died prior to being entrained.

4. Sampling gear can cause stress and even mortality to organisms in the intake and discharge.

As is the case with impingement, even when the numbers of organisms damaged are assessed; it may be difficult to reach agreement upon the significance of entrainment in terms of populations of aquatic organisms and other environmental effects. (Some organisms are subject to both entrainment of egg, larval, and juvenile stages and to impingement upon nearing adult life stages).

920980203

3. Facilities to Abate Impingement and Entrainment

Utilization of a closed cycle cooling system (such as an evaporative cooling tower) is recognized as the best available technology to reduce impingement and entrainment of aquatic life.[2] (The volume of "make-up" water needed for such systems is small compared to the volume needed for open cycle cooling; and the "make-up" water intake can utilize the same devices to protect aquatic life as could be installed at a larger open cycle cooling water intake).. Closed cycle cooling systems also substantially reduce the amount of heat discharged to receiving waters. The major disadvantage of closed cycle cooling systems is cost: substantial costs are involved in the construction of and operation of closed cycle cooling systems.[3]

Behavioral barriers use one or more stimuli to move organisms in a desired manner (away from intakes). In the literature there is discussion of the application of and/or of research on barriers using air bubbles, electric fields, lights, sound, and flow direction changes. While some results have been encouraging in applications where a single fish species is of great importance, few behavioral barriers have been consistently successful at inducing diverse communities of aquatic organisms, including fish, to behave in a predictable manner with a high degree of efficiency.[4]

In the literature, several different modifications to conventional intakes have been proposed in the literature, evaluated, tested, and/or implemented. These include inclined plane screens, double-entry single-exit screens, angled screens, and horizontal screens; all appear to have advantages in principal in reference to impingement.[5]

Utilization of fine mesh screens has been investigated (largely in association with the Tennessee Valley Authority). Fine mesh screens have the advantage of preventing entrainment of small organisms. Successful application (for protection of aquatic life) requires handling and recovery facilities to provide the safe return of impinged organisms to the aquatic environment.

Wedge-wire screens (when designed with narrow openings and low approach velocities) can provide substantial improvements compared to conventional screens at a cost which is a fraction of the cost of the installation and operation of a closed-cycle cooling system. Wedge-wire screens have a long history of application in wells (both for water supply and for oil and gas extraction) and have been utilized at the Big Sandy Generating Station (Kentucky).

920980204

Infiltration intakes (including radial wells, fixed bed filters, and porous dykes) have a high potential to minimize impingement and entrainment. Applications, for the most part, have been on relatively small intakes.

When intake velocity is an evident problem, the intake can be increased in size (or in some cases flow may be reduced) to reduce the approach velocity.

Because an intake's location is probably the most important factor influencing its environmental impact, abandonment of an intake and replacement with a new intake at a different location should be considered as an option on a case by case basis.

Certain design features for conventional intake structures are now accepted as sound practice for protection of aquatic life which relate to the location of screens within the intake structure. These include:

1. Shoreline intake structures should be aligned flush with the shoreline so as to avoid a protrusion into the waterway or an embayment.

2. Screens should be located close to the face of the intake structure (again, avoiding embayments).

3. A common plenum allows utilization of all intake screens (instead of serving each pump or group of pumps by one screen or a limited number of screens).

4. Lateral fish passageways may be incorporated to allow fish to escape impingement.

Modification of existing screens to conform to some or all the above practices may be found necessary when examining the effects of individual facilities.

A remedial design modification which can be applied widely is the installation of fish collection buckets and a return system. (See Figure 3.) This modification includes (1) a fish collection bucket beneath each screen panel spanning the breadth of the screen, (2) a low pressure wash to remove fish from the screen and return them to the waterway, (3) in some cases, the installation of finer mesh screens to reduce entrainment of small fish and other organisms, and (4) upgrading components (headshaft, footshaft, drive motors, etc.) for continuous operation.

Screens equipped with fish buckets and the buckets themselves are commonly called "Ristroph" or "Surry" screens and/or buckets after M.J.D. Ristroph, retired Executive Manager of the Environmental Services Department of Virginia Electric and Power Company, owner and operator of the Surry Nuclear Power Station where the first such fish bucket screen in the United States was installed.[6]

920980205

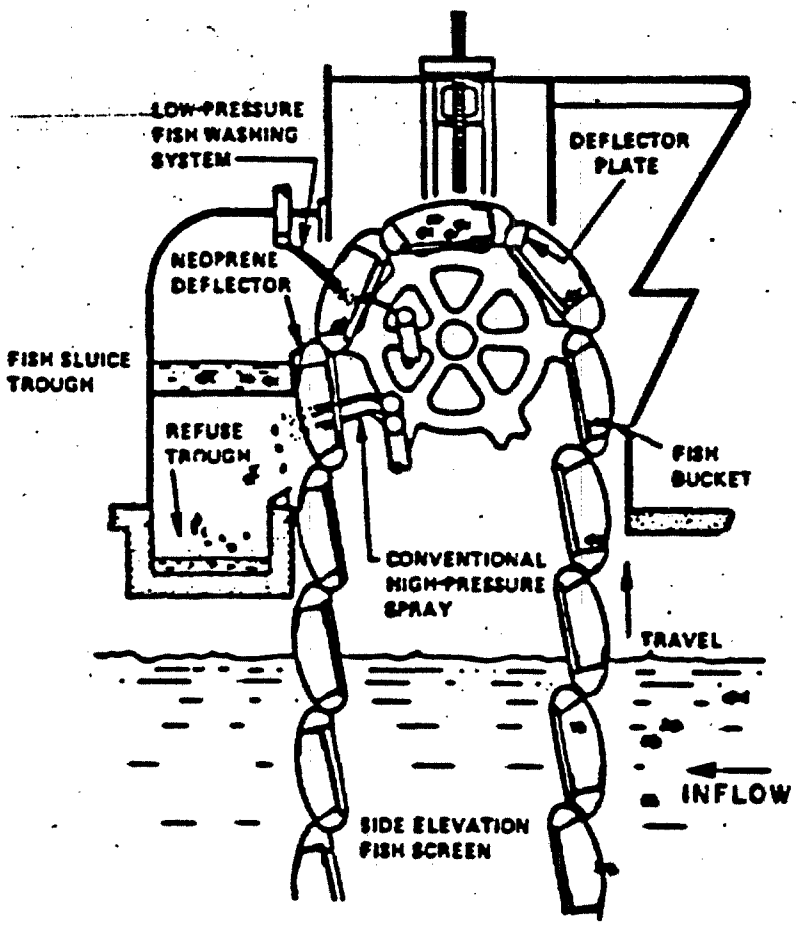

Figure 3

Traveling Screen with Fish Buckets. (Side Elevation.)

From Cannon, et al., page 30.

920980206

Such buckets are designed to contain 2 inches of water so that rotation of the screen causes fish to remain in the water in the bucket following elevation of the screen panel to which they were impinged. (In conventional screens, fish raised above the air-water interface commonly flip back into the water to be reimpinged repeatedly until moribund). The pressure of the water spray used to remove fish is under 20psig to minimize descaling and injury. Continuous operation limits the actual time of inpingement to a few minutes.

The fish return system (troughs) must be designed to meet the individual conditions at the site, and it is critical that fish and other organisms be returned safely to a point where they will not be reimpinged or harmed by the thermal discharge.

The fish bucket screens are reported to be very effective in reducing mortality of impinged fish.[7] Monitoring during 18 months of operation at the Surry Plant found that 99 percent of fish sampled showed a survival rate of 80% or more, and most (87.6%) fish showed a survival rate of 90% to 99.9%, and that an average of 93.3% of impinged fish survived.

4. Costs

The cost of modification (to add fish buckets) of a screen will depend upon many variables, including the following:

1. The material used in the buckets.

2. The size (breadth) and number of screen panels.

3. Local site conditions which govern the design and construction of the fish return system.

"Average" costs per screen for installation of fish buckets were reported (in 1978 dollars) to include:

"Fish Package" (Buckets and appurtenances)	$30,000
Installation	11,000
Upgrade for continuous operation (if needed)- Up to	15,000
Total Installation Cost	$56,000

(EPA reported in 1976 that cost per screen bay would be between $30,000 and $40,000, including fish bypass or return facilities).[8] Costs of finer screen mesh material would be additional.

Operating costs (over and above costs for a conventional screen) for an average screen are reported (1977) to amount to $18,000 per year per screen.[9]

920980207

NJDEP also notes that many of the older fossil fueled generating stations normally operate in intermediate and/or peaking service; and that therefore facilities associated with upgrading screens for continuous operation may not be needed (if circulating water pumps are also turned off when not needed) and that increased operating costs would likely be strongly correlated with the actual utilization of the generating station. These older fossil fueled generating stations tend to have several units of a size substantially smaller than the "average" facilities discussed above (so that actual total installation costs per screen would tend to be lower than average) at these plants.

In view of the many possible variables, the above costs are believed to accurately portray the order of magnitude of total costs involved in adding fish buckets to existing New Jersey facilities; and the total costs appear reasonable in relation to the benefits of a significant reduction in fish mortality.

In some cases, old screens may have such extensive wear that replacement of the entire screen rather than retrofit of buckets is warranted. In such a case, replacement of the screen should not be considered a cost mandated by fish bucket replacement. The incremental cost of adding fish buckets to such a replacement screen would be less than the total cost to add "fish buckets" to an existing screen.

If finer mesh screens are added at the same time, additional costs would be incurred.

5. Engineering Aspects of Screen Modification

The utilization of fish buckets is an existing, demonstrated, and available effective technology to reduce fish mortality. The modifications are compatible with much of the equipment actually in common use, and much of the hardware can be purchased as a package.

In addition to the fish buckets, an additional pipe is needed for the (low pressure) fish removal wash. Frequently the existing (high pressure) sprays must be relocated so as to allow the fish removal sprays to strike screen panels before the debris removal (high pressure) spray. Finally, an additional sluice trough to allow safe return of the fish will normally need to be provided.

Fish buckets can be added without alteration to existing screenwells, operating decks, and/or associated structures.

Most screenwells are constructed so as to allow dewatering which facilitates the installation of buckets and appurtenances. If needed, temporary cofferdams and/or underwater construction could be applied.

920980208

Theoretically the installation of fish buckets could produce additional head loss through the screen, however, such head loss will generally not be significant. Furthermore, continuous screen rotation compensates for this small head loss.

The addition of fish buckets provides greater efficiency in removal of fish, silt, and debris.

The weight of the buckets, attachments and retained water will contribute to the load on the screen mechanism and associated structures. The weight of retained fish and retained water on the upstream side of the screen will impose an unsymmetrical load on the mechanism. With 6 buckets above the water surface filled with 2" of water; this load will be slightly over 62 pounds per linear foot of screen. Generally, this will not be a major increase in total load.

Manufacturers of screens offer both front wash and backwash spray systems. With the backwash spray system, gravity aids fish removal.

Generally a fish bucket retrofit requires elevation of the headshaft and screen frame to accommodate the additional spray nozzles and trough. This also necessitates the use of additional screen panels and a longer chain.

Continuous operation (to reduce the length of impingement) causes additional wear on certain parts of the mechanism and is associated with additional operating costs for more frequent lubrication and replacement of worn parts. Fish bucket modifications, therefore, commonly include upgraded foot shaft bushings, headshaft bearings, chain rollers, pins, guides, flex joints, and larger drive motors to limit these maintenance costs.

Installation of fish buckets will not have significant adverse effects on the process for which water is withdrawn (such as condenser cooling at facilities where steam is utilized to generate electricity).

6. Non-Water Quality Environmental Impact of Screen Modification

Properly designed, constructed, and operated fish bucket modifications have the potential to significantly reduce the mortality of the large numbers of fish (and probably other aquatic organisms) impinged at intake structures. The safe return of these organisms to the environment is clearly a positive result of facility modification.

920980209

Continuous operation utilizing somewhat larger drive motors will increasse the amount of energy utilized in the operation of these screens. This increased energy consumption is not considered significant in comparison to the amount of energy consumed in the production of electricity which is where the modification of intake screens will have the greatest impact.

7. Summary and Conclusions

Sufficient basis exists to require that existing intake structures be modified to include fish buckets, a fish return system, and appurtenances.

920980210

FOOTNOTES

1 - Cannon, et al., Fish Protection at Steam-Electric Power Plants: Alternative Screening Devices. Page 2.

2 - Cannon, et al., Fish Protection at Steam-Electric Power Plants; Alternative Screening Devices. Page 2.

3 - Ibid. Page 2.

4 - Pagano and Smith, Recent Developments in Techniques to Protect Aquatic organisms at the Water Intakes of Steam-Electric Power Plants. Page 23.

5 - Ibid. Page 14.

6 - White and Brehmer, "Eighteen-Month Evaluation of the Ristroph Traveling Fish Screens". Proceedings of the Third National Workshop on Entrainment and Impingment. Page 367.

7 - Ibid. Page 372.

8 - U.S. Environmental Protection Agency, Development Document for Best Technology Available for the Location, Design, Construction, and Capacity of Cooling Water Intake Structures for Minimizing Adverse Environmental Impact. Page 170.

9 - Cannon, et al., Fish Protection at Steam-Electric Power Plants: Alternative Screening Devices. Page 121.

920980211

References

Cannon, J.B., Cada, G.F., Campbell, K.K., Lee, D.W., and Szluha, A.T. 1979. Fish Protection at Steam-Electric Power Plants: Alternative Screening Devices. Oak Ridge National Laboratory Report #ORNL/TM - 6272 (Prepared for the U.S. Nuclear Regulatory Commisssion and the U.S. Environmental Protection Agency) Oak Ridge, Tennessee 37830.

Marcy, Barton C. Jr., and Dahlberg, Michael D. 1980. Overview of Best Technology Available for Cooling Water Intakes. NUS Corporation (Prepared for The Los Angeles Department of Water and Power) Pittsburg, Pa. 15220

Pagano, Roberto and Smith, Wade H.B. 1977. Recent Developments in Techniques to Protect Aquatic Organisms at the Water Intakes of Steam-Electric Power Plants. Mitre Corporation (Contract Sponsor: Electricite de France) McLean, Virginia 22101.

The Task Committee on Fish-Handling Capability of Intake Structures 1981. Water Intake Structures, Design for Fish Protection. Committee on Hydrulic Structures, American Society of Civil Engineers.

U.S. Environmental Protection Agency 1977. Draft Guidance for Evaluating the Adverse Impact of Cooling Water Intake Structures on the Aquatic Environment. U.S. Environmental Protection Agency, Office of Water Enforcement, Permits Division, Industrial Permits Branch.

U.S. Environmental Protection Agency, 1976. Development Document for Best Technology Available for the Location, Design, Construction, and Capacity of Cooling Water Intake Structures for Minimizing Adverse Environmental Impact. U.S. Environmental Protection Agency, Effluent Guidelines Division, Office of Water and Hazardous Materials.

White, John C., Jr. and Brehmer, Morris L., 1976. "Eighteen-Month Evaluation of the Ristroph Traveling Fish Screens," Proceedings of the Third National Workshop on Entrainment and Impingement: Section 316 (b) - Research and Compliance, ed. L.D. Jensen, pp. 367 - 380. E.A. Communications, Melville, New York.

920980212

920980213

STATE OF NEW JERSEY
DEPARTMENT OF ENVIRONMENTAL PROTECTION
Division of Water Resources
Management Services Element
Bureau of Information Systems
CN 029
TRENTON, NEW JERSEY 08625

JUN 01 1992

PSE&G
80 PARK PLAZA T15E
NEWARK NJ 07101

RE: Violation of Effluent Limits or Parameter Reporting Requirements of NJPDES Permit on Discharge Monitoring Report.
NJPDES Permit No: NJ0000647

Dear Permittee:

The 'Water Pollution Control Act' (hereinafter 'The Act'), N.J.S.A. 58:10A-1 et seq. prohibits the discharge of pollutants, except in conformity with a valid New Jersey Pollutant Discharge Elimination System (hereinafter 'NJPDES') permit pursuant to N.J.A.C. 7:14A-1 et seq.. The Department has issued this facility a permit in accordance with the Act. Your facility was provided an opportunity to comment on the draft permit in accordance with N.J.A.C. 7:14A-8.1. Your facility has been on notice of the requirements of the permit since the final permit was issued.

The Department has determined that your facility is in violation of the 'Water Pollution Control Act' and the implementing regulations (N.J.A.C. 7:14A-1 et seq.) by failing to comply with the following permit condition:

> Your Discharge Monitoring Report (DMR) for the period ending 92/03/31 indicated that you are not complying with certain effluent limitations or parameter reporting requirements specified in your permit (see enclosure).

According to the conditions of your permit, it is required that you provide the State and the Regional Administrator with a report concerning any apparent non-compliance, action taken to correct it, and action to be taken to prevent continuation or recurrence of the situation.

BJB000010

920980214

Please note that if you are required to monitor and report the parameters Copper, Chromium, or Zinc only if these pollutants are used in water treatment, you must submit your DMR with Code = 'NODI' in the appropriate sample measurement block(s) if these pollutants are not being used. Code 'NODI' will assure that violation notices are not produced for failure to report.

In accordance with N.J.S.A. 58:10A-10.d. and the NJPDES Regulations, specifically N.J.A.C. 7:14-8.5 and 8.9, failure to comply with the NJPDES Permit effluent limits or to submit complete DMR's, respectively, subjects this facility to civil administrative penalties of up to $50,000 per day per violation, including MANDATORY civil administrative penalties effective July 1, 1991 pursuant to amendments to the Act for Serious Violations, for Significant Non-Compliance Violations, and for failure to submit effluent parameter information within 10 days of receipt of this letter.

Please note that nothing shall preclude the Department from assessing penalties if the missing DMR effluent parameter information was not inadvertently omitted or if the Department was not notified within 30 days of the DMR due date of the existence of extenuating circumstances beyond the control of the permittee.

Furthermore, N.J.S.A. 58:10A-10.f. provides that any person who negligently violates the Act shall, upon conviction, be guilty of a crime of the fourth degree, and shall be subject to a fine of not less than $5,000 nor more than $50,000 per day of violation, or by imprisonment, or by both. Any person who purposely, knowingly, or recklessly violates the Act shall, upon conviction, be guilty of a crime of the third degree as a minimum and shall be subject to a fine of not less than $5,000 nor more than $75,000 ($250,000 if the violation causes a significant adverse environmental effect) per day of violation, or by imprisonment, or by both.

If there is a discrepancy between the DMR information you submitted and the violations listed in the enclosure or you have not already submitted the required non-compliance report, please submit the information to me immediately at the address below.

Very truly yours,

Peter T. Lynch, Chief

Metro Bureau of Regional Enforcement
2 Babcock Place
West Orange, NJ 07052-5504

Enclosure

920980215

NJPDES Number: NJ0000647 Facility Name: PSE&G

Monitoring Period End Date: 92/03/31 Pipe Num: WTPA Mon. Loc.: 1

Parameter: 01045 Description: IRON, TOTAL (AS FE)

VIOLATION: E90 NUMERIC VIOLATION

	Quantity			Concentration	
	Average	Maximum	Minimum	Average	Maximum
MEASUREMENT:	0.0000	0.0000	0.0000	1.2000	1.2000

****

920980217

Central file

NEW JERSEY DEPARTMENT OF ENVIRONMENTAL PROTECTION AND ENERGY
ENVIRONMENTAL REGULATION
WASTEWATER FACILITIES REGULATION PROGRAM
BUREAU OF INDUSTRIAL DISCHARGE PERMITS

M E M O R A N D U M

OCT 14 1992

TO: Robert Oberthaler, Chief, BIDP

THROUGH: Christine Lomack, Wasteload Allocation Unit, BIDP

FROM: Betty Jane Boros-Russo, BIDP

SUBJECT: NJ0000647 Public Service Electric and Gas Company
Hudson Station, Permit Status

The following is the status of the above listed permit. This memorandum is provided for your information given that I will be leaving for maternity leave on October 22, 1992.

- PSE&G Hudson was forwarded to you for signature on May 26, 1992.

- This permit is being held since no decision has yet been made as to whether or not the permittee is eligible for NET limitations.

- This permit action is a modification, and is a 304(l), Major. The existing permit expires in 1995. The permit modification includes final WQBELs effective June 4, 1993.

- It is likely that the facility will petition that the data we used to calculate coefficients of variation (i.e. the data collected in the effluent characterization study) was flawed, since they did so for the Sewaren facility.

- There is a definite NET load of several metals through each outfall into the Hackensack River, from the facility. Therefore, it will still be necessary for PSE&G to install treatment to meet the limits for several parameters, including some metals. If it is agreed that PSE&G is eligible for NET limits, PSE&G must be required to conduct their "background" monitoring at a place other than their influent pipes (i.e. the point they used to determine background River concentrations in the effluent characterization study). This is because DSNs 363, 364 and 366 are located in very close proximity to the intake and PSE&G may be pulling in River water which they have previously used and increased the load of several pollutants to, including metals.

- It is my opinion that this facility should not be eligible for NET water quality based effluent limitations. PSE&G is

definitely contributing to the pollutant load in the Hackensack River and other permittees using contaminated water, such as contaminated well water, are required to meet calculated WQBELs without a NET allowance, this facility should not be treated differently. Further, the WQBELs imposed in the permit are based on the allowance of a mixing zone and applicable water quality criteria. In general, mixing zones allow an increase in mass loading in a waterway and are established based on the assumption that organisms will avoid the highly contaminated areas. The recommendations for mixing zones contained in the USEPA's Technical Support Document, which we are adopting, assume that the effluent discharge is repulsive, such that free swimming organisms would avoid the mixing zones. Given that aquatic organisms are generally attracted to thermal discharges, this "avoidance" is probably not the case for this discharge. Therefore, the calculated WQBELs may already not be adequately protective. Applying them on a NET basis will only increase the chance of the effluent having a detrimental impact on the environment. Please note that in section 2.2.2 of the Technical Support Document, the USEPA cautions the use of mixing zones in cases such as this.

The files for this permit have been left on a disc with Bill Boehle.

WFM249:bjbr

c: Dennis Hart, WFRP

920980219

New Jersey Pollutant Discharge Elimination System

[illegible]

PERMIT NUMBER NJ0000647

Permittee	Co-Permittee
PSE&G 80 PARK PLAZA T17G NEWARK, NJ 07101	

Property Owner	Location of Activity
PUBLIC SERVICE ELECTRIC & GAS P.O. BOX 570 NEWARK, NJ 07101	PSE&G HUDSON GENERATING STA DUFFIELD & VAN KEUREN AVES JERSEY CITY, NJ 07306

Current Authorization Covered By This Approval And Previous Authorization	Issuance Date	Effective Date	Expiration Date
B :Ind/Comm.SW Discharge	12/29/89	2/01/90	1/31/95
C :Thermal SW Discharge	12/29/89	2/01/90	1/31/95
05:Group I - Stormwater Runoff	12/29/89	2/01/90	1/31/95

DISCHARGE TO: Hackensack River

CLASSIFICATION: SE2

By Authority of:
Eric J. Evenson
Acting Director
Division of Water Resources

DEP AUTHORIZATION
JOHN F. FIELDS
ACTING ASSISTANT DIRECTOR-NJPDES
WASTEWATER FACILITIES MANAGEMENT ELEMENT

(Terms, conditions and provisions attached hereto)

State of New Jersey Department of Environmental Protection/Division of Water Resources

BJB000014

9.

920980221

1.A EFFLUENT LIMITATIONS AND MONITORING REQUIREMENTS

During the period beginning EDP and lasting EDP +5 years the permittee is authorized to discharge from outfall serial number: 361, non-contact [redacted] water.

There shall be no discharge of floating solids or visible foam in other than trace amounts attributable to plant operation.

Samples taken in compliance with the specified monitoring requirements shall be taken at the following location: at the outfall of DSN 361, and shall be reported monthly.

	DISCHARGE LIMITATIONS			MONITORING REQUIREMENTS	
Effluent Characteristics	Minimum	Average	Maximum	Frequency	Sample Type
Flow (MGD)	N/A	NL	NL	Daily	Calculated (5)
pH - Influent (S.U.)	NL	N/A	NL	(3)	Grab
pH - Effluent (S.U.)	6.5 (2)	N/A	8.5 (2)	(3)	Grab
Temperature - Influent °F(°C)(1)	N/A	NL	NL	Continuous	-
Temperature - Effluent °F(°C)(1)	N/A	NL	106(41.1)	Continuous	-
Temperature - Difference °F(°C)(1)	N/A	NL	36.5(20.3)	Daily	Calculated
Heat - Net (MBtu/hr)(1)	N/A	NL	4360	Daily	Calculated
Chlorine-Total Residual (mg/l)(4)	N/A	NL	0.2	(6)	Grab

(1) See Part IV - B/C, page 10, 4.J.
(2) When intake pH is less than 6.5, the discharge pH limit shall be the intake pH; when the intake pH is greater than 8.5, the discharge pH limit shall be the intake pH.
(3) Samples shall be taken once every other normal work day, preferably on Mondays, Wednesdays, and Fridays.
(4) This limit shall be expressed as Total Residual Oxidants when feeding alternate biocide.
(5) If practical, the permittee may install a flow meter to obtain direct readings.
(6) Samples shall be taken once every other normal work day, preferably on Mondays, Wednesdays, and Fridays, during chlorination period.

The abbreviation N/A in the table denotes 'Not Applicable' while the abbreviation NL denotes 'Not Limited' with both monitoring and reporting required.

920980222

1.B EFFLUENT LIMITATIONS AND MONITORING REQUIREMENTS

During the period beginning [redacted] and lasting through EDP +5 years the permittee is authorized to discharge from outfall(s) [redacted]mber(s): 61G, storm water runoff.

There shall be no discharge of floating solids or visible foam in other than trace amounts attributable to plant operations.

* Samples taken in compliance with the specified monitoring requirements shall consist of the individual contributors to the outfall at location(s) prior to the combination with off-site runoff. The individual samples may be combined for analyses; and shall be reported monthly.

Effluent Characteristics	DISCHARGE LIMITATIONS Minimum	Average	Maximum	MONITORING REQUIREMENTS Frequency	Sample type
Flow (MGD)	N/A	N L	N L	Monthly	Calculated (4)
pH Range (S.U.)	6.0 (5)	N/A	9.0	Quarterly	Grab
Petroleum Hydrocarbons (mg/l)(2)	N/A	N L	15	Monthly (1)	M. Grab (3)
Total Organic Carbon (mg/l)	N/A	N L	50	Quarterly	Grab
Total Suspended Solids (mg/l)	N/A	N L	50	Quarterly	Grab

(1) During the first precipitation event of the month which causes a discharge during working hours and which is preceded by a minimum dry period of 72 hours.
(2) And no visible sheen.
(3) The permittee shall take samples 15, 30 and 45 minutes after the onset of the discharge. The permittee shall analyze each sample individually and report a maximum value for the samples.
(4) If practical, the permittee may install a flow meter to obtain direct readings.

The abbreviation "N/A in the table denotes 'Not Applicable' while the abbreviation 'NL' denotes 'Not Limited' with both monitoring and reporting required.

(5) The pH shall not be less than 6.0 standard units or not lower than the measured rainfall pH value during the storm event. The rainfall pH value shall represent the "influent" for reporting purposes.

920980223

1.C EFFLUENT LIMITATIONS AND MONITORING REQUIREMENTS

During the period beginning EDP and lasting through EDP +5 years the permittee is authorized to discharge from outfall serial number: WTP; process [redacted] water.

There shall be no discharge of floating solids or visible foam in other than trace amounts attributable to plant operation

Samples taken in compliance with the specified monitoring requirements shall be taken at the following location: at the outfall of DSN WTP; and shall be reported monthly.

	DISCHARGE LIMITATIONS			MONITORING REQUIREMENTS	
Effluent Characteristics	Minimum	Average	Maximum	Frequency	Sample Type
Flow (MGD)	N/A	NL	NL	Continuous	-
Total Organic Carbon (mg/l)	N/A	NL	50	Twice Monthly	Composite
Total Suspended Solids (mg/l)	N/A	30	100	Twice Monthly	Composite
Petroleum Hydrocarbons (mg/l)(1)	N/A	10	15	Monthly	Grab
Copper (mg/l)	N/A	NL	1.0	Monthly	Composite
Iron (mg/l)	N/A	NL	1.0	Monthly	Composite
Nickel (mg/l)	N/A	NL	1.0	(2)	Composite
Zinc (mg/l)	N/A	NL	1.0	(2)	Composite
Acute Toxicity LC50	$\geq$ 50%	N/A	N/A	See Part IV-B/C	
Chronic Toxicity	NL	N/A	N/A	See Part IV-B/C	

(1) And no visible sheen.
(2) Sampling shall be performed only during discharge of chemical/metal cleaning wastes.

The abbreviation "N/A in the table denotes 'Not Applicable' while the abbreviation 'NL' denotes 'Not Limited' with both monitoring and reporting required.

920980224

1.D EFFLUENT LIMITATIONS AND MONITORING REQUIREMENTS

During the period beginning [redacted] and lasting through EDP +5 years the permittee is authorized to discharge from outfall(s) [redacted]ber(s): 61R and 61P, Bottom Ash and Fly Ash Ponds, respectively.

There shall be no discharge of floating solids or visible foam in other than trace amounts attributable to plant operations.

Samples taken in compliance with the specified monitoring requirements shall be taken at the following location(s): at the outfall of DSN(s) 361R & 361P; and shall be reported monthly.

	DISCHARGE LIMITATIONS			MONITORING REQUIREMENTS	
Effluent Characteristics	Minimum	Average	Maximum	Frequency	Sample Type
Flow (MGD)	N/A	NL	NL	Continuous	N/A
Petroleum Hydrocarbons (1)	N/A	10 mg/l	15 mg/l	Twice Monthly	Grab
Total Suspended Solids (net)	N/A	30 mg/l	100 mg/l	Twice Monthly	Composite

(1) And no visible sheen.

The abbreviation "N/A in the table denotes 'Not Applicable' while the abbreviation 'NL' denotes 'Not Limited' with both monitoring and reporting required.

9209802 25

1.E EFFLUENT LIMITATIONS AND MONITORING REQUIREMENTS

During the period beginning [redacted] and lasting through EDP +5 years the permittee is authorized to discharge from outfall serial numbers: 363, gas [redacted] non-contact cooling water.

There shall be no discharge of floating solids or visible foam in other than trace amounts attributable to plant operation.

Samples taken in compliance with the specified monitoring requirements shall be taken at the following location: at the outfall of DSN 363; and shall be reported monthly.

	DISCHARGE LIMITATIONS			MONITORING REQUIREMENTS	
Effluent Characteristics	Minimum	Average	Maximum	Frequency	Sample Type
Flow (MGD)	N/A	NL	NL	Monthly	Calculated (1)
pH - Influent (S.U.)	NL	N/A	NL	Monthly	Grab
pH - Effluent (S.U.)	6.5(2)	N/A	8.5(2)	Monthly	Grab
Temperature-Influent °F(°C)(3)	N/A	NL	NL	Monthly	-
Temperature-Effluent °F(°C)(3)	N/A	NL	106(41.1)	Monthly	-
Temperature-Difference °F(°C)(3)	N/A	NL	NL	Monthly	Calculated

(1) If practical, the permittee may install a flow meter to obtain direct readings.
(2) When intake pH is less than 6.5, the discharge pH limit shall be the intake pH; when the intake pH is greater than 8.5, the discharge pH limit shall be the intake pH.
(3) See Part IV - B/C, page 10, 4.J.

The abbreviation "N/A in the table denotes 'Not Applicable' while the abbreviation 'NL' denotes 'Not Limited' with both monitoring and reporting required.

920980226

1.F EFFLUENT LIMITATIONS AND MONITORING REQUIREMENTS

During the period beginning [redacted] and lasting through EDP +5 years, the permittee is authorized to discharge from outfall serial numbers: 364, 365 [redacted] non-contact cooling water.

There shall be no discharge of floating solids or visible foam in other than trace amounts attributable to plant operation

Samples taken in compliance with the specified monitoring requirements shall be taken at the following location(s): at the outfalls of DSN 364, 365 and 366; and shall be reported monthly.

	DISCHARGE LIMITATIONS			MONITORING REQUIREMENTS	
Effluent Characteristics	Minimum	Average	Maximum	Frequency	Sample Type
Flow (MGD)	N/A	NL	NL	Monthly	Calculated (3)
pH - Influent (S.U.)	NL	N/A	NL	Monthly	Grab
pH - Effluent (S.U.)	6.5(1)	N/A	8.5(1)	Monthly	Grab
Temperature-Influent °F(°C)(4)	N/A	NL	NL	Monthly	-
Temperature-Effluent °F(°C)(4)	N/A	NL	106(41.1)	Monthly	-
Temperature-Difference °F(°C)(4)	N/A	NL	NL	Monthly	Calculated
Chlorine-Total Residual (mg/l)(2)	N/A	NL	0.2	Monthly	Grab

(1) When intake pH is less than 6.5, the discharge pH limit shall be the intake pH; when the intake pH is greater than 8.5, the discharge pH limit shall be the intake pH.
(2) This limit shall be expressed as Total Residual Oxidants when feeding alternate biocides.
(3) If practical, the permittee may install a flow meter to obtain direct readings.
(4) See Part IV - B/C, page 10, 4.J.

The abbreviation "N/A in the table denotes 'Not Applicable' while the abbreviation 'NL' denotes 'Not Limited' with both monitoring and reporting required.

920980227

920980228

920980229

OMB#: Expires

BEFORE COPYING FORM, ATTACH SITE IDENTIFICATION LABEL OR ENTER:

SITE NAME PSE&G

Hudson Generating Station

EPA ID NO. NJD094961042

DRAFT 8-25-89

FORM IC

U.S. ENVIRONMENTAL PROTECTION AGENCY

1989 Waste Minimization Report

IDENTIFICATION AND CERTIFICATION

INSTRUCTIONS: Read the detailed instructions beginning on page 6 of the 1989 Hazardous Waste Report booklet before completing this form.

SEC. I Site name and location address. Complete items A through H. Check the box ☒ in items A, B, D, E, F, G, and H if same as label; if different, enter corrections. If label is absent, enter information. Instruction page 6.

A. EPA ID No. Same as label ☒ or → NJD094961042

B. Site/company name Same as label ☒ or → PSE&G- Hudson Generating Sta.

C. Has the site name associated with this EPA ID changed since 1987? ☐ 1 Yes. ☒ 2 No

D. Street name and number. If not applicable, enter industrial park, building name or other physical location description. Same as label ☐ or → Duffield & Van Keuren Avenues

E. City, town, village, etc. Same as label ☐ or → Jersey City

F. County Hudson

G. State Same as label ☒ (NJ)

H. Zip Code Same as label ☐ 07310-

SEC. II Mailing address of site. Instruction page 6.

A. Is the mailing address the same as the location address? ☒ 1 Yes (SKIP TO SEC. III) ☐ 2 No (COMPLETE SEC. II)

B. Number and street name of mailing address

C. City, town, village, etc.

D. State

E. Zip Code -

SEC. III Name, title, and telephone number of the person who should be contacted if questions arise regarding this report. Instruction page 6.

A. Please print: Last name	First name	M.I.	B. Title	C. Telephone
Dauria	Raymond	-	E&TS Manager	201 333-6710 Extension

SEC. IV Enter the Standard Industrial Classification (SIC) Code that describes the principal products, group of products, produced or distributed, or the services rendered at the site's physical location. Enter more than one SIC Code only if no one industry description includes the combined activities of the site. Instruction page 7.

A.	B.	C.	D.
4911			

SEC. V I certify under penalty of law that I have personally examined and am familiar with the information submitted in this and all attached documents, and that based on my inquiry of those individuals immediately responsible for obtaining the information, I believe that the submitted information is true, accurate, and complete. I am aware that there are significant penalties for submitting false information, including the possibility of fine and imprisonment.

A. Number of form pages submitted: Form IC 12 Form WM

B. Please print: Last name	First name	M.I.	C. Title
Munzenmaier	G.	C.	Manager

D. Signature

E. Date of signature: MO. 04 DAY 27 YR. 90

BJB000016

ITEM C ATTACHMENT
HUDSON GENERATING STATION
1989 WASTE MINIMIZATION REPORT

COMMENTS:

The steam electric and combustion turbine generating stations at Public Service Electric and Gas Company do not routinely produce a RCRA hazardous waste in the production of electrical energy.

The majority of wastes generated are oil related and regulated by the State of New Jersey. These wastes are the result of either waste oil from lubricating oil changes of rotating equipment or oil contaminated debris. Occasionally some RCRA classified waste are generated as a result of maintenance activities.

A spill prevention plan to minimize oil spills, a hazardous waste management program and good housekeeping practices are internal controls used to reduce the hazardous wastes generated at Hudson Generating Station. An independent consultant will be retained to conduct a waste minimization review and opportunity assessment.

These is no direct relationship between the quantity of hazardous waste produced yearly and the generation of electricity at Hudson Generating Station. Therefore, the present comparison of activity to production index is not applicable to our industry.

FC:mc

920980230

NEW JERSEY DEPARTMENT OF ENVIRONMENTAL PROTECTION
HAZARDOUS WASTE GENERATOR ANNUAL REPORT 1989
CERTIFICATION FORM

ITEM 1 USEPA Identification Number: NJD094961042

ITEM 2 Generator (Company) Name: PSE&G - Hudson Generating Station

ITEM 3 Contact Person: Environmental Coordinator

ITEM 4 Phone Number: (201) 330-6420

ITEM 5 Certification:

I certify that the information given in this annual report is true, accurate and complete.

G.C. Munzenmaier	[signature]	4/27/90
(Print or type name)	(Signature)	(Date)

ITEM 6

A ☐ This site (company) generated less than 1.33 tons of hazardous waste for the calendar year 1989 (No Fee)

B ☐ This site (company) generated greater than 1.33 tons of hazardous waste but less than 10 tons of hazardous waste during the calendar year 1989 (Fee $200)

C ☐ This site (company) generated greater than 10 tons of hazardous but less than 100 tons of hazardous waste during the calendar year (Fee $300)

D ☒ This site (company) generated greater than 100 tons of hazardous waste during the calendar year (Fee $400)

ITEM 7 Federal Vendor Identification Number DP - 221 - 212 -800

920980231

NEW JERSEY DEPARTMENT OF ENVIRONMENTAL PROTECTION
HAZARDOUS WASTE GENERATOR ANNUAL REPORT 1989
-REPORT FORM-

1. Generator Name: Public Service Electric & Gas, Hudson Generating Station
2. USEPA ID Number: NJD094961042
3. Site Address: Duffield and Van Keuren Ave., Jersey City, NJ 07306
4. Transporter Name: Environmental Transfer Corp.
5. Transporter USEPA ID Number: NJD991291584
6. TSD Facility Name: Advances Environmental Technology Cor.
7. TSD Facility EPA ID Number: NJD980536593
8. TSD Address: 1 Eden Lane Flanders, NJ 07836

9.

A.) Waste Number (I)	B.) Waste Description (11)	C.) DOT Haz Class (11 or J)	D.) Total Quantity (13)	E.) Units (14)
U133	Hazardous Waste Solid N.O.S	ORM-E NA9189	150	P
F001	Waste Orm-A	ORM -A NA1693	4000	P
X726	Hazardous Waste Liquid N.O.S	ORM-E NA9189	800	P
X726	State Hazardous Waste liquid-NOS Not US DOT Regulated	NONE	3200	P
X726	Waste Oil NOS	Combustible Liquid NA1270	1200	P

NOTE: For each combination of transporter and treatment, storage and disposal facility (TSDF), list the TOTAL quantity manifested for each waste type

920980232

NEW JERSEY DEPARTMENT OF ENVIRONMENTAL PROTECTION
HAZARDOUS WASTE GENERATOR ANNUAL REPORT 1989
-REPORT FORM-

1. Generator Name Public Service Electric & Gas, Hudson Generating Station
2. USEPA ID Number NJD094961042
3. Site Address Duffield & Van Keuren Avenues, Jersey City, N.J. 07306
4. Transporter Name I.T. Environmental Services
5. Transporter USEPA ID Number NJD986563574
6. TSD Facility Name Petroleum Recycling Inc.
7. TSD Facility EPA ID Number NJD981133150
8. TSD Address Cenece Blvd.
   Clayton, NJ 08312
9.

A.) Waste Number (I)	B.) Waste Description (11)	C.) DOT Haz Class (11 or J)	D.) Total Quantity (13)	E.) Units (14)
X722	Waste Petroleum Oil -NOS	Combustible Liquid NA1270	8,750	G

NOTE: For each combination of transporter and treatment, storage and disposal facility (TSDF), list the TOTAL quantity manifested for each waste type

920980233

NEW JERSEY DEPARTMENT OF ENVIRONMENTAL PROTECTION
HAZARDOUS WASTE GENERATOR ANNUAL REPORT 1989
-REPORT FORM-

1. Generator Name Public Service Electric & Gas, Hudson Generating Station
2. USEPA ID Number NJD094961042
3. Site Address Duffield & Van Keuren Avenues, Jersey City, N.J. 07306
4. Transporter Name Hazmat Environmental Services
5. Transporter USEPA ID Number NYD980769947
6. TSD Facility Name Frontier Chemical Waste Processing
7. TSD Facility EPA ID Number NYD043815703
8. TSD Address 4626 Royal Ave.
   Niagra Falls, NY 14303

9.

A.) Waste Number (I)	B.) Waste Description (11)	C.) DOT Haz Class (11 or J)	D.) Total Quantity (13)	E.) Units (14)
X722	Waste Petroleum Oil N.O.S.	Combustible Liquid NA1270	200	G

NOTE: For each combination of transporter and treatment, storage and disposal facility (TSDF), list the TOTAL quantity manifested for each waste type

920980234

NEW JERSEY DEPARTMENT OF ENVIRONMENTAL PROTECTION
HAZARDOUS WASTE GENERATOR ANNUAL REPORT 1989
-REPORT FORM-

1. Generator Name Public Service Electric & Gas, Hudson Generating Station

2. USEPA ID Number NJD094961042

3. Site Address Duffield & Van Keuren Avenues, Jersey City, N.J. 07306

4. Transporter Name Keystone Block Transportation Co.

5. Transporter USEPA ID Number PAD980692008

6. TSD Facility Name Waste Conversion Inc.

7. TSD Facility EPA ID Number PAD085690592

8. TSD Address 2869 Sandstone Dr.
Hatfield, PA 19440

9.

Waste A.) Number (I)	Waste B.) Description (11)	DOT Haz C.) Class (11 or J)	Total D.) Quantity (13)	E.) Units (14)
X725	Waste Oil Contaminated Debris, NOT a US DOT Regulated Material	NONE	20	Y

NOTE: For each combination of transporter and treatment, storage and disposal facility (TSDF), list the TOTAL quantity manifested for each waste type

920980235

NEW JERSEY DEPARTMENT OF ENVIRONMENTAL PROTECTION
HAZARDOUS WASTE GENERATOR ANNUAL REPORT 1989
-REPORT FORM-

1. Generator Name Public Service Electric & Gas, Hudson Generating Station

2. USEPA ID Number NJD094961042

3. Site Address Duffield & Van Keuren Avenues, Jersey City, N.J. 07306

4. Transporter Name Frontier Chemical Waste Process, Inc.

5. Transporter USEPA ID Number NYD0043815703

6. TSD Facility Name Frontier Chemical Waste Process, Inc.

7. TSD Facility EPA ID Number NYD0043815703

8. TSD Address 4626 Royal Avenue
Niagra Falls, NY 14303

9.

A.) Waste Number (I)	B.) Waste Description (11)	C.) DOT Haz Class (11 or J)	D.) Total Quantity (13)	E.) Units (14)
D001	RQ- Waste Flammable Liquid, N.O.S. (D001)	Flammable Liquid UN1993	3000	P

NOTE: For each combination of transporter and treatment, storage and disposal facility (TSDF), list the TOTAL quantity manifested for each waste type

920980236

NEW JERSEY DEPARTMENT OF ENVIRONMENTAL PROTECTION
HAZARDOUS WASTE GENERATOR ANNUAL REPORT 1989
-REPORT FORM-

1. Generator Name Public Service Electric & Gas, Hudson Generating Station

2. USEPA ID Number NJD094961042

3. Site Address Duffield & Van Keuren Avenues, Jersey City, N.J. 07306

4. Transporter Name Waste Conversion Inc.

5. Transporter USEPA ID Number PAD085690592

6. TSD Facility Name Waste Conversion Inc.

7. TSD Facility EPA ID Number PAD085690592

8. TSD Address 2869 Sandstone Dr.
Hatfield, PA 19440

9.

A.) Waste Number (I)	B.) Waste Description (11)	C.) DOT Haz Class (11 or J)	D.) Total Quantity (13)	E.) Units (14)
X725	Waste Oil Contaminated Debris, Not a US DOT Regulated Material	None	100	Y

NOTE: For each combination of transporter and treatment, storage and disposal facility (TSDF), list the TOTAL quantity manifested for each waste type

920980237

NEW JERSEY DEPARTMENT OF ENVIRONMENTAL PROTECTION
HAZARDOUS WASTE GENERATOR ANNUAL REPORT 1989
-REPORT FORM-

1. Generator Name Public Service Electric & Gas, Hudson Generating Station

2. USEPA ID Number NJD094961042

3. Site Address Duffield & Van Keuren Avenues, Jersey City, N.J. 07306

4. Transporter Name Environmental Transport Group, Inc.

5. Transporter USEPA ID Number NJD000692061

6. TSD Facility Name C.W.M. Chemical Services, Inc.

7. TSD Facility EPA ID Number NYD049836679

8. TSD Address 1550 Balmer Road
Model City, NJ 14107

9.

A.) Waste Number (I)	B.) Waste Description (11)	C.) DOT Haz Class (11 or J)	D.) Total Quantity (13)	E.) Units (14)
X910	Waste Chemicals N.O.S. US DOT Non-Regulated	NONE	35	Y

NOTE: For each combination of transporter and treatment, storage and disposal facility (TSDF), list the TOTAL quantity manifested for each waste type

920980238

NEW JERSEY DEPARTMENT OF ENVIRONMENTAL PROTECTION
HAZARDOUS WASTE GENERATOR ANNUAL REPORT 1989
-REPORT FORM-

1. Generator Name Public Service Electric & Gas, Hudson Generating Station
2. USEPA ID Number NJD094961042
3. Site Address Duffield & Van Keuren Avenues, Jersey City, N.J. 07306
4. Transporter Name NAPPI Trucking Corp.
5. Transporter USEPA ID Number NJD000813477
6. TSD Facility Name E.I. DuPont DeNemours & Co., Inc.
7. TSD Facility EPA ID Number NJD002385730
8. TSD Address Chambers Worns, Route 130
   Deepwater, NJ 08023

9.

Waste A.) Number (I)	Waste B.) Description (11)	DOT Haz C) Class (11 or J)	Total D.) Quantity (13)	E.) Units (14)
D007	Hazardous Waste Liquids -N.O.S.	O.R.M.-E. NA9189	190,490	G

NOTE: For each combination of transporter and treatment, storage and disposal facility (TSDF), list the TOTAL quantity manifested for each waste type

920980239

NEW JERSEY DEPARTMENT OF ENVIRONMENTAL PROTECTION
HAZARDOUS WASTE GENERATOR ANNUAL REPORT 1989
-REPORT FORM-

1. Generator Name Public Service Electric & Gas, Hudson Generating Station

2. USEPA ID Number NJD094961042

3. Site Address Duffield & Van Keuren Avenues, Jersey City, N.J. 07306

4. Transporter Name Horwith Trucking Inc.

5. Transporter USEPA ID Number PAD064035819

6. TSD Facility Name Chemical Waste Management Inc- Emelle Facility

7. TSD Facility EPA ID Number ALD000622464

8. TSD Address Alabama Highway 17 at Mile Marner, 163
Emelle, Alabama 35459

9.

A.) Waste Number (I)	B.) Waste Description (11)	C.) DOT Haz Class (11 or J)	D.) Total Quantity (13)	E.) Units (14)
X910	Waste Chemicals NOS Not a US DOT Regulated Material	None	567,120	P

NOTE: For each combination of transporter and treatment, storage and disposal facility (TSDF), list the TOTAL quantity manifested for each waste type

920980240

NEW JERSEY DEPARTMENT OF ENVIRONMENTAL PROTECTION
HAZARDOUS WASTE GENERATOR ANNUAL REPORT 1989
-REPORT FORM-

1. Generator Name Public Service Electric & Gas, Hudson Generating Station
2. USEPA ID Number NJD094961042
3. Site Address Duffield & Van Keuren Avenues, Jersey City, N.J. 07306
4. Transporter Name Environmental Trasport Group Inc.
5. Transporter USEPA ID Number NJD00692061
6. TSD Facility Name Chemical Waste Management, Inc - Emelle Facility
7. TSD Facility EPA ID Number ALD000622464
8. TSD Address Alabama Highway 17 at Mile Marner 163
   Emelle, Alabama 35459

9.

A.) Waste Number (I)	B.) Waste Description (11)	C.) DOT Haz Class (11 or J)	D.) Total Quantity (13)	E.) Units (14)
X910	Waste Chemicals N.O.S. Not a US DOT Regulated Material	NONE	209,720	P

NOTE: For each combination of transporter and treatment, storage and disposal facility (TSDF), list the TOTAL quantity manifested for each waste type

920980241

NEW JERSEY DEPARTMENT OF ENVIRONMENTAL PROTECTION
HAZARDOUS WASTE GENERATOR ANNUAL REPORT 1989
WASTE SUMMARY FORM

Generator (Company) Name: Public Service Electric & Gas
Hudson Generating Station

US EPA ID Number: NJD094961042

Directions

Please indicate below the total quantity of hazardous waste manifested during the 1989 report year for each unit of measure. Enter the units of measure as they appeared in item #14 of the manifest. Do not convert one form of unit of measure to another.

199,440 G - Gallons (liquids only)

789,190 P - Pounds

-0- T - Tons

155 Y - Cubic Yards

-0- L - Liters (Liquids only)

-0- K - Kilograms

920980242

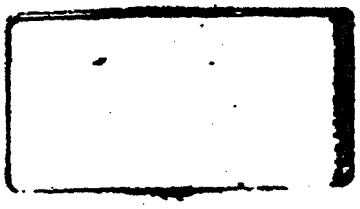

PUBLIC SERVICE ELECTRIC & GAS COMPANY
Hudson Generating Station-Petty Cash Fund

15383

55-48/212

4-27 19 90

PAY TO THE ORDER OF N.J. DEPARTMENT OF ENVIRONMENTAL PRO. $: 400 00

FOUR HUNDRED Dollars & 00/100 DOLLARS

THE TRUST COMPANY OF NEW JERSEY
Journal Square Office
Jersey City, N.J. 07306

PUBLIC SERVICE ELECTRIC & GAS COMPANY
HUDSON GENERATING STATION
PETTY CASH FUND

Auth. Sig.

FOR

⑈015383⑈ ⑆021200407⑆ 104 01⑈15625⑈

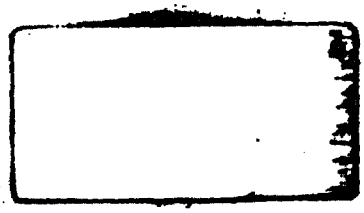

920980243

920980244

HWM 00MC
1/90

New Jersey Department of Environmental Protection
Division of Hazardous Waste Management
2 Babcock Place
West Orange, N.J. 07052
(201) 669-3960

Let's protect our earth

NOTICE OF VIOLATION

ID NO. NJD094961042 DATE 9/14/90

NAME OF FACILITY PUBLIC SERVICE ELECTRIC & GAS - HUDSON GENERATIN STATION

LOCATION OF FACILITY DUFFIELD and VAN KEURAN AVES.

NAME OF OPERATOR CHARLES GRIGNON - FACILITY MANAGER

You are hereby NOTIFIED that during my inspection of your facility on the above date, the following violation(s) of the Solid Waste Management Act, (N.J.S.A. 13:1E-1 et seq.) and Regulations (N.J.A.C. 7:26-1 et seq.) promulgated thereunder and/or the Spill Compensation and Control Act, (N.J.S.A. 58:10-23.11 et seq.) and Regulations (N.J.A.C. 7:1E-1 et seq.) promulgated thereunder were observed. These violation(s) have been recorded as part of the permanent enforcement history of your facility.

DESCRIPTION OF VIOLATION N.J.A.C. 7:26-9.4(d)5 = FAILURE TO CONDUCT A DAILY INSPECTION OF HAZARDOUS WASTE CONTAINER STORAGE AREA (NO WRITTEN DOCUMENTATION - LOGB FOUND DURING INSPECTION) 9.7(f) - FAILURE TO HAVE/LIST THE NAME, ADDRESSES, and PHONE NUMBERS (HOME & WORK) FOR ALL PERSONS QUALIFIED TO ACT AS EMERGENCY COORDINATOR IN THE CONTINGENCY PLAN.

Remedial action to correct these violations must be initiated immediately and be completed by OCTOBER 15, 1990. Within fifteen (15) days of receipt of this Notice of Violation, you shall submit in writing, to the investigator issuing this notice at the above address, the corrective measures you have taken to attain compliance. The issuance of this document serves as notice to you that a violation has occurred and does not preclude the State of New Jersey, or any of its agencies from initiating further administrative or legal action, or from assessing penalties, with respect to this or other violations. Violations of these regulations are punishable by penalties of $50,000 per violation.

NJDEP HAZARDOUS WASTE ADVISEMENT PROGRAM 1(609)292-8341

Stephan Szarvenings

Investigator, Division of Hazardous Waste Management
Department of Environmental Protection
STEPHAN SZARVENINGS

12.

BJB000017

920980245

WHW-001 (REV. 8/88)

State of New Jersey
Department of Environmental Protection
Division of Hazardous Waste Management
Manifest Section
CN 028, Trenton, NJ 08625

Please type or print in block letters. (Form designed for use on elite (12-pitch) typewriter.)

Form Approved. OMB No. 2050-0039. Expires 9-30-

UNIFORM HAZARDOUS WASTE MANIFEST

1. Generator's US EPA ID No.: N J D 0 9 4 9 6 1 0 4 2 — Manifest Document No.: 5 5 4 9 1

2. Page 1 of 1

Information in the shaded areas is not required by Federal law.

3. Generator's Name and Mailing Address
Public Service Electric & Gas, Hudson Generating Station
Duffield & Van Keuren Avenues, Jersey City, NJ 07306

4. Generator's Phone (201) 330-6411 Attn: Tom Scott

A. State Manifest Document Number: NJA 0756267

B. State Generator's ID: Same

5. Transporter 1 Company Name: Nappi Trucking ~~Inc.~~ Corp. (TMS)

6. US EPA ID Number: N J D 0 0 0 8 1 3 4 7 7

C. State Trans. ID: NJDEP S 1 0 3 4 2

7. Transporter 2 Company Name:

8. US EPA ID Number:

D. Transporter's Phone (201) 566-3000

E. State Trans. ID:

9. Designated Facility Name and Site Address
E.I. DuPont DeNemours & Co., Inc.
Chambers Works, Route 130
Deepwater, NJ 08023

10. US EPA ID Number: N J D 0 0 2 3 8 5 7 3 0

F. Transporter's Phone ( )

G. State Facility's ID: N/A

H. Facility's Phone 609) 299-8098

11. US DOT Description (Including Proper Shipping Name, Hazard Class, and ID Number)	HM		12. Containers No.	Type	13. Total Quantity	14. Unit Wt/Vol	Waste No.
a.	X	Hazardous Waste Liquid, n.o.s. ORM-E NA9189	0 0 1	T T	0 5 3 0 0	G	D 0 0 7
b.							
c.							
d.							

J. Additional Descriptions for Materials Listed Above

a. L/T >90% Water
<10% Tetraamonium ethylenediamine
tetraacetate

b.

d.

K. Handling Codes for Wastes Listed Above

a. c.

b. d.

15. Special Handling Instructions and Additional Information

Contract # OW2915 Release # 019

Seal # OWD 416658

C) DECAL #- TEMP
NJ LIC.# T986CK

16. GENERATOR'S CERTIFICATION: I hereby declare that the contents of this consignment are fully and accurately described above by proper shipping name and are classified, packed, marked, and labeled, and are in all respects in proper condition for transport by highway according to applicable international and national government regulations.

If I am a large quantity generator, I certify that I have a program in place to reduce the volume and toxicity of waste generated to the degree I have determined to be economically practicable and that I have selected the practicable method of treatment, storage, or disposal currently available to me which minimizes the present and future threat to human health and the environment; OR, if I am a small quantity generator, I have made a good faith effort to minimize my waste generation and select the best waste management method that is available to me and that I can afford.

Printed/Typed Name: THOMAS SCOTT — Signature: Thomas Scott — Month Day Year: 12 09 89

17. Transporter 1 Acknowledgement of Receipt of Materials

Printed/Typed Name: RICHARD HORNYAK — Signature: Rich Hornyak — Month Day Year: 12 09 89

18. Transporter 2 Acknowledgement of Receipt of Materials

Printed/Typed Name: — Signature: — Month Day Year:

19. Discrepancy Indication Space

20. Facility Owner or Operator: Certification of receipt of hazardous materials covered by this manifest except as noted in Item 19.

Printed/Typed Name: — Signature: — Month Day Year:

GENERATOR — TRANSPORTER — FACILITY

In case of an emergency or spill immediately call the state the emergency occurred in ... the N.J. Dept. of Environmental Protection, (609) 292-5560 (Day) (609) 292-7172 (Night)

EPA Form 8700-22 Rev. 9/88 Previous editions are obsolete.

920980246

TIME IN: _____

TIME OUT: _____

PHOTOS TAKEN (__) YES (√) NO IF YES, HOW MANY? _____

SAMPLE TAKEN (__) YES (√) NO NO. OF SAMPLES _____

NJDEP SAMPLE ID#: _____

MANIFESTS REVIEWED (√) YES (__) NO

Number of manifests in compliance 146

Number of manifests not in compliance 0

List manifest document numbers of those manifests not in compliance.

~~Only one manifest needed~~ EPA concerns, NJA0482267 had no LAND BAN NOTIFICATION

920980247

SITE BACKGROUND INFORMATION

EMPLOYEES: 260 # YEARS IN OPERATION: 30+ 8 hr SHIFTS/WEEK: 4/7

ACRES: 40+ # BUILDINGS: 10 PRODUCT PRODUCED /YR: 1

PREVIOUS OPERATIONS AT SITE: NONE -

WATER SUPPLY: JERSEY CITY WATER SUPPLY, and HACKENSACK RIVER

MONITORING WELLS: 5 - for UST removal requirements (DICAR program)

SANITARY DISPOSAL: HMDC landfill.

ENVIRONMENTAL PERMITS:

CORPORATE INFORMATION: N/A

PREVIOUS ENFORCEMENT HISTORY: AO/NCAPA for NJDEP-DEQ violations.

TANKS ON SITE: 1-2,000 UST for gasoline.

ADDITIONAL COMMENTS:

920980248

On 9/14, and 10/2/90 I performed a RCRA inspection at the Public Service Electric & Gas Co.-Hudson Generating Station (PSEG) in Jersey City, N.J. The facility representative was Mr. Frank Czigler.

PSEG is in the business of generating electricity for several Hudson County communities. To generate the electricity, they use fossil fuels (coal & natural gas) to power their turbine generators.

PSEG does not have processes that produce any hazardous waste streams. That is, the production of the electricity does not produce any hazardous waste. It is the maintenance requirements of the machinery needed to generate that electricity, and the post treatment of their wastewater that generates PSEG's hazardous waste. This is quite evident, since PSEG generates electricity 24 hours a day, 7 days a week.

PSEG's biggest waste stream is waste oil. PSEG may use up to 20 different types of lubricating, hydraulic, crankcase, etc.. oils in their maintenance routines. There are four areas that have satellite accumulation areas for waste oil. The first (@ 3/4 full) is located in their "main transmission" room which houses the turbine decks. The oils used here are for the lubrication of the various gears, pumps, and valves found. No problems were found with this container. The second drum is located just outside their maintenance shop. Their maintenance shop does most of the repair work needed for almost any aspect found in the facility. The maintenance shop also has one 55 gal. drum (3/4 full) that stores their waste oils. The shop also maintains a drum (1/4 full) that accumulates solvent wastes (1,1,1 TCE). On a very small scale, PSEG uses small amounts of the 1,1,1 TCE to clean special parts (The material is usually applied by hand brush or spray can. They generate this material only one or two times a year. There were no problems found with the drums found here.

The third area is behind their Coal storage pits. Here, PSEG maintains a small maintenance shop that takes care of all of the heavy equipment used in this area. This area only generates drums of waste oils. No problems were found with the satellite accumulation drum found here

920980249

(drum was M/T - had not accumulated waste yet). The last area that may have a satellite accumulation drum may be in their wastewater treatment area. The wastewater treatment system has a 500 gal.,aboveground oil water separator that is used to screen out any oil before it reaches the treatment system, and prior to being discharged into the Hackensack River. During this inspection, no satellite accumulation drums were found here.

PSEG stores their waste in a hazardous waste shed. This shed has its own secondary containment. Inside the shed, PSEG was found to have the following hazardous wastes:

A) 14 - 55 gal.drums of X726

B) 1 - 55 gal.drum of D001 - paint related material.

No problems were found inside the shed, with any of the drums found.

The last satellite accumulation area is found by their coal unloading station. PSEG maintains a rolloff to store all of the cleanup material used in their maintenance operations (Tyvek suits, spill pads, garbage bags, etc... all contaminated with oil). This waste is shipped off site as an X725 (the rolloff was @ 1/2 full).

PSEG has produced other types of wastes, that aren't generated on a normal basis. These would be D009 - mercury switches that need replacement, and D001 - ethanol tried in maintenance shop to replace the 1,1,1 TCE. Also, January & February 1989, PSEG performed some routine maintenence on their turbine heat exchangers. PSEG flushed their entire system, to clean and scale the internal piping, with a non-hazardous/non- RCRA listed material called Tetraamonium ethylenediamide tetraacetate. When the cleaning procedure was finished, PSEG performed a chemical analysis of the material (including E P Toxic) and found that trace amounts of Chromium were found. This chromium is found in some of the piping in the

920980250

exchangers, not the material used to clean them. As a precautionary measure, PSEG listed the waste as a D007.

The only other operation of interest is the wastewater treatment system. PSEG has a NJPDES permit (NJ0000647) do discharge all of their non-contact cooling water, and steam generation water into the Hackensack River. The non-contact cooling water is used to condense the steam after it has gone through one of two turbines. This procedure is accomplished by using condensers. This water is then returned to the river under their NJPDES permit. The water used in the steam generation, is supplied by Jersey City. Before the water can enter the system, it must be pre-treated, and all contaminants removed. This is done by treating the water first with hydrazine to lower it's corrositivity, and then running it through several tanks of ionic/non-ionic resins which remove the metals. They then run it through several carbon filters before it gets heated into steam, to run the turbines. Having gone through the turbines, the material is sent through the wastewater system's oil/water separator (to remove any residual oil) before being placed into one of two settling basins. Here they add a sulfuric acid solution to the water (to lower the pH), before being released to the river. They tests the water with a 4,7,& 10 pH buffer solution before releasing the water. The acid solution is from the initial pre-treatment of the water. PSEG back washes the resin beds to regenerate them.

The facility tour found that PSEG was in total compliance with all applicable regulations, no violations were found during my inspection.

A regular documentation review was performed, and PSEG was found to be in compliance with all, but two small items. They were found to have failed to conduct a daily inspection of their hazardous waste storage areas (9.4(d)5); and failure to have the name, address, and phone number (home & office) for all those persons qualified to act as the Emergency Coordinator, in the contingency plan (9.7(f)).

Other than these two items, no other violations were found during my inspection. Also, no referral to the USEPA is required. All those manifests requiring land ban notifications, had all of the appropriate paperwork.

920980252

Describe the activities that result in the generation of hazardous waste.

SEE NARRATIVE

Identify the hazardous waste located on site, and estimate the approximate quantities of each. (Identify Waste Codes)

3-55gal drums (~~Satellite~~ accumulation) of X726 WASTE OIL
1-55gal " (" ") of F001 (1/4 full)
1,1,1-TCE

In H.W. ~~storage~~ shed:

14-55gal. drums of X726 WASTE OIL
1-55gal. drum of D001 PAINT RELATED MATERIAL
1-rolloff (1/2) full of X725

Temporary Bldgs.-U.E. & C.	L	W	H	Material

Permanent Structures	L	W	H	Material
Switching Station				
Diesel Oil Pump				
Diesel Oil Tank				
26KV Sub				
138KV Sub				
138KV Sub				
26KV Sub				
Switch House				
Frequency House				
Yard Garage				
Storage Shed				

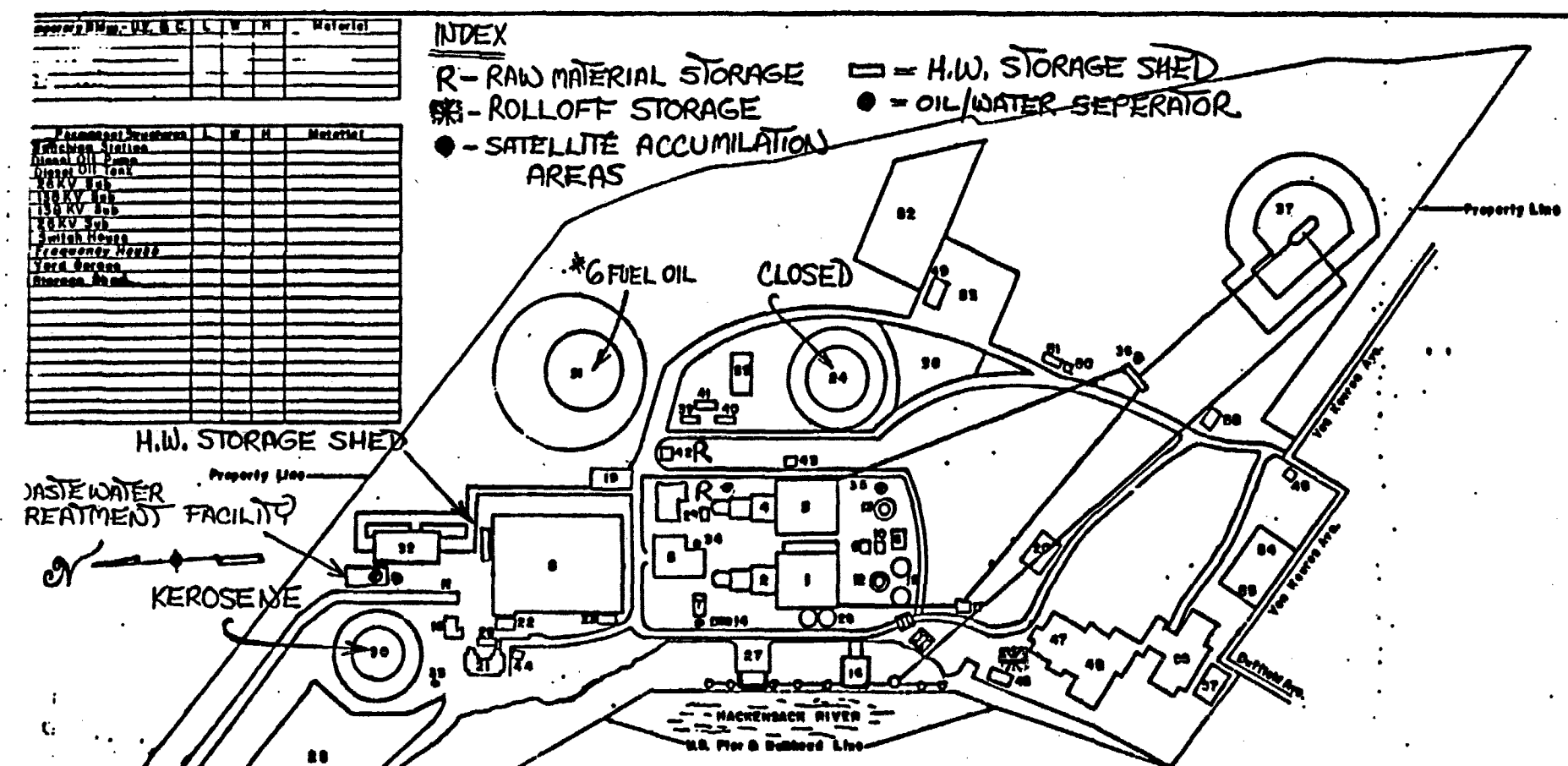

No.	Permanent Structures	L	W	H	Material
1	No.1 Boiler	142	60	174	Metal
2	No.1 Turbine Deck	166	180	26	Metal
3	No.2 Boiler	139	149	290	Metal
4	No.2 Turbine Deck				Metal
5	Service Bldg.	128	113	27	Cinder Block
6	Fire Pump House	21	24	10	Cinder Block
7	No.1 Main Trans.				
8	230 Kv Switchyard	100	46		
9	No.1 Station Pwr. Trans.				
10	No.2 Station Pwr. Trans.				
11	Discharge Canal				
12	No.1 Chimney		34	328	Concrete
13	No.2 Chimney		41	498	Concrete
14	Bulk Hydrogen & CO2 Storage	21	10		Metal
15	Chemical Waste Basin	48	23	11	Concrete
16	Barge Coal Unloading				
17	Coal Transfer Tower-Yard Office	35	30	99	Block-Metal
18	Demineralized Water Tanks		33	33	Metal
19	Storage Bldg.	100	80	18	Metal
20	Marion Metal Shed				
21	Gas Turbine	100	78	32	
22	No.1 Auto Trans.				
23	No.2 Auto Trans.				
24	[illegible],000 bbl Fuel Oil Tank				

No.	Permanent Structures	L	W	H	Material
25	Ash Disposal Area				
26	Ash Dewatering Tanks				
27	Screen Well	71	82	39	Concrete
28	No.3 Main Trans.				
29	No.2 Main Trans.				
30	50,000 bbl Fuel Oil Tank				
31	226,500 bbl Fuel Oil Tank				
32	Storage Building				
33	Foam Storage Shed				
34	Foam Storage Shed				
35	Storage Tank Chemical Additive				
36	Bradford Breaker				
37	Coal Storage Pile				
38	Parking Lot				
39	No.1 Fuel Oil Pumping Station				
40	No.2 Fuel Oil Pumping Station				
41	No.1 & No.2 Control House				
42	No.1 & No.2 F.O. Condensate House				
43	Pulverizer Repair Shed				
44	Gas Turbine Repair Shed				
45	Chlorine House				
46	Gate House				
47	Boiler House				
48	Turbine Room				

Public Service Electric & Gas Co.
HUDSON GENERATING STATION
BUILDING LAYOUT

Drawn J. Hosty Checked G.W.C. 9-29-67
Scale N.T.S. Approved R.F. Steinke
Rev. 7-25-75 M6DL 967

920980254

GENERAL CHECKLIST

GENERAL		YES	NO	N/A
7:26-7.4(a)1	Does the Generator have an EPA ID number?	✓		
HAZARDOUS WASTE DETERMINATION				
7:26-8.5(a)	Did the generator test its waste to determine whether it is hazardous?	✓		
7:26-8.5(b)	Did the generator determine the hazardous characteristics based upon knowledge of process?	✓		
	Is the waste hazardous?	✓		
7:26-8.5(d)	Were test results, waste analysis, or other determinations made in accordance with this section kept for three years from the date that the waste was last sent to an on-site or off-site TSF?	✓		
MANIFESTS				
7:26-7.4(a)4	Does each manifest have the following information? Please circle the elements missing and obtain a copy of the incomplete manifests. (List those manifests that are deficient on C-1).			
7:26-7.4(a)4i	The generator's name, address and phone number.	✓		
7:26-7.4(a)4ii	The generator's EPA ID number.	✓		
7:26-7.4(a)4iii	The hauler(s) name, address phone number and NJ registration.	✓		
7:26-7.4(a)4iv	The hauler(s) EPA ID number.	✓		
7:26-7.4(a)4v	The name, address and phone number of the designated TSD facility.	✓		
7:26-7.4(a)4vi	The TSF's EPA ID number.	✓		
7:26-7.4(a)4v	The name, address and phone number of the designated TSD facility.	✓		
7:26-7.4(a)4vii	The name, type and quantity of hazardous waste being shipped, including such particulars as may be required regarding same?	✓		
7:26-7.4(a)4viii	Special handling instructions and any other information required on the form to be shipped by generator?	✓		

920980255

		YES	NO	N/A
7:26-7.4(3)	Did the generator describe all N.O.S. wastes in Section J?	✓		
7:26-7.4(a)1x	When shipping hazardous waste to a waste reuse facility does the generator enter the waste reuse facility I.D. # in the section G of the Uniform Manifest?	✓		
7:26-7.4(a)5	Before allowing the manifested waste to leave the generator's property, did the generator:	✓		
7:26-7.4(a)5i	Sign the manifest certification by hand?	✓		
7:26-7.4(a)5ii	Obtain the handwritten signature of the initial transporter and date of acceptance on the manifest?	✓		
7:26-7.4(a)5iii	Retain one copy and forward one copy to the state of origin and one copy to the state of destination?	✓		
7:26-7.4(a)5iv	Provide the required numbers of copies for: generator, each hauler, owner/operator of the designated facility, as well as one copy returned to the generator by the facility owner/operator?	✓		
7:26-7.4(a)5v	Give the remaining copies of the manifest form to the hauler?	✓		
7.26-7.4(f)	Has the generator maintained facility records for three (3) years? (Manifest(s), exception report(s) and waste analysis)	✓		
7:26-7.4(h)1	Has the generator received signed copies of portion B (from the TSD facility) of all manifests for waste shipped off site more than 35 days ago?	✓		
7:26-7.4(h)1	If not: Did the generator contact the hauler and/or the owner or operator of the TSDF and the NJDEP at (609) 292-8341 to inform the NJDEP of the situation?			
7:26-7.4(h)2	Have exception reports been submitted to the Department covering any of these shipments made more than 45 days ago?	✓		

920980256

7:26-9.3 Accumulation Time

How is waste accumulated on site?

(✓) Containers
( ) Tanks (greater than 90 days)
(complete HWMF (TSD) Facility Checklist)
( ) Tanks (less than 90 days)
( ) Above ground
( ) Below ground
( ) Surface impoundments
(complete HWMF (TSD) Facility Checklist)
( ) Piles (complete HWMF checklist)

		YES	NO	N/A
7:26-9.3(a)1	Is waste accumulated for more than 90 days?			✓

STOP HERE IF THE HAZARDOUS WASTE MANAGEMENT FACILITY (TSF) CHECKLIST IS FILLED OUT.

920980257

Short term accumulation standards for generators who accumulate waste in containers and tanks for 90 days or less:

		YES	NO	N/A
Containers				
7:26-9.4	What type of containers are used for storage. Describe size, type, quantity, and nature of waste (e.g. 12 fifty-five gallon drums of waste acetone).	—	—	—
7:26-9.4(d)2	Do the containers appear to be in good condition, not in danger of leaking?	✓	—	—
	If no, describe the problem (include number of containers involved.)			
7:26-9.4(d)4i	Are all containers securely closed except those in use?	✓	—	—
7:26-9.4(d)4iii	Do the containers appear to be properly handled or stored in a manner which will minimize the risk of the container rupturing and/or leaking?	✓	—	—
7:26-9.4(d)4iv	Are containerized hazardous wastes segregated in storage by waste type?	✓	—	—
7:26-9.4(d)4v	Is every container arranged so that its identification label is visible?	✓	—	—
7:26-9.4(d)5	Is the container storage area inspected at least daily?	—	✓	—
7:26-9.4(d)6	Are containers holding ignitable and reactive wastes located at least 50 (fifty) feet (15 meters) from the facilities property line?	✓	—	—
7:26-7.2(a)	Did the owner/operator conspicuously label appropriate manifest number on all hazardous waste containers that are intended for shipment?	✓	—	—
7:26-9.3(a)3	Is each container clearly dated with each period of accumulation so as to be visible for inspection?	✓	—	—

920980258

		YES	NO	N/A
7:26-7.2(b)	Did the owner/operator insure that all containers used to transport hazardous waste off site are in conformance with applicable DOT regulations? (49CFR 171, 179).	✓	—	—
Tanks (Less than 90 day storage)				
7:26-9.3(b)	Does the generator accumulate hazardous waste on-site in an above ground tank?	—	—	✓
	If yes, describe the tank(s): 1) Capacity _____ 2) Shell thickness _____ 3) Material Construction ____ 4) Age of tank _____			
7:26-9.3(b)	Does the generator have written approval from the Department to store hazardous waste(s) in this tank(s) for ninety days or less?	—	—	—
7:26-9.3(b)1	Does each tank(s) have sufficient shell thickness to ensure the tank will not collapse or rupture as specified by the Department?	—	—	—
7:26-9.3(b)4	Is the tank(s) designed so that at least 99% of the volume of each of the tanks can be emptied by direct pumping or drainage?	—	—	—
7:26-9.3(b)5	Is each tank(s) rendered empty (1% or less remaining) every 90 days or less?	—	—	—
7:26-9.3(b)6	Are all wastes removed from the tank(s) shipped off-site to an authorized facility or placed in an on-site, authorized facility?	—	—	—
7:26-9.3(b)8	If part of the tank is below grade, is it constructed to allow visual inspection of the tank, comparable to a totally above-ground tank and is is secondary containment provided for the below grade part?	—	—	—
7:26-10.5(c)1	Are materials which are incompatible with the material of construction of the tank(s) placed in the tank(s)?	—	—	—
7:26-10.5(c)2	Does the generator use appropriate controls and practices to prevent overfilling?	—	—	—

920980259

		YES	NO	N/A
7:26-10.5(c)2ii	For uncovered tanks, is there sufficient (two feet or acceptable documentation) freeboard to prevent overtopping by wave or wind action by or precipitation?			✓
7:26-9.3(b)3	Does each tank(s) or storage tank area have secondary containment?			
7:26-10.5(d)1	Is the containment system capable of collecting and holding spills, leaks, and precipitation?			
7:26-10.5(d)1i	Is the base underlying the tank(s) free from cracks, gaps, and sufficiently impervious to contain leaks, spills, and accumulated rainfall until the collected material is detected and removed?			
7.26-10.5(d)1i	Does the containment system consist of material compatible with the wastes being stored?			
7:26010.5(d)1ii	Is the containment system sloped or otherwise designed to efficiently drain and remove liquids resulting from leaks, spills and precipitation?			
7:26-10.5(d)1ii	Is the tank protected from contact with accumulated liquids?			
7:26-10.5(d)1v	Does the containment system have sufficient capacity to contain ten percent of the volume of all tanks or the volume of the largest tanks whichever is greater?			
7:26-10.5(d)2	Is run-on into the containment area prevented?			
	If not, explain.			
7:26-10.5(d)3	Is precipitation removed from the pump or collection area in a timely manner to prevent blockage or overflow of the collection system?			
7:26-10.5(d)4	Is spilled or leaked waste removed from the pump or collection area daily?			

920980260

		YES	NO	N/A
7:26-10.5(d)4i	If the collected material is hazardous waste under NJAC 7:26-8, it is managed as a hazardous waste in accordance with all applicable requirements of this chapter?			√
7:26-9.4(g)4	<u>Personnel Training</u> Have facility personnel successfully completed a program of classroom instruction or on-the-job training since six months after the date of their employment or assignment to the facility or to a new position at the facility?	√		
7:26-9.4(g)5	Has facility personnel taken part in an annual review of initial training?	√		
7:26-9.4(g)2	Is the program directed by a person trained in hazardous waste management procedures and does it include instruction which teaches facility personnel hazardous waste management procedures (including contingency plan to implementation) relevant to the positions in which they are employed?	√		
	Is there written documentation of the following:			
7:26-9.4(g)6i	Job title for each position at the facility related to hazardous waste management, and the name of the employee filling each job?	√		
7:26-9.4(g)6ii	A written job description for each position related to hazardous waste management?	√		
7:26-9.4(g)6iii	A written job description on the type and amount of both introductory and continuing training that has been and will be given to personnel in jobs related to hazardous waste management?	√		
7:26-9.4(g)6iv	Documentation of actual training or experience received by personnel?	√		
7:26-9.4(g)7	Are training records kept on all current employees until closure of the facility and training records kept on former employees for three years from their last date of employment?	√		

920980261

		YES	NO	N/A
7:26-9.6	Preparedness and prevention			
	Does the facility comply with preparedness and prevention requirements including maintaining:			
7:26-96(b)1	An internal communications or alarm system?	✓	—	—
7:26-9.6(b)2	A telephone or other device to summon emergency assistance from local authorities?	✓	—	—
7:26-9.6(b)3	Portable fire equipment, spill control equipment, and decontamination equipment?	✓	—	—
7:26-9.6(b)4	Water at adequate volume and pressure to supply water hose streams, or foam producing equipment, or automatic sprinklers, or water spray system?	✓	—	—
7:26-9.6(c)	Is equipment tested and maintained?	✓	—	—
7:26-9.6(d)1	Is there immediate access to communications or alarm systems during systems during handling of hazardous waste?	✓	—	—
7:26-9.6(e)	Adequate aisle space (18") to allow unobstructed movement of personnel fire protection equipment, spill control equipment and decontamination equipment?	✓	—	—
	If no, please explain.			
	In your opinion, do the types of waste on site require all of the above procedures, or are some not required?	✓	—	—
	Explain.			
7:26-9.6(f)	Has the facility made the following arrangements, as appropriate for the type waste handled on site:	—	—	—
7:26-9.6(f)1	Familiarize police, fire departments and emergency response teams with the layout of the facility and hazardous waste handled - associated hazardous places where facility personnel would normally be working, entrances and roads inside facility and possible evacuation routes.	✓	—	—

920980262

		YES	NO	N/A
7:26-9.6(f)2	Where more than one police and fire department might respond to an emergency, is there an agreement designating primary emergency authority to a specific police or fire department, and agreements with any others to provide support to the primary emergency authority? JERSEY CITY F.D. & P.D.			✓
7:26-9.6(f)3	Agreements with emergency response contractors, and equipment supplies? A.E.T.C. (primary)	✓		
7:26-9.6(f)4	Arrangements to familiarize local hospitals with the properties of hazardous waste handled at the facility and the types of injuries or illnesses which could result from fires, explosion, or discharges at the facility?	✓		
7:26-9.6(f)5	Arrangement with local fire departments to inspect the facility on a regular basis with at least two (2) inspections annually? last inspection 8/90.	✓		
7:26-9.6(f)6	If authorities identified in (f)1 through 5, above decline to enter into such arrangements, has the owner, or operator documented this refusal in the operating record.			✓
7:26-9.4(g)8	Are semi-annual drills conducted involving all employees and appropriate local authorities to test emergency response capabilities at the facility in accordance with the contingency plan and emergency procedures development pursuant to NJAC 7.26-9.7? LAST DRILL on 3/1/90. Had two drills in 1989 on 7/27 and 8/1/90.	✓		
7:26-9.4(g)8i	If no, did the owner or operator petition the Department for an exemption from the semi annual drills requirement?			✓
7:26-9.4(g)8ii	Did the owner or operator petition the Department for an exemption excluding some or all local officials in the semi annual drill requirements?		✓	
	If yes, did the owner operator provide those specific local officials with written approval of the exemption?			

920980263

		YES	NO	N/A
7:26-9.7	Contingency Plan and Emergency Procedures			
7:26-9.7(a)	Does the facility have a written contingency plan for emergency procedures designed to deal with fires, explosions, hazards to human health or environment, or any unplanned sudden or non-sudden release of hazardous waste or hazardous waste constituents into air, soil or surface water?	✓		
7:26-9.7(b)	Are provisions of the plan carried out immediately whenever there is a fire, explosion, or release of hazardous waste or hazardous waste constituents which could threaten human health or the environment?			✓
7:26-9.7(c)	Does the contingency plan describes the actions facility personnel shall take in response to fires, explosions, or any unplanned sudden or non-sudden release of hazardous waste or hazardous waste constituents to air, soil, or surface water at the facility?	✓		
7:26-9.7(d)	Did the owner or operator prepare a Spill Prevention, Control, and Countermeasures (SPCC) Plan in accordance with 40 CFR 112 or 300 or a Discharge Prevention Containment and Countermeasure (DPCC) Plan in accordance with N.J.A.C. 7:1E-4.1 et seq.			✓
	If yes, did the owner or operator amend that plan to incorporate hazardous waste management provisions that are sufficient to comply with the requirements of this section?			✓
7:26-9.7(e)	Does the plan describe arrangements agreed to by local police departments, fire departments, hospitals, contractors, and State and local emergency response teams to coordinate emergency services?	✓		

920980264

		YES	NO	N/A
7:26-9.7(f)	Does the plan list names, addresses, and phone numbers (office and home) of all persons qualified to act as emergency coordinator and is this list kept up to date? Where more than one person is listed, one shall be names as primary emergency coordinator and others shall be listed in the order in which they will assume responsibility as alternates?		✓	
7:26-9.7(g)	Does the plan include a list of all emergency equipment at the facility (such as fire extinguishing systems, spill control equipment, communications and alarm systems (internal and external) and decontamination equipment), where this equipment is required? Is the list up-to-date? In addition, does the plan include the location and physical description of each item on the list, and a brief outline of its capabilities?	✓		
7:26-9.7(h)	Does the plan include an evacuation procedure for facility personnel where there is a possibility that evacuation could be necessary? Does this plan describe signal(s) to be used to begin evacuation, evacuation routes, and alternative evacuation routes (in case where the primary routed could be blocked by releases of hazardous waste or fires)?	✓		
7:26-9.7(i)	Is a copy of the contingency plan and all revisions to the plan:			
	1. Maintained at the facility;	✓		
	2. Has the contingency plan been submitted to local authorities (police fire departments, emergency response teams)?	✓		
7:26-9.7(k)	Is there an employee on site or on call at all times with the responsibility of coordinating, all emergency response measures?	✓		

920980265

Inspector: [illegible]
Address: [illegible]
Telephone No: [illegible]

RCRA LAND DISPOSAL RESTRICTION
GENERATOR CHECKLIST

I. HANDLER IDENTIFICATION

PUBLIC SERVICE ELECTRIC & GAS — DUFFIELD and VAN KEURAN AVE.
A. Handler Name — B. Street (or other identifier)

JERSEY CITY, — N.J., — 07306 — HUDSON
C. City — D. State — E. Zip Code — F. County Name

GENERATE ELECTRICITY.
G. Nature of Business; Identification of Operations; SIC Code(s)

NJD 094961042
H. EPA ID #

FRANK CZIGLER (201) 330-6411.
I. Handler Contact (Name and Phone Number)

II. GENERATOR COMPLIANCE — Comments

A. Waste Identification

1. F-Solvents

a. Does the handler generate the following wastes?

(i) F001, F002, F004, or F005 — √ Yes ___ No

(ii) F003 — ___ Yes √ No

If an F003 wastestream (listed solely for ignitability) has been mixed with a non-restricted solid or hazardous waste, does the resultant mixture exhibit the ignitability characteristic? ___ Yes ___ No

b. Source of the above: Form 8700-12 ___; Part A ___; Part B ___; Biennial/Annual Reports √
other (specify) √ MSDS, WASTE PROFILE, MANIFEST CHECKLIST

Appendix A is intended to assist the inspector and enforcement official in determining whether the facility is generating F-solvent wastes, if such wastes were not identified by the facility previously. If you are concerned that F-solvent wastes may be misclassified or mislabeled, turn to Appendix A-1. To assist in identfying potentially

920980266

Handler Name: _____
ID Number: _____
Inspector: _____
Date: _____

Comments

misclassified F-solvents, Appendix A-2 presents a list of corresponding F and U wastes. Note concerns below: _____

2. Dioxin wastes

a. Does the handler report the generation of the folloving wastes? (The folloving industries may generate listed dioxin wastes: organic chemicals, pesticide or formulator.)

(i) F020 - F023, F026 - F027 ___Yes √No
(ii) F028 ___Yes √No

[F-solvent BDAT standards are presented as Appendix B]

3. California Waste Identification

a. Does the facility handle any of the folloving wastes?

(i) D002 √Yes √No
(ii) D004 - D011 (D007) √Yes ___No

Produced when turbine were cleaned. Chromium was found in levels just high enough to list waste as a D007 waste.

b. Does the generator handle any hazardous wastes characterized by high concentrations of halogenated organic constituents (HOCs), metals, or cyanides? ___Yes √No

[California waste standards are presented as Appendix C]

c. Is the generator handling any of the F, K, P, or U wastes subject to the "soft hammer" that may qualify as California wastes due to HOC, metals, or cyanide content? See Appendix D for a listing of California constituents likely to be found by waste code. ___Yes √No

d. Has the generator conducted the paint filter test (Method 9095) [§268.32(i)]?
DONE BY TSD √Yes ___No*

e. Has the generator conducted any testing of these hazardous wastes to determine whether the concentrations qualify the hazardous wastes as California wastes? √Yes ___No
DONE BY TSD
If no, has the generator retained records documenting his "applied knowledge" that the hazardous waste is not a California waste?
___Yes ___No

* A potential violation is indicated

920980267

Handler Name: _____
ID Number: _____
Inspector: _____
Date: _____

Comments

If "no" is answered to both parts of this question, a violation is indicated. [§268.7(a)]

Describe the nature of the records:

_____

f. Source of the above: Form 8700-12 ___; Part A ___; Part B ___; Biennial/Annual Report ✓; other (specify) ✓. WASTE PROFILE

4. First Third Waste Identification

a. Does the generator handle any of the wastes listed as First Third Wastes in §268.10? See Appendix E for listing. List First Third Wastes handled by the generator here: N/A

_____
_____
_____

b. Does the generator handle any soft-hammer wastes (Appendices D-1, D-2, and F)? If so, list those wastes:

_____
_____

c. Are any of the soft-hammered wastes California wastes (see Appendix G)? ___Yes ___No

If yes, the wastes must meet BDAT standards prior to disposal.

d. Has the Regional Administrator received demonstrations/certifications for all soft hammered wastes to be land disposed [§268.8(a)(2)]? ___Yes ___No*

e. Source of the above: Form 8700-12 ___; Part A ___; Part B ___; Biennial/Annual Report ___; other (specify) ___.

B. BDAT Treatability Group - Treatment Standards Identification

1. Does the generator mix restricted wastes with different treatment standards for constituents of concern? N/A ___Yes ___No

2. If yes, did the generator select the most stringent treatment standard for the constituent of concern [§268.41(b)]? ___Yes ___No*

* A potential violation is indicated

920980268

Handler Name: _____
ID Number: _____
Inspector: _____
Date: _____

Comments

3. F Solvents - -

a. Did the generator correctly determine the appropriate treatability group [§268.41] of the waste (e.g., wastewaters containing solvents, nonwastewater (i.e., < 1% TOC), pharmaceutical wastewaters containing spent methylene chloride, all other spent solvent wastes)?
√ Yes ___ No*

4. California Wastes

a. Did the generator correctly determine the distinction between liquid hazardous wastes and non-liquid hazardous wastes that contain HOCs in concentrations greater than 1,000 mg/kg [§268.32(h)]?
N/A
___ Yes ___ No*

5. First Third Wastes

a. Did the generator ascertain whether restricted wastes were appropriately assigned wastewater or nonwastewater designations (nonwastewaters are > 1% TOC and > 1% suspended solids) [§268.7(c)]?
N/A
___ Yes ___ No*

b. Does the facility handle K061 wastes?
___ Yes ___ No

If yes, were nonwastewaters appropriately classified in either the high or low zinc subcategories (≥15% Zn) [§268.7(a)] [§268.41(a)]?
___ Yes ___ No*

c. Does the facility handle K101 or K102 wastes?
___ Yes ___ No

If yes, were nonwastewaters appropriately classified in either the high or low arsenic subcategories [§268.7(a)] [§268.41(a)]?
___ Yes ___ No*

d. Is there any reason to believe that the generator may have diluted the waste to change the applicable treatment standard (based on review of process operation, pipe routing, point of sampling)?
___ Yes ___ No

* A potential violation is indicated

920980269

Handler Name: _____
ID Number: _____
Inspector: _____
Date: _____

Comments

C. Waste Analysis - -

1. Did the generator determine whether the waste exceeds treatment standards based on §268.7(a):

a. Knowledge of wastes ✓ Yes ___ No

(i) List wastes for which "applied knowledge" was used: 1,1,1-TRICHLOROETHANE

b. TCLP ___ Yes ___ No

(i) List wastes for which "TCLP" was used: N/A

(ii) Appendix D lists wastes for which treatment standards are expressed as concentrations in waste extract. Were any wastes handled by the generator subject to waste extract standards not tested using the TCLP? ___ Yes ___ No

If yes, list: _____

c. Total waste analysis ✓ Yes ___ No

d. If files were retained, describe content and basis of applied knowledge determination: N/A

If determined by TCLP or total constituent analysis, provide date of last test, frequency of testing, and attach test results.

Dates/frequency: _____

Note which wastes were subjected to which tests:

Note any problems (e.g., inadequate analysis, variation of waste composition/generation for applied knowledge) _____

-/ A potential violation is indicated

920980270

Handler Name: _____
ID Number: _____
Inspector: _____
Date: _____

Comments

e. Were wastes tested using TCLP or total constituent analysis when a process or wastestream changed [§264.13(a)(3)(i) or §265.13(a)(3)(i)]? N/A
__Yes __No*

2. Did the restricted wastes exceed applicable treatability group treatment standards upon generation [§268.7(a)(1)]?

List those that exceeded standards: 1,1,1 TRICHLORODETHANE

List those that did not exceed standards: _____

3. Did the generator dilute the waste or the treatment residual so as to substitute for adequate treatment [§268.3] __Yes* √No

D. Management

1. Onsite management

a. Were restricted wastes managed onsite? __Yes √No

If no, go to "2".

b. For wastes that exceed treatment standards, was treatment in regulated units, storage for greater than 90 days, and/or disposal conducted? N/A
__Yes __No

If yes, TSDF checklist must be completed.

2. Offsite Management

a. If restricted wastes exceed treatment standards, did generator provide treatment facility notification with each shipment? [268.7(a)(1)]:

(i) EPA Hazardous Waste Number? √Yes __No*

(ii) Corresponding treatment standard? √Yes __No*

(iii) Manifest number? √Yes __No*

(iv) Waste analysis, if available? √Yes __No

*/ A potential violation is indicated

920980271

Handler Name: _____
ID Number: _____
Inspector: _____
Date: _____

Comments

Identify offsite treatment facilities ADVANCED ENVIRONMENTAL TECHNOL CO.; DUPONT E.I. CHAMBER WORKS.

b. If restricted vastes do not exceed treatment standards, did generator provide the disposal facility with a notice and certification including: N/A

(i) EPA hazardous vaste I.D. number? ___Yes ___No*

(ii) Corresponding treatment standard? ___Yes ___No*

(iii) Manifest number ___Yes ___No*

(iii) Certification regarding vaste and that it meets treatment standards? ___Yes ___No*

Identify land disposal facilities receiving the BDAT certified vastes _____

c. If the generator's vaste is subject to a §268.5 case by case exemption, a §268.6 "no migration" exemption, or a nationvide variance (see Appendix E for restricted vastes subject to nationvide variances), does the generator's records indicate that he or she submits with each waste shipment [§268.7(a)(3)]:

(i) EPA Hazardous Vaste Number? ___Yes ___No*

(ii) Corresponding Treatment Standards? ___Yes ___No*

(iii) All applicable prohibitions? ___Yes ___No*

(iv) The manifest number? ___Yes ___No*

(v) The date the vastes are subject to prohibitions? ___Yes ___No*

(vi) Does generator keep records of all notifications/certifications send to offsite facilities? ___Yes ___No*

*/ A potential violation is indicated

920980272

Handler Name: _____
ID Number: _____
Inspector: _____
Date: _____

Comments

List all prohibited wastes for which records are not provided per above [§268.7(a)(b):

_____ N/A

_____

Identify TSDFs receiving any prohibited wastes subject to any exemptions and variances:

_____

_____

d. If handler generates a "soft hammer" waste, does the generator send with each "soft hammer" waste shipment to a TSDF and retain copies of, a notice that includes [268.7(a)(4)]:

The EPA Hazardous Waste Number? ___Yes ___No*

Applicable prohibitions? ___Yes ___No*

The manifest number? ___Yes ___No*

Waste analysis data, where available? ___Yes ___No

(i) Do the generator's records indicate that any soft-hammer wastes are destined for disposed in a landfill or surface impoundment [§268.33(f)]? ___Yes ___No

If yes, list facility of destination and waste of concern [§268.8(a)(2)]

_____

_____

(ii) Has the generator submitted demonstrations and certifications for each "soft-hammered" waste destined to be disposed in landfill or surface impoundment to the Regional Administrator prior to the shipment of waste to the TSDF [§268.7(a)(2)]? ___Yes ___No*

(iii) Has the generator retained a copy of the demonstration on site [§268.8(a)(3)-(a)(4)]? ___Yes ___No*

(iv) Has the generator retained copies of all §268.8 certifications sent to the TSDF [§268.7(a)(6)] ___Yes ___No*

* A potential violation is indicated

920980273

Handler Name: _____
ID Number: _____
Inspector: _____
Date: _____

Comments

(v) Did the generator submit the demonstration to the receiving facility upon the intial shipment of the waste [§268.8(a)(3)-(a)(4)]? ___Yes ___No* N/A

(vi) If the Regional Administrator has invalidated the certification, has the generator ceased shipment of the vaste and do records indicate that the generator has informed all receiving facilities of the invalidation [§268.8(b)(3)]?
___Yes ___No*

E. Storage of Prohibited Vaste

1. Were prohibited vastes stored for greater than 90 days? ___Yes ✓No

If yes, vas facility operating as a TSD under interim status or final permit [§262.34(b)]?
___Yes ___No*

If yes, TSDF Checklist must be completed.

F. Treatment Using RCRA 264/265 Exempt Units or Processes (i.e., boilers, furnaces, distillation units, wastewater treatment tanks, etc.)

1. Were treatment residuals generated from RCRA 264/265 exempt units or processes? ___Yes ✓No

If yes, list type of treatment unit and processes
_____
_____
_____

If yes, TSDF checklist must be completed.

*/ A potential violation is indicated

920980274

APPENDIX A

SOLVENT IDENTIFICATION CHECKLIST

1. Does the handler generate any of the following F001 constituents (i.e., spent halogenated solvents used in degreasing) as a result of being used in the process either in pure form or commercial grade?

tetrachloroethylene	___Yes	√/No
trichloroethylene	___Yes	√/No
methylene chloride	√/Yes	√/No
1,1,1-trichloroethane	*√/Yes	___No
carbon tetrachloride	___Yes	√/No
chlorinated fluorocarbons	___Yes	√/No

2. Does the handler generate any of the following F002 constituents (i.e., spent halogenated solvents) as a result of being used in the process either in pure form or commercial grade?

tetrachloroethylene	___Yes	√/No
trichloroethylene	___Yes	√/No
methylene chloride	___Yes	√/No
1,1,1-trichloroethane	___Yes	√/No
chlorobenzene	___Yes	√/No
trichlorofluoromethane	___Yes	√/No
1,1,2-trichloro-1,2,2-trifluoroethane	___Yes	√/No
ortho-dichlorobenzene	___Yes	√/No

3. Does the handler generate any of the following F003 constituents (i.e., spent nonhalogenated solvents) as a result of being used in the process either in pure form or commercial grade?

xylene	___Yes	√/No
acetone	___Yes	√/No
ethyl acetate	___Yes	√/No
ethyl benzene	___Yes	√/No
ethyl ether	___Yes	√/No
methyl isobutyl ketone	___Yes	√/No
n-butyl alcohol	___Yes	√/No
cyclohexanone	___Yes	√/No
methanol	___Yes	√/No

If the F003 waste stream has been mixed with a solid waste, does the resultant mixture exhibit the ignitability characteristic? ___Yes √/No

920980275

4. Does the handler generate any of the following F004 constituents (i.e., spent nonhalogenated solvents) as a result of being used in the process either in pure form or commercial grade?

cresols and cresylic acid	___Yes	√ No
nitrobenzene	___Yes	√ No

5. Does the handler generate any of the following F005 constituents (i.e., spent nonhalogenated solvents) as a result of being used in the process either in pure form or commercial grade?

toluene	___Yes	√ No
methyl ethyl ketone	___Yes	√ No
carbon disulfide	___Yes	√ No
isobutanol	___Yes	√ No
pyridine	___Yes	√ No

6. Are any of the constituents listed in questions 1 through 5 used for their "solvent" properties -- that is to solubilize (dissolve) or mobilize other constituents? The following questions will be helpful in confirming this determination.

(a) Are the constituents used as chemical carriers?
___Yes √ No

If yes, list the constituents.

_____

_____

(b) Are the constituents used for degreasing/cleaning?
√ Yes ___No

If yes, list the constituents.

1,1,1 - TRICHLOROETHANE used in small amounts in machine shop in form of spray can.

(c) Are the constituents used as diluents?
___Yes √ No

If yes, list the constituents.

_____

_____

(d) Are the constituents used as extractants?
___Yes √ No

920980276

If yes, list the constituents.

_____

_____

(e) Are the constituents used for fabric scouring?
___Yes ___√No

If yes, list the constituents.

_____

_____

(f) Are the constituents used as reaction and synthesis media?
___Yes ___√No

If yes, list the constituents.

_____

_____

If the responses to questions 1 through 6 led the inspector to believe that the waste may be an F-solvent, answer question 7.

7. Are any of the above constituents spent solvents? (A solvent is considered "spent" when it has been used and is no longer usable without being regenerated, reclaimed, or otherwise reprocessed.) ___Yes ___No

8. If the waste is a mixture of constituents as determined in questions 1 through 6, give the concentration before use of all the constituents in the solvent mixture/blend. For example:

5%	methylene chloride
2%	trichloroethylene
25%	1,1,1-trichloroethane
68%	mineral spirits
100%	

If the waste stream is a mixture containing a total of 10% or more (by volume) of one or more of the F001, F002, F004, or F005 listed constituents before use, it is a listed waste.

With respect to the F003 solvent wastes, if, before use, the waste stream is mixed and contains only F003 constituents, it is a listed waste. For example:

33%	acetone
16%	methanol
51%	ethyl ether
100%	

920930277

If the waste stream is a mixture containing F003 constituents and a total of 10% or more of one or more of the F001, F002, F004, and F005 listed constituents before use, it is a listed waste. For example:

50%	xylene (F003)
12%	TCE (F001)
38%	mineral spirits
100%	

If in light of the above, the handler appears to be generating F001 - F005 hazardous wastes, refer this facility to the enforcement official for followup actions verifying the use of solvents at the facility.

920980278

APPENDIX B
TREATMENT STANDARDS FOR F-SOLVENTS

F001-F005 SPENT SOLVENTS	CONCENTRATION (IN MG/L) WASTEWATERS	OTHER WASTES
Acetone	0.05	0.59
N-butyl	5.0	5.0
Carbon disulfide	1.05	4.81
Carbon tetrachloride	.05	.96
Chlorobenzene	.15	.05
Cresols (and cresylic acid)	2.82	.75
Cycohexanone	.125	.75
1,2-dichlorobenzene	.65	.125
Ethyl acetate	.05	.75
Ethyl benzene	.05	.053
Ethyl ether	.05	.75
Isobutanol	5.0	5.0
Methanol	.25	.75
Methylene chloride	.20	.96
Methylene chloride (from the pharmaceutical industry)	12.7	.96
Methyl ethyl ketone	0.05	0.75
Methyl isobutyl ketone	0.05	.33
Nitrobenzene	0.66	0.125
Pyridine	1.12	0.33
Tetrachloroethylene	0.079	0.05
Toluene	1.12	0.33
1,1,1-Trichloroethane	1.05	0.41
1,2,2-Trichlor 1,2,2-trifluoroethane	1.05	0.96
Trichloroethylene	0.062	0.091
Trichlorofluoromethane	0.05	0.96
Xylene	0.05	0.15

920980279

Computer Printout of

Manifest Activity

920980280

0

GENERATOR	TSDF	MANIFEST	DATE SHIPPED	WASTE CODE	WASTE NAME	QUANTITY
- PSE&G-HUDSON GEN STA DUFFIELD AND VAN KEUREN JERSEY CITY , NJ NJD094961842	ADVANCED ENV TECNOLOGY CORP EDEN LANE MOUNT OLIVE , NJ NJD980536593	NJA0633833	04/26/89	F001	SPT HAL SOLVt&SLUDG DEGREAS OPE	800 P
				X726	OIL/HT/ MRK,TURBN,DESEL,QUENCH	800 P
		NJA0754347	12/08/89	F001	SPT HAL SOLVt&SLUDG DEGREAS OPE	800 P
		NJA0755885	09/22/89	U133	HYDRAZINE (R,T)	150 P
		NJA0755911	09/05/89	F001	SPT HAL SOLVt&SLUDG DEGREAS OPE	800 P
		NJA0836887	04/26/90	F001	SPT HAL SOLVt&SLUDG DEGREAS OPE	2400 P
				X726	OIL/HT/ MRK,TURBN,DESEL,QUENCH	5200 P
0	ADVANCED ENVIRONMENTAL TECH 520 SPEEDWELL AVENUE MORRIS PLAINS , NJ NJD088631369	NJA0482267	02/01/89	F001	SPT HAL SOLVt&SLUDG DEGREAS OPE	1600 P

920980281

	CALLEIA BROS NC 360 MASPETH AVE BROOKLYN , NY NYD986647203	NYA5954984	11/18/87	X722	WAST OIL/BTM RES/COMM TANK CLN	400 G
		NYA6242885	11/22/88	X722	WAST OIL/BTM RES/COMM TANK CLN	1700 G
		NYA7514397	09/09/88	X722	WAST OIL/BTM RES/COMM TANK CLN	4200 G
	CECOS INTERNATIONAL INC , NY NYD088336241	NYA5633955	11/10/87	X725	OIL SPILL CLEANUP MATERIAL	25 CY
		NYA5633964	08/10/87	X725	OIL SPILL CLEANUP MATERIAL	25 CY
		NYA5634036	07/01/88	X725	OIL SPILL CLEANUP MATERIAL	25 CY
		NYA5634045	04/30/87	X725	OIL SPILL CLEANUP MATERIAL	25 CY
		NYA5634351	04/29/87	X725	OIL SPILL CLEANUP MATERIAL	15 CY
		NYA5634369	03/24/87	X725	OIL SPILL CLEANUP MATERIAL	25 CY
		NYA5898258	05/09/88	X725	OIL SPILL CLEANUP MATERIAL	25 CY

GENERATOR	TSDF	MANIFEST	DATE SHIPPED	WASTE CODE	WASTE NAME	QUANTITY
- PSE&G-HUDSON GEN STA DUFFIELD AND VAN KEUREN JERSEY CITY , NJ NJD094961042	CECOS INTERNATIONAL INC , NY NYD088336241	NYA5898267	04/05/88	X725	OIL SPILL CLEANUP MATERIAL	25 CY
		NYA5898276	05/09/88	X725	OIL SPILL CLEANUP MATERIAL	25 CY
		NYA5898285	09/27/88	X725	OIL SPILL CLEANUP MATERIAL	25 CY
		NYA5898294	04/05/88	X725	OIL SPILL CLEANUP MATERIAL	25 CY
		NYA5898303	04/05/88	X725	OIL SPILL CLEANUP MATERIAL	25 CY
		NYA5898312	04/05/88	X725	OIL SPILL CLEANUP MATERIAL	25 CY
		NYA5898321	05/05/88	X725	OIL SPILL CLEANUP MATERIAL	25 CY
		NYA5898339	04/05/88	X725	OIL SPILL CLEANUP MATERIAL	25 CY
		NYA5898348	05/12/88	X725	OIL SPILL CLEANUP MATERIAL	15 CY
		NYA6129738	03/24/87	X725	OIL SPILL CLEANUP MATERIAL	25 CY
		NYA6130368	03/30/88	X725	OIL SPILL CLEANUP MATERIAL	20 CY
		NYA6130377	03/30/88	X725	OIL SPILL CLEANUP MATERIAL	20 CY
		NYA6130386	04/07/88	X725	OIL SPILL CLEANUP MATERIAL	25 CY
		NYA6130395	04/08/88	X725	OIL SPILL CLEANUP MATERIAL	25 CY
		NYA6130404	04/08/88	X725	OIL SPILL CLEANUP MATERIAL	25 CY
		[illegible]	[illegible]	[illegible]	[illegible]	[illegible]

GENERATOR	TSDF	MANIFEST	DATE SHIPPED	WASTE CODE	WASTE NAME	QUANTITY
		NYA6130474	07/12/88	X725	OIL SPILL CLEANUP MATERIAL	25 CY
		NYA6130503	04/14/88	X725	OIL SPILL CLEANUP MATERIAL	25 CY
		NYA6130512	02/04/88	X725	OIL SPILL CLEANUP MATERIAL	25 CY
		NYA6130539	04/04/88	X725	OIL SPILL CLEANUP MATERIAL	25 CY
		NYA6130548	04/04/88	X725	OIL SPILL CLEANUP MATERIAL	25 CY
		NYA6130557	04/04/88	X725	OIL SPILL CLEANUP MATERIAL	25 CY
- PSE&G-HUDSON GEN STA DUFFIELD AND VAN KEUREN JERSEY CITY , NJ NJD094961042	CECOS INTERNATIONAL INC , NY NYD000336241	NYA6130566	03/31/88	X725	OIL SPILL CLEANUP MATERIAL	25 CY
		NYA6130575	03/31/88	X725	OIL SPILL CLEANUP MATERIAL	25 CY
		NYA6130584	04/07/88	X725	OIL SPILL CLEANUP MATERIAL	25 CY
		NYA6130593	04/07/88	X725	OIL SPILL CLEANUP MATERIAL	25 CY
		NYA6130611	04/07/88	X725	OIL SPILL CLEANUP MATERIAL	25 CY
		NYA6130629	03/30/88	X725	OIL SPILL CLEANUP MATERIAL	20 CY
	CHEMICAL WST MANAGEMENT INC PO BOX 55 EMELLE , AL ALD000622464	AL00493856	12/18/89	X910	CHEMICAL PROCESS-SOLID,NOS	43040 P
		AL00493876	12/15/89	X910	CHEMICAL PROCESS-SOLID,NOS	43000 P
		AL00493877	12/15/89	X910	CHEMICAL PROCESS-SOLID,NOS	50040 P
		AL00493878	12/15/89	X910	CHEMICAL PROCESS-SOLID,NOS	50080 P
		AL00493879	12/15/89	X910	CHEMICAL PROCESS-SOLID,NOS	48940 P
		AL00493880	12/15/89	X910	CHEMICAL PROCESS-SOLID,NOS	37520 P
		AL00493881	12/15/89	X910	CHEMICAL PROCESS-SOLID,NOS	46000 P
		AL00493882	12/15/89	X910	CHEMICAL PROCESS-SOLID,NOS	47800 P
		AL00493883	12/15/89	X910	CHEMICAL PROCESS-SOLID,NOS	46000 P
		AL00493884	12/15/89	X910	CHEMICAL PROCESS-SOLID,NOS	46000 P
		AL00493885	12/15/89	X910	CHEMICAL PROCESS-SOLID,NOS	41920 P
		AL00493886	12/18/89	X910	CHEMICAL PROCESS-SOLID,NOS	39840 P
		AL00493888	12/18/89	X910	CHEMICAL PROCESS-SOLID,NOS	41300 P
		AL00493889	12/18/89	X910	CHEMICAL PROCESS-SOLID,NOS	42500 P
		[illegible]	[illegible]	X910	CHEMICAL PROCESS-SOLID,NOS	45140 P

GENERATOR	TSDF	MANIFEST	DATE SHIPPED	WASTE CODE	WASTE NAME	QUANTITY
- PSE&G-HUDSON GEN STA DUFFIELD AND VAN KEUREN JERSEY CITY , NJ NJD094961042	CHEMICAL WST MANAGEMENT INC PO BOX 55 EMELLE , AL ALD000622464	AL00493891	12/18/89	X910	CHEMICAL PROCESS-SOLID,NOS	42220 P
		AL00493892	12/18/89	X910	CHEMICAL PROCESS-SOLID,NOS	39020 P
		AL00493894	12/18/89	X910	CHEMICAL PROCESS-SOLID,NOS	43180 P
	CWM CHEMICAL SERVICES INC PO BOX 200 MODEL CITY , NY NYD049836679	NYA7479513	09/06/89	X910	CHEMICAL PROCESS-SOLID,NOS	19980 P
		NYA7479819	09/06/89	X910	CHEMICAL PROCESS-SOLID,NOS	34600 P
		NYA7972893	09/06/89	X910	CHEMICAL PROCESS-SOLID,NOS	28860 P
	CYCLE CHEM INC 217 SOUTH FIRST STREET ELIZABETH , NJ NJD002200846	NJA0400698	03/07/88	X726	OIL/MT/ WRK,TURBN,DESEL,QUENCH	60 G
				X725	OIL SPILL CLEANUP MATERIAL	000 P
	DUPONT E I CHAMBERS WORKS CARNEYS POINT DEEPWATER , NJ NJD002385736	NJA0754228	12/04/89	D007	CHROMIUM	5000 G
		NJA0754229	12/12/89	D007	CHROMIUM	5419 G
		NJA0754230	12/07/89	D007	CHROMIUM	4615 G
		NJA0754231	12/12/89	D007	CHROMIUM	5498 G
		NJA0754232	12/13/89	D007	CHROMIUM	5278 G
		NJA0754233	12/18/89	D007	CHROMIUM	5200 G
		NJA0754236	12/13/89	D007	CHROMIUM	5091 G
		NJA0754237	12/13/89	D007	CHROMIUM	5525 G
		NJA0754238	12/13/89	D007	CHROMIUM	5000 G

GENERATOR	TSDF	MANIFEST	DATE SHIPPED	WASTE CODE	WASTE NAME	QUANTITY
- PSE&G-HUDSON GEN STA DUFFIELD AND VAN KEUREN JERSEY CITY , NJ NJD094961042	DUPONT E I CHAMBERS WORKS CARNEYS POINT DEEPWATER , NJ NJD002385736	NJA0754239	12/12/89	D007	CHROMIUM	5090 G
		NJA0754240	12/07/89	D007	CHROMIUM	5312 G
		NJA0754241	12/07/89	D007	CHROMIUM	4874 G

NJA0754242	12/07/89	D007	CHROMIUM	5300 G
NJA0754244	12/07/89	D007	CHROMIUM	5364 G
NJA0756254	12/08/89	D007	CHROMIUM	5500 G
NJA0756255	12/08/89	D007	CHROMIUM	5050 G
NJA0756257	12/08/89	D007	CHROMIUM	5086 G
NJA0756258	12/08/89	D007	CHROMIUM	5365 G
NJA0756259	12/08/89	D007	CHROMIUM	5311 G
NJA0756260	12/09/89	D007	CHROMIUM	4949 G
NJA0756261	12/08/89	D007	CHROMIUM	5221 G
NJA0756262	12/08/89	D007	CHROMIUM	5365 G
NJA0756263	12/09/89	D007	CHROMIUM	5300 G
NJA0756264	12/09/89	D007	CHROMIUM	5357 G
NJA0756265	12/09/89	D007	CHROMIUM	5500 G
NJA0756266	12/09/89	D007	CHROMIUM	5300 G
NJA0756267	12/09/89	D007	CHROMIUM	5300 G
NJA0756268	12/09/89	D007	CHROMIUM	5000 G
NJA0756269	12/09/89	D007	CHROMIUM	4800 G
NJA0756270	12/10/89	D007	CHROMIUM	5963 G
NJA0756271	12/10/89	D007	CHROMIUM	5629 G

GENERATOR	TSDF	MANIFEST	DATE SHIPPED	WASTE CODE	WASTE NAME	QUANTITY
- PSE&G-HUDSON GEN STA DUFFIELD AND VAN KEUREN JERSEY CITY , NJ NJD094961042	DUPONT E I CHAMBERS WORKS CARNEYS POINT DEEPWATER , NJ NJD002385730	NJA0756272	12/10/89	D007	CHROMIUM	5540 G
		NJA0756273	12/10/89	D007	CHROMIUM	5650 G
		NJA0756274	12/10/89	D007	CHROMIUM	5500 G
		NJA0756292	12/14/89	D007	CHROMIUM	5525 G
		NJA0756293	12/14/89	D007	CHROMIUM	4551 G
		NJA0826127	02/18/90	D007	CHROMIUM	5307 G
		NJA0826128	02/18/90	D007	CHROMIUM	5025 G
		NJA0826129	02/18/90	D007	CHROMIUM	5204 G
		NJA0826130	02/18/90	D007	CHROMIUM	5000 G

NJA0826132	02/18/90	D007	CHROMIUM		5500 G
NJA0826133	02/18/90	D007	CHROMIUM		4600 G
NJA0826134	02/18/90	D007	CHROMIUM		5089 G
NJA0826135	02/18/90	D007	CHROMIUM		5500 G
NJA0826136	02/19/90	D007	CHROMIUM		5419 G
NJA0826137	02/19/90	D007	CHROMIUM		5307 G
NJA0826138	02/19/90	D007	CHROMIUM		5286 G
NJA0826139	02/19/90	D007	CHROMIUM		4826 G
NJA0826140	02/19/90	D007	CHROMIUM		5136 G
NJA0826141	02/19/90	D007	CHROMIUM		4997 G
NJA0826142	02/19/90	D007	CHROMIUM		5645 G
NJA0826143	02/19/90	D007	CHROMIUM		5386 G
NJA0826145	02/21/90	D007	CHROMIUM		2430 G

GENERATOR: - PSE&G-HUDSON GEN STA, DUFFIELD AND VAN KEUREN, JERSEY CITY , NJ — NJD094961842

TSDF: DUPONT E I CHAMBERS WORKS, CARNEYS POINT, DEEPWATER , NJ — NJD002385736

MANIFEST	DATE SHIPPED	WASTE CODE	WASTE NAME	QUANTITY
NJA0826146	02/20/90	D007	CHROMIUM	3500 G
NJA0826147	02/20/90	D007	CHROMIUM	5000 G
NJA0826148	02/20/90	D007	CHROMIUM	5000 G
NJA0826149	02/19/90	D007	CHROMIUM	4971 G
NJA0826150	02/19/90	D007	CHROMIUM	5100 G
NJA0826151	02/20/90	D007	CHROMIUM	5100 G
NJA0826152	02/20/90	D007	CHROMIUM	4920 G
NJA0826153	02/20/90	D007	CHROMIUM	5190 G
NJA0826154	02/20/90	D007	CHROMIUM	5008 G
NJA0826155	02/20/90	D007	CHROMIUM	5500 G
NJA0826156	02/20/90	D007	CHROMIUM	5000 G
NJA0826158	02/20/90	D007	CHROMIUM	5000 G
NJA0826161	02/19/90	D007	CHROMIUM	5136 G
NJA0826162	02/19/90	D007	CHROMIUM	5190 G

	NJA0826164	02/19/90	D007	CHROMIUM	5052 G
	NJA0826165	02/19/90	D00.	CHROMIUM	5000 G
	NJA0826167	02/23/90	D007	CHROMIUM	1914 G

ENSCO INC
AMERICA ROAD
EL DORADO , AR
ARD069748192

AR00164351	06/15/87	X387	POLYCHLORINATED BIPHENYL,N O S	34400 P
AR00164352	06/15/87	X387	POLYCHLORINATED BIPHENYL,N O S	34940 P

NEW JERSEY DEPARTMENT OF ENVIRONMENTAL PROTECTION — PAGE 25
DIVISION OF HAZARDOUS WASTE MANAGEMENT
WASTE MANIFESTS FROM 01/01/87 TO 08/21/90
FROM GENERATOR NJD094961042 TO SPECIFIED TSDF'S

GENERATOR
- PSE&G-HUDSON GEN STA
DUFFIELD AND VAN KEUREN
JERSEY CITY , NJ
NJD094961042

TSDF	MANIFEST	DATE SHIPPED	WASTE CODE	WASTE NAME	QUANTITY
ENSCO INC AMERICA ROAD EL DORADO , AR ARD069748192	AR00164353	06/15/87	X387	POLYCHLORINATED BIPHENYL,N O S	35000 P
	AR00164354	06/15/87	X387	POLYCHLORINATED BIPHENYL,N O S	33860 P
	AR00164355	06/18/87	X387	POLYCHLORINATED BIPHENYL,N O S	35360 P
	AR00164356	06/18/87	X387	POLYCHLORINATED BIPHENYL,N O S	26480 P
	AR00164395	12/04/87	X387	POLYCHLORINATED BIPHENYL,N O S	4101 P
			X387	POLYCHLORINATED BIPHENYL,N O S	900 P
	AR00164396	12/04/87	X387	POLYCHLORINATED BIPHENYL,N O S	1420 P
			X387	POLYCHLORINATED BIPHENYL,N O S	1400 G

FRONTIER CHEMICAL WASTE
4626 ROYAL AVE
NIAGRA FALLS , NY
NYD043815703

NYA6191064	01/17/89	D001	CHARACTERISTIC OF IGNITABILITY	3000 P
NYA7618482	02/23/89	X722	WAST OIL/BTM RES/COMM TANK CLN	200 G

MARISOL INC
125 FACTORY LANE
MIDDLESEX , NJ
NJD002454544

NJA0757325	03/13/90	X726	OIL/MT/ WRK,TURBN,DESEL,QUENCH	4750 G
NJA0825742	02/06/90	X726	OIL/MT/ WRK,TURBN,DESEL,QUENCH	2047 G
NJA0825941	02/13/90	X726	OIL/MT/ WRK,TURBN,DESEL,QUENCH	2780 G
NJA0825978	02/23/90	X726	OIL/MT/ WRK,TURBN,DESEL,QUENCH	3471 G
NJA0825979	02/23/90	X726	OIL/MT/ WRK,TURBN,DESEL,QUENCH	3300 G
NJA0826116	02/13/90	X726	OIL/MT/ WRK,TURBN,DESEL,QUENCH	4725 G
NJA0900745	04/24/90	X726	OIL/MT/ WRK,TURBN,DESEL,QUENCH	2000 G

PETROCON CORP
W/S UNION ST
MODENA , PA
PAD051399517

PAB4000141	06/17/87	X727	WASTE OIL ELECTRI TRANSFORMERS	3200 G

920980287

FROM GENERATOR NJD094961042 TO SPECIFIED TSDF'S

GENERATOR	TSDF	MANIFEST	DATE SHIPPED	WASTE CODE	WASTE NAME	QUANTITY
PSE&G-HUDSON GEN STA DUFFIELD AND VAN KEUREN JERSEY CITY , NJ	PETROCON CORP W/S UNION ST MODENA , PA					
NJD094961042	PAD051399517	PAB4088885	07/07/87	X727	WASTE OIL ELECTRI TRANSFORMERS	3150 G
		PAB4088981	06/17/87	X727	WASTE OIL ELECTRI TRANSFORMERS	3100 G
		PAB4089224	06/16/87	X727	WASTE OIL ELECTRI TRANSFORMERS	3000 G
		PAB4089235	06/16/87	X727	WASTE OIL ELECTRI TRANSFORMERS	3200 G
		PAB4089246	06/17/87	X727	WASTE OIL ELECTRI TRANSFORMERS	6500 G
		PAB4089250	06/16/87	X727	WASTE OIL ELECTRI TRANSFORMERS	6200 G
		PAB4089375	06/18/87	X727	WASTE OIL ELECTRI TRANSFORMERS	3200 G
		PAB4089386	07/07/87	X727	WASTE OIL ELECTRI TRANSFORMERS	3200 G
		PAB4089390	06/18/87	X727	WASTE OIL ELECTRI TRANSFORMERS	3200 G
		PAB4089401	06/18/87	X727	WASTE OIL ELECTRI TRANSFORMERS	5800 G
		PAB4581674	07/14/87	X722	WAST OIL/BTM RES/COMM TANK CLN	2750 G
G	PETROLEUM RECYCLING INC CENCO BLVD BOX 275 CLAYTON , NJ NJD981133150	NJA0524630	04/17/89	X722	WAST OIL/BTM RES/COMM TANK CLN	5000 G
		NJA0541320	01/19/89	X722	WAST OIL/BTM RES/COMM TANK CLN	3750 G
G	ROLLINS ENVIRONMENTAL SERV P O BOX 337 BRIDGEPORT , NJ NJD053288239	NJA0415301	05/26/88	D001	CHARACTERISTIC OF IGNITABILITY	330 G
G	WASTE CONVERSION 2869 SANDSTONE DRIVE HATFIELD , PA PAD085690592	PAB4656223	12/16/88	X725	OIL SPILL CLEANUP MATERIAL	25 CY
		PAB4656245	02/06/89	X725	OIL SPILL CLEANUP MATERIAL	20 CY

NEW JERSEY DEPARTMENT OF ENVIRONMENTAL PROTECTION
DIVISION OF HAZARDOUS WASTE MANAGEMENT
WASTE MANIFESTS FROM 01/01/87 TO 08/21/90
FROM GENERATOR NJD094961042 TO SPECIFIED TSDF'S

GENERATOR	TSDF	MANIFEST	DATE SHIPPED	WASTE CODE	WASTE NAME	QUANTITY
PSE&G-HUDSON GEN STA DUFFIELD AND VAN KEUREN JERSEY CITY , NJ NJD094961042	WASTE CONVERSION 2869 SANDSTONE DRIVE HATFIELD , PA PAD085690592	PAB4656260	07/05/89	X725	OIL SPILL CLEANUP MATERIAL	20 CY
		PAB4656271	05/05/89	X725	OIL SPILL CLEANUP MATERIAL	20 CY
		PAB4656304	03/15/89	X725	OIL SPILL CLEANUP MATERIAL	20 CY
		PAC0383040	09/19/89	X725	OIL SPILL CLEANUP MATERIAL	20 CY

PAC1011850 02/01/90 X725 OIL SPILL CLEANUP MATERIAL 28 CY

PAC1564603 11/16/89 X725 OIL SPILL CLEANUP MATERIAL 28 CY

0 488 WORK FILE RECORDS READ
564 ITEMS RECORDS READ

920980289

920980290

FILE #: 09-06-18

NEW JERSEY DEPARTMENT OF ENVIRONMENTAL PROTECTION
SOLID AND HAZARDOUS WASTE ENFORCEMENT
BUREAU: North

GENERATOR INSPECTION REPORT

FACILITY INFORMATION

FACILITY NAME: PSE+G - Hudson Generating Station

EPA ID NUMBER: NJD094961042 CASE NUMBER: NA

STREET ADDRESS: Duffield and Van Keuren Avenues

MUNICIPALITY: Jersey City COUNTY: Hudson

MAILING ADDRESS:

TELEPHONE # (201) 217-3672 FAX # (201) 792-9736

BLOCK : 1200 LOT : 3B, 25

FACILITY PERSONNEL: James Peach - Sr. Env. Engineer
(name & title) Vince Minetti - Spectrum Env. Enterprises - Consultant

INSPECTION DATE: 6/24/97

INSPECTOR'S NAME & TITLE: Joseph M. Mirabella, Supervising Environmental Specialist

OTHER STATE/EPA PERSONNEL: —

REPORT PREPARED BY: Joseph Mirabella
REVIEWED BY: [signature] DATE OF REVIEW: 7/25/97

BJB000018

920980291

INSPECTION DATE(S): 6/25/97
TIME IN: 0900
TIME OUT: 1700

PHOTOS TAKEN: YES(X) NO( ) QUANTITY( ) ATTACH PHOTO LOG

SAMPLES TAKEN: YES(X) NO( ) HOW MANY( ) ATTACH SAMPLE LOG

SITE BACKGROUND INFORMATION

EMPLOYEES: 180 SHIFTS/WEEK: 4

DATE OPERATIONS BEGUN: 1964 SIC CODE: 4931

ACRES: 240 # OF BUILDINGS/SQFT: 10 buildings

PRODUCTS PRODUCED: electric power

PREVIOUS OPERATIONS AT SITE: Unknown

NON-HAZARDOUS WASTE. TANKS ON SITE: Lube oil, #6, #2 fuel oil, NaOH caustic
(provide a list of tanks, location, and capacities)
2,000 gallon gas tank, Fuel oil tanks approx 5,000

AIR PERMITS: 19 NJPDES PERMITS: NJ0000677

UIC PERMIT: — POTABLE WATER ID. NUMBER: —

WELL DIVERSION PERMIT (>100,000 gal/day): —

WELLS ON SITE: —

PERMITS OTHER: (MUA) — ISRA CASE NUMBER:

BUST REGISTRATION #: 005301 1 2000 gal gas tank

COPY OF LAST YEARS RIGHT TO KNOW SURVEY ON SITE? yes

COPY OF LAST YEARS FORM "R" SURVEY ON SITE? yes

DOES THE FACILITY HAVE A POLLUTION PREVENTION PLAN? yes

WATER SUPPLY-PUBLIC: Jersey City WELL: —

SOLID WASTE-POTW: PVSC SEPTIC: —

FLOOR DRAINS: oil/water separator DISCHARGE TO: Hackensack River

920980292

INSPECTION AND GENERAL FACILITY OPERATIONS:

On June 24, 1997 this inspector (Joseph Mirabella) performed a Compliance Evaluation Inspection at Public Service Electric and Gas Company's (PSE&G) Hudson Generating Station, in Jersey City, EPA ID# NJD 094961042. In 1990 the facility was cited for needing an emergency coordinator phone number on their contingency plan and failure to perform daily inspections. The facility came into compliance with both violations.

This generating facility is one of the largest in the Northeast and generates electricity for Hudson County and surrounding communities. The facility burns either oil, coal or natural gas depending on cost and power needs (coal being the most cost effective). The fuel is burned in a 400 or 700 megawatt boiler units to generate steam to turn a turbine which is connected to the generators. Water for the boilers comes from ordinary public water supply which is treated to remove impurities which can damage the equipment. This is accomplished by using ion exchange columns and carbon filters. Once used, the steam is condensed to liquid and sent through the water treatment system which removes oils and metals which may have been picked up from the turbines. This water and non-contact cooling water are discharged into the Hackensack River (NJPDES #NJ0000647).

The facility maintains four (4) satellite accumulation areas which generate waste petroleum naptha from Safety-Kleen parts washers used to clean the various equipment needed to maintain the turbines and generators. The facility also generates large quantities of waste paints, lead contaminated paint scrapings, mercury switches, lab pack chemicals and heavy duty lead acid batteries which the facility chooses to handle as a hazardous waste. The amount of hazardous waste which this facility generates varies considerably depending on what projects or other work is being done at any particular time. Mr. Peach and his consultant made it clear that based on current and expected hazardous waste generation, PSE&G considers this facility a Large Quantity Generator and expects it to regulated as such. The facility gives an overall impression of being well organized and run. No violations were issued and the facility seems to be in full compliance. There was a 55 gallon plastic bag in the under 90 days storage area which contained various containers of waste paint. The bag was in marginal condition and I recommended that it be replaced with a fiber drum to avoid any potential discharge. Mr. Peach agreed and said it would be taken care of.

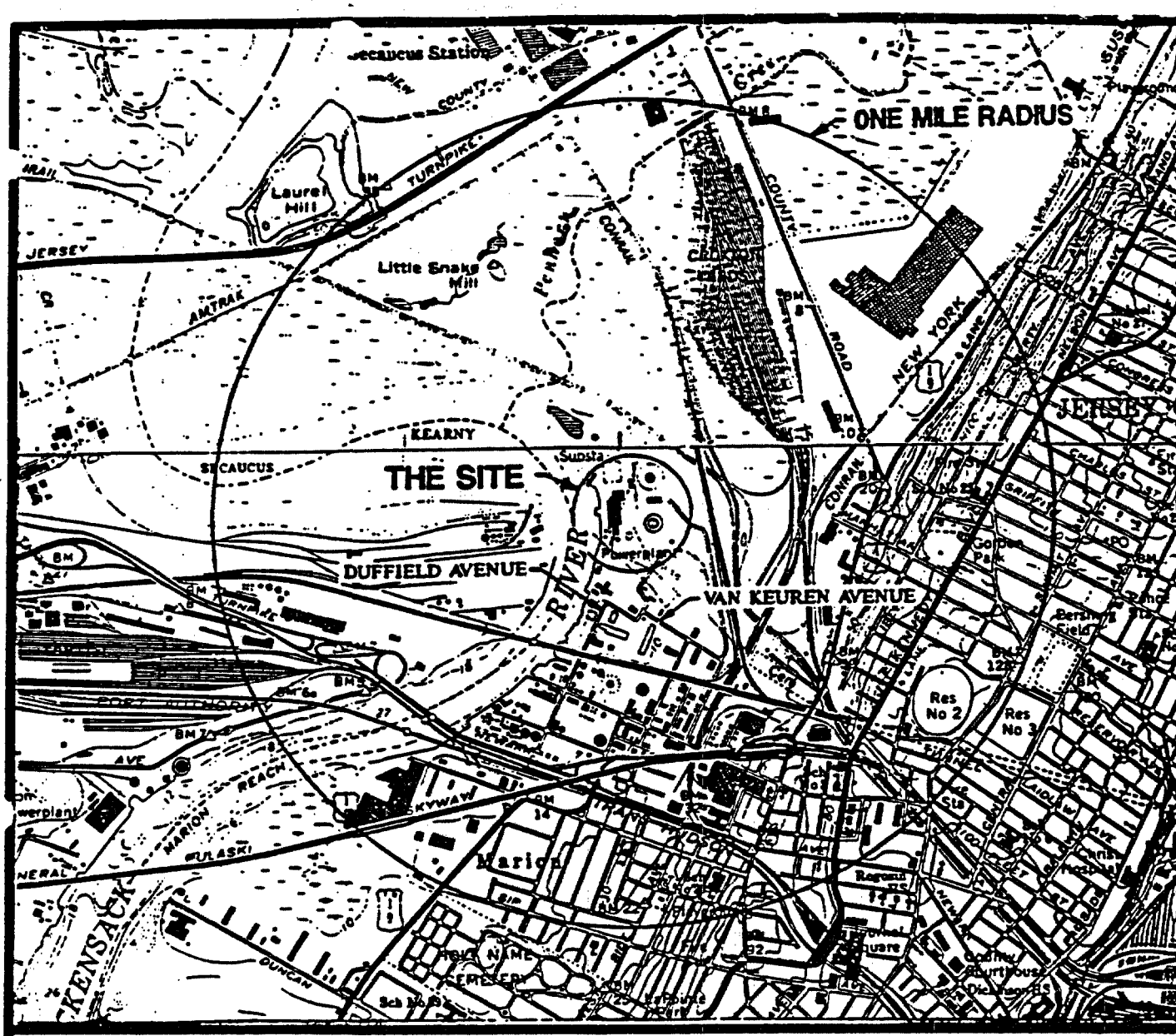

QUADRANGLE LOCATION

SCALE 1:24 000

1 0 1

1000 0 1000 2000 3000 4000 5000 6000 7000 FEET

1 .5 0 1 KILOMETER

CONTOUR INTERVAL 10 FEET
DATUM IS MEAN SEA LEVEL

COORDINATES	ISSUE	DESCRIPTION	DRWN.	CHKD.	APPR.
UTM: 4,511,000mN, 578,200mE LONGITUDE : 74° 04' 25" W LATITUDE : 40° 44' 50" N	A	PRELIMINARY	M.M.C.	J.R.S.	J.R.S.

BASE MAP: UNITED STATES GEOLOGICAL SURVEY (USGS) JERSEY CITY, N.J. – N.Y. QUADRANGLE

CleanHarbors
ENVIRONMENTAL ENGINEERING, INC.
325 Wood Road
Braintree, Massachusetts 02184
Telephone (617) 849-1200/1800

PUBLIC SERVICE ELECTRIC & GAS COMPA
HUDSON GENERATING STATION
DUFFIELD AND VAN KEUREN AVENUES
JERSEY CITY, NEW JERSEY 07306

LOCUS MAP

PROJECT NO. E-2599	DWG. NO. 2599-L-04	FIGURE
SCALE AS NOTED		

920980294

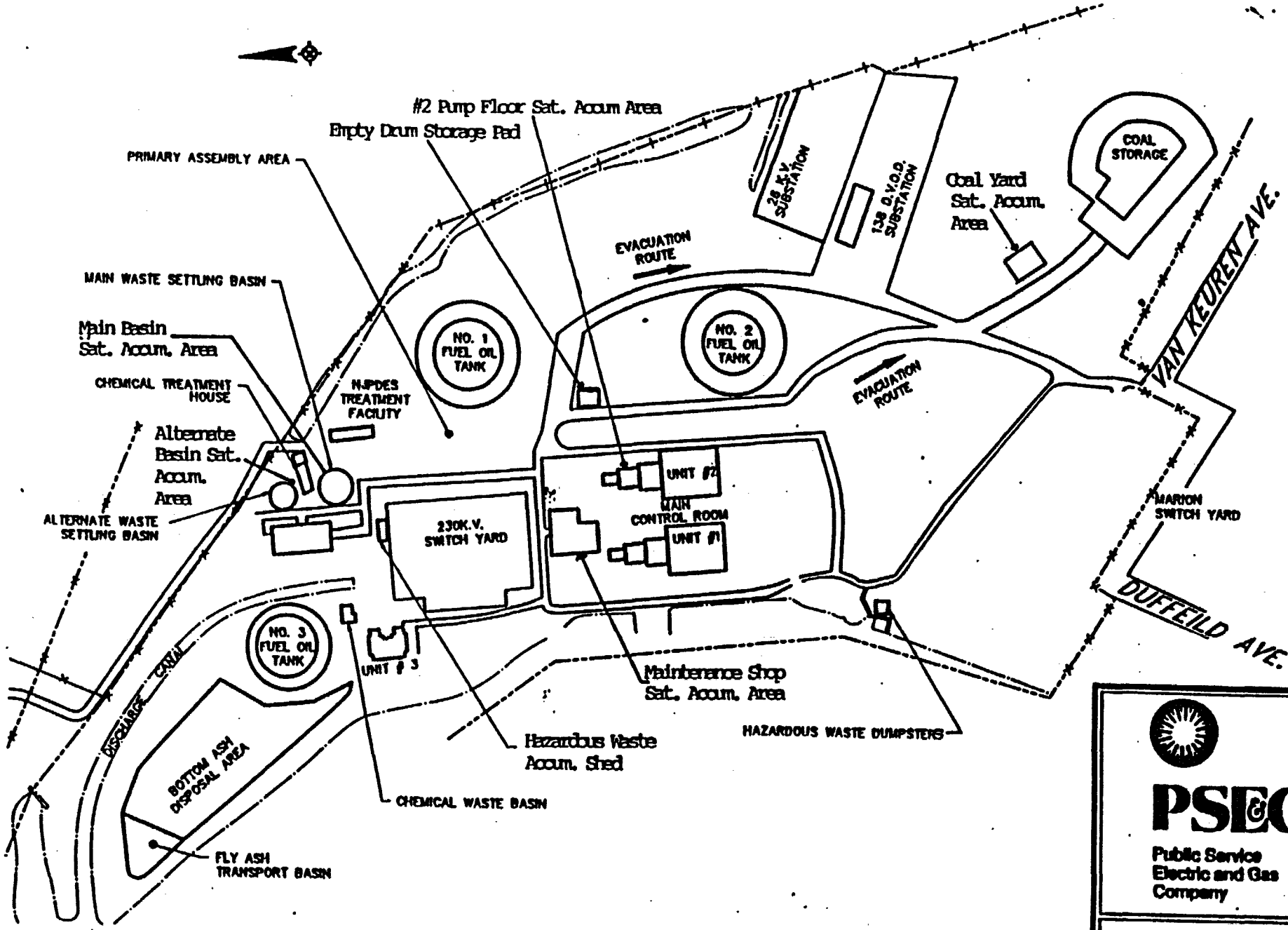

PSE&G
Public Service Electric and Gas Company

HUDSON GENERATING

920980295

HAZARDOUS WASTE INVENTORY

LOCATION	WASTE CODES	DESCRIPTION	QUANTITY PRESENT
<90 day Storage area	D001	Waste Paint	approx. 200 lbs
<90 day Storage	D002 D008	Industrial Lead Acid Batteries	approx. 1200 lbs
maintenance shop	D039	(4) Form Safety Kleen parts washers	approx. 60 gallons

REV. 1/10/97

920980296

MANIFESTS REVIEWED

Manifests reviewed from 6/94 through 6/97

Number of manifests in compliance: 47

Number of manifests NOT in compliance: 0

Total number of manifests reviewed: 47

According to the manifests, does the facility import or export any waste? YES ___ NO X

(if yes, complete the import/export section of this report)

List manifest document numbers of those manifests not in compliance and note each deficiency.

Attach copies of manifests which have deficiencies.

Manifest#	DATE	N.J.A.C.7:26G-	Comments

920980297

GENERATOR INDEX

CHECK THE SECTIONS AND ACTIVITIES OF THIS REPORT WHICH ARE APPLICABLE TO THE FACILITY AND COMPLETE THOSE SECTIONS FOR THIS INSPECTION.

SECTIONS NOT APPLICABLE ARE NOT INCLUDED IN THE REPORT.

GENERATOR WASTE MANAGEMENT PRACTICES

#	SECTION	PAGE
1.	MULTI MEDIA CHECKLIST	7. ____
2.	WASTE DETERMINATION	8. X
3.	GENERATOR STATUS	9. X
4.	SATELLITE ACCUMULATION AREAS	10. X
5.	L. Q. GENERATOR STORAGE AREAS	11. X
6.	S. Q. GENERATOR STORAGE AREAS	12. ____
7.	GENERATOR ABOVE GROUND TANKS STORAGE AREAS	13. ____
8.	UNDERGROUND TANKS	17. ____
9.	USED OIL	19. ____
10.	GENERATOR MANIFESTS	31. X
11.	HAZARDOUS WASTE EXPORTATION	35. ____
12.	IMPORTS OF HAZARDOUS WASTE	37. ____
13.	CONTINGENCY PLAN & EMERGENCY PROCEDURES	38. X
14.	PERSONNEL TRAINING	40. X
15.	PREPAREDNESS & PREVENTION	41. X
16.	DRIP PADS	42. ____
17.	WASTE WATER TREATMENT PLANT QUALIFICATION	43. ____

920980298

SECTION 3.

GENERATOR STATUS

	YES	NO
Does the generator generate >100 kg, but <1000 kg of hazardous waste in any calender month or accumulate >1000 kg, but <6,000 kg of hazardous waste on site?		
OR		
Does the generator generate >1000 kg of any hazardous waste or 1 kg of acutely hazardous waste in any calendar month or accumulate >6000 kg of hazardous waste on site?	X	
IF YES, TO EITHER OF THE ABOVE:		
N.J.A.C. 7:26G-6.1(a)-		
262.12(a) The Generator FAILED to obtain an EPA ID number.		X
IF THE GENERATOR IS A CESQG,		
Does the generator wish to deactivate his EPA ID number?		X

COMMENTS

920980299

SECTION 4

SATELLITE ACCUMULATION AREAS

	YES	NO
IS THE FACILITY IN COMPLIANCE WITH THE SATELLITE ACCUMULATION REGULATIONS?	X	___

IF NO, CHECK THE ITEMS OF NONCOMPLIANCE.

N.J.A.C. 7:26G-6.1(a)-		
262.34(c)(1)	Quantity of waste EXCEEDS 55 gal. or 1 qt. of acutely hazardous waste.	___
265.171	Container leaking, failed to transfer.	___
265.172	Container made of incompatible material.	___
265.173(a)	Container not kept securely closed.	___
262.34(c)(1)	Accumulation area is:	
	NOT at or near a point of generation.	___
	NOT under the control of the operator.	___
262.34(c)(1)(ii)	Containers NOT marked "Hazardous waste" or With other words which identify the waste.	___
262.34(c)(2)	Containers NOT marked with date when filled.	___
262.34(c)(1)	Containers NOT moved from satellite area within three days.	___

COMMENTS

920980300

SECTION 5
LARGE QUANTITY GENERATOR CONTAINER ACCUMULATION AREAS

	YES	NO
IS THE FACILITY IN COMPLIANCE WITH THE GENERATOR STORAGE REGULATIONS?	X	

IF NO, CHECK THE ITEMS OF NONCOMPLIANCE.

N.J.A.C. 7:26G-6.1(a)-		
262.32(b)	NO manifest number on containers ready for disposal.	____*
262.30	Containers FAILED to meet DOT regulations. (49 CFR 171,179) specs for packaging.	____
262.31	Containers FAILED to meet DOT regulations (49 CFR 172) for labeling.	____
262.34(a)	Waste ACCUMULATED OVER 90 DAYS	____
	Containers NOT marked:	
262.34(a)(2)	With accumulation start date	____
262.34(a)(2)	ID Labels NOT visible.	____
262.34(a)(3)	THE WORDS "Hazardous Waste".	____
	262.34(a)(1)(i) Requires LQGs to comply with 265 Subpart I	
265.171	Containers NOT in good condition/owner FAILED to transfer.	____
265.172	Containers NOT compatible with waste.	____
265.173(a)	Containers NOT kept closed.	____
265.173(b)	Containers NOT managed properly to prevent rupture/leak.	____
265.177	Incompatible hazardous wastes NOT segregated.	____
265.174	Accumulation area NOT inspected weekly.	____
265.176	Containers of ignitable and reactive wastes NOT located at least 50 feet from the facility's property line.	____
265.34(a)	Access to communication or alarm system is NOT maintained.	____
265.35	INADEQUATE aisle space.	____

COMMENTS

920980301

MANIFEST RECORD KEEPING & REPORTING

	YES	NO
IS THE FACILITY IN COMPLIANCE WITH THE GENERATOR RECORD-KEEPING & REPORTING REGULATIONS? (N.J.A.C. 7:26G-6.1(a)-262)	X	

IF NO, CHECK THE ITEMS OF NONCOMPLIANCE

N.J.A.C. 7:26G-6.1(a)-

262.40 RECORD KEEPING

262.40(a) Generator FAILED to retain copy of each manifest, in accordance with 262.23(a) for three (3) years, *or until he receives a signed copy from the designated facility which received the waste. This signed copy must be retained onsite for at least three (3) years from the date the waste was accepted by the initial transporter.* ___

262.40(b) Generator FAILED to keep a copy of each Biennial Report and Exception Report for a period of at least three years from the due date of the report. ___

Note: As per 262.40(d), the periods of retention referred to in this section are extended automatically during the course of any unresolved enforcement action regarding the regulated activity or as requested by the Administrator.

262.41 BIENNIAL REPORT.

262.41(a) Generator FAILED to prepare and submit a *single* copy to the Regional Administrator by March 1 of each *even* numbered year, when the facility shipped a hazardous waste offsite to a treatment, storage, or disposal facility within the United States. The Biennial Report must also cover Generator activities during the previous year. ___

262.41(a) Generator FAILED to include the following information on a Biennial Report:

262.41(a)1 Generator's USEPA I.D. number, name, and address ___

262.41(a)2 Calendar year covered by the Biennial Report ___

262.41(a)3 USEPA ID number, name and address for each off-site TSDF used by Generator during the year. ___

262.41(a)4 USEPA I.D. number and name of each transporter used during the reporting year for shipments to TSDF'S. ___

262.41(a)5 The description, EPA hazardous waste number (from 40 CFR part 261, (subpart C or D), DOT hazardous class, and quantity of each hazardous waste shipped offsite for shipments to TSDF's (Information must be listed by USEPA I.D. number of each offsite TSDF to which waste was shipped). ___

262.41(a)6 Description of the efforts undertaken during the year to reduce the volume and toxicity of waste generated. ___

262.41(a)7 Description of the changes in volume and toxicity of waste actually achieved during the year in comparison to the previous years. ___

262.41(a)8 The certification is signed by the Generator or authorized representative. ___

262.41(b) Generator, who treats, stores, or disposes of hazardous waste onsite, FAILED To submit a Biennial Report covering those wastes in accordance with the provisions of 40 CFR parts 270, 264, 265, and 266. ___

920980302

262.42 EXCEPTION REPORTING

262.42(a)1 Generator, of greater than 1000 kg of hazardous waste in a calender month who has not received a copy of the manifest with the handwritten signature of the owner or operator of the designated facility within 35 days of the date the waste was accepted by the initial transporter, FAILED to contact the transporter and/or the owner or operator of the designated facility to determine the status of the hazardous waste. ___

262.42(a)2 Generator, of greater than 1000 kg of hazardous waste in a calender month FAILED to submit an Exception report to the Department when the facility has not received a copy of the manifest with the handwritten signature of the owner or operator of the designated facility within 45 days of the date the waste was accepted by the initial transporter. ___

The Generators Exception Report failed to include:

262.42(a)(2)I *A legible copy of the manifest for which the generator does not have confirmation of delivery.* ___

262.42(a)(2)ii *A cover letter, signed by the generator or his authorized representative explaining the efforts taken to locate the hazardous waste and the results of those efforts.* ___

262.42(b) Generator, of greater than 100 kg but less than 1000 kg of hazardous waste in a calendar month, who does not receive a copy of the manifest with the handwritten signature of the owner or operator of the designated facility within 60 days of the date waste was accepted by the initial transporter FAILED to *submit a legible copy of the manifest , with same indication that th generator has not received confirmation of delivery to the Department.* ___

NOTE: The submission to DEP need only be a handwritten or typed note on the manifest itself, or on an attached sheet of paper, stating that the return copy was not received.

262.44 SPECIAL REQUIREMENTS FOR GENERATOR'S OF BETWEEN 100 AND 1000 KG/MONTH OF HAZARDOUS WASTE

NOTE: A Generator of greater than 100 kg but less than 1000 kg of hazardous waste in a calendar month is subject only to the following requirements under RECORD KEEPING & REPORTING:

(a) Section 262.40(a) Retaining manifest copies onsite for 3 years ___

262.40(c) Retaining of test results/analysis for 3 years ___

262.40(d) Retention time extension's ___

(b) Section 262.42(b) Exception reporting requirements ___

(c) Section 262.43 Additional reporting ___

COMMENTS

920980303

SECTION 13
CONTINGENCY PLAN AND EMERGENCY PROCEDURES

YES

IS THE FACILITY IN COMPLIANCE WITH THE CONTINGENCY PLAN & EMERGENCY PROCEDURES REGULATIONS? X

IF NO, CHECK THE ITEMS OF NONCOMPLIANCE.

262.34(a)(4) Requires LQGs to comply with 265 Subpart D

N.J.A.C. 7:26G-6.1(a)-

265.51(a) NO written contingency plan.

265.51(b) Generator FAILED to implement the plan in an emergency.

265.52(a) Plan FAILED to describe the response actions facility personnel and local authorities shall take.

265.52(b) Generator has a DPCC or SPCC Plan and FAILED to amend that plan to incorporate hazardous waste management.

265.52(c) Plan FAILS to describe arrangements agreed to by local authorities.

265.52(d) Plan FAILS to list names, addresses, and phone numbers (office and home) of emergency coordinators.

265.52(e) Plan FAILS to include a list, location, AND CAPABILITIES of all emergency equipment.

265.52(f) Plan FAILS to describe evacuation procedures, evacuation signal(s) AND routes.

Generator FAILED to:

265.53(a) 1. Keep a copy of the plan at the facility.

265.53(b) 2. Submit the contingency plan to local authorities.

265.54 Generator FAILED to revise the contingency plan when:

(a). Applicable regulations are revised.

(b). The plan fails.

(c). The facility changes.

(d). The Emergency Coordinator changes.

(e). The emergency equipment changes.

265.55 Emergency coordinator NOT available.

N.J.S.A. 58:10-23.11(c) There is a discharge of a hazardous substance.

N.J.S.A. 58:10-23.11(e) Facility FAILED to report the discharge.

COMMENTS

920980304

SECTION 13
CONTINGENCY PLAN AND EMERGENCY PROCEDURES

	YES	N
IS THE FACILITY IN COMPLIANCE WITH THE CONTINGENCY PLAN & EMERGENCY PROCEDURES REGULATIONS?	X	

IF NO, CHECK THE ITEMS OF NONCOMPLIANCE.

SMALL QUANTITY GENERATOR REQUIREMENTS

262.34(d)(5)(i) Failure to have Emergency Coordinator on-site or on call _

262.34(d)(5)(ii) Failure to post:
262.34(d)(5)(ii)(A) Emergency Coordinators phone # _
262.34(d)(5)(ii)(B) Location of fire extinguishers and spill control equipment _
262.34(d)(5)(ii)(C) Phone # of fire department _

262.34(d)(5)(iii) Failure to ensure employees are trained to handle haz-waste and emergencies _

262.34(d)(5)(iv) Failure to properly respond to and report an emergency _

COMMENTS

920980305

SECTION 14

PERSONNEL TRAINING

	YES
IS THE FACILITY IN COMPLIANCE WITH THE PERSONNEL TRAINING REGULATIONS?	X
THE TRAINING PROGRAM UTILIZES CLASSROOM TRAINING?	X
ON THE JOB TRAINING?	X
BOTH CLASSROOM &N THE JOB TRAINING?	X

IF NO, CHECK THE ITEMS OF NONCOMPLIANCE.

262.34(a)(4) Requires LQGs to comply with 265.16
N.J.A.C. 7:26G-9.1(a)-

265.16(a)(2) Training program NOT directed by a person trained in hazardous waste management procedures and,

265.16(a)(3) NOT designed to ensure that facility personnel are able to respond effectively to emergencies.

265.16(a)(3) Program FAILS to include the following emergency response procedures and equipment:

265.16(a)(3)(I) Procedures for using facility emergency and monitoring equipment.

265.16(a)(3)(ii) Key parameters for automatic waste feed cut-off systems.

265.16(a)(3)(iii) Procedures for utilizing communications or alarm systems.

265.16(a)(3)(iv) Response procedures for fires & explosions.

265.16(a)(3)(v) Ground water contamination response procedures.

265.16(a)(3)(vi) Shutdown procedures.

265.16(b) Personnel have NOT successfully completed training within six months of the date of their employment or assignment to a new position at the facility.

265.16(b) Personnel work unsupervised before training program is completed.

265.16(c) Personnel do NOT take part in an annual review of training.

265.16(d) NO written documentation of the following:

265.16(d)(1) Job title for each position and the name of the employee filling each job.

265.16(d)(2) A written job description.

265.16(d)(3) Description of the training given to personnel.

265.16(d)(4) Documentation of actual training.

265.16(e) Training records NOT kept.

COMMENTS

920980306

SECTION 15

PREPAREDNESS AND PREVENTION

IS THE FACILITY IN COMPLIANCE WITH THE PREPAREDNESS & PREVENTION REGULATIONS? YES X

IF NO, CHECK THE ITEMS OF NONCOMPLIANCE.

262.34(a)(4) Requires LQGs to comply with 265 Subpart C
262.34(d)(4) Requires SQGs to comply with 265 Subpart C

N.J.A.C. 7:26G-9.1(a)-

265.32 Facility FAILS to have:

265.32(a) Communications or alarm system.

265.32(b) A telephone or device to summon emergency assistance.

265.32(c) Portable emergency equipment.

265.32(d) Adequate Water supply.

265.33 Generator FAILED to test and maintain emergency equipment.

265.32(d) Adequate aisle space.

Generator FAILED to:

265.37(a)(1)Familiarize Police, fire departments, and emergency response teams with the layout of the facility, & hazardous waste handled.

265.37(a)(2)Have an agreement designating primary emergency authority to a specific police and fire department where more than one Police and fire department are involved.

265.37(a)(3)Make agreements with emergency response contractors, and equipment supplier.

265.37(a)(4)Make arrangements to familiarize local hospitals with the properties of hazardous waste handled at the facility and the types of injuries result from fires, explosions, or discharges at the facility.

265.37(b) Document when authorities identified in (f)1 through 5 above declined to enter into such arrangements.

COMMENTS

920980307

SECTION 10
GENERATOR MANIFESTS

	YES	NO
IS THE FACILITY IN COMPLIANCE WITH THE GENERATOR MANIFEST REGULATIONS? (N.J.A.C. 7:26G -6.1(a) 262) (SUBPART B)	X	

IF NO, CHECK THE ITEMS OF NONCOMPLIANCE

N.J.A.C. 7:26G-6.1(a)-

262.20(a) Generator FAILED to prepare a manifest before a generator transports, or offers for transportation, hazardous waste for offsite treatment, storage, or disposal, according to the instructions included on the back of the manifest form. ___

Note: Items A-K of the manifest shall be completed even if the instructions of an out-of-state manifest does not address the shaded portions.

262.20(a) Generator FAILED to include the following information on a manifest:

Generator's name, mailing address, site address, and phone number ___

Generator's EPA I.D. number ___

Transporter(s) name, phone number, or New Jersey registration number ___

Transporter(s) EPA I.D. number ___

Name, address and phone number of designated TSDF facility ___

TSDF's EPA I.D. number ___

Proper USDOT (49CFR Parts 171-177) description of waste ___

Special handling instructions, including DOT descriptions for NOS material & 2 major constituents, a 24 hour emergency number as per 49 CFR 172.201(d), or decal number. ___

Generator FAILED to complete Items A-K (shaded portions) of the manifest? ___

N.J.A.C.7:26G-6.3 Generator FAILED to utilize the proper waste code(s) that accurately describe the shipment of hazardous waste, determined according to the waste "Hierarchy" ___

262.20(b) Generator FAILED to designate on the manifest one facility that is permitted to handle waste described on the manifest ___

262.40(a) Generator FAILED to retain copy of each manifest, in accordance with 262.23(a)for three (3) years, or until he receives a signed copy from the designated facility which received the waste. This signed copy must be retained onsite for at least three (3) years from the date the waste was accepted by the initial transporter. ___

262.23(a)(1) Generator FAILED to sign the manifest certification by hand. ___

262.23(a)(2) Generator FAILED to obtain the handwritten signature of the initial transporter and date acceptance on the manifest. ___

262.23(a)(3) Generator FAILED to retain one copy of the manifest signed by the generator and the initial transporter, in accordance with 262.40. ___

262.23(b) Generator FAILED to give transporter the remaining copies of the manifest. ___

920980308

SECTION 10
GENERATOR MANIFESTS

IS THE FACILITY IN COMPLIANCE WITH THE GENERATOR MANIFEST REGULATIONS? (N.J.A.C. 7:26G -6.1(a) 262) (SUBPART B)

YES X NO ___

IF NO, CHECK THE ITEMS OF NONCOMPLIANCE

N.J.A.C. 7:26G-6.1(a)-

262.20(a) Generator FAILED to prepare a manifest before a generator transports, or offers for transportation, hazardous waste for offsite treatment, storage, or disposal, according to the instructions included on the back of the manifest form. ___

Note: Items A-K of the manifest shall be completed even if the instructions of an out-of-state manifest does not address the shaded portions.

262.20(a) Generator FAILED to include the following information on a manifest:

Generator's name, mailing address, site address, and phone number ___

Generator's EPA I.D. number ___

Transporter(s) name, phone number, or New Jersey registration number ___

Transporter(s) EPA I.D. number ___

Name, address and phone number of designated TSDF facility ___

TSDF's EPA I.D. number ___

Proper USDOT (49CFR Parts 171-177) description of waste ___

Special handling instructions, including DOT descriptions for NOS material & 2 major constituents, a 24 hour emergency number as per 49 CFR 172.201(d), or decal number. ___

Generator FAILED to complete Items A-K (shaded portions) of the manifest? ___

N.J.A.C.7:26G-6.3 Generator FAILED to utilize the proper waste code(s) that accurately describe the shipment of hazardous waste, determined according to the waste "Hierarchy" ___

262.20(b) Generator FAILED to designate on the manifest one facility that is permitted to handle waste described on the manifest ___

262.40(a) Generator FAILED to retain copy of each manifest, in accordance with 262.23(a)for three (3) years, or until he receives a signed copy from the designated facility which received the waste. This signed copy must be retained onsite for at least three (3) years from the date the waste was accepted by the initial transporter. ___

262.23(a)(1) Generator FAILED to sign the manifest certification by hand. ___

262.23(a)(2) Generator FAILED to obtain the handwritten signature of the initial transporter and date acceptance on the manifest. ___

262.23(a)(3) Generator FAILED to retain one copy of the manifest signed by the generator and the initial transporter, in accordance with 262.40. ___

262.23(b) Generator FAILED to give transporter the remaining copies of the manifest. ___

920980309

262.23(c) Generator FAILED to send three (3) copies of the manifest dated and signed in accordance with this section to the owner or operator of the designated facility or the last water (bulk shipment) transporter to handle the waste in the United States if exported by water. Applicable for shipments of hazardous waste within the United States solely by water (bulk shipments only). (Copies of the manifest are NOT required for each transporter). ___

262.23(d) Generator FAILED to send at least three copies of the manifest dated and signed in accordance with this section, in regards to rail shipments of hazardous waste within the United States which originate at the site of generation, to:

262.23(d)1 The next non-rail transporter (if any); or, ___

262.23(d)2 The designated facility if transported solely by rail; or ___

262.23(d)3 The last rail transporter to handle the waste in the United States if the waste is exported. ___

262.23(e) Generator FAILED to assure that the designated facility agrees to sign and return the manifest to the generator, and that any out-of-state transporter signs and forwards the manifest to the designated facility, in regards to shipments of hazardous waste to a designated facility in an authorized State which has not yet obtained authorization to regulate that particular waste as hazardous. ___

REQUIREMENTS FOR SQG's WHO HAVE TOLLING AGREEMENTS FOR RECLAMATION

262.20(e) The requirements of this subpart (Subpart B-The Manifest) do not apply to hazardous waste produced by Generator's of greater than 100 kg, but less than 1,000 kg in a calendar month, if waste is reclaimed offsite. However, it shall still be considered a violation if Generator fails to meet any of the following requirements:

262.20(e)(1) Generator FAILED to have a contractual agreement(s) while having the hazardous waste reclaimed offsite (indicate in narrative section who Generator has contractual agreement with). ___

262.20(e)(1)(I) Generator FAILED to indicate the type of waste, and the frequency of shipments in their contractual agreement(s). ___

262.20(e)(1)(ii) Generator FAILED to utilize a vehicle owned, and operated by the reclaimer of the hazardous waste, used to transport the waste to the recycling facility and to deliver regenerated material back to the generator. ___

262.20(e)2 Generator FAILED to maintain a copy of their reclamation agreement onsite for a period of three (3) years after the termination or expiration of the agreement. ___

COMMENTS

920980310

Form DEP-061 A
4/89

PAGE 1 OF ___

09-06-182

NEW JERSEY DEPARTMENT OF ENVIRONMENTAL PROTECTION
DUTY OFFICER NOTIFICATION REPORT

CASE NO. 90 (Yr) - 03 (Mo) - 01 (Day) - 1529 (Time)

DATE 03 (Mo) - 01 (Day) - 90 (Yr) REC'D BY RIS TIME 1541

INCIDENT REPORT BY:
Name Frank Cziglar Phone 330-6420
Street Duffield & Van Buren Avenues
City Jersey City State NJ
Affiliation/Title PSE&G - Envir. Coordinator

INCIDENT LOCATION: ___ Transportation X Facility ___ Other:
Name (Site): PSE&G Hudson Generating Station Phone
Street
City Jersey City County Hudson State NJ Zip Code
Date of Incident: 03 (Mo) - 01 (Day) - 90 (Yr) Time: 1505

IDENTITY OF SUBSTANCE(S) SPILLED, RELEASED, ETC.: ___ Suspected ___ Unknown
Name of Substance(s) [Gas, (Liquid), Solid]: Sulfuric Acid - 93%
Amount Released/Spilled 20 Gals. ___ Actual ___ Potential X Estimated Substance Contained Y (N) U
Type of Release/Spill: X Terminated ___ Continuous ___ Intermittent Hazardous Material (Y) N U

INCIDENT DESCRIPTION:
___ Fire ___ Explosion ___ Air Rel X Spill ___ MVA ___ Derailment ___ Smoke/Dust
___ Odors ___ Sewage ___ NJPDES ___ Noise ___ Wildlife ___ Illegal Dumping ___ Drums
___ Equip Start-Up/Shutdown, Equip Fail/Upset, etc.
___ Other (specify)

Injuries	Y (N) U	Public Exposure	Y (N) U
Facility Evacuation	Y (N) U	Fire Department at Scene	Y (N) U
Population Evacuation	Y (N) U	Police at Scene	Y (N) U
Potable Water Source	Y (N) U	Assistance Requested	Y (N) U
Contamination of ___ Air X Land X Water		Precipitation	Y (N) U
Receiving Water Hackensack River		Wind Direction/Speed	

Location Type: ___ Residential X Industrial ___ Commercial ___ Rural ___ Sensitive Population (Hosp., School, Nurs. Home)
STATUS AT INCIDENT SCENE Spill neutralized with H_2O. At least 2 gallons of neutralized product reached river. Spill occurred during a loading operation.

RESPONSIBLE PARTY: ___ Suspected ___ Unknown
Company Name PSE&G Hudson Generating Station Phone 330-6420
Contact Frank Cziglar Title Envir. Coordinator
Street Duffield & Van Buren Avenues
City Jersey City County Hudson State NJ Zip Code

OFFICIALS NOTIFIED (Name/Title):

NJSP:	/	Phone	Date/Time /	(T/M)
Local Health: Hudson Regional Health	/ (Secretary)	Phone 435-7001	Date/Time 3/1/90 / 1558	(T/M)
Local Munic:	/	Phone	Date/Time /	(T/M)
USEPA:	/	Phone	Date/Time /	(T/M)

INCIDENT REFERRED TO:
___ DEO X DWR ___ DSWM ___ DHSM X DHWM ___ DOH X DFG ___ DPF ___ DCJ ___ DCR
Region: ___ Northern X Metro ___ Central ___ Southern ___ ER1 ___ ER2

1. Name/Affil	/	Phone	Date/Time /	(T/M)
2. Name/Affil	/	Phone	Date/Time /	(T/M)
3. Name/Affil	/	Phone	Date/Time /	(T/M)

DEP RESPONSE Emergency Immediate Priority (No Response) V&A BERT

COMMENTS Tanker truck delivering acid spill due to transfer problems. Water was added to spill to neutralize it & sand was used to dike spill. Once dike was established approx. 2 gallons of neutralized product reached Hackensack River. Spill occurred on asphalt. Contaminated sand was placed into drums. Specific dispo to be given after offsite analysis.

Send 1 Specific-dispo COPIES: White - Lead Agency Yellow - DEO & DSS Pink - Other To Be Notified

BJB000019

17.

920980312

Please make red file (if none already) and index card for:

PSE+G Hudson Generating Station (Jersey City)

Thanks DO

09-06-182

920980313

DEP-090 11/8 LBE NFA
3/91

New Jersey Department of Environmental Protection

09-06-182

COMMUNICATIONS CENTER NOTIFICATION REPORT

RECEIVED
NOV 07 1991

Received 11/02/91 J TD Log# 17375

Operator BIMH Reviewed By JA Case# 91-11-2-1513-29

Notification Type Facility

Reported By	Affiliation	Phone
MR.SCRIVANICH	PSE+G	201-217-3674
Street Address	**Municipality**	**State**
DUFFIELD +VANKUREN	JERSEY CITY	NJ

Incident Location: Facility

Site: PSE+G			Phone 201-217-3674
Street Address	**Municipality**	**County**	**State**
DUFFIELD +VANKUREN	JERSEY CITY	HUDSON	NJ

Location Type Industrial Incident Date 11/02/91 Time 1500

Substance Released OIL FUEL #6
Amount Released (Estimate): 50 GAL
ID Known State Liquid CAS# Release Is Terminated
Additional Substances
Substance Contained? Y Hazardous Material? Y TCPA? N A310 Letter? Y
COMU Code 0906 Referral Code 014

Incident Description Spill

Injuries? N Public Evac? N Facility Evac? N Public Exposure? N
Police On Scene? N Firemen On Scene? N DEP Requested? N Wind Sp/Dir

Contamination Of Land Receiving Water

Status at Scene
PIPE LEAK CAUSE OF SPILL . COMPANY DOING CLEANUP .

Responsible Party Known

Party PSE+G		Phone 201-217-3674
Contact MR.SCRIVANICH		Title ENV.COOR.
Street Address	**Municipality**	**County** **State**
DUFFIELD +VANKUREN	JERSEY CITY	HUDSON NJ

OFFICIALS NOTIFIED

	Name	Affiliation	Phone	Date	Time
NJSP	DEM		609-882-2000	11/02/91	
MUNIC	JERSEY CITY	OPER 384	201-547-5477	11/02/91	1517
OTHER					

	Name	Affiliation	Method	Date	Time	T/M
1	[redacted]	DRPSR Metro	Faxed	11/02/91		B
2	[redacted]					
3	[redacted]					

COMMENTS

[redacted]

BJB000021

15.

920980315

09-06-182

New Jersey Department of Environmental Protection and Energy
Division of Responsible Party Site Remediation
Bureau of Emergency Response
Region I

INVESTIGATION

Case #: 91-12-10-0511 File #: 0906
PAC #: SYE

Date: 12/10/91

Investigator: Wade W. Wiarda Time Arrived: 0530

Time Departed: 1000

Location: PSE & G
Address: Jersey City, Hudson Co.

Responsible Party: PSE & G Hudson Generating Station
Mailing Address: Duffield and Van Kuren Avenue
Jersey City, Hudson County

Location Phone #: 201-217-3623

Health Dept. Rep: Phone # :

Origin of Complaint: Phone # :

Nature of Complaint: Lube oil spill due to overfill of storage tank.

Findings: BER I responded to the report of 2,000 gallon lube oil spill at the above location.

Upon arrival on scene this investigator met with the following officials:

Guido Serivanich	-	Lead Engineer, PSE & G
Herb Marsh	-	PSE & G
Vince Minett	-	PSE & G
Mike Cromis	-	PSE & G
P / O Chubb	-	USCG, NY
P / O Cleary	-	USCG, NY

The lube oil spill was approximately a 500 gallon total spill. The facility was performing an in house transfer from a lube oil tank to a storage tank inside the facility. The tank was overfilled resulting in the oil to travel out the vent pipe which was located on the outside of the building. The oil subsequently traveled across a parking lot area resulting in approximately 200 gallons to enter the Hackensack River.

Some material did escape producing an unrecoverable sheen. The remainder of the product was boomed off and contained around a barge moored at the facilities bulkhead.

BJB000022

920980317

Clean Harbors Inc. and Kens Marine Service arrived on scene to skim oil contained at dock. The oil on the parking lot area will also be skimmed and speedy dry will be deployed.

Conclusions: BER I responded to the report of a 2,000 gallon lube oil spill at the PSE & G, Hudson Generating Station, Jersey City N.J. Upon arrival on scene it was determined that approximately 500 gallons were released. Approximately 200 gallons entered the Hackensack River where most of the material was soon contained. Clean Harbors Inc. and Kens Marine Service arrived on scene to perform clean up. Recommendations were made to PSE & G to relocate or contain vent pipe to prevent any further discharge into the Hackensack River. MPO James Stewart, NJSP Marine Bureau issued violation of 23:5-28 for allowing the oil to enter the waters of the State of New Jersey.

Recommendations: No further action required by the Bureau of Emergency Response. This incident is being referred to the following agencies for follow up investigation.

1 - Division of Fish, Game & Wildlife
2 - Bureau of Field Operations - Metro

PSE & G contact Mr. Guido Scrivanich, Lead Engineer 201-217-3623.

Investigator — Date 12/13/91

Supervisor — Date 12/16/91

920980318

New Jersey Department of Environmental Protection
COMMUNICATIONS CENTER NOTIFICATION REPORT

Received:12/10/91 TD Log # 19603
Operator:DAVE Case # 91-12-10-0511-09

Notification Type: Facility

Reported By	Affiliation	Phone
MR. HULANDEL	PSE&G	201-217-3623
Street Address	**Municipality**	**State**
DUFFIELD&VANKUREN	JERSEY CITY	NJ

Incident Location: Facility
Site PSE&G Phone 201-217-3623

Street Address	Municipality	County	State
DUFFIELD&VANKUREN	JERSEY CITY	HUDSON	NJ

Location Type Industrial Incident Date 12/10/91 Time 0500

Substance Released OIL LUBE
Amount Released (Estimate)2000 GAL
ID:Known State Liquid CAS# Release Is Terminated
Additional Substances
Substance Contained? N Hazardous Material? Y TCPA? N A310 Letter? Y
COMU CODE: 0906 REF CODE: 001

Incident Description Spill

Injuries? N Public Evac? N Facility Evac? N Public Exposure? Y
Police On Scene? N Firemen On Scene? N DEP Requested? N Wind Sp/Dir

Contamination Of Land,Water Receiving Water HACKENSACK RIVER
Status At Scene SPILL DUE TO OVERFILL OF STORAGE TANK. HAS REACHED THE BANKS OF THE RIVER, PSE&G IN PROCESS OF CLEANUP.

Responsible Party Known
Party PSE&G Phone 201-217-3623
Contact MR. HULANDEL Title CONTROL OP

Street Address	Municipality	County	State
DUFFIELD&VANKUREN	JERSEY CITY	HUDSON	NJ

==========

OFFICIALS NOTIFIED

	NAME	TITLE	PHONE	DATE	TIME
NJSP :	OEM	TPR. WIDMIER	609-882-2000	12/10	0517
MUNIC:	JERSEY CITY	DISP 279	201-547-5477	12/10	0519
OTHER:					

	Name	Affiliation		Method	Date	Time	T/M
1.	B. DOYLE	DRPSR	ER1	Home	12/10	0514	T
2.		OEP	Monitoring		12/10		T
3.							

==========

COMMENTS

(609) 984-6500 Wally Stafford DCJ - notified

920980319

920980320

PUBLIC SERVICE E
HUDSON GENER
JERSEY CITY, NEW JERSEY

WATER TREATMENT WASTE DISPOSAL
HUDSON GENERATING STATION DECEMBER 19, 1963
P.S.E.&G. CO.

The state of New Jersey classifies the Hackensack River as a Class "A" stream which means that it is suitable for fishing and recreation. Regulations controlling the limit of waste permitted to enter the stream are not clearly defined and each proposed scheme is carefully studied by the state and passed on its own merit.

TYPE OF WASTE

The wastes from the demineralizing plant consist of dilute solutions of sulfuric acid and caustic soda used to regenerate the ion exchange resins in the mixed bed condensate polishing units.

QUANTITY OF WASTE

At normal operating conditions, the combination of acid and alkaline waste from the condensate purification plant produces a net acid excess of 161 pounds per day. The details of the waste flows from the demineralizing plant are shown in Table I entitled "Regeneration Waste Data, Hudson Generating Station", dated December 19, 1963.

METHOD OF DISPOSAL

The waste from the regeneration plant is collected in a basin where the acid and alkaline wastes are air mixed. From this basin, the waste is fed to the flowing water in the circulating water discharge canal at a controlled rate. This circulating water is taken from the Hackensack River and pumped through the condenser and into the canal through which it is discharged back into the river. Normally, two circulating water pumps will be in service and the flow through the canal is 280,000 gpm. With the waste flows as shown in Table I, this controlled rate is 5 gpm and results in an alkalinity decrease of .0480 ppm in the canal under normal operating conditions. During abnormal conditions when the mixed bed units are being continually regenerated, the resultant caustic decrease is .183 ppm. This will obviously have a negligible effect on the main body of water in the river.

BJB000024

920980321

WATER TREATMENT WASTE DISPOSAL
HUDSON GENERATING STATION
(Continued)

DESCRIPTION OF FACILITIES

The waste disposal basin has a capacity of 75,000 gallons. This design is predicated on a condition where one mixed bed regeneration is followed consecutively by another.

The basin is divided into three sections as follows:

Mixing or Surge Section	25,500	gal
Retention Section	25,500	gal
Effluent Section	24,000	gal

The effluent section prevents short circuiting between the inlet and outlet. The maximum surge possible for this unit is 6,500 gallons.

The basin is constructed of concrete with a caustic and acid proof brick lining. Piping to and from the waste basin is rubber lined and, where necessary, rubber or mastic coated.

The control valve provided in the waste basin outlet can be adjusted to maintain any desired outlet flow rate.

To give adequate mixing of the waste solutions, air is introduced through a grid in the mixing section. This grid is designed to provide a maximum of 500 scfm of air into a full basin to aerate as well as mix the waste prior to disposal. A pressure regulating valve will reduce the 300 psi or 125 psi compressor air discharge to 50 psi for the air grid supply pressure. A locally installed plug valve and orifice will be used for the final setting of air required to produce a gentle rolling motion of the basin solution. It should be pointed out that excessive aeration causes a priming of the basin which presents a potential hazard to personnel and results in an unsightly appearance of the basin. The reducing valve will also be provided with cut outs on both compressor pressure controllers to trip the basin air supply if the station air pressure decreases due to abnormally high demand.

A diffuser is provided at the point where the chemical waste is added to the flowing stream of water in the discharge canal in order to thoroughly disperse the chemicals.

A pH indicator-recorder is provided to monitor the water in the discharge canal below the point of chemical waste addition.

920980322

WATER TREATMENT WASTE DISPOSAL
HUDSON GENERATING STATION
(Continued)

BOILER ACID CLEANING WASTE

Provision is also made for carrying the spent acid solutions used in boiler chemical cleaning to the waste disposal basin. The size of the waste basin is sufficient to accommodate a boiler drain during a chemical cleaning operation and the wastes from one mixed bed regeneration at any one time. It is not likely operationally that these two acts should occur simultaneously. Boiler chemical cleaning will also be infrequent and should not occur more than once every one or two years after the station is in operation. These solutions should be completely neutralized by adding caustic soda directly to the waste basin prior to discharge into the canal. The air mixing grid must be in service during this neutralizing operation.

HOT:WTP
12-19-63

920980323

WASTE FLOW
CONDENSATE PURIFICATION SYSTEM
HUDSON GENERATING STATION

Normal Operation - One Regeneration per Day

	Water gal	Chemical pounds	
Cation and Anion Tank Drain	2600		
Acid Regeneration 1st stage	462.5	349	H_2SO_4
Acid Regeneration 2nd stage	462.5	349	H_2SO_4
Cation Rinse	1554		
Caustic Regeneration	1575	409	NaOH
Anion Rinse	1400		
Anion Resin Transfer to Storage	350		

Total Water/Regeneration 8405 gallons

Total Acid 698 lb

Caustic Neutralized by Acid = $698 \frac{80}{98}$ = 570 lb

Total Caustic 409 lb

Net Excess Acid 161 lb

Flow thru discharge canal 280,000 gpm

$$\frac{161}{280{,}000 \times 60 \times 24 \times 8.33} = .048 \text{ ppm } H_2SO_4$$

HOP:MVP
12-19-63

920980324

920980325

SP-1
Oct. 59

RECEIVED IN THE DIVISION OF ENVIRONMENTAL HEALTH

JAN 6 1964

New Jersey State Department of Health

Referred to _____

ROSCOE P. KANDLE, M.D.
State Commissioner of Health.

APPLICATION FOR THE APPROVAL OF PLANS AND SPECIFICATIONS FOR THE CONSTRUCTION OF SEWERAGE AND/OR INDUSTRIAL WASTES TREATMENT WORKS AND FOR THE OPERATION OF SAID WORKS

December 30, 19 63

To the State Commissioner of Health,
Trenton 25, New Jersey.

Dear Sir:

In accordance with the applicable provisions of Title 58 of the Revised Statutes of New Jersey, application is hereby made by

R. A. Baker
(Common Council, Commissioners, Board, Township Committee or Name of Individual, Etc.)

of the Public Service Electric and Gas Company
(City, Borough, Town, Township or Name of Corporation, Etc.)

of Newark, New Jersey (Name of Municipality) in the County of Essex (Name of County)

of the State of New Jersey, for the approval of plans and specifications prepared by

R. A. Baker 7775
(Name of Engineer and License Number)

for the construction of:

1. Chemical Waste Disposal System
(Comprehensive Sewer System, Partial Sewer System, Sewer Extensions)

covering _____ of the streets of the above municipality, the effluent therefrom
(Part or All)

to discharge into _____; and/or
(Name of Treatment Works)

2. _____
(New, or Additions and Alterations to the Existing Sewage Treatment Works and/or Industrial Waste Treatment Works)

consisting of A collecting basin, aerating and mixing facilities, and
(List Units Comprising Method)

flow control equipment

to treat Industrial Waste
(Domestic Sewage and/or Industrial Wastes)

from a water treatment plant
(Proposed or Existing Sewers or Establishment)

in the City (City, Borough, Town, Township) of Jersey City (Name of Municipality)

BJB000026

920980326

the effluent from the said works to be discharged into Hackensack River
(Name of Stream)
at the point and in the manner indicated on the plans.

The estimated cost for the work is $ 80,000.00

Accompanying this application are plans, specifications and a report by the designing engineer, as required by the Rules and Regulations adopted by the Department of Health of the State of New Jersey on August 11, 1925, and the amendments thereof and supplements thereto.

The applicant(s) agree that the works will be properly constructed in accordance with the plans and specifications as approved, and the conditions under which the approval is granted by the State Department of Health of the State of New Jersey.

Additional remarks The design of this basin is similar to those installed at Linden, Bergen, Mercer, and Sewaren Generating Stations of the Public Service Electric and Gas Company.

Authorization to sign application is contained in .....

Signed R. A. Baker

R. A. Baker

Chief Engineer

Electric Engineering Department

DEPARTMENT OF HEALTH OF THE STATE OF NEW JERSEY

DIVISION OF ENVIRONMENTAL HEALTH

Municipality City of Jersey City, N.J. for Hudson

Location Public Service Electric & Gas Company

Industrial Waste Treatment Plant

JAN 6 1964

Date 12/30/63 Copies 1 Sheets 1

Delivered - Mail, ~~Messenger~~, by whom Public Service Electric & Gas Co.

Application dated 12/30/63

Approval date 2-20-64

(This application for approval must be signed by the proper legalized officials having jurisdiction over sewage treatment works and/or industrial wastes treatment works, or by individual(s) for whom works are to be constructed.)

920980327

920980328

NE[illegible]
S[illegible]
EXAMINING ENGINEER'S REPORT

January 16, 1964
S-1-64-2073

Municipality ..... City of Jersey City

County .....

Organization ..... [illegible] Gas Company

Owners & Operators ..... Public Service Electric & Gas Company

Location of Project ..... Hudson Generating Station, Jersey City, N. J.

Engineer ..... R. A. Baker, P.E. #7775

Subject ..... Proposed construction of industrial waste treatment plant comprising collecting basin, aerating and mixing facilities and flow control equipment

Application ..... Dated December 30, 1963 and signed by R. A. Baker, Chief Engineer of Public Service Electric & Gas C[illegible]

Authority ..... Inherent

Estimated Cost $80,000

Sources of Information

1. Application dated December 30, [illegible] January 6, 1964.
2. Engineer's report dated December 19, 1963 - 2 copies.
3. Specifications No. 63-7085 dated August 1, 1963 - 2 copies.
4. Plans of Chemical Waste Disposal Basin, variously dated, 5 sheets - 2 sets.

Design Flow - 75,000 g.p.d.

Plant Classification - S-Ind.

Disposal of Industrial Waste - To proposed treatment plant.

Receiving Waters of Treated Waste - Hackensack River.

Basis of Design

It is proposed to construct a chemical waste disposal basin at a large electric generating station to neutralize the waste water from regenerating the ion exchange resins. Under normal operating conditions the combination of acid and alkaline waste produces a flow of 8,400 g.p.d. or 6 g.p.m. with a net acid excess of 161 pounds per day.

BJB000027

920980329

[redacted] acid proof brick [redacted] will be divided into three [redacted]

1. [redacted]
2. Retention section [redacted]
3. [redacted]

In order to [redacted] is introduced through a grid in the mixing section.

The acid and alkaline wastes are received in the mixing section and the contents are agitated by air for several hours. The nearly neutralised waste is gradually displaced to the retention section and then to the effluent section. A control valve in the outlet pipe will be adjusted to discharge an average flow of 6 g.p.m. to a diffuser located in the main discharge canal carrying spent cooling water. Flow in the canal is of the order of 280,000 g.p.m. at about [redacted] M.G.D. It is estimated that the maximum effect of the acid waste would be to reduce the alkalinity of the spent cooling water by about 0.2 part per million.

In addition to the daily waste from the regenerating operation, there will be chemical cleaning waste from the boilers about once per year. This waste will be discharged into the mixing section of the basin and caustic soda will be applied from a tank truck to neutralise the waste.

[redacted] EQUIPMENT

1. Receiving Tank

This is a horizontal cylindrical receiving tank of 850 g. capacity into which the various wastes drain. A chemical waste pump with capacity of 50 g.p.m. against 46' TDH pumps the blended waste through a 4" pipe to the mixing section of the outdoor basin. The receiving tank and pump are located inside the building.

2. Chemical Waste Basin

This is a rectangular open concrete basin lined with caustic and acid [redacted]. The basin has capacity of 75,000 gallons and is subdivided into three approximately equal sections:

1. Mixing section - 25,500 g.
2. Retention section - 25,500 g.
3. Effluent section - 24,000 g.

The mixing section is stirred by air discharging through perforated [redacted]. The blended waste is retained in the second section and then overflows [redacted] the effluent section.

The effluent discharges through a 10" pipe into a diffuser [redacted] of the spent cooling water. A control valve can be adjusted [redacted] flow rate.

3. Miscellaneous Equipment

The air grid is designed to supply 500 c.f.m. to the mixing [redacted]. regulating valve will reduce the plant air pressure to 50 psi [redacted].

920980330

It is proposed to construct [illegible] caustic and acid proof brick lining. The basin will have [illegible] and will be divided into three sections of approximately equal [illegible]

1. Mixing or surge section - 25,500 g.
2. Retention section - 25,500 g.
3. Effluent section - 24,000 g.

In order to provide adequate mixing of the waste water, air is introduced through a grid in the mixing section.

The acid and alkaline wastes are received in the mixing section and the contents are agitated by air for several hours. The nearly neutralized waste is gradually displaced to the retention section and then to the effluent section. A control valve in the outlet pipe will be adjusted to discharge an average flow of 6 g.p.m. to a diffuser located in the main discharge canal carrying spent cooling water. Flow in the canal is of the order of 280,000 g.p.m. or about 403 M.G.D. It is estimated that the maximum effect of the acid waste would be to reduce the alkalinity of the spent cooling water by about 0.2 part per million.

In addition to the daily waste from the [illegible] operation, there will be chemical cleaning waste from the boilers about once per year. This waste will be discharged into the mixing section of the basin and caustic soda will be applied from a tank truck to neutralize the waste.

PROPOSED FACILITIES

1. Receiving Tank

This is a horizontal cylindrical receiving tank of 850 g. capacity into which the various wastes drain. A chemical waste pump with capacity of 50 g.p.m. against 46' TDH pumps the blended waste through a 4" pipe to the mixing section of the outdoor basin. The receiving tank and pump are located inside the building.

2. Chemical Waste Basin

This is a rectangular open concrete basin lined with caustic and acid proof brick. The basin has capacity of 75,000 gallons and is subdivided into three approximately equal sections:

1. Mixing section - 25,500 g.
2. Retention section - 25,500 g.
3. Effluent section - 24,000 g.

The mixing section is stirred by air discharging through perforated plastic pipe. The blended waste is retained in the second section and then overflows a weir into the effluent section.

The effluent discharges through a 10" pipe into a diffuser in the discharge canal of the spent cooling water. A control valve can be adjusted to maintain the desired flow rate.

3. Miscellaneous Equipment

The air grid is designed to supply 500 c.f.m. to the mixing section. A pressure regulating valve will reduce the plant air pressure to 50 psi. A plug valve and

920980331

orifice [illegible] sufficient to impart a gentle rollin[illegible] motion of [illegible]

A diffuser is provided at the point [illegible] effluent is discharged into the flowing [illegible]

A pH indicator [illegible] to monitor the quality of the [illegible] the treatment plant. This [illegible] the years.

Discussion

The proposed treatment plant will [illegible] effluent more acid than that in our usual standards of quality. However, the dilution is enormous. It is of the order of 1 volu[illegible] in 48,000 volumes. Under these [illegible] circumstances, it is recommended that the requirement that the pH of an effluent be within the range pH 5.0 to 8.0 be waived.

There are several similar waste treatment plants now operating in the State with satisfactory results.

Recommendations

The plans, specifications and allied data relative to this project have been examined [illegible] substantial compliance with the policy of the Department under the existing circumstan[illegible] has been noted.

It is recommended that a permit be issued for construction and operation, subject to conditions common to all projects.

Respectfully submitted,

mmg

Mortimer M. Gibbons
Principal Public Health Engineer

6E13:06

920980332

PROPOSED METHOD OF CHEMICAL WASTE DISPOSAL
NOS. 1 AND 2 UNITS
HUDSON GENERATING STATION
PUBLIC SERVICE — JERSEY CITY

Hudson Generating Station is situated in Jersey City, New Jersey on the Hackensack River at a point where this stream is classified as a TW-3 stream as set forth in the New Jersey State Department of Health, "Regulations Concerning Classification of the Surface Waters of the Hackensack River Basin," dated December 30, 1965. The latest regulations relating to the criteria of quality to be maintained in a Class TW-3 stream are shown in attached Table I.

No. 1 Unit, rated at 400 mw, was put into service in late 1964 at Hudson Generating Station. Associated with the operation of this unit are certain water treatment facilities required to maintain a high purity of feedwater to the super-critical boiler. The operation of these facilities produces a quantity of chemical waste consisting of dilute solutions of sulfuric acid and caustic soda used to regenerate the ion exchange resins in the mixed bed demineralizers.

In order to properly dispose of these solutions, a disposal basin was installed. The installation and operation of this waste disposal facility was approved by the New Jersey State Department of Health.

Public Service is currently installing No. 2 Unit, rated at 620 mw, at Hudson Generating Station. The design and operation of this unit will be similar to the No. 1 Unit and, as such, will produce an additional amount of partially spent chemical solutions from the regeneration of its mixed bed demineralizers. To dispose of this additional waste, the use of the existing waste disposal facilities, with some modification in operation, is contemplated.

METHOD OF DISPOSAL

Wastes from the regeneration plant will be collected in the chemical waste basin where the acid and alkaline [illegible] are air mixed. From this basin, the waste will be fed at a controlled rate to the flowing water in the circulating water discharge canal. This circulating water is taken from the Hackensack River and pumped through the condensers and into the canal through which it is discharged back into the river. Normally, four circulating water pumps will be in service and the flow through the canal will be 620,0[illegible]

BJB000032

920980334

PROPOSED METHOD OF CHEMICAL WASTE DISPOSAL
NOS. 1 AND 2 UNITS
HUDSON GENERATING STATION
(Continued)

METHOD OF DISPOSAL (Continued):

With the waste flows shown in Table II released at a controlled rate of 100 gpm, a decrease in alkalinity of 0.315 ppm in the canal will result. This will obviously have a negligible effect on the main body of water in the river.

DESCRIPTION OF FACILITIES:

The waste disposal basin has a capacity of 75,000 gallons. The basin is divided into three sections as follows:

Mixing or Surge Section	38,250 gallons
Retention Section	12,750 gallons
Effluent Section	24,000 gallons

The effluent section prevents short circuiting between the inlet and outlet.

The basin is constructed of concrete with a caustic and acid-proof brick lining. Piping to and from the waste basin is rubber-lined and, where necessary, rubber or mastic-coated.

The flow control valve provided in the waste basin outlet can be adjusted to maintain desired outlet flow rates up to a maximum of 100 gpm.

To assure adequate mixing of the waste solutions, air is introduced through a grid in the mixing section. This grid is designed to provide a maximum of 500 scfm of air into a full basin to aerate as well as mix the waste prior to disposal. A pressure regulating valve reduces the 300 psi or 125 psi compressor air discharge to 50 psi for the air grid supply pressure. A locally installed plug valve and orifice is used for the final setting of air required to produce a gentle rolling motion of the basin solution.

In the resin regeneration processes both the cation and anion resins are regenerated simultaneously, producing acid and caustic wastes at the same time. These wastes are directed to a chemical waste tank from which they are pumped out to the waste disposal basin. In actuality, the wastes chemically react with one another in this indoor tank.

920980335

DESCRIPTION OF FACILITIES (Continued)

thus partial neutralization [illegible] before being pumped to the waste basin.

A diffuser is provided at the point where the chemical waste is added to the flowing stream of water in the discharge canal in order to thoroughly disperse the residual chemical solution.

A pH indicator-recorder is provided to monitor the water in the discharge canal below the point of chemical waste addition.

With the addition of chemical waste from the No. 2 Unit, it is anticipated that the operation of the waste basin will be as follows:

QUANTITY OF WASTE

Operating experience on No. 1 Unit has shown that only one regeneration is required per 24-hour period during normal operation. From this experience, we expect that No. 2 Unit will require the same frequency of regenerations for normal operation. When No. 2 Unit goes into service, the capacity of the waste basin will be more than adequate to accommodate the wastes from one regeneration per day on each unit.

However, in order to accommodate unusual operating conditions, we have based our design calculations on twice the normal number of regenerations each day, that is, two regenerations per day on each unit. Under these operating conditions, the combination of acid and alkaline waste from the condensate purification plant will produce a net acid excess of 2,440 pounds per day. The details of the waste flows from the demineralizing plant are shown in Table II entitled, "Regeneration Waste Data, Condensate Purification Systems, Nos. 1 and 2 Units, Hudson Generating Station," dated April 26, 1967.

BOILER ACID CLEANING WASTE

Provision is also made for carrying the spent acid solutions used in boiler chemical cleaning to the waste disposal basin. The size of the waste basin is sufficient to accept a boiler drain during a chemical cleaning operation. [illegible]

920980336

BOILER ACID CLEANING WASTE (Continued)

chemical cleaning will be infrequent and should not occur more than once every one or two years. It is expected that 11,000 gallons of 28 per cent HCl will be used for each boiler cleaning. These solutions will be completely neutralized by adding caustic soda directly to the waste basin from a tank truck, prior to slow release into the circulating water discharge canal. The air mixing grid will be in service during this neutralizing operation.

RESIN CLEANING WASTES

In addition to the wastes described above, it is anticipated that the demineraliser plant ion exchange resins occasionally may require special chemical cleaning.

Such cleaning may result in additional quantities of sodium chloride, caustic soda and hydrochloric acid being discharged to the waste basin. It is expected that these operations, if required at all, will be infrequent and have a negligible effect on the operation of the waste disposal basin. If necessary, neutralizing chemicals will be introduced into the basin to produce a more acceptable effluent.

Held

HCW:CM
Rev. 4-26-67

920980337

TABLE I
NEW JERSEY STATE REGULATIONS
FOR STANDARDS OF QUALITY
TO BE [illegible]
[illegible]

DEFINITION:

Tidal surface waters used primarily for navigation, not recreation. These waters, although not expected to be used for fishing, shall provide for fish survival. These waters shall not be an odor nuisance and shall not cause damage to pleasure craft traversing them.

Criteria

Conditions	Allowable Limits
1. Floating solids, settleable solids, oil and grease.	None which are noticeable in the water or contribute to the formation of sludge deposits along the shores.
2. Toxic and deleterious substances.	None in such concentrations as to cause fish mortality or inhibit their natural migration.
3. Taste and odor producing substances.	None which shall be offensive or that would detrimentally affect finfish, shellfish or other aquatic life in higher quality waters.
4. pH.	Between 6.5 and 8.5 unless naturally outside thereof.
5. Dissolved Oxygen.	Not less than 30 per cent of saturation or 3.. p.., whichever is less.

Hcw

HCW:CM
Rev. 4-26-67

920980338

TABLE III

REGENERATION TEST DATA

CONDENSATE PURIFICATION SYSTEM

UNITS 1 AND 2

HUDSON GENERATING STATION

DESIGN OPERATION

The following values are based on two regenerations per day on each unit:

	Pounds	Chemical
No. 1 Unit Cation Regeneration	2,940	H_2SO_4
No. 2 Unit Cation Regeneration	6,540	H_2SO_4
Total Sulfuric Acid	9,480	
No. 1 Unit Anion Regeneration	1,780	NaOH
No. 2 Unit Anion Regeneration	3,960	NaOH
Total Caustic Soda	5,740	

Acid Neutralized by Caustic = $(5,740)\left(\frac{98}{80}\right)$ = 7,040 pounds

Net Excess Acid = 9,480 - 7,040 = 2,440 pounds per day

Total Demineralized Water used to dilute above chemicals for regeneration processes:

No. 1 Unit	42,000 gallons
No. 2 Unit	108,000 gallons
Total Dilution Water	150,000 gallons

Flow through the discharge canal from:

No. 1 Condenser = (2 circulators) (135,000 gpm) = 270,000 gpm
No. 2 Condenser = (2 circulators) (175,000 gpm) = 350,000 gpm
Total 620,000 gpm
(OR: 5,170,000 lb/min)

It is planned to set the chemical waste basin effluent valve to automatically control the effluent rate at 100 gpm. The excess acid feed rate to the discharge canal would be:

$$\frac{2,440 \text{ lb. Net Excess Acid}}{(5,170,000 \text{ lb/min Dilution})\left(\frac{150,000 \text{ gal. Waste}}{100 \text{ gpm Waste Flow}}\right)} = 0.315 \text{ ppm}$$

OR: Alkalinity decreases in terms of $CaCO_3$ by 0.32 ppm in water containing between 95 and 143 ppm of M.O. alkalinity by laboratory testing over the past three years.

HCW:CM
Rev. 4-26-67

920980339

FILE

PROPOSED METHOD OF CHEMICAL WASTE DISPOSAL NOS. 1 AND 2 UNITS HUDSON GENERATING STATION PUBLIC SERVICE - JERSEY CITY

Hudson Generating Station is situated in Jersey City, New Jersey on the Hackensack River at a point where this stream is classified as a TW-3 stream as set forth in the New Jersey State Department of Health, "Regulations Concerning Classification of the Surface Waters of the Hackensack River Basin," dated December 30, 1965. The latest regulations relating to the criteria of quality to be maintained in a Class TW-3 stream are shown in attached Table I.

No. 1 Unit, rated at 400 mw, was put into service in late 1964 at Hudson Generating Station. Associated with the operation of this unit are certain water treatment facilities required to maintain a high purity of feedwater to the super-critical boiler. The operation of these facilities produces a quantity of chemical waste consisting of dilute solutions of sulfuric acid and caustic soda used to regenerate the ion exchange resins in the mixed bed demineralizers.

In order to properly dispose of these solutions, a disposal basin was installed. The installation and operation of this waste disposal facility was approved by the New Jersey State Department of Health.

Public Service is currently installing No. 2 Unit, rated at 620 mw, at Hudson Generating Station. The design and operation of this unit will be similar to the No. 1 Unit and, as such, will produce an additional amount of partially spent chemical solutions from the regeneration of its mixed bed demineralizers. To dispose of this additional waste, the use of the existing waste disposal facilities, with some modification in operation, is contemplated.

METHOD OF DISPOSAL

Wastes from the regeneration plant will be collected in the chemical waste basin where the acid and alkaline wastes are air mixed. From this basin, the waste will be fed at a controlled rate to the flowing water in the circulating water discharge canal. This circulating water is taken from the Hackensack River and pumped through the condensers and into the canal through which it is discharged back into the river. Normally, four circulating water pumps will be in service and the flow through the canal will be 620,000 g...

920980340

PROPOSED METHOD OF CHEMICAL WASTE DISPOSAL
NOS. 1 AND 2 UNITS
HUDSON GENERATING STATION
(Continued)

METHOD OF DISPOSAL (Continued):

With the waste flows shown in Table II released at a controlled rate of 100 gpm, a decrease in the alkalinity of 0.315 ppm in the canal will result. This will obviously have a negligible effect on the main body of water in the river.

DESCRIPTION OF FACILITIES

The waste disposal basin has a capacity of 75,000 gallons. The basin is divided into three sections as follows:

Mixing or Surge Section	38,250 gallons
Retention Section	12,750 gallons
Effluent Section	24,000 gallons

The effluent section prevents short circuiting between the inlet and outlet.

The basin is constructed of concrete with a caustic and acid-proof brick lining. Piping to and from the waste basin is rubber-lined and, where necessary, rubber or mastic-coated.

The flow control valve provided in the waste basin outlet can be adjusted to maintain desired outlet flow rates up to a maximum of 100 gpm.

To assure adequate mixing of the waste solutions, air is introduced through a grid in the mixing section. This grid is designed to provide a maximum of 500 scfm of air into a full basin to aerate as well as mix the waste prior to disposal. A pressure regulating valve reduces the 300 psi or 125 psi compressor air discharge to 50 psi for the air grid supply pressure. A locally installed plug valve and orifice is used for the final setting of air required to produce a gentle rolling motion of the basin solution.

In the resin regeneration processes both the cation and anion resins are regenerated simultaneously, producing acid and caustic wastes at the same time. These wastes are directed to a chemical waste tank from which they are pumped out to the waste disposal basin. In actuality, the wastes chemically react with one another in this indoor tank,

920980341

DESCRIPTION OF FACILITIES (Continued)

thus partial neutralization is accomplished before being pumped to the waste basin.

A diffuser is provided at the point where the chemical waste is added to the flowing stream of water in the discharge canal in order to thoroughly disperse the residual chemical solution.

A pH indicator-recorder is provided to monitor the water in the discharge canal below the point of chemical waste addition.

With the addition of chemical waste from the No. 2 Unit, it is anticipated that the operation of the waste basin will be as follows:

QUANTITY OF WASTE

Operating experience on No. 1 Unit has shown that only one regeneration is required per 24-hour period during normal operation. From this experience, we expect that No. 2 Unit will require the same frequency of regenerations for normal operation. When No. 2 Unit goes into service, the capacity of the waste basin will be more than adequate to accommodate the wastes from one regeneration per day on each unit.

However, in order to accommodate unusual operating conditions, we have based our design calculations on twice the normal number of regenerations each day, that is, two regenerations per day on each unit. Under these operating conditions, the combination of acid and alkaline waste from the condensate purification plant will produce a net acid excess of 2,440 pounds per day. The details of the waste flows from the demineralizing plant are shown in Table II entitled, "Regeneration Waste Data, Condensate Purification Systems, Nos. 1 and 2 Units, Hudson Generating Station," dated April 26, 1967.

BOILER ACID CLEANING WASTE

Provision is also made for carrying the spent acid solutions used in boiler chemical cleaning to the waste disposal basin. The size of the waste basin is sufficient to accommodate a boiler drain during a chemical cleaning operation. Boiler

920980342

PROPOSED METHOD OF CHEMICAL WASTE DISPOSAL
NOS. 1 AND 2 UNITS
HUDSON GENERATING STATION
(Continued)

BOILER ACID CLEANING WASTE (Continued)

chemical cleaning will be infrequent and should not occur more than once every one or two years. It is expected that 11,000 gallons of 28 per cent HCl will be used for each boiler cleaning. These solutions will be completely neutralized by adding caustic soda directly to the waste basin from a tank truck, prior to slow release into the circulating water discharge canal. The air mixing grid will be in service during this neutralizing operation.

RESIN CLEANING WASTES

In addition to the wastes described above, it is anticipated that the demineralizer plant ion exchange resins occasionally may require special chemical cleaning.

Such cleaning may result in additional quantities of sodium chloride, caustic soda and hydrochloric acid being discharged to the waste basin. It is expected that these operations, if required at all, will be infrequent and have a negligible effect on the operation of the waste disposal basin. If necessary, neutralizing chemicals will be introduced into the basin to produce a more acceptable effluent.

Held

HCW:CM
Rev. 4-26-67

920980343

Public Service Electric and Gas Company

Duffield and Van Keuren Avenues, Jersey City, New Jersey 07306

Hudson Generating Station

August 7, 1970

Mr. Douglas Clark
Supervising Public Health Engineer
State of New Jersey
Department of Health
P.O. Box 1540
Trenton, N.J. 08625

RECEIVED
AUG 12 1970
N.J. STATE DEPT. OF ENVIRONMENTAL PROTECTION
BUREAU OF WATER POLLUTION CONTROL

WASTEWATER TREATMENT FACILITIES
HUDSON GENERATING STATION

Dear Mr. Clark:

On Wednesday, August 5, 1970, Mr. W.E. McCle[illegible]an from your office visited our plant and noted that our ash disposal lake was overflowing slightly into the Hackensack River.

The Station is aware of this situation and we are using maximum efforts to correct the condition. We are presently doing temporary repairs with station personnel. Within the next few days, we expect to have a contractor available to dig [illegible] the overflowing area.

Very truly yours,

R Billings

Superintendent
Hudson Generating Station

BJB000041

920980345

18

920980346

DEP-090
3/91

w Jersey Department of Environmental Protec

COMMUNICATIONS CENTER NOTIFICATION REPORT

43

10-0293

Received 1/30/93

Operator RICH

Reviewed By

RECEIVED
DIVISION OF FACILITY WIDE ENFORC

TD Log# 1503

Case# 93-1-30-1109-45

Notification Type Facility

FEB 2 10 26 AM '93

WATER & HAZARDOUS WASTE ENFORCEMENT METRO BUREAU

Reported By	Affiliation	Phone
JEFFREY JENKINS	HUDSON GEN PSE&G	201-217-3684
Street Address	**Municipality**	**State**
DUFFIELD AVE	JERSEY CITY	NJ

Incident Location: Facility

Site: HUDSON GEN PSE&G			Phone 201-217-3684
Street Address	**Municipality**	**County**	**State**
DUFFIELD AVE	JERSEY CITY	HUDSON	NJ

Location Type Industrial Incident Date 1/30/93 Time 0940

Substance Released WATER
Amount Released ( ): UNKNOWN
ID Known State Liquid CAS# Release Is Continuous
Additional Substances
Substance Contained? N Hazardous Material? N TCPA? N A310 Letter? N
COMU Code 0906 Referral Code 009

Incident Description NJPDES.SPILL

Injuries? N Public Evac? N Facility Evac? N Public Exposure? N
Police On Scene? N Firemen On Scene? N DEP Requested? N Wind Sp/Dir

Contamination Of Land.Water Receiving Water HACKENSACK RIVER

Status at Scene
DISCHARGE WATER LINE TO OUTFALL TO RIVER HAS BROKEN UNDERGROUND. FACILITY IS EXCAVATING TO MAKE REPAIRS

Responsible Party Known

Party HUDSON GEN PSE&G		Phone 201-217-3684
Contact JEFFREY JENKINS		Title LIC OPER
Street Address	**Municipality**	**County** **State**
DUFFIELD AVE	JERSEY CITY	HUDSON NJ

OFFICIALS NOTIFIED

	Name	Affiliation	Phone	Date	Time
NJSP					
MUNIC					
OTHER					

	Name	Affiliation	Method	Date	Time	T/M
1	PETE LYNCH	OEP-WAT Metro	Paged.Faxe	1/30/93	1116	B
2						
3						

COMMENTS

BJBOOOO49

920980347

19

920980348

EP-090
/91

N Jersey Department of Environmental Protec

COMMUNICATIONS CENTER NOTIFICATION REPORT

28-0493

RECEIVED
DIVISION OF FACILITY
WIDE ENF...

Received 4/09/93

TD Log# 5690

Operator JIMH

Reviewed By

APR 13 11 22 AM '93

Case# 93-4-9-1004-04

Notification Type Facility

Reported By MR.CZIGLER

Affiliation [redacted]

WATER & HAZARDOUS WASTE ENFORCEMENT METRO BUREAU

Phone 201-217-3624

Street Address DUFFIELD &VANKUERN

Municipality JERSEY CITY

State NJ

Incident Location: Facility

Site: PSE&G

Street Address DUFFIELD &VANKUERN

Municipality JERSEY CITY

Phone 201-217-3624

County HUDSON

State NJ

Location Type Industrial

Incident Date 4/09/93

Time 0900

Substance Released FLY ASH

Amount Released ( ): UNK

ID Known

State Solid

CAS#

Release Is Terminated

Additional Substances

Substance Contained? Y

Hazardous Material? N

TCPA? N

A310 Letter? N

COMU Code 0906

Referral Code 009

Incident Description Spill

Injuries? N

Public Evac? N

Facility Evac? N

Public Exposure? N

Police On Scene? N

Firemen On Scene? N

DEP Requested? N

Wind Sp/Dir

Contamination Of Water

Receiving Water PLANT CANAL

Status at Scene

SUSPECTED MECHANICAL PROBLEM CAUSED DISCHARGE TO CANAL. COMPANY DOING CLEANUP.

Responsible Party Known

Party PSE&G

Contact MR.CZIGLER

Phone 201-217-3624

Title ENV.COORDINA

Street Address DUFFIELD &VANKUERN

Municipality JERSEY CITY

County HUDSON

State NJ

OFFICIALS NOTIFIED

	Name	Affiliation	Phone	Date	Time
NJSP					
MUNIC					
OTHER					

	Name	Affiliation	Method	Date	Time	T/M
1		OEP-WAT Metro	Faxed.Mail	4/09/93		B
2						
3						

COMMENTS

1643 HRS CZIGLER PHONES TO ADV TD THAT CLEANUP COMPLETE AT 1630HRS. DHK

BJB000052

920980349

47

DEP-090
3/91

Wright

N Jersey Department of Environmental Protec

28-0593

COMMUNICATIONS CENTER NOTIFICATION REPORT

Received 5/13/93

RECEIVED
DIVISION OF [illegible]
SEP [illegible] '93

TD Log# 7931

Operator ROGER

Reviewed By

Case# 93-5-13-1415-01

Reported By: FRANK CZIGLER
Affiliation: PSE&G HUDSON GEN
Phone: 201-217-3672
Street Address: DUFFIELD & VANKEUREN
Municipality: JERSEY CITY
State: NJ

Notification Type: Facility

WASTE ENFORCEMENT
METRO BUREAU

Incident Location: Facility
Site: PSE&G HUDSON GENERATING STA
Phone: 201-217-3672
Street Address: DUFFIELD & VANKEUREN
Municipality: JERSEY CITY
County: HUDSON
State: NJ

Location Type: Industrial
Incident Date: 5/13/93
Time: 1300

Substance Released: FLY ASH
Amount Released (Estimate): 25 GALS
ID: Known
State: Solid
CAS#:
Release Is: Terminated
Additional Substances: WATER & FLY ASH
Substance Contained? N
Hazardous Material? N
TCPA? N
A310 Letter? N
COMU Code: 0906
Referral Code: 009

Incident Description: Spill

Injuries? N
Public Evac? N
Facility Evac? N
Public Exposure? N
Police On Scene? N
Firemen On Scene? N
DEP Requested? N
Wind Sp/Dir

Contamination Of: Land,Water
Receiving Water: HACKENSACK RIVER
Status at Scene:

MATERIAL SPILLED FROM A VAC TRUCK. MATERIAL DID ENTER THE STORM DRAIN & INTO THE RIVER. MATERIAL IS MIX OF FLY ASH & WATER.

Responsible Party: Known
Party: PSE&G HUDSON GENERAT
Phone: 201-217-3672
Contact: FRANK CZIGLER
Title: ENV.COORID
Street Address: DUFFIELD & VANKEUREN
Municipality: JERSEY CITY
County: HUDSON
State: NJ

OFFICIALS NOTIFIED

	Name	Affiliation	Phone	Date	Time
NJSP					
MUNIC					
OTHER					

	Name	Affiliation	Method	Date	Time	T/M
1		DEP-WAT Metro	Faxed	5/13/93		T
2		DFG HQ1	Faxed	5/13/93		T
3						

COMMENTS

BJB000053

920980351

46

Sedlink
Wright

PSEG

RECEIVED
DIVISION OF F...
WIDE ...
MAY 21 1 54 PM '93
WATER & HAZARDOUS
WASTE ENFORCEMENT
METRO BUREAU

Public Service Electric and Gas Company Duffield and Van Keuren Avenues Jersey City, New Jersey 07306-6189

Hudson Generating Station
May 17, 1993

Certified Mail/Return Receipt P 818 024 286

Assistant Director of Enforcement
Division of Water Resources
NJ Department of Environmental Protection and Energy
CN029
401 East State Street
Trenton, New Jersey 08625

RECEIVED
Dept. of Environmental Protection & Energy
MAY 20 1993
Div. of Facility Wide Enforcement
Water & Hazardous Waste Enforcement Element

Re: Confirmation Report
Case No. 93-5-13-1415-01
NJPDES Permit No. NJ0000647

Dear Sir/Madam:

Public Service Electric and Gas Company's ("PSE&G") Hudson Generating Station ("Hudson") is submitting this *written notice* to the New Jersey Department of Environmental Protection and Energy ("NJDEPE" or "Department"), in accordance with the reporting requirements contained within N.J.A.C. 7:14A-3.10 of the New Jersey Pollutant Discharge Elimination System ("NJPDES") regulations. Hudson is located on the Hackensack River between Duffield and Van Keuren Avenues in Jersey City, New Jersey (see attached site map). Hudson's NJPDES permit number is NJ0000647.

DESCRIPTION OF INCIDENT

On May 13, 1993, an estimated 25-50 gallons of potable city water mixed with fly ash ("Supernatant") was released from a vacuum truck located on the south side of #1 and #2 Units, directly adjacent to the Floor Drain Surge Tank. The Supernatant travelled across a paved surface and into a stormwater drain in that vicinity. The release began at approximately 1:00 p.m., and was isolated and secured within 5 minutes. The stormwater drain piping combines with non-contact cooling water drain piping from Hudson's #2 Unit. The two flow streams converge into a single pipe and discharge to the Hackensack River through the permitted NJPDES outfall DSN-366A. DSN-366A is not the designated outfall for the conveyance of the Supernatant. The designated outfall for this type of effluent is DSN-61PA (See the following paragraph).

The fuel source for Hudson's #2 Unit Steam Boiler is low sulfur bituminous coal. Fly ash is a by-product of combustion from burning coal. Presently, the majority of the

BJB000054

95-2184 REV 11/93

150

920980353

fly ash generated by Hudson is sold as a product to cement and macadam manufacturers. When the cement and macadam manufacturers are not in the market for fly ash, it is sluiced into one of Hudson's two settling ponds. The Supernatant from both fly ash ponds is discharged through permitted outfall DSN-61PA. DSN-61PA is the designated outfall for Supernatant.

CAUSE OF THE INCIDENT

The release occurred during a maintenance activity on Hudson's #2 Unit Boiler. Potable city water was being used to sluice the fly ash from the boiler. The mixture of water and fly ash was then drained from the boiler into a PSE&G vacuum truck. The incident occurred when the vacuum truck operator inadvertently opened the rear hatch of the vacuum truck and released some of its contents. The mixture of fly ash and water travelled across the pavement and into a stormwater drain in the immediate vicinity. As soon as the operator became aware of the release, he immediately closed the hatch and secured the release. Hudson employees were dispatched immediately following the incident to contain the release and remove any fly ash residual from the surface of the pavement.

DEPARTMENT NOTIFICATIONS

The Department was notified of the incident via the NJDEPE Hotline (609) 292-7172, at 2:13 p.m. on May 13, 1993. Mr. Frank Czigler, an Environmental Engineer at Hudson (201) 217-3672, contacted Operator #5 and was assigned case #93-5-13-1415-01. Mr. Czigler informed Operator #5 that the release had been quickly secured that clean-up was underway.

The Department was again contacted via the Metro-Bureau of Water and Hazardous Waste Enforcement at 12:10 p.m. on May 14, 1993. Mr. Vince Minetti, an Environmental Engineer at Hudson (201) 217-3676, provided Ms. Helen Wright, a Metro Enforcement Official, with the 24-hour follow up information required under NJAC 7:14A-3.10. Ms. Wright was informed that the incident was very minor in nature, and that the clean-up activities were complete.

CONCLUSIONS

As mentioned earlier, the release primarily consisted of *potable* city water with concentrations of fly ash. The small quantity of fly ash released in this incident was completely saturated with water, and did not create an air borne hazard or nuisance.

Therefore, in view of the quality and quantity released in this incident, PSE&G believes that no harm to human health or the environment has occurred.

If you or your staff require any further details regarding this incident please contact Mr. Vince Minetti, Hudson Environmental Coordinator, at (201) 217-3676.

Very Truly Yours,

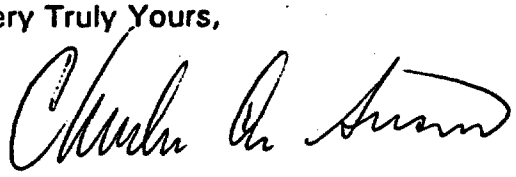

Charles A. Susino
Site Manager
Hudson Generating Station

VAM

HUDISCH5.93

County of Hudson
State of New Jersey

I, Charles A. Susino, Site Manager - Hudson Generating Station, certify under penalty of law that the information provided in this document is true, accurate and complete. I am aware that there are significant civil and criminal penalties for submitting false, inaccurate or incomplete information, including the possibility of fine and/or imprisonment.

Charles A. Susino

Sworn and Subscribed before me
this 18th day of May 1993.

VINCE A. MINETTI
NOTARY PUBLIC OF NEW JERSEY
My Commission Expires Sept. 21, 1997

22

920980357

DEP-090
7/93

Wright

New . ey Department of Environmental Protection a. .nergy

COMMUNICATIONS CENTER NOTIFICATION REPORT

not logged 49

RECEIVED
DIVISION OF FACILITY
WIDE ...

Received 2/15/94

TD Log# 2397

Operator JULIE1

Reviewed By

FEB 17 12 39 PM '94

Case # 12-94-02-15-1317-42

Notification Type Facility

Reported By	Affiliation	Phone
VINCE MINETTI	PSE&G	201-217-3676
Street Address	**Municipality**	**State**
DUFFIELD/VANKEURAN	JERSEY CITY	NJ

WATER ... WASTE ENFORCEMENT METRO BUREAU

Incident Location: Facility

Site: PSE&G/HUDSON GEN STATION			Phone 201-217-3676
Street Address	**Municipality**	**County**	**State**
DUFFIELD/VANKEURAN	JERSEY CITY	HUDSON	NJ

Location Type Industrial Incident Date 2/15/94 Time 1300

Substance Released [redacted] SUSPENDED SOLIDS
Amount Released ([redacted]): UNKNOWN

ID Known State CAS# Release Is Terminated ?

Additional Substances

Substance Contained? N Hazardous Material? N TCPA? N A310 Letter? N

COMU Code 0906 Referral Code 009

Incident Description NJPDES,Permit Violation

Injuries? N Public Evac? N Facility Evac? N Public Exposure? N
Police On Scene? N Firemen On Scene? N DEP Requested? N Wind Sp/Dir

Contamination Of Water Receiving Water HACKENSACK RIVER

Status at Scene
PERMIT EXCEEDENCE FOR 2/8/94 VALUE 135PPM PERMIT LEVEL 100PPM. NJPDES NJ0000647

Responsible Party Known

Party PSE&G HUDSON GEN STN		Phone 201-217-3676
Contact VINCE MINETTI		Title ENVIRO CRDNT
Street Address	**Municipality**	**County** / **State**
DUFFIELD/VANKEURAN	JERSEY CITY	HUDSON / NJ

OFFICIALS NOTIFIED

	Name	Affiliation	Phone	Date	Time
NJSP	OEM	FAXED		2/15/94	
MUNIC					
OTHER					

	Name	Affiliation	Method	Date	Time	T/M
1		OEP-WAT Metro	Faxed,Mail	2/15/94		B
2		DFG HQ1	Faxed	2/15/94		T
3						

COMMENTS

BJB000055

920980358

920980359

Maline

50

PSE&G

RECEIVED
DIVISION OF FACILITY
WIDE ENFORCEMENT

Public Service Electric and Gas Company Duffield and Van Keuren Avenues Jersey City, New Jersey 07306-6189

JUL 10 1 48 PM '95

Hudson Generating Station
June 29, 1995

WATER & HAZARDOUS
WASTE ENFORCEMENT
METRO BUREAU

RECEIVED
Dept. of Environmental Protection & Energy
JUL 07 1995
Div. of Facility Wide Enforcement
Water & Hazardous Waste Enforcement Element

Assistant Director of Enforcement
Division of Water Resources
NJ Department of Environmental Protection and Energy
CN029
401 East State Street
Trenton, New Jersey 08625

Re: **NJPDES Written Notice**
Case No. 95-6-25-0935
NJPDES Permit No. NJ0000647

Certified Mail/Return Receipt P 818-024-393

Dear Sir/Madam:

Public Service Electric and Gas Company's ("PSE&G") Hudson Generating Station ("Hudson") is submitting this *written notice* to the New Jersey Department of Environmental Protection ("NJDEP" or "Department"), in accordance with the reporting requirements contained within N.J.A.C. 7:14A-3.10 of the New Jersey Pollutant Discharge Elimination System ("NJPDES") regulations. Hudson is located on the Hackensack River between Duffield and Van Keuren Avenues in Jersey City, New Jersey.

DESCRIPTION OF INCIDENT

On June 25, 1995, at approximately 0925 hrs., Milton Jones, Senior Shift Supervisor, noticed an oil sheen on the Hackensack River near the vicinity of Hudson's Unit No.1 non-contact cooling water discharge outfall (DSN-365). An initial investigation revealed that No.4 air compressor lubrication oil storage tank was low. The compressor was immediately removed from service and the lubrication oil and cooling water circuits were isolated. The sheen was secured with containment booms by 1130 hrs; clean-up activities were initiated after containment. The United States Coast Guard (USCG) arrived on-site at approximately 1145 hrs. The USCG representatives were satisfied that the leak had been isolated, the spill was properly contained, and clean-up activities were in progress. The USCG issued a *Letter of Observation and Recommendations* and a *Notice of Federal Interest for an Oil Pollution Incident*, and departed at 1400 hrs.

BJB000056 95-2184 REV 11/92 215

920980360

CAUSE OF THE INCIDENT

The incident occurred due to a leak in the air compressor lubrication oil heat exchanger. Lubrication oil is cooled by non-contact cooling water (river water). A preliminary investigation showed that the leak developed in one tube resulting in a loss of lubrication oil from the compressor to the non-contact cooling water, resulting in a discharge to the river via outfall DSN-365.
The exact cause of the failure has not been determined; however, Powerfect Service, Inc. of Livingston, NJ is inspecting the defective heat exchanger to determine the exact cause of failure.

DEPARTMENT NOTIFICATIONS

The Department was notified of the incident via the NJDEP Hotline (609) 292-7172, at 0935 hrs. on June 25, 1995. Mr. Milton Jones, Senior Shift Supervisor, contacted Operator #23 and was assigned Case #95-6-25-0935. Mr. Jones informed Operator #23 that there was a sheen on the river and that No. 4 air compressor lubrication oil compartment was approximately 70 gallons low on oil. Operator #23 was also informed that the suspected source of the leak was isolated, facility personnel were deploying containment booms, and an environmental clean-up contractor was enroute. Mr. Jones made similar notifications to the National Response Center and Jersey City Office of Emergency Management.

A Follow-up notification was made to the Department at 1450 hrs. on June 26, 1995. During this follow-up notification Mr. Steve Leon, Environmental Coordinator, provided Operator #14 with a summary of the incident and the status of the clean-up progress.

CORRECTIVE MEASURES AND CONCLUSIONS

As previously mentioned, Hudson secured and isolated the release shortly after discovery of the oil sheen, and clean-up activities were initiated immediately following containment. The amount of sheen on the river was sporadic and minute; not indicative of a 70 gallon spill. The low oil level in #4 air compressor is partially attributed to the heat exchanger leak, but can be also due to leaks from the compressor piping and valves which are contained in the service building. Therefore it is not possible to ascertain the exact quantity of the spill to the river, but it is certainly less than 70 gallons.

Approximately 90% of the sheen was removed by June 26th. On June 27th the remaining sheen was remediated and the USCG gave permission to remove our containment booms.

920980361

In view of the rapid containment of the sheen and remediation of the release, PSE&G believes that no harm to human health or the environment occurred.

If you or your staff require any further details regarding this incident, please contact Barbara J. Beck-Wilczek, Northern Region Environmental & Safety Manager, at (201) 217-3670.

Very truly yours,

John J. Donleavy
Site Manager
Hudson Generating Station

JJD/sgl

IIUDISCH1.95

920980362

County of Hudson
State of New Jersey

I, John J. Donleavy, Site Manager - Hudson Generating Station, certify under penalty of law that the information provided in this document is true, accurate and complete. I am aware that there are significant civil and criminal penalties for submitting false, inaccurate or incomplete information, including the possibility of fine and/or imprisonment.

John J. Donleavy
Hudson Generating Station

Sworn and Subscribed before me
this 30 day of JUNE 1995.

STEVEN LEON
NOTARY PUBLIC OF NEW JERSEY
My Commission Expires March 9, 2000

File ?
51

PSE&G

Public Service Electric and Gas Company Duffield and Van Keuren Avenues Jersey City, New Jersey 07306-6189

RECEIVED
DIVISION OF FACILITY
WIDE ENFORCEMENT
AUG 27 10 09 AM '96
WATER & HAZARDOUS
WASTE ENFORCEMENT
METRO BUREAU

Hudson Generating Station
August 16, 1996

Certified Mail/Return Receipt P 213-272-945

Assistant Director of Enforcement
Division of Water Resources
NJ Department of Environmental Protection
CN029
401 East State Street
Trenton, New Jersey 08625

Re: **Five Day Written Notice (Case No. 96-8-12-1016-26)**
NJPDES Permit No. NJ0000647

Dear Sir/Madam:

Public Service Electric and Gas Company's ("PSE&G") Hudson Generating Station ("Hudson") is submitting this written notice to the New Jersey Department of Environmental Protection ("NJDEP" or "Department") in accordance with the reporting requirements contained in N.J.A.C. 7:14A-3.10 of the New Jersey Pollutant Discharge Elimination System ("NJPDES") regulations. Hudson is located on the Hackensack River between Duffield and Van Keuren Avenues in Jersey City, New Jersey.

DESCRIPTION OF INCIDENT

On August 12, 1996, Hudson experienced an unanticipated bypass of treatment works involving the discharge of partially-processed wastewater from the Wastewater Treatment Plant ("WTP"). Hudson's lamella gravity separator and oil/water separator were the two components of treatment works involved in the bypass.

The bypass event was discovered at approximately 7:45 a.m. on August 12, 1996, shortly after the start of the day-shift. The bypass was immediately secured upon discovery. The actual duration of the bypass is difficult to determine since the WTP system was unmanned and operated in an automatic-mode from 10:45 a.m. on Sunday August 11, 1996, to 7:30 a.m. on August 12, 1996. The bypass event began sometime during this time period.

The total volume of partially processed effluent discharged during the bypass was, therefore, equally difficult to determine. During the initial notification to the Department on August 12, 1996 (See "Department Notifications" on page 3), PSE&G provided an estimate of 500 gallons of wastewater. Upon further investigation into the discharge capacity of the transfer pumps, the maximum duration of the bypass, and other factors, PSE&G has refined this estimate to include a range of 500 and 200,000 gallons. It is important to note that high end of this gallonage

Printed on recycled paper

estimate is considered to be a worst case scenario, and it is unlikely that this quantity of wastewater was actually released. However, it is impossible to determine the exact volume without knowing the start time of the incident.

Furthermore, upon reviewing the operators logs attached to this submittal, and interviewing the personnel on-site at the time of the incident, PSE&G has not identified any unusual circumstances or operating conditions that would have altered or adversely effected quality of the wastewater during the bypass event. The WTP received only routine flow-streams during the bypass event.

ANALYTICAL RESULTS

Wastewater samples were collected from the source of the release at the time of the incident. Considering the circumstances of the incident; however, the WTP operator could only collect "grab" samples rather than "24-hour composite" samples. Hudson's NJPDES Permit requires the collection of "24-hour composite" samples for all parameters, except total petroleum hydrocarbons, reported on the Discharge Monitoring Report.

The samples were analyzed for the parameters identified in Hudson's NJPDES Permit for outfall DSN-WTPA; these parameters represent the pollutants most likely to be present in Hudson's wastewater. The results of the analyses are presented in the following table and in the NJPDES Laboratory Analysis Report attached to this submittal. A copy of the Chain of Custody Report is also enclosed.

ANALYTICAL RESULTS
(Bypass Event on August 12, 1996)

TEST PARAMETER	CONCENTRATION	PERMIT LIMIT	SAMPLE TYPE (Permit/Actual)
pH	9.2	(No Limit)	Composite/Grab
Total Suspended Solids	62 ppm	100 ppm	Composite/Grab
Total Organic Carbon	2 ppm	50 ppm	Composite/Grab
Total Petroleum Hydrocarbons	9 ppm	15 ppm	Grab/Grab
Total Copper	0.1 ppm	1.0 ppm	Composite/Grab
Total Iron	1.6 ppm	1.0 ppm	Composite/Grab

920980366

As indicated in the table, the only parameter above permit limitations is total iron. However, since the permit requires the collection of 24-hour composite samples, not grab samples, for the analysis of iron this should not be construed as a permit exceedance.

CAUSE OF THE INCIDENT

An investigation was performed immediately following the incident to determine the root cause. The Station initially believed that a leaky control valve was the cause of the incident; this information was provided to the NJDEP Hotline at the time of the bypass (see Department Notifications on page 3). The Station later determined, however, that the control valve was not defective but was rather inadvertently opened. As previously indicated, this time frame was between 10:40 a.m. on Sunday, August 11, 1996, and 7:30 a.m. Monday, August 12, 1996. The opening of this valve caused partially processed wastewater to bypass the oil water separator and lamella gravity separator and discharge directly to the WTP outfall (DSN-WTPA).

CORRECTIVE MEASURES

Although the action of "opening the control valve" was, in-itself, the direct cause of the bypass event, the root cause analysis identified various engineering modifications in need of further investigation. Based upon an evaluation of the results of this investigation, PSE&G anticipates it will either install additional valving or reroute the configuration of the piping to prevent future recurrences. At the present time, the relative merit of these revisions is under review.

During the interim, PSE&G has placed a "blocking tag" on the control valve associated with the bypass incident to prevent its operation. PSE&G will also provide additional training to the employees at Hudson to make them aware of this incident and to describe the actions necessary to prevent reoccurrences.

DEPARTMENT NOTIFICATIONS

The Department was informed of the bypass, via the NJDEP Hotline (609) 292-7172, within the 24-hour time frame required in NJAC 7:14A-3.10(g). The notification was performed by Mr. Chris Price, an environmental consultant representing PSE&G, at 10:15 a.m. on August 12, 1996. Operator #23 received the call and assigned case #96-8-12-1016-26 to the incident. Mr. Price provided the Department with the following details:

- A bypass of approximately 500 gallons of wastewater had occurred,
- The bypass was believed to have been caused by a leaky valve,
- The pH of the wastewater was 9.2,
- Samples were collected and sent to certified lab for analyses,
- The time and date the incident was discovered and secured.

CONCLUSIONS

As demonstrated by the analytical results, the only parameter above permit limitations was total iron. However, since Hudson's NJPDES Permit requires the collection of 24-hour composite samples, not grab samples, for the analysis of iron this should not be construed as a permit exceedance.

If you or your staff require any further details regarding this incident, please contact Mr. James Peach, Senior Environmental Engineer, at 201-217-3672.

Very Truly Yours,

John J. Donleavy
Site Manager
Hudson Generating Station

enclosures

JJD/vam

HUDISCH1.96

County of Hudson
State of New Jersey

I, John J. Donleavy, Site Manager - Hudson Generating Station, certify under penalty of law that the information provided in this document is true, accurate and complete. I am aware that there are significant civil and criminal penalties for submitting false, inaccurate or incomplete information, including the possibility of fine and/or imprisonment.

John J. Donleavy

Sworn and Subscribed before me
this 16th day of August 1996.

VINCE A. MINETTI
NOTARY PUBLIC OF NEW JERSEY
My Commission Expires Sept. 21, 1997

U.S. Environmental Protection Agency

Envirofacts Data Warehouse

Recent Additions | Contact Us | Print Version EF Search: GO

EPA Home > Envirofacts > Multisystem > Report

Report an Error

MultiSystem Report

Envirofacts

PSE&G HUDSON GENERATING STATION
DUFFIELD AVENUE & VAN KEUREN AVENUE
JERSEY CITY, NJ 07306

Map this facility

EPA Facility Information

This query was executed on APR-25-2005

Toxic Releases for Reporting Year 2002

TRI FACILITY ID: 07306HDSNGDUFFI

SIC Codes for 2002

SIC CODE	SIC CODE DESCRIPTION
4911	ELECTRIC SERVICES

Chemicals Transferred to other Sites

CHEMICAL NAME	TRI CHEM ID	DOCUMENT	RELEASE AMOUNTS LBS/YR	RELEASE BASIS CODE	TYPE OF WASTE MANAGEMENT	TRANSFER SI NAME
ARSENIC COMPOUNDS	N020	1302200253692	250	MONITORING DATA		NEW JERSEY MEADOWLAND COMMISSION
BARIUM COMPOUNDS	N040	1302200253704	250	MONITORING DATA		NEW JERSEY MEADOWLAND COMMISSION
CHROMIUM COMPOUNDS(EXCEPT CHROMITE ORE MINED IN THE TRANSVAAL REGION)	N090	1302200253728	250	MONITORING DATA		NEW JERSEY MEADOWLAND COMMISSION

B.3B000099

920980371

COPPER COMPOUNDS	N100	1302200253730	250	MONITORING DATA		NEW JERSEY MEADOWLAND COMMISSION
LEAD COMPOUNDS	N420	1302200253779	68	MONITORING DATA		NEW JERSEY MEADOWLAND COMMISSION
MANGANESE COMPOUNDS	N450	1302200253781	250	MONITORING DATA		NEW JERSEY MEADOWLAND COMMISSION
MERCURY COMPOUNDS	N458	1302200253793	.6	MONITORING DATA		NEW JERSEY MEADOWLAND COMMISSION
NICKEL COMPOUNDS	N495	1302200253805	250	MONITORING DATA		NEW JERSEY MEADOWLAND COMMISSION
POLYCYCLIC AROMATIC COMPOUNDS	N590	1302200253829	16.4	OTHER	OTHER REUSE OR RECOVERY	CLEAN HARBO ENVIRONMENT SERVICES INC.
ZINC COMPOUNDS	N982	1302200253856	250	MONITORING DATA		NEW JERSEY MEADOWLAND COMMISSION

Chemicals Released to Air

CHEMICAL NAME	TRI CHEM ID	DOCUMENT	RELEASE AMOUNTS LBS/YR	RELEASE BASIS CODE	FUGITIVE OR STACK INDICATOR
AMMONIA	007664417	1302200253680	5	OTHER	FUGITIVE OR NON-POINT EMISSIONS
AMMONIA	007664417	1302200253680	53000	MONITORING DATA	STACK OR POINT EMISSIONS
ARSENIC COMPOUNDS	N020	1302200253692	5	OTHER	FUGITIVE OR NON-POINT EMISSIONS
ARSENIC COMPOUNDS	N020	1302200253692	250	PUBLISHED EMISSION FACTORS	STACK OR POINT EMISSIONS
BARIUM COMPOUNDS	N040	1302200253704	5	OTHER	FUGITIVE OR NON-POINT EMISSIONS
BARIUM COMPOUNDS	N040	1302200253704	750	PUBLISHED EMISSION FACTORS	STACK OR POINT EMISSIONS
BENZO(G,H,I)PERYLENE	000191242	1302200253716	1.2	PUBLISHED EMISSION FACTORS	STACK OR POINT EMISSIONS
CHROMIUM COMPOUNDS(EXCEPT CHROMITE ORE MINED IN THE TRANSVAAL REGION)	N090	1302200253728	250	OTHER	FUGITIVE OR NON-POINT EMISSIONS

920980372

CHROMIUM COMPOUNDS(EXCEPT CHROMITE ORE MINED IN THE TRANSVAAL REGION)	N090	1302200253728	750	PUBLISHED EMISSION FACTORS	STACK OR POINT EMISSIONS
COPPER COMPOUNDS	N100	1302200253730	5	OTHER	FUGITIVE OR NON-POINT EMISSIONS
COPPER COMPOUNDS	N100	1302200253730	250	PUBLISHED EMISSION FACTORS	STACK OR POINT EMISSIONS
DIOXIN AND DIOXIN-LIKE COMPOUNDS	N150	1302200253742	.249	PUBLISHED EMISSION FACTORS	STACK OR POINT EMISSIONS
HYDROCHLORIC ACID (1995 AND AFTER "ACID AEROSOLS" ONLY)	007647010	1302200253755	5	OTHER	FUGITIVE OR NON-POINT EMISSIONS
HYDROCHLORIC ACID (1995 AND AFTER "ACID AEROSOLS" ONLY)	007647010	1302200253755	2900000	OTHER	STACK OR POINT EMISSIONS
HYDROGEN FLUORIDE	007664393	1302200253767	5	OTHER	FUGITIVE OR NON-POINT EMISSIONS
HYDROGEN FLUORIDE	007664393	1302200253767	100000	PUBLISHED EMISSION FACTORS	STACK OR POINT EMISSIONS
LEAD COMPOUNDS	N420	1302200253779	6	OTHER	FUGITIVE OR NON-POINT EMISSIONS
LEAD COMPOUNDS	N420	1302200253779	230.4	PUBLISHED EMISSION FACTORS	STACK OR POINT EMISSIONS
MANGANESE COMPOUNDS	N450	1302200253781	250	OTHER	FUGITIVE OR NON-POINT EMISSIONS
MANGANESE COMPOUNDS	N450	1302200253781	250	PUBLISHED EMISSION FACTORS	STACK OR POINT EMISSIONS
MERCURY COMPOUNDS	N458	1302200253793	145.1	PUBLISHED EMISSION FACTORS	STACK OR POINT EMISSIONS
NICKEL COMPOUNDS	N495	1302200253805	250	OTHER	FUGITIVE OR NON-POINT EMISSIONS
NICKEL COMPOUNDS	N495	1302200253805	750	PUBLISHED EMISSION FACTORS	STACK OR POINT EMISSIONS
PENTACHLOROBENZENE	000608935	1302200253817	33	PUBLISHED EMISSION FACTORS	STACK OR POINT EMISSIONS
POLYCYCLIC AROMATIC COMPOUNDS	N590	1302200253829	208.9	PUBLISHED EMISSION FACTORS	STACK OR POINT EMISSIONS

920980373

SULFURIC ACID (1994 AND AFTER "ACID AEROSOLS" ONLY)	007664939	1302200253831	5	OTHEI	
SULFURIC ACID (1994 AND AFTER "ACID AEROSOLS" ONLY)	007664939	1302200253831	140000	PUBLISHI EMISSION FACTORS	
VANADIUM COMPOUNDS	N770	1302200253843	5	OTHER	
VANADIUM COMPOUNDS	N770	1302200253843	750	PUBLISHED EMISSION FACTORS	S PO EMI
ZINC COMPOUNDS	N982	1302200253856	5	OTHER	FUGI NON-P EMISSIO
ZINC COMPOUNDS	N982	1302200253856	1100	PUBLISHED EMISSION FACTORS	STACK O POINT EMISSIO

Chemicals Released to the Land Surface

CHEMICAL NAME	CAS	DOCUMENT	RELEASE AMOUNTS LBS/YR	RELEASE BASIS CODE	LAN DISPO
AMMONIA	007664417	1302200253680	5900	OTHER	OTHER DISPOS
ARSENIC COMPOUNDS	N020	1302200253692	12000	OTHER	OTHER DISPOS
BARIUM COMPOUNDS	N040	1302200253704	130000	OTHER	OTHER DISPOS
CHROMIUM COMPOUNDS(EXCEPT CHROMITE ORE MINED IN THE TRANSVAAL REGION)	N090	1302200253728	22000	OTHER	OTHER DISPOS
COPPER COMPOUNDS	N100	1302200253730	27000	OTHER	OTHER DISPOS
LEAD COMPOUNDS	N420	1302200253779	10586.5	OTHER	OTHER DISPOS
MANGANESE COMPOUNDS	N450	1302200253781	29000	OTHER	OTHER DISPOS
MERCURY COMPOUNDS	N458	1302200253793	103.3	OTHER	OTHER DISPOS
NICKEL COMPOUNDS	N495	1302200253805	20000	OTHER	OTHER DISPOS
VANADIUM COMPOUNDS	N770	1302200253843	44000	OTHER	OTHER DISPOS
ZINC COMPOUNDS	N982	1302200253856	27000	OTHER	OTHER DISPOS

Chemicals Released to Surface Water

CHEMICAL NAME	TRI CHEM	DOCUMENT	RELEASE	RELEASE	STORM	STOI

920980374

	ID		AMOUNTS LBS/YR	BASIS CODE	WATER APPLICABILITY FLAG	WATER PERCENTAGE
AMMONIA	007664417	1302200253680	2900	OTHER	0	(
ARSENIC COMPOUNDS	N020	1302200253692	5	OTHER	0	(
BARIUM COMPOUNDS	N040	1302200253704	5	OTHER	0	(
CHROMIUM COMPOUNDS(EXCEPT CHROMITE ORE MINED IN THE TRANSVAAL REGION)	N090	1302200253728	750	OTHER	0	(
COPPER COMPOUNDS	N100	1302200253730	750	OTHER	0	(
LEAD COMPOUNDS	N420	1302200253779	.8	OTHER	0	(
MANGANESE COMPOUNDS	N450	1302200253781	250	OTHER	0	(
NICKEL COMPOUNDS	N495	1302200253805	750	OTHER	0	(
ZINC COMPOUNDS	N982	1302200253856	250	OTHER	0	(

Chemicals Released via Underground Injection

There was no data of this type reported for this facility.

Additional Information can be obtained from the Toxics Release Inventory System TRIS Query.

Water Discharge Permit Information (PCS)

NPDES: NJ0000647
SIC CODE: 4911 **SIC DESCRIPTION:** ELECTRIC SERVICES

This facility has permits to discharge the following chemical/substances through the points (pipes) listed in the table below:

PARAMETER CODE	PARAMETER DESCRIPTION	NUMBER OF DISCHARGE POINTS
00010	TEMPERATURE, WATER DEG. CENTIGRADE	5
00015	THERMAL DISCHARGE MILLION BTUS PER HR.	1
00400	PH	5
00530	SOLIDS, TOTAL SUSPENDED	3
00680	CARBON, TOT ORGANIC (TOC)	1
01042	COPPER, TOTAL (AS CU)	1
01045	IRON, TOTAL (AS FE)	1
01074	NICKEL TOTAL RECOVERABLE	1
01094	ZINC TOTAL RECOVERABLE	1
45501	PETROL HYDROCARBONS,TOTAL RECOVERABLE	2

920980375

50050	FLOW, IN CONDUIT OR THRU TREATMENT PLANT	8
70295	SOLIDS, TOTAL DISSOLVED	1
TAN3E	LC50 STATRE 96HR ACU MYSID: BAHIA	1

Additional Information can be obtained from Water Discharge Permit Infomation PCS Query.

Water Discharge Permit Information (PCS)

NPDES: NJ0120324
SIC CODE: **SIC DESCRIPTION:**

The current PCS database does not have permitted discharge data for this facility.

LIST OF NAICS CODES AND DESCRIPTIONS

LIST OF PROCESS UNIT INFORMATION FOR GROUP TANK

LIST OF PROCESS UNIT INFORMATION FOR GROUP TANKTRT

Additional Information can be obtained from Water Discharge Permit Infomation PCS Query.

AIRS / AFS Information

PLANT NAME:	PSE&G HUDSON GENERATING STATION	**COMPLIANCE SYSTEM PLANT ID:**	00004
AFS PLANT ID:	00004	**NATIONAL EMISSIONS DATA SYSTEM PLANT ID:**	0021
LATITUDE:	0	**LONGITUDE:**	0
DUNS NUMBER:	094961042	**PRINCIPAL PRODUCT:**	ELECTRICITY
INVENTORY YEAR:	90	**EMERGENCY CONTROL:**	ECAP not required
CLASS CODE:	ACTUAL OR POTENTIAL EMISS ARE ABOVE THE APPLICABLE MAJOR SOURCE THRESHOLD.	**COMPLIANCE STATUS:**	MEETING COMPLIANCE SCHEDULE

The current AIRS/AFS database does not have any pollutant data for this facility.

RCRAInfo

HANDLER ID: NJD094961042

NAICS CODE	NAICS DESCRIPTION
2211	Electric Power Generation, Transmission and Distribution
221112	Fossil Fuel Electric Power Generation

920980376

HANDLER / FACILITY CLASSIFICATION

HANDLER TYPE
Large Generator
Subject Non-TSD

PROCESS CODE / DESCRIPTION	LEGAL OPERATING STATUS	UNIT OF MEASUREMENT TYPE / DESCRIPTION	CAPACITY TYPE / DESCRIPTION	QUANTITY	CAPACITY	EFFECTIVE DATE
S02 - TANK STORAGE	NEVER REGULATED AS A TSD - PROTECTIVE FILER	G - GALLONS	D - DESIGN	2	1300000	19-NOV-80

PROCESS CODE / DESCRIPTION	LEGAL OPERATING STATUS	UNIT OF MEASUREMENT TYPE / DESCRIPTION	CAPACITY TYPE / DESCRIPTION	QUANTITY	CAPACITY	EFFECTIVE DATE
T01 - TANK TREATMENT	NEVER REGULATED AS A TSD - PROTECTIVE FILER	U - GALLONS PER DAY	D - DESIGN	2	4723200	19-NOV-80

Additional Information can be obtained from Resource Conservation and Recovery Information RCRAInfo | Query.

920980377

U.S. Environmental Protection Agency

Facility Registry System (FRS)

Facility Detail Report

FRS

Facility Name:	PSE&G HUDSON GENERATING STATION
Location Address:	DUFFIELD AVENUE & VAN KEUREN AVENUE
Supplemental Address:	
City Name:	JERSEY CITY
State	NJ
County Name:	HUDSON
ZIP/Postal Code:	07306
EPA Region:	02
Congressional District Number:	09
Legislative District Number:	
HUC Code:	02030103
Federal Facility:	NO
Tribal Land :	
Latitude:	40.744472
Longitude:	-74.073111
Method:	GPS CARRIER PHASE STATIC RELATIVE POSITION
Reference Point Description:	PLANT ENTRANCE (GENERAL)
Duns Number:	
Registry ID:	110000581861

Map this facility

Environmental Interests

Information System	Information System ID	Environmental Interest Type	Data Source	Last Updated Date	Supplemental Environment Interests:
AIRS/AFS	NJ0082506	AIR MAJOR	AIRS/AFS	11/01/2001	
CAMDBS	2403	AIR PROGRAM	CAMDBS		
ICIS	33044	ENFORCEMENT/COMPLIANCE ACTIVITY	ICIS		ICIS-02-2001- FORMAL ENFORCEME

920980378

					ACTION
ICIS	33044	FORMAL ENFORCEMENT ACTION	ICIS	06/13/2002	ICIS-02-2001-FORMAL ENFORCEME ACTION
NCDB	I02#2002091810303 1	COMPLIANCE ACTIVITY	NCDB		
NEI	NEI7652	CRITERIA AIR POLLUTANTS INVENTORY	NEI		
NEI	NEI7652	HAZARDOUS AIR POLLUTANTS INVENTORY	NEI		
NJ-NJEMS	15746	STATE MASTER	NJEMS	04/22/2003	- AIR PROGRA - AIR PROGRA - RELEASE ASSESSMEN - EPCRA - HAZARDOUS WASTE PROGRAM - LABORATOR - MINERAL EXPLORATIC - NPDES PERI - STATE CLEA SITE
PCS	NJ0000647	NPDES MAJOR	NPDES PERMIT	04/27/1989	
PCS	NJ0120324	NPDES NON-MAJOR	NPDES PERMIT	02/05/1996	
RCRAINFO	NJD094961042	HAZARDOUS WASTE BIENNIAL REPORTER	RCRAINFO	02/07/2002	
RCRAINFO	NJD094961042	LQG	NOTIFICATION (RCRA)	09/19/2000	
TRIS	07306HDSNGDUFFI	TRI REPORTER	TRI REPORTING FORM	07/02/2001	

Facility Mailing Addresses

Affiliation Type	Delivery Point	City Name	State	Postal Code	Information System
ALTERNATE MAILING ADDRESS	DUFFIELD & VAN KEUREN AVES	JERSEY CITY	NJ	07036	PCS

920980379

CONTACT/GENERAL	DUFFIELD & VAN KEUREN AVE	JERSEY CITY	NJ	07306	TRIS
CONTACT/GENERAL	DUFFIELD & VAN KEUREN AVENUES	JERSEY CITY	NJ	07306	RCRAINFO
CONTACT/GENERAL	DUFFIELD & VAN KEUREN AVES	JERSEY CITY	NJ	07306	PCS
CONTACT/GENERAL	DUFFIELD AND VAN KEUREN	JERSEY CITY	NJ	07101	AIRS/AFS
CONTACT/OWNER	80 PARK PLAZA	NEWARK	NJ	07102	PCS
CONTACT/OWNER	80 PARK PLAZA 15A	NEWARK	NJ	07101	PCS
CONTACT/REGULATORY	DUFFIELD & VAN KEURAN AVE	JERSEY CITY	NJ	07306	RCRAINFO

NAICS Codes

Data Source	NAICS Code	Description	Primary
NEI	2211		
RCRAINFO	221112	FOSSIL FUEL ELECTRIC POWER GENERATION.	

SIC Codes

Data Source	SIC Code	Description	Primary
CAMDBS	4911	ELECTRIC SERVICES	
NEI	4911	ELECTRIC SERVICES	
AIRS/AFS	4911	ELECTRIC SERVICES	
ICIS	4911	ELECTRIC SERVICES	
NCDB	4911	ELECTRIC SERVICES	
PCS	4911	ELECTRIC SERVICES	
TRIS	4911	ELECTRIC SERVICES	

Contacts

Affiliation Type	Full Name	Office Phone	Information System	Mailing Address
COGNIZANT OFFICIAL	EDWARD G WAUGH	2012173670	PCS	
COGNIZANT OFFICIAL	PATRICK COLGAN	9734305640	PCS	
CONTACT/COMPLIANCE	MARK ZAPPACOSTA	2016227000	AIRS/AFS	
CONTACT/GENERAL	MICHAEL G. CULLEN	2012173672	TRIS	
CONTACT/REGULATORY	MICHAEL G CULLEN	2012173672	RCRAINFO	View
CONTACT/TECHNICAL	MICHAEL G. CULLEN	2012173672	TRIS	

920980380

Organizations

Affiliation Type	Name	DUNS Number	Information System	Mailing Address
CONTACT/OPERATOR	PSEG FOSSIL L.L.C.		RCRAINFO	
CONTACT/OWNER	PUBLIC SERVICE ELECTRIC AND GA		PCS	View
CONTACT/OWNER	PSEG FOSSIL LLC		PCS	View
CONTACT/OWNER	PSEG FOSSIL L.L.C.		RCRAINFO	
OWNER/OPERATOR		094961042	AIRS/AFS	
OWNER/OPERATOR	PSEG FOSSIL LLC		CAMDBS	
OWNER/OPERATOR	PSEG POWER, LLC		CAMDBS	

Alternative Names

Alternative Name
HUDSON
HUDSON GENERATING STATION
PSE & G CO. (HUDSON GENERATING)
PSEG FOSSIL LLC - HUDSON GEN STA
PSEG POWER L.L.C. HUDSON GENERATING STATION
PSEG POWER L.L.C. HUDSON GENERATING STATION
PUBLIC SERVICE ELECTRIC & GAS CO.

Query executed on: APR-25-2005

920980381

U.S. Environmental Protection Agency

Water Discharge Permits (PCS)

Report an Error

Query Results

PCS

NPDES: Equal To: NJ0000647

Results are based on data extracted on APR-15-2005

Note: Click on the underlined CORPORATE LINK value for links to that company's environmental web pages.
Click on the underlined MAPPING INFO value to obtain mapping information for the facility.
Click on the underlined NPDES value to view detailed reports on the facility.

Go To Bottom Of The Page

Facility Information

JUL-31-2008

FACILITY NAME:	PSE&G HUDSON GENERATING STATION	NPDES:	NJ0000647
STREET 1:	DUFFIELD AVENUE & VAN KEUREN AVENUE		
CITY:	JERSEY CITY	PERMIT ISSUED DATE:	JUN-18-2003
STATE:	NJ	PERMIT EXPIRED DATE:	JUL-31-2008
ZIP CODE:	07306		
COUNTY NAME:	HUDSON	SIC CODE:	4911 ELECTRIC SERVICES
REGION:	2	MAPPING INFO:	MAP
MAILING NAME:	HUDSON GENERATING STATION		

List of Permitted Discharges

PIPE NUMBER	REPORT DESIGNATOR	PIPE SET QUALIFIER	PIPE DESCRIPTION	PARAMETER CODE	PARAMETER DESCRIPTION
361	A	9	NCCW OUTFALL	00010	TEMPERATURE, WATER DEG. CENTIGRADE
363	A	9	GAS TURBINE NCCW	00010	TEMPERATURE, WATER DEG. CENTIGRADE
364	A	9	NCCW OUTFALL	00010	TEMPERATURE, WATER DEG. CENTIGRADE

920980382

365	A	9	NCCW OUTFALL	00010	TEMPERATURE, WATER DEG. CENTIGRADE
366	A	9	NCCW OUTFALL	00010	TEMPERATURE, WATER DEG. CENTIGRADE
361	A	9	NCCW OUTFALL	00015	THERMAL DISCHARGE MILLION BTUS PER HR.
361	A	9	NCCW OUTFALL	00400	PH
363	A	9	GAS TURBINE NCCW	00400	PH
364	A	9	NCCW OUTFALL	00400	PH
365	A	9	NCCW OUTFALL	00400	PH
366	A	9	NCCW OUTFALL	00400	PH
61P	A	9	FLY ASH	00530	SOLIDS, TOTAL SUSPENDED
61S	A	9	RO REJECT WATER	00530	SOLIDS, TOTAL SUSPENDED
WTP	A	9	TREATMENT PLANT OUTFALL	00530	SOLIDS, TOTAL SUSPENDED
WTP	A	9	TREATMENT PLANT OUTFALL	00680	CARBON, TOT ORGANIC (TOC)
WTP	A	9	TREATMENT PLANT OUTFALL	01042	COPPER, TOTAL (AS CU)
WTP	A	9	TREATMENT PLANT OUTFALL	01045	IRON, TOTAL (AS FE)
WTP	A	9	TREATMENT PLANT OUTFALL	01074	NICKEL TOTAL RECOVERABLE
WTP	A	9	TREATMENT PLANT OUTFALL	01094	ZINC TOTAL RECOVERABLE
61P	A	9	FLY ASH	45501	PETROL HYDROCARBONS,TOTAL RECOVERABLE
WTP	A	9	TREATMENT PLANT OUTFALL	45501	PETROL HYDROCARBONS,TOTAL RECOVERABLE
361	A	9	NCCW OUTFALL	50050	FLOW, IN CONDUIT OR THRU TREATMENT PLANT
363	A	9	GAS TURBINE NCCW	50050	FLOW, IN CONDUIT OR THRU TREATMENT PLANT
364	A	9	NCCW OUTFALL	50050	FLOW, IN CONDUIT OR THRU TREATMENT PLANT
365	A	9	NCCW OUTFALL	50050	FLOW, IN CONDUIT OR THRU TREATMENT PLANT
366	A	9	NCCW OUTFALL	50050	FLOW, IN CONDUIT OR THRU TREATMENT PLANT
61P	A	9	FLY ASH	50050	FLOW, IN CONDUIT OR THRU TREATMENT PLANT
61S	A	9	RO REJECT WATER	50050	FLOW, IN CONDUIT OR THRU TREATMENT PLANT
WTP	A	9	TREATMENT PLANT OUTFALL	50050	FLOW, IN CONDUIT OR THRU TREATMENT PLANT

920980383

61S	A	9	RO REJECT WATER	70295	SOLIDS, TOTAL DISSOLVED
WTP	A	9	TREATMENT PLANT OUTFALL	TAN3E	LC50 STATRE 96HR ACU MYSID. BAHIA

Go To Top Of The Page

Total Number of Facilities Displayed: 1

920980384

U.S. Environmental Protection Agency

Water Discharge Permits (PCS)

Report an Error

Query Results

PCS

NPDES: Equal To: NJ0120324

Results are based on data extracted on APR-15-2005

Note: Click on the underlined CORPORATE LINK value for links to that company's environmental web pages.
Click on the underlined MAPPING INFO value to obtain mapping information for the facility.
Click on the underlined NPDES value to view detailed reports on the facility.

Go To Bottom Of The Page

Facility Information

JUL-31-2008

FACILITY NAME:	PSE&G HUDSON GENERATING STATION	NPDES:	NJ0000647
STREET 1:	DUFFIELD AVENUE & VAN KEUREN AVENUE		
CITY:	JERSEY CITY	PERMIT ISSUED DATE:	JUN-18-2003
STATE:	NJ	PERMIT EXPIRED DATE:	JUL-31-2008
ZIP CODE:	07306		
COUNTY NAME:	HUDSON	SIC CODE:	4911 ELECTRIC SERVICES
REGION:	2	MAPPING INFO:	MAP
MAILING NAME:	HUDSON GENERATING STATION		

List of Permitted Discharges

PIPE NUMBER	REPORT DESIGNATOR	PIPE SET QUALIFIER	PIPE DESCRIPTION	PARAMETER CODE	PARAMETER DESCRIPTION
361	A	9	NCCW OUTFALL	00010	TEMPERATURE, WATER DEG. CENTIGRADE
363	A	9	GAS TURBINE NCCW	00010	TEMPERATURE, WATER DEG. CENTIGRADE
364	A	9	NCCW OUTFALL	00010	TEMPERATURE, WATER DEG. CENTIGRADE

920980385

365	A	9	NCCW OUTFALL	00010	TEMPERATURE, WATER DEG. CENTIGRADE
366	A	9	NCCW OUTFALL	00010	TEMPERATURE, WATER DEG. CENTIGRADE
361	A	9	NCCW OUTFALL	00015	THERMAL DISCHARGE MILLION BTUS PER HR.
361	A	9	NCCW OUTFALL	00400	PH
363	A	9	GAS TURBINE NCCW	00400	PH
364	A	9	NCCW OUTFALL	00400	PH
365	A	9	NCCW OUTFALL	00400	PH
366	A	9	NCCW OUTFALL	00400	PH
61P	A	9	FLY ASH	00530	SOLIDS, TOTAL SUSPENDED
61S	A	9	RO REJECT WATER	00530	SOLIDS, TOTAL SUSPENDED
WTP	A	9	TREATMENT PLANT OUTFALL	00530	SOLIDS, TOTAL SUSPENDED
WTP	A	9	TREATMENT PLANT OUTFALL	00680	CARBON, TOT ORGANIC (TOC)
WTP	A	9	TREATMENT PLANT OUTFALL	01042	COPPER, TOTAL (AS CU)
WTP	A	9	TREATMENT PLANT OUTFALL	01045	IRON, TOTAL (AS FE)
WTP	A	9	TREATMENT PLANT OUTFALL	01074	NICKEL TOTAL RECOVERABLE
WTP	A	9	TREATMENT PLANT OUTFALL	01094	ZINC TOTAL RECOVERABLE
61P	A	9	FLY ASH	45501	PETROL HYDROCARBONS,TOTAL RECOVERABLE
WTP	A	9	TREATMENT PLANT OUTFALL	45501	PETROL HYDROCARBONS,TOTAL RECOVERABLE
361	A	9	NCCW OUTFALL	50050	FLOW, IN CONDUIT OR THRU TREATMENT PLANT
363	A	9	GAS TURBINE NCCW	50050	FLOW, IN CONDUIT OR THRU TREATMENT PLANT
364	A	9	NCCW OUTFALL	50050	FLOW, IN CONDUIT OR THRU TREATMENT PLANT
365	A	9	NCCW OUTFALL	50050	FLOW, IN CONDUIT OR THRU TREATMENT PLANT
366	A	9	NCCW OUTFALL	50050	FLOW, IN CONDUIT OR THRU TREATMENT PLANT
61P	A	9	FLY ASH	50050	FLOW, IN CONDUIT OR THRU TREATMENT PLANT
61S	A	9	RO REJECT WATER	50050	FLOW, IN CONDUIT OR THRU TREATMENT PLANT
WTP	A	9	TREATMENT PLANT OUTFALL	50050	FLOW, IN CONDUIT OR THRU TREATMENT PLANT

920980386

61S	A	9	RO REJECT WATER	70295	SOLIDS, TOTAL DISSOLVED
WTP	A	9	TREATMENT PLANT OUTFALL	TAN3E	LC50 STATRE 96HR ACU MYSID. BAHIA

Go To Top Of The Page

Total Number of Facilities Displayed: 1

920980387

U.S. Environmental Protection Agency

Toxics Release Inventory (TRI)

TRI

Envirofacts Report

Report an Error

Query executed on APR-25-2005
Results are based on data extracted on NOV-08-2004

Click on "View Facility Information" to view EPA Facility information for the facility.

Facility Name:	PSEG POWER LLC HUDSON GENERATING STATION	Mailing Name:	PSEG - HUDSON GENERATING STATION		
Address:	DUFFIELD & VAN KEUREN AVE JERSEY CITY NJ 07306	Mailing Address:	DUFFIELD & VAN KEUREN AVE JERSEY CITY NJ 07306		
County:	HUDSON	Region:	2		
Facility Information:	View Facility Information	TRI ID:	07306HDSNGDUFFI	DUNS Number:	848793910
		FRS ID	110000581861		
TRI Preferred Latitude:		TRI Preferred Longitude:			
Public Contact:	MICHAEL G. CULLEN	Phone:	2012173672		
Parent Company:	PSEG POWER LLC	Parent DUNS:	848793910		

SIC Codes for 2002

SIC CODE	SIC DESCRIPTION
4911	ELECTRIC SERVICES

The above information comes from 2002, which is the latest reporting year on file for this facility. The earliest reporting year on file for this facility is 1998.

Map this facility

Map this facility using one of Envirofact's mapping utilities.

Besides TRI, this facility also does the following:

- has reported air releases under the Clean Air Act
- has permits to discharge to water

More information about these additional regulatory aspects of this facility can be found by pressing the other regulatory data button below.

920980388

Other Regulatory Data

Total Aggregate Releases of TRI Chemicals to the Environment:

For all releases estimated as a range, the mid-point of the range was used in these calculations. This table summarizes the releases reported by the facility. NR - signifies nothing reported by this facility for the corresponding medium.

Total Aggregate Releases of TRI Chemicals excluding Dioxin and Dioxin-like Compounds (Measured in Pounds)

Media	2002	2001	2000	1999	1998
Air Emissions	3199269.6	3312406.1	3260217.3	3502580	2567990
Surface Water Discharges	5660.8	4566.1	4550	4800	6000
Releases to Land	327589.8	33514	0	383700	311900
Underground Injection	NR	NR	NR	NR	NR
Total On-Site Releases	3532520.2	3350486.2	3264767.3	3891080	2885890
Transfer Off-Site to Disposal	0	4899	2701.4	756	443
Total Releases	3532520.2	3355385.2	3267468.7	3891836	2886333

Graphic Summary of this Table

Total Aggregate Releases of Dioxin and Dioxin-like Compounds (Measured in Grams)

Media	2002	2001	2000	1999	1998
Air Emissions	.249	.268	.262	NR	NR
Surface Water Discharges	NR	NR	NR	NR	NR
Releases to Land	NR	NR	NR	NR	NR
Underground Injection	NR	NR	NR	NR	NR
Total On-Site Releases	.249	.268	.262	NR	NR
Transfer Off-Site to Disposal	NR	NR	NR	NR	NR
Total Releases	.249	.268	.262	NR	NR

Graphic Summary of this Table

TRI Chemicals Reported on Form A:

The facility has certified that for each chemical listed below, the annual release did not exeed 500 pounds for the reporting year listed and the listed chemical was not manufactured, processed, or otherwise used in an amount exceeding 1 million pounds in the reporting year. Form A can not be filed for PBT chemicals (except certain instances of reporting lead in stainless steel, brass, or bronze alloys).

Chemical Name	TRI Chemical ID	2002	2001	2000	1999	1998
ARSENIC COMPOUNDS	N020	Not Reported	Not Reported	Reported	Not Reported	Not Reported

920980389

ETHYLENE GLYCOL	000107211	Reported	Not Reported	Not Reported	Not Reported	Not Reported
HYDRAZINE	000302012	Not Reported	Not Reported	Reported	Not Reported	Reported

NOTE:
All chemicals reported below have release or transfer amounts greater than zero. To see a list of all chemicals reported by this facility click here.

Names and Amounts of Chemicals Released to the Environment by Year.

For all releases estimated as a range, the mid-point of the range was used in these calculations. NR - signifies nothing reported for this facility by the corresponding medium. Rows with all "0" or "NR" values were not listed.

Chemical Name	Media	Unit Of Measure	2002	2001	2000	1999	1998
AMMONIA (TRI Chemical ID: 007664417)	AIR FUG	Pounds	5	5	250	250	250
AMMONIA (TRI Chemical ID: 007664417)	AIR STACK	Pounds	53000	56000	62000	72000	4900C
AMMONIA (TRI Chemical ID: 007664417)	OTH DISP	Pounds	5900	0	0	4700	590C
AMMONIA (TRI Chemical ID: 007664417)	WATER	Pounds	2900	1800	2800	1300	250C
ARSENIC COMPOUNDS (TRI Chemical ID: N020)	AIR FUG	Pounds	5	5	NR	250	25C
ARSENIC COMPOUNDS (TRI Chemical ID: N020)	AIR STACK	Pounds	250	250	NR	180	12C
ARSENIC COMPOUNDS (TRI Chemical ID: N020)	DISP NON METALS	Pounds	NR	500	NR	49	5C
ARSENIC COMPOUNDS (TRI Chemical ID: N020)	OTH DISP	Pounds	12000	250	NR	12000	1300C
ARSENIC COMPOUNDS (TRI Chemical ID: N020)	WATER	Pounds	5	5	NR	250	25C
BARIUM COMPOUNDS (TRI Chemical ID: N040)	AIR FUG	Pounds	5	5	250	250	25C
BARIUM COMPOUNDS (TRI Chemical ID: N040)	AIR STACK	Pounds	750	750	730	590	40C
BARIUM COMPOUNDS (TRI Chemical ID: N040)	DISP NON METALS	Pounds	NR	1000	1200	170	NR
BARIUM COMPOUNDS (TRI Chemical ID: N040)	OTH DISP	Pounds	130000	16000	0	160000	12000C
BARIUM COMPOUNDS (TRI Chemical ID: N040)	WATER	Pounds	5	5	250	250	25C
BENZO(G,H,I)PERYLENE (TRI Chemical ID: 000191242)	AIR STACK	Pounds	1.2	3	2.3	NR	NR
BENZO(G,H,I)PERYLENE (TRI Chemical ID: 000191242)	DISP NON METALS	Pounds	NR	NR	.1	NR	NR

920980390

CHROMIUM COMPOUNDS(EXCEPT CHROMITE ORE MINED IN THE TRANSVAAL REGION) (TRI Chemical ID: N090)	AIR FUG	Pounds	250	250	250	250	25C
CHROMIUM COMPOUNDS(EXCEPT CHROMITE ORE MINED IN THE TRANSVAAL REGION) (TRI Chemical ID: N090)	AIR STACK	Pounds	750	750	400	560	40C
CHROMIUM COMPOUNDS(EXCEPT CHROMITE ORE MINED IN THE TRANSVAAL REGION) (TRI Chemical ID: N090)	DISP NON METALS	Pounds	NR	750	250	53	3E
CHROMIUM COMPOUNDS(EXCEPT CHROMITE ORE MINED IN THE TRANSVAAL REGION) (TRI Chemical ID: N090)	OTH DISP	Pounds	22000	2400	0	27000	2200C
CHROMIUM COMPOUNDS(EXCEPT CHROMITE ORE MINED IN THE TRANSVAAL REGION) (TRI Chemical ID: N090)	WATER	Pounds	750	750	250	750	75C
COPPER COMPOUNDS (TRI Chemical ID: N100)	AIR FUG	Pounds	5	5	250	250	25C
COPPER COMPOUNDS (TRI Chemical ID: N100)	AIR STACK	Pounds	250	250	250	560	31C
COPPER COMPOUNDS (TRI Chemical ID: N100)	DISP NON METALS	Pounds	NR	500	250	110	14C
COPPER COMPOUNDS (TRI Chemical ID: N100)	OTH DISP	Pounds	27000	2800	0	38000	3200C
COPPER COMPOUNDS (TRI Chemical ID: N100)	WATER	Pounds	750	750	250	750	75C
DIOXIN AND DIOXIN-LIKE COMPOUNDS (TRI Chemical ID: N150)	AIR STACK	Grams	.249	.268	.262	NR	NR
HYDROCHLORIC ACID (1995 AND AFTER "ACID AEROSOLS" ONLY) (TRI Chemical ID: 007647010)	AIR FUG	Pounds	5	5	250	250	25C
HYDROCHLORIC ACID (1995 AND AFTER "ACID AEROSOLS" ONLY) (TRI Chemical ID: 007647010)	AIR STACK	Pounds	2900000	3000000	2900000	2800000	210000C
HYDROGEN FLUORIDE (TRI Chemical ID: 007664393)	AIR FUG	Pounds	5	5	250	250	25C
HYDROGEN FLUORIDE (TRI Chemical ID: 007664393)	AIR STACK	Pounds	100000	99000	120000	93000	6300C
LEAD COMPOUNDS (TRI Chemical ID: N420)	AIR FUG	Pounds	6	8.3	NR	250	25C
LEAD COMPOUNDS (TRI Chemical ID: N420)	AIR STACK	Pounds	230.4	224.5	NR	230	16C
LEAD COMPOUNDS (TRI Chemical ID: N420)	DISP NON METALS	Pounds	0	287	NR	28	32
LEAD COMPOUNDS (TRI Chemical ID: N420)	OTH DISP	Pounds	10586.5	564	NR	27000	2500C

920980391

LEAD COMPOUNDS (TRI Chemical ID: N420)	WATER	Pounds	.8	1.1	NR	250	250
MANGANESE COMPOUNDS (TRI Chemical ID: N450)	AIR FUG	Pounds	250	250	250	250	250
MANGANESE COMPOUNDS (TRI Chemical ID: N450)	AIR STACK	Pounds	250	250	380	650	490
MANGANESE COMPOUNDS (TRI Chemical ID: N450)	DISP NON METALS	Pounds	NR	500	250	160	NR
MANGANESE COMPOUNDS (TRI Chemical ID: N450)	OTH DISP	Pounds	29000	2100	0	40000	3100
MANGANESE COMPOUNDS (TRI Chemical ID: N450)	WATER	Pounds	250	250	250	250	250
MERCURY COMPOUNDS (TRI Chemical ID: N458)	AIR STACK	Pounds	145.1	137.8	165	NR	NR
MERCURY COMPOUNDS (TRI Chemical ID: N458)	DISP NON METALS	Pounds	0	.6	.7	NR	NR
MERCURY COMPOUNDS (TRI Chemical ID: N458)	OTH DISP	Pounds	103.3	0	0	NR	NR
NICKEL COMPOUNDS (TRI Chemical ID: N495)	AIR FUG	Pounds	250	250	250	250	250
NICKEL COMPOUNDS (TRI Chemical ID: N495)	AIR STACK	Pounds	750	1900	1500	810	460
NICKEL COMPOUNDS (TRI Chemical ID: N495)	DISP NON METALS	Pounds	NR	750	250	46	50
NICKEL COMPOUNDS (TRI Chemical ID: N495)	OTH DISP	Pounds	20000	2500	0	28000	2200
NICKEL COMPOUNDS (TRI Chemical ID: N495)	WATER	Pounds	750	750	250	750	750
PENTACHLOROBENZENE (TRI Chemical ID: 000608935)	AIR STACK	Pounds	33	31	37.5	NR	NR
POLYCYCLIC AROMATIC COMPOUNDS (TRI Chemical ID: N590)	AIR FUG	Pounds	0	.1	.1	NR	NR
POLYCYCLIC AROMATIC COMPOUNDS (TRI Chemical ID: N590)	AIR STACK	Pounds	208.9	206.4	242.4	NR	NR
POLYCYCLIC AROMATIC COMPOUNDS (TRI Chemical ID: N590)	DISP NON METALS	Pounds	NR	111.4	.6	NR	NR
SULFURIC ACID (1994 AND AFTER "ACID AEROSOLS" ONLY) (TRI Chemical ID: 007664939)	AIR FUG	Pounds	5	5	250	250	250
SULFURIC ACID (1994 AND AFTER "ACID AEROSOLS" ONLY) (TRI Chemical ID: 007664939)	AIR STACK	Pounds	140000	150000	170000	530000	35000
VANADIUM COMPOUNDS (TRI Chemical ID: N770)	AIR FUG	Pounds	5	5	250	NR	NR
VANADIUM COMPOUNDS (TRI Chemical ID: N770)	AIR STACK	Pounds	750	750	660	NR	NR

920980392

VANADIUM COMPOUNDS (TRI Chemical ID: N770)	DISP NON METALS	Pounds	NR	NR	250	NR	NR
VANADIUM COMPOUNDS (TRI Chemical ID: N770)	OTH DISP	Pounds	44000	4800	0	NR	NR
VANADIUM COMPOUNDS (TRI Chemical ID: N770)	WATER	Pounds	0	5	250	NR	NR
ZINC COMPOUNDS (TRI Chemical ID: N982)	AIR FUG	Pounds	5	5	250	250	250
ZINC COMPOUNDS (TRI Chemical ID: N982)	AIR STACK	Pounds	1100	1100	1100	1000	650
ZINC COMPOUNDS (TRI Chemical ID: N982)	DISP NON METALS	Pounds	NR	500	250	140	135
ZINC COMPOUNDS (TRI Chemical ID: N982)	OTH DISP	Pounds	27000	2100	0	47000	4100(
ZINC COMPOUNDS (TRI Chemical ID: N982)	WATER	Pounds	250	250	250	250	250

Discharge of Chemicals into Streams or Bodies of Water:

For all releases estimated as a range, the mid-point of the range was used in these calculations. Rows with Release Amount equal to "0" were not listed.

Chemical Name	Year	Unit Of Measure	Release Amount	Stream Or Body of Water
AMMONIA (TRI Chemical ID: 007664417)	2002	Pounds	2900	HACKENSACK RIVER
AMMONIA (TRI Chemical ID: 007664417)	2001	Pounds	1800	HACKENSACK RIVER
AMMONIA (TRI Chemical ID: 007664417)	2000	Pounds	2800	HACKENSACK RIVER
AMMONIA (TRI Chemical ID: 007664417)	1999	Pounds	1300	HACKENSACK RIVER
AMMONIA (TRI Chemical ID: 007664417)	1998	Pounds	2500	HACKENSACK RIVER
ARSENIC COMPOUNDS (TRI Chemical ID: N020)	2002	Pounds	5	HACKENSACK RIVER
ARSENIC COMPOUNDS (TRI Chemical ID: N020)	2001	Pounds	5	HACKENSACK RIVER
ARSENIC COMPOUNDS (TRI Chemical ID: N020)	1999	Pounds	250	HACKENSACK RIVER
ARSENIC COMPOUNDS (TRI Chemical ID: N020)	1998	Pounds	250	HACKENSACK RIVER
BARIUM COMPOUNDS (TRI Chemical ID: N040)	2002	Pounds	5	HACKENSACK RIVER
BARIUM COMPOUNDS (TRI Chemical ID: N040)	2001	Pounds	5	HACKENSACK RIVER

920980393

BARIUM COMPOUNDS (TRI Chemical ID: N040)	2000	Pounds	250	HACKENSACK RIVER
BARIUM COMPOUNDS (TRI Chemical ID: N040)	1999	Pounds	250	HACKENSACK RIVER
BARIUM COMPOUNDS (TRI Chemical ID: N040)	1998	Pounds	250	HACKENSACK RIVER
CHROMIUM COMPOUNDS(EXCEPT CHROMITE ORE MINED IN THE TRANSVAAL REGION) (TRI Chemical ID: N090)	2002	Pounds	750	HACKENSACK RIVER
CHROMIUM COMPOUNDS(EXCEPT CHROMITE ORE MINED IN THE TRANSVAAL REGION) (TRI Chemical ID: N090)	2001	Pounds	750	HACKENSACK RIVER
CHROMIUM COMPOUNDS(EXCEPT CHROMITE ORE MINED IN THE TRANSVAAL REGION) (TRI Chemical ID: N090)	2000	Pounds	250	HACKENSACK RIVER
CHROMIUM COMPOUNDS(EXCEPT CHROMITE ORE MINED IN THE TRANSVAAL REGION) (TRI Chemical ID: N090)	1999	Pounds	750	HACKENSACK RIVER
CHROMIUM COMPOUNDS(EXCEPT CHROMITE ORE MINED IN THE TRANSVAAL REGION) (TRI Chemical ID: N090)	1998	Pounds	750	HACKENSACK RIVER
COPPER COMPOUNDS (TRI Chemical ID: N100)	2002	Pounds	750	HACKENSACK RIVER
COPPER COMPOUNDS (TRI Chemical ID: N100)	2001	Pounds	750	HACKENSACK RIVER
COPPER COMPOUNDS (TRI Chemical ID: N100)	2000	Pounds	250	HACKENSACK RIVER
COPPER COMPOUNDS (TRI Chemical ID: N100)	1999	Pounds	750	HACKENSACK RIVER
COPPER COMPOUNDS (TRI Chemical ID: N100)	1998	Pounds	750	HACKENSACK RIVER
LEAD COMPOUNDS (TRI Chemical ID: N420)	2002	Pounds	.8	HACKENSACK RIVER
LEAD COMPOUNDS (TRI Chemical ID: N420)	2001	Pounds	1.1	HACKENSACK RIVER
LEAD COMPOUNDS (TRI Chemical ID: N420)	1999	Pounds	250	HACKENSACK RIVER
LEAD COMPOUNDS (TRI Chemical ID: N420)	1998	Pounds	250	HACKENSACK RIVER
MANGANESE COMPOUNDS (TRI Chemical ID: N450)	2002	Pounds	250	HACKENSACK RIVER
MANGANESE COMPOUNDS (TRI Chemical ID: N450)	2001	Pounds	250	HACKENSACK RIVER
MANGANESE COMPOUNDS (TRI Chemical ID: N450)	2000	Pounds	250	HACKENSACK RIVER
MANGANESE COMPOUNDS (TRI Chemical ID: N450)	1999	Pounds	250	HACKENSACK RIVER
MANGANESE COMPOUNDS (TRI Chemical ID: N450)	1998	Pounds	250	HACKENSACK RIVER

920980394

NICKEL COMPOUNDS (TRI Chemical ID: N495)	2002	Pounds	750	HACKENSACK RIVER
NICKEL COMPOUNDS (TRI Chemical ID: N495)	2001	Pounds	750	HACKENSACK RIVER
NICKEL COMPOUNDS (TRI Chemical ID: N495)	2000	Pounds	250	HACKENSACK RIVER
NICKEL COMPOUNDS (TRI Chemical ID: N495)	1999	Pounds	750	HACKENSACK RIVER
NICKEL COMPOUNDS (TRI Chemical ID: N495)	1998	Pounds	750	HACKENSACK RIVER
VANADIUM COMPOUNDS (TRI Chemical ID: N770)	2001	Pounds	5	HACKENSACK RIVER
VANADIUM COMPOUNDS (TRI Chemical ID: N770)	2000	Pounds	250	HACKENSACK RIVER
ZINC COMPOUNDS (TRI Chemical ID: N982)	2002	Pounds	250	HACKENSACK RIVER
ZINC COMPOUNDS (TRI Chemical ID: N982)	2001	Pounds	250	HACKENSACK RIVER
ZINC COMPOUNDS (TRI Chemical ID: N982)	2000	Pounds	250	HACKENSACK RIVER
ZINC COMPOUNDS (TRI Chemical ID: N982)	1999	Pounds	250	HACKENSACK RIVER
ZINC COMPOUNDS (TRI Chemical ID: N982)	1998	Pounds	250	HACKENSACK RIVER

Transfer of Chemicals to Off-Site Locations other than POTWs:

Please note that transfer amounts are not included in release totals shown above. For all releases estimated as a range, the mid-point of the range was used in these calculations. Rows with Total Transfer Amount equal to "0" were not listed.

Chemical Name	Year	Unit Of Measure	Total Transfer Amount	Transfer Site Name and Address	Type Of Waste Management
AMMONIA (TRI Chemical ID: 007664417)	2001	Pounds	250	GLOUCESTER COUNTY UTIL. AUTH. PARADISE ROAD, P.O. BOX 340 THOROFARE, NJ 08086	Other Waste Treatment
AMMONIA (TRI Chemical ID: 007664417)	1999	Pounds	5	CLEAN HARBORS SERVICES, INC. 11800 S. STONY ISLAND AVENUE CHICAGO, IL 60617	Energy Recovery
ARSENIC COMPOUNDS (TRI Chemical ID: N020)	2002	Pounds	250	NEW JERSEY MEADOWLANDS COMMISSION 1 DEIKORTE PARK PLAZA LYNDHURST, NJ 07071	Other Landfills

920980395

ARSENIC COMPOUNDS (TRI Chemical ID: N020)	2001	Pounds	250	HACKENSACK MEADOWLANDS DEVELOPMENT COMMISSION 1 DEKORTE PARK PLAZA LYNDHURST, NJ 07071	Landfill/Disposal Surface Impoundment
ARSENIC COMPOUNDS (TRI Chemical ID: N020)	2001	Pounds	250	SKY HAVEN COAL, INC. RR 1 PENFIELD, PA 15849	Unknown
ARSENIC COMPOUNDS (TRI Chemical ID: N020)	1999	Pounds	49	HACKENSACK MEADOWLANDS DEVELOPMENT COMMISSION 100 BALER BLVD. NORTH ARLINGTON, NJ 07031	Landfill/Disposal Surface Impoundment
ARSENIC COMPOUNDS (TRI Chemical ID: N020)	1998	Pounds	36	HACKENSACK MEADOWLANDS DEVELOPMENT COMMISSION 100 BALER BLVD. NORTH ARLINGTON, NJ 07031	Landfill/Disposal Surface Impoundment
ARSENIC COMPOUNDS (TRI Chemical ID: N020)	1998	Pounds	14	SOLID WASTE TRANSFER AND RECYCLING, INC. 422 FRELINGHUYSEN AVE. NEWARK, NJ 07114	Landfill/Disposal Surface Impoundment
BARIUM COMPOUNDS (TRI Chemical ID: N040)	2002	Pounds	250	NEW JERSEY MEADOWLANDS COMMISSION 1 DEIKORTE PARK PLAZA LYNDHURST, NJ 07071	Other Landfills
BARIUM COMPOUNDS (TRI Chemical ID: N040)	2001	Pounds	250	HACKENSACK MEADOWLANDS DEVELOPMENT COMMISSION 1 DEKORTE PARK PLAZA LYNDHURST, NJ 07071	Landfill/Disposal Surface Impoundment
BARIUM COMPOUNDS (TRI Chemical ID: N040)	2001	Pounds	750	SKY HAVEN COAL, INC. RR 1 PENFIELD, PA 15849	Unknown
BARIUM COMPOUNDS (TRI Chemical ID: N040)	2000	Pounds	1200	HACKENSACK MEADOWLANDS DEVELOPMENT COMMISSION 1 DEKORTE PARK PLAZA LYNDHURST, NJ 07071	Landfill/Disposal Surface Impoundment
BARIUM COMPOUNDS (TRI Chemical ID: N040)	1999	Pounds	170	HACKENSACK MEADOWLANDS DEVELOPMENT	Landfill/Disposal Surface Impoundment

920980396

				COMMISSION 100 BALER BLVD. NORTH ARLINGTON, NJ 07031	
BENZO(G,H,I)PERYLENE (TRI Chemical ID: 000191242)	2000	Pounds	.1	HACKENSACK MEADOWLANDS DEVELOPMENT COMMISSION 1 DEKORTE PARK PLAZA LYNDHURST, NJ 07071	Landfill/Disposal Surface Impoundment
CHROMIUM COMPOUNDS(EXCEPT CHROMITE ORE MINED IN THE TRANSVAAL REGION) (TRI Chemical ID: N090)	2002	Pounds	250	NEW JERSEY MEADOWLANDS COMMISSION 1 DEIKORTE PARK PLAZA LYNDHURST, NJ 07071	Other Landfills
CHROMIUM COMPOUNDS(EXCEPT CHROMITE ORE MINED IN THE TRANSVAAL REGION) (TRI Chemical ID: N090)	2001	Pounds	250	HACKENSACK MEADOWLANDS DEVELOPMENT COMMISSION 1 DEKORTE PARK PLAZA LYNDHURST, NJ 07071	Landfill/Disposal Surface Impoundment
CHROMIUM COMPOUNDS(EXCEPT CHROMITE ORE MINED IN THE TRANSVAAL REGION) (TRI Chemical ID: N090)	2001	Pounds	250	GLOUCESTER COUNTY UTIL. AUTH. PARADISE ROAD, P.O. BOX 340 THOROFARE, NJ 08086	Unknown
CHROMIUM COMPOUNDS(EXCEPT CHROMITE ORE MINED IN THE TRANSVAAL REGION) (TRI Chemical ID: N090)	2001	Pounds	250	SKY HAVEN COAL, INC. RR 1 PENFIELD, PA 15849	Unknown
CHROMIUM COMPOUNDS(EXCEPT CHROMITE ORE MINED IN THE TRANSVAAL REGION) (TRI Chemical ID: N090)	2000	Pounds	250	HACKENSACK MEADOWLANDS DEVELOPMENT COMMISSION 1 DEKORTE PARK PLAZA LYNDHURST, NJ 07071	Landfill/Disposal Surface Impoundment
CHROMIUM COMPOUNDS(EXCEPT CHROMITE ORE MINED IN THE TRANSVAAL REGION) (TRI Chemical ID: N090)	1999	Pounds	53	HACKENSACK MEADOWLANDS DEVELOPMENT COMMISSION 100 BALER BLVD. NORTH ARLINGTON, NJ 07031	Landfill/Disposal Surface Impoundment
CHROMIUM COMPOUNDS(EXCEPT CHROMITE ORE MINED IN THE TRANSVAAL REGION) (TRI Chemical ID: N090)	1998	Pounds	26	HACKENSACK MEADOWLANDS DEVELOPMENT COMMISSION 100 BALER BLVD. NORTH ARLINGTON, NJ 07031	Landfill/Disposal Surface Impoundment

920980397

CHROMIUM COMPOUNDS(EXCEPT CHROMITE ORE MINED IN THE TRANSVAAL REGION) (TRI Chemical ID: N090)	1998	Pounds	10	SOLID WASTE TRANSFER AND RECYCLING, INC. 422 FRELINGHUYSEN AVE. NEWARK, NJ 07114	Landfill/Disposal Surface Impoundment
CHROMIUM COMPOUNDS(EXCEPT CHROMITE ORE MINED IN THE TRANSVAAL REGION) (TRI Chemical ID: N090)	1998	Pounds	7600	NAPORANO IRON & METAL COMPANY THE FOOT OF HAWKINS STREET NEWARK, NJ 07102	Metals Recovery
COPPER COMPOUNDS (TRI Chemical ID: N100)	2002	Pounds	250	NEW JERSEY MEADOWLANDS COMMISSION 1 DEIKORTE PARK PLAZA LYNDHURST, NJ 07071	Other Landfills
COPPER COMPOUNDS (TRI Chemical ID: N100)	2001	Pounds	250	HACKENSACK MEADOWLANDS DEVELOPMENT COMMISSION 1 DEKORTE PARK PLAZA LYNDHURST, NJ 07071	Landfill/Disposal Surface Impoundment
COPPER COMPOUNDS (TRI Chemical ID: N100)	2001	Pounds	250	SKY HAVEN COAL, INC. RR 1 PENFIELD, PA 15849	Unknown
COPPER COMPOUNDS (TRI Chemical ID: N100)	2000	Pounds	250	HACKENSACK MEADOWLANDS DEVELOPMENT COMMISSION 1 DEKORTE PARK PLAZA LYNDHURST, NJ 07071	Landfill/Disposal Surface Impoundment
COPPER COMPOUNDS (TRI Chemical ID: N100)	1999	Pounds	110	HACKENSACK MEADOWLANDS DEVELOPMENT COMMISSION 100 BALER BLVD. NORTH ARLINGTON, NJ 07031	Landfill/Disposal Surface Impoundment
COPPER COMPOUNDS (TRI Chemical ID: N100)	1998	Pounds	80	HACKENSACK MEADOWLANDS DEVELOPMENT COMMISSION 100 BALER BLVD. NORTH ARLINGTON, NJ 07031	Landfill/Disposal Surface Impoundment
COPPER COMPOUNDS (TRI Chemical ID: N100)	1998	Pounds	60	SOLID WASTE TRANSFER AND RECYCLING, INC. 422 FRELINGHUYSEN AVE. NEWARK, NJ 07114	Landfill/Disposal Surface Impoundment

920980398

LEAD COMPOUNDS (TRI Chemical ID: N420)	2002	Pounds	68	NEW JERSEY MEADOWLANDS COMMISSION 1 DEIKORTE PARK PLAZA LYNDHURST, NJ 07071	Other Landfills
LEAD COMPOUNDS (TRI Chemical ID: N420)	2001	Pounds	126.5	HACKENSACK MEADOWLANDS DEVELOPMENT COMMISSION 1 DEKORTE PARK PLAZA LYNDHURST, NJ 07071	Landfill/Disposal Surface Impoundment
LEAD COMPOUNDS (TRI Chemical ID: N420)	2001	Pounds	160.5	SKY HAVEN COAL, INC. RR 1 PENFIELD, PA 15849	Unknown
LEAD COMPOUNDS (TRI Chemical ID: N420)	1999	Pounds	28	HACKENSACK MEADOWLANDS DEVELOPMENT COMMISSION 100 BALER BLVD. NORTH ARLINGTON, NJ 07031	Landfill/Disposal Surface Impoundment
LEAD COMPOUNDS (TRI Chemical ID: N420)	1998	Pounds	23	HACKENSACK MEADOWLANDS DEVELOPMENT COMMISSION 100 BALER BLVD. NORTH ARLINGTON, NJ 07031	Landfill/Disposal Surface Impoundment
LEAD COMPOUNDS (TRI Chemical ID: N420)	1998	Pounds	9	SOLID WASTE TRANSFER AND RECYCLING, INC. 422 FRELINGHUYSEN AVE. NEWARK, NJ 07114	Landfill/Disposal Surface Impoundment
MANGANESE COMPOUNDS (TRI Chemical ID: N450)	2002	Pounds	250	NEW JERSEY MEADOWLANDS COMMISSION 1 DEIKORTE PARK PLAZA LYNDHURST, NJ 07071	Other Landfills
MANGANESE COMPOUNDS (TRI Chemical ID: N450)	2001	Pounds	250	HACKENSACK MEADOWLANDS DEVELOPMENT COMMISSION 1 DEKORTE PARK PLAZA LYNDHURST, NJ 07071	Landfill/Disposal Surface Impoundment
MANGANESE COMPOUNDS (TRI Chemical ID: N450)	2001	Pounds	250	SKY HAVEN COAL, INC. RR 1 PENFIELD, PA 15849	Unknown
MANGANESE COMPOUNDS (TRI Chemical ID: N450)	2000	Pounds	250	HACKENSACK MEADOWLANDS DEVELOPMENT COMMISSION	Landfill/Disposal Surface Impoundment

920980399

				1 DEKORTE PARK PLAZA LYNDHURST, NJ 07071	
MANGANESE COMPOUNDS (TRI Chemical ID: N450)	1999	Pounds	160	HACKENSACK MEADOWLANDS DEVELOPMENT COMMISSION 100 BALER BLVD. NORTH ARLINGTON, NJ 07031	Landfill/Disposal Surface Impoundment
MANGANESE COMPOUNDS (TRI Chemical ID: N450)	1998	Pounds	1200	NAPORANO IRON & METAL COMPANY THE FOOT OF HAWKINS STREET NEWARK, NJ 07102	Metals Recovery
MERCURY COMPOUNDS (TRI Chemical ID: N458)	2002	Pounds	.6	NEW JERSEY MEADOWLANDS COMMISSION 1 DEIKORTE PARK PLAZA LYNDHURST, NJ 07071	Other Landfills
MERCURY COMPOUNDS (TRI Chemical ID: N458)	2001	Pounds	.3	HACKENSACK MEADOWLANDS DEVELOPMENT COMMISSION 1 DEKORTE PARK PLAZA LYNDHURST, NJ 07071	Landfill/Disposal Surface Impoundment
MERCURY COMPOUNDS (TRI Chemical ID: N458)	2001	Pounds	.3	SKY HAVEN COAL, INC. RR 1 PENFIELD, PA 15849	Unknown
MERCURY COMPOUNDS (TRI Chemical ID: N458)	2000	Pounds	.7	HACKENSACK MEADOWLANDS DEVELOPMENT COMMISSION 1 DEKORTE PARK PLAZA LYNDHURST, NJ 07071	Landfill/Disposal Surface Impoundment
NICKEL COMPOUNDS (TRI Chemical ID: N495)	2002	Pounds	250	NEW JERSEY MEADOWLANDS COMMISSION 1 DEIKORTE PARK PLAZA LYNDHURST, NJ 07071	Other Landfills
NICKEL COMPOUNDS (TRI Chemical ID: N495)	2001	Pounds	250	HACKENSACK MEADOWLANDS DEVELOPMENT COMMISSION 1 DEKORTE PARK PLAZA LYNDHURST, NJ 07071	Landfill/Disposal Surface Impoundment
NICKEL COMPOUNDS (TRI Chemical ID: N495)	2001	Pounds	250	SKY HAVEN COAL, INC. RR 1 PENFIELD, PA 15849	Unknown

920980400

NICKEL COMPOUNDS (TRI Chemical ID: N495)	2001	Pounds	250	GLOUCESTER COUNTY UTIL. AUTH. PARADISE ROAD, P.O. BOX 340 THOROFARE, NJ 08086	Unknown
NICKEL COMPOUNDS (TRI Chemical ID: N495)	2000	Pounds	250	HACKENSACK MEADOWLANDS DEVELOPMENT COMMISSION 1 DEKORTE PARK PLAZA LYNDHURST, NJ 07071	Landfill/Disposal Surface Impoundment
NICKEL COMPOUNDS (TRI Chemical ID: N495)	1999	Pounds	46	HACKENSACK MEADOWLANDS DEVELOPMENT COMMISSION 100 BALER BLVD. NORTH ARLINGTON, NJ 07031	Landfill/Disposal Surface Impoundment
NICKEL COMPOUNDS (TRI Chemical ID: N495)	1998	Pounds	30	HACKENSACK MEADOWLANDS DEVELOPMENT COMMISSION 100 BALER BLVD. NORTH ARLINGTON, NJ 07031	Landfill/Disposal Surface Impoundment
NICKEL COMPOUNDS (TRI Chemical ID: N495)	1998	Pounds	20	SOLID WASTE TRANSFER AND RECYCLING, INC. 422 FRELINGHUYSEN AVE. NEWARK, NJ 07114	Landfill/Disposal Surface Impoundment
NICKEL COMPOUNDS (TRI Chemical ID: N495)	1998	Pounds	5700	NAPORANO IRON & METAL COMPANY THE FOOT OF HAWKINS STREET NEWARK, NJ 07102	Metals Recovery
POLYCYCLIC AROMATIC COMPOUNDS (TRI Chemical ID: N590)	2002	Pounds	16.4	CLEAN HARBORS ENVIRONMENTAL SERVICES INC. 7515 HARVEST ROAD PRINCE GEORGE, VA 23875	Other Reuse or Recovery
POLYCYCLIC AROMATIC COMPOUNDS (TRI Chemical ID: N590)	2001	Pounds	108.6	LANCASTER OIL 1062 OLD MANHEIM PIKE LANCASTER, PA 17601	Unknown
POLYCYCLIC AROMATIC COMPOUNDS (TRI Chemical ID: N590)	2001	Pounds	2.8	MODERN LANDFILL 4400 MT. PISGAH ROAD YORK, PA 17402	Landfill/Disposal Surface Impoundment
POLYCYCLIC AROMATIC COMPOUNDS (TRI Chemical ID: N590)	2001	Pounds	1.9	CASIE PROTANK 3209 NORTH MILL ROAD VINELAND, NJ 08360	Other Waste Treatment

920980401

POLYCYCLIC AROMATIC COMPOUNDS (TRI Chemical ID: N590)	2000	Pounds	.6	HACKENSACK MEADOWLANDS DEVELOPMENT COMMISSION 1 DEKORTE PARK PLAZA LYNDHURST, NJ 07071	Landfill/Disposal Surface Impoundment
VANADIUM COMPOUNDS (TRI Chemical ID: N770)	2000	Pounds	250	HACKENSACK MEADOWLANDS DEVELOPMENT COMMISSION 1 DEKORTE PARK PLAZA LYNDHURST, NJ 07071	Landfill/Disposal Surface Impoundment
ZINC COMPOUNDS (TRI Chemical ID: N982)	2002	Pounds	250	NEW JERSEY MEADOWLANDS COMMISSION 1 DEIKORTE PARK PLAZA LYNDHURST, NJ 07071	Other Landfills
ZINC COMPOUNDS (TRI Chemical ID: N982)	2001	Pounds	250	HACKENSACK MEADOWLANDS DEVELOPMENT COMMISSION 1 DEKORTE PARK PLAZA LYNDHURST, NJ 07071	Landfill/Disposal Surface Impoundment
ZINC COMPOUNDS (TRI Chemical ID: N982)	2001	Pounds	250	SKY HAVEN COAL, INC. RR 1 PENFIELD, PA 15849	Unknown
ZINC COMPOUNDS (TRI Chemical ID: N982)	2000	Pounds	250	HACKENSACK MEADOWLANDS DEVELOPMENT COMMISSION 1 DEKORTE PARK PLAZA LYNDHURST, NJ 07071	Landfill/Disposal Surface Impoundment
ZINC COMPOUNDS (TRI Chemical ID: N982)	1999	Pounds	140	HACKENSACK MEADOWLANDS DEVELOPMENT COMMISSION 100 BALER BLVD. NORTH ARLINGTON, NJ 07031	Landfill/Disposal Surface Impoundment
ZINC COMPOUNDS (TRI Chemical ID: N982)	1998	Pounds	85	HACKENSACK MEADOWLANDS DEVELOPMENT COMMISSION 100 BALER BLVD. NORTH ARLINGTON, NJ 07031	Landfill/Disposal Surface Impoundment
ZINC COMPOUNDS (TRI Chemical ID: N982)	1998	Pounds	50	SOLID WASTE TRANSFER AND RECYCLING, INC. 422 FRELINGHUYSEN AVE.	Landfill/Disposal Surface Impoundment

920980402

NEWARK, NJ 07114

Summary of Waste Management Activites

Please note that chemical amounts shown here are not included in Total Aggregate Releases shown above.

Summary of Waste Management Activites excluding Dioxin and Dioxin-like Compounds (Measured in Pounds)

Year	On-Site Recycling	Off-Site Recycling	On-Site Energy Recovery	Off-Site Energy Recovery	On-Site Treatment	Off-Site Treatment	Total Amount
2001	0	0	0	0	150000	0	150000
2002	0	16.4	0	0	1500000	0	1500016.4
2003 (Projected)	0	16.4	0	0	1500000	0	1500016.4
2004 (Projected)	0	16.4	0	0	1500000	0	1500016.4

Summary of Waste Management Activites for Dioxin and Dioxin-like Compounds (Measured in Grams)

This facility did not report any waste management activites for Dioxin and Dioxin-like Compounds.

Chemicals Under Waste Management:

Please note that chemical amounts shown here are not included in the Total Aggregate Releases shown above. Transfers to Publicly Owned Treatment Works are listed on a seperate table.

Chemical Name	Year	Unit Of Measure	On-Site Recycling	Off-Site Recycling	On-Site Energy Recovery	Off-Site Energy Recovery	On-Site Treated	Off-Site Treated	Total Amount
POLYCYCLIC AROMATIC COMPOUNDS	2001	Pounds	0	0	0	0	0	0	0
	2002	Pounds	0	16.4	0	0	0	0	16.4
	2003 (Projected)	Pounds	0	16.4	0	0	0	0	16.4
	2004 (Projected)	Pounds	0	16.4	0	0	0	0	16.4
SULFURIC ACID (1994 AND AFTER "ACID AEROSOLS" ONLY)	2001	Pounds	0	0	0	0	150000	0	150000
	2002	Pounds	0	0	0	0	1500000	0	1500000
	2003 (Projected)	Pounds	0	0	0	0	1500000	0	1500000

920980403

	2004 (Projected)	Pounds	0	0	0	0	1500000	0	150000C

Transfer of Chemicals to Publicly Owned Treatment Works (POTW):

This facility did not transfer any chemicals to a Publicly Owned Treatment Works (POTW).

Non Production Releases:

This facility did not report any Non-Production releases.

920980404

Our Family of Companies

email this page

The Hudson Generating Station

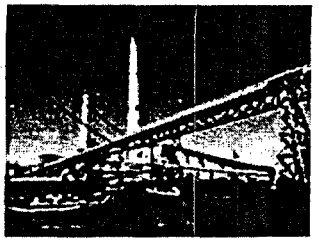

The Hudson Generating Station is a two unit 991 MW station located on a 250 acre site on the Hackensack River in Jersey City, NJ, three miles upstream from Newark Bay.

Unit 1 is a load following unit installed in 1964. It runs mainly on natural gas but can also run on oil. When it began operation, it was the largest unit in the PSEG system.

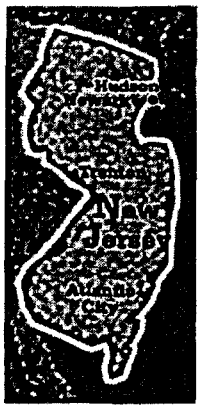

Unit 2 is a load following unit installed in 1968. It runs mainly on coal but can run on natural gas or oil. The unit burns only low sulfur coal to reduce the emissions of sulfur dioxide and utilizes an electrostatic precipitator to control particulate emissions.

The Hudson Generating Station was built on the site of the former Marion Generating Station, the first PSEG plant, which started operation in 1906. The Marion Station was the largest in the PSEG fleet until 1924. The bulk of the Marion station was retired in 1961, as construction on the Hudson Station began.

Key Facts:

Location:	Jersey City, NJ
MW:	991
Fuel:	Coal, Gas, Oil
Technology:	Steam
Commercial Operation:	1964, 1968
Market:	Load Following

BJB000060

920980406

Our Family of Companies

PSEG Power Corporate Leaders

PSEG Corporate Leaders

- Michael J. Thomson
  President - PSEG Fossil LLC
- Harold W. Borden
  Vice President and General Counsel - PSEG Power LLC
- Mark G. Kahrer
  Vice President - Finance and Development

Michael J. Thomson

Michael J. Thomson was named president of PSEG Fossil LLC, a subsidiary of PSEG Power, effective August 1, 2003.

Before coming to PSEG Fossil, Mr. Thomson had been president of PSEG Global L.L.C. (Global) since January 1997. Prior to that he served as a senior vice president for Global since 1993, and was designated chief operating officer in February 1994. In that capacity he was responsible for managing the company's global strategic growth plan, project management and technical services, as well as operations and maintenance activities.

Before coming to Global, Mr. Thomson was employed by the parent holding company, PSEG Energy Holdings Incorporated (Holdings), for three years. As a senior member of the Holdings team, he served successively as business strategy manager for its energy-related businesses in independent power, oil and gas, director of business planning, and vice president of business development and planning.

Prior to joining PSEG in 1990, he worked at Corning for eight years, during which time he held various positions in manufacturing, finance, corporate planning and development.

Mr. Thomson received a bachelor's degree in operations management from Villanova University. He also holds an MBA degree and a master's of accounting degree from Syracuse University. He is also a certified management accountant.

(Back to Top)

Harold W. Borden

Harold W. Borden serves as the vice president and general counsel of PSEG Power LLC, a subsidiary of Public Service Enterprise Group Incorporated (PSEG), that was established in June 1999. PSEG Power is the power generation subsidiary of PSEG, which operates approximately 14,600 mw of fossil and nuclear generation facilities and engages in energy trading activities in the northeast region of the United States. He also serves as the general counsel for PSEG Nuclear LLC and PSEG Fossil LLC, subsidiaries of PSEG Power.

Previously, Mr. Borden had been serving as vice president - law, of Public Service Electric and Gas Company (PSE&G) in Newark, New Jersey.

Mr. Borden holds a bachelor's degree from Lafayette College and a doctor of jurisprudence degree from Seton Hall University School of Law. He first joined PSE&G as an attorney in 1972, and has held numerous different positions since that time.

Mr. Borden is active in several non-profit organizations, including the board of trustees for The Nature Conservancy (N.J. Chapter), The Pingry School, New Jersey SEEDS, the New Jersey Foundation for Public Broadcasting, and the Union Foundation.

(Back to Top)

Mark G. Kahrer

Mark G. Kahrer was elected vice president - finance and development of PSEG Power LLC, in May 2005. He is responsible for financial analysis, reporting, and forecasting; as well as asset acquisition and development activities for Power.

Previously, Mr. Kahrer was assistant treasurer of Public Service Enterprise Group Incorporated (PSEG); responsible for directing the corporate finance department, capital market transactions, and daily oversight of the company's pensions, trusts, and insurance programs. He joined PSEG in 1983 as an accountant, and has held the positions of director – corporate accounting, director – financial risk management, manager – corporate strategic planning, and manager – federal affairs.

Mr. Kahrer is a certified public accountant, holds a Bachelor of Science degree in accounting from Saint Peter's College, and a Master of Business Administration degree in finance from Seton Hall University. He is treasurer of the ARC of Essex County Foundation Board, and a regent of Saint Peter's College. Mr. Kahrer is also a past president of the Saint Peter's College Alumni Association board of trustees.

(Back to Top)

920980408

920980409

27

920980410

Inspections Completed at the PSE&G HUDSON GENERATING STATION Site - ID Number: 15746 Between 1/24/1990 and 4/24/2005

Apr 25, 2005 12:00

NOTE: The information contained in this report will be limited to the date each program began using the Department's integrated database, NJEMS. The programs began using the system for this information as follows: Air - 10/1998; Hazardous Waste - 1/2000; Water - 7/2000; TCPA - 12/2001; Land Use 12/2001; DPCC - 1/2002; Solid Waste - 1/2002; Right To Know - 3/2002 and Pesticides - 4/2002. For complete information prior to these dates, please submit an official OPRA request form to the Department. If printing this report, select landscape orientation. For a list of terms and definitions, click on the following link:http://www.state.nj.us/dep/infoview/enforcement.html

Disclaimer: Only final inspection reports are listed in this report. Inspections for which a report has not been finalized by the Department will not appear in this report. Also, inspections which yield violations but where the inspected entity has not yet been notified of the violation are not listed in this report. For inspections indicating Violations Found, this means that one or more alleged violations were observed during the inspection, based on facts and information known to the Department at the time of the inspection. Errors or omissions in the factual basis for any violation may result in a future change in classification as a violation when such information becomes known.

Program Description: Air

Program Interest Name: PSEG FOSSILL LLC HUDSON GENERATING STATION

Program Interest ID #: 10021

Activity Number	Inspection Type	Start Date of Inspection	Finalized Date	Inspection Results	Inspection Details	Related Enf Actions	Related Violations
SCI 000001	*Standard Compliance Inspection	4/30/99	2/6/00	Violations Found	Inspection Summary	Enforcement Actions	Violations
SUB 000001	(Air) Excess Emission Report	1/23/01	1/26/01	No Violations Found	Inspection Summary	Enforcement Actions	Violations
SUB 000002	(Air) Excess Emission Report	5/19/00	1/26/01	Violations Found	Inspection Summary	Enforcement Actions	Violations
SUB 000003	(Air) Excess Emission Report	1/24/01	1/26/01	No Violations Found	Inspection Summary	Enforcement Actions	Violations
SUB 000004	(Air) Excess Emission Report	8/3/00	1/26/01	Violations Found	Inspection Summary	Enforcement Actions	Violations
SUB 000005	(Air) Excess Emission Report	1/24/01	1/26/01	No Violations Found	Inspection Summary	Enforcement Actions	Violations

BJB000061

920980411

SUB 000006	(Air) Excess Emission Report	1/24/00	1/26/01	Violations Found	Inspection Summary	Enforcement Actions	Violations
SUB 000007	(Air) Excess Emission Report	2/20/01	12/13/01	No Violations Found	Inspection Summary	Enforcement Actions	Violations
SUB 010002	(Air) Excess Emission Report	4/25/01	12/13/01	No Violations Found	Inspection Summary	Enforcement Actions	Violations
SUB 010006	(Air) Excess Emission Report	11/20/01	12/13/01	No Violations Found	Inspection Summary	Enforcement Actions	Violations
SUB 020002	(Air) Excess Emission Report	2/7/02	1/28/03	No Violations Found	Inspection Summary	Enforcement Actions	Violations
SUB 020004	(Air) Excess Emission Report	4/30/02	1/28/03	No Violations Found	Inspection Summary	Enforcement Actions	Violations
SUB 020005	(Air) Excess Emission Report	8/6/02	2/13/03	No Violations Found	Inspection Summary	Enforcement Actions	Violations
SUB 020007	(Air) Excess Emission Report	11/1/02	1/28/03	No Violations Found	Inspection Summary	Enforcement Actions	Violations
SUB 990001	(Air) Excess Emission Report	2/9/99	12/13/01	No Violations Found	Inspection Summary	Enforcement Actions	Violations
SUB 990002	(Air) Excess Emission Report	2/9/99	12/13/01	No Violations Found	Inspection Summary	Enforcement Actions	Violations
SUB 990004	(Air) Excess Emission Report	1/23/01	12/13/01	No Violations Found	Inspection Summary	Enforcement Actions	Violations
SUB 990005	(Air) Excess Emission Report	1/23/01	12/13/01	No Violations Found	Inspection Summary	Enforcement Actions	Violations
SUB 990006	(Air) Excess Emission Report	1/23/01	1/24/01	No Violations Found	Inspection Summary	Enforcement Actions	Violations
SUB 990007	(Air) Excess Emission Report	4/8/99	1/24/01	Violations Found	Inspection Summary	Enforcement Actions	Violations
SUB 990008	(Air) Excess Emission Report	2/2/00	1/26/01	Violations Found	Inspection Summary	Enforcement Actions	Violations
SUB 990009	(Air) Excess Emission Report	1/23/01	1/26/01	No Violations Found	Inspection Summary	Enforcement Actions	Violations
SUB 990010	(Air) Excess Emission Report	2/9/00	1/26/01	Violations Found	Inspection Summary	Enforcement Actions	Violations
SUB 990011	(Air) Excess Emission Report	1/23/01	1/26/01	No Violations Found	Inspection Summary	Enforcement Actions	Violations

Program Description: DPCC

Program Interest Name: PSEG - HUDSON GENERATING STATION

Program Interest ID #: 090601488000

920980412

Activity Number	Inspection Type	Start Date of Inspection	Finalized Date	Inspection Results	Inspection Details	Related Enf Actions	Related Violations
DPC 020001	Plans	7/30/02	8/1/02	No Violations Found	Inspection Summary	Enforcement Actions	Violations
DPC 040001	Plan Amendments	7/30/04	8/12/04	No Violations Found	Inspection Summary	Enforcement Actions	Violations
DPC 050001	Plans	3/23/05	4/4/05	No Violations Found	Inspection Summary	Enforcement Actions	Violations
SCI 030001	*Standard Compliance Inspection	8/27/03	10/15/03	No Violations Found	Inspection Summary	Enforcement Actions	Violations
SCI 040001	*Standard Compliance Inspection	9/29/04	10/20/04	No Violations Found	Inspection Summary	Enforcement Actions	Violations

Program Description: Hazardous Waste

Program Interest Name: PSE&G-HUDSON GENERATING STATION

Program Interest ID #: NJD094961042

Activity Number	Inspection Type	Start Date of Inspection	Finalized Date	Inspection Results	Inspection Details	Related Enf Actions	Related Violations
BCI 000001	*Brief Compliance Inspection	2/8/00	4/27/00	No Violations Found	Inspection Summary	Enforcement Actions	Violations
SCI 020001	*Standard Compliance Inspection	4/10/02	4/19/02	No Violations Found	Inspection Summary	Enforcement Actions	Violations

Program Description: Solid Waste

Program Interest Name: PSEG FOSSIL LLC - HUDSON GEN STATION

Program Interest ID #: 202787

Activity Number	Inspection Type	Start Date of Inspection	Finalized Date	Inspection Results	Inspection Details	Related Enf Actions	Related Violations
BCI 030001	*Brief Compliance Inspection	10/1/03	10/3/03	No Violations Found	Inspection Summary	Enforcement Actions	Violations

Program Description: Water Quality

Program Interest Name: HUDSON GENERATING STATION

Program Interest ID #: 46808

Activity Number	Inspection Type	Start Date of Inspection	Finalized Date	Inspection Results	Inspection Details	Related Enf Actions	Related Violations
NJS 030001	NJPDES Sampling	10/2/02	6/24/03	No Violations Found	Inspection Summary	Enforcement Actions	Violations

920980413

NJS 040001	NJPDES Sampling	2/4/04	6/30/04	No Violations Found	Inspection Summary	Enforcement Actions	Violations
SCI 000001	*Standard Compliance Inspection	11/20/00	12/13/00	No Violations Found	Inspection Summary	Enforcement Actions	Violations
SCI 010001	*Standard Compliance Inspection	11/7/01	12/19/01	Violations Found	Inspection Summary	Enforcement Actions	Violations
SCI 020001	*Standard Compliance Inspection	10/2/02	11/1/02	Violations Found	Inspection Summary	Enforcement Actions	Violations
SCI 030001	*Standard Compliance Inspection	8/20/03	9/9/03	Violations Found	Inspection Summary	Enforcement Actions	Violations
SCI 040001	*Standard Compliance Inspection	7/1/04	7/29/04	No Violations Found	Inspection Summary	Enforcement Actions	Violations

Program Description: **Water Supply**

Program Interest Name: **PSE&G FOSSIL LLC HUDSON GENERATING STATION**

Program Interest ID #: **0816**

Activity Number	Inspection Type	Start Date of Inspection	Finalized Date	Inspection Results	Inspection Details	Related Enf Actions	Related Violations
SCI 030001	*Standard Compliance Inspection	8/20/03	9/9/03	Violations Found	Inspection Summary	Enforcement Actions	Violations
SCI 040001	*Standard Compliance Inspection	7/1/04	7/29/04	No Violations Found	Inspection Summary	Enforcement Actions	Violations

contact dep | privacy notice | legal statement

department: njdep home | about dep | index by topic | programs/units | dep online
statewide: njhome | my new jersey | people | business | government | departments | search

Copyright © State of New Jersey, 1996-2003
Department of Environmental Protection
P. O. Box 402
Trenton, NJ 08625-0402

Last Updated: October 15, 2003

920980414

Inspection Summary Report for PSE&G-HUDSON GENERATING STATION - Activity Number SCI 020001

Apr 24, 2005 11:50

NOTE: The information contained in this report will be limited to the date each program began using the Department's integrated database, NJEMS. The programs began using the system for this information as follows: Air - 10/1998; Hazardous Waste - 1/2000; Water - 7/2000; TCPA - 12/2001; Land Use 12/2001; DPCC - 1/2002; Solid Waste - 1/2002; Right To Know - 3/2002 and Pesticides - 4/2002. For complete information prior to these dates, please submit an official OPRA request form to the Department. If printing this report, select landscape orientation. For a list of terms and definitions, click on the following link:http://www.state.nj.us/dep/infoview/enforcement.html

Disclaimer: Only final inspection reports are listed in this report. Inspections for which a report has not been finalized by the Department will not appear in this report. Also, inspections which yield violations but where the inspected entity has not yet been notified of the violation are not listed in this report. For inspections indicating Out of Compliance, this means that violations were observed during the inspection, based on facts and information known to the Department at the time of the inspection. Errors or omissions in the factual basis for any violation may result in a future change in classification as a violation when such information becomes known.

Activity Number:	SCI 020001	Inspection Type:	*Standard Compliance Inspection	Program Interest ID:	NJD094961042
Inspection Start Date:	04/10/02	End Date:	04/10/02	Lead Investigator:	Mariano, Michael

Program Interest Name: PSE&G-HUDSON GENERATING STATION

Address: DUFFIELD AVE & VAN KEUREN AVE Jersey City NJ 07306 County: Hudson

Block: Lot:

Comments:

This facility was previously inspected on June 24, 1997. No violations were noted during that inspection. PSE&G burns either coal, oil, or natural gas to generate electricity. The fuel is burned in its boiler units to generate steam to turn a turbine that is connected to the generators. Water for the boilers comes from public water supply and is treated to remove impurities that can damage the equipment. Once used, the steam is condensed to liquid and sent through an on site waste water treatment system that removes oils and solids. The water and non-contact cooling water are discharged to the Hackensack River under a NJPDES permit.

The facility has switched its Safety Kleen parts washers from petroleum naphtha to a non-hazardous cleaner. The facility does generate waste paints (D001), lead contaminated sandblast material (D008), mercury switches (D009), lab pack chemicals (various waste codes) and heavy duty lead acid batteries (D002) that are handled as hazardous waste. In July 2001, a 4400 gallon sulfuric acid tank that is used in boiler water treatment leaked into its secondary containment. The contents of the tank and the spilled material were manifested off site as D002 hazardous waste. The tank was put back in service and again leaked in November 2001. The tank was again emptied and has since been condemned. A new 2500 gallon tank will be built in its place. On average, PSE&G generates small quantities of hazardous waste. However, the facility maintains a full contingency plan and training requirements as per LQG regulations. At the time of inspection, there were approximately 4 car batteries in the hazardous waste storage area. PSE&G also generates approximately 1100 gallons of waste oil per month that is stored in drums and a 1000 gallon above ground storage tank.

I reviewed 22 manifests from 2000 to present. No violations were present and no further enforcement action is required.

Subject Item: HGNE 0 - Used Oil Generator Checklist

920980415

Seq. #	Requirement Description	Compliance Status	Compliance Comments	Grace Days	Non Minor Reason	Requirement Source
3156	*USED OIL GENERATOR REQUIREMENTS	Heading				Rules
3159	Used oil generators are subject to all applicable Spill Prevention, Control and Countermeasures regulations (40 C.F.R. Part 112), N.J.A.C. 7:1E, regulations promulgated pursuant to the Federal Clean Air Act, and N.J.A.C. 7:27, in addition to the requirements of this section. Used oil generators are also subject to the Underground Storage Tank requirements of N.J.A.C. 7:14B and 40 C.F.R. Part 280 for used oil stored in underground tanks whether or not the used oil exhibits any characteristics of hazardous waste, in addition to the requirements of this section.[N.J.A.C. 7:26A-6.4(d)1]	In Compliance				Rules
3162	Did the generator store used oil in units regulated under N.J.A.C. 7:26G.[N.J.A.C. 7:26A-6.4(d)2]	In Compliance				Rules
3165	Did the generator ensure that containers and aboveground tanks in good condition and not leaking?.[N.J.A.C. 7:26A-6.4(d)3]	In Compliance				Rules
3168	Did the generator mark all units with the words "Used Oil"?.[N.J.A.C. 7:26A-6.4(d)4]	In Compliance				Rules
3171	Did the generator, upon detection of a release: a. Stop the release. b. Contain the released used oil. c. Clean up and manage properly the released used oil and other materials. d. Repair or replace any leaking used oil storage containers or tanks prior to returning them to service.[N.J.A.C. 7:26A-6.4(d)5]	Not Applicable				Rules
3174	Did the used oil generator burn on-specification used oil in a space heater?.[N.J.A.C. 7:26A-6.4(e)1]	Not Applicable				Rules
3177	Did the used oil generator burn on-specification used oil in a space heater not exceeding a minimum capacity of 0.5 million BTU per hour?.[N.J.A.C. 7:26A-6.4(e)2]	Not Applicable				Rules
3180	Did the used oil generator vent combustion gases from a space heater to ambient air?.[N.J.A.C. 7:26A-6.4(e)3]	Not Applicable				Rules
3181	Did the generator have a permit to construct, install or alter control apparatus or equipment and certificate to to operate control apparatus or equipment or other required authorization prior to buring on-specification used oil in a space heater?. [N.J.A.C. 7:26A-6.4(e)4]	Not Applicable				Rules
3183	Did the used oil generator ensure that their used oil is transported off-site by a transporter with an EPA identification number?.[N.J.A.C. 7:26A-6.4(f)]	In Compliance				Rules

Subject Item: **HSQG 0 - Generator SQG Reqts**

Seq. #	Requirement Description	Compliance Status	Compliance Comments	Grace Days	Non Minor Reason	Requirement Source
28	*GENERATOR REQUIREMENTS	Heading				Rules
31	Did the generator determine if its solid waste is hazardous?.[40 CFR 262.11]	In Compliance				Rules
34	Did the generator obtain an EPA ID number?.[40 CFR 262.12(a)]	In Compliance				Rules
37	Does the generator offer hazardous waste to a transporter or TSD that has an EPA ID number and/or is properly licensed and registered with the Department?. [40 CFR 262.12(c)]	In Compliance				Rules

920980416

40	*THE MANIFEST	Heading				Rules
43	Did the generator prepare a manifest before transporting or offering for transport hazardous waste off-site?.[40 CFR 262.20(a)]	In Compliance				Rules
46	Did the generator designate an authorized facility on the manifest?.[40 CFR 262.20(b)]	In Compliance				Rules
49	Did the generator designate an alternate facility or accept waste back in the event the transporter could not deliver the waste?.[40 CFR 262.20(d)]	In Compliance				Rules
52	Did the generator use approved manifest forms from the Department for intrastate shipments of hazardous waste in New Jersey or for hazardous waste originating in another state destined for New Jersey?.[40 CFR 262.21(a)]	In Compliance				Rules
55	Did the generator use approved manifest forms for hazardous waste originating in New Jersey and destined for another state?.[40 CFR 262.21(b)]	In Compliance				Rules
58	Did the generator sign the manifest?.[40 CFR 262.23(a)(1)]	In Compliance				Rules
61	Did the generator obtain the signature of initial transporter and date of acceptance on the manifest?.[40 CFR 262.23(a)(2)]	In Compliance				Rules
64	Did the generator retain one copy of manifest or forward one copy to the state of origin or one to the state of destination?.[40 CFR 262.23(a)(3)]	In Compliance				Rules
67	Did the generator supply the transporter with remaining copies of manifest?.[40 CFR 262.23(b)]	In Compliance				Rules
70	Did the generator shipping hazardous waste within the U.S. solely by water send 3 copies of the manifest form signed and dated to the owner or operator of the designated facility or last water transporter in the U.S.?.[40 CFR 262.23(c)]	Not Applicable				Rules
73	Did the generator send at least 3 copies of the signed and dated manifest for rail shipments of hazardous waste within the U.S. to next non-rail transporter, designated facility, or last rail transporter in the U.S.?.[40 CFR 262.23(d)]	Not Applicable				Rules
76	*PRE-TRANSPORT REQUIREMENTS	Heading				Rules
79	Did the generator package hazardous waste in accordance with 49 C.F.R. Parts 173, 178, and 179?.[40 CFR 262.30]	Not Applicable	No waste prepared for shipment on site.			Rules
82	Did the generator label each package of hazardous waste in accordance with 49 C.F.R. Part 172?.[40 CFR 262.31]	Not Applicable				Rules
85	Did the generator mark packages of hazardous waste in accordance with 49 C.F.R. Part 172?.[40 CFR 262.32(a)]	Not Applicable				Rules
88	Did the generator mark each container of hazardous waste with the proper wording or to display the wording in accordance with 49 C.F.R. 172.304?.[40 CFR 262.32(b)]	Not Applicable				Rules
91	Did the generator placard or offer appropriate placard for a vehicle containing hazardous waste in accordance with 49 C.F.R. Part 172, Subpart F?.[40 CFR 262.33]	Not Applicable				Rules
100	Did the generator clearly mark container with date when accumulation period begins?.[40 CFR 262.34(a)(2)]	In Compliance				Rules

920980417

103	Did the generator make mark visible for inspection?.[40 CFR 262.34(a)(2*)]	In Compliance				Rules
106	Did the generator clearly mark each container or tank with the words "Hazardous Waste"?.[40 CFR 262.34(a)(3)]	In Compliance	- ——			Rules
124	Did the generator of greater than 100 kg but less than 1000 kg ship waste off site within 180 days?.[40 CFR 262.34(d)]	In Compliance				Rules
127	Did the generator of greater than 100 kg but less than 1000 kg ensure quantity of waste never exceeds 6000 kg?.[40 CFR 262.34(d)(1)]	In Compliance				Rules
130	Did the generator of greater than 100 kg but less than 1000 kg comply with emergency response requirements?.[40 CFR 262.34(d)(5)]	In Compliance				Rules
133	Did the generator of greater than 100 kg but less than 1000 kg of hazardous waste, who transports his waste over 200 miles, ship waste off site within 270 days?.[40 CFR 262.34(e)]	In Compliance				Rules
136	Did the generator of greater than 100 kg but less than 1000 kg of hazardous waste, who exceeds the accumulation quantity or period, comply with the disposal facility requirements?.[40 CFR 262.34(f)]	Not Applicable				Rules
139	*RECORDKEEPING AND REPORTING	Heading				Rules
142	Did the generator keep copy of manifest for 3 years?.[40 CFR 262.40(a)]	In Compliance				Rules
148	Did the generator keep records of any test results, waste analyses, or other determinations for 3 years?.[40 CFR 262.40(c)]	In Compliance				Rules
151	Did the generator keep copies of required records during the course of unresolved enforcement action or as requested by the Department?.[40 CFR 262.40(d)]	Not Applicable				Rules
163	Did the generator of greater than 100 kg but less than 1000 kg of hazardous waste comply with exception reporting requirements?.[40 CFR 262.42(b)]	In Compliance				Rules
193	*STATE ONLY GENERATOR REQUIREMENTS	Heading				Rules
205	Does the generator properly complete the manifest?.[N.J.A.C. 7:26G-6.1(c)5]	In Compliance				Rules
214	Did the generator use proper waste code(s) that accurately describe the shipment of hazardous waste, determined according to the waste hierarchy?.[N.J.A.C. 7:26G-6.2]	In Compliance				Rules
220	Did the transporter contact generator for instructions or did the generator give transporter instructions when a facility immediately rejects all or part of a shipment of hazardous waste or the transporter is unable to deliver the hazardous waste to the designated facility?.[N.J.A.C. 7:26G-6.3(a)1]	Not Applicable				Rules
223	Did the generator comply with manifest requirements for shipments of hazardous waste returned to the generator?.[N.J.A.C. 7:26G-6.3(a)1i]	Not Applicable				Rules
244	Did the generator comply with manifest requirements when a facility rejects all or part of a shipment of hazardous waste and the manifest has been distributed by the facility?.[N.J.A.C. 7:26G-6.3(a)2]	Not Applicable				Rules
1510	*PREPAREDNESS AND PREVENTION	Heading				Rules

920980418

1513	Did the facility maintain or operate facility to minimize possibilities of fire, explosion or releases of hazardous waste or hazardous waste constituents?.[40 CFR 265.31]	In Compliance				Rules
1516	Was the facility equipped with emergency equipment?.[40 CFR 265.32]	In Compliance				Rules
1519	Did the facility test and maintain emergency equipment?.[40 CFR 265.33]	In Compliance				Rules
1522	Did the facility maintain access to communications or alarm system?.[40 CFR 265.34]	In Compliance				Rules
1525	Did the facility maintain sufficient aisle space for the unobstructed movement of personnel or equipment in an emergency?.[40 CFR 265.35]	In Compliance				Rules
1528	Did the facility make required arrangements with police or fire departments, emergency response contractors, equipment suppliers, or local hospitals, or document any such authority's refusal of such arrangements?.[40 CFR 265.37]	In Compliance				Rules
1855	*USE AND MANAGEMENT OF CONTAINERS	Heading				Rules
1858	Did the facility handle hazardous waste in containers of good condition?.[40 CFR 265.171]	In Compliance				Rules
1861	Did the facility use container compatible with hazardous waste stored?.[40 CFR 265.172]	In Compliance				Rules
1864	Did the facility comply with requirements for the management of containers?.[40 CFR 265.173]	In Compliance				Rules
1867	Did the facility perform inspection of each area where containers are stored?.[40 CFR 265.174]	In Compliance				Rules
1873	Did the facility comply with each of the special requirements for incompatible wastes?.[40 CFR 265.177]	In Compliance				Rules
2644	*LAND DISPOSAL RESTRICTIONS - GENERAL	Heading				Rules
2656	Did the generator ensure that a restricted waste is not in any way diluted as a substitute for treatment?.[40 CFR 268.3(a)]	In Compliance				Rules
2674	Did the generator determine if the hazardous waste is restricted from land disposal?.[40 CFR 268.7(a)(1)]	In Compliance				Rules
2677	Did the generator send a one-time written notice with the initial waste shipment to the treatment or storage facility when the waste does not meet the treatment standard or place a copy in the file?.[40 CFR 268.7(a)(2)]	In Compliance				Rules
2680	Did the generator send a one-time written notice and certification with the initial waste shipment to the treatment, storage, or disposal facility when the waste meets the treatment standard or place a copy in the file? [40 CFR 268.7(a)(3)]	In Compliance				Rules
2683	Did the generator of waste exempt from meeting treatment standards before being land disposed send a one-time written notice with the initial waste shipment to the land disposal facility or place a copy in the file?.[40 CFR 268.7(a)(4)]	In Compliance				Rules
2686	Did the generator who is managing and treating prohibited waste develop and follow a written waste analysis plan or keep plan on site?.[40 CFR 268.7(a)(5)]	In Compliance				Rules

920980419

2689	Did the generator retain on site all data used to determine if a waste is restricted?.[40 CFR 268.7(a)(6)]	In Compliance				Rules
2692	Did the generator keep a one-time notice on site stating that he is managing a restricted waste that is excluded from the definition of hazardous or solid waste subsequent to the point of generation and noting the disposition of the waste?.[40 CFR 268.7(a)(7)]	In Compliance				Rules
2695	Did the generator retain documentation required by 268.7 for 3 years or longer during the course of any unresolved enforcement action or as requested by the Department?.[40 CFR 268.7(a)(8)]	Not Applicable				Rules
2698	Did the generator using the alternative treatment standards for lab packs send a one-time written notice and certification with the initial waste shipment to the treatment facility or place a copy in the file?.[40 CFR 268.7(a)(9)]	In Compliance				Rules
2701	Did the small quantity generator with tolling agreements comply with applicable notification and certification requirements for the initial shipment of waste subject to the tolling agreement or retain copy(s) on site?.[40 CFR 268.7(a)(10)]	Not Applicable				Rules
2746	Did the generators who first claim that hazardous debris is excluded from the definition of hazardous waste meet the proper notification and certification requirements?.[40 CFR 268.7(d)]	Not Applicable				Rules
2755	Did the generator of a waste that displays a hazardous characteristic determine the underlying hazardous constituents in the waste?.[40 CFR 268.9(a)]	In Compliance				Rules
2758	Did the generator ensure a prohibited waste exhibiting a characteristic complies with the treatment standards under 268, Subpart D before being land disposed?.[40 CFR 268.9(c)]	In Compliance				Rules
2761	Did the generator of a waste that once exhibited a characteristic but is no longer hazardous place a one-time notification and certification in its files or send to the Department?.[40 CFR 268.9(d)]	Not Applicable				Rules
2776	*PROHIBITIONS ON LAND DISPOSAL	Heading				Rules
2785	Did they comply with land disposal prohibitions of wood preserving wastes?.[40 CFR 268.30]	Not Applicable				Rules
2794	Did they comply with land disposal prohibitions of dioxin-containing wastes?.[40 CFR 268.31]	Not Applicable				Rules
2803	Did they comply with land disposal prohibitions of organobromine wastes?.[40 CFR 268.33]	Not Applicable				Rules
2812	Did they comply with land disposal prohibitions of toxicity characteristic metal wastes?.[40 CFR 268.34]	Not Applicable				Rules
2821	Did they comply with land disposal prohibitions of petroleum refining wastes?.[40 CFR 268.35]	Not Applicable				Rules
2836	Did they comply with land disposal prohibitions of newly identified organic toxicity characteristic wastes and newly listed coke by-product and chlorotoluene production wastes?.[40 CFR 268.38]	Not Applicable				Rules
2845	Did they comply with land disposal prohibitions of spent aluminum potliners; reactive; and carbamate wastes?.[40 CFR 268.39]	Not Applicable				Rules
2854	*TREATMENT STANDARDS	Heading				Rules
2863	Did they meet treatment standard requirements found in the table in 268.40 before land disposing of prohibited waste?.[40 CFR 268.40]	In Compliance				Rules

920980420

2872	Did they meet treatment standards before land disposing for hazardous debris?.[40 CFR 268.45]	In Compliance				Rules
2881	Did they meet treatment standards for underlying hazardous constituents?.[40 CFR 268.48]	In Compliance				Rules

contact dep | privacy notice | legal statement

department: nidep home | about dep | index by topic | programs/units | dep online
statewide: nihome | my new jersey | people | business | government | departments | search

Copyright © State of New Jersey, 1996-2003
Department of Environmental Protection
P. O. Box 402
Trenton, NJ 08625-0402

Last Updated: October 15, 2003

920980421

Inspection Summary Report for HUDSON GENERATING STATION - Activity Number SCI 010001

Apr 24, 2005 11:44

NOTE: The information contained in this report will be limited to the date each program began using the Department's integrated database, NJEMS. The programs began using the system for this information as follows: Air - 10/1998; Hazardous Waste - 1/2000; Water - 7/2000; TCPA - 12/2001; Land Use 12/2001; DPCC - 1/2002; Solid Waste - 1/2002; Right To Know - 3/2002 and Pesticides - 4/2002. For complete information prior to these dates, please submit an official OPRA request form to the Department. If printing this report, select landscape orientation. For a list of terms and definitions, click on the following link:http://www.state.nj.us/dep/infoview/enforcement.html

Disclaimer: Only final inspection reports are listed in this report. Inspections for which a report has not been finalized by the Department will not appear in this report. Also, inspections which yield violations but where the inspected entity has not yet been notified of the violation are not listed in this report. For inspections indicating Out of Compliance, this means that violations were observed during the inspection, based on facts and information known to the Department at the time of the inspection. Errors or omissions in the factual basis for any violation may result in a future change in classification as a violation when such information becomes known.

Activity Number: SCI 010001 Inspection Type: *Standard Compliance Inspection Program Interest ID: 46808

Inspection Start Date: 11/07/01 End Date: 11/07/01 Lead Investigator: Wright, Helen

Program Interest Name: HUDSON GENERATING STATION

Address: DUFFIELD & VAN KEUREN AVES Jersey City NJ 073060000 County: Hudson

Block: Lot:

Comments:

NJPDES Permit No.: NJ0000647 (DSW) EDP 2/1/90, EXP 1/31/95 for the following surface water discharge numbers: WTPA - Treatment plant outfall to surface water; 361A, 363A, 364A, 365A and 366A, non-contact cooling water outfalls to surface water; 61PA and 61RA - Bottom ash and Fly ash pond outfalls to surface water. 61GA stormwater discharge - has been sealed since 11/18/91.

Fax Number 201-792-9736.

Discharge Monitoring Reports reviewed from September 2000 through August 2001.

Subject Item: B 0 - Industrial Wastewater

Seq. #	Requirement Description	Compliance Status	Compliance Comments	Grace Days	Non Minor Reason	Requirement Source
1	The Permittee shall comply with their existing NJPDES Permit [N.J.A.C. 7:14A- 6.2(a)1]	Out of Compliance, Non-referred	See Monitoring Requirement marked OC below.			DSW 000003

Subject Item: WQSW 0 - Water - Pre-NJEMS Surface Water Permit

Seq. #	Requirement Description	Compliance Status	Compliance Comments	Grace Days	Non Minor Reason	Requirement Source
100	DISCHARGE REQUIREMENTS.	Heading				Rules
120	Were there any discharges of pollutants to the waters of the State not authorized by a valid NJPDES permit?. [N.J.A.C. 7:14A- 2.1(d)]	In Compliance	No.			Rules
130	Was there a discharge of or evidence of foam, objectional color or odor, and/or visable sheen in the receiving stream?.[N.J.A.C. 7:14A-12.6(a)]	In Compliance	No.			Rules
140	Were any and all outfall pipes tagged?.[N.J.A.C. 7:14A- 6.2(a)9]	In Compliance	Yes.			Rules
150	Did the permittee develop a Capacity Assurance Program if its flow reached or exceeded 80% of the committed flow?.[N.J.A.C. 7:14A-22.16(a)]	Not Applicable				Rules
200	MONITORING REQUIREMENTS.	Heading				Rules
210	Was all monitoring conducted in accordance with Part III of the Permit?.[N.J.A.C. 7:14A- 6.5(b)]	Out of Compliance	Failure to conduct monitoring as specified in Part III of the permit. A review of the February 2001 DMR for outfall 363A indicates that flow was reported. The facility failed to sample and report pH and Temperature. Also, failure to sample and report PHC for outfall 061P on the November 2000 DMR.			Rules
220	Was sampling conducted in accordance with the Field Sampling Procedures Manual or other Department approved method?.[N.J.A.C. 7:14A-6.5(b)4]	In Compliance				Rules
230	Were all analyses performed by New Jersey Certified Laboratory? Indicate lab name(s).[N.J.A.C. 7:14A- 6.5(a)2]	In Compliance	PSEG Fossil LLC - Lab ID#09591, Temp., pH and TRO. PSResearch & Testing - Lab ID#07180, PHC, TSS, TOC, Cu, Fe, Ni and Zinc. New England Bioassay - Lab ID#46405, Acute Toxicity.			Rules
240	Were analyses performed in accordance with the appropriate analytical test procedures? .[N.J.A.C. 7:14A- 6.5(a)2]	In Compliance				Rules
270	Were effluent characterization samples listed in PART III - WCR collected in different quarters of the year? .[N.J.A.C. 7:14A- 6.2(a)1]	Not Applicable				Rules
300	REPORTING.	Heading				Rules
310	Did the permittee complete monitoring reports in accordance with the current Discharge Monitoring Report Manual and any updates?.[N.J.A.C. 7:14A-6.2(a)1]	In Compliance				Rules
320	Did the highest ranking official having day-to-day managerial and operational responsibilities for the discharging facility sign the monitoring reports?.[N.J.A.C. 7:14A- 6.9(a)]	In Compliance	Francis X. Sullivan, Manager, Hudson Generating Station, signs the DMRs.			Rules
400	RECORDKEEPING.	Heading				Rules
410	Does the permittee retain monitoring records as required by the permit? .[N.J.A.C. 7:14A- 6.6(a)]	In Compliance				Rules
420	Does the permittee retain copies of all reports required by a NJPDES permit and records of all data used to complete the application for a NJPDES permit for a period of at least 5 years? .[N.J.A.C. 7:14A- 6.6(a)]	In Compliance				Rules

500	OPERATION, MAINTENANCE, AND EMERGENCY CONDITIONS.	Heading				Rules
510	Does the permittee maintain a current O&M Manual which includes an emergency plan?.[N.J.A.C. 7:14A- 6.12(c)&(d)]	In Compliance	Yes.			Rules
520	Does the permittee operate and maintain the treatment works as specified in the O&M Manual?.[N.J.A.C. 7:14A- 6.12(a)]	In Compliance	Yes.			Rules
600	SLUDGE MANAGEMENT.	Heading				Rules
610	Where do the residuals go and what hauler removes them?.[N.J.A.C. 7:14A-20]	In Compliance	Waste Management takes residuals to the HMDC Landfill.			Rules
800	OPERATOR CERTIFICATION.	Heading				Rules
810	Does the facility employ a licensed operator who holds the appropriate classification of license to operate the treatment works?.[N.J.A.C. 7:10A- 1.1]	In Compliance	Tom Scott, Mike Cullen and Natale Cortellessa hold N-2 licenses.			Rules
820	Has the permittee notified the Department's Examination and Licensing Unit of any changes in licensed operator status?.[N.J.A.C. 7:10A- 1.1]	Not Applicable				Rules

contact dep | privacy notice | legal statement

department: njdep home | about dep | index by topic | programs/units | dep online
statewide: nihome | my new jersey | people | business | government | departments | search

Copyright © State of New Jersey, 1996-2003
Department of Environmental Protection
P. O. Box 402
Trenton, NJ 08625-0402

Last Updated: October 15, 2003

Enforcement Actions Issued To HUDSON GENERATING STATION - Program Interest ID: 46808 and Discovery Activity Number: SCI 010001 Program: Water Quality

Apr 24, 2005 11:42

NOTE: The information contained in this report will be limited to the date each program began using the Department's integrated database, NJEMS. The programs began using the system for this information as follows: Air - 10/1998; Hazardous Waste - 1/2000; Water - 7/2000; Right To Know - 11/2000; TCPA - 12/2001; Land Use 12/2001; DPCC - 1/2002; Solid Waste - 1/2002 and Pesticides - 4/2002. For complete information prior to these dates, please submit an official OPRA request form to the Department. If printing this report, select landscape orientation. For a list of terms and definitions, click on the following link:http://www.state.nj.us/dep/infoview/enforcement.html

Disclaimer: All listed enforcement actions address alleged violations based on facts and information known to the Department at the time the violation information was determined. Errors or omissions in the factual basis for any violation may result in a future change in classification as a violation when such information becomes known. Persons cited for violations may contest the Department's enforcement action or penalty assessment. The resultant final decision may uphold, negate or modify the original violation findings or penalty.

Activity Number: NEA 020001

Document Type: Settlement Agreement

Effective Start Date	Current Document Status and Date	Penalty Assessed	Amount Received	Related Activities:
3/17/03	Effective 3/17/03	$11,000.00	$11,000.00	No Related Activities

Description of Non-compliance	Violated Citation	Violation Status	Related Inspection	Related Violations
Failure to conduct monitoring as specified in Part III of the permit. A review of the February 2001 DMR for outfall 363A indicates that flow was reported. The facility failed to sample and report pH and Temperature. Also, failure to sample and report PHC for outfall 061P on the November 2000 DMR.	[N.J.A.C. 7:14A- 6.5(b)]	No Further Action	Inspection	Violations

Activity Number: PEA 010001

Document Type: NOV

Effective Start Date	Current Document Status and Date	Penalty Assessed	Amount Received	Related Activities:
1/10/02	Effective 1/10/02	N/A	N/A	No Related Activities

Description of Non-compliance	Violated Citation	Violation Status	Related Inspection	Related Violations
Failure to conduct monitoring as specified in Part III of the permit. A review of the February 2001 DMR for outfall 363A indicates that flow was reported. The facility failed to sample and report pH and Temperature. Also, failure to sample and report PHC for outfall 061P on the November 2000 DMR.	[N.J.A.C. 7:14A- 6.5(b)]	No Further Action	Inspection	Violations

920980425

Copyright © State of New Jersey, 1996-2003
Department of Environmental Protection
P. O. Box 402
Trenton, NJ 08625-0402

Last Updated: October 15, 2003

njhome | my new jersey | people | business | government | departments
search
new jersey department of environmental protection
OPRA | New Jersey Open Public Records Act
opra home | contact opra | njdep home
data errors | revise search | site search | reports by category | reports search | help

Inspection Summary Report for HUDSON GENERATING STATION - Activity Number SCI 020001

Apr 24, 2005 11:41

NOTE: The information contained in this report will be limited to the date each program began using the Department's integrated database, NJEMS. The programs began using the system for this information as follows: Air - 10/1998; Hazardous Waste - 1/2000; Water - 7/2000; TCPA - 12/2001; Land Use 12/2001; DPCC - 1/2002; Solid Waste - 1/2002; Right To Know - 3/2002 and Pesticides - 4/2002. For complete information prior to these dates, please submit an official OPRA request form to the Department. If printing this report, select landscape orientation. For a list of terms and definitions, click on the following link:http://www.state.nj.us/dep/infoview/enforcement.html

Disclaimer: Only final inspection reports are listed in this report. Inspections for which a report has not been finalized by the Department will not appear in this report. Also, inspections which yield violations but where the inspected entity has not yet been notified of the violation are not listed in this report. For inspections indicating Out of Compliance, this means that violations were observed during the inspection, based on facts and information known to the Department at the time of the inspection. Errors or omissions in the factual basis for any violation may result in a future change in classification as a violation when such information becomes known.

Activity Number: SCI 020001 Inspection Type: *Standard Compliance Inspection Program Interest ID: 46808

Inspection Start Date: 10/02/02 End Date: 10/02/02 Lead Investigator: Wright, Helen

Program Interest Name: HUDSON GENERATING STATION

Address: DUFFIELD & VAN KEUREN AVES Jersey City NJ 073060000 County: Hudson

Block: Lot:

Comments:

NJPDES Permit No. NJ0000647 (DSW) EDP 2/1/90, EXP 1/31/95 for the following surface water discharges: WTPA - Treatment plant outfall to surface water; 361A, 363A, 365A and 366A - non-contact cooling water outfalls to surface water; 61PA - Fly ash pond outfall to surface water; 61RA - no discharge (still listed on permit); 61GA - former stormwater discharge was sealed in 1991 and is no longer on the permit.

NJPDES Permit No. NJ0120324, General Stormwater Permit, EDP 6/1/02, EXP 5/31/07.

Physical Connection Permit No. 0816. Two 10" RPZ backflow devices are tested quarterly by C. Lyle Blevins #10054 of Pan Metro Services, 908-752-1225.

Discharge monitoring reports reviewed from September 2001 through July 2002.

Effluent grab samples for PHC, TOC, TSS, Chloride, Cooper and Iron were taken from the automatic sampler for WTPA at 10:30 am.

Subject Item: 5G2 0 - Basic Industrial Stormwater GP - NJ0088315 (5G2)

Seq. #	Requirement Description	Compliance Status	Compliance Comments	Grace Days	Non Minor Reason	Requirement Source
94	STORMWATER POLLUTION PREVENTION PLAN. [N.J.A.C. 7:14A- 6(2)a1]	Heading				DST 020001
99	Did the permittee prepare an SPPP as required by the permit?. [N.J.A.C. 7:14A- 2(11)c]	In Compliance				DST 020001

102	When did the permittee submit Attachment C to the Department?.	In Compliance	September 8, 1995			DST 020001
104	Has the Attachment D due date changed from the last permit? If so, what is the new due date?. [N.J.A.C. 7:14A- 2(11)c]	Data Collection	The new due date is January to March of every year.			DST 020001
106	Did the permittee amend its SPPP to reflect changes at the facility and/or discharges to ground water?. [N.J.A.C. 7:14A- 2(11)c]	In Compliance				DST 020001
109	Does the SPPP include a categorical list of all source materials located at the facility?. [N.J.A.C. 7:14A-6(2)a1]	In Compliance				DST 020001
114	Does the SPPP include a list of the facility's non-stormwater discharges to surface or ground water?. [N.J.A.C. 7:14A- 6(2)a1]	In Compliance	Surface Water NJPDES Permit No. NJ0000647.			DST 020001
120	Does the SPPP include a map developed as required by the permit?. [N.J.A.C. 7:14A- 6(2)a1]	In Compliance				DST 020001
126	Does the SPPP include a complete narrative description concerning the management of all source materials at the facility as required by the permit?. [N.J.A.C. 7:14A- 6(2)a1]	In Compliance				DST 020001
131	Does the SPPP include best management practices which will ensure no exposure of source materials to stormwater? . [N.J.A.C. 7:14A- 6(2)a1]	In Compliance				DST 020001
137	Does the SPPP include a schedule for full implementation of best management practices by the applicable deadlines specified in the permit?. [N.J.A.C. 7:14A- 6(2)a1]	In Compliance				DST 020001
143	Does the SPPP include a schedule for providing regular and appropriate maintenance and repairs of all structural best management practices?. [N.J.A.C. 7:14A- 6(2)a1]	In Compliance				DST 020001
149	Does the SPPP include a schedule for regular inspection by facility personnel of designated areas, operations, and equipment, inclusive of an annual inspection of the entire facility, as required by the permit? . [N.J.A.C. 7:14A- 6(2)a1]	In Compliance				DST 020001
154	Does the SPPP include reports summarizing each annual inspection of the facility and, if non-compliance is found during an inspection, is the non-compliance reported to the Department?. [N.J.A.C. 7:14A- 6(2)a1]	In Compliance				DST 020001
157	Does the SPPP record any incidents such as leaks or accidental discharges, and any failures or breakdowns of structural BMPs and ensure that, in such instances, corrective measures are implemented and inspected, and full remediation is achieved?. [N.J.A.C. 7:14A-6(2)a1]	In Compliance				DST 020001
162	If the facility is undergoing any construction activities, has the SPPP been amended to reflect such construction as required by the permit? . [N.J.A.C. 7:14A- 6(2)a1]	In Compliance				DST 020001
168	If the facility has a SPCC, DPCC, and/or DCR Plan, does the SPPP include, or cite the location of, said plans?. [N.J.A.C. 7:14A- 6(2)a1]	In Compliance	All the plans are kept together in the same folder.			DST 020001
169	Does the SPPP include a list of any final or draft NJPDES permits, pending NJPDES permit applications, or pending requests for authorization under another general NJPDES permit? . [N.J.A.C. 7:14A- 6(2)a1]	In Compliance				DST 020001
201	RECORDKEEPING.	Heading				DST 020001
205	Did the permittee make the SPPP available for review?. [N.J.A.C. 7:14A- 2(11)c]	In Compliance				DST 020001

208	Does the facility maintain at least 5 years of Attachment D recertifications?. [N.J.A.C. 7:14A- 6.6]	In Compliance				DST 020001
238	OPERATIONS AND MAINTENANCE.	Heading				DST 020001
239	Did the permittee develop an SPPP that demonstrates, once it has been implemented, that there will be no exposure, during and after storm events, of source materials to stormwater as required by the permit? . [N.J.A.C. 7:14A- 2(11)c]	In Compliance				DST 020001

Subject Item: B 0 - **Industrial Wastewater**

Seq. #	Requirement Description	Compliance Status	Compliance Comments	Grace Days	Non Minor Reason	Requirement Source
3	The Permittee shall comply with their existing NJPDES Permit [N.J.A.C. 7:14A- 6.2(a)1]	In Compliance				DSW 000003

Subject Item: GDR 0 - **General Discharge Requirements**

Seq. #	Requirement Description	Compliance Status	Compliance Comments	Grace Days	Non Minor Reason	Requirement Source
1	Immediately comply with the monitoring and reporting requirements of the NJPDES Permit. [N.J.A.C. 7:14A- 2]	In Compliance				PEA 010001

Subject Item: WGSS 0 - **Water - General Stormwater Permit Submittals**

Seq. #	Requirement Description	Compliance Status	Compliance Comments	Grace Days	Non Minor Reason	Requirement Source
40	Did the permittee submit annual Attachment D recertifications as required by the permit?. [N.J.A.C. 7:14A-11 Appendix A.3]	In Compliance				Rules
43	Did the permittee submit Annual Reports along with annual Attachment D recertifications as required by the permit?. [N.J.A.C. 7:14A-11 Appendix A.3]	Out of Compliance, Non-referred	Failure to submit the Annual Reports with Annual Attach D.			Rules

Subject Item: WQSW 0 - **Water - Pre-NJEMS Surface Water Permit**

Seq. #	Requirement Description	Compliance Status	Compliance Comments	Grace Days	Non Minor Reason	Requirement Source
101	DISCHARGE REQUIREMENTS.	Heading				Rules
121	Were there any discharges of pollutants to the waters of the State not authorized by a valid NJPDES permit?. [N.J.A.C. 7:14A- 2.1(d)]	In Compliance	No.			Rules
131	Was there a discharge of or evidence of foam, objectional color or odor, and/or visable sheen in the receiving stream?.[N.J.A.C. 7:14A-12.6(a)]	In Compliance	No.			Rules
141	Were any and all outfall pipes tagged?.[N.J.A.C. 7:14A- 6.2(a)9]	In Compliance				Rules
151	Did the permittee develop a Capacity Assurance Program if its flow reached or exceeded 80% of the committed flow?.[N.J.A.C. 7:14A-22.16(a)]	Not Applicable				Rules
201	MONITORING REQUIREMENTS.	Heading				Rules

920980429

211	Was all monitoring conducted in accordance with Part III of the Permit?.[N.J.A.C. 7:14A- 6.5(b)]	In Compliance				Rules
221	Was sampling conducted in accordance with the Field Sampling Procedures Manual or other Department approved method?.[N.J.A.C. 7:14A- 6.5(b)4]	In Compliance				Rules
231	Were all analyses performed by New Jersey Certified Laboratory? Indicate lab name(s).[N.J.A.C. 7:14A- 6.5(a)2]	In Compliance	Facility Lab. #09591; New England Bioassay, #46405; and Public Service Research & Testing Lab. #07180.			Rules
241	Were analyses performed in accordance with the appropriate analytical test procedures? .[N.J.A.C. 7:14A- 6.5(a)2]	In Compliance				Rules
271	Were effluent characterization samples listed in PART III - WCR collected in different quarters of the year? .[N.J.A.C. 7:14A- 6.2(a)1]	Not Applicable				Rules
301	REPORTING.	Heading				Rules
311	Did the permittee complete monitoring reports in accordance with the current Discharge Monitoring Report Manual and any updates?.[N.J.A.C. 7:14A- 6.2(a)1]	In Compliance				Rules
321	Did the highest ranking official having day-to-day managerial and operational responsibilities for the discharging facility sign the monitoring reports?.[N.J.A.C. 7:14A- 6.9(a)]	In Compliance	DMRs are signed by Francis X. Sullivan.			Rules
401	RECORDKEEPING.	Heading				Rules
411	Does the permittee retain monitoring records as required by the permit? .[N.J.A.C. 7:14A- 6.6(a)]	In Compliance				Rules
421	Does the permittee retain copies of all reports required by a NJPDES permit and records of all data used to complete the application for a NJPDES permit for a period of at least 5 years? .[N.J.A.C. 7:14A- 6.6(a)]	In Compliance				Rules
501	OPERATION, MAINTENANCE, AND EMERGENCY CONDITIONS.	Heading				Rules
511	Does the permittee maintain a current O&M Manual which includes an emergency plan?.[N.J.A.C. 7:14A- 6.12(c)&(d)]	In Compliance				Rules
521	Does the permittee operate and maintain the treatment works as specified in the O&M Manual?.[N.J.A.C. 7:14A- 6.12(a)]	In Compliance				Rules
601	SLUDGE MANAGEMENT.	Heading				Rules
611	Where do the residuals go and what hauler removes them?.[N.J.A.C. 7:14A-20]	In Compliance	Waste Management takes residuals to the NJMC Landfill.			Rules
801	OPERATOR CERTIFICATION.	Heading				Rules
811	Does the facility employ a licensed operator who holds the appropriate classification of license to operate the treatment works?.[N.J.A.C. 7:10A- 1.1]	In Compliance	There are 3 N2 licensed operators: Mike Cullen, Natale Cortellessa and Tom Scott.			Rules
821	Has the permittee notified the Department's Examination and Licensing Unit of any changes in licensed operator status?.[N.J.A.C. 7:10A- 1.1]	Not Applicable				Rules

920980430

Copyright © State of New Jersey, 1996-2003
Department of Environmental Protection
P. O. Box 402
Trenton, NJ 08625-0402

Last Updated: October 15, 2003

920980431

Inspection Summary Report for PSE&G FOSSIL LLC HUDSON GENERATING STATION - Activity Number SCI 030001

Apr 24, 2005 11:34

NOTE: The information contained in this report will be limited to the date each program began using the Department's integrated database, NJEMS. The programs began using the system for this information as follows: Air - 10/1998; Hazardous Waste - 1/2000; Water - 7/2000; TCPA - 12/2001; Land Use 12/2001; DPCC - 1/2002; Solid Waste - 1/2002; Right To Know - 3/2002 and Pesticides - 4/2002. For complete information prior to these dates, please submit an official OPRA request form to the Department. If printing this report, select landscape orientation. For a list of terms and definitions, click on the following link:http://www.state.nj.us/dep/infoview/enforcement.html

Disclaimer: Only final inspection reports are listed in this report. Inspections for which a report has not been finalized by the Department will not appear in this report. Also, inspections which yield violations but where the inspected entity has not yet been notified of the violation are not listed in this report. For inspections indicating Out of Compliance, this means that violations were observed during the inspection, based on facts and information known to the Department at the time of the inspection. Errors or omissions in the factual basis for any violation may result in a future change in classification as a violation when such information becomes known.

Activity Number: SCI 030001 Inspection Type: *Standard Compliance Inspection Program Interest ID: 0816

Inspection Start Date: 08/20/03 End Date: 08/20/03 Lead Investigator: Wright, Helen

Program Interest Name: PSE&G FOSSIL LLC HUDSON GENERATING STATION

Address: DUFFIELD AVE & VAN KEUREN AVE Jersey City NJ 07044 County: Hudson

Block: Lot:

Comments:

NJPDES Permit No.: NJ0000647, Discharge to Surface Water
Permit renewal Effective Date: 8/1/03, Expiration Date: 7/31/08
The facility has the following surface water discharges:
WTPA - Treatment plant outfall; 361A, 363A, 365A and 366A - Non-contact cooling water;
61PA - Fly ash pond; 61RA - no discharge (but still listed on the permit).

NJPDES Permit No.: NJ0120324, General Stormwater; EDP 6/1/02, EXP 5/31/07.

Physical Connection Permit No. 0816 is for two 10" RPZ backflow devices. They are tested quarterly by C. Lyle Blevins, (certification # 10054) of Pan Metro Services.

Discharge Monitoring Reports were reviewed for the period of August 2002 through July 2003, which preceeds the requirements of the renewal permit which became effective August 1, 2003.

Subject Item: B 0 - Industrial Wastewater

Seq. #	Requirement Description	Compliance Status	Compliance Comments	Grace Days	Non Minor Reason	Requirement Source
8	Flow shall be measured using a flow meter for outfalls DSNWTPA, DSN61PA, and DSN61SA. [N.J.A.C. 7:14A- 6.2(a)1]	In Compliance	Outfalls WTPA and 61PA have flow meters. Outfall DSN61SA is a new outfall to the discharge canal which may be utilized to discharge reject water from a			DSW 000002

			reverse osmosis system. The reverse osmosis system has not been installed to date.			
14	Batch sampling for total copper, total iron, total recoverable nickel and total recoverable zinc shall be taken during the discharge of chemical/metal cleaning wastewater.	In Compliance				DSW 000002
28	Standard Submittal Requirements	Sub-Heading				DSW 000002
46	Submit an acute whole effluent toxicity test report: within twenty-five days after the end of every 12 month monitoring period beginning from the effective date of the permit (EDP). The permittee shall submit toxicity test results on appropriate forms. [N.J.A.C. 7:14A-13.6(a)]	In Compliance				DSW 000002
56	DISCHARGE REQUIREMENTS.	Sub-Heading				DSW 000002
65	Did the permittee discharge only at the authorized location(s)?. [N.J.A.C. 7:14A-13.16(a)1]	In Compliance				DSW 000002
70	Was there a discharge of or evidence of foam, objectional color or odor, and/or visable sheen in the receiving stream?. [N.J.A.C. 7:14A-12.6(a)]	In Compliance	No.			DSW 000002
71	MONITORING REQUIREMENTS	Heading				DSW 000002
72	Was all monitoring conducted in accordance with Part III of the Permit?. [N.J.A.C. 7:14A- 6.5(b)]	In Compliance				DSW 000002
73	Was sampling conducted in accordance with the Field Sampling Procedures Manual or other Department approved method?. [N.J.A.C. 7:14A- 6.5(b)4]	In Compliance				DSW 000002
74	Were all analyses performed by a New Jersey Certified Laboratory? Indicate lab name(s). [N.J.A.C. 7:14A-6.5(a)2]	In Compliance	Facility Lab, Maplewood Testing Lab (MTS), and New England Bio Assay.			DSW 000002
75	Were analyses of wastewater performed in accordance with the appropriate analytical test procedures? . [N.J.A.C. 7:14A- 6.5(a)2]	In Compliance				DSW 000002
76	Were analyses of residuals performed in accordance with the appropriate analytical test procedures? . [N.J.A.C. 7:14A-19.3(c)7]	In Compliance				DSW 000002
77	Was annual and semi-annual wastewater testing conducted in different quarters during the permit cycle?. [N.J.A.C. 7:14A- 6.2(a)1]	Not Applicable	Testing is performed monthly.			DSW 000002
79	REPORTING	Heading				DSW 000002
80	Did the permittee conduct toxicity tests on its wastewater discharge in accordance with the provisions in the permit? . [N.J.A.C. 7:14A-13.6(a)]	In Compliance				DSW 000002
81	Did the permittee repeat any test that does not meet the specifications of N.J.A.C. 7:18, laboratory certification regulations, within 30 days of the completion of the initial test? . [N.J.A.C. 7:14A-13.6(a)]	Not Applicable				DSW 000002
82	Did the permittee complete monitoring reports in accordance with the current Discharge Monitoring Report Manual and any updates?. [N.J.A.C. 7:14A-6.2(a)1]	In Compliance				DSW 000002
83	Did the permittee collect and analyze the concentration of ammonia-N in the effluent on the day a sample is collected for WET testing. [N.J.A.C. 7:14A-13.6(a)]	In Compliance				DSW 000002
84	Did the highest ranking official having day-to-day managerial and operational responsibilities for the discharging facility sign the monitoring reports?. [N.J.A.C. 7:14A- 6.9(a)]	In Compliance				DSW 000002

85	Did the permittee resubmit an Acute Methodology Questionnaire within 60 days of any change in laboratory?. [N.J.A.C. 7:14A-13.6(a)]	Not Applicable	There has been no change of laboratory.			DSW 000002
86	RECORDKEEPING	Heading				DSW 000002
87	Does the permittee appropriately retain monitoring records? . [N.J.A.C. 7:14A- 6.6(a)]	In Compliance				DSW 000002
88	Does the permittee retain copies of all reports required by a NJPDES permit and records of all data used to complete the application for a NJPDES permit for a period of at least 5 years? . [N.J.A.C. 7:14A- 6.6(a)]	In Compliance				DSW 000002
89	OPERATION, MAINTENANCE, AND EMERGENCY CONDITIONS.	Sub-Heading				DSW 000002
90	Does the permittee maintain a current O&M Manual which includes an emergency plan?. [N.J.A.C. 7:14A-6.12(c)&(d)]	In Compliance				DSW 000002
91	Does the permittee operate and maintain the treatment works as specified in the O&M Manual?. [N.J.A.C. 7:14A- 6.12(a)]	In Compliance				DSW 000002

Subject Item: **GDR** **0 - General Discharge Requirements**

Seq. #	Requirement Description	Compliance Status	Compliance Comments	Grace Days	Non Minor Reason	Requirement Source
1	Immediately comply with the monitoring and reporting requirements of the NJPDES Permit. [N.J.A.C. 7:14A-2]	In Compliance				PEA 010001
2	Immediately comply with your NJPDES Permit by sampling and reporting as required. [N.J.A.C. 7:14A-14]	In Compliance				NEA 020001
16	Are all violations reported to the Department as required in N.J.A.C. 7:14A-6.10?. [N.J.A.C. 7:14A-6.10]	In Compliance				DSW 000002
27	Is the permittee in compliance with land-based sludge management criteria and the requirements for the management of residuals and grit and screenings?. [N.J.A.C. 7:14A- 6.15(a)]	In Compliance				DSW 000002
41	Does the permittee have any discharges not authorized by a valid permit?. [N.J.A.C. 7:14A- 6.2(a)1]	In Compliance	No.			DSW 000002
42	OPERATOR CERTIFICATION.	Sub-Heading				DSW 000002
43	Does the facility employ a licensed operator who holds the appropriate classification of license to operate the treatment works?. [N.J.A.C. 7:10A- 1.1]	In Compliance				DSW 000002
44	Has the permittee notified the Department's Examination and Licensing Unit of any changes in licensed operator status?. [N.J.A.C. 7:10A- 1.1]	In Compliance	The Department has been notified that Mike Cullen is the current N - 2 operator.			DSW 000002

Subject Item: **WCP1** **0 - Water - Comply with Permit**

Seq. #	Requirement Description	Compliance Status	Compliance Comments	Grace Days	Non Minor Reason	Requirement Source
20	Did the permittee comply with the conditions of the NJPDES permit?.[N.J.A.C. 7:14A- 6.2(a)1]	Out of Compliance, Non-referred	A review of the 12/02 DMR for discharge 361A indicated that the pH effluent limit of 6.5 was violated, with a reported value of 6.1. A review of the 3/03 DMR for discharge 361A indicated that the BTUs effluent limit of 4360 was violated, with a reported BTUs of 4450.			Rules

Subject Item: WQSW 0 - Water - Pre-NJEMS Surface Water Permit

Seq-#	Requirement Description	Compliance Status	Compliance Comments	Grace Days	Non Minor Reason	Requirement Source
102	DISCHARGE REQUIREMENTS.	Heading				Rules
142	Were any and all outfall pipes tagged?.[N.J.A.C. 7:14A- 6.2(a)9]	In Compliance				Rules
152	Did the permittee develop a Capacity Assurance Program if its flow reached or exceeded 80% of the committed flow?.[N.J.A.C. 7:14A-22.16(a)]	Not Applicable				Rules
602	SLUDGE MANAGEMENT.	Heading				Rules
612	Where do the residuals go and what hauler removes them?.[N.J.A.C. 7:14A-20]	In Compliance	Waste Management takes residuals to the HMDC Landfill.			Rules

contact dep | privacy notice | legal statement

department: njdep home | about dep | index by topic | programs/units | dep online
statewide: njhome | my new jersey | people | business | government | departments | search

Copyright © State of New Jersey, 1996-2003
Department of Environmental Protection
P. O. Box 402
Trenton, NJ 08625-0402

Last Updated: October 15, 2003

Inspection Summary Report for PSE&G FOSSIL LLC HUDSON GENERATING STATION - Activity Number SCI 040001

Apr 24, 2005 11:36

NOTE: The information contained in this report will be limited to the date each program began using the Department's integrated database, NJEMS. The programs began using the system for this information as follows: Air - 10/1998; Hazardous Waste - 1/2000; Water - 7/2000; TCPA - 12/2001; Land Use 12/2001; DPCC - 1/2002; Solid Waste - 1/2002; Right To Know - 3/2002 and Pesticides - 4/2002. For complete information prior to these dates, please submit an official OPRA request form to the Department. If printing this report, select landscape orientation. For a list of terms and definitions, click on the following link:http://www.state.nj.us/dep/infoview/enforcement.html

Disclaimer: Only final inspection reports are listed in this report. Inspections for which a report has not been finalized by the Department will not appear in this report. Also, inspections which yield violations but where the inspected entity has not yet been notified of the violation are not listed in this report. For inspections indicating Out of Compliance, this means that violations were observed during the inspection, based on facts and information known to the Department at the time of the inspection. Errors or omissions in the factual basis for any violation may result in a future change in classification as a violation when such information becomes known.

Activity Number: SCI 040001 Inspection Type: *Standard Compliance Inspection Program Interest ID: 0816

Inspection Start Date: 07/01/04 End Date: 07/01/04 Lead Investigator: Wright, Helen

Program Interest Name: PSE&G FOSSIL LLC HUDSON GENERATING STATION

Address: DUFFIELD AVE & VAN KEUREN AVE Jersey City NJ 07044 County: Hudson

Block: Lot:

Comments:

NJPDES Permit No. NJ0000647 DSW, Effective Date 8/1/03, Expires 7/31/08.

Discharge Outfalls: 361 - NCCW; 363 - Gas Turbine NCCW; 364 - NCCW; 365 - NCCW; 366 - NCCW; 61PA - Fly Ash Pond; 61SA - Reverse osmosis reject water; WTPA - Treated wastewater.

NJPDES Permit No. NJ0120324 General Stormwater Permit.

Physical Connection Permit No. 0816.

Discharge Monitoring Reports were reviewed for the period of January 2004 through May 2004. There were no violations.

Notification of Rotamine Dye Test to be conducted for DSN 361A during the week of July 12, 2004.

Subject Item: B 0 - Industrial Wastewater

Seq. #	Requirement Description	Compliance Status	Compliance Comments	Grace Days	Non Minor Reason	Requirement Source
8	Flow shall be measured using a flow meter for outfalls DSNWTPA, DSN61PA, and DSN61SA. [N.J.A.C. 7:14A- 6.2(a)1]	In Compliance				DSW 000002

10	Chlorine Produced Oxidants (CPOs) may not be discharged from any single generating unit for more than two hours per day unless the permittee demonstrates to the permitting authority that discharge for more than two hours is required for macroinvertebrate control. Simultaneous multi-unit chlorination is permitted. Sampling for CPO shall take place during chlorination.	In Compliance	Discharges are computer timed for compliance.			DSW 000002
11	For outfalls DSN361A, DSN363A, DSN364A, DSN365A, and DSN366A: when influent pH is less than 6.5, the effluent minimum limit shall be the influent pH; when the influent pH is greater than 8.5, the effluent maximum limit shall be the influent pH. [N.J.A.C. 7:14A- 6.2(a)1]	Data Collection				DSW 000002
14	Batch sampling for total copper, total iron, total recoverable nickel and total recoverable zinc shall be taken during the discharge of chemical/metal cleaning wastewater.	In Compliance				DSW 000002
33	Section 316(b) Report Submittal Requirements	Sub-Heading				DSW 000002
34	The permittee shall install modified ristoph screens with coarse mesh. The new screens will be equipped with a spray wash system and fish return system. In addition, the permittee shall modify the existing curtain wall to reduce intake velocities. These intake modifications shall be completed within two years of the effective date of the permit on a single unit. The same intake modifications shall be completed on the second unit within 3.5 years of the effective date of the permit to allow a side by side comparison of the old and modified intake designs during the interim period between completion of the first and second unit modifications.	In Compliance	See Adjudicatory Hearing Documents.			DSW 000002
35	Submit a Thermal 316 Study Workplan: within 18 months from the effective date of this document. The workplan shall involve demonstrating compliance with 316(b) of the Clean Water Act.	In Compliance				DSW 000002
36	Permittee shall implement the NJDEP approved study plan after the installation and operation of the modified intake structure on the first unit.	In Compliance				DSW 000002
41	The permittee is authorized to chlorinate their cooling water in accordance with A. above. The permittee is also authorized to use the following biocides for the treatment of non-contact cooling water: sodium hypochlorite and 1 Bromo 3 Chloro 55 Dimethyl Hydantion. [N.J.A.C. 7:14A- 6.7]	Data Collection				DSW 000002
46	Submit an acute whole effluent toxicity test report: within twenty-five days after the end of every 12 month monitoring period beginning from the effective date of the permit (EDP). The permittee shall submit toxicity test results on appropriate forms. [N.J.A.C. 7 14A-13 6(a)]	In Compliance				DSW 000002
56	DISCHARGE REQUIREMENTS.	Sub-Heading				DSW 000002
65	Did the permittee discharge only at the authorized location(s)? [N.J.A.C. 7:14A-13.16(a)1]	In Compliance				DSW 000002
69	The permittee is required to notify the Department of any changes to its discharges, including any additional heat or temperature loadings, that may occur as a result of changes to the Station's operations. This notification shall be made in writing so that the Department can make a determination as to whether any Section 316(a) variance granted by the Department is still appropriate. The Department reserves the right to request additional thermal modeling data and/or a modified biothermal assessment. [N.J.A.C. 7:14A-16.4]	Data Collection				DSW 000002

70	Was there a discharge of or evidence of foam, objectional color or odor, and/or visable sheen in the receiving stream?. [N.J.A.C. 7:14A-12.6(a)]	In Compliance	No.			DSW 000002
71	MONITORING REQUIREMENTS	Heading				DSW 000002
72	Was all monitoring conducted in accordance with Part III of the Permit?. [N.J.A.C. 7:14A- 6.5(b)]	In Compliance				DSW 000002
73	Was sampling conducted in accordance with the Field Sampling Procedures Manual or other Department approved method?. [N.J.A.C. 7:14A- 6.5(b)4]	In Compliance				DSW 000002
74	Were all analyses performed by a New Jersey Certified Laboratory? Indicate lab name(s). [N.J.A.C. 7:14A-6.5(a)2]	In Compliance	PSEG Lab. 09591 MTS Lab. Maplewood, 07180 New England Bioassay 46405			DSW 000002
75	Were analyses of wastewater performed in accordance with the appropriate analytical test procedures? . [N.J.A.C. 7:14A- 6.5(a)2]	In Compliance				DSW 000002
76	Were analyses of residuals performed in accordance with the appropriate analytical test procedures? . [N.J.A.C. 7:14A-19.3(c)7]	In Compliance				DSW 000002
77	Was annual and semi-annual wastewater testing conducted in different quarters during the permit cycle?. [N.J.A.C. 7:14A- 6.2(a)1]	In Compliance				DSW 000002
78	ACUTE WHOLE EFFLUENT TOXICITY TESTING.	Sub-Heading				DSW 000002
79	REPORTING	Heading				DSW 000002
80	Did the permittee conduct toxicity tests on its wastewater discharge in accordance with the provisions in the permit? . [N.J.A.C. 7:14A-13.6(a)]	In Compliance				DSW 000002
81	Did the permittee repeat any test that does not meet the specifications of N.J.A.C. 7:18, laboratory certification regulations, within 30 days of the completion of the initial test? . [N.J.A.C. 7:14A-13.6(a)]	Not Applicable	Will be done if applicable.			DSW 000002
82	Did the permittee complete monitoring reports in accordance with the current Discharge Monitoring Report Manual and any updates?. [N.J.A.C. 7:14A-6.2(a)1]	In Compliance				DSW 000002
83	Did the permittee collect and analyze the concentration of ammonia-N in the effluent on the day a sample is collected for WET testing. [N.J.A.C. 7:14A-13.6(a)]	In Compliance				DSW 000002
84	Did the highest ranking official having day-to-day managerial and operational responsibilities for the discharging facility sign the monitoring reports?. [N.J.A.C. 7:14A- 6.9(a)]	In Compliance	Francis X. Sullivan.			DSW 000002
85	Did the permittee resubmit an Acute Methodology Questionnaire within 60 days of any change in laboratory?. [N.J.A.C. 7:14A-13.6(a)]	Not Applicable				DSW 000002
86	RECORDKEEPING	Heading				DSW 000002
87	Does the permittee appropriately retain monitoring records? . [N.J.A.C. 7:14A- 6.6(a)]	In Compliance				DSW 000002
88	Does the permittee retain copies of all reports required by a NJPDES permit and records of all data used to complete the application for a NJPDES permit for a period of at least 5 years? . [N.J.A.C. 7:14A- 6.6(a)]	In Compliance				DSW 000002
89	OPERATION, MAINTENANCE, AND EMERGENCY CONDITIONS.	Sub-Heading				DSW 000002

90	Does the permittee maintain a current O&M Manual which includes an emergency plan?. [N.J.A.C. 7:14A-6.12(c)&(d)]	In Compliance				DSW 000002
91	Does the permittee operate and maintain the treatment works as specified in the O&M Manual?. [N.J.A.C. 7:14A- 6.12(a)]	In Compliance				DSW 000002
92	TOXICITY REDUCTION IMPLEMENTATION REQUIREMENTS.	Sub-Heading				DSW 000002

Subject Item: GDR 0 - **General Discharge Requirements**

Seq. #	Requirement Description	Compliance Status	Compliance Comments	Grace Days	Non Minor Reason	Requirement Source
1	Immediately comply with the monitoring and reporting requirements of the NJPDES Permit. [N.J.A.C. 7:14A-2]	In Compliance				PEA 010001
2	Immediately comply with your NJPDES Permit by sampling and reporting as required. [N.J.A.C. 7:14A-14]	In Compliance				NEA 020001
16	Are all violations reported to the Department as required in N.J.A.C. 7:14A-6.10?. [N.J.A.C. 7:14A-6.10]	In Compliance				DSW 000002
27	Is the permittee in compliance with land-based sludge management criteria and the requirements for the management of residuals and grit and screenings?. [N.J.A.C. 7:14A- 6.15(a)]	In Compliance				DSW 000002
41	Does the permittee have any discharges not authorized by a valid permit?. [N.J.A.C. 7:14A- 6.2(a)1]	In Compliance	No.			DSW 000002
42	OPERATOR CERTIFICATION.	Sub-Heading				DSW 000002
43	Does the facility employ a licensed operator who holds the appropriate classification of license to operate the treatment works?. [N.J.A.C. 7:10A- 1.1]	In Compliance	Michael Cullen is the N-2 Licensed Operator, also Vince Minetti and Mike Schwartz.			DSW 000002
44	Has the permittee notified the Department's Examination and Licensing Unit of any changes in licensed operator status?. [N.J.A.C. 7:10A- 1.1]	Not Applicable				DSW 000002

Subject Item: WLOP 0 - **Water - Licensed Operator Requirements**

Seq. #	Requirement Description	Compliance Status	Compliance Comments	Grace Days	Non Minor Reason	Requirement Source
102	LICENSED OPERATOR.	Heading				Rules
107	Does the owner of a system employ a licensed operator holding the license prescribed by the Department for that classification of system?. [N.J.A.C. 7:10A-1.10(a)]	In Compliance				Rules
112	Does the licensed operator have readily available written detailed operations and maintenance (O&M) procedures as required by the rules?. [N.J.A.C. 7:10A-1.12(a)1]	In Compliance				Rules
117	Does the licensed operator properly operate and maintain the system?. [N.J.A.C. 7:10A- 1.12(a)2i]	In Compliance				Rules
122	Does the licensed operator schedule routine inspections and preventative maintenance tasks which will be undertaken to preserve the physical integrity of the system?. [N.J.A.C. 7:10A- 1.12(a)2ii]	In Compliance				Rules

127	Did the licensed operator establish and implement a routine recordkeeping system designed to incorporate all O&M procedures that relate to the system?. [N.J.A.C. 7:10A- 1.12(a)2iii]	In Compliance				Rules
132	Did the licensed operator develop a protocol for the system designed to ensure that each employee associated with the system is acquainted with his or her particular responsibilities and obligations, including the protocol to be followed in the event of an emergency?. [N.J.A.C. 7:10A- 1.12(a)2iv]	In Compliance				Rules
142	Did the licensed operator ensure that health and safety measures related to the O&M procedures are followed by the licensee, employee and agents of the system so as to protect human health, safety, welfare and the environment? . [N.J.A.C. 7:10A- 1.12(a)2v]	In Compliance				Rules
147	Did the licensed operator conduct inspections of the system(s) and appurtenances in accordance with the schedule specified in the O&M procedures, and as otherwise indicated by operating requirements, and/or directed by the Department?. [N.J.A.C. 7:10A- 1.12(a)3]	Heading	IC-Daily and Monthly inspections are conducted.			Rules
152	Did the inspections ensure that the system is operated and maintained properly and complies with all, laws, rules, regulations, license conditions and orders relating to this chapter?. [N.J.A.C. 7:10A- 1.12(a)3i]	In Compliance				Rules
157	Were the results of all mechanical equipment and appurtenance inspections essential to the proper O&M of the system either recorded in ink and maintained in bound inspection log books or maintained in secure-access computer databases or files or other equivalent method of recordkeeping? . [N.J.A.C. 7:10A- 1.12(a)3ii]	In Compliance				Rules
162	Is the licensed operator familiar with and did he or she ensure compliance with all laws, rules, regulations, license conditions and orders relating to this chapter?. [N.J.A.C. 7:10A- 1.12(a)4]	In Compliance				Rules
167	Were system records, current permits, written O&M procedures, log books, computer databases or files or other equivalent records, pertinent documents and correspondence made available upon request by the Department or other controlling agency, and kept in a safe and secure area for a period of five years?. [N.J.A.C. 7:10A- 1.12(a)5]	In Compliance				Rules
172	Did the licensed operator immediately report any system deficiencies, breaks, breakdowns, problems, bypasses, pump failures, occurrences, emergencies, complaints and/or intervening factors within the system that result in or necessitate deviation from the routine O&M procedures and any situations that have the potential to affect public health, safety, welfare, or the environment or have the potential to violate any permits, regulations, or laws relating to this chapter, as required by the regulations.. [N.J.A.C. 7:10A- 1.12(b)	In Compliance	Rotamine dye tests are reported in advance.			Rules

Subject Item: WQSW 0 - **Water - Pre-NJEMS Surface Water Permit**

Seq. #	Requirement Description	Compliance Status	Compliance Comments	Grace Days	Non Minor Reason	Requirement Source
102	DISCHARGE REQUIREMENTS.	Heading				Rules
142	Were any and all outfall pipes tagged?.[N.J.A.C. 7:14A- 6.2(a)9]	In Compliance	Outfall tags have been replaced with new ones.			Rules
152	Did the permittee develop a Capacity Assurance Program if its flow reached or exceeded 80% of the committed flow?.[N.J.A.C. 7:14A-22.16(a)]	Not Applicable				Rules
302	REPORTING.	Heading				Rules

312	Did the permittee complete monitoring reports in accordance with the current Discharge Monitoring Report Manual and any updates?.[N.J.A.C. 7:14A-6.2(a)1]	In Compliance				Rules
602	SLUDGE MANAGEMENT.	Heading				Rules
612	Where do the residuals go and what hauler removes them?.[N.J.A.C. 7:14A-20]	In Compliance	Residuals are taken to the New Jersey Meadowlands Facility by Waste Management.			Rules

Subject Item: WSPC 265 - **Physical Connection Valve SI**

Seq. #	Requirement Description	Compliance Status	Compliance Comments	Grace Days	Non Minor Reason	Requirement Source
5	For this permit to remain valid, each physical connection installation backflow prevention valve listed on this permit shall be dismantled and internally inspected annually within six months prior to the submission of an application for permit renewal pursuant to N.J.A.C. 7:10-10.5(b). After reassembly, the owner of the facility shall have the backflow prevention device tested for tightness to ensure integrity of the device. An internal inspection shall consist of the dismantling of a double check valve assembly or reduced pressure zone backflow preventer assembly to visually inspect the integrity of the internal mechanism including the clappers, discs, springs and facing rings pursuant to N.J.A.C. 7:10-10.6(a)2. [N.J.A.C. 7:10-10.10(6)a2]	In Compliance	Lyle Blevins of Pan Metro tested the device on 4/16/03, 7/16/03, 10/30/03 and 2/12/04.			WPC 040001
5	For this permit to remain valid, each physical connection installation backflow prevention valve listed on this permit shall be inspected and tested for tightness under prevailing pressure conditions at least once every three months pursuant to N.J.A.C. 7:10-10.6(a)1. [N.J.A.C. 7:10-10.10(6)a1]	In Compliance				WPC 040001
5	For this permit to remain valid, the inspections and testing required pursuant to N.J.A.C. 7:10-10.6(a) shall be conducted by an authorized representative of the owner of the facility where the backflow prevention device is installed in the presence of an authorized representative of the administrative authority and/or the supplier of water, or by a certified tester who holds a valid backflow prevention device testers certificate issued by a certifying agency approved by the Department pursuant to N.J.A.C. 7:10-10.8. [N.J.A.C. 7:10-10.10(6)a2]	In Compliance				WPC 040001
5	No modification to an approved physical connection installation listed in N.J.A.C. 7:10-10.7(b) shall be made prior to submitting a written request to the Department. [N.J.A.C. 7:10-10.10(7)b]	Not Applicable				WPC 040001

contact dep | privacy notice | legal statement

department: njdep home | about dep | index by topic | programs/units | dep online
statewide: njhome | my new jersey | people | business | government | departments | search

Copyright © State of New Jersey, 1996-2003
Department of Environmental Protection
P. O. Box 402
Trenton, NJ 08625-0402

Last Updated: October 15, 2003

920980442

RECEIVED
NOV 06 1978
DEPT. ENVIRONMENTAL PROTECTION
NEWARK OFFICE

Spill File

Scott McCone & Scott A. Santora

October 20, 1978

OHMP
CASE #
78-10-17-2

Public Service Electric & Gas Company
Hudson Generating Station
Duffield Avenue
Jersey City, NJ 07206

PURPOSE OF VISIT: Source evaluation in response to a complaint concerning a possible waste chemical discharge site.

VISIT DATE: 10/17/78 1425 to 1555 hours

REPORT DATE: 10/19/78

PERSONS CONTACTED: (PHONE)

(A) Byron Sullivan - Bureau of Air Pollution Control
(B) Jeff Hoffman - Hackensack-Passaic Basin

I. Initial Spill Report: On 10/17/78 at 1145 hours, this office was contacted by John Bolan of the Hackensack Meadowlands Commission (201) 935-3250 concerning the possibility of chemical dumping in the Penhorn Creek. He stated that there was the presence of large amounts of solvent smelling material on the ground and in the near-by Penhorn Creek. The spill area in question is located near the railroad access road which can be reached by going into the main entrance of the "Mall Landfill" located just off of New County Road in Secaucus, N.J.

II. Observation: At 1425 hours, the above-mentioned inspectors arrived at the Mall Landfill and began to conduct a source evaluation of the roadways and lands adjacent to the "Mall Landfill". The main entrance driveway to the landfill as well as the railroad access road, appeared to be covered with an oily-solvent smelling material which apparently was used for dust control. This dust stabalizing material did not appear to present any ground water or run off problem, and the solvent-like odor was limited to within 50 feet of the road. The near-by Penhorn Creek was inspected, and it was observed that the stream appeared to have an unusual greyish-brown color and there was a superfluous amount of dense white froth that floated on top of the water. A water sample was taken from the creek.

Further inspection of the adjacent meadow area revealed that on the side facing the Public Service Electric & Gas Company's security fence was an 18" diameter above ground pipe that was discharging approximately 200-250 gallons/minute of a greyish-brown liquid onto the meadow in an area of approximately four acres. Close inspection of the settled material showed that this material resembled flyash from a quench pit on a coal fired boiler. After taking photographs of all pertinent areas, these inspectors left the Mall's Landfill area at 1555 hours.

920980443

III. Comments: Mr. Byron Sullivan from the Bureau of Air Pollution Control was contacted by this office and he stated that the #1 boiler at the Hudson Generating Station is the only coal fired utility boiler in North Jersey.

Mr. Jeff Hoffman, Hackensack-Passaic Basin, was contacted by this office and he was made aware of the continuous slurried flyash discharge that eventually finds its way into the Penhorn Creek.

IV: Conclusion: The alleged chemical dumping into the Penhorn Creek was found to be the continuous discharging of slurried flyash which had originated from the PSE & G Company's Hudson Generating Station.

Mr. John Bolan was later contacted by phone and he was made aware of these inspectors' findings.

V. Recommendations: It is recommended that no action be taken by this office and a copy of this report should be sent to Mr. Jeff Hoffman, Hackensack-Passaic Basin and to the Solid Waste Administration for possible violations of their codes.

flyash discharge is NJ0000 647
DIS 362

PSE+G HUDSON GENERATING STATION

SM:SAS:db REFER TO COMPLAINT #322

11/16/78

920980444

State of New Jersey
Department of Environmental Protection
Division of Water Resources
1474 Prospect St., CN-029
Trenton, New Jersey 08625

FACT SHEET
FOR DRAFT NJPDES PERMIT TO DISCHARGE INTO THE WATERS OF THE STATE OF NEW JERSEY

No. NJPDES | Application No. NJ0000647 | Date:

Name and Address of Applicant: Public Service Electric and Gas Company
80 Park Place
Newark, New Jersey 07101

Name and Address of Facility Where Discharge Occurs: Public Service Electric and Gas Company
Hudson Generating Station
Duffield and Van Keuren Avenues
Jersey City, Hudson County, New Jersey

Receiving Water: Hackensack River

Classification: TW-3

I. LOCATION OF DISCHARGE

The above named applicant has applied for a New Jersey Pollutant Discharge Elimination System (NJPDES) permit, to the State of New Jersey Department of Environmental Protection, Division of Water Resources to discharge into the designated receiving water.

A description and/or sketch of the location of the discharge is appended as Attachment 1.

II. DESCRIPTION OF FACILITY

The subject facility is an electric power generating station which is defined as a major discharger by USEPA.

Five existing discharges enter the Hackensack River via the main discharge canal. Discharge 361 (892.8 MGD) is once-through noncontact cooling water which receives no treatment. The wastewater treatment plant discharge consists of low volume wastes (0.26 MGD) and chemical metal cleaning wastes (0.8 MGD) which undergo oil separation, pH adjustment, polymer addition and sedimentation prior to discharge. Discharge 361P(2.3 MGD) consists of fly ash transport water which flows to two ash ponds in parallel before discharging. Discharge 362 (5.2 MGD) consists of bottom ash transport water which flows to an ash pond before discharging. Discharge 361G(0.38 MGD) consists of untreated stormwater runoff and equipment drains.

BJB000092

920980446

Six existing discharges flow directly to the Hackensack River. Discharge 363(9.96 MGD) is untreated once-through noncontact cooling water from gas turbines used during peak loading periods. Discharge 364 (0.01 MGD) contains miscellaneous noncontact cooling water which receives no treatment. Discharges 365 (9.33 MGD) and 366 (0.54 MGD) are untreated auxiliary noncontact cooling water. Discharge 367 (0.18 MGD) is untreated boiler cooling water. Discharge 369 (0.02 MGD) is untreated cooling water and ground water infiltration.

Two discharges enter the Hackensack River via a second discharge canal. Discharge 368 (0.28 MGD) is untreated miscellaneous noncontact cooling water. Discharge 370 (150 GPD) consists of untreated boiler blowdown.

III. DESCRIPTION OF DRAFT PERMIT CONDITIONS

The effluent limitations, monitoring requirements, schedules of compliance and other conditions of the draft permit are described in Attachment II. Also included in Attachment II is a brief summary of the basis for each effluent limitation and other conditions in the draft permit.

IV. VARIANCE OR MODIFICATION (if applicable)

N/A

V. PROCEDURES FOR REACHING A FINAL DECISION ON THE DRAFT PERMIT

These procedures are set forth in N.J.A.C. 7:14A-7.1 et seq. Included in the public notice are requirements for the submission of comments by a specified date, procedures for requesting a hearing and the nature of the hearing, and other procedures for participation in the final agency decision.

VI. NJDEP CONTACT

Additional information concerning the draft Permit may be obtained between the hours of 8:00 A.M. and 4:30 P.M., Monday through Friday from: Carol Miller at (609) 292-0407.

920980447

PSEG Fossil LLC
Hudson Generating Station
Duffield & Van Keuren Avenues
Jersey City, NJ 07306

N.J.D.E.P.
COMPLIANCE & ENFORCEMENT
NORTHERN FIELD OFFICE
2005 MAR 31 P 2:00

RECEIVED
FEB 28 2005

PSEG
Fossil LLC

February 24, 2005

CERTIFIED MAIL/RETURN RECEIPT No. 7003 2260 9690 1393

Administrator of Water Compliance and Enforcement
New Jersey Department of Environmental Protection
401 East State Street, 4th Floor East
P.O. Box 422
Trenton, New Jersey 08625-0422

Re: NJPDES 5-Day Written Report (Upset)
Case No. 05-02-16-1334-46
NJPDES PERMIT No. NJ 0000647
Corrected report

Dear Sir or Madam:

On February 18, 2005, PSEG Fossil LLC ("PSEG Fossil") submitted a written report to the New Jersey Department of Environmental Protection ("NJDEP" or "Department"), in accordance with the reporting requirements of N.J.A.C. 7:14A-6.10(e), for the above-referenced incident at the company's Hudson Generating Station ("Hudson" or "the Station"). Hudson is located at Duffield and Van Keuren Avenues in Jersey City, New Jersey. We are re-submitting this report in order to correct typographical errors within the February 18th report.

As stated more fully within this report, this incident involves the release of water from a leak at Hudson's Wastewater Treatment Plant (WTP), causing the release of approximately 1000 gallons of partially processed wastewater to the surrounding soil and Hackensack River. Please note that the initial estimates provided to NJDEP Hotline were approximately 200 gallons. The release was quickly isolated and secured. As stated below, PSEG Fossil has performed tests of the water released to the Hackensack River and, based upon preliminary results, any constituents in the water appear to be below the effluent limitations of PSEG Fossil's NJPDES permit. PSEG Fossil is awaiting the final testing results from the laboratory. While we do not anticipate the final results to change this conclusion, if the final results demonstrate that there is an exceedance of an effluent limitation, PSEG Fossil believes that the incident falls within the definition of an upset and, accordingly, is entitled to an affirmative defense.

1. DESCRIPTION OF INCIDENT

Although the exact time of the incident is unknown, the incident is believed to have begun in the late morning or early afternoon on or about February 16, 2005. The incident was discovered at approximately 1320 hours and secured shortly thereafter. Based on the line dimensions/capacities, an estimated 1000 gallons of wastewater may have been released to the Hackensack River. Although the exact concentrations of pollutants are unknown at this time, the screening samples indicated values below the limitations of Hudson's NJPDES Permit. Additional samples were also collected and sent to PSEG Fossil's certified laboratory for analysis. Within ten minutes, a representative of PSEG Fossil contacted NJDEP via the Spill Hotline.

2. STEPS BEING TAKEN TO DETERMINE THE CAUSE OF THE INCIDENT

PSEG Fossil was able to quickly determine that the source of the release was an aboveground fiberglass wastewater line (the "B" Wastewater Line) that ruptured on the "inlet side" of Hudson's Surge Basin. The Surge Basin is located adjacent to the Hudson's Main Discharge Canal. The "B" Wastewater Line serves as a transfer header between the Hudson's Demineralization (DM) Plant and the Wastewater Treatment Plant (WTP). The Surge Basin is the first component of Hudson's Treatment Works and serves as an equalization/neutralization basin. The water released from the "B" Wastewater Line traveled across a short segment of soil/gravel and into Hudson's Main Discharge Canal, which ultimately discharges to the Hackensack River.

3. STEPS BEING TAKEN TO REDUCE, REMEDIATE AND ELIMINATE THE INCIDENT AND ANY DAMAGE TO THE ENVIRONMENT

PSEG Fossil believes that no further action is necessary and that there has not been any damage to the environment. At the time of the release, the "B" Wastewater Line contained only "rinse water" from the final stages of a "regeneration" at Hudson's DM Plant. The initial screening samples collected at the time of the release contained a pH of 9.0 and metal concentrations (total copper and iron) below 0.1 milligrams per liter (mg/l), which are well within the limitations of Hudson's NJPDES Permit. Hudson also collected additional samples, which were sent to Peg's certified testing laboratory for a complete analysis of all parameters within Hudson's NJPDES Permit. The certified test results will be made available to the NJDEP upon request.

4. DURATION OF THE INCIDENT

It is unknown exactly when the incident commenced, however, within 5 minutes of discovery, PSEG Fossil was able to stop the incident.

5. CAUSE OF THE INCIDENT

Although the exact cause of the failure is presently under investigation, it is believed to be related to a stress failure caused by recent temperature swings in the weather (20 degrees F to 50 degrees F within consecutive 24-hour periods). Since the failure occurred within a few feet from where the piping segment emerges from the ground, it is believed the drastic temperature swings combined with a quick-thaw of the surrounding soil caused a stress-fracture of the piping.

6. STEPS BEING TAKEN TO REDUCE, ELIMINATE AND PREVENT THE RECURRENCE OF THE INCIDENT

The damaged piping segment was replaced on February 18, 2005 and returned to service.

7. ESTIMATE OF THE THREAT TO HUMAN HEALTH AND THE ENVIRONMENT

PSEG Fossil believes that the incident caused no threat to human health or the environment. As previously stated, PSEG Fossil's initial analysis of samples of the release did not reveal contaminants that were above Hudson's permitted effluent limits.

8. MEASURES TAKEN TO REMEDIATE THE PROBLEM AND ANY DAMAGE OR INJURY TO HUMAN HEALTH OR THE ENVIRONMENT, AND TO AVOID REPETITION OF THE PROBLEM

As previously stated, PSEG Fossil replaced the ruptured wastewater line. PSEG Fossil believes that no further action is necessary since there was no injury to human health or the environment.

ADDITIONAL INFORMATION TO DEMONSTRATE AN UPSET, IF NECESSARY

As previously mentioned, PSEG Fossil believes that there has been no exceedance of an effluent limitation. However, if the final analysis of sampling results indicates such an exceedance, PSEG Fossil believes that the incident causing the exceedance was an upset. In accordance with N.J.A.C. 7:14A-6.10(f)4, PSEG Fossil submits the following information to support its assertion that the incident is an upset:

i. Copies of contemporaneous operating logs are attached at **Attachment A.**
ii. The reasons the upset occurred are stated in paragraphs 1, 2 and 5, above. PSEG Fossil believes that the upset was caused by large changes in temperature, and not by any individual.
iii. The facility was operating according to accepted practices and Standard Operating Procedures as evidenced by operating logs **(See Attachment A).**
iv. The upset was caused by natural causes, and not by maintenance operations.

In addition to the information provided above, and pursuant to N.J.A.C. 7:14A-6.11 and N.J.A.C. 7:14-8.3(i), PSEG Fossil submits the following information to substantiate the bases for the company's entitlement to an affirmative defense:

1. The upset was not caused by operational error, improperly designed treatment facilities, inadequate treatment facilities, lack of preventative maintenance or careless or improper operation or maintenance. Hudson routinely inspects and repairs the equipment that rupture and, as stated previously, was operating in accordance with the Station's Standard Operating Procedures.
2. The upset is believed to have been caused by a stress fracture due to a "quick thaw" and a significant and sudden swing in weather conditions.
3. This report satisfies all provisions of N.J.A.C. 7:14A-6.10.
4. The incident was not the result of any testing or laboratory errors. PSEG Fossil reserves its rights to assert testing or laboratory errors upon receipt of final sampling results.
5. The incident was not related to a groundwater remedial action.
6. The NJDEP has not required any remedial measures, and no remedial measures are necessary.
7. An "anticipated" bypass did not cause the incident.

As set forth above, PSEG Fossil has satisfied the requirements for asserting an affirmative defense for the upset at Hudson Generating Station on February 16, 2005.

920980451

If you or your staff has any questions regarding this information please contact Michael G. Cullen, Senior Environmental Engineer, at (201) 217-3672.

Very truly yours,

Francis X. Sullivan
Station Manager
Hudson Generating Station

920980452

Attachment "A"

PUBLIC SERVICE ELECTRIC AND GAS COMPANY

DAILY LOG

TIME	APPARATUS	REMARKS
0745	Skimicide	Started system on manual for 21 circulator
0750	Surge Basin	P.H.-10.41 LVL-6.5' Caustic-2.41' of air
	As Found	#2 vnt vs #s 1&3 o/s - Floor Drains + Regen. Waste
		To Surge Basin to #s 1&2 Lamelle to #2 o.L. Sep. to
		Alt Basin to #1 Mix Tank to Main Basin to Mon. House to Discharge
0800	DMR	Pulled Tech Sheet
0805-0820	#1 P.H. Meter	Standardized
0820-0835	#1 Titrator	Standardized
0845	Skimicide	Swapped to 22 circulator
0845-0905	River+361	Grabbed Samples + Ran P.H. + Split Tro.
0935	Main Basin	P.H.-10.58 @ 17.0°C Fe-.029 Cu-.13 TSS-16
0940	Haz. Sub.	Completed Hazardous Substance Checklist.
0950	Walk over	Completed Daily Walkover Sheet
1000	Flow	WTP / GIS / GIR
		82192739 / O/S / O/C
		81988015
		204724
1000-1015	River+361	Changed Charts
1035-1115	DMR	Entry By Points, Cuts, Cert. Lab Book + Totalizer
1245-1325	Surge Basin	Gathered material needed to calibrate Surge P.H. Probes
		Cut to Surge Basin + Found "B" Chemical Waste Line
		At Chem. Waste Basin Ruptured. Notified Mike Cullen.
		Mike Cole and I went inside to #D.M. area to
		isolate "B" Waste Line
1330-1420	Surge Basin	Cleaned + Calibrated Surge Basin Probes
1440-1455	Surge Basin	Grabbed Sample of Waste Water from Ruptured
		Line + Ran P.H.-9.00 @ 13.0°C
		Fe-.009 m/L
		Cu-.07 m/L

SIGNED

LOCATION Hudson Gen. NJPDES — [signature] / Mike Cole

DEPARTMENT Maint

DATE 2/16/05 DAY Wed.

PRINTED ON RECYCLED PAPER

95-0015 REV 11/93

920980454

DEP CERTIFIED LABORATORY TEST FORM

Date: [illegible]

pH Testing — **Method 4500-H⁺ (Section 5.7 in *Laboratory Manual*)**

WTP Operator Initials: [illegible] Supervisor's Approval: _____

Location	Sample ID#	Time Test Started	Measured pH	
River Water	1	08:53	[illegible]	@Temp 13.2°C
361 Discharge	2	08:58	[illegible]	@Temp 17.7°C
363 Discharge	—	—	[illegible]	@Temp — °C
364 Discharge	—	—	[illegible]	@Temp — °C
365 Discharge	—	—	[illegible]	@Temp — °C
366 Discharge	—	—	[illegible]	@Temp — °C
Split Sample (When Applicable)	— B	—	[illegible]	@Temp — °C

Split Difference [illegible] (B-A)

Observations/Comments: Sample collected from ruptured line @ chemical waste basin
P.H. = 9.00 @ 13°C

TRO Testing — **Method 4500-CI(D) (Section 6.7 in *Laboratory Manual*)**

WTP Operator Initials: [illegible] Supervisor's Approval: _____

361 Discharge — Sample ID # 2

First Titration:	Start at: 08:54	Finish at: 08:55	Result: 0.0 mg/L
Second Titration:	Start at: 08:55	Finish at: 08:56	Result: 0.0 mg/L
Third Titration:	Start at: —	Finish at: —	Result: — mg/L

pH Check of Titrated TRO Sample: 4.31 @ Temp: 17.3°C Average: [illegible] mg/L

363, 364, 365, 366 Discharge (Circle one) — Sample ID # —

First Titration:	Start at: —	Finish at: —	Result: — mg/L
Second Titration:	Start at: —	Finish at: —	Result: — mg/L
Third Titration:	Start at: —	Finish at: —	Result: — mg/L

pH Check of Titrated TRO Sample: — @ Temp: — °C Average: [illegible] mg/L

Split Sample (When Applicable) — Sample ID# 2 B

First Titration:	Start at: 08:58	Finish at: 08:59	Result: 0.0 mg/L
Second Titration:	Start at: 08:59	Finish at: 09:00	Result: 0.0 mg/L
Third Titration:	Start at: —	Finish at: —	Result: — mg/L

Split Difference [illegible] (B-A) Average: [illegible] mg/L

Observations/Comments: P.H. of split TRO · 4.21 @ 17.2°C

NOTE: A black ink pen must be used to fill out this form. No spaces on this form may be left blank.

920980455

DEP CERTIFIED LABORATORY TEST FORM

Date [redacted]

Daily Information

Laboratory Temperature: 20 °C Thermometer# 7
Refrigerator Temperature: 4 °C Thermometer# 9

pH Meter Calibration (Section 5.5.1 in *Laboratory Manual*)

pH Meter # 1 Set Buffer 4 Reading: 4.00 @Temp: 19.3 °C
Set Buffer 10 Reading: 10.01 @Temp: 19.4 °C Slope 95 %

Performance Check (Section 5.5.2 in *Laboratory Manual*)

Read Buffers pH 10: 10.07 @Temp: 19.1 °C pH 7: 7.00 @Temp: 20.0 °C pH 4: 3.99 @Temp: 19.3 °C

Observations/Comments:

Amperometric Titrator Performance Check (Section 6.5.1 in *Laboratory Manual*)
Lot# A4307

Cl₂ Check Standard
Ampule Concentration: 75.01 x 3.00 mL / 1000mL = 0.23 mg/L (Check Standard Concentration)

Titrator # 1
1st Titration 0.23 mg/L 2nd Titration 0.23 mg/L 3rd Titration — mg/L
Average 0.23 mg/L

Observations/Comments:

Sampling and Temperature Testing (Section 4.4 in *Laboratory Manual*) Method 2550

Location	Sample ID#	Time Grabbed	Water Temperature
River Water	1	08:58	[redacted]
361 Discharge	2	09:57	N/A
363 Discharge	—	—:—	[redacted]
364 Discharge	—	—:—	[redacted]
365 Discharge	—	—:—	[redacted]
366 Discharge	—	—:—	[redacted]

Thermometer# —

920980456

PSEG Fossil LLC
Hudson Generating Station
Duffield & Van Keuren Avenues
Jersey City, NJ 07306

JAN 27

N.J.D.E.P.
BUREAU OF ENFORCEMENT

2003 FEB 10 P 12:22

PSEG Fossil LLC

January 24, 2003

Certified Mail: 7099 3400 0016 4590 1226

Administrator of Water Compliance and Enforcement
NJ Department of Environmental Protection
401 East State Street, 4th Floor East
PO Box 422
Trenton, New Jersey 08625-0422

Re: NJPDES 5-Day Written Report (Oil Spill to Outfall 366A)
NJDEP Case Number: 03-01-21-0825-55
NRC Report Number: 634-607
NJPDES PERMIT NO. NJ0000647

Dear Sir/Madam:

PSEG Fossil LLC ("PSEG Fossil") - Hudson Generating Station ("Hudson" or "the Station") is submitting this written report to the New Jersey Department of Environmental Protection ("NJDEP" or "Department"), in accordance with the reporting requirements within N.J.A.C. 7:14A-6.10. Hudson is located at Duffield and Van Keuren Avenues in Jersey City, New Jersey. Hudson is authorized to discharge industrial process wastewater and non-contact cooling water to the Hackensack River pursuant to NJPDES Permit No. NJ0000647.

N.J.A.C. 7:14A-6.10 REPORTING REQUIREMENTS

The following paragraphs correspond to the numbered paragraphs of N.J.A.C. 7:14A-6.10(d), as required pursuant to N.J.A.C. 7:14A-6.10(e):

1. On January 21, 2003 at approximately 8:15 AM, Hudson personnel discovered oil on the pavement in the vicinity of Unit 1 - No. 12 Forced Draft Fan (see attached diagram for location). Upon further investigation, Hudson determined that oil had flowed over land which was as paved surface to a nearby storm drain. Hudson quickly responded by blocking the storm drain to prevent further contamination and isolated/secured the area. The storm drain discharges to the Hackensack River via Hudson's NJPDES Outfall 366A, which is a combined discharge consisting of non-contact cooling water and storm water from miscellaneous yard drains. It is estimated that approximately 15 gallons of hydraulic oil reached the Hackensack River. However, as explained later in this report, Hudson is equipped with a permanently installed containment boom around the discharge of this outfall which prevented the release from migrating up or down river. The spill was promptly contained and cleaned up along the shoreline.

   PSEG Fossil notified the NJDEP hotline and the National Response Center (NRC) of the spill on January 21st and was assigned Case Number 03-01-21-0825-55 by the NJDEP and Report Number 634-607 by the NRC.

BJB000096

94

920980458

2. In parallel with the initial response efforts, Hudson performed an investigation into the root cause of the spill. Hudson determined that the source of the release was a ruptured ¼" oil line from the hydraulic coupling on Unit 1 - No. 12 Forced Draft Fan. Since proper operation of this line requires it to be pressurized, the rupture caused the oil to spray outside the secondary containment into the immediate surrounding area.

3. The storm drain in the vicinity of the release was immediately blocked upon discovery of the spill. Furthermore, the oil supply system to the Forced Draft Fan was immediately shut down when the source of the release was identified. Hudson then contacted Clean Harbors Services to perform the clean-up. Because Clean Harbors personnel were already at the Station performing maintenance on Unit No. 2, they were able to provide an immediate response. Ken's Marine was also dispatched to provide an additional containment boom around the surrounding area of Outfall 366A as a precautionary measure. The majority of the clean up was performed on January 21, 2003, and the balance of the clean up activities along the shoreline were completed on January 22, 2003.

4. The incident is believed to have commenced at approximately 0800 hours on January 21, 2003 and was discovered at approximately 0815 hours. The discharged ceased at approximately 0820 on January 21, 2003. The storm drain was blocked to prevent further oil contamination to the Hackensack River at approximately 0820 hours on January 21, 2003.

5. As described in Item 2, the cause of the incident was a ruptured hydraulic line on No. 12 Forced Draft Fan.

6. Hudson is presently investigating what measures can be implemented to prevent recurrences.

7. Hudson estimates a very low threat to the environment as a result of this incident.

8. Since the majority of the discharge was contained and cleaned up, Hudson does not expect to have caused damage or injury to human health or the environment. Therefore, no additional remedial measures are necessary. The Station will continue to investigate procedures for ensuring that this incident does not reoccur.

If you or a member of your staff has any questions regarding this information please contact Mr. Michael G. Cullen, Senior Environmental Engineer, at 201-217-3672.

Very truly yours,

Francis X. Sullivan
Station Manager
Hudson Generating Station

cc. Helen Wright, NJDEP Northern Bureau of Water Compliance and Enforcement
Michael Walker, Hudson Regional Health Commission

920980459

CF/21 NJ0000647

PSEG Fossil LLC
Hudson Generating Station
Duffield & Van Keuren Avenues
Jersey City, NJ 07306

PSEG Fossil LLC

January 20, 2003

FEDERAL EXPRESS

Administrator of Water Compliance and Enforcement
New Jersey Department of Environmental Protection
401 East State Street, 4th Floor East
PO Box 422
Trenton, New Jersey 08625-0422

Re: NJPDES 5-Day Written Report – Transfer Line Rupture
Case Number: 03-01-15-1454-25
NPDES/NJPDES PERMIT NO. NJ0000647

Dear Sir/Madam:

PSEG Fossil LLC ("PSEG Fossil") is submitting this written report to the New Jersey Department of Environmental Protection ("NJDEP" or "Department"), in accordance with the reporting requirements of N.J.A.C. 7:14A-6.10(e) and to support its claim for an affirmative defense due to an upset at its Hudson Generating Station ("Hudson" or the "Station") pursuant to N.J.A.C. 7:14-8.3(i). Hudson is located at Duffield and Van Keuren Avenues in Jersey City, New Jersey. Hudson is authorized to discharge industrial process wastewater and non-contact cooling water to the Hackensack River pursuant to NJPDES Permit No. NJ0000647.

DESCRIPTION OF INCIDENT

Hudson formerly operated a fly ash slurry system, whereby fly ash was mixed with water to create a slurry and ultimately sluiced to the on-site Fly Ash Settling Ponds. At the mid point between the Station and the Fly Ash Ponds is a Fly Ash Transfer Basin ("FAT Basin"), which was designed as a booster station to convey the slurry through several hundred feet of piping. The FAT Basin houses three transfer pumps that formerly transferred the slurry to the Fly Ash Ponds, via Transfer Lines A, B, and C. After allowing solids to settle out, treated effluent from the Fly Ash Pond was discharged to Hudson's Discharge Canal, via Outfall 61PA. Hudson's Discharge Canal in-turn discharges to the Hackensack River via NJPDES Outfall 361A. Since this fly ash slurry system was removed from service several years ago, the only recent contribution to the FAT Basin and Fly Ash Pond is the natural accumulation of rainwater. Although Hudson continues to generate fly ash, it is now trucked to the Fly Ash Ponds in a dry state and is no longer sluiced with water

On January 15, 2003, rainwater from the FAT Basin was being transferred to the Fly Ash Pond via Transfer Line "A" (note that only one pump and transfer line operates at any give time). At 1430 hours, the line burst, causing a discharge of rainwater to the surrounding soil. There was no impact to the Station's Discharge Canal or the Hackensack River. The transfer activity was quickly secured and the transfer pump was isolated by 1445 hours.

PSEG Fossil notified the NJDEP hotline of the upset on January 15th and was assigned case number 03-01-15-1454-25.

BJB000097

920980461

N.J.A.C. 7:14A-6.10 UNANTICIPATED BYPASS REPORTING REQUIREMENTS

The following paragraphs correspond to the numbered paragraphs of N.J.A.C. 7:14A-6.10(d), as required pursuant to N.J.A.C. 7:14A-6.10(e) for reporting an upset:

1. A rupture of Transfer Line "A" occurred at 1430 hours on January 15, 2003 during the transfer of rainwater from the FAT Basin to the Station's Fly Ash Pond. The incident was discovered and secured at 1445 hours, at which time the transfer pump was isolated. The transfer pump is rated at 2,100 gallons per minute (GPM). The total volume of rainwater discharged was therefore 31,500 gallons (2,100 gpm x 15 minutes). The discharge was limited to the surrounding soil

2. Subsequent investigation by Station personnel revealed the cause of the incident to be a blockage within Transfer Line A, caused by ice within the line.

3. Immediately following shut down of the transfer pump, Station personnel secured the area to preventing discharge to surface water. Because the discharge consisted of rainwater, Hudson does not believe there was any damage to the environment as a result of the discharge. Samples of the rainwater were collected and are presently being analyzed for parameters (total suspended solids and total petroleum hydrocarbons) associated with the Fly Ash Pond's permitted outfall (61PA). Although this lab analyses is not yet available, it will be made available to the NJDEP upon future request. The Station is currently investigating procedures for ensuring that this incident does not reoccur.

4. Station personnel immediately observed the discharge from Transfer Line "A" at 1445 hours on January 15, 2003 and immediately secured the transfer pump. The incident began at 1430 hours, when the transfer pump was placed in service. The duration of the discharge event was therefore 15 minutes.

5. The cause of the incident was an unanticipated ice blockage within Transfer Line resulting from several consecutive days of severe cold, well below freezing temperatures.

6. Station personnel immediately shut down the transfer pump upon discovery of the discharge to prevent further release of rainwater. To the extent possible, the Station will attempt to ensure that transfer lines are free of ice blockage prior to transferring rainwater to the Fly Ash Pond.

7. The discharge did not present a threat to human health or the environment as the discharge primarily consisted of rainwater.

8. The discharge is not believed to have caused damage or injury to human health or the environment, therefore no remedial measures are necessary. See the response at paragraph 6, above, for a list of action the Station is undertaking to prevent repetition of the incident.

The following paragraphs correspond to the numbered paragraphs of N.J.A.C. 7:14A-6.10(f)4, as required for reporting an unanticipated bypass:

i. Copies of contemporaneous operating logs are attached at Attachment A.

iii. Investigation by Station personnel revealed the cause of the incident to be a blockage of

below freezing promoted the formation of ice within the line, resulting in the blockage. Once the transfer pump was brought on line, the high pressures generated within the line caused it to rupture.

iv. The facility was operating according to accepted practices and Standard Operating Procedures as evidenced by operating logs (see Attachment A).

v. The Station provided notice to the NJDEP hotline within the required 24-hour time frame on January 15, 2003 as evidenced by the above-referenced case number.

vi. The Department has not required any remedial measures, and no remedial measures are necessary because the discharge was rainwater.

The following paragraphs correspond to the numbered paragraphs of N.J.A.C. 7:14-8.3(i) to substantiate the bases for PSEG Fossil's entitlement to an affirmative defense for the upset:

1. The discharge was not caused by operational error, improperly designed treatment facilities, inadequate treatment facilities, lack of preventative maintenance or careless or improper operation or maintenance.

2. i. The unanticipated bypass was due to the discharge of rainwater to the surrounding soil caused by a blockage of ice within the transfer line resulting from preceding days with ambient temperatures well below freezing.

ii. The preceding paragraphs of this letter demonstrate compliance with N.J.A.C. 7:14A-6.10.

iii. The incident was not related to a groundwater remedial action.

iv. Hudson is not asserting an affirmative defense due to laboratory error.

v. The Department has not required any remedial measures, and no remedial measures are necessary.

vi. The incident was not caused by an anticipated bypass.

As set forth above, PSEG Fossil has satisfied the requirements for asserting an affirmative defense for the unanticipated bypass at Hudson on January 15, 2003.

If you or a member of your staff has any questions regarding this information please contact Mr. Michael G. Cullen, Senior Environmental Engineer, at 201-217-3672.

Very truly yours,

Francis X. Sullivan

Francis X. Sullivan
Station Manager
Hudson Generating Station

cc. Helen Wright, NJDEP Northern Bureau of Water Compliance and Enforcement
Michael Walker, Hudson Regional Health Commission

Attachment A

PUBLIC SERVICE ELECTRIC AND GAS COMPANY

DAILY LOG

IME	APPARATUS	REMARKS
Ø825		STATUS AS FOUND:
		FLOOR DRAINS & REGEN. WASTE &
		SURGE BASIN & No. 1 & 2 LAMELLA'S &
		No. 2 OIL SEPERATOR & ALT. BASIN &
		MAIN BASIN & DISCHARGE CANAL.
Ø935		MAIN BASIN CHEMISTRY.
		P.H. FE CU TSS
		11.29 Ø.Ø32 Ø.ØØ8 1Ø
1Ø2Ø		FLOW READING
		WTP 61P 61R
		28899300 306879000 O/S
		28634752 30687 9000
		264548 Ø
		(Ø.2645)
1415		DISCOVERED LEAK ON F.A.T.
		BASIN LINE 'A' TO 61P.
	(REQUESTED)	STOPPED PUMP DOWN OF FAT
RTP		BASIN.
~~1445~~	1455	COLLECTED SAMPLES FROM FAT BASIN.
		FOR LAB. P.H. = 6.92, TEMP. 3.3C.

SIGNED

LOCATION NJPDES - HUDSON

DEPARTMENT MAINT. Robert T Pello PTOP X 1530

DATE 1/15/2003 DAY WED.

PRINTED ON RECYCLED PAPER

95-0015 REV 11 93

920980466

920980467

Associate General Environmental Counsel
80 Park Plaza, T5C, Newark, NJ 07102-41
tel: 973 430.5506 fax: 973-602-11

N.J.D.E.P.

03 MAR 19 A 10:15

PSEG

March 18, 2003

VIA FEDERAL EXPRESS

Mr. Joseph M. Mikulka, Chief
Northern Bureau of Water Compliance and Enforcement
New Jersey Department of Environmental Protection
1259 Route 46, Building 2
Parsippany, New Jersey 07054-4191

Re: Settlement Agreement
PSEG Hudson Generating Station
NJPDES No. NJ1230324

Dear Mr. Mikulka:

Enclosed please find a fully executed copy of a Settlement Agreement resolving, without any admission of liability, certain alleged violations of Hudson Generating Station's NJPDES Permit. Also enclosed is certification advising that I am authorized to sign this Agreement on behalf of PSEG Fossil LLC.

A certified check in the amount of Eleven Thousand Dollars ($11,000.00) will be sent to the New Jersey Department of the Treasury, Division of Revenue under separate cover on or before the due date of April 4, 2003, based upon the invoice provided with the Settlement Agreement.

If you have any questions or require any additional information, please do not hesitate to contact me.

Very truly yours,

Maureen F. Vaskis

Maureen F. Vaskis

C: H. Wright
F. X. Sullivan

BJB000098

920980468

State of New Jersey
Department of Environmental Protection
Northern Bureau of Water Compliance and Enforcement
1259 Route 46, Building 2
Parsippany, New Jersey 07054-4191
Telephone (973) 299-7592 Fax (973) 299-7719

ımes E. McGreevey
Governor

Bradley M. Campbell
Commissioner

IN THE MATTER OF :

PSEG HUDSON : SETTLEMENT AGREEMENT

GENERATING STATION :

The following Settlement Agreement is entered into pursuant to the authority vested in the Commissioner of the New Jersey Department of Environmental Protection ("Department") by N.J.S.A. 13:1D-1 et seq.,and the Water Pollution Control Act, N.J.S.A. 58:10A-1 et seq., and duly delegated to the Bureau Chief of the Northern Bureau of Water Compliance and Enforcement.

WHEREAS PSEG Hudson Generating Station ("PSEG") has submitted monthly Discharge Monitoring Reports ("DMR s") to the Department in accordance with New Jersey Pollutant Discharge Elimination System ("NJPDES") permit number NJ0000647; and

WHEREAS a review of the Discharge Monitoring Reports indicated that PSEG failed to sample and report Petroleum Hydrocarbons at discharge 61PA in the November 2000 monitoring period, and failed to sample and report pH and Temperature at discharge 363A in the February 2001 monitoring period; and

WHEREAS in correspondence from the Department to PSEG dated November 12, 2002, the Department noted that PSEG had not presented any extenuating circumstances showing that these violations were beyond PSEG's control; and

WHEREAS PSEG is subject to an assessment of civil administrative penalties for the above referenced violations of failure to sample and report as required in the NJPDES permit, in accordance with N.J.A.C. 7:14-8.5; and

WHEREAS the Department may compromise its claim for a maximum civil administrative penalty and settle this matter in accordance with N.J.A.C. 7:14-8.3; and

WHEREAS in the interest of resolving this matter, PSEG and the Department agree to settle this matter in accordance with the following terms:

NOW, THEREFORE, IT IS HEREBY AGREED THAT:

1. PSEG shall submit a certified or cashier's check in the amount of $11,000 within thirty (30) days of receipt of the fully executed settlement agreement. The check shall be made payable to: "Treasurer, State of New Jersey" and shall be submitted with the specified portion of the attached penalty invoice to:

   New Jersey Department of Treasury
   Division of Revenue
   P.O. Box 417
   Trenton, New Jersey 08625-0417

2. This payment shall constitute full, final, and complete settlement of the violations cited above.

3. In the event that PSEG fails to submit full payment within thirty (30) days of the execution of this Settlement Agreement, then this offer shall be null and void and the Department may pursue all legal remedies including the collection of civil administrative penalties in the full amount provided by law. Notice is further given that this Settlement Agreement includes only the violations identified hereinabove and that the violation of any statutes, rules, permits or permit conditions other than those cited herein may be considered cause for additional enforcement actions, either administrative or judicial, being instituted without further notice. The Department does not waive its right to initiate additional enforcement action for any violations not set forth above.

4. The Department and PSEG enter into this Settlement Agreement without trial or adjudication in order to amicably resolve this matter without any admission of law or fact by either party.

DEPARTMENT OF ENVIRONMENTAL PROTECTION

DATE: 2/25/03 BY: _____
Joseph M. Mikulka, Chief
Northern Bureau of Water
Compliance and Enforcement

PSE&G HUDSON GENERATING STATION

DATE: 3/17/03 BY: Maureen F. Vaskis
(signature)

NAME: Maureen F. Vaskis
(please print)

TITLE: Associate General Environmental Counsel
(please print)

PSEG Fossil LLC
[illegible] Newark, NJ 07102-4194

N.J.D.E.P.
[illegible]
2003 MAR 19 A 9:45

PSEG

CERTIFICATION
AUTHORIZATION TO SIGN SETTLEMENT AGREEMENT

Maureen F. Vaskis, Esq., Associate General Environmental Counsel, represents PSEG Fossil, LLC in matters arising under the federal and state Clean Water Act and their implementing regulations. She provided advice and counsel to Hudson Generating Station with respect to the resolution of the Notice of Violation ("NOV") issued by the New Jersey Department of Environmental Protection and is authorized to sign the Settlement Agreement resolving said NOV on behalf of Hudson Generating Station.

Francis X. Sullivan

March 18, 2003

Sworn and subscribed before me
On March 18, 2003

JUNE BARRETT
NOTARY PUBLIC OF NEW JERSEY
Commission Expires 7/31/2005

920980471

920980472

Central File
NJ0000647

State of New Jersey

James E. McGreevey
Governor

Department of Environmental Protection
Division of Water Quality
P.O. Box 029 Trenton, NJ 08625-0029
Phone: (609) 633-3869
Fax: (609) 984-7938

Bradley M. Campbell
Commissioner

CERTIFIED MAIL
RETURN RECEIPT REQUESTED

JUN 18 2003

Maureen Vaskis, Associate General Environmental Counsel
PSE&G
80 Park Place T5C
Newark, NJ 07102-4194

Re: Final Surface Water Renewal Permit Action
Category: B - Industrial Wastewater
NJPDES Permit No. NJ0000647
Hudson Generating Station
Jersey City, Hudson County

Dear Ms. Vaskis:

Enclosed is a final New Jersey Pollutant Discharge Elimination System (NJPDES) permit action identified above which has been issued in accordance with N.J.A.C. 7:14A. This permit is for the discharge of industrial wastewater consisting predominantly of non-contact cooling water to the Hackensack River.

A summary of the significant and relevant comments received on the draft action during the public comment period, the Department's responses, and an explanation of any changes from the draft action have been included in the Response to Comments document attached hereto as per N.J.A.C. 7:14A-15.16.

Any requests for an adjudicatory hearing shall be submitted in writing by certified mail, or by other means which provide verification of the date of delivery to the Department, within 30 days of receipt of this Surface Water Renewal Permit Action in accordance with N.J.A.C. 7:14A-17.2. You may also request a stay of any contested permit condition as per N.J.A.C. 7:14A-17.6 et seq. The adjudicatory hearing request must be accompanied by a completed Adjudicatory Hearing Request Form; the stay request must be accompanied by a completed Stay Request Form (forms enclosed).

As per N.J.A.C. 7:14A-4.2(e)3, any person planning to continue discharging after the expiration date of an existing NJPDES permit shall file an application for renewal at least 180 calendar days prior to the expiration of the existing permit.

All monitoring shall be conducted in accordance with 1) the Department's "Field Sampling Procedures Manual" applicable at the time of sampling (N.J.A.C. 7:14A-6.5(b)4), and/or 2) the method approved by the Department in Part IV of the permit. The Field Sampling Procedures Manual is available through Maps and Publications Sales Office; Bureau of Revenue, PO Box 417, Trenton, New Jersey 08625, at (609) 777-1038.

BJB000099

920980473

STAY REQUEST AND TRACKING FORM

I. Permit Containing Condition(s) to Be Stayed:

Facility Name:	HUDSON GENERATING STATION
Masterfile Number:	15746
Program Interest (PI) Number:	46808

Issuance Date of Final Permit Decision	Permit Number
6/18/03	NJ0000647

II. Person Requesting the Stay(s):

Name/Organization	Name of Attorney (if applicable)
Address	Address of Attorney
Telephone Number	Telephone Number of Attorney

N.J.A.C. 7:14A-17.6 provides for stays of contested permit conditions. In order for the Department to consider a request for stay, the person making the request must submit a written request to the Department by certified mail or other means which provides verification of the date of delivery. In the request for a stay of each permit condition, a written evaluation must be submitted which addresses each of the factors at N.J.A.C. 7:14A-17.6(c). Briefly stated, these factors include: 1) the permittee's ability to comply with the permit condition using existing treatment facilities, 2) the permittee's ability to comply with the permit condition by implementing low cost short-term modifications to the existing treatment facility, 3) the level of pollutant control actually achieved using short term modifications, 4) the cost to comply with the condition and 5) the environmental impacts granting a stay will have on the receiving waterbody.

This completed stay request form, along with the evaluations mentioned above, shall be submitted to both Howard B. Tompkins, Chief, Bureau of Point Source Permitting Region 1, Division of Water Quality, Department of Environmental Protection, PO Box 029, Trenton, New Jersey, 08625-0029 and the Office of Legal Affairs, Department of Environmental Protection, PO Box 402, Trenton, New Jersey 08625-0402. A person seeking consideration as party to the action who has requested an adjudicatory hearing in accordance with N.J.A.C. 7:14A-17.2 may also request a stay provided notice of the request is also provided to the permittee(s).

Signature: _____ Date: _____

*For NJPDES permits, the procedures for requesting a stay of a final permit condition and for the Department's evaluation and processing of such requests are set forth in N.J.A.C. 7:14A-17.

B. If you are a person seeking consideration as a party to the action:
   1. A statement setting forth each legal or factual question alleged to be at issue;
   2. A statement setting forth the relevance of the legal or factual issue to the permit decision, together with a designation of the specific factual areas to be adjudicated;
   3. A clear and concise factual statement of the nature and scope of your interest which meets the criteria set forth at N.J.A.C. 7:14A-17.3(c)4;
   4. A statement that, upon motion by any party granted by the administrative law judge, or upon order of the administrative law judge's initiative, you shall make yourself, all persons you represent, and all of your officers, directors, employees, consultants, and agents available to appear and testify at the administrative hearing, if granted;
   5. Specific references to the contested permit conditions, as well as suggested revised or alternative permit conditions, including permit denials, which, in your judgment, would be required to implement the purposes of the State Act;
   6. Identification of the basis for any objection to the application of control or treatment technologies, if identified in the basis or fact sheets, and the alternative technologies or combination of technologies which, in your judgment, are necessary to satisfy the requirements of the State Act;

C. The date you received notification of the final permit decision;

D. The names and addresses of all persons whom you represent;

E. A statement as to whether you raised each legal and factual issue during the public comment period in accordance with N.J.A.C. 7:14A-15.13;

F. An estimate of the amount of time required for the hearing;

G. A request, if necessary, for a barrier-free hearing location for disabled persons;

H. A clear indication of any willingness to negotiate a settlement with the Department prior to the Department's processing of your hearing request to the Office of Administrative Law; and

I. This form, completed, signed and dated with all of the information listed above, including attachments, to:
   1. Office of Legal Affairs
      ATTENTION: Adjudicatory Hearing Requests
      Department of Environmental Protection
      401 East State Street
      PO Box 402, Trenton, New Jersey 08625-0402
   2. Howard B. Tompkins, Chief,
      Bureau of Point Source Permitting – Region 1
      Department of Environmental Protection
      401 East State Street
      PO Box 029, Trenton, New Jersey 08625-0029
   3. Any other person named on the permit (if you are a permittee under that permit).
   4. The permittee(s) (if you are a person seeking consideration as a party to the action).

V. Signature: _____ Date: _____

Jeff Thein, Bureau of Point Source Permitting – Region 1

*For NJPDES permits, the procedures for requesting an adjudicatory hearing on a final permit decision and for the Department's evaluation and processing of such requests are set forth in N.J.A.C. 7:14A-17.

RESPONSE: The Department concurs with the comment and hereby administratively corrects the Fact Sheet via this Response to Comments document.

Comment 4: Fact Sheet - *Page 4 of 43.* The description of DSN61SA implies that the installation of the proposed reverse osmosis system is mandated by the Department and as such Hudson is expected "... to reduce potable water use by 20% during drought emergencies such as the one encountered during 2002." PSEG Fossil wishes to clarify that the use of a reverse osmosis system is not mandated by the Department, but could be used by PSEG Fossil voluntarily. Similarly, PSEG Fossil is not required to reduce potable water use by 20%. PSEG Fossil therefore requests that this paragraph be revised to as follows:

"Outfall DSN61SA is a new outfall to the discharge canal which may be utilized to discharge reject water from a reverse osmosis system. The permittee may install and utilize a reverse osmosis system at its discretion to reduce potable water use during drought conditions. The system may be designed to withdraw up to a maximum of 133 gpm of wastewater from the settling basins to be pumped through a reverse osmosis membrane for reuse within the plant. To prevent clogging of the membrane, approximately 33 gpm (0.04 - 0.144 MGD) of water is proposed to be rejected and discharged into the discharge canal."

RESPONSE: The proposed discharge is a result of a May 15, 2002 letter from the permittee to the Department requesting the use of the reverse osmosis system to reduce potable water use during drought conditions. The permittee is correct that the installation and operation of the proposed reverse osmosis system are not currently mandated by the Department. However, the paragraph regarding outfall DSN61SA does not state that the reverse osmosis system is mandated by the Department but rather describes it's function. Therefore, above noted paragraph remains unchanged.

Comment 5: Fact Sheet - *Page 7 of 43.* PSEG Fossil requests that for DSN WTPA the frequency of chemical/metal cleaning events stated in paragraph 4, Total Copper and Total Iron as "once every two to three years" be changed to "once every one to three years." This will be consistent with the statement included on the fourth paragraph of Page 4 of 43 under Facility Description for outfall DSNWTPA. PSEG Fossil also requests that in this section, or elsewhere in the permit, a clarifying statement be added which states, "Chemical/metal cleaning events may be more frequent than once every one to three years depending on the equipment condition / needs of the business."

RESPONSE: The Department concurs with the comment and hereby administratively corrects the Fact Sheet via this Response to Comments document.

Comment 6: Fact Sheet - Page 8 of 43. In the last sentence of the last paragraph of the Whole Effluent Toxicity (WET), a reference has been made to section "B.1 of the TRIR requirements. This reference could not be found. PSEG Fossil suspects that this reference should be changed to section a.i of TRIR toxicity requirements in item E.5 of Part IV, Specific Requirements: Narrative.

RESPONSE: The Department concurs with the comment and hereby administratively corrects the Fact Sheet via this Response to Comments document.

Comment 7: Item 6.J of Fact Sheet - Summary of Permit Conditions; Studies: Section 316(b) of the Clean Water Act, *Entire section.* Please change all references of PSE&G to PSEG Fossil unless they are direct quotes from PSE&G's 1998 §316(b) Report.

caught per unit effort in the vicinity of the station (RM 0-5) from 1986/87 to 1996/97, the Hackensack River is an impaired waterbody with two major cooling water intakes. As noted on page 20 of the Fact Sheet, in EPA's February, 2002 proposed Phase II regulations for existing facilities, the agency stressed the need to take into account the entire waterbody when assessing the impact of a single facility. EPA stated:

> In addition to impingement and entrainment losses associated with the operation of the cooling water intake structure, EPA is concerned about the cumulative overall degradation of the aquatic environment as a consequence of (1) multiple intake structures operating in the same watershed or in the same or nearby reaches and (2) intakes located within or adjacent to an impaired waterbody. Historically, impacts related to cooling water intake structures have been evaluated on a facility-by-facility basis. The potential cumulative effects of multiple intakes located within a specific waterbody or along a coastal segment were not typically assessed and thus are largely unknown.

Based on these factors, the Department made a determination that an analysis of alternative intake technologies was necessary and therefore the above noted Fact Sheet language shall remain unchanged.

Comment 11: Fact Sheet - *Page 21 of 43, Alternative 1.* PSEG Fossil requests that the Department use the more ecologically appropriate velocity upstream of the screen. The first sentence of the second paragraph should therefore be revised to state, "...where the velocities upstream of the screen range from 1.3 to 1.7 feet per second."

RESPONSE: The sentence in question is taken from the permittee's November 1998 316(b) Report, page 1-3 and therefore the sentence shall remain unchanged.

Comment 12: Fact Sheet - *Page 22 of 43, Alternative 3.*

PSEG Fossil requests that the Department clarify that the screens to be installed will be of Modified Ristroph Screens, designed to be consistent with current standards of the screen manufacturer, that have been installed and successfully tested pursuant to the Salem NJPDES Permit (Permit No. NJ0005622).

RESPONSE: The Department concurs with the comment and hereby administratively corrects the Fact Sheet via this Response to Comments document.

Comment 13: Fact Sheet - *Page 30 of 43.* In the fourth line of the last paragraph, the outfall DSN361 is missing the suffix "A". For consistency, this designation should be changed to DSN361A.

RESPONSE: The Department concurs with the comment and hereby administratively corrects the Fact Sheet via this Response to Comments document.

Comment 14: Fact Sheet - *Page 31 of 43.* The preceding section (last paragraph on Page 30 of 43), it is stated that the Department is granting a 316(a) variance from effluent limits that would otherwise be imposed to meet water quality standards because the existing effluent limits are protective of the Balanced Indigenous Population of aquatic life. For completeness and clarity, PSEG Fossil requests that NJDEP repeat that statement in this section.

RESPONSE: The Department concurs with the comment and hereby administratively corrects the Fact Sheet via this Response to Comments document.

920980477

final permit in accordance with N.J.A.C. 7:14C-1.9(b) because they were detected in the sludge at significant quantities and are otherwise expected to be present in the sludge removed. The Department agrees the parameters antimony, cadmium, calcium, manganese, molybdenum, potassium, selenium, silver and thallium should not be included in the final permit and they have been removed.

Comment 20: PART IV – SPECIFIC REQUIREMENTS: NARRATIVE, ***Page 1 of 5.*** Item A.1.i. of the Monitoring Requirements state that flow shall be measured using flow meter. While Hudson monitors flow by using flow meters at DSNs WTPA, 61PA, and future outfall DSN61SA, flows from DSNs 361A, 363A, 364A, 365A, and 366A are calculated. PSEG Fossil therefore requests that this item be revised accordingly

RESPONSE: The Department concurs with the comment and hereby corrects Item A.1.i. of Part IV.

Comment 21: PART IV – SPECIFIC REQUIREMENTS: NARRATIVE, ***Page 1 of 5.*** Item A.1.m. of the Monitoring Requirements state that Chlorine Produced Oxidants samples shall be taken once during each two hour period of chlorination. This is contrary to the sampling frequencies of 3/Week for DSN 361A and 1/Month for DSNs 364A, 365A, and 366A as stated in Part III, Limits and Monitoring Requirements Tables. In order to avoid this confusion, PSEG Fossil suggests the following text:

"CPO samples shall be monitored only during the use of biocide."

RESPONSE: The Department concurs with the comment and hereby removes Item A.1.m. from Part IV.

Comment 22: PART IV – SPECIFIC REQUIREMENTS: NARRATIVE, ***Page 1 of 6.*** **Monitoring Requirements A.1.** PSEG Fossil requests that an additional item be included under Monitoring Requirements to clarify that batch sampling requirements for total iron, total copper, total nickel and total zinc included in Table III-I-1, Limits and Monitoring Requirements for outfall DSNWTPA are applicable only during discharge of chemical/metal cleaning wastes. PSEG Fossil suggests that this section include the following statement:

"p. Batch samples at DSNWTPA shall be taken during the discharge of chemical/metal cleaning wastewater."

RESPONSE: The Department concurs with the comment and hereby adds Item A.1.p. to Part IV.

Comment 23: PART IV – SPECIFIC REQUIREMENTS: NARRATIVE, Section 316(b) Report Submittal Requirements. PSEG Fossil notes that the title of this subsection refers to Section 316(b) Report Submissions. However, the text of the proposed permit condition only addresses the development of and submissions of a plan of study and a demonstration relating to thermal effects under §316(a). PSEG Fossil also notes that the submittal of a thermal 316 study workplan within 18 months from the effective date of this document and the submittal of the thermal 316 study final report no later than 180 days prior to the expiration of this document are contrary to the requirements stated in the Fact Sheet. In the third sentence (9th line) of the last paragraph on Page 30 of 43 in Item 6.J of Fact Sheet: Summary of Permit Conditions under Studies for Section 316(a) of the Clean Water Act it is stated that "....the permittee is not presently required to conduct a 316(a) Study as part of this renewal permit action."

PSEG Fossil requests that the Department revise this section by deleting the references of thermal studies and including the following language:

FACILITY SUBMITTALS

1. GDR - General Discharge Requirements

Task Description	Actual Due Date
Submit a Complete Permit Renewal Application	02/02/2008

2. B - Industrial Wastewater

Task Description	Actual Due Date
Certification of Operations and Maintenance (O&M) Manual Preparation	10/30/2003
Submit an Acute Whole Effluent Toxicity Test Report	08/26/2004
Thermal 316 Study Workplan	02/01/2005
Submit an Acute Whole Effluent Toxicity Test Report	08/26/2005
Submit an Acute Whole Effluent Toxicity Test Report	08/26/2006
Submit an Acute Whole Effluent Toxicity Test Report	08/26/2007
Thermal 316 Study Final Report	02/02/2008

920980479

NEW JERSEY POLLUTANT DISCHARGE ELIMINATION SYSTEM

The New Jersey Department of Environmental Protection hereby grants you a NJPDES permit for the facility/activity named in this document. This permit is the regulatory mechanism used by the Department to help ensure your discharge will not harm the environment. By complying with the terms and conditions specified, you are assuming an important role in protecting New Jersey's valuable water resources. Your acceptance of this permit is an agreement to conform with all of its provisions when constructing, installing, modifying, or operating any facility for the collection, treatment, or discharge of pollutants to waters of the state. If you have any questions about this document, please feel free to contact the Department representative listed in the permit cover letter. Your cooperation in helping us protect and safeguard our state's environment is appreciated.

Permit Number: NJ0000647

Final: Surface Water Renewal Permit Action

Permittee:
PSEG Fossil LLC
80 Park Plaza
Newark, NJ 07102

Co-Permittee:

Property Owner:
PSEG Fossil LLC
80 Park Plaza
Newark, NJ 07102

Location Of Activity:
Hudson Generating Station
Duffield & Van Keuren Avenues
Jersey City, NJ 07306

Authorization(s) Covered Under This Approval	Issuance Date	Effective Date	Expiration Date
B - Industrial Wastewater	6/18/03	8/1/03	7/31/08

By Authority of:
Commissioner's Office

DEP AUTHORIZATION
Howard B. Tompkins, Chief
Bureau of Point Source Permitting – Region 1
Division of Water Quality

(Terms, conditions and provisions attached hereto)

Table of Contents

This permit package contains the items listed below:

1. **Cover Letter**
2. **Table of Contents**
3. **Public Notice**
4. **Fact Sheet / Statement of Basis**
5. **NJPDES Permit Authorization Page**
6. **Part I – General Requirements: NJPDES**
7. **Part II – General Requirements: Discharge Categories**
8. **Part III – Limits and Monitoring Requirements**
9. **Part IV – Specific Requirements: Narrative**

BJB000101

920980482

New Jersey Department of Environmental Protection
Division of Water Quality
Bureau of Point Source Permitting Region 1

PUBLIC NOTICE

Notice is hereby given that the New Jersey Department of Environmental Protection (NJDEP) proposes to renew the New Jersey Pollutant Discharge Elimination System (NJPDES) Discharge to Surface Water (DSW) Permit NJ0000647 in accordance with N.J.A.C. 7:14A-1 et seq., and by authority of the Water Pollution Control Act at N.J.S.A. 58:10A-1 et seq., for the following discharge::

Applicant or Permittee	Facility
PSE&G Fossil LLC 80 Park Place Newark, NJ 07102	Hudson Generating Station Duffield & Van Keuren Avenues Jersey City, NJ 07306

The existing facility discharges approximately 592 MGD of untreated non-contact cooling water and treated industrial wastewater into the Hackensack River, classified as SE-3 waters. The Hackensack River empties into Newark Bay.

Modification provisions as cited in the permit may be initiated in accordance with the provisions set forth in Part IV and upon written notification from the Department.

A draft NJPDES permit renewal has been prepared for this facility based on the administrative record filed at the NJDEP, 401 East State Street, Trenton, New Jersey 08625. Copies of the draft document are obtainable, for a nominal charge, and the administrative record is available for inspection by appointment only, Monday through Friday. If you are interested in scheduling an appointment or requesting specific information regarding the draft document, contact Jeff Thein of the Bureau of Point Source Permitting Region 1 at (609) 633-3869.

Written comments or a request that the Department hold a non-adversarial public hearing on the draft document must be submitted in writing to Howard B. Tompkins, Chief, or Attention: Comments on Public Notice NJ0000647, Bureau of Point Source Permitting Region 1, P.O. Box 029, Trenton, NJ 08625 by the close of the public comment period, which closes thirty calendar days after publication of this notice in the newspaper. All persons, including the applicant, who believe that any condition of this draft document is inappropriate or that the Department's decision to issue this draft document is inappropriate, must raise all reasonable arguments and factual grounds supporting their position, including all supporting materials, during the public comment period.

The NJDEP will respond to all significant and timely comments upon issuance of the final document. The permittee and each person who has submitted written comments will receive notice of the Department's permit decision.

New Jersey Department of Environmental Protection
Division of Water Quality
Bureau of Point Source Permitting Region 1

Masterfile #: 15746 **PI #: 46808**

FACT SHEET

This fact sheet sets forth the principle facts and the significant factual, legal, and policy considerations examined during preparation of the draft permit. This action has been prepared in accordance with the New Jersey Water Pollution Control Act and its implementing regulations at N.J.A.C. 7:14A-1 et seq. - The New Jersey Pollutant Discharge Elimination System.

PERMIT ACTION: Surface Water Renewal Permit Action

The permittee has applied for a New Jersey Pollutant Discharge Elimination System (NJPDES) Surface Water Renewal Permit Action through an application dated 08/02/1994 and amended 11/5/98.

1 Name and Address of the Applicant:

PSE&G Fossil LLC
80 Park Plaza
Newark, NJ 07101

2 Name and Address of the Facility/Site:

Hudson Generating Station
Duffield & Van Keuren Aves
Jersey City, NJ 07306

3 Discharge Location Information:

Outfall:	DSN361A	Outfall:	DSN363A
Receiving Water:	Hackensack River	Receiving Water:	Hackensack River
Via :		Via :	
Classification:	SE-3	Classification:	SE-3
County:	Hudson	County:	Hudson
Municipality:	Jersey City	Municipality:	Jersey City
WMA*:	05	WMA*:	05
Watershed:	Hackensack River (below/incl Hirshfeld Brook)	Watershed:	Hackensack River (below/incl Hirshfeld Brook)
Subwatershed:	Hackensack River (below Amtrak bridge)	Subwatershed:	Hackensack River (below Amtrak bridge)
HUC 14:	02030103180100	HUC 14:	02030103180100
Latitude:	40° 45' 06.1"	Latitude:	40° 44' 58.2"
Longitude:	74° 04' 36.2"	Longitude:	74° 04' 28.4"

Outfall:	DSN364A	Outfall:	DSN365A
Receiving Water:	Hackensack River	Receiving Water:	Hackensack River
Via :		Via :	
Classification:	SE-3	Classification:	SE-3
County:	Hudson	County:	Hudson
Municipality:	Jersey City	Municipality:	Jersey City

920980484

WMA*:	05
Watershed:	Hackensack River (below/incl Hirshfeld Brook)
Subwatershed:	Hackensack River (below Amtrak bridge)
HUC 14:	02030103180100
Latitude:	40° 44' 51.4"
Longitude:	74° 04' 25.6"

Outfall:	DSN366A
Receiving Water:	Hackensack River
Via :	
Classification:	SE-3
County:	Hudson
Municipality:	Jersey City
WMA*:	05
Watershed:	Hackensack River (below/incl Hirshfeld Brook)
Subwatershed:	Hackensack River (below Amtrak bridge)
HUC 14:	02030103180100
Latitude:	40° 44' 50"
Longitude:	74° 04' 25.5"

Outfall:	DSN61PA
Receiving Water:	Hackensack River
Via :	
Classification:	SE-3
County:	Hudson
Municipality:	Jersey City
WMA*:	05
Watershed:	Hackensack River (below/incl Hirshfeld Brook)
Subwatershed:	Hackensack River (below Amtrak bridge)
HUC 14:	02030103180100
Latitude:	40° 45' 06.5"
Longitude:	74° 04' 30.8"

Outfall:	DSNWTPA
Receiving Water:	Hackensack River
Via :	
Classification:	SE-3
County:	Hudson
Municipality:	Jersey City
WMA*:	05
Watershed:	Hackensack River (below/incl Hirshfeld Brook)
Subwatershed:	Hackensack River (below Amtrak bridge)

WMA*:	05
Watershed:	Hackensack River (below/incl Hirshfeld Brook)
Subwatershed:	Hackensack River (below Amtrak bridge)
HUC 14:	02030103180100
Latitude:	40° 44' 51.3"
Longitude:	74° 04' 25.6"

Outfall:	DSN61SA
Receiving Water:	Hackensack River
Via :	
Classification:	SE-3
County:	Hudson
Municipality:	Jersey City
WMA*:	05
Watershed:	Hackensack River (below/incl Hirshfeld Brook)
Subwatershed:	Hackensack River (below Amtrak bridge)
HUC 14:	02030103180100
Latitude:	40° 45' 00.4"
Longitude:	74° 04' 24.5"

Outfall:	DSN61RA
Receiving Water:	Hackensack River
Via :	
Classification:	SE-3
County:	Hudson
Municipality:	Jersey City
WMA*:	05
Watershed:	Hackensack River (below/incl Hirshfeld Brook)
Subwatershed:	Hackensack River (below Amtrak bridge)
HUC 14:	02030103180100
Latitude:	40° 45' 06.2"
Longitude:	74° 04' 34.6"

920980485

HUC 14:	02030103180100
Latitude:	40° 45' 00.4"
Longitude:	74° 04' 24.5"

* "WMA" means Watershed Management Area

4 Facility Description:

The facility is classified as a major discharger by the Department of Environmental Protection (NJDEP) in accordance with the United States Environmental Protection Agency (EPA) rating criteria. The facility's estimated combined long term average flow is 592 million gallons per day (MGD).

The facility is involved in the steam electric power generation industry, SIC code 4911. The station consists of three fossil-fired electric generating units. Units 1 and 2 are steam electric generators, and Unit 3 is a combustion turbine. Units 1, 2, and 3 became operational in December 1964, December 1968 and December 1967, respectively. The net summer ratings for Units 1, 2, and 3 are 383, 600, and 129 megawatts, respectively. Unit 3 operates infrequently and only in response to peak demands for electricity.

The permittee discharges approximately an average of 579.3 MGD and maximum of 892.8 MGD of untreated non-contact cooling water, boiler drainage, and stormwater through **DSN361A** to the Hackensack River via the discharge canal as noted in the flow diagram towards the end of this fact sheet. The boiler drainage discharge occurs infrequently when a boiler is over-pressurized and safety valves discharge boiler water to DSN361 until a safe operating pressure has been reached. Stormwater from the north drains of the turbine deck is also disharged via this outfall. Based on a 10-year, 24 hour rainfall event, the maximum stormwater discharge from the turbine deck north drains is estimated to be 0.17 MGD.

The discharge through outfall **DSN363A** consists of non-contact cooling water from the Unit 3 gas turbine. River water is withdrawn at the circulating water pump intake structure by a dedicated service water pump. The river water is brominated/chlorinated to protect the heat exchangers from marine and organic fouling. Approximately 0.095 MGD of this non-contact cooling water is discharged untreated through this outfall to the Hackensack River.

The discharge through **DSN364A** primarily consists of untreated stormwater runoff from the southwest side of the turbine deck. Intermittently, small amounts of water drained from auxiliary equipment may be discharged through this outfall. Under emergency conditions, this outfall may also contain a discharge from the No. 1 flood pump. This pump is used to prevent damage or destruction of the power plant in the event of severe flooding and has not been activated in several years. Based on a 10-year, 24 hour rainfall event, the maximum discharge from this outfall to the Hackensack River is approximately 0.034 MGD.

Outfall **DSN365A** discharges untreated non-contact cooling water from auxiliary equipment and stormwater from the No. 1 Unit boiler roof drains. River water is withdrawn at the circulating water pump intake structure by service water pumps. The river water is brominated/chlorinated to protect the heat exchangers from marine and organic fouling. The average daily flow is approximately 9.3 MGD and the maximum projected stormwater discharge, based on a 10-year, 24 hour rainfall event is estimated to be 0.18 MGD.

Outfall **DSN366A** discharges untreated non-contact cooling water from auxiliary equipment and stormwater from the following locations: the southeast drains of the turbine deck, No. 2 Unit boiler roof drains, and miscellaneous yard drains. Under emergency conditions, this outfall may also contain discharge from the No. 2 flood pump. This pump is used to prevent damage or destruction of the power plant in the event of severe flooding and has not been activated in several years. River water is withdrawn at the circulating water pump intake structure by service water pumps. The

920980486

river water is brominated/chlorinated to protect the heat exchangers from marine and organic fouling. The average daily flow is approximately 10.4 MGD and the maximum projected stormwater discharge, based on a 10-year, 24 hour rainfall event is estimated to be 0.41 MGD.

The discharge from the wastewater treatment plant (WTP) enters the Hackensack River via the discharge canal from outfall DSNWTPA. The WTP is designed to receive and process low volume wastewater from the building and equipment drain systems for Units 1, 2, and 3; the demineralization systems for Units 1, 2, and 3; and wastes from chemical and/or metal cleaning activities.

Discharges from building and equipment drains typically consist of river water and potable city water leakage from auxiliary equipment, condensate from miscellaneous boiler drains and blowdown, and stormwater that collects in various yard drains, roof drains, and secondary containments. Boiler blowdown consists primarily of demineralized water with dilute concentrations of hydrazine (10-20 ppb) and ammonia (0.4-0.75 ppm).

Influent from the demineralization system consists of regenerative wastewater from ion exchange units and reject water from reverse osmosis equipment. Once every one to three years, the WTP processes wastes from chemical and/or metal cleaning operations.

The WTP consists of equalization/neutralization, oil/water separation, metal precipitation, sedimentation, and sludge collection and dewatering. Wastewater entering the WTP is first equalized in a surge basin via a high volume mixing system. If necessary, the pH of the wastewater is adjusted in the surge basin through caustic injection. Wastewater is then transferred to Lamella gravity separators for the precipitation of metals and suspended solids. A coagulant/polymer is sometimes used at the inlet to the Lamellas to aid in the settling process. Wastewater then passes through API gravity separators for the removal of oil. In addition, mechanical skimmers located at each settling basin are used as needed to remove any oil that passes through the Lamella settlers and API separators. Oil collected by the Lamella gravity settlers, API separators, and skimmers is periodically drained and disposed of in accordance with applicable regulations.

Upon exiting the API separators the wastewater receives final polishing in the main and alternate settling basins. The average daily flow is approximately 0.36 MGD. Any residual oil, metals, or suspended solids are removed in these basins, prior to discharge to the Hackensack River via the discharge canal.

Sludge generated by the WTP are transferred to two sludge holding tanks and dewatered on-site using a plate and frame filter press system. The dewatered sludge is disposed of at an USEPA-approved disposal facility.

Outfall DSN61SA is a new outfall to the discharge canal resulting from a proposed reverse osmosis system to be installed on-site. The system is to be used to reduce potable water use by 20% during drought emergencies such as the one encountered during 2002. The system is designed to withdraw 133 gpm from the main settling basin and pumped through a reverse osmosis membrane for reuse within the plant. To prevent clogging of the membrane, approximately 33 gpm (0.04-0.144 MGD) of water is proposed to be rejected and discharged into the discharge canal.

Outfall DSN61PA discharges untreated wastewater from the two fly ash settling ponds to the Hackensack River via the discharge canal. Two fly ash settling ponds accept river water mixed with fly ash from the plant's coal burning equipment. The river water is used as a sluicing medium to transport the fly ash to the settling ponds. The average daily flow is approximately 2.3 MGD.

Outfall DSN61RA was used for the discharge of wastewater from the bottom ash pond. However, as bottom ash is no longer sluiced to this pond and only stormwater which collects in this pond is discharged, no effluent monitoring is required as part of this draft renewal permit.

The following maps and diagrams are included towards the end of this fact sheet:

1. USGS quadrangle map indicating the location of the facility and discharge point(s) – page 37.

920980486 A

2. Map showing general location of the Hackensack River and the Hudson Generating Station – page 38.
3. Map showing wetlands and important wildlife areas of the Hackensack River – page 39.
4. Diagram showing location of cooling water intake and discharge with respect to the Hackensack River – page 40.
5. Diagram showing the once through cooling water system – page 41.
6. Schematic of water flow at the Hudson Generating Station – page 42.
7. Diagram showing Hudson Waste Treatment Plant and Reverse Osmosis System – page 43.

The receiving waterbody is also classified as a short-listed waterbody, according to 304(l) criteria.

5 Type and Quantity of the Wastes or Pollutants:

The Permit Summary Table towards the end of this fact sheet contains a summary of the quantity and quality of pollutants treated and discharged from the facility and the proposed effluent limitations. Effluent data was obtained from the facility's Monitoring Report Forms for the time period specified in the table and the application submitted by the applicant.

6 Summary of Permit Conditions:

The existing and proposed effluent limitations and other pertinent information regarding the draft permit are described below:

A. Basis for Effluent Limitations and Permit Conditions - General:

The effluent limitations and permit conditions in this permit have been developed to ensure compliance with the following:

1. NJPDES Regulations (N.J.A.C. 7:14A)
2. New Jersey Surface Water Quality Standards (N.J.A.C. 7:9B)
4. *Wastewater Discharge Requirements (N.J.A.C. 7:9-5.1 et seq.),*
5. Existing permit limitations in accordance with N.J.A.C. 7:14A-13.19 and Section 402 of the federal Clean Water Act (antibacksliding requirements)
6. Permit limitations in accordance with N.J.A.C. 7:9B-1.5(d) (antidegradation requirements)
7. Statewide Water Quality Management Planning Rules (N.J.A.C. 7:15).
8. Technology Based Treatment Requirements or Effluent Limitation Guidelines Requirements (N.J.A.C. 7:14A-13.2 to 13.4)
9. Sludge Quality Assurance Regulations (N.J.A.C. 7:14C)

Technology based limitations are authorized by Section 301 of the Clean Water Act, 40 CFR 122, N.J.S.A. 58:10A-4, and N.J.A.C. 7:14A-13.2(a)1.ii., 13.3(b), and 13.4. In general, effluent limitations are based on Effluent Limitation Guidelines (ELGs), developed by the United States Environmental Protection Agency (USEPA), or on case-by-case limitations developed through a Best Professional Judgment (BPJ) analysis in cases where ELGs are not available or appropriate. ELGs are minimum technology based requirements applicable on a nation-wide basis. ELGs consider the category of industry that produce common pollutants taking into account the specific factors unique to a particular type of industry (manufacturing process, type and quantity of pollutants generated, types of treatment facilities available to treat the pollutants, etc.). ELGs are published in 40 CFR Subchapter N. BPJ determinations are authorized by Section 402 (a)(1) of the Clean Water Act. This facility is subject to 40 CFR 423 – The Steam Electric Power Generating Point Source Category.

In accordance with N.J.A.C. 13.5, Water Quality Based Effluent Limitations (WQBELs) are imposed when it has been determined that the discharge of a pollutant causes an excursion of the New Jersey Surface Water Quality Standards (SWQS), N.J.A.C. 7:9B-1.1 et seq., and the Federal Water Quality Standards, 40 CFR Part 131. WQBELs are authorized by Section 301 of the Clean Water Act, 40 CFR 122, N.J.S.A. 58:10A-4, and N.J.A.C. 7:14A-13.2 and

13.3. The policies used to develop WQBELs are contained in the State and Federal Standards. Specific procedures, methodologies, and equations are contained in the current USEPA "Technical Support Document for Water Quality-based Toxics Control" (TSD) (EPA- 505/2-90-001) and are referenced in N.J.A.C. 7:14A-13.5 and 13.6.

Expression of all effluent limitations are in accordance with N.J.A.C. 7:14A-13.14 and 13.15.

Whole effluent toxicity limitations are expressed as a minimum as a percent.

B. Basis and Derivation for Effluent Limitations - Specific:

DSN361A

1. Flow: This permit does not include a numerical limitation for flow. Monitoring conditions are applied pursuant to N.J.A.C. 7:14A-13.13.

2. pH (Influent & Effluent): The effluent limitations are based on the antibacksliding provisions as cited in N.J.A.C. 7:14A-13.19.

3. Temperature (Influent, Effluent & Difference), and Heat: See the section entitled, '316(a) of the Clean Water Act', pages 27-30 of the Fact Sheet.

4. Chlorine Produced Oxidants (CPO):

   In accordance with the Surface Water Quality Standards N.J.A.C. 7:9B-1 et seq. Total Residual Chlorine (TRC) is now referred to as CPO.

   The proposed effluent limitations for CPO are in accordance with the antibacksliding provisions as cited in N.J.A.C. 7:14A-13.19 and 40 CFR 423.13(b) [Effluent limitations guidelines representing the degree of effluent reduction attainable by the application of the best available technology economically achievable (BAT)]. CPO may not be discharged from any single generating unit for more than two hours per day. Simultaneous multi-unit chlorination is permitted.

DSN363A

1. Flow: This permit does not include a numerical limitation for flow. Monitoring conditions are applied pursuant to N.J.A.C. 7:14A-13.13.

2. pH (Influent & Effluent) and Temperature (Influent, Effluent & Difference): The effluent limitations are based on the antibacksliding provisions as cited in N.J.A.C. 7:14A-13.19

DSN364A, DSN365A, DSN366A

1. Flow: This permit does not include a numerical limitation for flow. Monitoring conditions are applied pursuant to N.J.A.C. 7:14A-13.13.

2. pH (Influent & Effluent) and Temperature (Influent, Effluent & Difference): The effluent limitations are based on the antibacksliding provisions as cited in N.J.A.C. 7:14A-13.19

3. Chlorine Produced Oxidants (CPO):

   In accordance with the Surface Water Quality Standards N.J.A.C. 7:9B-1 et seq. Total Residual Chlorine (TRC) is now referred to as CPO.

The proposed effluent limitations for CPO are in accordance with the antibacksliding provisions as cited in N.J.A.C. 7:14A-13.19 and 40 CFR 423.13(b) [Effluent limitations guidelines representing the degree of effluent reduction attainable by the application of the best available technology economically achievable (BAT)]. CPO may not be discharged from any single generating unit for more than two hours per day. Simultaneous multi-unit chlorination is permitted.

DSN61PA

1. Flow: This permit does not include a numerical limitation for flow. Monitoring conditions are applied pursuant to N.J.A.C. 7:14A-13.13.

2. Petroleum Hydrocarbons: The effluent limitations are based on N.J.A.C. 7:14A-12.8(c).

3. Total Suspended Solids: The effluent limitations are based on the antibacksliding provisions as cited in N.J.A.C. 7:14A-13.19 and 40 CFR 423.12(b)(4) [Best Practicable Control Technology currently available for fly ash and bottom ash transport water].

DSNWTPA

1. Flow: This permit does not include a numerical limitation for flow. Monitoring conditions are applied pursuant to N.J.A.C. 7:14A-13.13.

2. Petroleum Hydrocarbons: The effluent limitations are based on N.J.A.C. 7:14A-12.8(c).

3. Total Suspended Solids and Total Organic Carbon: The effluent limitations are based on the antibacksliding provisions as cited in N.J.A.C. 7:14A-13.19. Due to consistent compliance, the monitoring frequency for these parameters shall be reduced to monthly in accordance with N.J.A.C. 7:14A-14.2(c)2.

4. Total Copper and Total Iron: The effluent limitations are based on 40 CFR 423.13(e) [Best Available Technology economically achievable (BAT) for chemical metal cleaning wastes] and 40 CFR423.12(b)(5) [Best Practicable Control Technology currently available (BPT) for metal cleaning wastes]. As chemical and/or metal cleaning operations occur once every two to three years and the permittee has demonstrated consistent compliance with these parameters, the monitoring frequency shall be reduced to once per chemical and/or metal cleaning event in accordance with N.J.A.C. 7:14A-14.2(c)2.

5. Total Zinc and Total Nickel: The effluent limitations are based on the antibacksliding provisions as cited in N.J.A.C. 7:14A-13.19. The monitoring frequency shall be continued at once per chemical and/or metal cleaning event in accordance with N.J.A.C. 7:14A-14.2(c)1.

6. Whole Effluent Toxicity (WET):

   Section 101(a) of the Clean Water Act (CWA) establishes a national policy of restoring and maintaining the chemical, physical and biological integrity of the Nation's waters. In addition, section 101(a)(3) of the CWA and the State's Surface Water Quality Standards (SWQS) at N.J.A.C. 7:9B-1.5(a)3 state that the discharge of toxic pollutants in toxic amounts is prohibited. Further, 40 CFR 122.44(d) and N.J.A.C. 7:14A-13.6(a) require that where the Department determines using site-specific WET data that a discharge causes, shows a reasonable potential to cause, or contributes to an excursion above the SWQS, the permitting authority must establish effluent limits for WET. In order to satisfy the requirements of the CWA, the State's SWQS and the NJPDES Regulations, the need for a water quality based effluent limitation (WQBEL) for WET was evaluated for this discharge.

920980489

WQBELs for acute and chronic WET were calculated in accordance with N.J.A.C. 7:14A-13.6 and USEPA's "Technical Support Document for Water Quality Based Toxics Control (EPA/505/2-90-001), March 1991" (TSD).

These limits are developed using an acute dilution factor (Df_a) of 10 and a chronic dilution factor (Df_c) of 20 in lieu of a dilution study for this tidally influenced portion of the Hackensack River.

The Df_a and Df_c were then used to determine acute and chronic Wasteload Allocations (WLAs) consistent with N.J.A.C. 7:14A-13.5, using a steady state model, as specified in section 5.4.1 of the TSD. Consistent with recommendations in the TSD, values of 0.3 acute toxic unit (TU_a) and 1.0 chronic toxic unit (TU_c) were used to interpret the narrative water quality criteria for WET contained at N.J.A.C. 7:9B-1.14(c) (see Response to Comments 13-74 through 13-89, 29 NJR 1861, (May 5, 1997)). The acute WLA (WLA_a) was translated to equivalent chronic toxic units (WLA_{ac}), to enable comparison of acute and chronic WET limits, by multiplying the WLA_a by a default acute to chronic ratio (ACR) of 10.

$WLA_a = 10 \times 0.3 = 3$ $\quad WLA_{ac} = 3 \times 10 = 30$
$WLA_c = 20 \times 1 = 20$

The acute and chronic WLAs are then converted to an acute Long Term Average (LTA_{ac}) of 9.63 and a chronic LTA (LTA_c) of 10.54, using a default coefficient of variation (CV) of 0.6, and multipliers of 0.321 and 0.527 for the acute and chronic LTAs respectively. Those multipliers are based on the 99th percentile consistent with Response to Comments 13-74 through 13-89, 29 NJR 1861 and are found on Page 102 of the TSD. The resultant long term average values were evaluated and the more protective (e.g. lower) value selected for translation into a daily maximum WET limit using the applicable 99th percentile multiplier, as found on Page 103 of the TSD.

$LTA_{ac} = 30 \times 0.321 = 9.63$ **Acute more stringent**
$LTA_c = 20 \times 0.527 = 10.54$

Maximum Daily Limit (MDL_{ac}) = LTA_{ac} x multiplier = $9.63 \times 3.11 = 30$
MDL_{ac}/ACR = Limit in $TU_a = 30/10 = 3$

The daily maximum acute WET limit of 3 TU_as was then converted to a permit limitation expressed as an LC50. The resultant applicable limitation is an LC50 = 33.3 % effluent.

The applicable acute WET limit is less than the minimum state standard acute toxicity limit of an LC50≥50% effluent. Therefore, the minimum state standard limit becomes the applicable limit, in accordance with N.J.A.C. 7.9-5.7(a) and 7:14A-13.19.

The test species method to be used for acute testing shall be the *Mysidopsis bahia* 96 hour definitive test. Such selection is based on the saline characteristics of the receiving stream, the existing permit, N.J.A.C. 7:9B-1.5 and N.J.A.C. 7:18, the Regulations Governing the Certification of Laboratories and Environmental Measurements (N.J.A.C. 7:18).

The monitoring frequency for acute toxicity has been reduced from quarterly to semi-annually in accordance with 7:14A-14.2(c) based on consistent compliance with the applicable WET limit.

The Toxicity Reduction Implementation Requirements (TRIR) are included in accordance with N.J.A.C. 7:14A-13.17(a), 7:14A-6.2(a)5 and recommendations in Section 5.8 of the TSD. The requirements are necessary to ensure compliance with the applicable WET toxicity limitation on its effective date and to expedite compliance with the WET toxicity limitation should exceedances of the WET limitation occur. As included in section B.1 of the TRIR requirements, the initial step of the TRIR is to identify the variability of the effluent toxicity and to verify that a consistent toxicity problem does in fact exist.

920980490

Effluent samples for conducting WET testing are to be collected after the last treatment step, consistent with the collection location for all other parameters.

7. Foam: The narrative foam limitation is based on N.J.A.C. 7:14A-12.6.

DSN61SA

1. Flow: This permit does not include a numerical limitation for flow. Monitoring conditions are applied pursuant to N.J.A.C. 7:14A-13.13.

2. Total Suspended Solids and Total Dissolved Solids: Monitoring for these parameters is required as reverse osmosis reject water in general contains high concentrations of solids.

C. Influent Monitoring Requirements:

In order to calculate heat rate, temperature difference, net TSS, and to set possible minimum and maximum pH effluent limitations, influent monitoring is required, where necessary, for temperature, pH, and TSS for outfalls DSN361A, DSN61PA, DSN363A, DSN364A, DSN365A, and DSN366A in accordance with N.J.A.C. 7:14A-6.5(b) and -11.2(a)2.

D. Effluent Monitoring Requirements:

Sample types are in accordance with N.J.A.C. 7:14A-14. Monitoring frequencies are based on N.J.A.C. 7:14A-14.2(c)1.

In accordance with N.J.A.C. 7:14A-14.2, the permittee may submit a written request for a modification of the permit to decrease monitoring frequencies for non-limited parameters listed in Part III if site specific conditions indicate the applicability of such a modification.

E. Recommended Quantitation Levels Policy (RQLs):

The Department developed the RQLs to insure that useful data is provided to the Department in order to characterize the discharger's effluent. The Department recommends that the permittee achieve detection levels that are at least as sensitive as the RQLs found in Part III. The Department has determined that the quantitation levels listed therein can be reliably and consistently achieved by most state certified laboratories for most of the listed pollutants using the appropriate procedures specified in 40 CFR Part 136. FAILURE TO ATTAIN A QUANTITATION LEVEL AS SENSITIVE AS A LISTED RQL IS NOT A VIOLATION OF THE PERMIT, BUT DOES TRIGGER SOME ADDITIONAL REPORTING REQUIREMENTS FOR THE PERMITTEE AS SPECIFIED IN PART IV OF THE PERMIT.

F. Reporting Requirements:

All data requested to be submitted by this permit shall be reported on the Discharge Monitoring Reports (DMRs), Waste Characterization Reports (WCR), and Residual Transfer Reports (RTR) as appropriate and submitted to the Department as required by N.J.A.C. 7:14A-6.8(a).

920980491

G. General conditions:

In accordance with N.J.A.C. 7:14A-2.3 and 6.1(b), specific rules from the New Jersey Administrative Code have been incorporated either expressly or by reference in Part I and Part II.

H. Operator Classification Number:

The operator classification requirement is no longer included in the permit. To obtain or determine the appropriate licensed operator classification for the treatment works specified, the permittee shall contact the Bureau of Engineering North at (609) 292-6894 to determine the appropriate licensed operator classification for the treatment works specified.

I. Residuals/Sludge Conditions:

Analysis of the industrial sludge for the parameters found on Table III-G-1 of Part III is required because they were detected in previous self reported sludge quality monitoring data submitted to the Department under the Sludge Quality Assurance Regulations (N.J.A.C. 7:14C). The frequency of monitoring is dependent on the amount of sludge produced. Since the amount of sludge generated is greater than 290 dry metric tons per year, but less than 1,500 dry metric tons per year the frequency of monitoring is once every six calendar months.

All treatment works with a discharge regulated under N.J.A.C. 7:14A must have permits that implement applicable technical standards for residuals management. Generally, the permit issued to the treatment works generating the residual will include applicable residual quality monitoring as well as other general conditions required by N.J.A.C. 7:14A-6. In addition, the permit may include conditions related to any aspect of residual management developed on a case-by-case basis where the Department determines that such conditions are necessary to protect public health and the environment.

The permit may also include conditions establishing requirements for treatment works that send residual to other facilities for final use or disposal. Thus, ALL residual preparers (that is, generators as well as persons who manage the residual) are required to submit basic information concerning their residual use and disposal practices. This basic information is submitted by compliance with the Sludge Quality Assurance Regulations (N.J.A.C. 7:14C).

The documents listed below have been used to establish the residual conditions of the Draft Permit:

a. United States Environmental Protection Agency "Standards for the use or disposal of sewage sludge" (40 CFR Part 503),
b. "New Jersey Pollutant Discharge Elimination System" (N.J.A.C. 7:14A),
c. Technical Manual for Residuals Management, May 1998,
d. USEPA Part 503 Implementation Guidance, EPA 833-R-95-001, October 1995. This document is a compilation of federal requirements, management practices and EPA recommended permit conditions for sewage sludge use and management practices,
e. USEPA A Plain English Guide to the EPA Part 503 Biosolids Rule, EPA/832/R-93/003, September 1994,
f. New Jersey "Statewide Sludge Management Plan", November 1987 and
g. New Jersey "Sludge Quality Assurance Regulations" (SQAR), N.J.A.C. 7:14C.

J. Studies:

Section 316(b) of the Clean Water Act

The Federal Water Pollution Control Act, also known as the Clean Water Act (CWA), 33 U.S.C. 1251 et seq., seeks to "restore and maintain the chemical, physical, and biological integrity of the nation's waters." 33 U.S.C. 1251(a). The CWA establishes a comprehensive regulatory program, key elements of which are (1) a prohibition on the discharge

920980492

of pollutants from point sources to waters of the U.S., except as authorized by the statute; (2) authority for EPA or authorized States or Tribes to issue National Pollutant Discharge Elimination System (NPDES) permits that regulate the discharge of pollutants; and (3) requirements for EPA to develop effluent limitations guidelines and standards and for States to develop water quality standards that are the basis for the limitations required in NPDES permits.

Section 316(b) of the Clean Water Act provides that any standard established pursuant to section 301 or 306 of the CWA and applicable to a point source must require that the location, design, construction, and capacity of cooling water intake structures reflect the best technology available (BTA) for minimizing adverse environmental impact. In 1977 EPA issued draft guidance for determining BTA to minimize adverse environmental impact from cooling water intake structures. In the absence of section 316(b) regulations or final guidance, the 1977 draft guidance has served as applicable guidance for section 316(b) determinations.

An Amended Consent Decree was filed on November 22, 2000, in the United States District Court, Southern District of New York, in Riverkeeper Inc., et al. v. Whitman, No. 93 Civ 0314 (AGS), a case brought against EPA by a coalition of individuals and environmental groups. The original Consent Decree, filed on October 10, 1995, provided that EPA was to propose regulations implementing section 316(b) by July 2, 1999, and take final action with respect to those regulations by August 13, 2001. Under subsequent interim orders and the Amended Consent Decree, EPA has divided the rulemaking into three phases and is working under new deadlines. As required by the Amended Consent Decree, on November 9, 2001, EPA took final action on a rule governing cooling water intake structures used by new facilities (Phase I). 66 FR 65255 (December 18, 2001). The Amended Consent Decree also requires that EPA issue a proposal by February 28, 2002, and take final action by August 28, 2003 (Phase II – existing facilities). The decree requires further that EPA propose regulations governing cooling water intake structures used, at a minimum, by smaller-flow power plants and factories in four industrial sectors (pulp and paper making, petroleum and coal products manufacturing, chemical and allied manufacturing, and primary metal manufacturing) by June 15, 2003, and take final action by December 15, 2004 (Phase III). Under the Amended Consent Decree, EPA is to propose regulations in Phase II that are: "applicable to, at a minimum: (i) Existing utilities (i.e., facilities that both generate and transmit electric power) that employ a cooling water intake structure, and whose intake flow levels exceed a minimum threshold to be determined by EPA during the Phase II rulemaking process; and (ii) existing non-utility power producers (i.e., facilities that generate electric power but sell it to another entity for transmission) that employ a cooling water intake structure, and whose intake flow levels exceed a minimum threshold to be determined by EPA during the Phase II rulemaking process."

On November 22, 2002, EPA and plaintiffs in Riverkeeper, Inc. v. Whitman submitted a proposed Second Amended Consent Decree to the U.S. District Court, Southern District of New York, which the court signed on November 25, 2002.

The Second Amended Consent Decree extends the deadlines for EPA to propose and take final action on regulations under section 316(b) of the Clean Water Act to minimize the adverse environmental impact of cooling water intake structures at industrial facilities. Under the Second Amended Consent Decree, the new deadlines for rulemaking are as follows:

> Phase II regulations governing, at a minimum, existing utilities and non-utility power producers that employ a cooling water intake structure, and whose flow levels exceed a minimum threshold to be determined by EPA: Final action by February 16, 2004 (EPA proposed Phase II regulations on February 28, 2002).
>
> Phase III regulations governing, at a minimum, existing facilities that employ a cooling water intake structure, that are not covered by the Phase II rule, and whose intake flow levels exceed a minimum threshold to be determined by EPA: Proposal by November 1, 2004; Final action by June 1, 2006

(NOTE: EPA proposed Phase I regulations governing new facilities that employ a cooling water intake structure on July 20, 2000. EPA took Final action on the Phase I regulations on November 9, 2001).

Phase II existing facilities, as defined by EPA in their proposed Phase II regulations, are facilities that commenced construction before January 17, 2002 and design flows over 50 MGD. Although this regulation is not final, the

proposed Phase II regulation is supported by three major documents, in addition to prior 316(b) guidance, which were used in the evaluation of the Hudson Generating Station's cooling water intake structure:

1. Economic and Benefits Analysis for the Proposed Section 316(b) Phase II Existing Facilities Rule (EPA-821-R-02-001), hereafter referred to as the EBA. This document presents the analysis of compliance costs, closures, energy supply effects and benefits associated with the proposed rule.

2. Case Study Analysis for the Proposed Section 316(b) Phase II Existing Facilities Rule (EPA-821-R-02-002), hereafter referred to as the Case Study Document. This document presents the information gathered from the watershed and facility level case studies and methodology used to determine baseline impingement and entrainment losses.

3. Technical Development Document for the Proposed Section 316(b) Phase II Existing Facilities Rule (EPA-821-R-02-003), hereafter referred to as the Technical Development Document. This document presents detailed information on the methods used to develop unit costs and describes the set of technologies that may be used to meet the proposed rule's requirements.

Hackensack Meadowlands Description

The Hackensack River originates in the Palisades near Haverstraw, New York and flows southward over a distance of 50 miles to Newark Bay. The River is separated by Oradell Dam into a non-tidal freshwater reach and a tidal brackish reach. Oradell Dam is located just above New Milford, New Jersey at River Mile (RM) 22.5 (as measured from the mouth of the river) and restricts the saline and brackish waters to the lower one-third of the river. The facility's intake structure is located at RM 3.2, a portion of the river considered mesohaline with salinity levels in the range of 5-18 parts per thousand.

The Hackensack Meadowlands habitat complex includes the remaining tidal wetlands and adjacent palustrine wetlands and uplands along the lower Hackensack River north of Jersey City, New Jersey. The habitat complex is generally bounded by the Conrail railroad tracks and Route 17 to the west and south, the New York, Susquehanna, and Western Railroad tracks to the east, and Route 46 to the north; its northwest corner is bounded by the runways at Teterboro Airport. The complex also includes the aquatic habitat and adjacent upland habitat of Overpeck Creek, which feeds into the Hackensack River at the complex's northeastern end. This complex encompasses the remaining wetlands and open space habitats that support significant concentrations of waterfowl, wading birds, shorebirds, raptors, anadromous fish, and estuarine fish. This approximately 3,400-hectare (8,400-acre) wetland area is the largest remaining brackish wetland complex in the New York - New Jersey Harbor Estuary.

The Hackensack Meadowlands is a large wetland complex dominated by intertidal and intermittently flooded common reed (*Phragmites australis*) marshes and lesser areas of the following wetland types: shallow tidal bay/mudflat; low salt marsh dominated by low marsh cordgrass (*Spartina alterniflora*); remnant high salt marsh dominated by high marsh cordgrass (*Spartina patens*); brackish impoundments; freshwater impoundments; and remnant palustrine forest dominated by pin oak (*Quercus palustris*), red maple (*Acer rubrum*), and swamp white oak (*Quercus bicolor*). Grassland, shrubland, and early successional forest are the upland habitat types on the landfills, with small undeveloped uplands scattered around the edge of the Meadowlands.

The Hackensack Meadowlands drains an area of about 522 square kilometers (202 square miles) from the Hackensack River, Overpeck Creek, and direct runoff from the basin. The tidal range is 1.4 meters (4.7 feet) at the mouth of the river and 0.5 meters (1.7 feet) at the upstream limit of tide. The width of the Hackensack River ranges from 140 to 145 meters (900 to 1,500 feet) from the mouth of the river north. There are 5.6 kilometers (3.5 miles) of dredged, maintained, shipping channel 90 to 150 meters (300 to 500 feet) wide and 9.0 meters (30 feet) deep. From the town of Little Ferry to the town of Hackensack, there is a 3.3-meter (11-foot) deep navigation channel. The area between the dredged areas has a natural 6.5-meter (21-foot) average depth. A recent year-round sampling program recorded annual temperature ranges in the Hackensack River of 2.9 to 37°C (37 to 98.6°F) and an annual range of dissolved oxygen concentrations from 1.0 to 15.5 milligrams per liter. Salinity in the Hackensack River ranges from 0 to 16 parts per

thousand; the reach of the river from the mouth upriver to Cromakill Creek is a moderate salinity (mesohaline) zone supporting both marine and estuarine invertebrates, fish, and turtles, while the reach of the river above Cromakill Creek to just upriver of Hackensack is a low salinity (oligohaline) zone supporting both estuarine and freshwater invertebrates, fish, and turtles.

The Hackensack Meadowlands area is situated in the heart of the urban, industrialized core of the New York Bight region. There continues to be significant pressure to fill additional areas, most of which are privately owned, for residential, commercial, industrial, and transportation uses in this already greatly fragmented wetlands habitat complex. Because of the historical losses of wetlands in this area as well as throughout the New York City metropolitan region, and because of the significant fish and wildlife resources found here, further losses of wetlands and open space in the Meadowlands would be expected to have an increasingly detrimental effect on fish and wildlife populations in the area. Although much of the wetland area in the Meadowlands is degraded and has a relatively low value for waterbirds, it still serves as important existing open space for migratory birds, functions as flood storage area, and retains the potential to be enhanced to more diverse and productive wetland habitat. Contamination from landfills and various other sites is common in the Meadowlands; over 200 sites have been the subject of state and/or federal regulatory action due to contamination. Oradell Dam on the Hackensack River, like many obstructions in the New York Bight, has prevented fish from reaching all or portions of their former spawning grounds. Leachate and air pollution from landfills continues to threaten the air and water quality of the Meadowlands and the region. Stormwater runoff and other nonpoint source pollution from the developed residential, commercial and industrial areas surrounding the Meadowlands contribute large amounts of nutrients, suspended solids, organic matter, and toxics to the system. These sources, along with numerous industrial, municipal and combined sewer overflow discharges within the Hackensack Meadowlands Development Commission district have historically had a detrimental effect on the marine life of the Hackensack River. Currently there are New Jersey Fish Consumption Advisories for Striped Bass, Bluefish and Blue crabs in the Hackensack River due to contamination from PCBs, dioxins, and chlordane.

The U.S. Fish and Wildlife Service has found that the large remaining brackish marshes of the Hackensack Meadowlands are regionally significant, and support seasonal or year-round populations of 88 species of special emphasis or listed species, incorporating 29 species of fish and 55 species of birds, and including the following federally and state-listed species:

Federally listed endangered
peregrine falcon (*Falco peregrinus*)
Federal species of concern
northern diamondback terrapin (*Malaclemys t. terrapin*)
northern goshawk (*Accipiter gentilis*)
State-listed endangered
pied-billed grebe (*Podilymbus podiceps*)
Cooper's hawk (*Accipiter cooperii*)
northern harrier (*Circus cyaneus*)
least tern (*Sterna antillarum*)
black skimmer (*Rhynchops niger*)
short-eared owl (*Asio flammeus*)
State-listed threatened
great blue heron (*Ardea herodias*)
yellow-crowned night-heron (*Nycticorax violaceus*)
long-eared owl (*Asio otus*)
savannah sparrow (*Passerculcus sandwichensis*)

920980495

In their March 2002 report entitled "Harbor Health/Human Health, An Analysis of Environmental Indicators for the NY/NJ Harbor Estuary", the NY/NJ Harbor Estuary Program (HEP) reported:

> Generally the news is good. Thanks to programs implemented under Federal and State environmental statutes, raw sewage and toxic materials are no longer discharged to the estuary to the extent they used to be. As a result, levels of contaminants in sediments and fish and concentrations of bacteria in the water have decreased over time. However, there is still room for much improvement.

PSE&G's studies of the marine life of the Hackensack River during the past 30 years as part of their 316(b) demonstrations support HEP's finding that improvement is occurring in the NY/NJ Harbor complex. Three separate 316(b) studies, conducted in 1972/1973, 1986/1987, and 1996/1997, show improved water quality and marine diversity and abundance. Dissolved Oxygen measured in the vicinity of the station near the river bottom in 1972 ranged from 0.5 to 3.9 mg/l (New Jersey Surface Water Quality Criteria for this waterbody – not less than 4.0 mg/l). Dissolved Oxygen measured in the vicinity of the station in 1996 ranged from 3.7 to 6.8 mg/l. Likewise an increase in the diversity of marine life in the vicinity of the station was observed over this time. A total of 29 fish species were collected during the 1972/1973 study, 51 fish species were collected during the 1986/1987 study, and 65 fish species were collected during the 1996/1997 study. Of the fish collected with bottom trawls during the 1972/73 study, 78% were mummichog (also known as the mud minnow or common killifish), a highly pollutant tolerant species able to survive in water bodies of low oxygen concentrations. By the 1996/97 study, mummichog accounted for less than 1% of collected species.

This reduction in mummichog as a percent of the fish community in the vicinity of the Hudson Generating Station is in accordance with the mummichog's natural habitat, which consists of tidal creeks in shallow areas less than twelve feet deep. As the portion of the river near the station consists of a channel anywhere from 40 to 47 feet deep with steep embankments on either shore and the mummichog lives out its life cycle within a home range of only 30-40 meters, this species should not represent a significant percentage of the marine life in this section of the river.

Environmental Impacts Associated With Cooling Water Intake Structures

The majority of environmental impacts associated with intake structures are caused by water withdrawals that ultimately result in aquatic organism losses. Aquatic organisms drawn into cooling water intake structures are either impinged on components of the cooling water intake structure or entrained in the cooling water system itself. Impingement takes place when organisms are trapped against intake screens by the force of the water passing through the cooling water intake structure. Impingement can result in starvation and exhaustion (organisms are trapped against an intake screen or other barrier at the entrance to the cooling water intake structure), asphyxiation (organisms are pressed against an intake screen or other barrier at the entrance to the cooling water intake structure by velocity forces that prevent proper gill movement, or organisms are removed from the water for prolonged periods of time), and descaling (fish lose scales when removed from an intake screen by a wash system) as well as other physical harms. Entrainment occurs when organisms are drawn through the cooling water intake structure into the cooling system. Organisms that become entrained are normally relatively small benthic, planktonic,and nektonic organisms, including early life stages of fish and shellfish. Many of these small organisms serve as prey for larger organisms that are found higher on the food chain. As entrained organisms pass through a plant's cooling system they are subject to mechanical, thermal, and/or toxic stress. Sources of such stress include physical impacts in the pumps and condenser tubing, pressure changes caused by diversion of the cooling water into the plant or by the hydraulic effects of the condensers, sheer stress, thermal shock in the condenser and discharge canal, and chemical toxemia induced by antifouling agents such as chlorine produced oxidants. EPA, in their proposed Phase II Regulations, found mortality rates of entrained organisms varied by species; mortality rates for fish can vary from 2 to 97 percent depending on the species and life stage entrained. Naked goby larvae demonstrated mortality rates as low as 2 percent whereas bay anchovy larvae mortality rates were as high as 97 percent. Macroinvertebrate mortality ranged from 0 to 84 percent for several species evaluated, but rates were usually less than 29 percent.

920980496

Hudson Generating Station's 316(b) Report

The 316(b) report, dated November, 1998, contains evaluations and proposed modifications of the existing cooling water intake structure based upon entrainment and impingement data collected from April 1996 through March 1997, biological data collected from the river during the same period, Station operational characteristics during the six year period of 1991-1996, and projected operation of the station until its planned retirement in the year 2013 (Unit 1) and 2022 (Unit 2). Information from the 1972/1973 and 1986/1987 studies was also presented for comparison purposes.

In order to determine the effect of the station's cooling water intake structure, PSE&G selected thirteen fish species and 4 macroinvertebrate species as Representative Important Species (RIS) to study. The macroinvertebrate species were the blue crab, grass shrimp, opossum shrimp, and scud. The fish species were the Atlantic silverside, bay anchovy, blueback herring, gizzard shad, mummichog, American shad, Atlantic menhaden, Atlantic tomcod, bluefish, striped bass, weakfish, white perch, and winter flounder. Each of these species was selected because of one or more of the following characteristics: relatively high involvement with the intake, a range of sensitivity to entrainment and impingement representative of other members of the local biological community, importance to the food web or overall ecology of the river, importance to commercial or recreational fisheries, or other particular concerns of the regulatory agencies.

All of the above noted RIS fish species were included among the U.S. Fish and Wildlife Service's 29 reported fish species of special emphasis in their study of the Hackensack Meadowlands. The RIS species have been consistently detected in their previous 316(b) studies and therefore the Department concurs with PSE&G's RIS selections.

The information provided on the following three pages regarding the RIS fish species in the New York Bight Watershed is taken from the report entitled, "Significant Habitats and Habitat Complexes of the New York Bight Watershed", U.S. Fish and Wildlife Service's Southern New England-New York Bight Coastal Ecosystems Program, November 1997:

Diadromous Fishes

Diadromous is a general category describing fish that spend portions of their life cycles partially in fresh water and partially in salt water. These represent both anadromous and catadromous fish. Anadromous fishes spend most of their adult lives at sea, but return to fresh water to spawn. Catadromous is a term used for a special category of marine fishes who spend most of their adult lives in fresh water, but must return to the sea to spawn. True anadromous fish migrate from the ocean to spawn in freshwater rivers or sometimes in the brackish upper reaches of the estuary. Catadromous fishes, on the other hand, spawn in the marine environment and move to the riverine environment to mature over a several-year period.

Habitat area for diadromous fish in the New York Bight watershed declined as early as the 1800's, when free-flowing rivers were dammed and their energy harnessed to support the industrial revolution; continued habitat loss and continuous overharvesting of fishery resources have left these once substantial fisheries as fragments of their former capacities.

Anadromous fishes

Seven species of true herrings occur in the New York Bight area: alewife and blueback, collectively called river herrings; American shad; the less common hickory shad and gizzard shad; and two marine non-anadromous species, Atlantic menhaden and Atlantic herring. The herring family represents large numbers of fish in the Bight, and the two marine species are dominant biomass components in the marine ecosystem, while the Alosids are the dominant biomass in the freshwater system. The true anadromous fish, however, have all undergone reduced populations because of common problems of overharvesting, pollution, and the restriction of freshwater spawning habitat areas, principally through dams and other obstructions of fish passage. The locks at Troy are used by these fish, increasing their range into the upper Hudson and Mohawk systems. This increase in available habitat may compensate at the population level for local biomass declines in the lower watershed.

920980497

Species	Common name	Spawning season	Spawning temp. °C (°F)	Spawning zone	Egg location in water column	Larvae location
Alosa aestivalis	Blueback herring (A-F/AN)	April to June	20-25 (68-77)	fresh or brackish	essentially pelagic	fresh
Alosa sapidissima	American shad (A-F/AN)	April to June	12-21 (53.6-69.8)	fresh and brackish	demersal or pelagic	fresh and brackish
Brevoortia tyrannus	Atlantic menhaden (A)	fall and spring	8-26 (46.4-78.8)	marine	pelagic	fresh to marine
Dorosoma cepedianum	Gizzard shad (A-F/AN)	late spring to early summer	10-28 (50-82.4)	fresh	demersal attached	fresh and brackish

Moronidae (temperate river basses)

The two temperate river bass of the Bight region share a number of physical and morphological similarities and are difficult to tell apart during their early life stages. The striped bass is strongly anadromous and highly migratory, while the white perch is more or less restricted to estuarine waters and seldom found in open marine waters. The Hudson River is one of two major East Coast spawning areas for striped bass, contributing significantly to the adult population that summers along coastal New England. Striped bass spawn in the freshwater section of the Hudson above river mile 120 (Coxsackie to Troy).

Species	Common name	Spawning season	Spawning temp. °C (°F)	Spawning zone	Egg location in water column	Larvae location
Morone americana	White perch (A-F)	April to May	10-19 (50-66.2)	Brackish to fresh	demersal	fresh to estuarine
Morone saxatilis	Striped bass (A-F/AN)	May to June	10-25 (50-77)	Fresh to brackish	semi-demersal	fresh to brackish estuarine

Other species of note

Atlantic tomcod (*Microgadus tomcod*) is another species of fish prevalent in the Bight that deserves discussion. Although not truly an anadromous species, the tomcod, an inshore coastal fish, moves upstream into brackish waters to spawn. In the Hudson River, tomcod spawn between November and February in the tidal waters between West Point and Poughkeepsie, New York. Incubation of their sticky, demersal eggs takes place at temperatures from 0 to 2.5°C (32 to 36.5°F). They are fast-growing and short-lived, seldom living past their second year. Because of their short life span and abundance in estuarine systems, as well as their sensitivity to environmental stresses, tomcod numbers serve as an excellent measure of environmental health.

The bay anchovy (*Anchoa mitchilli*) is a small, delicate, estuarine-spawning, schooling fish that is abundant in the mid-Atlantic region. The bay anchovy occurs in great numbers in the lower Hudson River estuary, moving between brackish and salt water apparently in response to spawning and growth needs. Bay anchovy is an important prey item for striped bass, bluefish, weakfish, white perch, and many piscivorous birds. Spawning occurs over an extended period from May to September with water temperatures ranging from 15 to 30°C (59 to 86°F). Bay anchovy are often the dominant species in the Hudson River estuary and are well-suited to the area since they are planktonic feeders; detritus from sewage supplements their main food source.

920980498

Estuarine Fishes

The New York Bight is generally defined as that region of the Atlantic Ocean enclosed within the area from Montauk Point, Long Island, to Cape May, New Jersey, seaward to the edge of the continental shelf. The complex of bays and lagoons, sandy barrier islands, tidal streams and creeks, and river mouths is a significant feature of this area. The Bight has a vast continental shelf, extending seaward nearly 160 kilometers (100 miles), and can be characterized as having a gentle slope and two ancient river valleys, the Hudson and Block canyons, as well as numerous shoals and sand ridges in the near coastal area. The Bight proper forms a triangle, with the apex at New York City (Hudson River) and the base stretching across the edge of the continental shelf. The area's diurnal tides are influenced by this shape, causing the greatest tidal range at the apex area (about 1.5 meters [5 feet]) and lesser tidal influence at the open areas of the unconstricted triangle base. Tidal range is about 1 meter (3 feet) at Montauk and about 1.2 meters (4 feet) in the Cape May vicinity.

The richness of fish species in the New York Bight is due to a unique situation. The area is a transition zone where the northern cold water (boreal) species and the warm water (temperate) fauna meet, with both groups at the limits of their respective ranges. There are a few endemic fish species in the Bight; however, the majority are seasonal migrants, taking advantage of the opportunity to use the area for reproduction and/or growth. The vastness of the relatively shallow continental shelf area and the number of high-quality estuary systems that nurture and protect estuarine-dependent fish are major contributing factors to this area's diversity and regionally-significant secondary production.

Estuarine fishes are resident species of tidal waters where salinities range from tidal fresh to marine, or from 0.5 to 30 parts per thousand (ppt). The species in this grouping are known to stray into nontidal fresh water or, at the other extreme, into the coastal region of the marine environment. Estuarine fishes in general spawn in salinities greater than 5 ppt, and are not known for mass spawning migrations as are many of the anadromous fish that use the estuarine areas as migration pathways. Most estuarine species begin spawning in late spring and continue throughout most of the summer. Optimum spawning salinities for most of these fishes are 5 to 20 ppt. Within this diverse group of fish, a general onshore and offshore pattern of seasonal movements occurs, i.e., upstream and towards shore in spring and summer, and downstream to deeper waters in fall and winter.

There are a number of resident estuarine fishes in the New York Bight whose entire existence depends on the shallow water habitats provided by the backbarrier lagoons, tidal rivers, and creeks of the area. These fish form an important forage base for larger predatory fish and piscivorous birds. Examples of this group include Atlantic silverside (*Menidia menidia*), mummichog (*Fundulus heteroclitus*), striped killifish (*Fundulus majalis*), sheepshead minnow (*Cyprinodon variegatus*), bay anchovy (*Anchoa mitchilli*), three-spined stickleback (*Gasterosteus aculeatus*), and four-spined stickleback (*Apeltes quadracus*); all life stages of these species can be found in the estuary system throughout the year.

There are many estuarine migratory species in the Bight that depend on the estuary primarily as a nursery area, and or as a forage area for juveniles or adults. Winter flounder (*Pleuronectes americanus*), tautog (*Tautoga onitis*), black sea bass (*Centropristis striata*), Atlantic menhaden (*Brevoortia tyrannus*), bluefish (*Pomatomus saltatrix*), mullet (*Mugil* ssp.), sandlance (*Ammodytes americanus*), bay anchovy, and striped bass (*Morone saxatilis*) are the most prevalent species of this group to use the backbarrier lagoons, large tidal rivers, and tidal creeks for spawning or nurseries. These fish tend to migrate in and out of the system on a seasonal basis. The anadromous component of this group annually migrates into the freshwater areas to spawn. Winter flounder and sandlance spawn in the estuarine zone. Bay and ocean spawners such as bay anchovy, sea bass, bluefish, tautog, and menhaden have larval and early juvenile stages that will drift toward or swim shoreward to seek out the nutrient-rich, food-abundant, estuarine area where, during the warmer months, they have the greatest opportunity to grow. The nearshore and shallow water habitats are the most vulnerable aquatic habitats in this system because of the anthropogenic influences and insults to them, plus overuse by an expanding human population that values these areas for development and recreation.

PSE&G's Fish Community Description and Entrainment and Impingement Impact

The information provided by PSE&G in their November, 1998 316(b) report regarding fish habitat within RM 0 – 10 is comparable to the information noted above from the U.S. Fish and Wildlife Service's Southern New England-New York Bight Coastal Ecosystems Program report. From these two reports, eight of the thirteen fish species studied are candidates to be potentially impacted significantly via impingement and/or entrainment by the station due to the following factors; year round occurrence of the species near the station, presence of egg and/or larvae life stage near the station, and/or decreasing presence of species in river or NY/NJ Harbor complex. These species and their rates of collection in PSE&G's 1996/97 entrainment and impingement studies are:

1. **Winter Flounder** – A species which uses large tidal rivers for spawning and nurseries. PSE&G found all stages (egg, larvae, juvenile, adult) of this species near the station. However, this species is highly demersal, as are its eggs, thereby limiting the species exposure to the intake structure. This species accounted for only 0.28% of fish collected during the 1996/97 entrainment abundance sampling at Hudson Station. However, it was the fifth most abundant fish collected during 1996/97 impingement studies, representing 6.59% of fish collected.

2. **White Perch** – A species which is generally restricted to estuarine waters, PSE&G found all stages of life near the station. Its eggs are demersal which accounts for the low entrainment found at the station (0.04% of fish collected). However, it was the fourth most abundant fish collected during impingement studies, representing 7.81% of fish collected.

3. **Weakfish** – Eggs were not found in the vicinity of the station, which accounts for its low entrainment rate (0.26% of fish collected). However, post-yolk-sac larvae were found in the river from June through August while juveniles were detected from July through December, a period when peak plant cooling water needs occur. Therefore, weakfish constituted the second most abundant fish collected during impingement studies, representing 21.18% of fish collected.

4. **Bluefish** – While this species generally spawns in bay and ocean environments, its larvae and juveniles drift toward estuarine areas. PSE&G found only juveniles near the station, which accounts for its low entrainment rate (0.01% of fish collected). Bluefish constituted the seventh most abundant fish collected during impingement studies, representing 3.1% of fish collected.

5. **Atlantic Tomcod** – An inshore coastal fish which spawns in brackish waters, PSE&G found all stages of life near the station. This species constituted the second most abundant fish collected during entrainment studies, representing 29.87% of fish collected. It represented only 1.65% of fish collected during impingement studies (14th most impinged fish).

6. **Atlantic Menhaden** – This species is known to use large tidal rivers for spawning and nurseries, however PSE&G found no eggs in the vicinity of the station. Therefore entrainment, which might be expected to have a significant impact on this species due to its spawning and nursery proclivities, had relatively no impact on this species (0.13% of fish collected in entrainment studies). This species constituted the tenth most abundant fish collected during impingement studies, representing 2.23% of fish collected.

7. **Bay Anchovy** – PSE&G found all life stages near the station. Eggs were present from May through August while larvae were present from June through December a period when peak plant cooling water needs occur. Bay Anchovy represented both the most abundant fish collected during entrainment studies (64.28% of fish collected) and the most abundant fish collected during impingement studies (27.2% of fish collected).

8. **Atlantic Silversides** – An estuarine species, PSE&G found all life stages near the station. However, it accounted for only 0.26% of fish collected in entrainment studies and 0.6% of fish collected in impingement studies.

The remaining five species, while important species within the Hackensack Meadowlands complex, are unlikely to be impacted significantly via impingement and/or entrainment by the station due to the following factors; seasonal

resident of the river, lack of egg and/or larvae life stage near station, and/or increasing presence of species in river or NY/NJ Harbor complex. These species and their rates of collection in PSE&G's 1996/97 entrainment and impingement studies are:

1. **Striped Bass** – This species is not a full time resident of estuarine rivers and conducts most of its spawning in the New York Bight in the freshwater section of the Hudson River. PSE&G found no eggs in the river and collected no life stages in their entrainment studies. Striped Bass represented the eleventh most impinged fish species (2.06% of fish collected).

2. **Mummichog** – While they prefer estuarine rivers, the mummichog's natural habitat consists of tidal creeks in shallow areas less than twelve feet deep. As the portion of the river near the station consists of a channel anywhere from 40 to 47 feet deep with steep embankments on either shore and the mummichog lives out its life cycle within a home range of only 30-40 meters, this species should not be significantly involved with the station's intake structure. This was confirmed in PSE&G's entrainment and impingement studies where mummichog represented only 0.04% and 0.2% of fish collected respectively.

3. **Gizzard Shad** - This species is not a full time resident of estuarine rivers and conducts most of its spawning in fresh waters. PSE&G found no eggs in the river and collected no life stages in their entrainment studies. Gizzard Shad represented the sixth most impinged fish species (3.35% of fish collected).

4. **Blueback Herring** - This species is not a full time resident of estuarine rivers but does some spawning in brackish waters. PSE&G found eggs in the river during March and April but this species accounted for only 0.04% of fish collected in entrainment studies. Blueback Herring represented the thirteenth most impinged fish species (1.74% of fish collected).

5. **American Shad** - This species is not a full time resident of estuarine rivers but occasionally eggs and larvae are found in brackish waters. PSE&G found no eggs but juvenile and adult life stages near the station. Not collected in entrainment studies, the American Shad represented the thirty-first (31) most impinged fish species (0.11% of fish collected).

Macroinvertebrates

PSE&G chose the following four macroinvertebrates as RIS species for their 1996/97 316(b) study: Grass Shrimp, Opossum Shrimp, Scud, and Blue Crab. Each of these species was selected because of one or more of the following characteristics: relatively high involvement with the intake, a range of sensitivity to entrainment and impingement representative of other members of the local biological community, importance to the food web or overall ecology of the river, importance to commercial or recreational fisheries, or other particular concerns of the regulatory agencies.

Grass Shrimp – Grass shrimp found in the river consist primarily of three species; marsh grass shrimp, daggerblade grass shrimp, and brackish grass shrimp. These species are found in estuaries from Massachusetts to Texas and is a year round resident of the river. All life stages were found near the station during the 1996/97 studies. During the 1986/87 study, grass shrimp were entrained at a peak rate (May – August) of 152 individuals per 1000 cubic meters of withdrawn water, while the 1996/97 study revealed 19,350 individuals per 1000 cubic meters of withdrawn water. From this entrainment information, it appears the grass shrimp population may be increasing in the river. These species accounted for 51.5% of invertebrates impinged at the station during the 1996/97 studies.

Opossum Shrimp – One of the most common mysid shrimps inhabiting estuaries and inshore coastal waters of the northeastern United States, PSE&G found all life stages in the river. During the 1986/87 study, Opossum shrimp were entrained at a peak rate (May – August) of 4,253 individuals per 1000 cubic meters of withdrawn water, while the 1996/97 study revealed 29,247 individuals per 1000 cubic meters of withdrawn water. From this entrainment information, it appears the Opossum shrimp population may be increasing in the river. No individuals were found during impingement studies.

Scud – Scud, belonging to the genus Gammarus, consists of more than a dozen species of small (<25 mm), shrimp like amphipod invertebrates. Scud was found in the river in all months except April. All life stages are expected to occupy the river. During the 1986/87 study, Scud were entrained at a peak rate (May – August) of 327 individuals per 1000 cubic meters of withdrawn water, while the 1996/97 study revealed 1618 individuals per 1000 cubic meters of withdrawn water. From this entrainment information, it appears the Scud population may be increasing in the river. No individuals were found during impingement studies.

Blue Crab – The blue crab is a decapod crustacean occuring in shallow estuarine and marine waters along the Atlantic coast from Massachusetts Bay to Northern Argentina. The U.S. Fish and Wildlife Service has listed the blue crab as a species of special emphasis in the Hackensack Meadowlands and is considered demonstrably secure throughout the New York Bight. During the 1986/87 study, blue crab were impinged at a peak rate (May – August) of 16.77 individuals per 100,000 cubic meters of withdrawn water, while the 1996/97 study revealed 881.9 individuals per 100,000 cubic meters of withdrawn water. However, there were no significant differences between bottom trawl catches from 1986/87 to 1996/97. Therefore, the blue crab population in the river appears to be either stable or increasing. Blue crabs were the second most impinged invertebrate species accounting for 41.57% of impinged species during the 1996/96 studies.

Entrainment and Impingement Impact Assessment

In EPA's February, 2002 proposed Phase II regulations for existing facilities, the agency stressed the need to take into account the entire waterbody when assessing the impact of a single facility. EPA stated:

> In addition to impingement and entrainment losses associated with the operation of the cooling water intake structure, EPA is concerned about the cumulative overall degradation of the aquatic environment as a consequence of (1) multiple intake structures operating in the same watershed or in the same or nearby reaches and (2) intakes located within or adjacent to an impaired waterbody. Historically, impacts related to cooling water intake structures have been evaluated on a facility-by-facility basis. The potential cumulative effects of multiple intakes located within a specific waterbody or along a coastal segment were not typically assessed and thus are largely unknown.
>
> Further, the Agency believes that cooling water intakes potentially contribute additional stress to waters already showing aquatic life impairment from other sources such as industrial discharges and urban stormwater. EPA notes that the top four leading causes of waterbody impairment (siltation, nutrients, bacteria, and metals) affect the aquatic life uses of a waterbody. Thus, the Agency is concerned that many of the aquatic organisms subject to the effects of cooling water withdrawals reside in impaired waterbodies and are therefore potentially more vulnerable to cumulative impacts from an array of physical and chemical anthropogenic stressors. When enough individual aquatic organisms are subject to lethal or function-impairing stressors, whether from cooling water intake structures or water pollutants, the structure of their ecosystem can change significantly in response. Changes in ecosystem structure can then affect all organisms within the ecosystem, including those organisms a cooling water intake structure does not directly impact. Decreased numbers of aquatic organisms can have any or several of the following ecosystem-level effects:
>
> (1) Disruption of food webs.
> (2) Disruption of nutrient, carbon, and energy transfers among the physical and biological ecosystem compartments.
> (3) Alteration of overall aquatic habitat
> (4) Alteration of species composition and overall levels of biodiversity.
>
> Food webs are modified by cooling water intake structure impacts because (1) some species within the ecosystem suffer heavier mortality impacts than others, and (2) cooling water intake structures convert living organisms to various forms of organic matter, thereby removing food resources from consumers of living organisms, and increasing food resources for scavengers and decomposers. Cooling water intake structures can transfer large amounts of nutrients, carbon, and energy from living organisms (in some cases highly mobile or migratory

920980502

organisms) to the physical environment. Nutrients, carbon, and energy may re-enter the biological compartment, but they will do so via different pathways than those used prior to cooling water intake structures operation (see alteration of food webs). In addition to altering the physical nature of aquatic habitat directly (e.g., current modification and water withdrawal), cooling water intake structure may modify habitat by reducing numbers of habitat-modifying organisms. Species may disappear from a site in response to cooling water intake structure impacts. Threatened and endangered or otherwise rare or sensitive species may be at greater risk. New species (including invasive species), may establish themselves within the disrupted area if they are able to withstand cooling water intake structure impacts.

The Hackensack River is an impaired waterbody containing two major cooling water intakes. The PSE&G Kearney Generating Station also uses the same segment of the Hackensack River as the Hudson Generating Station. The Kearney Station generally operates only from June through September with an average intake flow rate of 90.9 MGD and daily maximum intake flow rate of 290 MGD. These water intakes contribute additional stress to waters already showing aquatic life impairment from other sources such as industrial and municipal discharges and urban stormwater. While species diversity has increased from the 1986/87 to 1996/97 studies, the number of fish caught per unit effort for RM 0-5 decreased from the 1986/87 to 1996/97 studies. Therefore, an analysis of alternative intake technologies versus the existing intake technology is necessary.

Intake Technologies Considered

In their November 1998 316(b) Report, PSE&G evaluated twelve intake technologies for use at the station. Information provided by PSE&G and EPA's Technical Support Document as part of their Phase II proposal were used to determine the intake structure which meets the best technology available (BTA) for minimizing adverse environmental impact. The twelve intake technologies evaluated by PSE&G were:

Alternative 1 – No Change to Present Intake or Operations

Units 1 and 2 each have two intake bays and each is equipped with two circulating water pumps and two service water pumps. The circulating water pumps withdraw once-through cooling water (OTCW) from the Hackensack River through a common intake structure. The service water pumps provide auxiliary cooling water for other components. The rated capacity for each of Unit 1's circulating pumps is 135,000 gallons per minute (gpm) and the rated capacity for each of Unit 2's circulating pumps is 175,000 gpm, for a total system capacity of 620,000 gpm. The OTCW is used to condense the steam produced by Units 1 and 2, which causes the temperature of the OTCW to increase as it passes through the Unit's steam condensers and is finally discharged through outfall DSN361.

Each of the intake bays is fitted with a vertical traveling screen, where average through-screen intake water velocities range from 1.3 to 2.9 feet per second, depending on tide height. The traveling screens are rotated and washed on a continuous basis whenever the associated circulating pumps are operating. Material from the screens of both units is washed into a common sluiceway, collected, and removed from the site.

In their Technical Support Document, EPA considers Hudson's existing intake system as a baseline technology by which other intake technologies are compared. This type of intake technology is the most commonly used intake at older existing facilities. In general, this type of intake is designed to prevent debris from entering the cooling water system, not to minimize impingement and entrainment.

Alternative 2 – Combined Fish/Debris Return Trough on Existing Screens and Modification of Existing Intake Curtain Walls

The existing traveling water screens would continue to be used as a physical barrier to fish, with the 0.375-in mesh having sufficient small openings to collect juvenile and adult life stages of many species. The existing debris trough would be extended on each end of the intake structure to return collected fish and invertebrates back to the river.

920980503

This alternative has the lowest cost (besides the 'no change' alternative 1) but also the lowest reduction in aquatic life mortality at the station. One of the primary weaknesses of this alternative versus other fish return alternatives noted below is the use of the high pressure screenwash system to remove fish from the existing screens. EPA, in their Technical Support Document, cited research which stated that one of the key elements to the success of a fish return system was performing fish removal *prior* to high-pressure wash for debris removal. In Alternative 3, PSE&G proposed a fish return system that meets the criteria of fish removal prior to high-pressure wash for debris removal.

As Alternative 2 does not meet an important component of fish return systems, the Department has determined that this alternative does not meet BTA.

Alternative 3 – New Coarse Mesh Ristroph Screens and Modification of Existing Intake Curtain Walls

The existing screens would be replaced with Ristroph screens, having a dual nozzle wash system (high and low pressure) and separate fish and debris collection troughs that would merge at each end of the intake structure for common return to the river. The screens would have fish lifting buckets to hold the fish in water as they are lifted to the low-pressure spraywash removal system. The existing curtain walls would be removed and a new trash rack would be installed to improve the flow distribution through the screens.

Modified screens and fish handling and return systems have been used to minimize impingement mortality at a wide range of facilities nationwide. Among the examples EPA highlighted in their Technical Support Document are:

- Dominion Power's Surry Station (Virginia) reported a 93.8% survival rate of all fish impinged (83% for Bay anchovy) with their Ristroph screens and fish return system.

- In the 1970s, a fish pump and return system was added to the traveling screens at the Monroe Power Plant in Michigan. Initial studies showed 70 to 80 percent survival for adult and young-of-year gizzard shad and yellow perch.

- The Kintigh Generating Station in New York has modified traveling screens with low pressure sprays and a fish return system. After enhancements in 1989, survivals of generally greater than 80 percent have been observed for rainbow smelt, rock bass, spottail shiner, white bass, white perch, and yellow perch. Gizzard shad survivals have been 54 to 65 percent.

- At the Arthur Kill Station in New York, 2 of 8 screens are modified Ristroph type; the remaining six screens are conventional type. The modified screens have fish return collection troughs, low pressure spray washes, fish flap seals, and separate fish collection sluices. 24-hour survival for the unmodified screens averages 15 percent, while the two modified screens have 79 percent and 92 percent average survival rates, respectively.

Based on their extensive data regarding this intake technology, EPA reported that, "...the above results generally show that at least 70-80 percent reductions in impingement can be achieved over conventional traveling screens."

Alternative 4 – New Flush Mounted Coarse Ristroph Screens

The existing screens would be removed and the intake structure would be modified for installation of new Ristoph screens identical to those described for Alternative 3. The existing intake would be used to provide flow to the Unit 2 pumps. A new intake with Ristroph screens would be constructed on the north side of the existing intake to provide flow to the Unit 1 pumps. The new Ristroph screens would have dual nozzle wash systems and separate fish and debris return troughs on each end of the intake structure. The Ristroph screens would have lifting buckets to hold the fish in water as they are lifted to the low-pressure spraywashing removal system.

This alternative would require extensive modification of the existing intake structure. Construction and installation would take approximately two years, as opposed to a shorter time period for Alternative 3. Cost of the project is

estimated to be 21.7 millions dollars, nearly three times the cost of Alternative 3 (7.5 million dollars). Therefore, although the projected reduction of aquatic losses at the station is slightly better than Alternative 3, its projected cost/benefit ratio is almost three times higher than Alternative 3.

Alternative 5 – New Flush Mounted Fine Mesh Ristroph Screens

This alternative would be identical to Alternative 4 with the exception of the screen mesh size, which would be decreased to 0.5 mm in order to ensure collection of earlier life stages of fish and invertebrates.

While the data regarding this intake technology shows promise for reducing impingement and entrainment, full scale performance data for fine mesh screens at large power plants are generally not available. Biofouling and clogging are major concerns due to the small screen size and characteristics of the river. The construction cost of this alternative is similar to Alternative 4 and greater than all other alternatives except for Alternative 12. Based on the difficulties of using this system for such a large discharger (>800 MGD) and its high cost versus other intake technologies, the Department has determined that this intake is not BTA.

Alternative 6 – Dual Flow Screens

The existing screens would be removed and the intake structure would be modified for installation of new dual-flow screens to service Unit 2. A new intake with dual-flow screens would be constructed on the north side of the existing intake to service Unit 1. The new screens would have dual nozzle wash systems and separate fish and debris return troughs on each side of the intake structure. The dual-flow screens would have lifting buckets to contain fish in water as they are lifted to the low-pressure spraywash system. The screens could have either coarse mesh (0.25-in by 0.50-in) or fine mesh (0.02-in by 0.02-in) that would exclude juvenile and adult life stages of most species.

This alternative would require extensive modification of the existing intake structure. In addition, the cost for this alternative is approximately 2.5 times greater than Alternative 3 (19 millions dollars vs 7.5 million dollars), while the limited data regarding Alternative 6 shows impingement performance below that of Alternative 3. Therefore, the Department does not consider this intake technology to be BTA.

Alternative 7 – Submerged, Cylindrical Wedge Wire Screen Intakes

The existing intake would be modified to provide a plenum that would extend to the north side of the intake. Sheetpile would be used to form the plenum, with the cylindrical screens connected to the plenum via steel pipes. The screens would be designed for a through-screen velocity <0.5 ft/sec. Two mm is the smallest slot size that practicably can be used to achieve this velocity without causing the screen system to extend into the river and interfere with shipping. The cylindrical screens would have an air-burst cleaning system.

While the limited data regarding this intake technology shows promise for reducing impingement and entrainment, it has not been used at power plant with flows greater than 100 MGD. Biofouling and clogging are major concerns due to the small screen size and characteristics of the river. The construction cost of this alternative is more than double the construction cost of Alternatives 2,3, 9, 10, and 11. Based on the difficulties of using this system for such a large discharger (>800 MGD) and its high cost versus other intake technologies, the Department has determined that this intake is not BTA.

Alternative 8 – Modular Inclined Screens

The existing intake would be modified to provide a new intake canal on the north side of the existing intake, where two Modular Inclined Screens would be installed. Sheetpile would be used to form the intake canal, with the screen modules constructed from concrete. The approach area for each screen would be 12 feet wide by 12 feet high. The screens would be 2 mm profile bars with 2 mm clear openings designed for a maximum velocity of 5 ft/sec approaching the screens. The screens would have a 15 degree angle off horizontal and would be about 40 feet long. The normal velocity component at the wedge-wire face would be about 1.3 ft/sec. The screens would be rotated for

cleaning of debris that passed through the coarse trash rack on the upstream opening to each screen module. The existing screens would be maintained to collect backwashed debris. A fish bypass and return system would be located at the downstream end of each screen. A fish pump would be installed in each bypass line to induce bypass flows and return fish to the river.

Implementation of this alternative would involve shoreline excavation, dredging of the river bottom and disposal of dredge spoil. In addition, the cost for this alternative is approximately 47% greater than Alternative 3 (11 million dollars vs 7.5 million dollars). This alternative has not been used at an operating facility and therefore there is no impingement/entrainment data associated with it. PSE&G used data from tests conducted at Alden Research Laboratory and Green Island MIS Test Facility to indicate improved reduction in fish losses but lower reduction in blue crab and grass shrimp losses when compared to Alternative 3. Based on its cost, the inconclusive data and the need to conduct dredging and shoreline excavation, the Department does not consider this intake technology to be BTA.

Alternative 9 – Strobe Light/Air Bubble Curtain System

The strobe light/air bubble curtain concept is a hybrid behavioral barrier system. The system components would include strobe lights and an air bubble curtain installed in the opening below the ice/debris barrier at the upstream end of the existing circulating water intake screenwell. The air piping would be mounted on support piles driven into the river bottom. The light spacing would be on a horizontal and vertical grid at about 10-foot intervals. An air bubble system would be installed along the bottom and at mid-depth of the opening below the ice/debris barrier.

PSE&G's concerns with this system are: 1) the effect of turbidity on the propagation of light, and 2) the limited nature of the information available to indicate whether species in the area would respond to this system. EPA shares the same concerns in their review of behavioral systems in general. After reviewing numerous studies of behavioral devices to control impingement and entrainment, EPA concluded that, "For the most part, these studies have either been inconclusive or shown no tangible reduction in impingement and entrainment." Due to the difficulties that the river's turbidity would have on the effectiveness of the system and the lack of evidence as to its effectiveness regarding the species of concern at the station, the Department concludes that this system is not BTA.

Alternative 10 – Sound Deterrent System

PSE&G reports that preliminary study results at other sites indicate that some of the species that are present in the vicinity of the river would react to sound in the 100 Hz to 5 kHz range. The sound transducers would be installed in the opening below the ice/debris barrier at the upstream end of the existing circulating water intake screenwell. The sound transducers would be installed at two levels on both sides and in the center of the ice/debris barrier opening to provide a uniform barrier across the entire intake area. The center transducers will be mounted on existing sheet pile cells driven into the river bottom.

After reviewing numerous studies of behavioral devices to control impingement and entrainment, EPA concluded that, "For the most part, these studies have either been inconclusive or shown no tangible reduction in impingement and entrainment." Furthermore, the Arthur Kill Station's pilot- and full-scale, high frequency sound tests showed no observable deterrence for bay anchovy, the most impinged and entrained species of fish at the Hudson Station. Therefore, the Department concludes that this system is not BTA.

Alternative 11 – Variable Speed Pumps

The existing circulating water pump motors would be replaced with new variable speed motors to allow operation at reduced flow during periods of high impingement and/or entrainment. A 50% reduction in pumping capacity would reduce entrainment and lower the velocity at the screens to about 1.2 ft/sec for Unit 1 and about 1.5 ft/sec for Unit 2, thereby reducing fish impingement.

The number of organisms entrained would be reduced in proportion to the flow reduction achieved by operation of the variable speed pumps. Impingement would be reduced anywhere from 0 to 50%, in direct proportion to the amount of flow reduction as a result of reduced velocities into the exit screens. PSE&G's projections of fish and invertebrate loss reductions are better for some species than its projections for Alternative 3. However, the system has two significant drawbacks:

1. Reduction in cooling water flow by as much as 50% would result in a directly proportional increase in the temperature of the cooling water discharged back to the river via outfall DSN361. It is not known what impacts this reduced discharge at a significantly higher temperature would have on the river.

2. Reduction in cooling water flow would necessitate a decrease in the capacity of the station. This loss in revenue, coupled with the construction and operation costs, make this alternative the second most expensive alternative other than retrofit of a closed-cycle system. The estimated total cost of this alternative (114.8 million dollars) is over fifteen times greater than Alternative 3. This cost is similar to the cost for retrofitting natural draft (121.6 million dollars) and/or mechanical draft cooling towers (119.5 million dollars), which would provide greater reductions in impingement and entrainment losses at the station than this alternative.

Due to the unknown impact of the modified thermal discharge and the potential for greater losses when compared to Alternative 12 (Closed Cycle Cooling System), the Department has determined that this intake technology is not BTA.

Alternative 12 – Closed Cycle Cooling System

Because closed cycle cooling systems reduce intake flows by over 97.5%, they provide the greatest reduction in impingement and entrainment losses for the Hudson Generating Station. These alternatives use a variety of methods to reject the waste heat of the operating units to the atmosphere rather than to the river. However, they are also the costliest alternative (119.5 million dollars to 170.3 million dollars).

PSE&G looked at three types of closed cycle systems, natural draft, mechanical draft, and wet/dry cooling towers.

Natural draft wet cooling towers reject waste heat by the evaporation of a small percentage of the heated cooling water into an airflow induced by a large, tall hyperbolic tower. The remaining cooled water is recycled through the condenser. The tower utilizes air density differentials between the ambient atmosphere and the air inside the tower to generate the required cooling air flow. This closed cycle system reduces the intake water quantity to approximately 2.5% of its existing, once-through quantity thus aquatic intake effects are proportionally reduced.

This alternative involves retrofitting a closed-cycle cooling system with one hyperbolic natural draft cooling tower per unit. The towers would be located on both sides of Penhorn Creek just east of Little Snake Hill. The natural draft cooling tower for Unit 1 would be designed for 120,000 gpm and would be approximately 330 feet high and 224 feet in diameter. The natural draft cooling tower for Unit 2 would be designed for 180,000 gpm and would be approximately 374 feet high and 267 feet in diameter.

Mechanical draft wet cooling towers reject heat by the evaporation of a small percentage of heated discharge water within each cell into an airflow induced by the large fan that serves that cell. This closed cycle system reduces the intake water quantity to less than 2.5% of its existing, once-through quantity thus aquatic intake effects are proportionally reduced.

This alternative involves retrofitting a closed-cycle cooling system with one mechanical draft cooling tower per unit. Each tower structure would be comprised of back-to-back counterflow cooling tower cells. The towers would be located on both sides of Penhorn Creek just east of Little Snake Hill. The mechanical draft cooling tower for Unit 1 would be designed for 240,000 gpm; the tower structure would be approximately 500 feet long, 84 feet wide and 40 feet high. It would be composed of 24 back-to-back cells, each served by a 28 foot diameter fan. The mechanical draft cooling tower for Unit 2 would be designed for 360,000 gpm; the tower structure would be approximately 750

feet long, 84 feet wide and 40 feet high. It would be composed of 36 back-to-back cells, each served by a 28 foot diameter fan.

Wet/dry cooling towers are hybrid designs very similar in geometry to mechanical draft towers. They reject waste heat by combining the evaporation of a small percentage of the heated discharge water with the simultaneous sensible (dry) cooling resulting from finned tube bundles. A common airflow through the dry and wet sections is induced by a large fan that serves each cell. The separate moist and dry, warm air streams mix before exiting at the fan stack, thereby reducing the visibility of the cooling tower plume that is exhausted. The remaining cooled water is recycled through the condenser. The design objective of this cooling technology is to minimize plume size. This closed cycle system reduces the intake water quantity to about 2.5% of its existing, once-through quantity, thus aquatic intake effects are proportionally reduced.

This alternative involves retrofitting a closed-cycle cooling system with one wet/dry cooling tower per unit. Each tower structure would be comprised of back-to-back counterflow cooling tower cells. The towers would be located on both sides of Penhorn Creek just east of Little Snake Hill. The wet/dry cooling tower for Unit 1 would be designed for 240,000 gpm; the tower structure would be approximately 500 feet long, 84 feet wide and 60 feet high. It would be composed of 24 back-to-back cells, each served by a 32 foot diameter fan. The wet/dry cooling tower for Unit 2 would be designed for 360,000 gpm; the tower structure would be approximately 750 feet long, 84 feet wide and 60 feet high. It would be composed of 36 back-to-back cells, each served by a 32 foot diameter fan.

While closed-cycle cooling systems would provide the greatest reductions in impingement and entrainment mortality at the station, the following drawbacks with these technologies are:

1. The closed-cycle systems create a reduction in the net generation of the Station. Significant hydraulic power is necessary to pump the circulating water to and through the alternative cooling device, while large amount of energy (except for natural draft towers) are required to convey the necessary air through the alternate equipment. This loss, projected to be from 42 MW for natural draft towers to 20 MW for wet cooling towers, would require extra fossil fuel to be burned, which would have a direct impact on air quality.

2. All three closed-cycle alternatives would produce vapor plumes. Plumes can create problems for fogging and icing, which have been recorded to create dangerous conditions for local roads and for air and water navigation. Generally, mechanical draft and wet/dry towers have significantly shorter plumes than those for natural draft towers. It is unknown what effects these vapor plumes might have on Newark Airport, which is approximately 6 miles southwest of the proposed location of the closed-cycle systems. Another concern is that the location of the closed-cycle systems is less than a ½ mile (approximately 2200 feet) from the N.J. Turnpike, one of the most heavily traveled highways in the United States.

3. The total cost for these three closed-cycle cooling systems are the most expensive alternatives due to the large construction cost, operation and maintenance costs, and the cost of the replacement power requirements during construction and operation of the systems. The total costs are; natural draft cooling towers – 121.6 million dollars, mechanical draft cooling towers – 119.5 million dollars, and the wet/dry cooling towers - 170.3 million dollars. In determining a cost/benefit analysis for each intake technology, PSE&G assumed that all fish saved would be caught either commercially or recreationally and multiplied by their commercial price per pound. Using this methodology, PSE&G calculated cost/benefit ratios for each intake technology. The cost/benefit ratio of mechanical draft cooling towers of 60.8 was significantly higher than the cost/benefit ratio of every other intake technology except Alternative 11. Clearly, the lower the cost benefit ratio, the more desirable the intake technology (maximizing benefit while minimizing cost). For example the cost benefit ratio of Alternative 3 was 4.9.

4. With respect to natural draft cooling towers, the size of the two cooling towers would make them the largest structures in the area. In the early 1970s, human activity was estimated to be responsible for the death of approximately 196 million birds/year. Hunting was the largest direct mortality factor, accounting for approximately 61% of human-related bird deaths. Collision with human-made objects was the greatest indirect

human cause of avian deaths, accounting for approximately 32% of human-related avian deaths. These towers would be within one mile of the Sawmill Wildlife Management Area, which supports significant numbers of migrating and overwintering waterfowl, especially northern pintail (*Anas acuta*) and canvasback, and shorebirds at low tide. In addition to this area, the towers would be within three miles of Kearney Marsh, which the New York/NJ Harbor Estuary Program describes as:

> **Kearny Marsh** recently supported several significant waterbird breeding populations including the largest breeding population of pied-billed grebes in New Jersey, the largest American coot breeding site in the state with an estimated 1,600 adult coot during 1978, and a large breeding population of least bittern with more than 35 adults in the 1970s and 1980s. Increased flooding and salinity in recent years has increased the amount of open water, reduced some of the food plants such as duckweed, and changed the avian species composition in this area. Common moorhen is now a common nesting species in the marsh. Kearny Marsh still supports a black-crowned night-heron heronry as well as roosting and feeding by herons, egrets, and ibises, especially during post-breeding dispersal periods in mid to late summer. Many of these birds likely come from the Harbor Herons Complex 13 kilometers (8 miles) to the south, and possibly from North and South Brother Islands 19 kilometers (12 miles) to the east. The eastern part of Kearny Marsh (east of the New Jersey Turnpike) is heavily used as a feeding area by double-crested cormorant (*Phalacrocorax auritus*), herons, gulls, least tern, black skimmer, coots, moorhens, and pied-billed grebe, with nesting by coots, moorhens, grebes, mallard, gadwall, and marsh wren (*Cistothorus palustris*).

5. All three types of closed cycle systems eliminate acres of terrestrial habitat and open space around Penhorn Creek. The location of these designs is also problematic. The NY/NJ Harbor Estuary Program has targeted the area around Penhorn Creek as an acquisition priority site for wetland and tidal creek preservation and possible restoration.

Based upon these five drawbacks in terms of cost, increased fossil fuel burned, potential impact on important bird habitat, navigation hazards, and local land use difficulties, the Department has determined that the closed-cycle systems are not BTA.

PSE&G's Proposal

The Department is requiring that PSE&G modify the existing traveling screens with new coarse mesh Ristroph screens (Alternative 3). This alternative would include modifying the existing curtain wall to reduce intake velocities and installing a low pressure and high pressure wash system with separate fish/invertebrate and debris return troughs. PSE&G predicts blue crab equivalent adult losses would be reduced by 90%. It is expected to that there would be benefits to finfish species as well.

This technology is a proven technology used by large (>100 MGD) facilities which use estuarine waters and has one of the smallest cost/benefit ratios. PSE&G estimates that this intake technology can be installed within a relatively short time period compared to the other alternatives. To determine actual impingement/entrainment improvements by this intake modification, the permittee shall conduct 316(b) studies 2.5 years from the effective date of this permit (EDP) so that the results can be reported with the renewal application at EDP + 4.5 years. The requirement(s) to perform a 316(b) study has been included in this permit pursuant to N.J.A.C. 7:14A-2.12(b) and N.J.A.C. 7:14A-13.21(e)3.

Section 316(a) of the Clean Water Act

With respect to thermal discharges, Section 316(a) of the Clean Water Act includes:

> With respect to any point source otherwise subject to the provisions of Section 301 or Section 306 of this Act, whenever the owner or operator of any such source, after opportunity for public hearing, can demonstrate to the satisfaction of the Administrator (or, if appropriate, the State) that any effluent limitation proposed for the control of the thermal component of any discharge from such source will require effluent limitations more stringent than

necessary to assure the projection and propagation of a balanced, indigenous population of shellfish, fish and wildlife in and on the body of water into which the discharge is to be made, the Administrator (or, if appropriate, the State) may impose an effluent limitation under such sections for such plant, with respect to the thermal component of such discharge (taking into account the interaction of such thermal component with other pollutants), that will assure the protection and propagation of a balanced, indigenous population of shellfish, fish, and wildlife in and on that body of water.

Thermal discharges can have two significant effects on the indigenous population of shellfish, fish, and other wildlife. First, by introducing heated water into aquatic ecosystems a potential pressure on the state of the environment may occur because changing the temperature of water can affect aquatic ecosystem functioning, for example through the survival or reproductive success of a sensitive native plant or animal. Second, thermal shock can occur when marine life becomes accustomed to a thermal discharge and are adversely impacted when a sharp change in water temperature takes place when plants shut down for repair (cold shock).

The station's cooling water discharge (CWD) increases water temperatures in the river. The CWD is returned to the river through a common discharge canal via outfall DSN361. The discharge canal is 1400 feet long and meets the river adjacent to the mouth of Penhorn Creek upriver of the station's intake structure, which is located at approximately RM 3.2 (effluent from the discharge canal enters the river at RM 3.6). The spatial distribution of the water temperature increases defines the thermal plume. The size and characteristics of the thermal plume are dependent on the thermal characteristics of the CWD, the station's net generation over several days, the hydrodynamics of the river and meteorological conditions.

The hydrodynamics of the river are dominated by the tides, which propagate into Newark Bay through the Arthur Kill and Kill Van Kull. Tides in the Newark Bay Complex are semi-diurnal, with two high waters and two low waters per day. These tides create distinct mixing zone dynamics with the cooling water discharge thus producing thermal plumes occupying different portions of the river. Inflows to the river include releases from Oradell Dam, flows from tributaries below Oradell Dam and anthropogenic sources. Anthropogenic sources include three municipal treatment plants, combined sewer overflows, and industrial facilities. The largest municipal facility is the Bergen County Utilities Authority which discharges approximately 70-100 MGD upstream of the plant.

The New Jersey Surface Water Quality Standards (NJSWQS) for temperature in the Hackensack River include:

No thermal alterations, as measured outside of heat dissipation areas, which would cause temperatures to deviate from ambient by more than 2.2 °C (4 °F), from September through May, nor more than 0.8 °C (1.5 °F) from June through August, nor cause temperatures to exceed 29.4 °C (85 °F).

The heat dissipation area is defined as:

(1) Not more than one-quarter (1/4) of the cross section and/or volume of the water body at any time;
(2) Not more than two-thirds (2/3) of the surface from shore to shore at any time; and
(3) These limits may be exceeded by special permission, on a case-by-case basis, when a discharger can demonstrate that a larger heat dissipation area meets the tests for a waiver under Section 316 of the Federal Clean Water Act.

PSE&G's computer models of the thermal plume revealed instances when more than one-quarter (1/4) of the cross sectional area of the river deviates from the ambient at 4 °F or greater and instances during the summer months (June through August) when the river deviates more than 1.5 °F. There are also instances when the temperature at the edge of the heat dissipation areas could exceed 85 °F. Therefore, as the permittee's discharge violates the NJSWQS with respect to thermal alterations as measured outside of the heat dissipation areas, more stringent temperature/thermal limits shall be proposed unless part (3) is satisfied. In other words, the existing temperature/thermal limits shall be retained from the existing permit if the Department finds that the thermal component of this discharge assures the protection and propagation of a balanced, indigenous population of shellfish, fish, and wildlife in and on the Hackensack River.

The Department finds that the existing thermal component of the facility's discharge complies with Section 316(a) of the Clean Water Act based on the following:

1. There have been no recorded instances of cold shock in the vicinity of the facility. Those species most likely to be affected by cold shock are not normally winter residents of the river.

2. Field studies conducted from 1972 to 1997 shows an improved river ecosystem which is becoming more balanced. The 1972 studies showed a river dominated by the mummichog, a pollutant and heat resistant fish. Of the fish collected during the 1972/73 study, 78% were mummichog. By the 1996/97 study, mummichog accounted for less than 1% of collected species. This reduction in mummichog as a percent of the fish community in the vicinity of the Hudson Generating Station is in accordance with the mummichog's natural habitat, which consists of tidal creeks in shallow areas less than twelve feet deep. As the portion of the river near the station consists of a channel anywhere from 40 to 47 feet deep with steep embankments on either shore and the mummichog lives out its life cycle within a home range of only 30-40 meters, this species should not represent a significant percentage of the marine life in this section of the river. There is not only an increase in the number of species detected but an increase in the diversity of life stages (egg, larvae, juvenile, adult) for the various species. Therefore, while the facility has been consistently operating, a more balanced and indigenous marine population has appeared in the river during the past three decades.

3. During the 1996/1997 study, the number of fish caught per bottom trawl was greater in the vicinity of the station during June, July, and August as compared to upstream (RM 10). Since this is the time when the ambient temperatures of the river are highest and the thermal load from the facility is greatest, one would expect the greatest thermal impact on the river. However, there was far greater fish abundance between RM 2 – 4 than at RM 10 during this time period.

4. Macroinvertebrates are good indicators of localized conditions of water quality due to their limited mobility. As such, they are well suited for the assessment of site specific pollution impacts such as thermal pollution. PSE&G studied the thermal impact on four macroinvertebrates, blue crab, grass shrimp, opossum shrimp, and polychaete worm. Data collected by PSE&G shows an improvement in this community between 1972 to 1997, especially in the lower regions of the river nearest the station (RMs 0-2 and RMs 3-4.5). The number of macroinvertebrate species has increased as well as the percentage of pollution sensitive species during the past three decades. PSE&G theorizes that this improvement is due to increased concentrations of dissolved oxygen in the river. As recently as 1988, DO concentrations as low as 0.1 mg/l were reported whereas the lowest value reported during the 1996-97 studies was 1.9 mg/l at RM 10. The lowest value reported in the vicinity of the station (RMs 2-4) was 3.5 mg/l. The macroinvertebrate community in the vicinity of the thermal discharge was healthier than upstream (RM 10) of the discharge, probably due to the lower DO concentrations and proximity to major point source dischargers upstream of the discharge.

5. For microinvertebrates, PSE&G, based on existing laboratory studies of thermal inhibition of individual species, estimated that at the high end of the ambient river temperature (79.5 °F – maximum average weekly temperature that occurs on average once every two years) and at a maximum delta T for cooling water of 22°F, less than 1 percent of the river bottom in the vicinity of the station would exceed the optimal temperature for larvae growth. During the period of July, 2000 to November, 2002, the highest reported delta T was 15.3 °F while the average daily maximum delta T for that period was 9.3 °F.

6. The thermal plume is not expected to have an impact on development and growth of adult and juvenile fish species as exposure to the plume should not last several days due to the mobility of the species and the variable nature of the plume due to its interaction with the river's tides. The tides generally force the plume to occupy the east shore of the river either north or south of the station depending on flood or ebb tide conditions. At least 73% of the cross sectional area of the river in the vicinity of the station is available for passage (not above an individual species' avoidance temperature) except for Atlantic Tomcod. However, these avoidance temperatures are expected in the warmest periods of summer whereas the Tomcod spawning is expected from November through

920980511

February. This is assuming a delta T of the cooling water discharge (effluent temperature minus influent temperature) of 22 °F. Of the fish species that use the river throughout the year:

- The **bay anchovy** occurs throughout the Bay and is widely tolerant of salinity and temperature. Spawning typically occurs in estuaries where water temperatures are at least 12C (54 F) and salinities greater than 10 PPT. Oxygen levels below 3.0 mgl-1 can be lethal to eggs and larvae and DO below 2.0 mg/1 is critical. PSE&G estimates that at the high end of the ambient river temperature (79.5 °F), less than 1 percent of the river volume in the vicinity of the station would exceed the optimal temperature for larvae growth. Greatest potential for heat shock to eggs would occur in the rare scenario where eggs enter the thermal plume near the end of the discharge canal, at about the time of low slack water, when delta T of the cooling water is 22 °F.

- The **silverside** is a common subject for scientific research because it is sensitive to extreme environmental conditions such as low oxygen levels, drastic temperature changes, and contaminants in the water. PSE&G estimates that at the high end of the ambient river temperature (79.5 °F), less than 1 percent of the river volume in the vicinity of the station would exceed the optimal temperature for larvae growth.

- The **mummichog** is a heat tolerant species whose egg and larvae stages usually inhabit shallow water of the intertidal zone or in surrounding marshes and tributaries. These waters are warmer than the section of the river in the vicinity of the station which is a deep channel (approximately 45 feet) with steep sloping shorelines. PSE&G estimates that at the high end of the ambient river temperature (79.5 °F), less than 1 percent of the river volume in the vicinity of the station would exceed the optimal temperature for larvae and early juvenile growth.

- The effect of heat shock on the **winter flounder** was evaluated using an upper lethal temperature of 59 °F for its eggs. As the eggs are adhesive to the river bottom, thermal impact was estimated in terms of the amount of river bottom that would be exposed to temperatures in excess of 59 °F during the time period when eggs might be present in the river (January – March). Even during an abnormally warm ambient temperature (1 in 10 year high) and a delta T of the cooling water of 22 °F, less than 1 percent of the river bottom in the vicinity of the station would exceed the upper lethal temperature.

- For the remaining fish species (**Atlantic Menhaden, Striped Bass, Bluefish, American Shad, and Blueback Herring**) are not full-time residents and, with the exception of Atlantic Tomcod and Blueback Herring, are not expected to have eggs within the vicinity of the station. Avoidance temperatures in the river are expected to occupy less than 1 percent of the river volume in the vicinity of the station (RM2 – RM4) for these species. The greatest potential for heat shock to eggs and/or larvae would occur in the rare scenario where they enter the thermal plume near the end of the discharge canal, at about the time of low slack water, when delta T of the cooling water is 22 °F. As noted above, this delta T scenario has not occurred in the past 2.5 years.

As the permittee's 1998 316(a) Study demonstrates that the existing effluent limitations are protective of a balanced and indigenous population of aquatic life, the Department shall grant a 316(a) variance from effluent limitations that would otherwise be imposed to meet water quality standards. Therefore, the Department is proposing to impose the existing thermal and temperature limitations for outfall DSN361 in the renewal permit in accordance with the antibacksliding provisions as cited in N.J.A.C. 7:14A-13.19, the New Jersey Surface Water Quality Standards (NJSWQS) for temperature and heat dissipation areas, and Section 316(a) of the Clean Water Act. As the thermal and temperature limitations shall be continued from the previous permit, the amount of heat discharged from the station is not expected to increase over the next five years, and the hydrodynamics of the receiving waterbody are not expected to change appreciably, the permittee is not presently required to conduct a 316(a) Study as part of this renewal permit action. However, in accordance with N.J.A.C. 7:14A-16.4, the permittee is required to notify the Department of any changes to its discharges, including any additional heat or temperature loadings, that may occur as a result of changes to the Station's operations. This notification shall be made in writing so that the Department can make a determination as to whether any Section 316(a) variance granted by the Department is still appropriate. The Department reserves the right to request additional thermal modeling data and/or a modified biothermal assessment.

8 Variances or Alternatives to Permit Conditions:

Not Applicable

9 Procedure for requesting variances or alternatives to water quality based effluent limitations:

Procedures for modifying a water quality based effluent limitation are found in the New Jersey Surface Water Quality Standards, N.J.A.C. 7:9B-1.8 and 1.9. If a water quality based effluent limitation has been proposed in this permit action, the permittee may request a modification of that limitation in accordance with N.J.A.C. 7:14A-11.7(a). This request must be made prior to the close of the public comment period. The information that must be submitted to support the request may be obtained from the Division of Watershed Management at (609) 633-7020.

10 Description of Procedures for Reaching a Final Decision on the Draft Action:

Please refer to the procedures described in the public notice that is part of the draft permit. The public notice for these actions are published in the Jersey Journal and in the DEP Bulletin.

11 Contact Information

If you have any questions regarding this permit action, please contact Jeff Thein, Bureau of Point Source Permitting – Region 1 at (609) 633-3869.

12 Permit Summary Table DSN361A

Unless otherwise noted all effluent limitations are expressed as maximums. Dashes (--) indicate there is no effluent data, no limitations, or no monitoring for this parameter depending on the column in which it appears.

PARAMETER	UNITS	AVERAGING PERIOD	WASTEWATER DATA 1/01 to 11/02	APPLICATION DATA 8/94	EXISTING LIMITS	FINAL LIMITS
Flow	MGD	Monthly Avg Daily Max	476.1 688.4	579.2 848.1	(1) (1)	(1) (1)
Heat – Net	MBtu/hr	Monthly Avg Daily Max	1704 3027	-- --	(1) 4360	(1) 4360
Chlorine Produced Oxidants	mg/L	Monthly Avg Daily Max	<0.1 <0.1	<0.1 <0.1	(1) 0.2	(1) 0.2
Temperature – Difference	°C (°F)	Monthly Avg Daily Max	5.2 8.7	-- --	(1) 20.3 (36.5)	(1) 20.3 (36.5)
Influent Temperature	°C (°F)	Monthly Avg Daily Max	16.9 19.7	-- --	(1) (1)	(1) (1)
Effluent Temperature	°C (°F)	Monthly Avg Daily Max	22.1 26.9	25.6 27.6	(1) 41.1 (106)	(1) 41.1 (106)
Effluent pH	su	Instant Min Instant Max	6.6 8.3	7.5 8.1	6.5 (2) 8.5 (2)	6.5 (2) 8.5 (2)
Influent pH	su	Instant Min Instant Max	6.7 8.4	-- --	(1) (1)	(1) (1)

(1) Monitor and report only
(2) When influent pH is less than 6.5, the effluent minimum limit shall be the influent pH; when the influent pH is greater than 8.5, the effluent maximum limit shall be the influent pH.

920980513

12 **Permit Summary Table DSN363A**

Unless otherwise noted all effluent limitations are expressed as maximums. Dashes (--) indicate there is no effluent data, no limitations, or no monitoring for this parameter depending on the column in which it appears.

PARAMETER	UNITS	AVERAGING PERIOD	WASTEWATER DATA 1/01 to 11/02	APPLICATION DATA 8/94	EXISTING LIMITS	FINAL LIMITS
Flow	MGD	Monthly Avg Daily Max	0.086 0.086	0.611 9.194	(1) ** (1)	(1) (1)
Temperature – Difference	°C (°F)	Monthly Avg Daily Max	2.7 2.7	-- --	(1) (1)	(1) (1)
Influent Temperature	°C (°F)	Monthly Avg Daily Max	24.2 24.2	-- --	(1) (1)	(1) (1)
Effluent Temperature	°C (°F)	Monthly Avg Daily Max	27 27	27.9 29.3	(1) 41.1 (106)	(1) 41.1 (106)
Effluent pH	su	Instant Min Instant Max	7.0 8.4	8 8	6.5 (2) 8.5 (2)	6.5 (2) 8.5 (2)
Influent pH	su	Instant Min Instant Max	7.0 7.7	-- --	(1) (1)	(1) (1)

(1) Monitor and report only
(2) When influent pH is less than 6.5, the effluent minimum limit shall be the influent pH; when the influent pH is greater than 8.5, the effluent maximum limit shall be the influent pH.

12 **Permit Summary Table DSN364A**

Unless otherwise noted all effluent limitations are expressed as maximums. Dashes (--) indicate there is no effluent data, no limitations, or no monitoring for this parameter depending on the column in which it appears.

PARAMETER	UNITS	AVERAGING PERIOD	WASTEWATER DATA * 1/01 to 11/02	EXISTING LIMITS	FINAL LIMITS
Flow	MGD	Monthly Avg Daily Max	-- --	(1) (1)	(1) (1)
Chlorine Produced Oxidants	mg/L	Monthly Avg Daily Max	-- --	(1) 0.2	(1) 0.2
Temperature – Difference	°F (°C)	Monthly Avg Daily Max	-- --	(1) (1)	(1) (1)
Influent Temperature	°F (°C)	Monthly Avg Daily Max	-- --	(1) (1)	(1) (1)
Effluent Temperature	°F (°C)	Monthly Avg Daily Max	-- --	(1) 106 (41.1)	(1) 106 (41.1)
Effluent pH	su	Instant Min Instant Max	-- --	6.5 (2) 8.5 (2)	6.5 (2) 8.5 (2)
Influent pH	su	Instant Min Instant Max	-- --	(1) (1)	(1) (1)

* - No discharge reported since 12/97.
(1) Monitor and report only
(2) When influent pH is less than 6.5, the effluent minimum limit shall be the influent pH; when the influent pH is greater than 8.5, the effluent maximum limit shall be the influent pH.

920980514

12 Permit Summary Table DSN365A

Unless otherwise noted all effluent limitations are expressed as maximums. Dashes (--) indicate there is no effluent data, no limitations, or no monitoring for this parameter depending on the column in which it appears.

PARAMETER	UNITS	AVERAGING PERIOD	WASTEWATER DATA 1/01 to 11/02	APPLICATION DATA 8/94	EXISTING LIMITS	FINAL LIMITS
Flow	MGD	Monthly Avg Daily Max	5.4 5.4	8.857 27.33	(1) (1)	(1) (1)
Chlorine Produced Oxidants	mg/L	Monthly Avg Daily Max	<0.1 <0.1	-- --	(1) 0.2	(1) 0.2
Temperature – Difference	°C (°F)	Monthly Avg Daily Max	0.9 0.9	-- --	(1) (1)	(1) (1)
Influent Temperature	°C (°F)	Monthly Avg Daily Max	16.3 16.3	-- --	(1) (1)	(1) (1)
Effluent Temperature	°C (°F)	Monthly Avg Daily Max	17.5 17.5	24.2 29.8	(1) 41.1 (106)	(1) 41.1 (106)
Effluent pH	su	Instant Min Instant Max	6.8 7.9	7.8 7.8	6.5 (2) 8.5 (2)	6.5 (2) 8.5 (2)
Influent pH	su	Instant Min Instant Max	6.6 8.4	-- --	(1) (1)	(1) (1)

(1) Monitor and report only
(2) When influent pH is less than 6.5, the effluent minimum limit shall be the influent pH; when the influent pH is greater than 8.5, the effluent maximum limit shall be the influent pH.

12 Permit Summary Table DSN366A

Unless otherwise noted all effluent limitations are expressed as maximums. Dashes (--) indicate there is no effluent data, no limitations, or no monitoring for this parameter depending on the column in which it appears.

PARAMETER	UNITS	AVERAGING PERIOD	WASTEWATER DATA 1/01 to 11/02	APPLICATION DATA 8/94	EXISTING LIMITS	FINAL LIMITS
Flow	MGD	Monthly Avg Daily Max	9.5 9.5	6.287 14.284	(1) (1)	(1) (1)
Chlorine Produced Oxidants	mg/L	Monthly Avg Daily Max	<0.1 <0.1	-- --	(1) 0.2	(1) 0.2
Temperature – Difference	°C (°F)	Monthly Avg Daily Max	1.9 1.9	-- --	(1) (1)	(1) (1)
Influent Temperature	°C (°F)	Monthly Avg Daily Max	16.3 16.3	-- --	(1) (1)	(1) (1)
Effluent Temperature	°C (°F)	Monthly Avg Daily Max	18.2 18.2	26.4 32	(1) 41.1 (106)	(1) 41.1 (106)
Effluent pH	su	Instant Min Instant Max	6.8 8.5	7.7 7.7	6.5 (2) 8.5 (2)	6.5 (2) 8.5 (2)
Influent pH	su	Instant Min Instant Max	6.9 8.0	-- --	(1) (1)	(1) (1)

(1) Monitor and report only
(2) When influent pH is less than 6.5, the effluent minimum limit shall be the influent pH; when the influent pH is greater than 8.5, the effluent maximum limit shall be the influent pH.

920980515

12 **Permit Summary Table DSN61PA**

Unless otherwise noted all effluent limitations are expressed as maximums. Dashes (--) indicate there is no effluent data, no limitations, or no monitoring for this parameter depending on the column in which it appears.

PARAMETER	UNITS	AVERAGING PERIOD	WASTEWATER DATA 1/01 to 11/02	APPLICATION DATA 8/94	EXISTING LIMITS	FINAL LIMITS
Flow	MGD	Monthly Avg Daily Max	0.226 1.0	1.526 2.422	(1) (1)	(1) (1)
Influent Total Suspended Solids	mg/l	Monthly Avg Daily Max	7 7	29 --	(1) (1)	(1) (1)
Effluent Total Suspended Solids	mg/l	Monthly Avg Daily Max	7 7	21 48	(1) (1)	(1) (1)
Net Total Suspended Solids	mg/l	Monthly Avg Daily Max	0 0	-- --	30 100	30 100
Petroleum Hydrocarbons	mg/l	Monthly Avg Instant Max	<0.084 <0.084	-- 1.91	10 15	10 15

(1) Monitor and report only

12 **Permit Summary Table DSNWTPA**

Unless otherwise noted all effluent limitations are expressed as maximums. Dashes (--) indicate there is no effluent data, no limitations, or no monitoring for this parameter depending on the column in which it appears.

PARAMETER	UNITS	AVERAGING PERIOD	WASTEWATER DATA 1/01 to 11/02	APPLICATION DATA 8/94	EXISTING LIMITS	FINAL LIMITS
Flow	MGD	Monthly Avg Daily Max	0.242 0.495	0.201 0.605	(1) (1)	(1) (1)
Total Organic Carbon	mg/l	Monthly Avg Daily Max	1.8 2.3	6 16	(1) 50	(1) 50
Total Suspended Solids	mg/L	Monthly Avg Daily Max	6 8	12 30	30 100	30 100
Petroleum Hydrocarbons	mg/l	Monthly Avg Instant Max	<0.085 <0.085	1.32 2.93	10 15	10 15
Total Recoverable Copper	ug/l	Monthly Avg Daily Max	6.2 6.4	-- --	(1) 1000	(1) 1000
Total Recoverable Iron	ug/l	Monthly Avg Daily Max	140 145	-- --	(1) 1000	(1) 1000
Total Recoverable Nickel	ug/l	Monthly Avg Daily Max	4 6	-- --	(1) 1000	(1) 1000
Acute Toxicity (LC50)	% effluent	Minimum	>100	--	50	50
Total Recoverable Zinc	ug/l	Monthly Avg Daily Max	32 49	-- --	(1) 1000	(1) 1000

(1) Monitor and report only

920980516

12

Permit Summary Table DSN61SA

Unless otherwise noted all effluent limitations are expressed as maximums. Dashes (--) indicate there is no effluent data, no limitations, or no monitoring for this parameter depending on the column in which it appears. Discharge to occur during periods of drought emergency conditions.

PARAMETER	UNITS	AVERAGING PERIOD	APPLICATION DATA 5/02	FINAL LIMITS
Flow	MGD	Monthly Avg Daily Max	0.04 0.144	(1) (1)
Total Suspended Solids	mg/l	Monthly Avg Daily Max	-- --	(1) (1)
Total Dissolved Solids	mg/l	Monthly Avg Daily Max	-- --	(1) (1)

(1) Monitor and report only

920980517

CONTENTS OF THE ADMINISTRATIVE RECORD

The following items are used to establish the basis of the Draft Permit:

1. 33 U.S.C. 1251 et seq., Federal Water Pollution Control Act.
2. N.J.S.A. 58:10A-1 et seq., New Jersey Water Pollution Control Act.
3. 40 CFR Part 122, National Pollutant Discharge Elimination System.
4. N.J.A.C. 7:14A-1 et seq., New Jersey Pollutant Discharge Elimination System Regulations. [A]
5. N.J.A.C. 7:9B-1 et seq., New Jersey Surface Water Quality Standards. [A]
6. 40 CFR Part 131, Federal Water Quality Standards. [A]
7. "Field Sampling Procedures Manual", published by the NJDEP. [A]
8. "Discharge Monitoring Report (DMR) Instructional Manual", published by the NJDEP. [A]
9. "EPA Technical Support Document for Water Quality-based Toxics Control", EPA/505/2-90-001, March 1991. [A]
10. "Significant Habitats and Habitat Complexes of the New York Bight Watershed", U.S. Fish and Wildlife Service's Southern New England – New York Bight Coastal Ecosystems Program, November 1997.
11. "Harbor Health/Human Health – An Analysis of Environmental Indicators for the NY/NJ Harbor Estuary", New York/New Jersey Harbor Estuary Program, March 2002.
12. "National Pollutant Discharge Elimination System – Proposed Regulations to Establish Requirements for Cooling Water Intake Structures at Phase II Existing Facilities", Environmental Protection Agency, February 28, 2002.
13. "Newman M. Fundamentals of Ecotoxicology", Ann Arbor, MI, Sleeping Bear Press, 1998.
14. "Human-related mortality of birds in the United States", U.S. Fish & Wildlife Services, Banks, R.C., 1979.
15. "Fisheries Ecosystem Monitoring & Assessment Project", William & Mary Fisheries Science & Virginia Institute of Marine Sciences.
16. "Technical Development Document for the Proposed Section 316(b) Phase II Existing Facilities Rule" (EPA-821-R-02-003).
17. "Water Monitoring Management: Volunteer Monitoring Guide for Macroinvertebrate Sampling and Data Analysis", New Jersey Department of Environmental Protection (NJDEP), Division of Science and Research, Ambient Biomonitoring Network (AMNET), 1997.
18. "Hudson Generating Station Supplemental 316(a) Demonstration", PSE&G, November 1998.
19. "Hudson Generating Station Supplemental 316(a) Demonstration Appendices", PSE&G, November 1998.
20. "Hudson Generating Station Supplemental 316(b) Demonstration", PSE&G, November 1998.
21. "Hudson Generating Station Supplemental 316(b) Demonstration Appendices", PSE&G, November 1998.
22. NJPDES/DSW Permit Application dated 8/2/94 and amended 11/5/98.
23. Letter dated 5/15/02 from PSE&G to Department requesting permission to install reverse osmosis (RO) system at facility to reduce potable water consumption during drought emergency.
24. NJPDES/DSW Permit NJ0000647, effective 2/1/90.
25. "Basis and Background: Regulation of Toxics in NJPDES/DSW Permits", NJDEP, April 15, 1993.
26. DMR data 1/01 – 11/02.

[A] Denotes items which may be found in the NJPDES/DSW Administrative Record Library located in the NJDEP Central File Room, 401 East State Street, Trenton, New Jersey.

920980518

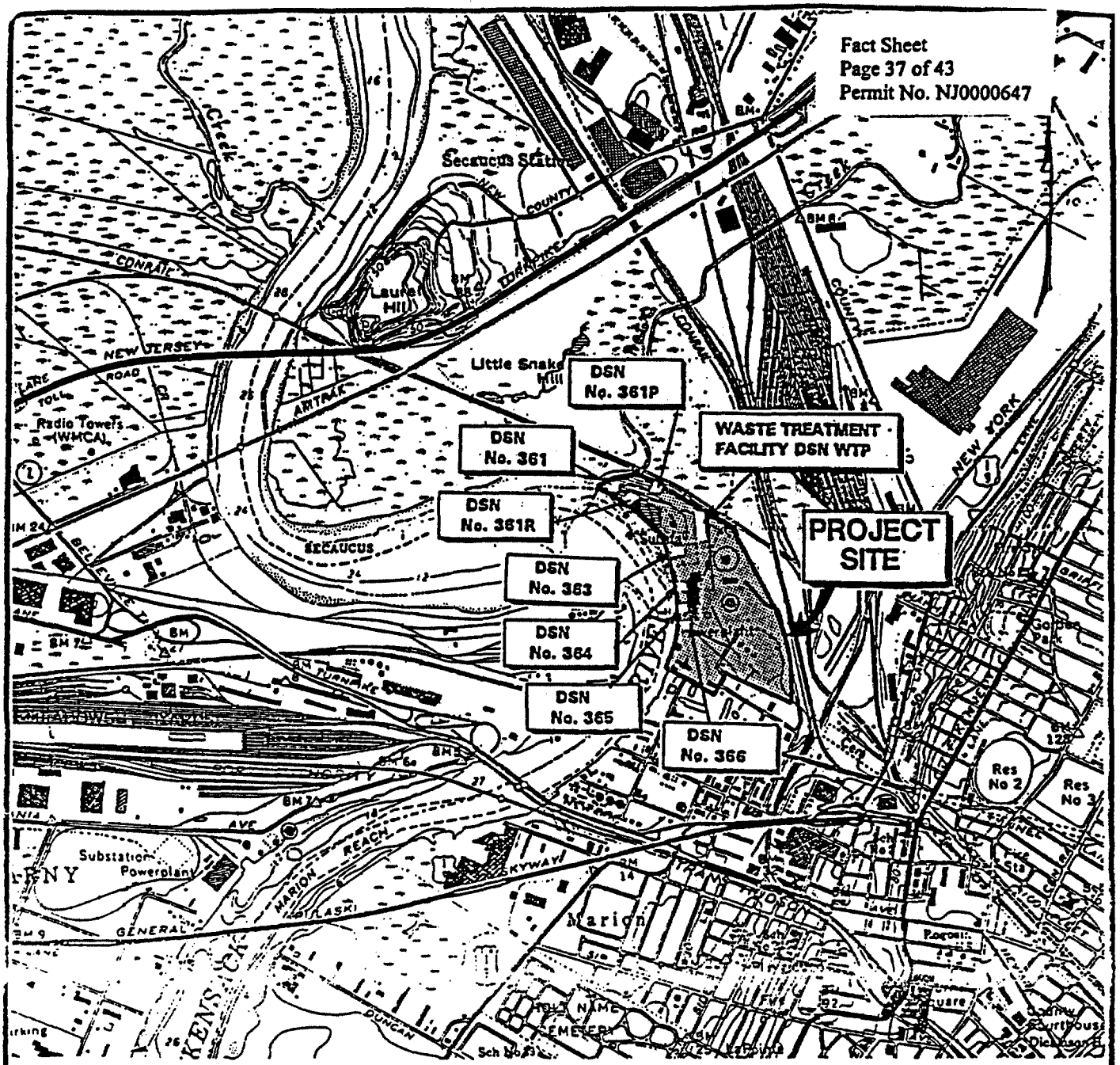

SOURCE:
U.S.G.S. TOPOGRAPHIC MAP
7.5. MINUTE SERIES QUAD
JERSEY CITY, N.J.-N.Y.
1967, PHOTOREVISED 1981
WEEHAWKEN, N.J.-N.Y.
1967, PHOTOREVISED 1981

PSP Segment Code 04000000
EPA Reach No. 02030103-001

USGS SITE LOCATION MAP
HUDSON GENERATING STATION
CITY OF JERSEY CITY
HUDSON COUNTY, NEW JERSEY

PUBLIC SERVICE ELECTRIC AND GAS COMPANY
80 PARK PLAZA
NEWARK, NEW JERSEY 07101

Drn. By:	Scale: as shown	Proj. No.
Ck'd By:	Date:	Fig. No.

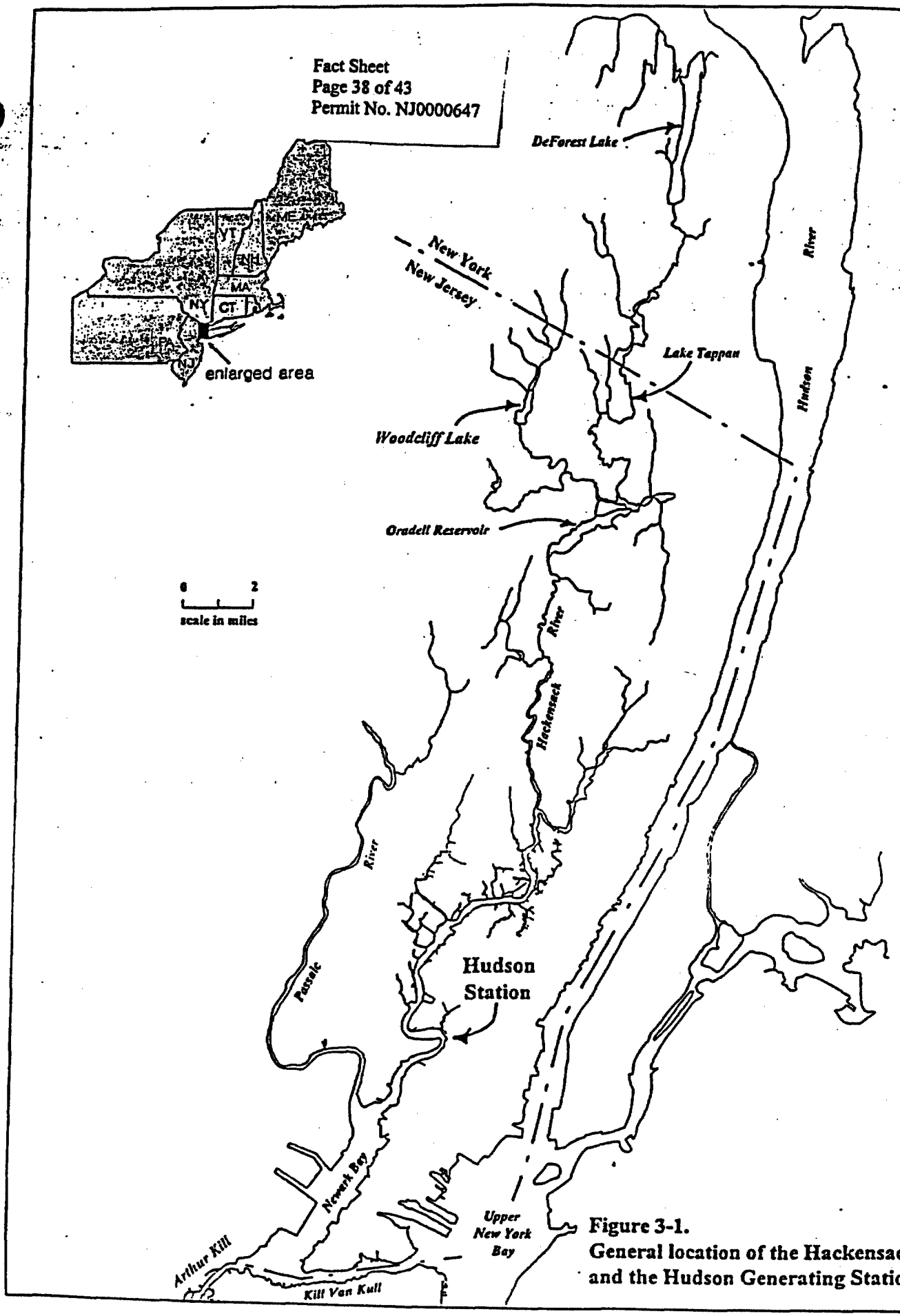

Figure 3-1.
General location of the Hackensack River and the Hudson Generating Station.

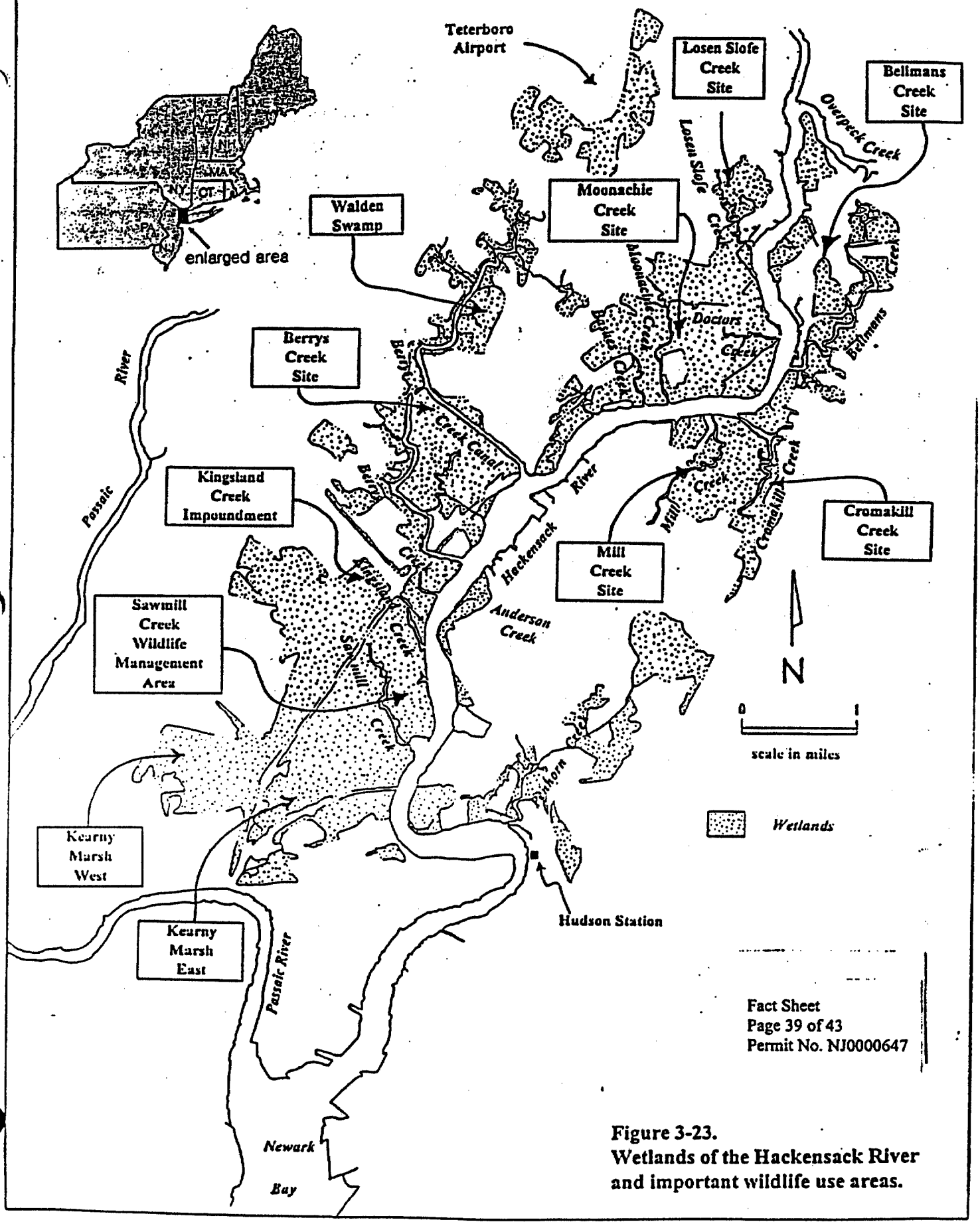

Figure 3-23.
Wetlands of the Hackensack River and important wildlife use areas.

920980521

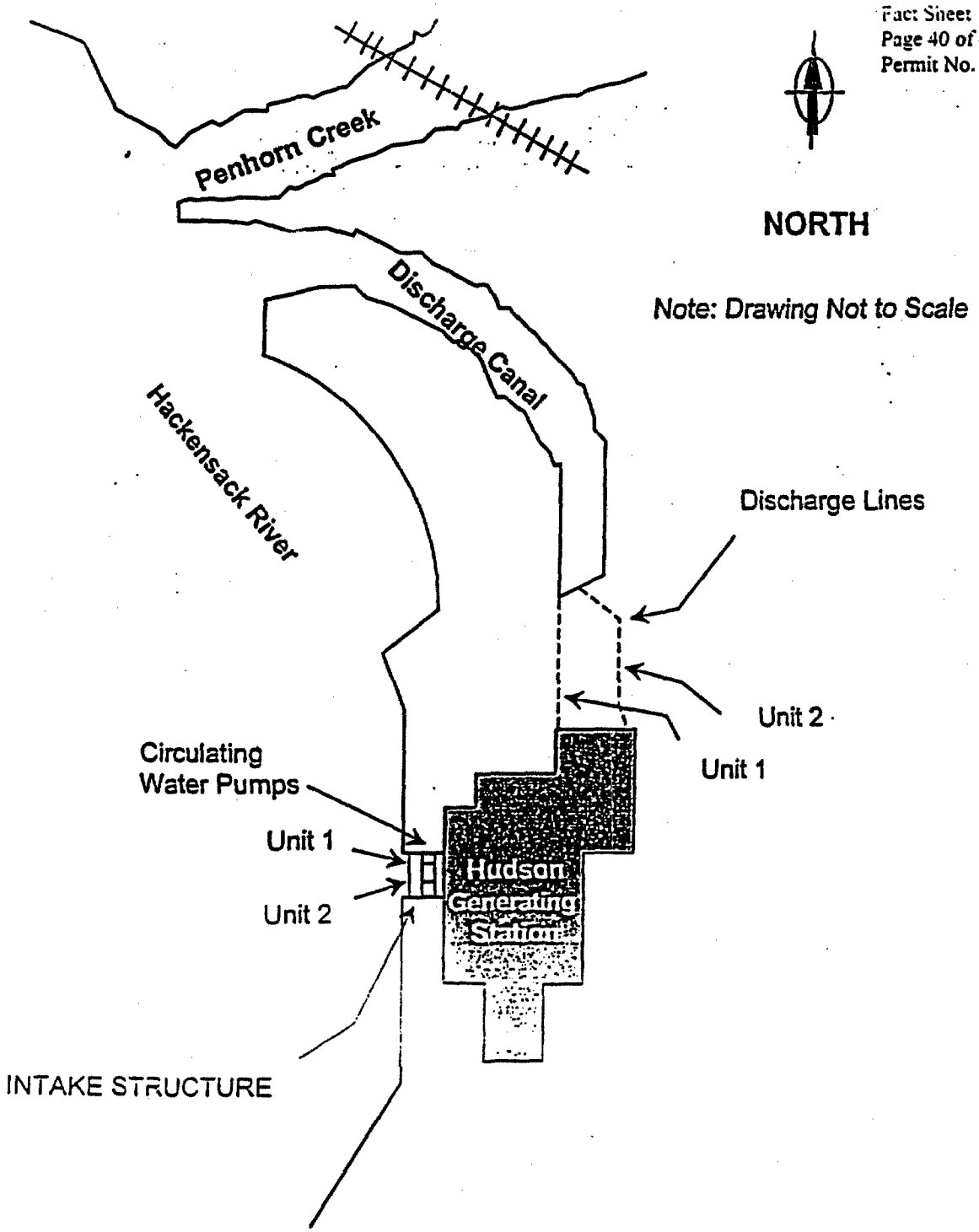

CONFIGURATION OF COOLING WATER AND DISCHARGE FACILITIES AT HUDSON GENERATING STATION

Figure 2-3

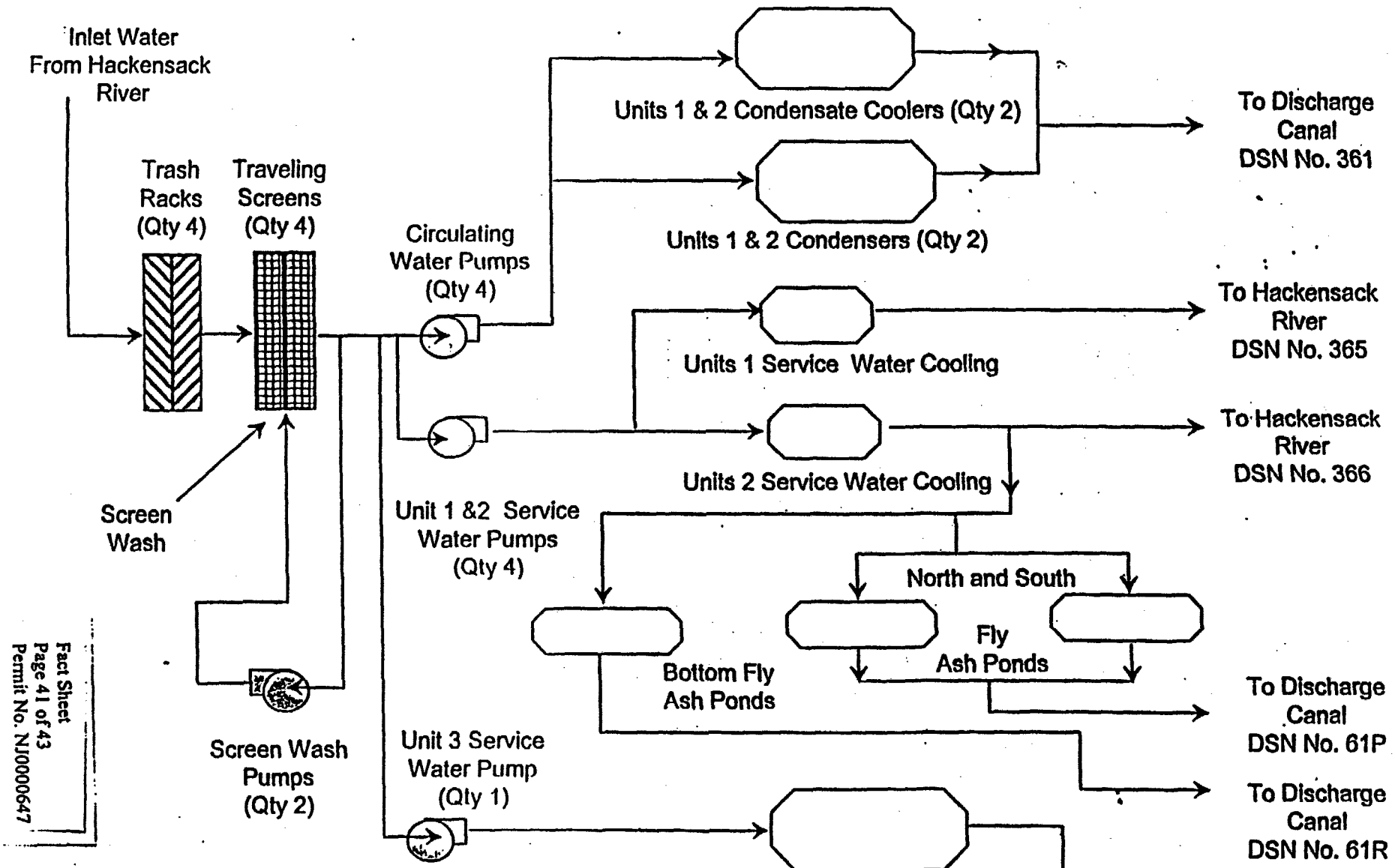

HUDSON GENERATING STATION
Circulating Water System
Units 1,2, and 3
Figure 2-2

Fact Sheet
Page 41 of 43
Permit No. NJ0000647

920980523

Schematic of Water Flow
PSEG Fossil LLC
Hudson Generating Station

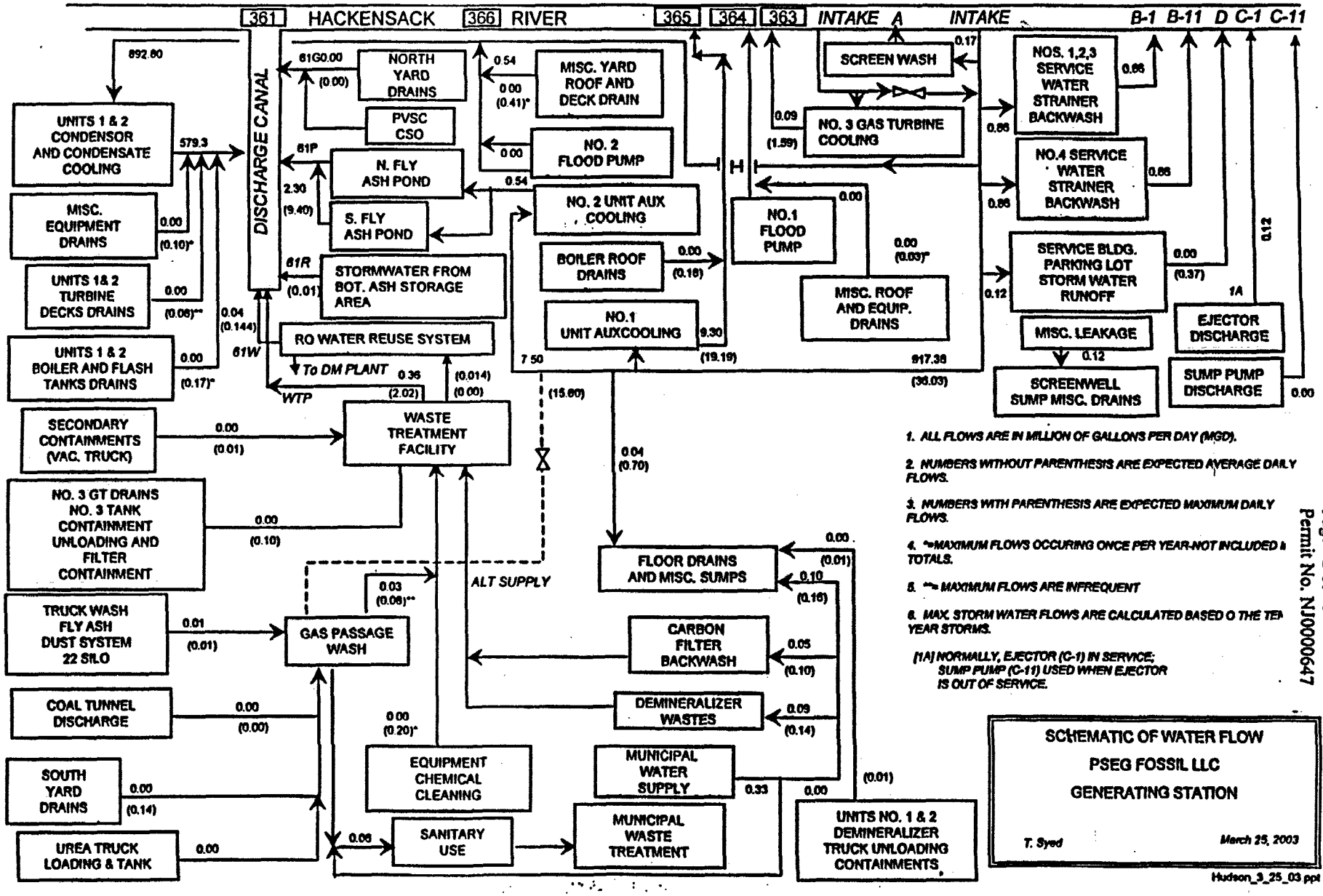

1. *ALL FLOWS ARE IN MILLION OF GALLONS PER DAY (MGD).*
2. *NUMBERS WITHOUT PARENTHESIS ARE EXPECTED AVERAGE DAILY FLOWS.*
3. *NUMBERS WITH PARENTHESIS ARE EXPECTED MAXIMUM DAILY FLOWS.*
4. *"*" MAXIMUM FLOWS OCCURING ONCE PER YEAR-NOT INCLUDED I TOTALS.*
5. *"**" MAXIMUM FLOWS ARE INFREQUENT*
6. *MAX. STORM WATER FLOWS ARE CALCULATED BASED O THE TEN YEAR STORMS.*

[1A] NORMALLY, EJECTOR (C-1) IN SERVICE; SUMP PUMP (C-11) USED WHEN EJECTOR IS OUT OF SERVICE.

SCHEMATIC OF WATER FLOW
PSEG FOSSIL LLC
GENERATING STATION

T. Syed *March 25, 2003*

Hudson_3_25_03.ppt

920980524

NEW JERSEY POLLUTANT DISCHARGE ELIMINATION SYSTEM

The New Jersey Department of Environmental Protection hereby grants you a NJPDES permit for the facility/activity named in this document. This permit is the regulatory mechanism used by the Department to help ensure your discharge will not harm the environment. By complying with the terms and conditions specified, you are assuming an important role in protecting New Jersey's valuable water resources. Your acceptance of this permit is an agreement to conform with all of its provisions when constructing, installing, modifying, or operating any facility for the collection, treatment, or discharge of pollutants to waters of the state. If you have any questions about this document, please feel free to contact the Department representative listed in the permit cover letter. Your cooperation in helping us protect and safeguard our state's environment is appreciated.

Permit Number: NJ0000647

Draft: Surface Water Renewal Permit Action

Permittee:
PSEG Fossil LLC
80 Park Plaza
Newark, NJ 07102

Co-Permittee:

Property Owner:
PSEG Fossil LLC
80 Park Plaza
Newark, NJ 07102

Location Of Activity:
Hudson Generating Station
Duffield & Van Keuren Avenues
Jersey City, NJ 07306

Authorization(s) Covered Under This Approval	Issuance Date	Effective Date	Expiration Date
B -Industrial Wastewater			

By Authority of:
Commissioner's Office

DEP AUTHORIZATION
Howard B. Tompkins, Chief
Bureau of Point Source Permitting – Region 1
Division of Water Quality

(Terms, conditions and provisions attached hereto)

920980525

PART I
GENERAL REQUIREMENTS: NJPDES

A. General Requirements of all NJPDES Permits

1. Requirements Incorporated by Reference

a. The permittee shall comply with all conditions set forth in this permit and with all the applicable requirements incorporated into this permit by reference. The permittee is required to comply with the regulations, including those cited in paragraphs b. through e. following, which are in effect as of the effective date of the final permit.

b. General Conditions

Penalties for Violations	N.J.A.C. 7:14-8.1 et seq.
Incorporation by Reference	N.J.A.C. 7:14A-2.3
Toxic Pollutants	N.J.A.C. 7:14A-6.2(a)4i
Duty to Comply	N.J.A.C. 7:14A-6.2(a)1 & 4
Duty to Mitigate	N.J.A.C. 7:14A-6.2(a)5 & 11
Inspection and Entry	N.J.A.C. 7:14A-2.11(c)
Enforcement Action	N.J.A.C. 7:14A-2.9
Duty to Reapply	N.J.A.C. 7:14A-4.2(c)3
Signatory Requirements for Applications and Reports	N.J.A.C. 7:14A-4.9
Effect of Permit/Other Laws	N.J.A.C. 7:14A-6.2(a)6 & 7 & 2.9(c)
Severability	N.J.A.C. 7:14A-2.2
Administrative Continuation of Permits	N.J.A.C. 7:14A-2.8
Permit Actions	N.J.A.C. 7:14A-2.7(c)
Reopener Clause	N.J.A.C. 7:14A-6.2(a)10
Permit Duration and Renewal	N.J.A.C. 7:14A-2.7(a) & (b)
Consolidation of Permit Process	N.J.A.C. 7:14A-15.5
Confidentiality	N.J.A.C. 7:14A-18.2 & 2.11(g)
Fee Schedule	N.J.A.C. 7:14A-3.1
Treatment Works Approval	N.J.A.C. 7:14A-22 & 23

c. Operation And Maintenance

Need to Halt or Reduce not a Defense	N.J.A.C. 7:14A-2.9(b)
Proper Operation and Maintenance	N.J.A.C. 7:14A-6.12

d. Monitoring And Records

Monitoring	N.J.A.C. 7:14A-6.5
Recordkeeping	N.J.A.C. 7:14A-6.6
Signatory Requirements for Monitoring Reports	N.J.A.C. 7:14A-6.9

e. Reporting Requirements

Planned Changes	N.J.A.C. 7:14A-6.7
Reporting of Monitoring Results	N.J.A.C. 7:14A-6.8
Noncompliance Reporting	N.J.A.C. 7:14A-6.10 & 6.8(h)
Hotline/Two Hour & Twenty-four Hour Reporting	N.J.A.C. 7:14A-6.10(c) & (d)
Written Reporting	N.J.A.C. 7:14A-6.10(e) &(f) & 6.8(h)
Duty to Provide Information	N.J.A.C. 7:14A-2.11, 6.2(a)14 & 18.1
Schedules of Compliance	N.J.A.C. 7:14A-6.4
Transfer	N.J.A.C. 7:14A-6.2(a)8 & 16.2

920980526

PART II

GENERAL REQUIREMENTS: DISCHARGE CATEGORIES

A. Additional Requirements Incorporated By Reference

1. Requirements for Discharges to Surface Waters

a. In addition to conditions in Part I of this permit, the conditions in this section are applicable to activities at the permitted location and are incorporated by reference. The permittee is required to comply with the regulations which are in effect as of the effective date of the final permit.

i. Surface Water Quality Standards N.J.A.C. 7:9B-1

ii. Water Quality Management Planning Regulations N.J.A.C. 7:15

B. General Conditions

1. Scope

a. The issuance of this permit shall not be considered as a waiver of any applicable federal, state, and local rules, regulations and ordinances.

2. Permit Renewal Requirement

a. Permit conditions remain in effect and enforceable until and unless the permit is modified, renewed or revoked by the Department.

b. Submit a complete permit renewal application: 180 days before the Expiration Date.

3. Notification of Non-Compliance

a. The permittee shall notify the Department of all non-compliance when required in accordance with N.J.A.C. 7:14A-6.10 by contacting the DEP HOTLINE at 1-877-WARNDEP (1-877-927-6337).

b. The permittee shall submit a written report as required by N.J.A.C. 7:14A-6.10 within five days.

4. Notification of Changes

a. The permittee shall give written notification to the Department of any planned physical or operational alterations or additions to the permitted facility when the alteration is expected to result in a significant change in the permittee's discharge and/or residuals use or disposal practices including the cessation of discharge in accordance with N.J.A.C. 7:14A-6.7.

b. Prior to any change in ownership, the current permittee shall comply with the requirements of N.J.A.C. 7:14A-16.2, pertaining to the notification of change in ownership.

5. Access to Information

920980527

a. The permittee shall allow an authorized representative of the Department, upon the presentation of credentials, to enter upon a person's premises, for purposes of inspection, and to access / copy any records that must be kept under the conditions of this permit.

6. **Operator Certification**

a. Pursuant to N.J.A.C. 7:10A-1.1 et seq. every wastewater system not exempt pursuant to N.J.A.C. 7:10A-1.1(b) requires a licensed operator. The operator of a system shall meet the Department's requirements pursuant to N.J.A.C. 7:10A-1.1 and any amendments. The name of the proposed operator, where required shall be submitted to the Department at the address below, in order that his/her qualifications may be determined prior to initiating operation of the treatment works.

i. Notifcations shall be submitted to:
NJDEP
Examination and Licensing Unit
P.O. Box 417
Trenton, New Jersey 08625
(609)777-1012

b. The permittee shall notify the Department of any changes in licensed operator within two weeks of the change.

7. **Operation Restrictions**

a. The operation of a waste treatment or disposal facility shall at no time create: (a) a discharge, except as authorized by the Department in the manner and location specified in Part III of this permit; (b) any discharge to the waters of the state or any standing or ponded condtion for water or waste, except as specifically authorized by a valid NJPDES permit.

8. **Residuals Management**

a. The permittee shall comply with land-based sludge management criteria and shall conform with the requirements for the management of residuals and grit and screenings under N.J.A.C. 7:14A-6.15(a), which includes:

i. Standards for the Use or Disposal of Residual, N.J.A.C. 7:14A-20;

ii. Section 405 of the Federal Act governing the disposal of sludge from treatment works treating domestic sewage;

iii. The Solid Waste Management Act, N.J.S.A. 13:1E-1 et seq., and the Solid Waste Management Rules, N.J.A.C. 7:26;

iv. The Sludge Quality Assurance Regulations, N.J.A.C. 7:14C;

v. The Statewide Sludge Management Plan promulgated pursuant to the Water Quality Planning Act, N.J.S.A. 58:11A-1 et seq., and the Solid Waste Management Act, N.J.S.A. 13:1E-1 et seq.; and

vi. The provisions concerning disposal of sewage sludge and septage in sanitary landfills set forth at N.J.S.A. 13:1E-42 and the Statewide Sludge Management Plan.

vii. Residual that is disposed in a municipal solid waste landfill unit shall meet the requirements in 40 CFR Part 258 and/or N.J.A.C. 7:26 concerning the quality of residual disposed in a municipal solid waste landfill unit. (That is, passes the Toxicity Characteristic Leaching Procedure and does not contain "free liquids" as defined at N.J.A.C. 7:14A-1.2.)

920980528

b. If any applicable standard for residual use or disposal is promulgated under section 405(d)of the Federal Act and Sections 4 and 6 of the State Act and that standard is more stringent than any limitation on the pollutant or practice in the permit, the Department may modify or revoke and reissue the permit to conform to the standard for residual use or disposal.

c. The permittee shall make provisions for storage, or some other approved alternative management strategy, for anticipated downtimes at a primary residual management alternative. The permittee shall not be permitted to store residual beyond the capacity of the structural treatment and storage components of the treatment works. N.J.A.C. 7:14A-20.8(a) and N.J.A.C. 7:26 provide for the temporary storage of residuals for periods not exceeding six months, provided such storage does not cause pollutants to enter surface or ground waters of the State. The storage of residual for more than six months is not authorized under this permit. However, this prohibition does not apply to residual that remains on the land for longer than six months when the person who prepares the residual demonstrates that the land on which the residual remains is not a surface disposal site or landfill. The demonstration shall explain why residual must remain on the land for longer than six months prior to final use or disposal, discuss the approximate time period during which the residual shall be used or disposed and provide documentation of ultimate residual management arrangements. Said demonstration shall be in writing, be kept on file by the person who prepares residual, and submitted to the Department upon request.

d. The permittee shall comply with the appropriate adopted District Solid Waste or Sludge Management Plan (which by definition in N.J.A.C. 7:14A-1.2 includes Generator Sludge Management Plans), unless otherwise specifically exempted by the Department.

e. The preparer must notify and provide information necessary to comply with the N.J.A.C. 7:14A-20 land application requirements to the person who applies bulk residual to the land. This shall include, but not be limited to, the applicable recordkeeping requirements and certification statements of 40 CFR 503.17 as referenced at N.J.A.C 7:14A-20.7(j).

f. The preparer who provides biosolids to another person who further prepares the biosolids for application to the land must provide this person with notification and information necessary to comply with the N.J.A.C. 7:14A-20 land application requirements.

g. Any person who prepares bulk residual in New Jersey that is applied to land in a State other than New Jersey shall comply with the requirement at N.J.A.C. 7:14A-20.7(b)1.ix and/or 20.7(b)1.x, as applicable, to provide written notice to the Department and to the permitting authority for the State in which the bulk residual is proposed to be applied.

920980529

920980530

State of New Jersey
Department of Environmental Protection
Division of Water Quality
P.O. Box 029 Trenton, NJ 08625-0029
FAX: (609) 777-0432

Christine Todd Whitman
Governor

Robert C. Shinn, Jr.
Commissioner

OCT 0 3 2000

Patrick D. Colgan, Vice President
PSEG Fossil, LLC
80 Park Plaza
PO Box 570
Newark, NJ 07102

RE: NJPDES Minor Modification

NJPDES Permit No.:	NJ0000639	NJ0000663	NJ0004995	NJ0117951	NJ0122181
	NJ0000647	NJ0000680	NJ0005002	NJ0110213	NJ0120324
	NJ0000655	NJ0003603	NJ0110795	NJ0120511	NJ0126691

Dear Mr. Colgan:

The Department is in receipt of your request to transfer ownership of the above referenced NJPDES permits from PSE&G Company to PSEG Fossil, LLC.

In accordance with N.J.A.C. 7:14A-16.2, the Department is modifying your NJPDES Permit to reflect this change. All other permit conditions remain unchanged. Enclosed is the revised permit page with the new company name.

Please note that you must notify the Department of Treasury, if you change licensed operators. Notification must be sent to:

Department of Treasury
Division of Revenue
Examination and Licensing Unit
P.O. Box 417
Trenton, New Jersey 08625 – 0417

If you have any questions please feel free to contact Carthen M. Baker of my staff at (609) 984-4428.

Sincerely,

William F. Boehle

William F. Boehle, P.E., Acting Chief
Bureau of Permit Management

c: Bureau of Nonpoint Pollution Control
Bureau of Point Source Permitting Region 1
Bureau of Point Source Permitting Region 2
Northern, Southern, & Central Bureaus of Water Compliance and Enforcement
Administrative Review Unit
Central File – Administrative Records

NEW JERSEY POLLUTANT DISCHARGE ELIMINATION SYSTEM

The New Jersey Department of Environmental Protection hereby grants you a NJPDES permit for the facility/activity named in this document. This permit is the regulatory mechanism used by the Department to help ensure your discharge will not harm the environment. By complying with the terms and conditions specified, you are assuming an important role in protecting New Jersey's valuable water resources. Your acceptance of this permit is an agreement to conform with all of its provisions when constructing, installing, modifying, or operating any facility for the collection, treatment, or discharge of pollutants to waters of the state. If you have any questions about this document, please feel free to contact the Department representative listed in the permit cover letter. Your cooperation in helping us protect and safeguard our state's environment is appreciated.

Permit Number: NJ0000647

Final: Minor Modification

Permittee:
PSEG FOSSIL LLC
80 PARK PLZ
PO BOX 570
NEWARK, NJ 07102

Co-Permittee:

Property Owner:
PSEG Power LLC
80 PARK PLZ
PO BOX 570
NEWARK, NJ 07102

Location Of Activity:
HUDSON GENERATING STATION
DUFFIELD & VAN KEUREN AVES
JERSEY CITY, NJ 07306

Authorization(s) Covered Under This Approval	Issuance Date	Effective Date	Expiration Date
B -Industrial Wastewater	12/29/1989	02/01/1990	01/31/1995

Minor Modification to Transfer Ownership **Issued: 09/01/00** **Effective: 09/01/00**

By Authority of:
Commissioner's Office

DEP AUTHORIZATION
Howard B. Tompkins, Acting Chief
Bureau of Point Source Permitting Region 1
Division of Water Quality

MF00015746/PI46808

(Terms, conditions and provisions attached hereto)

920980532

New Jersey Department of Environmental Protection
Bureau of Nonpoint Pollution Control
Division of Water Quality
PO Box 029
Trenton, NJ 08625-0029
(609) 633-7021

AUTHORIZATION TO DISCHARGE
5G2 -General Permit Stormwater Basic

Facility Name: **PI #:** 46808

HUDSON GENERATING STATION

Facility Address: **NJPDES #:** NJG0120324
DUFFIELD & VAN KEUREN AVES
JERSEY CITY, NJ 07306

SIC Code: 4911

Type of Activity: Stormwater Discharge Minor Modification
Owner:
PSEG POWER LLC
80 PARK PLZ
PO BOX 570
NEWARK, NJ 07102

Operating Entity:
PSEG FOSSIL LLC
80 PARK PLZ
PO BOX 570
NEWARK, NJ 07102

Issuance Date:	Effective Date:	Expiration Date:
05/05/1997	05/05/1997	01/31/2002

Your Request for Authorization under NJPDES General Permit No. NJ0088315 has been approved by the New Jersey Department of Environmental Protection.

Minor Modification to Transfer Ownership **Issued: 09/01/00** **Effective: 09/01/00**

_____ **Date: 09/01/00**

Barry Chalofsky, P.P., Chief
Bureau of Nonpoint Pollution Control
Division of Water Quality
New Jersey Department of Environmental Protection

MF00015746/PI46808

920980533

New Jersey Department of Environmental Protection

NEW JERSEY POLLUTANT DISCHARGE ELIMINATION SYSTEM

The New Jersey Department of Environmental Protection hereby grants you a NJPDES permit for the facility/activity named in this document. This permit is the regulatory mechanism used by the Department to help ensure your discharge will not harm the environment. By complying with the terms and conditions specified, you are assuming an important role in protecting New Jersey's valuable water resources. Your acceptance of this permit is an agreement to conform with all of its provisions when constructing, installing, modifying, or operating any facility for the collection, treatment, or discharge of pollutants to waters of the state. If you have any questions about this document, please feel free to contact the Department representative listed in the permit cover letter. Your cooperation in helping us protect and safeguard our state's environment is appreciated.

Permit Number: NJ0000655

Final: Minor Modification

Permittee:
PSEG FOSSIL LLC
80 PARK PLZ
PO BOX 570
NEWARK, NJ 07102

Co-Permittee:

Property Owner:
PSEG POWER LLC
80 PARK PLZ
PO BOX 570
NEWARK, NJ 07102

Location Of Activity:
KEARNY GENERATING STATION
FOOT OF HACKENSACK AVE
KEARNY, NJ 07032-0000

Authorization(s) Covered Under This Approval	Issuance Date	Effective Date	Expiration Date
B -Industrial Wastewater	08/30/1985	11/01/1985	09/30/1990

MINOR MODIFICATION TO TRANSFER OWNERSHIP ISSUED: 09/01/00 EFFECTIVE: 09/01/00

Kearny

920980534

New Jersey Department of Environmental Protection
Bureau of Nonpoint Pollution Control
Division of Water Quality
PO Box 029
Trenton, NJ 08625-0029
(609) 633-7021

AUTHORIZATION TO DISCHARGE
5G2 -General Permit Stormwater Basic

Facility Name: **PI #:** 46809

KEARNY GENERATING STATION

Facility Address: **NJPDES #:** NJG0120511
FOOT OF HACKENSACK AVE
KEARNY, NJ 07032-0000

SIC Code: 4911

Type of Activity: Stowmwater Discharge Minor Modification
Owner:
PSEG POWER LLC
80 PARK PLZ
PO BOX 570
NEWARK, NJ 07102

Operating Entity:
PSEG FOSSIL LLC
80 PARK PLZ
PO BOX 570
NEWARK, NJ 07102

Issuance Date:	Effective Date:	Expiration Date:
05/05/1997	05/05/1997	01/31/2002

Your Request for Authorization under NJPDES General Permit No. NJ0088315 has been approved by the New Jersey Department of Environmental Protection.

Minor Modification to Transfer Ownership **Issued: 09/01/00** **Effective: 09/01/00**

_____ **Date: 09/01/00**

Barry Chalofsky, P.P., Chief
Bureau of Nonpoint Pollution Control
Division of Water Quality
New Jersey Department of Environmental Protection

Kearny

09

920980535

37

Date Printed: ..30/2004

Compliance Evaluation Summary

:tivity: SCI040001 *Standard Compliance Inspection (46808)

Start Date/Time: 7/1/2004 13:00 **End Date/Time:** 7/1/2004 15:00

Lead Investigator: Wright, Helen

Other Investigators:

Persons Interviewed: Michael G. Cullen, Senior Environmental Engineer and N-2 Licensed Operator. Phone: 201-217-3672, Fax: 201-792-9736, Pager: 973-465-8523
Vince Minetti, Consultant. Phone: 973-663-0600, Fax: 973-633-0690, Cell: 973-713-4639

Witnesses:

Program Interest: 46808 HUDSON GENERATING STATION (NJPDES)
DUFFIELD & VAN KEUREN AVES
Jersey City, Hudson County

Block 1200, Lot 1B, 2, 3A, 3B, 4A, 4D, 23B
Block 1200, Lot 24-31
Block 673, Lot 3B, 4A, 4C, 4D
Block 4A,4C, Lot 673
Block 681, Lot 6A, 6F, 6S, 6T, 6U
Block 681, Lot 8C, 9, 10C, 10D

Responsible Entities: PSE&G FOSSIL LLC

Comments: NJPDES Permit No. NJ0000647 DSW, Effective Date 8/1/03, Expires 7/31/08.

Discharge Outfalls: 361 - NCCW; 363 - Gas Turbine NCCW; 364 - NCCW; 365 - NCCW; 366 - NCCW; 61PA - Fly Ash Pond; 61SA - Reverse osmosis reject water; WTPA - Treated wastewater.

NJPDES Permit No. NJ0120324 General Stormwater Permit.

Physical Connection Permit No. 0816.

Discharge Monitoring Reports were reviewed for the period of January 2004 through May 2004. There were no violations.

Notification of Rotamine Dye Test to be conducted for DSN 361A during the week of July 12, 2004.

BJB000103

920980537

Requirement	Status	Results/Comments
Item: B - Industrial Wastewater		
Flow shall be measured using a flow meter for outfalls DSNWTPA, DSN61PA, and DSN61SA. [N.J.A.C. 7:14A- 6.2(a)1]	IC	
Chlorine Produced Oxidants (CPOs) may not be discharged from any single generating unit for more than two hours per day unless the permittee demonstrates to the permitting authority that discharge for more than two hours is required for macroinvertebrate control. Simultaneous multi-unit chlorination is permitted. Sampling for CPO shall take place during chlorination.	IC	Discharges are computer timed for compliance.
For outfalls DSN361A, DSN363A, DSN364A, DSN365A, and DSN366A: when influent pH is less than 6.5, the effluent minimum limit shall be the influent pH; when the influent pH is greater than 8.5, the effluent maximum limit shall be the influent pH. [N.J.A.C. 7:14A- 6.2(a)1]	DC	
Batch sampling for total copper, total iron, total recoverable nickel and total recoverable zinc shall be taken during the discharge of chemical/metal cleaning wastewater.	IC	
Section 316(b) Report Submittal Requirements	S	
The permittee shall install modified ristoph screens with coarse mesh. The new screens will be equipped with a spray wash system and fish return system. In addition, the permittee shall modify the existing curtain wall to reduce intake velocities. These ...e modifications shall be completed within two years of the effective date of the ...it on a single unit. The same intake modifications shall be completed on the ...nd unit within 3.5 years of the effective date of the permit to allow a side by side comparison of the old and modified intake designs during the interim period between completion of the first and second unit modifications.	IC	See Adjudicatory Hearing Documents.
Submit a Thermal 316 Study Workplan: within 18 months from the effective date of this document. The workplan shall involve demonstrating compliance with 316(b) of the Clean Water Act.	IC	
Permittee shall implement the NJDEP approved study plan after the installation and operation of the modified intake structure on the first unit.	IC	
The permittee is authorized to chlorinate their cooling water in accordance with A. above. The permittee is also authorized to use the following biocides for the treatment of non-contact cooling water: sodium hypochlorite and 1 Bromo 3 Chloro 55 Dimethyl Hydantion. [N.J.A.C. 7:14A- 6.7]	DC	
Submit an acute whole effluent toxicity test report: within twenty-five days after the end of every 12 month monitoring period beginning from the effective date of the permit (EDP). The permittee shall submit toxicity test results on appropriate forms. [N.J.A.C. 7:14A-13.6(a)]	IC	
DISCHARGE REQUIREMENTS.	S	
Did the permittee discharge only at the authorized location(s)?. [N.J.A.C. 7:14A-13.16(a)1]	IC	

In Compliance
OC - Out of Compliance
NI - Not Inspected
NC - No Obvious Concern
H - Heading
ND - Compliance Not Determined
NA - Not Applicable
PV - Potential Violation
ON - Out of Compliance, Non-referred
Y - Yes

Requirement	Status	Results or Comments
Subject Item: B - Industrial Wastewater		
Did the permittee complete monitoring reports in accordance with the current Discharge Monitoring Report Manual and any updates?. [N.J.A.C. 7:14A- 6.2(a)1]	IC	
Did the permittee collect and analyze the concentration of ammonia-N in the effluent on the day a sample is collected for WET testing. [N.J.A.C. 7:14A-13.6(a)]	IC	
Did the highest ranking official having day-to-day managerial and operational responsibilities for the discharging facility sign the monitoring reports?. [N.J.A.C. 7:14A- 6.9(a)]	IC	Francis X. Sullivan.
Did the permittee resubmit an Acute Methodology Questionnaire within 60 days of any change in laboratory?. [N.J.A.C. 7:14A-13.6(a)]	NA	
RECORDKEEPING	H	
Does the permittee appropriately retain monitoring records? . [N.J.A.C. 7:14A- 6.6(a)]	IC	
Does the permittee retain copies of all reports required by a NJPDES permit and records of all data used to complete the application for a NJPDES permit for a period at least 5 years? . [N.J.A.C. 7:14A- 6.6(a)]	IC	
OPERATION, MAINTENANCE, AND EMERGENCY CONDITIONS.	S	
Does the permittee maintain a current O&M Manual which includes an emergency plan?. [N.J.A.C. 7:14A- 6.12(c)&(d)]	IC	
Does the permittee operate and maintain the treatment works as specified in the O&M Manual?. [N.J.A.C. 7:14A- 6.12(a)]	IC	
TOXICITY REDUCTION IMPLEMENTATION REQUIREMENTS.	S	
Subject Item: GDR - General Discharge Requirements		
Immediately comply with the monitoring and reporting requirements of the NJPDES Permit. [N.J.A.C. 7:14A- 2]	IC	
Immediately comply with your NJPDES Permit by sampling and reporting as required. [N.J.A.C. 7:14A-14]	IC	

...n Compliance
... Out of Compliance
... - Not Inspected
NC - No Obvious Concern
H - Heading
N - No

ND - Compliance Not Determined
NA - Not Applicable
PV - Potential Violation
ON - Out of Compliance, Non-referred
Y - Yes

920980539

Requirement	Status	Results of Comments

Subject Item: GDR - General Discharge Requirements

Are all violations reported to the Department as required in N.J.A.C. 7:14A-6.10?. [N.J.A.C. 7:14A- 6.10]	IC	
Is the permittee in compliance with land-based sludge management criteria and the requirements for the management of residuals and grit and screenings?. [N.J.A.C. 7:14A- 6.15(a)]	IC	
Does the permittee have any discharges not authorized by a valid permit?. [N.J.A.C. 7:14A- 6.2(a)1]	IC	No.
OPERATOR CERTIFICATION.	S	
Does the facility employ a licensed operator who holds the appropriate classification of license to operate the treatment works?. [N.J.A.C. 7:10A- 1.1]	IC	Michael Cullen is the N-2 Licensed Operator, also Vince Minetti and Mike Schwartz.
Has the permittee notified the Department's Examination and Licensing Unit of any changes in licensed operator status?. [N.J.A.C. 7:10A- 1.1]	NA	

Subject Item: WLOP - Water - Licensed Operator Requirements

LICENSED OPERATOR.	H	
Does the owner of a system employ a licensed operator holding the license prescribed by the Department for that classification of system?. [N.J.A.C. 7:10A- 1.10(a)]	IC	
Does the licensed operator have readily available written detailed operations and maintenance (O&M) procedures as required by the rules?. [N.J.A.C. 7:10A- 1.12(a)1]	IC	
Does the licensed operator properly operate and maintain the system?. [N.J.A.C. 7:10A- 1.12(a)2i]	IC	
Does the licensed operator schedule routine inspections and preventative maintenance tasks which will be undertaken to preserve the physical integrity of the system?. [N.J.A.C. 7:10A- 1.12(a)2ii]	IC	
Did the licensed operator establish and implement a routine recordkeeping system designed to incorporate all O&M procedures that relate to the system?. [N.J.A.C. 7:10A- 1.12(a)2iii]	IC	
Did the licensed operator develop a protocol for the system designed to ensure that each employee associated with the system is acquainted with his or her particular responsibilities and obligations, including the protocol to be followed in the event of an emergency?. [N.J.A.C. 7:10A- 1.12(a)2iv]	IC	

In Compliance
OC - Out of Compliance
NI - Not Inspected
NC - No Obvious Concern
H - Heading
N - No
ND - Compliance Not Determined
NA - Not Applicable
PV - Potential Violation
ON - Out of Compliance, Non-referred
Y - Yes
DC - Data Collection

Requirement	Status	Results or Comments
Subject Item: WQSW - Water - Pre-NJEMS Surface Water Permit		
SLUDGE MANAGEMENT.	H	
Where do the residuals go and what hauler removes them?.[N.J.A.C, 7:14A-20]	IC	Residuals are taken to the New Jersey Meadowlands Facility by Waste Management.
Subject Item: WSPC265 - Physical Connection Valve SI		
No modification to an approved physical connection installation listed in N.J.A.C. 7:10-10.7(b) shall be made prior to submitting a written request to the Department. [N.J.A.C. 7:10-10.10(7)b]	NA	
For this permit to remain valid, the inspections and testing required pursuant to N.J.A.C. 7:10-10.6(a) shall be conducted by an authorized representative of the owner of the facility where the backflow prevention device is installed in the presence of an authorized representative of the administrative authority and/or the supplier of water, or by a certified tester who holds a valid backflow prevention device testers certificate issued by a certifying agency approved by the Department pursuant to N.J.A.C. 7:10-10.8. [N.J.A.C. 7:10-10.10(6)a2]	IC	
For this permit to remain valid, each physical connection installation backflow prevention valve listed on this permit shall be inspected and tested for tightness under sailing pressure conditions at least once every three months pursuant to N.J.A.C. 0-10.6(a)1. [N.J.A.C. 7:10-10.10(6)a1]	IC	
For this permit to remain valid, each physical connection installation backflow prevention valve listed on this permit shall be dismantled and internally inspected annually within six months prior to the submission of an application for permit renewal pursuant to N.J.A.C. 7:10-10.5(b). After reassembly, the owner of the facility shall have the backflow prevention device tested for tightness to ensure integrity of the device. An internal inspection shall consist of the dismantling of a double check valve assembly or reduced pressure zone backflow preventer assembly to visually inspect the integrity of the internal mechanism including the clappers, discs, springs and facing rings pursuant to N.J.A.C. 7:10-10.6(a)2. [N.J.A.C. 7:10-10.10(6)a2]	IC	Lyle Blevins of Pan Metro tested the device on 4/16/03, 7/16/03, 10/30/03 and 2/12/04.

n Compliance
Out of Compliance
- Not Inspected
NC - No Obvious Concern
H - Heading
N - No

ND - Compliance Not Determined
NA - Not Applicable
PV - Potential Violation
ON - Out of Compliance, Non-referred
Y - Yes
DC - Data Collection

Requirement	Status	Results/Comments
Subject Item: WLOP - Water - Licensed Operator Requirements		
Did the licensed operator ensure that health and safety measures related to the O&M procedures are followed by the licensee, employee and agents of the system so as to protect human health, safety, welfare and the environment? . [N.J.A.C. 7:10A-1.12(a)2v]	IC	
Did the licensed operator conduct inspections of the system(s) and appurtenances in accordance with the schedule specified in the O&M procedures, and as otherwise indicated by operating requirements, and/or directed by the Department?. [N.J.A.C. 7:10A- 1.12(a)3]	H	IC-Daily and Monthly inspections are conducted.
Did the inspections ensure that the system is operated and maintained properly and complies with all, laws, rules, regulations, license conditions and orders relating to this chapter?. [N.J.A.C. 7:10A- 1.12(a)3i]	IC	
Were the results of all mechanical equipment and appurtenance inspections essential to the proper O&M of the system either recorded in ink and maintained in bound inspection log books or maintained in secure-access computer databases or files or other equivalent method of recordkeeping? . [N.J.A.C. 7:10A- 1.12(a)3ii]	IC	
Is the licensed operator familiar with and did he or she ensure compliance with all laws, rules, regulations, license conditions and orders relating to this chapter?. [N.J.A.C. 7:10A- 1.12(a)4]	IC	
Were system records, current permits, written O&M procedures, log books, computer databases or files or other equivalent records, pertinent documents and correspondence made available upon request by the Department or other controlling agency, and kept in a safe and secure area for a period of five years?. [N.J.A.C. 7:10A- 1.12(a)5]	IC	
he licensed operator immediately report any system deficiencies, breaks, kdowns, problems, bypasses, pump failures, occurrences, emergencies, complaints ./or intervening factors within the system that result in or necessitate deviation from the routine O&M procedures and any situations that have the potential to affect public health, safety, welfare, or the environment or have the potential to violate any permits, regulations, or laws relating to this chapter, as required by the regulations.. [N.J.A.C. 7:10A- 1.12(b)]	IC	Rotamine dye tests are reported in advance.
Subject Item: WQSW - Water - Pre-NJEMS Surface Water Permit		
DISCHARGE REQUIREMENTS.	H	
Were any and all outfall pipes tagged?.[N.J.A.C. 7:14A- 6.2(a)9]	IC	Outfall tags have been replaced with new ones.
Did the permittee develop a Capacity Assurance Program if its flow reached or exceeded 80% of the committed flow?.[N.J.A.C. 7:14A-22.16(a)]	NA	
REPORTING.	H	
Did the permittee complete monitoring reports in accordance with the current Discharge Monitoring Report Manual and any updates?.[N.J.A.C. 7:14A- 6.2(a)1]	IC	

n Compliance
- Out of Compliance
NI - Not Inspected
NC - No Obvious Concern
H - Heading
ND - Compliance Not Determined
NA - Not Applicable
PV - Potential Violation
ON - Out of Compliance, Non-referred
Y - Yes

920980543

N19993427 Copy
Hudson
Hudson

State of New Jersey

Department of Environmental Protection

Christine Todd Whitman
Governor

Robert C. Shinn, Jr.
Commissioner

March 2, 2000

Mr. R. Edwin Selover
Public Service Electric and Gas Company
80 Park Plaza
Mail Code T5A
Newark, NJ 07101

BJB000105

Re:		
	TYPE OF APPLICATION:	LNA Application
	TRANSACTION:	*Corporate Reorganization*
	NAME:	Public Service Electric and Gas Company
	ADDRESS:	See Attached for a List of Affected Sites
	SIC:	49
	APPLICATION NO:	See Attached for Corresponding Case Numbers

Dear Mr. Selover:

This is in response to your application received October 7, 1999, and supplements thereto, concerning the applicability of the Industrial Site Recovery Act (ISRA) to the above referenced establishment. On the basis of the sworn statements set forth in the affidavit signed by R. Edwin Selover, Bernhard Metzger and Richard A. Blackman, the Department finds that this transaction is not subject to the provisions of ISRA.

This decision is made in light of the absence of a transaction covered by the Act, specifically a corporate reorganization not substantially affecting the ownership of the Industrial Establishment. Any inaccuracies in the affidavit or subsequent changes in the facts as stated therein could alter the Department's determination.

Please be advised, this determination is issued conditioned on the receipt of an irrevocable letter of credit in the amount of $37 million in a form acceptable to the Department. The letter of credit will serve to demonstrate that sufficient assets are available to remediate the above referenced industrial establishments pursuant to N.J.A.C. 7:26B-2.2(c)ii.

The inapplicability of the Industrial Site Recovery Act to this transaction does not relieve the above referenced establishment of any responsibilities under any other environmental statutes, regulations or permits. In addition, this determination of ISRA inapplicability does not constitute any finding by the New Jersey Department of Environmental Protection as to the current site condition or existence or nonexistence of any hazards to the environment at this location.

Should you have any further questions regarding this matter, please contact Jim Bono at (609) 777-0899.

Sincerely,

James J. Bono

James J. Bono, Supervisor
Applicability Unit

New Jersey is an Equal Opportunity Employer
Recycled Paper

920980544

ATTACHMENT

N19993416	Yards Creek Pumped-Storage Hydroelectric Generating Station
N19993419	Sewaren Generating Station
N19993420	Salem Generating Station
N19993421	Nuclear Training Center
N19993422	National Park Generating Station
N19993423	Mercer Generating Station
N19993424	Maplewood Testing Laboratory
N19993425	Linden Generating Station
N19993426	Kearny Generating Station
N19993427	Hudson Generating Station
N19993428	Hope Creek Generating Station
N19993429	Essex Generating Station
N19993430	Edison Generating Station
N19993431	Central Maintenance Shop
N19993432	Burlington Generating Station
N19993433	Bergen Generating Station
N19993434	Bayonne Generating Station

920980545

Transaction Type

1 - Sale of Property
2 - Sale of Business
3 - Business Ceasing Oper
4 - Refinancing
5 - Sale of Stock in Corp
6 - Condemnation
7 - Bankruptcy
8 - Corporate Merger
9 - Prtnrshp Situation Change
10 - Intra Family
11 - Corporate Reorg
12 - Sale of Assets
13 - Other
14 - Sale of Prop. & Business
15 - Sale of Prop. & Cessation

CASE #N99 3427

DATE REC'D: OCT - 7 1999

TRANSACTION TYPE:

SIC #:

HAZARDOUS SUBSTANCE:

SUBJECT (YES / NO)

CONTACT: Jim

LETTER #:

INSPECT.: YES /.NO # OF SITES

DATE OF INSPECTION: / /

SUPPLEMENTAL INFO DATE: / /

DEFICIENT: (YES / NO): LETTER #:

CHRONOLOGY OF EVENTS FOR LNA INVESTIGATION

DATE	SUMMARY

920980546

02/98

NEW JERSEY DEPARTMENT OF ENVIRONMENTAL PROTECTION
INDUSTRIAL SITE EVALUATION ELEMENT
P.O.BOX 432, TRENTON, NJ 08625-0432

INDUSTRIAL SITE RECOVERY ACT (ISRA)

APPLICABILITY/NONAPPLICABILITY AFFIDAVIT

The purpose of this Affidavit is to obtain an Applicability/Nonapplicability Determination from the New Jersey Department of Environmental Protection pursuant to the Industrial Site Recovery Act, N.J.S.A. 13:1K-6 et seq. Fee is $200.00. Please make checks payable to "TREASURER, STATE OF NEW JERSEY".

NOTE: *All sections of this application shall be completed or it will be returned.*

PLEASE TYPE OR PRINT

Date October 1, 1999

A. Determination of Applicability/Nonapplicability should be mailed to the following:

Name (Mr./Mrs./Ms.) Mr. R. Edwin Selover, Esq.
Company Public Service Electric and Gas Company
Address 80 Park Plaza, Mail Code T5A
City or Town Newark County Essex
State New Jersey Zip Code 07101 Tele. No. (973) 430-6450

B. Name of Business Hudson Generating Station
Standard Industrial Classification (SIC) Number 49 (Group Number)

C. Property Location for which request is being transmitted:

Street Address: Duffield and Van Keuren Avenues
Tax Block(s) 681 Tax Lot(s): 3 through 10,12,17 through 21
Tax Block(s) 1200 Tax Lot(s): 45.2, 47 through 51, 59 through 69, 73 through 77
Tax Block(s) 3 Tax Lot(s): 7
Tax Block(s) 7 Tax Lot(s): 3, 5 and 6
Municipality: City of Jersey City County Hudson
State New Jersey Zip Code 07306

920980547

D. Transaction for which the Applicability/Nonapplicability Determination is requested: *(Check appropriate transaction)* * Please attach a detailed description of these transactions.

1. ___ Sale of Property
2. ___ Sale of Business
3. ___ Business Ceasing Operations
4. ___ Refinancing/Construction Loan
5. ___ Sale of Stock in Corporation*
6. ___ Condemnation
7. ___ Bankruptcy
8. ___ Corporate Merger*
9. ___ Partnership Situation Change*
10. ___ Intra Family
11. _X_ Corporate Reorganization
12. ___ Sale of Assets

___ Other: *(Explain)* _____

Date of Planned Transaction: December 22, 1999

Purchaser:
Name PSEG Power LLC
Address 80 Park Plaza
City or Town Newark County Essex
State New Jersey Zip Code 07101

E. Operations:

1.) The property owner and/or operator must completely describe in detail the operations and processes conducted at the site including a list of all tenants, their operations and processes, occupying any part of the property since December 31, 1983. *(Attach additional sheets, if necessary.)*

See Section 2 of the Hudson Generating Station Assessment in Exhibit B for a complete description of the operations and processes conducted at the Hudson Generating Station.

2.) If the property described above is vacant land, does the owner described in F below own contiguous property. __ Yes __ No (If yes, please describe onsite operations.)
Not Applicable

F. Current Owner of the Property for which an Applicability/Nonapplicability Determination is requested:

Name Public Service Electric and Gas Company
Street Address 80 Park Plaza Municipality City of Newark
State New Jersey Zip Code 07101 Tele No. (973) 430-7000

G. History:

1. Previous Owners and history of on-site operations since December 31, 1983. *(Attach additional sheets, if necessary.)*

Name	Address	Date/Operations
The Public Service Electric and Gas Company has been the owner and operator of the Hudson Generating Station since before December 31, 1983.		

2. Is this site currently or has this site previously been the subject of any other ECRA or ISRA review?

___ Yes X No If yes, please provide case number

H. Hazardous Substances or Wastes: (This information is only required if the facility or business has a subject SIC.)

List all types and quantities of hazardous substances and hazardous wastes as defined at N.J.A.C. 7:1E-1.7 and N.J.A.C. 7:26-1.6 respectively, including but not limited to petroleum products, that are generated, manufactured, refined, transported, treated, stored, handled or disposed at the property, both above and below ground.

See Section 2 of the Hudson Generating Station Assessment in Exhibit B for a list of all types and quantities of hazardous substances and hazardous wastes that are generated, transported, stored, or handled at the Hudson Generating Station. Hazardous substances and hazardous wastes have not been manufactured, refined, or disposed of at the Hudson Generating Station.

I. How is the building(s) heated? *(Oil, Gas, Electric)* If Oil, how many tanks? ____
Storage capacity of each _____ Above or below ground _____

J. Was the building(s) ever heated by oil? X Yes __ No If so, when? Circa 1984

CERTIFICATION:

The following certification shall be signed by a duly authorized person pursuant to the requirements of N.J.A.C. 7:26B-1.6(e) as follows.

a. For a corporation, by a principal executive officer of at least the level of vice president;
b. For a partnership or sole proprietorship, by a general partner or the proprietor, respectively; or
c. For a municipality, State, Federal or other public agency, by either a principal executive officer or ranking elected official.

I certify under penalty of law that I have personally examined and am familiar with the information submitted in this application and all attached documents, and that based on my inquiry of those individuals immediately responsible for obtaining the information, to the best of my knowledge the submitted information is true, accurate and complete. I am aware that there are significant civil penalties for knowingly submitting false, inaccurate, or incomplete information and that I am committing a crime of the fourth degree if I make a written false statement which I do not believe to be true. I am also aware that if I knowingly direct or authorize the violation of N.J.S.A. 13:1K-6 et seq., I am personally liable for the penalties set forth at N.J.S.A. 13:1K-13.

SEE ATTACHED CERTIFICATION

Typed/Printed Name_____Title_____
Signature _____ Date_____

Sworn to and Subscribed Before Me

on this _____

Date of _____ 19_____

_____
Notary

Have you enclosed a check or money order for $200? _X_ Yes ___ No

Check Number 4000032096

Have you included the original signature of the owner or operator? _X_ Yes __No

Has the certification been properly notarized? _X_ Yes ___ No

CERTIFICATION
Pursuant to N.J.A.C. 7:26B-1.6(e)

Hudson Generating Station

Based on the certification of Bernhard Metzger, Ph.D. on behalf of Arthur D. Little, Inc. dated September 28, 1999 (attached hereto as Exhibit A) and the certification of Richard A. Blackman, P.E. dated September 29, 1999 (attached hereto as Exhibit B), I certify under penalty of law that I have personally examined and am familiar with the information submitted in this application and all attached documents, and that based on my inquiry of those individuals immediately responsible for obtaining the information, to the best of my knowledge the submitted information is true, accurate and complete. I am aware there are significant penalties for knowingly submitting false, inaccurate or incomplete information and that I am committing a crime of the fourth degree if I make a written false statement which I do not believe to be true. I am also aware that if I knowingly direct or authorize the violation of N.J.S.A. 13:1K-6 *et seq.*, I am personally liable for the penalties set forth at N.J.S.A. 13:1K-13.

Name: R. Edwin Selover, Esq. Title: Senior Vice President and General Counsel

Signature: R. Edwin Selover Date: 10/1/99

Sworn and Subscribed Before Me
On this 1st
Date of October, 1999
Dorothia Jennings-Hope
Notary

DORETHIA JENNINGS-HOPE
A Notary Public of New Jersey
My Commission Expires July 16, 2001

920980551

CERTIFICATION
Pursuant to N.J.A.C. 7:26B-1.6(e)

Hudson Generating Station

"EXHIBIT A"

Regarding the Application for an Applicability Determination for this facility:

"Arthur D. Little, Inc. certifies based upon knowledge and belief and under penalty of law, that the information provided in this document is true, accurate and complete. Arthur D. Little, Inc. is aware that there are significant civil penalties for knowingly submitting false, inaccurate or incomplete information, and that it is a crime of the fourth degree for making a written false statement that is not believed to be true. Arthur D. Little, Inc. is also aware that, if we knowingly direct or authorize the violation of any statute, there may be personal liability for the penalties."

ARTHUR D. LITTLE, INC.

Name: Bernhard Metzger, Ph.D/

Signature
On behalf of Arthur D. Little, Inc.

Title: Vice President

9/28/99
Date

Sworn to and subscribed to me on this 28th day of September 1999.

Signature of Notary Public
(Stamp and Seal/Commission Date)

Arthur D Little

920980552

CERTIFICATION
Pursuant to N.J.A.C. 7:26B-1.6(e)

Hudson Generating Station

"EXHIBIT B"

Based on the certification of Bernhard Metzger, Ph.D. on behalf of Arthur D. Little, Inc. dated September 28, 1999 (attached hereto as Exhibit A) and information obtained in connection with my status as Project Manager for the preparation of the Application for Applicability Determination for this facility:

"I certify under penalty of law, that the information provided in this document is true, accurate and complete. I am aware that there are significant civil penalties for knowingly submitting false, inaccurate or incomplete information, and that I am committing a crime of the fourth degree if I make a written false statement that I do not believe to be true. I am also aware that, if I knowingly direct or authorize the violation of any statute, I am personally liable for the penalties."

PUBLIC SERVICE ELECTRIC AND GAS COMPANY

Name: Richard A Blackman, P.E. Title: Project Manager

Signature Date 9/29/99

Sworn to and subscribed to me on this 29th day of September 1999.

Signature of Notary Public
(Stamp and Seal/Commission Date)

JUNE BARNETT
NOTARY PUBLIC OF NEW JERSEY
Commission Expires 7/31/2003

920980553

920980554

U.S. Environmental Protection Agency

Envirofacts Data Warehouse

MultiSystem Report

Report an Error

Envirofacts

PSE&G HUDSON GENERATING STATION
DUFFIELD AVENUE & VAN KEUREN AVENUE
JERSEY CITY, NJ 07306

Map this facility

EPA Facility Information

This query was executed on JUN-24-2005

Toxic Releases for Reporting Year 2003

TRI FACILITY ID: 07306HDSNGDUFFI

SIC Codes for 2003

SIC CODE	SIC CODE DESCRIPTION
4911	ELECTRIC SERVICES

BJB000124

Chemicals Transferred to other Sites

CHEMICAL NAME	TRI CHEM ID	DOCUMENT	RELEASE AMOUNTS LBS/YR	RELEASE BASIS CODE	TYPE OF WASTE MANAGEMENT	TRANSFER SITE NAME	TRAN SITE
AMMONIA	007664417	1303202063780	250	OTHER	OTHER TREATMENT	CLEAN HARBORS OF BALTIMORE	BALTI
ARSENIC COMPOUNDS	N020	1303201359724	250	OTHER		NEW JERSEY MEADOWLANDS COMMISSION	LYNDI
ARSENIC COMPOUNDS	N020	1303201359724	250	OTHER		ATLANTIC WASTE DISPOSAL	WAVE
BARIUM COMPOUNDS	N040	1303201359736	250	OTHER		NEW JERSEY MEADOWLANDS	LYNDI

920980555

						COMMISSION	
BARIUM COMPOUNDS	N040	1303201359736	13000	OTHER		ATLANTIC WASTE DISPOSAL	WAVE
CHROMIUM COMPOUNDS (EXCEPT CHROMITE ORE MINED IN THE TRANSVAAL REGION)	N090	1303201359751	5	OTHER		CLEAN HARBORS OF BALTIMORE	BALTI
CHROMIUM COMPOUNDS (EXCEPT CHROMITE ORE MINED IN THE TRANSVAAL REGION)	N090	1303201359751	250	OTHER		NEW JERSEY MEADOWLANDS COMMISSION	LYNDI
CHROMIUM COMPOUNDS (EXCEPT CHROMITE ORE MINED IN THE TRANSVAAL REGION)	N090	1303201359751	1900	OTHER		ATLANTIC WASTE DISPOSAL	WAVE
COPPER COMPOUNDS	N100	1303201359763	250	OTHER		NEW JERSEY MEADOWLANDS COMMISSION	LYNDI
COPPER COMPOUNDS	N100	1303201359763	2300	OTHER		ATLANTIC WASTE DISPOSAL	WAVE
LEAD COMPOUNDS	N420	1303201359813	58.1	OTHER		NEW JERSEY MEADOWLANDS COMMISSION	LYNDI
LEAD COMPOUNDS	N420	1303201359813	461.5	OTHER		ATLANTIC WASTE DISPOSAL	WAVE
MANGANESE COMPOUNDS	N450	1303202063792	250	OTHER		NEW JERSEY MEADOWLANDS COMMISSION	LYNDI
MANGANESE COMPOUNDS	N450	1303202063792	1700	OTHER		ATLANTIC WASTE DISPOSAL	WAVE
MERCURY COMPOUNDS	N458	1303201359837	.3	OTHER		NEW JERSEY MEADOWLANDS COMMISSION	LYNDI
NICKEL COMPOUNDS	N495	1303201359849	250	OTHER		NEW JERSEY MEADOWLANDS COMMISSION	LYNDI
NICKEL COMPOUNDS	N495	1303201359849	2000	OTHER		ATLANTIC WASTE DISPOSAL	WAVE

VANADIUM COMPOUNDS	N770	1303201359888	3900	OTHER		ATLANTIC WASTE DISPOSAL	WAVE
ZINC COMPOUNDS	N982	1303201359890	250	OTHER		NEW JERSEY MEADOWLANDS COMMISSION	LYNDI
ZINC COMPOUNDS	N982	1303201359890	1700	OTHER		ATLANTIC WASTE DISPOSAL	WAVE

Chemicals Released to Air

CHEMICAL NAME	TRI CHEM ID	DOCUMENT	RELEASE AMOUNTS LBS/YR	RELEASE BASIS CODE	FUGITIVE OR STACK INDICATOR
AMMONIA	007664417	1303202063780	5	OTHER	FUGITIVE OR NON-POINT EMISSIONS
AMMONIA	007664417	1303202063780	19000	MONITORING DATA	STACK OR POINT EMISSIONS
ARSENIC COMPOUNDS	N020	1303201359724	5	OTHER	FUGITIVE OR NON-POINT EMISSIONS
ARSENIC COMPOUNDS	N020	1303201359724	250	PUBLISHED EMISSION FACTORS	STACK OR POINT EMISSIONS
BARIUM COMPOUNDS	N040	1303201359736	5	OTHER	FUGITIVE OR NON-POINT EMISSIONS
BARIUM COMPOUNDS	N040	1303201359736	750	PUBLISHED EMISSION FACTORS	STACK OR POINT EMISSIONS
BENZO(G,H,I)PERYLENE	000191242	1303201359748	6.5	PUBLISHED EMISSION FACTORS	STACK OR POINT EMISSIONS
CHROMIUM COMPOUNDS (EXCEPT CHROMITE ORE MINED IN THE TRANSVAAL REGION)	N090	1303201359751	250	OTHER	FUGITIVE OR NON-POINT EMISSIONS
CHROMIUM COMPOUNDS (EXCEPT CHROMITE ORE MINED IN THE TRANSVAAL REGION)	N090	1303201359751	250	PUBLISHED EMISSION FACTORS	STACK OR POINT EMISSIONS
COPPER COMPOUNDS	N100	1303201359763	5	OTHER	FUGITIVE OR NON-POINT EMISSIONS
COPPER COMPOUNDS	N100	1303201359763	250	PUBLISHED EMISSION FACTORS	STACK OR POINT EMISSIONS
DIOXIN AND DIOXIN-LIKE COMPOUNDS	N150	1303201359775	.321	PUBLISHED EMISSION FACTORS	STACK OR POINT EMISSIONS
HYDROCHLORIC ACID (1995					FUGITIVE OR

AND AFTER "ACID AEROSOLS" ONLY)	007647010	1303201359799	5	OTHER	NON-POINT EMISSIONS
HYDROCHLORIC ACID (1995 AND AFTER "ACID AEROSOLS" ONLY)	007647010	1303201359799	2700000	OTHER	STACK OR POINT EMISSIONS
HYDROGEN FLUORIDE	007664393	1303201359801	5	OTHER	FUGITIVE OR NON-POINT EMISSIONS
HYDROGEN FLUORIDE	007664393	1303201359801	95000	PUBLISHED EMISSION FACTORS	STACK OR POINT EMISSIONS
LEAD COMPOUNDS	N420	1303201359813	9.5	OTHER	FUGITIVE OR NON-POINT EMISSIONS
LEAD COMPOUNDS	N420	1303201359813	217.2	PUBLISHED EMISSION FACTORS	STACK OR POINT EMISSIONS
MANGANESE COMPOUNDS	N450	1303202063792	250	OTHER	FUGITIVE OR NON-POINT EMISSIONS
MANGANESE COMPOUNDS	N450	1303202063792	250	PUBLISHED EMISSION FACTORS	STACK OR POINT EMISSIONS
MERCURY COMPOUNDS	N458	1303201359837	43.2	MONITORING DATA	STACK OR POINT EMISSIONS
NICKEL COMPOUNDS	N495	1303201359849	250	OTHER	FUGITIVE OR NON-POINT EMISSIONS
NICKEL COMPOUNDS	N495	1303201359849	3700	PUBLISHED EMISSION FACTORS	STACK OR POINT EMISSIONS
PENTACHLOROBENZENE	000608935	1303201359852	30	PUBLISHED EMISSION FACTORS	STACK OR POINT EMISSIONS
POLYCYCLIC AROMATIC COMPOUNDS	N590	1303201359864	.1	OTHER	FUGITIVE OR NON-POINT EMISSIONS
POLYCYCLIC AROMATIC COMPOUNDS	N590	1303201359864	217.4	PUBLISHED EMISSION FACTORS	STACK OR POINT EMISSIONS
SULFURIC ACID (1994 AND AFTER "ACID AEROSOLS" ONLY)	007664939	1303201359876	5	OTHER	FUGITIVE OR NON-POINT EMISSIONS
SULFURIC ACID (1994 AND AFTER "ACID AEROSOLS" ONLY)	007664939	1303201359876	170000	PUBLISHED EMISSION FACTORS	STACK OR POINT EMISSIONS
VANADIUM COMPOUNDS	N770	1303201359888	5	OTHER	FUGITIVE OR NON-POINT EMISSIONS
VANADIUM COMPOUNDS	N770	1303201359888	750	PUBLISHED EMISSION FACTORS	STACK OR POINT EMISSIONS

ZINC COMPOUNDS	N982	1303201359890	5	OTHER	FUGITIVE OR NON-POINT EMISSIONS
ZINC COMPOUNDS	N982	1303201359890	750	PUBLISHED EMISSION FACTORS	STACK OR POINT EMISSIONS

Chemicals Released to the Land Surface

CHEMICAL NAME	CAS	DOCUMENT	RELEASE AMOUNTS LBS/YR	RELEASE BASIS CODE	LAND DISPOSAL
AMMONIA	007664417	1303202063780	1900	OTHER	OTHER DISPOSAL
ARSENIC COMPOUNDS	N020	1303201359724	4000	OTHER	OTHER DISPOSAL
BARIUM COMPOUNDS	N040	1303201359736	21000	OTHER	OTHER DISPOSAL
CHROMIUM COMPOUNDS (EXCEPT CHROMITE ORE MINED IN THE TRANSVAAL REGION)	N090	1303201359751	3900	OTHER	OTHER DISPOSAL
COPPER COMPOUNDS	N100	1303201359763	5000	OTHER	OTHER DISPOSAL
LEAD COMPOUNDS	N420	1303201359813	2913	OTHER	OTHER DISPOSAL
MANGANESE COMPOUNDS	N450	1303202063792	6900	OTHER	OTHER DISPOSAL
MERCURY COMPOUNDS	N458	1303201359837	39	OTHER	OTHER DISPOSAL
NICKEL COMPOUNDS	N495	1303201359849	2800	OTHER	OTHER DISPOSAL
VANADIUM COMPOUNDS	N770	1303201359888	7700	OTHER	OTHER DISPOSAL
ZINC COMPOUNDS	N982	1303201359890	6200	OTHER	OTHER DISPOSAL

Chemicals Released to Surface Water

CHEMICAL NAME	TRI CHEM ID	DOCUMENT	RELEASE AMOUNTS LBS/YR	RELEASE BASIS CODE	STORM WATER APPLICABILITY FLAG	STORM WATER PERCENTAGE
AMMONIA	007664417	1303202063780	250	OTHER	0	0
ARSENIC COMPOUNDS	N020	1303201359724	5	OTHER	0	0
BARIUM COMPOUNDS	N040	1303201359736	5	OTHER	0	0
CHROMIUM COMPOUNDS (EXCEPT CHROMITE ORE MINED IN THE TRANSVAAL REGION)	N090	1303201359751	750	OTHER	0	0

COPPER COMPOUNDS	N100	1303201359763	750	OTHER	0	0
LEAD COMPOUNDS	N420	1303201359813	.9486132	OTHER	0	0
MANGANESE COMPOUNDS	N450	1303202063792	250	OTHER	0	0
MERCURY COMPOUNDS	N458	1303201359837	.0026458	OTHER	0	0
NICKEL COMPOUNDS	N495	1303201359849	750	OTHER	0	0
VANADIUM COMPOUNDS	N770	1303201359888	.2591412	OTHER	0	0
ZINC COMPOUNDS	N982	1303201359890	250	OTHER	0	0

Chemicals Released via Underground Injection

There was no data of this type reported for this facility.

Additional Information can be obtained from the Toxics Release Inventory System [TRIS] Query.

Water Discharge Permit Information (PCS)

NPDES: NJ0000647
SIC CODE: 4911 **SIC DESCRIPTION:** ELECTRIC SERVICES

This facility has permits to discharge the following chemical/substances through the points (pipes) listed in the table below:

PARAMETER CODE	PARAMETER DESCRIPTION	NUMBER OF DISCHARGE POINTS
00010	TEMPERATURE, WATER DEG. CENTIGRADE	5
00015	THERMAL DISCHARGE MILLION BTUS PER HR.	1
00400	PH	5
00530	SOLIDS, TOTAL SUSPENDED	3
00680	CARBON, TOT ORGANIC (TOC)	1
01042	COPPER, TOTAL (AS CU)	1
01045	IRON, TOTAL (AS FE)	1
01074	NICKEL TOTAL RECOVERABLE	1
01094	ZINC TOTAL RECOVERABLE	1
45501	PETROL HYDROCARBONS,TOTAL RECOVERABLE	2
50050	FLOW, IN CONDUIT OR THRU TREATMENT PLANT	8
70295	SOLIDS, TOTAL DISSOLVED	1
TAN3E	LC50 STATRE 96HR ACU MYSID. BAHIA	1

Additional Information can be obtained from Water Discharge Permit Infomation [PCS] Query.

Water Discharge Permit Information (PCS)

NPDES: NJ0120324
SIC CODE: **SIC DESCRIPTION:**

The current PCS database does not have permitted discharge data for this facility.

Additional Information can be obtained from Water Discharge Permit Infomation [PCS] Query.

AIRS / AFS Information

PLANT NAME:	PSE&G HUDSON GENERATING STATION	**COMPLIANCE SYSTEM PLANT ID:**	00004
AFS PLANT ID:	00004	**NATIONAL EMISSIONS DATA SYSTEM PLANT ID:**	0021
LATITUDE:	0	**LONGITUDE:**	0
DUNS NUMBER:	094961042	**PRINCIPAL PRODUCT:**	ELECTRICITY
INVENTORY YEAR:	90	**EMERGENCY CONTROL:**	ECAP not required
CLASS CODE:	ACTUAL OR POTENTIAL EMISS ARE ABOVE THE APPLICABLE MAJOR SOURCE THRESHOLD.	**COMPLIANCE STATUS:**	MEETING COMPLIANCE SCHEDULE

The current AIRS/AFS database does not have any pollutant data for this facility.

RCRAInfo

HANDLER ID: NJD094961042

LIST OF NAICS CODES AND DESCRIPTIONS

NAICS CODE	NAICS DESCRIPTION
2211	Electric Power Generation, Transmission and Distribution
221112	Fossil Fuel Electric Power Generation

HANDLER / FACILITY CLASSIFICATION

920980561

HANDLER TYPE
Large Generator
Subject Non-TSD

LIST OF PROCESS UNIT INFORMATION FOR GROUP TANK

PROCESS CODE / DESCRIPTION	LEGAL OPERATING STATUS	UNIT OF MEASUREMENT TYPE / DESCRIPTION	CAPACITY TYPE / DESCRIPTION	QUANTITY	CAPACITY	EFFECTIVE DATE
S02 - TANK STORAGE	NEVER REGULATED AS A TSD - PROTECTIVE FILER	G - GALLONS	D - DESIGN	2	1300000	19-NOV-80

LIST OF PROCESS UNIT INFORMATION FOR GROUP TANKTRT

PROCESS CODE / DESCRIPTION	LEGAL OPERATING STATUS	UNIT OF MEASUREMENT TYPE / DESCRIPTION	CAPACITY TYPE / DESCRIPTION	QUANTITY	CAPACITY	EFFECTIVE DATE
T01 - TANK TREATMENT	NEVER REGULATED AS A TSD - PROTECTIVE FILER	U - GALLONS PER DAY	D - DESIGN	2	4723200	19-NOV-80

Additional Information can be obtained from Resource Conservation and Recovery Information Query. RCRAInfo

920980562

920980563

10-K 1 a39290.htm PUBLIC SERVICE ELECTRIC AND GAS COMPANY

UNITED STATES
SECURITIES AND EXCHANGE COMMISSION
WASHINGTON, D.C. 20549

FORM 10-K

(Mark One)

☒ **ANNUAL REPORT PURSUANT TO SECTION 13 OR 15(d) OF THE SECURITIES EXCHANGE ACT OF 1934**

FOR THE FISCAL YEAR ENDED DECEMBER 31, 2004,

OR

☐ **TRANSITION REPORT PURSUANT TO SECTION 13 OR 15(d) OF THE SECURITIES EXCHANGE ACT OF 1934**

FOR THE TRANSITION PERIOD FROM TO .

Commission File Number	Registrants, State of Incorporation, Address, and Telephone Number	I.R.S. Employer Identification No.
001-09120	PUBLIC SERVICE ENTERPRISE GROUP INCORPORATED (A New Jersey Corporation) 80 Park Plaza, P.O. Box 1171 Newark, New Jersey 07101-1171 973 430-7000 http://www.pseg.com	22-2625848
001-00973	PUBLIC SERVICE ELECTRIC AND GAS COMPANY (A New Jersey Corporation) 80 Park Plaza, P.O. Box 570 Newark, New Jersey 07101-0570 973 430-7000 http://www.pseg.com	22-1212800
000-49614	PSEG POWER LLC (A Delaware Limited Liability Company) 80 Park Plaza—T25 Newark, New Jersey 07102-4194 973 430-7000 http://www.pseg.com	22-3663480
000-32503	PSEG ENERGY HOLDINGS LLC (A New Jersey Limited Liability Company)	42-1544079

BCA000129

920980564

80 Park Plaza—T20
Newark, New Jersey 07102-4194
973 456-3581
http://www.pseg.com

Securities registered pursuant to Section 12(b) of the Act:

Registrant	Title of Each Class	Name of Each Exchange On Which Registered
Public Service Enterprise Group Incorporated	Common Stock without par value	New York Stock Exchange

Participating Equity Preference Securities (consisting of a Purchase Contract and a Preferred Trust Security), $50 par value at 10.25%, issued by PSEG Funding Trust I (Registrant) and registered on the New York Stock Exchange.

Trust Originated Preferred Securities (Guaranteed Preferred Beneficial Interest in PSEG's Debentures), $25 par value at 8.75%, issued by PSEG Funding Trust II (Registrant) and registered on the New York Stock Exchange.

Registrant	Title of Each Class	Title of Each Class			Name of Each Exchange On Which Registered
Public Service Electric and Gas Company	***Cumulative Preferred Stock $100 par value Series:***	***First and Refunding Mortgage Bonds:***	***Series***	***Due***	
	4.08%	9¼%	BB	2005	
	4.18%	9¼%	CC	2021	
	4.30%	6¾%	UU	2006	New York Stock Exchange
	5.05%	6¾%	VV	2016	
	5.28%	6¼%	WW	2007	
		6¾%	YY	2023	
		8%		2037	
		5%		2037	

(Cover continued on next page)

(Cover continued from previous page)

Securities registered pursuant to Section 12(g) of the Act:

Registrant	Title of Class
Public Service Enterprise Group Incorporated	Floating Rate Capital Securities (Guaranteed Preferred Beneficial Interest in PSEG's Debentures), $1,000 par value issued by Enterprise Capital Trust II (Registrant), LIBOR plus 1.22%. Trust Originated Preferred Securities (Guaranteed Preferred Beneficial Interest in PSEG's Debentures), $25 par value at 7.44%, issued by Enterprise Capital Trust I (Registrant). Trust Originated Preferred Securities (Guaranteed Preferred Beneficial Interest in PSEG's Debentures), $25 par value at 7.25%, issued by Enterprise Capital Trust III (Registrant).
Public Service Electric and Gas Company	6.92% Cumulative Preferred Stock $100 par value Medium-Term Notes, Series A Medium-Term Notes, Series B Medium-Term Notes, Series C
PSEG Power LLC	Limited Liability Company Membership Interest
PSEG Energy Holdings LLC	Limited Liability Company Membership Interest

The aggregate market value of the Common Stock of Public Service Enterprise Group Incorporated held by non-affiliates as of June 30, 2004 was $9,313,972,867 based upon the New York Stock Exchange Composite Transaction closing price.

The number of shares outstanding of Public Service Enterprise Group Incorporated's sole class of Common Stock, as of the latest practicable date, was as follows:

Class	Outstanding at January 31, 2005
Common Stock, without par value	238,350,363

PSEG Power LLC and PSEG Energy Holdings LLC are wholly-owned subsidiaries of Public Service Enterprise Group Incorporated and meet the conditions set forth in General Instruction I(1)(a) and (b) of Form 10-K and are filing their respective Annual Reports on Form 10-K with the reduced disclosure format authorized by General Instruction I.

As of January 31, 2005, Public Service Electric and Gas Company had issued and outstanding 132,450,344 shares of Common Stock, without nominal or par value, all of which were privately held, beneficially and of record by Public Service Enterprise Group Incorporated.

Indicate by check mark whether the registrants (1) have filed all reports required to be filed by Section 13 or 15(d) of the Securities Exchange Act of 1934 during the preceding 12 months (or for such shorter period that the registrants were required to file such reports) and (2) have been subject to such filing requirements for the past 90 days. Yes ☒ No ☐

Indicate by check mark if disclosure of delinquent filers pursuant to Item 405 of Regulation S-K is not contained herein, and will not be contained, to the best of registrant's knowledge, in definitive proxy or information statements incorporated by reference in Part III of this Form 10-K or any amendment to

this Form 10-K. ☒

Indicate by check mark whether each registrant is an accelerated filer (as defined in Rule 12b-2 of the Exchange Act).

Public Service Enterprise Group Incorporated	Yes ☒	No ☐
Public Service Electric and Gas Company	Yes ☐	No ☒
PSEG Power LLC	Yes ☐	No ☒
PSEG Energy Holdings LLC	Yes ☐	No ☒

DOCUMENTS INCORPORATED BY REFERENCE

Part of Form 10-K of Public Service Enterprise Group Incorporated	Documents Incorporated by Reference
III	Portions of the definitive Proxy Statement for the 2005 Annual Meeting of Stockholders of Public Service Enterprise Group Incorporated, which definitive Proxy Statement is expected to be filed with the Securities and Exchange Commission on or about April 30, 2005, as specified herein.

TABLE OF CONTENTS

		Page
FORWARD-LOOKING STATEMENTS		1
WHERE TO FIND MORE INFORMATION		3
PART I		
Item 1.	Business	3
	General	
	PSEG, PSE&G, Power and Energy Holdings	3
	PSE&G	4
	Power	6
	Energy Holdings	10
	Regulatory Issues	15
	Segment Information	23
	Environmental Matters	24
Item 2.	Properties	29
Item 3.	Legal Proceedings	38
Item 4.	Submission of Matters to a Vote of Security Holders	42
PART II		
Item 5.	Market for Registrant's Common Equity and Related Stockholder Matters	43
Item 6.	Selected Financial Data	44
Item 7.	Management's Discussion and Analysis of Financial Condition and Results of Operations	45
	Overview of 2004 and Future Outlook	45
	Results of Operations	51
	Liquidity and Capital Resources	63
	Capital Requirements	73
	Off-Balance Sheet Arrangements	75
	Critical Accounting Estimates	75
Item 7A.	Qualitative and Quantitative Disclosures About Market Risk	79
Item 8.	Financial Statements and Supplementary Data	87
	Report of Independent Registered Public Accounting Firm	88
	Consolidated Financial Statements	93
	Notes to Consolidated Financial Statements	
	Note 1. Organization and Summary of Significant Accounting Policies	109
	Note 2. Recent Accounting Standards	116
	Note 3. Asset Retirement Obligations	123
	Note 4. Discontinued Operations, Dispositions and Acquisitions	125
	Note 5. Extraordinary Item	128
	Note 6. Asset Impairments	129
	Note 7. Regulatory Matters	129
	Note 8. Earnings Per Share	132
	Note 9. Goodwill and Other Intangibles	132
	Note 10. Long-Term Investments	134
	Note 11. Schedule of Consolidated Capital Stock and Other Securities	138
	Note 12. Schedule of Consolidated Debt	139
	Note 13. Risk Management	144
	Note 14. Commitments and Contingent Liabilities	147
	Note 15. Nuclear Decommissioning	159
	Note 16. Other Income and Deductions	161

Note 17. Income Taxes 163
Note 18. Pension, Other Postretirement Benefits (OPEB) and Savings Plans 168
Note 19. Stock Options and Employee Stock Purchase Plan 173
Note 20. Financial Information by Business Segments 175

920980569

		Page
	Note 21. Property, Plant and Equipment and Jointly-Owned Facilities	179
	Note 22. Selected Quarterly Data (Unaudited)	181
	Note 23. Related-Party Transactions	182
	Note 24. Guarantees of Debt	186
	Note 25. Merger Agreement	187
Item 9.	Changes In and Disagreements With Accountants on Accounting and Financial Disclosure	189
Item 9A.	Controls and Procedures	189
PART III		
Item 10.	Directors and Executive Officers of the Registrants	193
Item 11.	Executive Compensation	196
Item 12.	Security Ownership of Certain Beneficial Owners and Management	200
Item 13.	Certain Relationships and Related Transactions	201
Item 14.	Principal Accounting Fees and Services	202
PART IV		
Item 15.	Exhibits and Financial Statement Schedules	202
	Schedule II—Valuation and Qualifying Accounts	213
	Signatures	216
	Exhibit Index	220

920980570

FORWARD-LOOKING STATEMENTS

Certain of the matters discussed in this report constitute "forward-looking statements" within the meaning of the Private Securities Litigation Reform Act of 1995. Such forward-looking statements are subject to risks and uncertainties, which could cause actual results to differ materially from those anticipated. Such statements are based on management's beliefs as well as assumptions made by and information currently available to management. When used herein, the words "will," "anticipate," "intend," "estimate," "believe," "expect," "plan," "hypothetical," "potential," "forecast," "project," variations of such words and similar expressions are intended to identify forward-looking statements. Public Service Enterprise Group Incorporated (PSEG), Public Service Electric and Gas Company (PSE&G), PSEG Power LLC (Power) and PSEG Energy Holdings LLC (Energy Holdings) undertake no obligation to publicly update or revise any forward-looking statements, whether as a result of new information, future events or otherwise. The following review should not be construed as a complete list of factors that could effect forward-looking statements.

In addition to any assumptions and other factors referred to specifically in connection with such forward-looking statements discussed above, factors that could cause actual results to differ materially from those contemplated in any forward-looking statements include, among others, the following:

PSEG, PSE&G, Power and Energy Holdings

- credit, commodity, interest rate, counterparty and other financial market risks;
- liquidity and the ability to access capital and credit markets and maintain adequate credit ratings;
- adverse or unanticipated weather conditions that significantly impact costs and/or operations, including generation;
- changes in the electric industry, including changes to power pools;
- changes in the number of market participants and the risk profiles of such participants;
- changes in technology that may make power generation, transmission and/or distribution assets less competitive;
- availability of power transmission facilities that impact the ability to deliver output to customers;
- growth in costs and expenses;
- environmental regulations that significantly impact operations;
- changes in rates of return on overall debt and equity markets that could adversely impact the value of pension assets and liabilities and the Nuclear Decommissioning Trust Funds;
- ability to maintain satisfactory regulatory results;
- changes in political conditions, recession, acts of war or terrorism;
- continued availability of insurance coverage at commercially reasonable rates;
- involvement in lawsuits, including liability claims and commercial disputes;

- inability to attract and retain management and other key employees;
- acquisitions, divestitures, mergers, restructurings or strategic initiatives that change PSEG's, PSE&G's, Power's and Energy Holdings' structure;
- business combinations among competitors and major customers;
- general economic conditions, including inflation or deflation;
- regulatory issues that significantly impact operations;
- changes to accounting standards or accounting principles generally accepted in the U.S., which may require adjustments to financial statements;
- changes in tax laws and regulations;
- ability to service debt as a result of any of the aforementioned events;

PSE&G and Energy Holdings

- ability to obtain adequate and timely rate relief;

Power and Energy Holdings

- energy transmission constraints or lack thereof;
- adverse changes in the market for energy, capacity, natural gas, emissions credits, congestion credits and other commodity prices, especially during significant price movements for natural gas and power;
- surplus of energy capacity and excess supply;
- generation operating performance below projected levels;
- substantial competition in the worldwide energy markets;
- inability to effectively manage portfolios of electric generation assets, gas supply contracts and electric and gas supply obligations;
- margin posting requirements, especially during significant price movements for natural gas and power;
- availability of fuel and timely transportation at reasonable prices;
- effects on competitive position of actions involving competitors or major customers;
- changes in product or sourcing mix;
- delays, cost escalations or unsuccessful acquisitions, construction and development;

Power

- changes in regulation and safety and security measures at nuclear facilities;

Energy Holdings

- changes in political regimes in foreign countries;
- international developments negatively impacting business;
- changes in foreign currency exchange rates;
- substandard operating performance or cash flow from investments falling below projected levels, adversely impacting the ability to service project debt;
- deterioration in the credit of lessees and their ability to adequately service lease rentals; and
- ability to realize tax benefits.

Consequently, all of the forward-looking statements made in this report are qualified by these cautionary statements and PSEG, PSE&G, Power and Energy Holdings cannot assure you that the results or developments anticipated by management will be realized, or even if realized, will have the expected consequences to, or effects on, PSEG, PSE&G, Power and Energy Holdings or their respective business prospects, financial condition or results of operations. Undue reliance should not be placed on these forward-looking statements in making any investment decision. Each of PSEG, PSE&G, Power and Energy Holdings expressly disclaims any obligation or undertaking to release publicly any updates or revisions to these forward-looking statements to reflect events or circumstances that occur or arise or are anticipated to occur or arise after the date hereof. In making any investment decision regarding PSEG's, PSE&G's, Power's and Energy Holdings' securities, PSEG, PSE&G, Power and Energy Holdings are not making, and you should not infer, any representation about the likely existence of any particular future set of facts or circumstances. The forward-looking statements contained in this report are intended to qualify for the safe harbor provisions of Section 27A of the Securities Act of 1933, as amended, and Section 21E of the Securities Exchange Act of 1934, as amended.

WHERE TO FIND MORE INFORMATION

Public Service Enterprise Group Incorporated (PSEG), Public Service Electric and Gas Company (PSE&G), PSEG Power LLC (Power) and PSEG Energy Holdings LLC (Energy Holdings) file annual, quarterly and special reports, proxy statements and other information with the Securities and Exchange Commission (SEC). You may read and copy any document that PSEG, PSE&G, Power and Energy Holdings file at the Public Reference Room of the SEC at 450 Fifth Street, N.W., Washington, D.C. 20549. Information on the operation of the Public Reference Room may be obtained by calling the SEC at 1-800-SEC-0330. You may also obtain PSEG's, PSE&G's, Power's and Energy Holdings' filings on the Internet at the SEC's website at www.sec.gov or at PSEG's website, www.pseg.com. PSEG's Common Stock is listed on the New York Stock Exchange under the ticker symbol "PEG." You can obtain information about PSEG, PSE&G, Power and Energy Holdings at the offices of the New York Stock Exchange, 20 Broad Street, New York, New York 10005.

PART I

This combined Annual Report on Form 10-K is separately filed by PSEG, PSE&G, Power and Energy Holdings. Information contained herein relating to any individual company is filed by such company on its own behalf. PSE&G, Power and Energy Holdings each makes representations only as to itself and its subsidiaries and makes no other representations whatsoever as to any other company.

ITEM 1. BUSINESS

GENERAL

PSEG, PSE&G, Power and Energy Holdings

PSEG was incorporated under the laws of the State of New Jersey in 1985 and has its principal executive offices located at 80 Park Plaza, Newark, New Jersey 07102. PSEG is an exempt public utility holding company under the Public Utility Holding Company Act of 1935 (PUHCA).

PSEG has four principal direct wholly-owned subsidiaries: PSE&G, Power, Energy Holdings and PSEG Services Corporation (Services). The following organization chart shows PSEG and its principal subsidiaries, as well as the principal operating subsidiaries of Power: PSEG Fossil LLC (Fossil), PSEG Nuclear LLC (Nuclear) and PSEG Energy Resources & Trade LLC (ER&T); and of Energy Holdings: PSEG Global LLC (Global) and PSEG Resources LLC (Resources):

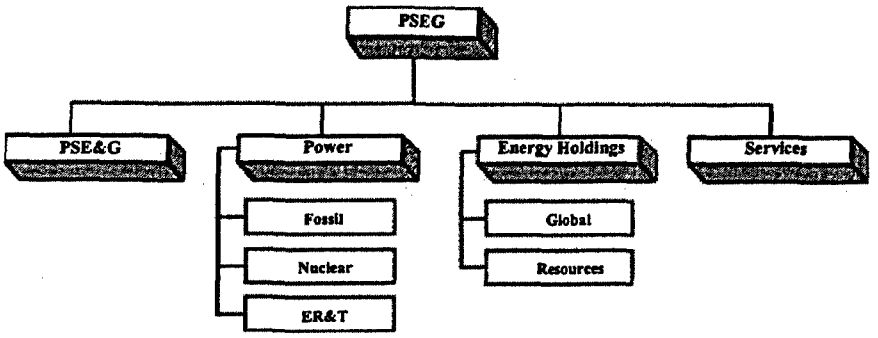

The regulatory structure that has historically governed the electric and gas utility industries in the United States (U.S.) has changed dramatically in recent years. Deregulation is complete in New Jersey and is complete or underway in certain other states in the Northeast and across the U.S. Actions by state regulators and the Federal Energy Regulatory Commission (FERC) and the implementation of the National Energy Policy Act of 1992 (Energy Policy Act) have afforded power marketers, merchant generators, Exempt Wholesale Generators (EWGs) and utilities the opportunity to compete actively in wholesale energy markets and have allowed consumers the right to choose their energy suppliers. The deregulation and restructuring of the nation's energy markets, the unbundling of energy and related services, the diverse strategies within the industry related to holding, building, buying or selling generation capacity and consolidation within the

industry have had, and are likely to continue to have, a significant effect on PSEG and its subsidiaries, providing them with new opportunities and exposing them to new risks.

As energy markets have changed dramatically in recent years, PSEG and its subsidiaries have transitioned from a vertically integrated utility to an energy company with a diversified business mix. PSEG has realigned its organizational structure to address the competitive environment brought about by the deregulation of the electric generation industry and has evolved from primarily being a state regulated New Jersey utility to operating as a competitive energy company with operations primarily in the Northeastern U.S. and in other select markets. As the competitive portion of PSEG's business has grown, the resulting financial risks and rewards have become greater, causing financial requirements to change and increasing the volatility of earnings and cash flows.

PSEG seeks to reduce future volatility of earnings and cash flows principally by entering into longer-term contracts for material portions of its anticipated energy output. PSEG may also reduce exposure to its international businesses by seeking to opportunistically monetize investments of Energy Holdings that may no longer have a strategic fit. PSEG also expects a gradual decline in earnings from Resources' leveraged leasing business due to the maturation of its investment portfolio. The proceeds from Energy Holdings' asset sales will be used, over time, to reduce debt and equity and to maintain credit requirements. For additional information, see Item 7. Management's Discussion and Analysis of Financial Condition and Results of Operations (MD&A)—Overview of 2004 and Future Outlook.

Recent Developments—Merger Agreement

On December 20, 2004, PSEG entered into an agreement and plan of merger (Merger Agreement) with Exelon Corporation (Exelon), a public utility holding company registered under PUHCA which is headquartered in Chicago, Illinois, whereby PSEG will be merged with and into Exelon (Merger). Under the Merger Agreement, each share of PSEG Common Stock will be converted into 1.225 shares of Exelon Common Stock.

The Merger Agreement has been unanimously approved by both companies' boards of directors. Before the Merger may be completed, various approvals or consents must be obtained from shareholders, FERC, the SEC, the Nuclear Regulatory Commission (NRC) and various utility regulatory, antitrust and other authorities in the U.S. and in foreign jurisdictions. PSEG and Exelon have made some of the regulatory filings to obtain necessary regulatory approvals. It is anticipated that this approval process will be completed and the Merger will close within 12 months to 15 months after the announcement of the Merger Agreement in December 2004.

PSEG is committed to this proposed business combination, however, pending receipt of the various required approvals, which cannot be assured, PSEG intends to remain positioned with a viable stand-alone strategy. For additional information related to the Merger, see Item 3. Legal Proceedings, Item 7. MD&A—Overview of 2004 and Future Outlook—Merger Agreement and Note 25. Merger Agreement of the Notes to the Consolidated Financial Statements (Notes).

PSE&G

PSE&G is a New Jersey corporation, incorporated in 1924, and has principal executive offices at 80 Park Plaza, Newark, New Jersey 07102. PSE&G is an operating public utility company engaged principally in the transmission and distribution of electric energy and gas service in New Jersey. PSE&G, pursuant to an order of the New Jersey Board of Public Utilities (BPU) issued under the provisions of the New Jersey Electric Discount and Energy Competition Act (EDECA), transferred all

of its electric generation facilities, plant, equipment and wholesale power trading contracts to Power and its subsidiaries in August 2000 for approximately $2.8 billion. Also, pursuant to a BPU order, PSE&G transferred its gas supply business, including its inventories and supply contracts, to Power in May 2002 for $183 million. PSE&G continues to own and operate its electric and gas transmission and distribution business. In addition, PSE&G Transition Funding LLC (Transition Funding), a bankruptcy-remote subsidiary of PSE&G, was formed in 1999 for the sole purpose of issuing $2.525 billion principal amount of transition bonds in connection with the securitization of $2.4 billion of PSE&G's stranded costs approved for recovery by the BPU under EDECA.

PSE&G provides electric and gas service in areas of New Jersey in which approximately 5.5 million people, about 70% of the state's population, reside. PSE&G's electric and gas service area is a corridor of approximately 2,600 square miles running diagonally across New Jersey from Bergen County in the northeast to an area below the city of Camden in the southwest. The greater portion of this area is served with both

electricity and gas, but some parts are served with electricity only and other parts with gas only. This heavily populated, commercialized and industrialized territory encompasses most of New Jersey's largest municipalities, including its six largest cities—Newark, Jersey City, Paterson, Elizabeth, Trenton and Camden—in addition to approximately 300 suburban and rural communities. This service territory contains a diversified mix of commerce and industry, including major facilities of many nationally prominent corporations. PSE&G's load requirements are split among residential, commercial and industrial customers, detailed below under customers. PSE&G believes that it has all the franchise rights (including consents) necessary for its electric and gas distribution operations in the territory it serves. Such franchise rights are not exclusive.

PSE&G distributes electric energy and gas to end-use customers within its designated service territory. All electric and gas customers in New Jersey have the ability to choose an electric energy and/or gas supplier. Pursuant to BPU requirements, PSE&G serves as the supplier of last resort for electric and gas customers within its service territory. PSE&G earns no margin on the commodity portion of its electric and gas sales. PSE&G earns margins through the transmission and distribution of electricity and gas. PSE&G's revenues for these services are based upon tariffs approved by the BPU and FERC. The demand for electric energy and gas by PSE&G's customers is affected by customer conservation, economic conditions, weather and other factors not within PSE&G's control.

New Jersey's Electric Distribution Companies (EDCs), including PSE&G, provide two types of Basic Generation Service (BGS). BGS is the default electric supply service for customers who do not choose a third party to source their electric supply requirements. BGS-Fixed Price (FP) provides supply for smaller commercial and residential customers at seasonally-adjusted fixed prices. BGS-FP rates change annually on June 1 and are based on the average BGS price obtained at auction in the current year and two prior years. BGS-Commercial and Industrial Energy Price (CIEP) provides supply for larger customers at hourly PJM Interconnection, L.L.C. (PJM) real-time market prices for a term of 12 months. BGS-FP and BGS-CIEP represent approximately 84% and 16%, respectively, of PSE&G's load.

New Jersey's EDCs jointly procure the supply to meet their BGS obligations through two concurrent auctions authorized by the BPU for New Jersey's total BGS requirement each February. The results of this auction determine which energy suppliers are authorized to supply BGS to New Jersey's EDCs. As a condition of qualification to participate in this auction, energy suppliers are required to agree to execute the BGS Master Service Agreement and provide required security within three days of BPU certification of auction results, in addition to satisfying creditworthiness requirements.

PSE&G's total BGS-FP load is approximately 8,600 megawatts (MW). Approximately one-third of this total load is expected to be auctioned off each year for a three-year term. The current pricing is as follows:

	Term Ending			
	May 2005(a)	May 2006(b)	May 2007(a)	May 2008(c)
Term	12 months	34 months	36 months	36 months
Load (MW)	2,840	2,900	2,840	2,840
$ per Kilowatt-hour (kWh)	$ 0.05479	$ 0.05560	$ 0.05515	$ 0.06541

(a) Prices set in the February 2004 BGS auction.

(b) Prices set in the February 2003 BGS auction.

(c) Prices set in the February 2005 BGS auction which become effective on June 1, 2005 when the agreements for the 12-month (May 2005) BGS-FP supply agreements expire.

PSE&G has entered into a full requirements contract through 2007 with Power to meet the supply requirements of PSE&G's gas customers. Power charges PSE&G for gas commodity costs which PSE&G recovers from its customers. Any difference between rates charged by Power under the Basic Gas Supply Service (BGSS) contract and rates charged to its customers are deferred and collected or refunded through adjustments in future rates.

On October 5, 2004, the BPU approved a 3% increase in PSE&G's residential gas commodity charge to cover the higher cost of natural gas. The cost of energy supply, for both gas and electricity, is passed through from PSE&G to its customers.

Competitive Environment

The electric and gas transmission and distribution business has minimal risks from competitors. PSE&G's transmission and distribution business is minimally impacted when customers choose alternate electric or gas suppliers since PSE&G earns its return by providing transmission and distribution service, not by supplying the commodity.

Customers

As of December 31, 2004, PSE&G provided service to approximately 2.1 million electric customers and approximately 1.7 million gas customers, detailed below. In addition to its transmission and distribution business, PSE&G also offers appliance services and repairs to customers throughout its service territory.

	% of Sales	
Customer Type	Electric	Gas
Commercial	30%	60%
Residential	55%	36%
Industrial	15%	4%
Total	100%	100%

Employee Relations

As of December 31, 2004, PSE&G had 6,327 employees. PSE&G has three-year collective bargaining agreements in place with four unions, representing 4,996 employees, which expire on April 30, 2005. New six-year collective bargaining agreements with the four unions were ratified in February 2005. PSE&G believes that it maintains satisfactory relationships with its employees. For additional information related to the Merger, see Item 7. MD&A—Overview of 2004 and Future Outlook—Merger Agreement and Note 25. Merger Agreement of the Notes.

Power

Power is a Delaware limited liability company, formed in 1999, and has its principal executive offices at 80 Park Plaza, Newark, New Jersey 07102. Power is a multi-regional, independent wholesale energy supply company that integrates its generating asset operations with its wholesale energy, fuel supply, energy trading and marketing and risk management functions through three principal direct wholly-owned subsidiaries: Nuclear, Fossil and ER&T.

As of December 31, 2004, Power's generation portfolio consisted of approximately 14,607 MW of installed capacity which is diversified by fuel source and market segment. For additional information, see Item 2. Properties.

Through its operating subsidiaries, Power competes as an independent wholesale electric generating company, primarily in the Northeast U.S. Most of Power's generating assets are strategically located within PJM, one of the nation's largest and most developed energy markets.

In the PJM market, the pricing of energy is based upon the locational marginal price (LMP) set through power providers' bids. Due to transmission constraints, the LMP may be higher in congested areas during peak demand periods reflecting the bid prices of the higher cost units that are dispatched to supply demand. This typically occurs in the eastern portion of the grid, where many of Power's plants are located. These bids are currently capped at $1,000 per megawatt-hour (MWh). In the event that available generation within PJM is insufficient to satisfy demand, PJM may institute emergency purchases from adjoining regions for which there is no price cap.

To reduce volatility in earnings and cash flow, Power's objective is to enter into load serving contracts, firm sales and trading positions sufficient to hedge at least 75% of its anticipated output over an 18-month to 24-month horizon. Power has achieved this objective through a combination of contracts related to the New Jersey BGS auctions, contracts in Pennsylvania and Connecticut and other firm sales and trading positions. Prospectively, Power intends to take advantage of the BGS auctions in New Jersey and other opportunities elsewhere in the market region to continue to meet this objective.

In February 2005, the BPU approved the results of the BGS-FP and CIEP auctions for New Jersey customers. Each bidder was limited to a third of each EDC's total load. Power will continue to be a direct supplier of New Jersey EDCs under both the BGS-FP and CIEP auctions, entering into additional contracts that will begin on June 1, 2005. Power believes that its obligations under these contracts are reasonably balanced by its available supply.

In addition to the electric generation business described above, Power's revenues include gas supply sales under the BGSS contract with PSE&G. Power also generates revenue from the sales of various commodity-based instruments, such as capacity, ancillary services, emission credits and congestion credits, such as firm transmission rights (FTRs).

Fossil

Fossil has an ownership interest in 12 generating stations in New Jersey, one in New York, two in Connecticut, two in Pennsylvania, one in Ohio and one in Indiana. Fossil also has an ownership interest in one hydroelectric-pumped storage facility in New Jersey. For additional information, see Item 2. Properties—Power.

Fossil began operating in New England Power Pool (NEPOOL) with the acquisition of two fossil fuel generating stations in Connecticut in late 2002: the Bridgeport Harbor facility, a 513 MW coal/oil fuel facility and the New Haven Harbor facility, a 448 MW oil/gas facility. Fossil completed construction of the Waterford, Ohio plant, an 821 MW natural gas-fired, combined cycle plant, which began commercial operation in August 2003. In addition, Fossil completed construction of a 1,096 MW natural gas-fired, combined cycle plant in Lawrenceburg, Indiana, which began commercial operation in June 2004. Additionally, the Albany, New York generating station is currently being replaced with a 763 MW combined cycle plant, the Bethlehem Energy Center, which is expected to be operational in the second quarter of 2005. The Linden, New Jersey generating station is currently being replaced with a 1,220 MW natural gas-fired, combined cycle plant, which is expected to be operational in 2006.

Fossil uses coal, natural gas and oil for electric generation. These fuels are purchased through various contracts and in the spot market and represent a significant portion of Power's working capital requirements. Changes in the prices of these fuel sources impact Power's costs and working capital requirements. The majority of Power's fossil generating stations obtain their fuel supply from within the U.S. In order to minimize emissions levels, the Connecticut generating facilities use a specific type of coal, which is obtained from Indonesia through a fixed-price supply contract through 2008 and transportation contracts covering 100% of supply through 2006, 66% in 2007 and 33% in 2008. Fossil believes it can obtain adequate coal, natural gas and oil supplies for its facilities over the next several years. However, issues could arise, such as transportation constraints, which could adversely affect the operation of Fossil's plants. In addition, if the supply of coal from Indonesia or equivalent coal from other sources was not available for the Connecticut facilities, additional material capital expenditures could be required to modify the existing plants to enable their continued operation. For additional information, see Item 2. Properties—Power.

Nuclear

Nuclear has an ownership interest in five nuclear generating units: the Salem Nuclear Generating Station, Units 1 and 2 (Salem 1 and 2), each owned 57.41% by Nuclear and 42.59% by Exelon Generation Company LLC (Exelon Generation); the Hope Creek Nuclear Generating Station (Hope Creek), which is owned 100% by Nuclear; and, the Peach Bottom Atomic Power Station Units 2 and 3 (Peach Bottom 2 and 3), each of which is operated by Exelon Generation and owned 50% by Nuclear. For additional information, see Item 2. Properties—Power.

For a discussion of recent operational issues, see Regulatory Issues—NRC.

Nuclear unit capacity and availability factors for 2004 were as follows:

Unit	Capacity Factor*	Availability Factor
Salem Unit 1	74.9%	77.0%
Salem Unit 2	89.8%	90.5%
Hope Creek	65.6%	69.7%
Peach Bottom Unit 2	91.0%	91.9%
Peach Bottom Unit 3	102.3%	100.0%
Combined Nuclear's Share	81.8%	83.2%

* Maximum Dependable Capacity (MDC) net.
The 2004 capacity factor was adversely affected by extended outages at Salem and Hope Creek during the year. For additional information, see Regulatory Issues—NRC and Item 7. MD&A—Overview of 2004 and Future Outlook—Power. The combined capacity factor for Nuclear in 2003 was approximately 87.7%.

920980584

Nuclear has several long-term purchase contracts with uranium suppliers, converters, enrichers and fabricators to meet the currently projected fuel requirements for the Salem and Hope Creek nuclear power plants. Nuclear has been advised by Exelon Generation that it has similar purchase contracts to satisfy the annual fuel requirements for Peach Bottom. See Note 14. Commitments and Contingent Liabilities of the Notes.

Concurrent with the Merger Agreement, Nuclear entered into an Operating Services Contract (OSC) with Exelon Generation, which commenced on January 17, 2005, relating to the operation of the Salem and Hope Creek nuclear generating stations. The OSC provides that Exelon Generation will provide a chief nuclear officer and other key personnel to oversee daily plant operations at the Hope Creek and Salem nuclear generating stations and to implement the Exelon operating model, which defines practices that Exelon has used to manage its own nuclear performance improvement program. Nuclear will continue as the license holder with exclusive legal authority to operate and maintain the plants, will retain responsibility for management oversight and will have full authority with respect to the marketing of its share of the output from the facilities. Exelon Generation will be entitled to receive reimbursement of its costs in discharging its obligations, an annual operating services fee and incentive fees of up to $12 million annually based on attainment of goals relating to safety, capacity factors of the plants and operation and maintenance expenses. The OSC has a term of two years, subject to earlier termination in certain events upon prior notice, including any termination of the Merger Agreement. In the event of such termination, Exelon Generation will continue to provide services under the OSC for a transition period of at least 180 days and up to two years at the election of Nuclear. This period may be further extended by Nuclear for up to an additional 12 months if Nuclear determines that additional time is necessary to complete required activities during the transition period.

ER&T

ER&T purchases the capacity and energy produced by each of the generation subsidiaries of Power. In conjunction with these purchases, ER&T uses commodity and financial instruments designed to cover estimated commitments for BGS and other bilateral contract agreements. ER&T also markets electricity, capacity, ancillary services and natural gas products on a wholesale basis. ER&T is a fully integrated wholesale energy marketing and trading organization that is active in the long-term and spot wholesale energy markets.

Electric Supply

Power's generation capacity is sourced from a diverse mix of fuels comprised of approximately 45% gas, 24% nuclear, 16% coal, 14% oil and 1% pumped storage. Power's fuel diversity serves to mitigate risks associated with fuel price volatility and market demand cycles. The following table indicates the MWh output of Power's generating stations by fuel type in 2004 and its estimated MWh output by fuel type for 2005.

Generation by Fuel Type	Actual 2004	Estimated 2004(A)
Nuclear:		
New Jersey facilities	34%	38%
Pennsylvania facilities	21%	18%
Fossil:		
Coal:		
New Jersey facilities	12%	14%
Pennsylvania facilities	13%	13%

http://www.sec.gov/Archives/edgar/data/81032/000095011705000700/e30200.htm

Connecticut facilities	6%	5%
Oil and Natural Gas:		
New Jersey facilities	13%	7%
New York facilities	—	2%
Connecticut facilities	1%	2%
Midwest facilities	—	1%
Pumped Storage:	—	—
Total	100%	100%

(A) No assurances can be given that actual 2005 output by source will match estimates.

920980586

Approximately 86% of Power's generation was from nuclear and coal facilities in 2004, which are typically the most cost-effective fuel types on an operating cost basis. On a per-MWh basis, nuclear power is the most cost-effective and, as a result, Power's profitability is largely affected by the utilization and efficiency of its nuclear facilities. The nuclear facilities are considered "base load" and run continuously when not in shutdown. Older oil and gas-fired facilities are typically the least cost-effective of the fossil fuel burners. Accordingly, these plants are not usually run outside of peak periods of demand when the cost of operation can be justified by the market price. The costs of operating coal and oil burning facilities and new combined cycle gas facilities range between those of the two aforementioned facility types. These plants can be base load plants and/or load following plants.

Gas Supply

As described above, Power sells gas to PSE&G under the BGSS contract. Additionally, based upon availability, Power sells gas to others. About 42% of PSE&G's peak daily gas requirements are provided through firm transportation, which is available every day of the year. The remainder comes from field storage, liquefied natural gas, seasonal purchases, contract peaking supply, propane and refinery and landfill gas. Power purchases gas for its gas operations directly from natural gas producers and marketers. These supplies are transported to New Jersey by four interstate pipeline suppliers.

Power has approximately 1.17 billion cubic-feet-per-day of firm transportation capacity under contract to meet the primary needs of the gas consumers of PSE&G and the needs of its generation fleet. In addition, Power supplements that supply with a total storage capacity of 82 billion cubic feet that provides a maximum of 0.94 billion cubic feet-per-day of gas during the winter season.

Power expects to be able to meet the energy-related demands of its firm natural gas customers. However, the ability to maintain an adequate supply could be affected by several factors not within Power's control, including curtailments of natural gas by its suppliers, the severe weather and the availability of feedstocks for the production of supplements to its natural gas supply. In addition, supply of all types of gas is affected by the nationwide availability of all sources of fuel for energy production.

Competitive Environment

Power's competitors include merchant generators with or without trading capabilities, utilities that have generating capability or have formed generation and/or trading affiliates, aggregators, wholesale power marketers and combinations thereof. These participants compete with Power and one another buying and selling in wholesale power pools, entering into bilateral contracts and/or selling to aggregated retail customers. Power believes that its asset size and location, regional market knowledge and integrated functions allow it to compete effectively in its selected markets.

Actions by developers, including Power, to build new generating stations have led to an overbuild situation in certain markets, including PJM, causing downward pressure on energy and capacity prices. Capacity prices in PJM have recently averaged well below $10 per kW-year as compared to historical levels of more than $25 per kW-year. This overcapacity has decreased capacity revenues and has decreased margins from some of Power's units. Power believes that recent events in PJM, including preliminary discussions with regard to changes in the design of the capacity market, as well as advancement toward reliability-based payments to generators, may lead to changes that could enhance the value of Power's generation fleet in PJM. In addition, Power anticipates that capacity prices in PJM will return to historical levels in the next several years.

The New England market is also overbuilt and is also undergoing changes. The existence of

reliability-based payments, coupled with the anticipated start of locational capacity markets in 2006, could also enhance the value of Power's generation assets in Connecticut.

The Midwest is also expected to have excess capacity over the next several years due to recent additions, which will continue to negatively impact the expected returns of Power's Lawrenceburg and Waterford facilities. The drivers to reduce the excess capacity will be load growth, the retirement of certain plants, particularly older plants of competitors due to the weakened wholesale energy and capacity market, and increased costs associated with higher levels of environmental compliance.

PJM continues to expand. On May 1, 2004, Commonwealth Edison Company joined PJM. On June 17, 2004, FERC issued two orders to allow the operating affiliates of American Electric Power (AEP) Service Corporation to transfer transmission facilities in Virginia to PJM's control and to allow AEP's Kentucky operating company to join PJM. AEP joined PJM effective October 1, 2004. On January 1, 2005, Duquesne Light Company joined PJM. In addition, FERC has conditionally approved Virginia Electric and Power Company's, a unit of Dominion Resources Inc., application to join PJM. These changes bring both opportunities and risks to Power.

Power's businesses are also under competitive pressure due to technological advances in the power industry and increased efficiency in certain energy markets. It is possible that advances in technology, such as distributed generation, will reduce the cost of alternative methods of producing electricity to a level that is competitive with that of most central station electric production.

Additional legislation in the states where Power operates or into which Power sells energy has been introduced within the last few years to further encourage competition at the retail level (often referred to as customer choice or retail access). However, there is a risk if states should decide to turn away from competition and allow regulated utilities to continue to own or reacquire and operate generating stations in a regulated and potentially uneconomical manner. This has already occurred in certain states in which Power does business. The lack of consistent rules in markets outside of PJM can negatively impact the competitiveness of Power's plants. Also, regional inconsistencies in environmental regulations, particularly those related to emissions, have put some of Power's plants which are located in the Northeast, where rules are more stringent, at an economic disadvantage compared to its competitors in certain Midwest states.

Customers

As EWGs, Power's subsidiaries do not directly serve retail customers. Power uses its generation facilities primarily for the production of electricity for sale at the wholesale level. Power's customers consist mainly of wholesale buyers, primarily within PJM, but also in New York, Connecticut and the Midwest. Power is a direct supplier of New Jersey's EDCs. In addition, Power extended into the New England Power Market by securing a three-year, full requirements contract with a Connecticut utility with an expected peak load of 1,150 MW expiring December 31, 2006. In addition, Power has entered into four-year contracts totaling 500 MW with two Pennsylvania utilities, expiring in 2008 and is considering pursuing similar opportunities in other states.

Employee Relations

As of December 31, 2004, Power had 2,935 employees. Power has collective bargaining agreements with three union groups, which expire on April 30, 2005, October 31, 2005 and May 15, 2006, respectively. New six-year collective bargaining agreements were ratified with the three union groups in February 2005. These agreements cover 1,449 employees (701 employees, or approximately 65% of the workforce for Fossil and 748 employees, or approximately 45% of the workforce for Nuclear). Power believes that it maintains satisfactory relationships with its employees. For additional information, see Item 7. MD&A—Overview of 2004 and Future Outlook—Merger Agreement and Note 25. Merger Agreement of the Notes.

Energy Holdings

Energy Holdings is a New Jersey limited liability company and is the successor to PSEG Energy Holdings Inc., which was originally incorporated in 1989. Energy Holdings' principal executive offices are located at 80 Park Plaza, Newark, New Jersey 07102. Energy Holdings has two principal direct wholly-owned subsidiaries, which are also its segments: Global and Resources.

Energy Holdings has pursued invesument opportunities in the global energy markets, with Global focusing on the operating segments of the electric industries and Resources primarily making financial investments in these industries. Global and Resources have more than 70 financial and operating investments.

920980590

Energy Holdings' portfolio is diversified by number, type and geographic location of investments. As of December 31, 2004, its assets were comprised of the following types:

	As of December 31, 2004
Leveraged Leases (mainly energy-related)	40%
International Electric Distribution Facilities	22%
International Electric Generation Plants	15%
Domestic Electric Generation Plants	12%
Other(1)	8%
Other Passive Financial Investments	3%
Total	100%

(1) Assets not allocated to a special project, including corporate receivables.

The characteristics of each of these investment types are described in more detail below.

Global

Global is a power producer and distributor that owns and operates electric generation and distribution facilities in selected domestic and international markets.

As of December 31, 2004, Global's assets, which include consolidated projects and those accounted for under the equity method, share of project MW and number of customers by region are as follows:

	As of December 31, 2004		
	Assets	MW	Number of Customers
	(Millions)		
Generation:			
North America	$ 841	2,411	N/A
South America	335	397	N/A
Europe	446	662	N/A
India and the Middle East	309	260	40,000
Distribution:			
South America	1,616	N/A	2,900,000
Other:			
Other(1)	597	N/A	N/A
Total	$ 4,144	3,730	2,940,000

(1) Assets not allocated to a specific project, including corporate receivables and deferred tax assets.

Global realized substantial growth prior to 2002, but has been faced with significant challenges as the international electricity privatization model has become stressed. These challenges include the losses incurred on the abandonment of Global's Argentine investments in 2002, the devaluation of the Brazilian Real and the corresponding decrease in earnings and cash flow from Global's investment in Rio Grande Energia S.A. (RGE), the impact of other foreign currency fluctuations and the failure of certain counterparties to honor contracts with certain of Global's investments. In 2003, Global began to review its portfolio and to seek to opportunistically monetize investments that no longer had a strategic fit. As part of this strategy, in May 2004, Global completed the sale of its majority interest in Carthage Power Company (CPC) in Rades, Tunisia. In December 2004, Global completed the sale of its 50% equity interest in Meiya Power Company Limited (MPC) to BTU Power Company. For additional information relating to these dispositions, see Note 4. Discontinued Operations, Dispositions and Acquisitions of the Notes.

Global has placed its near-term emphasis on maintaining adequate liquidity and improving profitability of currently held investments. While Global still expects certain of its investments in South America to

contribute significantly to its earnings in the future, adverse political and economic risks associated with this region could have a material adverse impact on such investments.

Global has sought to minimize risk in the development and operation of its generation projects by selecting partners with complementary skills, structuring long-term power purchase contracts, arranging financing prior to the commencement of construction and contracting for adequate fuel supply. Historically, Global's operating affiliates have entered into long-term power purchase contracts, thereby selling the electricity produced for the majority of the project life. However, two plants in Texas, Guadalupe (1,000 MW) and Odessa (1,000 MW), and one plant in Poland, Skawina CHP Plant (Skawina) (439 MW), operate as merchant plants without long-term power purchase agreements (PPAs).

Global, to the extent practical, attempts to limit its financial exposure associated with each project and to mitigate development risk, foreign currency exposure, interest rate risk and operating risk, including exposure to fuel costs, through contracts. For additional information related to these risks, see Item 7A. Qualitative and Quantitative Disclosures About Market Risk. In addition, project loan agreements are generally structured on a non-recourse basis. Further, Global generally structures project financings so that a default under one project's loan agreement will have no effect on the loan agreements of other projects or Energy Holdings' debt.

Fuel supply arrangements are designed to balance long-term supply needs with price considerations. Global's project affiliates generally utilize a combination of long-term contracts and spot-market purchases. Global believes that there are adequate fuel supplies for the anticipated needs of its generating projects. Global also believes that transmission access and capacity are sufficient at this time for its generation projects.

See Item 2. Properties—Energy Holdings for discussion of individual investments.

Resources

Resources invests in energy-related financial transactions and manages a diversified portfolio of assets, including leveraged leases, operating leases, leveraged buyout funds, limited partnerships and marketable securities. Established in 1985, Resources has a portfolio of more than 50 separate investments. Based on current market conditions and Energy Holdings' intent to limit capital expenditures, it is unlikely that Resources will make significant additional investments in the near term.

Also, the Demand Side Management (DSM) business, previously managed by PSEG Energy Technologies Inc. (Energy Technologies) was transferred to Resources as of December 31, 2002. DSM revenues are earned principally from monthly payments received from utilities, which represent shared electricity savings from the installation of the energy efficient equipment.

920980593

The major components of Resources' investment portfolio as a percent of its total assets as of December 31, 2004 were:

	As of December 31, 2004	
	Amount	% of Resources' Total Assets
	(Millions)	
Leveraged Leases		
Energy-Related		
Foreign	$ 1,341	45%
Domestic	1,177	39%
Real Estate—Domestic	188	6%
Commuter Railcars—Foreign	88	3%
Aircraft—Domestic	57	2%
Total Leveraged Leases	2,851	95%
Limited Partnerships		
Leveraged Buyout Funds	27	1%
Other	14	—
Total Limited Partnerships	41	1%
Marketable Securities	3	—
Other Investments	15	1%
Owned Property	72	2%
Current and Other Assets	17	1%
Total Resources' Assets	$ 2,999	100%

As of December 31, 2004, no single investment represented more than 9% of Resources' total assets.

Leveraged Lease Investments

Resources maintains a portfolio that is designed to provide a fixed rate of return. Income on leveraged leases is recognized by a method which produces a constant rate of return on the outstanding net investment in the lease, net of the related deferred tax liability, in the years in which the net investment is positive. Any gains or losses incurred as a result of a lease termination are recorded as Operating Revenues as these events occur in the ordinary course of business of managing the investment portfolio.

In a leveraged lease, the lessor acquires an asset by obtaining equity representing approximately 15% to 20% of the cost and incurring non-recourse lease debt for the balance. The lessor acquires economic and tax ownership of the asset and then leases it to the lessee for a period of time no greater than 80% of its remaining useful life. As the owner, the lessor is entitled to depreciate the asset under applicable federal and state tax guidelines. In addition, the lessor receives income from lease payments made by the lessee during the term of the lease and from tax receipts associated with interest and

depreciation deductions with respect to the leased property. The ability of Resources to realize these tax benefits is dependent on operating gains generated by its affiliates and allocated pursuant to PSEG's consolidated tax sharing agreement. Lease rental payments are unconditional obligations of the lessee and are set at levels at least sufficient to service the non-recourse lease debt. The lessor is also entitled to any residual value associated with the leased asset at the end of the lease term. An evaluation of the after-tax cash flows to the lessor determines the return on the investment. Under accounting principles generally accepted in the U.S. (GAAP), the lease investment is recorded on a net basis and income is recognized as a constant return on the net unrecovered investment.

Resources has evaluated the lease investments it has made against specific risk factors. The assumed residual-value risk, if any, was analyzed and verified by third parties at the time the investment was made. Credit risk was assessed and, if necessary, mitigated or eliminated through various structuring techniques, such as defeasance mechanisms and letters of credit. Resources has not taken currency risk in its cross-border lease investments. Transactions have been structured with rental payments denominated and payable in U.S. Dollars. Resources, as a passive lessor or investor, has not taken operating risk with respect to the assets it owns, so leveraged leases have been structured with the lessee having an absolute obligation to make rental payments whether or not the related assets operate. The assets subject to lease are an integral element in Resources' overall security and collateral position. If such assets were to be impaired, the rate of return on a

particular transaction could be affected. The operating characteristics and the business environment in which the assets operate are, therefore, important and must be understood and periodically evaluated. For this reason, Resources retains experts to conduct appraisals on the assets it owns and leases, as necessary.

Resources' ten largest lease investments as of December 31, 2004 were as follows:

Investment	Description	Recorded Investment Balances as of December 31, 2004	% of Resources' Total Assets
		(Millions)	
Reliant Energy MidAtlantic Power LLC	Three generating stations (Keystone, Conemaugh and Shawville)	$ 255	9%
Dynegy Holdings Inc	Two electric generating stations (Danskammer and Roseton)	207	7%
Seminole Electric Cooperative	Seminole Generation Station Unit #2	197	7%
Midwest Generation (Guaranteed by Edison Mission Energy)	Two electric generating stations (Powerton and Joliet)	191	6%
ENECO	Gas distribution network (Netherlands)	155	5%
Merrill Creek	Merrill Creek Reservoir Project	136	5%
Grand Gulf	Nuclear generating station (U.S.)	130	4%
ESG	Electric distribution system (Austria)	126	4%
EZH	Electric generating station (Netherlands)	122	4%
NUON	Gas distribution network (Netherlands)	98	3%
		$ 1,617	54%

For additional information on leases, including credit, tax and accounting risk related to certain lessees, see Item 7. MD&A—Results of Operations—Energy Holdings and Item 7A. Qualitative and Quantitative Disclosures About Market Risk—Credit Risk—Energy Holdings.

Other Subsidiaries

Enterprise Group Development Corporation (EGDC), a commercial real estate property management business, is conducting a controlled exit from the real estate business. Total assets of EGDC as of December 31, 2004 and 2003 were $72 million and $86 million, respectively, and include development land in New Jersey, Maryland and Virginia and an 80% partnership interest in buildings and land in New Jersey.

Competitive Environment

Energy Holdings and its subsidiaries continue to experience substantial competition, both in the U.S. and in international markets. In the U.S., an overbuild in generation facilities has led to a large capacity surplus in several regions, including Texas. This has resulted in reduced operating margins for both

independent power producers and utility generators where the marketplace has been evolving from a rate-regulated structure to a competitive environment. Global anticipates that these matters in Texas may improve in the long term, leading to higher capacity prices and increased utilization of its facilities.

In addition, the Polish government is seeking to renegotiate existing PPAs that it believes to be uncompetitive in the local energy market. With respect to Global's distribution businesses in Chile, Peru and Brazil, these investments are rate-regulated and are exposed to minimal risks from competitors. See Regulatory Issues—International Regulation for additional information.

920980597

Customers

Global has ownership interests in four distribution companies in South America which serve approximately 2.9 million customers and has developed or acquired interests in electric generation facilities which sell energy, capacity and ancillary services to numerous customers through PPAs, as well as into the wholesale market. For additional information, see Item 2. Properties—Energy Holdings.

Employee Relations

As of December 31, 2004, Energy Holdings had 68 employees. Energy Holdings believes that it maintains satisfactory relationships with its employees. For additional information, see Item 7. MD&A—Overview of 2004 and Future Outlook—Merger Agreement and Note 25. Merger Agreement of the Notes.

Services

Services is a New Jersey corporation with its principal executive offices at 80 Park Plaza, Newark, New Jersey 07102. Services provides management and administrative services to PSEG and its subsidiaries. These include accounting, legal, communications, human resources, information technology, treasury and financial, investor relations, stockholder services, real estate, insurance, risk management, tax, library and information services, security, corporate secretarial and certain planning, budgeting and forecasting services. Services charges PSEG and its subsidiaries for the cost of work performed and services provided pursuant to the terms and conditions of intercompany service agreements. As of December 31, 2004, Services had 1,183 employees, including 114 unionized employees. A new six-year collective bargaining agreement with the union group was ratified in February 2005. Services believes that it maintains satisfactory relationships with its employees. For additional information, see Item 7. MD&A—Overview of 2004 and Future Outlook—Merger Agreement and Note 25. Merger Agreement of the Notes.

REGULATORY ISSUES

Federal Regulation

PSEG, PSE&G, Power and Energy Holdings

PUHCA

PSEG has claimed an exemption from regulation by the SEC as a registered holding company under PUHCA, except for Section 9(a)(2) thereof, which relates to the acquisition of 5% or more of the voting securities of an electric or gas utility company. Fossil, Nuclear, certain subsidiaries of Fossil and certain subsidiaries of Energy Holdings with domestic operations are EWGs. In addition, several of Energy Holdings' investments include foreign utility companies (FUCOs) under PUHCA and Qualifying Facilities (QFs) under the Public Utility Regulatory Policies Act of 1978 (PURPA). If PSEG were no longer exempt under PUHCA, or if the subsidiaries' investments failed to maintain their status as EWGs, FUCOs or QFs, PSEG and its subsidiaries may be subject to additional regulation by the SEC with respect to their financing and investing activities, including the amount and type of non-utility investments they would be permitted to make. PSEG does not believe, however, that this would have a material adverse effect on it and its subsidiaries.

Environmental

PSEG and its subsidiaries are also subject to the rules and regulations relating to environmental issues promulgated by the U.S. Environmental Protection Agency (EPA), the U.S. Department of Energy (DOE) and other regulators. For information on environmental regulation, see Environmental Matters.

FERC

FERC is an independent federal agency that regulates the transmission of electric energy and sale of electric energy at wholesale prices in interstate commerce pursuant to the Federal Power Act. FERC also regulates the interstate transportation of, as well as certain wholesale sales of, natural gas pursuant to the Natural Gas Act. Several PSEG subsidiaries including PSE&G, Fossil, Nuclear, ER&T and certain subsidiaries of Fossil and certain subsidiaries of Energy Holdings with domestic operations are public utilities subject to regulation by FERC. FERC's regulation of public utilities is comprehensive and governs such

920980599

matters as rates, services, mergers, financings, affiliate transactions, market behaviors and reporting. FERC is also responsible under PURPA for administering PURPA's requirements for QFs.

Power

Reliability Must-Run (RMR) Status in PJM and New England

In September 2004, Power filed notice with PJM that it was considering the retirement of seven generating units in New Jersey, effective December 7, 2004, due to concerns about whether the units were economically viable under the current market structure. The units being considered for retirement are Sewaren 1, 2, 3 and 4, Kearny 7 and 8 and Hudson 1. The sites where the units are located have other electric generating units that would remain in operation. The units that were the subject of the notice have a combined installed capacity of 1,132 MW and a combined book value of $22 million. In response to Power's filed notice, PJM identified certain system reliability concerns associated with the retirements and said it would initiate meetings with Power on these and other issues designed to address these concerns including the compensation necessary to retain the generating units, discussed below.

Although applicable tariff provisions differ from region to region, RMR tariff provisions provide compensation to a generation owner when a unit proposed for retirement must continue operating for reliability purposes. On November 2, 2004, PJM filed with FERC to amend its Tariff and Operating Agreement. This filing sets forth a RMR compensation mechanism for those generation units in PJM that are scheduled to be retired or mothballed but would remain necessary for reliability. Under the proposal, RMR compensation would be in the form of cost-of-service recovery or recovery of going-forward costs plus a fixed cost adder. By order dated January 25, 2005, FERC approved the RMR compensation mechanism set forth in the November 2, 2004 filing. It is anticipated that the Sewaren 1, 2, 3 and 4 and Hudson 1 units will qualify for RMR treatment under these procedures at least through the summer of 2006. In February 2005, Power requested that FERC approve cost-of-service recovery rates for the Sewaren and Hudson units. If approved the rates would provide approximately $23 million and $17 million of annual revenue for the Sewaren and Hudson units, respectively. The Kearny 7 and 8 units, however, require significant repairs before they can be returned to operational status and it is not anticipated that this work can be performed in time for the units to be available for the summer of 2005, which is the only period for which PJM has identified a reliability need for them. As a result, it does not appear that these units will be eligible for RMR treatment under the PJM procedures.

In the New England electricity market, many owners of generation facilities have filed with FERC for RMR treatment under the NEPOOL Open Access Transmission Tariff. If FERC grants RMR status for a generation facility, the owner is entitled to receive cost-of-service treatment for its facility for the duration of an RMR contract that it enters into with ISO New England Inc. On November 17, 2004, PSEG Power Connecticut LLC (Power Connecticut), a Power subsidiary, filed a request for RMR treatment for the New Haven Harbor generation station and Unit 2 at the Bridgeport Harbor generation station. Numerous parties, including the Connecticut Department of Public Utility Control, the Connecticut Attorney General and various consumer groups, opposed this filing. On January 14, 2005, FERC issued an order that accepted the filing, suspended its effectiveness for a nominal period of 60 days, and set certain issues for hearing and settlement procedures. Beginning on January 14, 2005, subject to refund and hearing, Power Connecticut began collecting a monthly fixed payment amount of approximately $1.6 million for reliability services provided by the Bridgeport Harbor Station, Unit 2 and approximately $3.9 million for reliability services performed by the New Haven Harbor Station. By their terms, the RMR contracts expire when a locational installed capacity mechanism becomes effective in New England, which, according to FERC's directives, is expected to occur on January 1, 2006. The first RMR settlement conference was held on February 8, 2005. It is anticipated that settlement discussions will continue for a 60-day period, at a minimum. Power Connecticut believes that it has meritorious

positions with respect to the issues set for hearing and settlement; however, a final outcome of this process cannot be determined at this time. In addition, it is anticipated that certain parties opposing the filing will seek rehearing of the January 14, 2005 order and, following the exhaustion of remedies at FERC, could seek judicial review. Settlement of challenges to the order would result in dismissal by the settling parties. While Power Connecticut does not believe such challenges are likely to be successful, Power Connecticut cannot predict a final outcome at this time.

PSEG, PSE&G and Power

Regional through and out rates (RTOR)

RTOR are separate transmission rates for transactions where electricity originated in one transmission control area was transmitted to a point outside that control area. Both the Midwest Independent Transmission System Operator, Inc. (MISO) and PJM charged RTORs through December 1, 2004. Under an order dated November 18, 2004, FERC approved a new regional rate design which became effective December 1, 2004 for the entire PJM/MISO region. FERC's order also approved the continuation of license plate or concentrated rates with a transitional Seams Elimination Charge/Cost Adjustment/Assignment (SECA) methodology effective from December 1, 2004 through March 2006.

PSEG and its subsidiaries, along with other stakeholders, jointly (1) filed for rehearing of the November 18, 2004 order as it relates to the imposition of a SECA charge, (2) protested the SECA compliance filings and (3) protested and moved to reject the filing of AEP, Commonwealth Edison Company and Dayton Power & Light Company (New PJM Companies) to collect certain lost revenues resulting from the elimination of RTORs between PJM transmission owners. This request for rehearing is currently pending. On November 30, 2004, FERC issued an order that allowed the New PJM Companies to make a filing with FERC to collect their lost revenues. On December 1, 2004, PSE&G began charging its BGS-FP customers for the increase in transmission charges. Consistent with the terms of the BGS-FP contracts, ER&T (and other BGS-FP suppliers) will not receive any revenue associated with a BGS-FP pass-through of the SECA charge until the FERC's November 18, 2004 order is final and non-appealable. In the case of BGS-CIEP, it is anticipated that pass-through of the SECA charge will commence at the time when PJM begins billing of the SECA. Pursuant to a reciprocity provision in its tariff, PJM will not bill for the SECA until MISO commences billing of the SECA, which is estimated to be during March or April 2005. This delay in billing may allow sufficient time for FERC to rule on the protests before the Regional Transmission Organizations (RTOs) begin SECA billing, subject to refund. On February 10, 2005, FERC issued an order that accepted various SECA filings, established December 2004 as the effective date for the SECA rates, made them subject to refund and surcharge, and established hearing procedures to resolve the outstanding factual issues raised in the filings and the responsive pleadings. Depending on the outcome of this proceeding, which cannot be predicted at this time, PSEG, PSE&G and/or Power's results of operations could be negatively affected.

PJM Expansion

For information on PJM expansion, see Item 1. Business—Power—Competitive Environment.

PSEG, PSE&G, Power and Energy Holdings

Market Power

Under FERC regulations, public utilities may sell power at cost-based rates or apply to FERC for authority to sell at market-based rates (MBR). PSE&G, Fossil, Nuclear, ER&T and certain subsidiaries of Fossil, have applied for and received MBR authority from FERC.

On April 14, 2004, FERC issued a final order revising its generation market power screen, which it uses to determine whether power sellers may have the ability to exercise market power. Upon application by a power seller, if FERC determines that a seller is not able to exercise market power

under the screen, and the seller passes other tests, FERC's rules permit the seller to sell power at MBR. Failing FERC's revised screen will not conclusively determine whether an entity has market power, and applicants failing the test will have the ability to demonstrate that they do not possess market power despite the screen failure. The screen includes two separate analyses: (1) an uncommitted pivotal supplier analysis and (2) a market share analysis that is to be prepared on a seasonal basis. FERC eliminated an exemption that previously existed for generators in RTOs and Independent System Operators (ISOs), such as PJM and New York ISO (NYISO), and will require all entities that wish to sell at MBR to comply with the revised market power screen.

Also on April 14, 2004, FERC issued a notice that it will commence a pre-rulemaking to analyze the adequacy of its overall process used to consider whether an applicant is entitled to MBR authority. On July 8, 2004, FERC clarified that MBR applicants may net their supply against load-following or provider of last resort contracts, such as obligations to supply BGS in New Jersey, within the screen.

PSEG Lawrenceburg Energy Company LLC (Lawrenceburg) and PSEG Waterford Energy LLC (Waterford), indirect wholly-owned subsidiaries of Power, filed their respective triennial market power

reviews in August 2004, and received a notice from FERC on November 16, 2004 requesting further information as to whether Lawrenceburg and Waterford comply with FERC's revised market power screen in combination with other generation assets that their affiliates own in PJM. FERC required this new information by February 7, 2005, and Lawrenceburg and Waterford provided the required information by that date. Power is scheduled for its next triennial market power review in 2006. Despite the request for further information, Power continues to believe that the new market power rules as adopted by FERC will not have a material adverse effect on Power's ability to sell at MBR, although no assurances can be given.

On October 6, 2004, FERC issued a Notice of Proposed Rulemaking (NOPR) regarding reporting requirements for changes in status for entities with MBR authority. On February 10, 2005, FERC issued a final rule in this proceeding that requires entities with MBR to report to FERC within 90 days any changes in circumstances that FERC relied upon in granting MBR authority, and requires FERC to reevaluate MBR status following such an update. The final rule may require updates to FERC upon an acquisition, merger, generation retirement, contract execution or any other event that could affect the facts upon which FERC ruled in granting MBR to an entity. PSEG, PSE&G, Power and Energy Holdings cannot predict the impact, if any, that this rule will have on their operations.

Standards of Conduct

Since 1996, FERC has maintained standards of conduct governing the relationship between transmission providers and their domestic wholesale generation affiliates. These rules prevent domestic wholesale generation affiliates of a transmission provider from gaining an anticompetitive advantage over entities that are not affiliated with a transmission provider by obtaining non-public transmission information or preferential treatment from the affiliated transmission provider. In late 2003, FERC extended the applicability of its standards of conduct to gas and electric transmission providers and their energy affiliates. On April 16, 2004, FERC issued an order on rehearing that further revised and clarified its standards of conduct for transmission providers and their energy affiliates. The revised rules apply to the relationship between PSE&G, as an electric transmission provider, and (1) wholesale sales or marketing employees of PSE&G and (2) employees of Power and certain domestic subsidiaries of Energy Holdings. As of December 31, 2004, PSE&G and the applicable subsidiaries of PSEG believe that they are in compliance with FERC's revised standards of conduct, and posted written procedures on FERC's Open Access Same-Time Information System (OASIS) for compliance with FERC's standards of conduct.

RTO Accounting Treatment

On September 16, 2004, FERC issued a NOPR for the purpose of considering standard accounting and financial reporting rules for RTOs, ISOs and transmission owners within RTOs or ISOs. The proposed rule generally focuses on ensuring consistency in the reporting of costs by RTOs, ISOs and transmission owners within RTOs and ISOs. PSE&G, Power and Energy Holdings cannot predict the impact, if any, that these proceedings will have on their respective businesses.

PSE&G

Neptune Complaint Proceeding

On December 21, 2004, Neptune Regional Transmission System, LLC (Neptune) filed a complaint with FERC against PJM. Neptune is a 660 MW merchant transmission project running from central New Jersey to Long Island, with an expected in-service date of June 2007. Neptune is directly

interconnected to the transmission system of FirstEnergy Corporation (FirstEnergy), but upgrades to the PSE&G transmission system will also be required to move power across the grid. In its complaint, Neptune alleges that PJM impermissibly conducted an interconnection re-study triggered by generator retirements in PJM, which had the effect of increasing Neptune's cost exposure for network upgrades from approximately $4 million to approximately $26 million. Neptune is thus seeking to cap its cost exposure for upgrades. On February 10, 2005, FERC granted Neptune's complaint against PJM. In this order, FERC directed PJM to provide an Interconnection Agreement to Neptune within 10 days of the date of the order, which agreement will limit Neptune's cost responsibility for network upgrades to $4.4 million. FERC expressly declined to determine which entity(ies) would be responsible for paying the cost difference between $4.4 million and $26 million, noting that these issues would be addressed once transmission service is requested on the Neptune line. All affected parties in this proceeding are expected to seek rehearing of the FERC order, and may seek judicial

review as well. It is difficult to determine at this time whether PSE&G will be required to bear any portion of the upgrade costs related to the provision of transmission service on the Neptune line.

Lower Delaware Valley (LDV) Complaint Proceeding

On December 30, 2004, Jersey Central Power & Light Company (JCP&L) filed a complaint at the FERC against the other four signatories to the LDV Transmission System Agreement (LDV Agreement), including PSE&G. The LDV Agreement, which governs the construction of, and investment in, certain 500 kilovolt (kV) transmission facilities, was entered into by the parties in 1977 and remains in effect until 2027. JCP&L seeks to terminate its construction obligations under the LDV Agreement and to terminate its payment obligations to the other contract signatories under related agreements. PSE&G receives from JCP&L approximately $2.7 million annually under the LDV Agreement and its related agreements. PSE&G, along with the other LDV Agreement signatories, will file a response opposing the JCP&L complaint. At this time, PSE&G cannot predict the outcome of this proceeding.

NRC

PSEG and Power

Nuclear's operation of nuclear generating facilities is subject to continuous regulation by the NRC, a federal agency established to regulate nuclear activities to ensure protection of public health and safety, as well as the security and protection of the environment. Such regulation involves testing, evaluation and modification of all aspects of plant operation in light of NRC safety and environmental requirements. Continuous demonstrations to the NRC that plant operations meet requirements are also necessary. The NRC has the ultimate authority to determine whether any nuclear generating unit may operate. The current operating licenses of Power's nuclear facilities expire in the years shown below:

Facility	Year
Salem 1	2016
Salem 2	2020
Hope Creek	2026
Peach Bottom 2	2033
Peach Bottom 3	2034

The NRC has issued orders to all nuclear power plants to implement compensatory security measures. Some of the requirements formalize a series of security measures that licensees had taken in response to advisories issued by the NRC in the aftermath of the September 11, 2001 terrorist attacks. Nuclear has evaluated these orders for the Salem, Peach Bottom and Hope Creek facilities and does not expect the cost of implementation of the additional NRC measures to be material. Security measures required to be in place by October 2004 have been completed at Salem, Hope Creek and Peach Bottom.

Reactor Vessel Heads

In 2002, the NRC issued a bulletin requiring that all operators of pressurized water reactor (PWR) nuclear units submit certain information related to potential degradation of reactor vessel heads. In 2003, the NRC issued an order to all operators of PWR units concerning reactor vessel head inspections. The order confirms the previous bulletin's requirements and adds more intrusive and frequent future inspections, which apply to Salem 1 and 2. In September 2002, Nuclear provided the requested

information for Salem to the NRC, and performed inspections in accordance with the NRC order for Salem 1 and 2 during 2004 and 2003, respectively. The reactor heads were determined to be satisfactory for continued safe operation. Nuclear plans to replace Salem 1 and 2 reactor heads in 2005 as a preventive measure, during scheduled refueling outages.

Also in 2003, the NRC issued a bulletin requiring that all operators of PWR nuclear units also perform inspections of the reactor vessel lower head, due to leakage observed at another nuclear unit not owned by Power. Bare metal visual examinations were completed during Salem 2's October 2003 outage and Salem 1's April 2004 outage, and no degradation was observed. Nuclear's Hope Creek nuclear unit and Peach Bottom 2 and 3 are unaffected by either of these bulletins as they are boiling water reactor nuclear units. Power cannot predict what other actions the NRC may take on this issue.

920980607

Nuclear Safety Issues

On January 28, 2004, the NRC issued a letter requesting Power to conduct a review of its Salem and Hope Creek nuclear generation facilities to assess the workplace environment for raising and addressing safety issues. Power responded to the letter on February 28, 2004 and had independent assessments of the work environment at both facilities performed. The results of these assessments were provided to the NRC in May 2004. The assessments concluded that Salem and Hope Creek were safe for continued operations, but also identified issues that needed to be addressed.

At an NRC public meeting on June 16, 2004, PSEG outlined its action plan to address these issues, which focused on a safety-conscious work environment, the corrective action program and work management. A letter documenting these plans and commitments was sent to the NRC on June 25, 2004. On July 30, 2004, the NRC provided a letter to PSEG indicating that it had completed its review. The letter indicated that the NRC had not identified any safety violations and that it appeared that the PSEG action plan would address the key findings of both the NRC and PSEG assessments. On August 30, 2004, the NRC provided Power with its mid-cycle performance reviews of Salem and Hope Creek, which detailed the NRC's plan for enhanced oversight related to the work environment. The letter indicated the NRC plans to continue with this heightened oversight until Power has concluded that substantial, sustainable progress has been made, and the NRC has completed a review that confirms Power's conclusions. Under the NRC oversight program, among other things, Power provided the NRC with a report of its progress at a public meeting in December 2004 and began publishing quarterly metrics to demonstrate performance in the fourth quarter of 2004. The next public meeting is scheduled for Spring 2005.

Steam Pipe Failure

On October 24, 2004, Power's Hope Creek nuclear generation facility transitioned to a planned refueling outage following the unit's shutdown on October 10, 2004 due to a steam pipe failure. Power's preliminary investigation revealed equipment and personnel performance issues associated with the shutdown. The NRC also investigated the event and held a public meeting on January 12, 2005. In the meeting, the NRC reviewed its findings, concurring with the root causes and corrective actions that Power had identified. In a letter to the NRC dated January 9, 2005, Power committed to install vibration-monitoring equipment on the "B" Reactor Recirculation Pump prior to the unit's return to service to address pump vibration concerns and replace the pump's shaft during the next refueling outage or any sooner outage of sufficient duration. This commitment was the subject of a January 11, 2005 Confirmatory Action Letter from the NRC. Hope Creek completed its refueling outage and returned to service on January 26, 2005.

For additional information, see Note 14. Commitments and Contingent Liabilities of the Notes.

Other Regulatory Matters

PSEG, PSE&G, Power and Energy Holdings

American Jobs Creation Act of 2004 (Jobs Act)

On October 22, 2004, President Bush signed into law the Jobs Act which provides a phased-in special deduction associated with pre-tax income from certain of PSEG's businesses, including Power's and Global's pre-tax income from domestic generation projects. This special deduction is equal to 3% of qualifying income for years 2005 and 2006, 6% in years 2007 through 2009 and 9% thereafter. This law

is also expected to provide energy tax credits for certain renewable energy projects, including two projects at Global. Additionally, this law provides a one-year window to repatriate earnings from foreign investments and claim a special 85% dividends received tax deduction on such distributions. For additional information see Item 7. MD&A—Critical Accounting Estimates and Note 2. Recent Accounting Standards and Note 17. Income Taxes of the Notes.

PSE&G

Investment Tax Credits (ITC)

For a discussion of an Internal Revenue Service (IRS) proposal that could have a material impact on PSE&G's treatment of ITCs, see Note 14. Commitments and Contingent Liabilities of the Notes.

State Regulation

PSEG, PSE&G, Power and Energy Holdings

The BPU is the regulatory authority that oversees electric and natural gas distribution companies in New Jersey. PSE&G is subject to comprehensive regulation by the BPU including, among other matters, regulation of retail electric and gas distribution rates and service and the issuance and sale of securities. Power's partial ownership of nuclear generating facilities in Pennsylvania, as well as PSE&G's ownership of certain transmission facilities in Pennsylvania, are subject to regulation by the Pennsylvania Public Utility Commission (PPUC), which oversees the electric and natural gas industries in Pennsylvania. PSE&G and Power are also subject to rules and regulations of the New Jersey Department of Environmental Protection (NJDEP) and the New Jersey Department of Transportation (NJDOT).

PSEG is not subject to direct regulation by the BPU, except potentially with respect to certain transfers of control and reporting requirements. Certain subsidiaries of PSEG and Power with operations in New Jersey may be subject to some regulation by the BPU, with respect to energy supply (BGS and BGSS), certain asset sales, transfers of control, reporting requirements and affiliate standards.

Various Power subsidiaries and Energy Holdings' subsidiaries are subject to some state regulation in other individual states where they operate facilities, including New York, Connecticut, Indiana, Ohio, Texas, California, Hawaii and New Hampshire.

PSE&G and Power

BGSS Filing

On April 9, 2004, PSE&G received the Administrative Law Judge's (ALJ) Initial Decision on the two remaining issues from the 2003/2004 BGSS Commodity Charge Proceeding, filed on May 30, 2003. Under the ALJ's Initial Decision, the partial settlement executed and submitted by the parties was approved. Moreover, under the Initial Decision, the New Jersey Rate Payer Advocate's (RPA) proposal to return pipeline refunds previously received by Power in September and November 2002 and the deferred cost balance as of May 1, 2002 retained by Power to commercial and industrial customers was rejected. On August 18, 2004, the BPU approved a stipulation authorizing a refund of approximately $6 million from Power to commercial and industrial customers in September 2004 and gave final approval to the partial settlement.

On May 28, 2004, PSE&G filed its 2004/2005 BGSS commodity charge filing, requesting an increase in its BGSS commodity charges to its residential gas customers of approximately $47 million in annual revenues effective October 1, 2004 or approximately 3% for the class average residential heating customer. A provisional settlement was approved by the BPU on October 5, 2004. Under this settlement, PSE&G's filed BGSS rates became effective on October 5, 2004 on a provisional basis, subject to refund with interest. The BPU also ordered that PSE&G's filing be transferred to the Office of Administrative Law (OAL) for a full review and an Initial Decision. On January 4, 2005, the parties entered into a final settlement, which was approved by the ALJ on January 6, 2005. Under the final settlement, the provisional rates became final and all other issues raised during the proceeding were resolved. The BPU approved the ALJ Decision and Settlement with no changes on February 1, 2005.

PSE&G

Remediation Adjustment Clause (RAC) Filing

PSE&G is currently implementing a program to address potential environmental concerns regarding its former Manufactured Gas Plant (MGP) properties in cooperation with and under the NJDEP. On March 5, 2004, the BPU approved PSE&G's RAC-10 petition, filed in June 2003, for the recovery of approximately $35 million of certain environmental remediation program expenditures for the period August 1, 2001 through July 31, 2002. The Final Decision and Order approved the Stipulation of Settlement from December 16, 2003, without exception.

On April 22, 2004, PSE&G filed its RAC-11 filing with the BPU to recover approximately $36 million of remediation program expenditures for the period from August 1, 2002 through July 31, 2003. Public hearings were held in July 2004. On September 10, 2004, the ALJ issued an Initial Decision recommending approval of the settlement reached between all parties, allowing PSE&G to recover all requested costs. This will result in PSE&G recovering an additional $0.4 million annually in remediation program expenditures. On October 5,

920980611

2004, the BPU issued a Final Decision and Order approving, in its entirety, the ALJ's Initial Decision recommending acceptance of the settlement.

Cost Recovery Mechanism

EDECA required that the BPU provide electric and natural gas customers with the opportunity to choose a supplier for some or all electric or natural gas customer account services (CAS). On July 1, 2004, PSE&G filed a petition with the BPU to implement the CAS Cost Recovery Mechanism for both the electric and gas operations. The request petitions the BPU for the approval to recover $4 million of CAS costs and accumulated interest resulting from implementing PSE&G's dual billing for its delivery costs and for the third-party suppliers' commodity charges as a result of customer migration from PSE&G. On September 21, 2004, the case was transferred to the OAL as a contested case.

Deferral Audit

The BPU Energy and Audit Division conducts audits of deferred balances. A draft Deferral Audit—Phase II report relating to the 12-month period ended December 31, 2003 was released by the consultant to the BPU in February 2005. The draft report addressed the Societal Benefits Clause (SBC), Market Transition Charge (MTC) and Non-Utility Generation (NUG) deferred balances.

While the consultant to the BPU found that the deferral balances complied in all material respects with the BPU Orders regarding such deferrals, the consultant noted that the BPU Staff had raised certain questions with respect to the reconciliation method PSE&G employed in calculating the overrecovery of its MTC and other charges during the four-year transition period. PSE&G and the BPU Staff are continuing discussions to resolve these questions and, if a resolution cannot be achieved, a BPU proceeding may be instituted to consider the issues raised.

While PSE&G believes the MTC methodology it used was fully litigated and resolved, without exception, by the BPU and other intervening parties in its previous electric base rate case, deferral audit and deferral proceeding that were approved by the BPU in its order of April 22, 2004, and that such order is non-appealable, PSE&G cannot predict the impact of the outcome of any such proceeding, which could be material.

Levelized Gas Adjustment Clause (LGAC)/BGSS Audit

The BPU's Division of Audit reviews gas costs of utilities in New Jersey on a regular basis. As part of its regular review in November 2004, the BPU commenced an audit of the gas supply costs incurred during the period October 1, 1999 through September 30, 2004. The outcome of the audit cannot be determined at this time.

New Jersey Clean Energy Program

The BPU has approved a new funding requirement for each New Jersey utility applicable to Renewable Energy and Energy Efficiency programs for the years 2005 to 2008. The sum of PSE&G's electric and gas funding requirement for 2005 is $82 million and grows to $137 million in 2008 for a four-year total of $406 million, a liability that has been recorded at discounted present value with an offsetting regulatory asset. The BPU is seeking new program managers for the Energy Efficiency program, currently being administered by the utilities. The transition from the utilities to the program managers is expected to take place in mid-2005.

International Regulation

Energy Holdings

Global

Global's electric distribution facilities in South America and Oman are rate-regulated enterprises. Rates charged to customers are established by government authorities and are viewed by Global as currently sufficient to cover all operating costs and provide a return. Global can give no assurances that future rates will be established at levels sufficient to cover such costs, provide a return on its investments or generate

adequate cash flow to pay principal and interest on its debt or to enable it to comply with the terms of its debt agreements.

Brazil

RGE is regulated by Agencia Nacional de Energia Eletrica (ANEEL), the national regulatory authority. ANEEL's functions include granting and supervising electric utility concessions, approving electricity tariffs, issuing regulations and auditing distribution systems' performance. The rate setting process for Brazilian distribution companies has two components: an annual adjustment for which RGE applies every April which is embedded in the concession contract and a rate case revision, which was last conducted in 2003 and will be repeated again every fifth year.

In 2004, RGE received a 15% tariff increase adjustment based on 2003 annual inflation. In April 2005, RGE will apply for the annual rate case adjustment. Based on 2004 annual inflation and other postponed increases, Global expects that RGE should be granted a 15% tariff increase, although no assurances can be given.

Chile

Distribution companies in Chile, including Chilquinta Energia S.A. (Chilquinta), Sociedad Austral de Electricidad S.A. (SAESA) and other members of the SAESA Group, are subject to rate regulation by the Comision Nacional de Energia (CNE), a national governmental regulatory authority. The Chilean regulatory framework has been in existence since 1982, with rates set every four years based on a model company for each typical concession area. The tariff which distribution companies charge to regulated customers consists of two components: the actual cost of energy purchased plus an additional amount to compensate for the value added in distribution (DVA tariff). The DVA tariff considers allowed losses incurred in the distribution of electricity, administrative costs of providing service to customers, costs of maintaining and operating the distribution systems and an annual return on investment of 6% to 14% over inflation based on the replacement cost of distribution assets. Changes in electricity distribution companies' cost of energy are passed through to customers, with no impact on the distributors' margins (equal to the DVA tariff). Therefore, distributors, including members of the SAESA Group and Chilquinta, should not be affected by changes in the generation sector which affect prices. The most recent tariff adjustments for members of the SAESA Group and Chilquinta occurred in 2004 and have been reviewed and approved by CNE.

Peru

Distribution companies in Peru, including Luz del Sur (LDS), are subject to tariff regulation by the Organismo Supervisor de la Inversión en Energí a, a national governmental regulatory authority. The Peruvian regulatory framework has been in existence since 1992, with tariffs set every four years based on a model company. The tariff which distribution companies charge to regulated customers consists of two components: the actual cost of energy purchased plus an additional amount to compensate for the value added in distribution (DVA tariff). The DVA tariff considers allowed losses incurred in the distribution of electricity, administrative costs of providing service to customers, costs of maintaining and operating the distribution systems and an annual return on investment of 8% to 16%, based on the replacement cost of distribution assets. Changes in electricity distribution companies' cost of energy are passed through to customers, with no impact on the distributors' margins (equal to the DVA tariff). Therefore, distributors, including LDS, should not be affected by changes in the generation sector which affect prices. The most recent tariff adjustments for LDS occurred in 2001 and the 2005 tariff setting process is currently in progress. New tariffs will be applicable as of November 1, 2005.

SEGMENT INFORMATION

Financial information with respect to the business segments of PSEG, PSE&G, Power and Energy Holdings is set forth in Note 20. Financial Information by Business Segments of the Notes.

920980615

ENVIRONMENTAL MATTERS

PSEG, PSE&G, Power and Energy Holdings

Federal, regional, state and local authorities regulate the environmental impacts of PSEG's operations within the U.S. Laws and regulations particular to the region, country or locality where PSEG's operations are located govern the environmental impacts associated with its foreign operations. For both domestic and foreign operations, areas of regulation may include air quality, water quality, site remediation, land use, waste disposal, aesthetics, impact on global climate and other matters.

To the extent that environmental requirements are more stringent and compliance more costly in certain states where PSEG operates compared to other states that are part of the same market, such rules may impact its ability to compete within that market. Due to evolving environmental regulations, it is difficult to project expected costs of compliance and its impact on competition. For additional information related to environmental matters, see Item 3. Legal Proceedings.

PSEG, Power and Energy Holdings

Air Pollution Control

The Federal Clean Air Act (CAA) and its implementing regulations require controls of emissions from sources of air pollution and also impose record keeping, reporting and permit requirements. Facilities in the U.S. that Power and Energy Holdings operate or in which they have an ownership interest are subject to these Federal requirements, as well as requirements established under state and local air pollution laws applicable where those facilities are located. Except as noted below, capital costs of complying with air pollution control requirements through 2009 are included in Power's estimate of construction expenditures in Item 7. MD&A—Capital Requirements.

Prevention of Significant Deterioration (PSD)/New Source Review (NSR)

For a discussion of PSD/NSR, see Note 14. Commitments and Contingent Liabilities of the Notes.

Sulfur Dioxide (SO_2)/Nitrogen Oxide (NO_x)

To reduce emissions of SO_2, the CAA sets a cap on total SO_2 emissions from affected units and allocates SO_2 allowances (each allowance authorizes the emission of one ton of SO_2) to those units. Generation units with emissions greater than their allocations can obtain allowances from sources that have excess allowances. At this time, Power does not expect to incur material expenditures to continue complying with the SO_2 emissions program.

The EPA has issued regulations (commonly known as the NO_x State Implementation Plan (SIP) Call) requiring the 19 states in the eastern half of the U.S. and the District of Colombia to reduce and cap NO_x emissions from power plant and industrial sources. The NO_x reduction requirements are consistent with requirements already in place in New Jersey, New York, Connecticut and Pennsylvania, and therefore have not had an additional impact on the capacity available from Power's facilities in those states. Power has been implementing measures to reduce NO_x emissions at several of its units (including the installation of selective catalytic reduction systems at the Mercer Generating Station), which should reduce the impact of any further increases to the costs of allowances. New facilities that Power developed in Ohio and Indiana became subject to rules that those states have promulgated to comply

with the NO_x SIP Call. Because the rules in Ohio and Indiana both set aside allowances for allocation to new sources, Power did not experience any material adverse effects from complying with this program in these states.

In 1997, the EPA adopted a new air quality standard for fine particulate matter and a revised air quality standard for ozone. In 2004, the EPA identified and designated areas of the U.S. that fail to meet the revised federal health standard for ozone or the new federal health standard for fine particulates. States are expected to develop regulatory measures necessary to achieve and maintain the health standards, which may require reductions in NO_x and SO_2 emissions. Additional NO_x and SO_2 reductions also may be required to satisfy requirements of an EPA rule protecting visibility in many of the nation's Class 1 (pristine) environmental areas, including most areas near Power's facilities. Power cannot at this time determine whether any costs it may incur to comply with these standards would be material.

In December 2003, the EPA announced its intent to propose an Interstate Air Quality Rule (IAQR) (which was renamed as the Clean Air Interstate Rule (CAIR)) that would identify 29 states and the District of Columbia as contributing significantly to the levels of fine particulates and/or eight-hour ozone in downwind states. New Jersey, New York, Pennsylvania and Connecticut are among the states the EPA lists in the proposed CAIR. Based on state obligations to address interstate transport of pollutants under the CAA, the EPA is proposing a two-phased emission reduction program for SO_2 and NO_x, with Phase 1 beginning in 2010 and Phase 2 beginning in 2015. The EPA is recommending that the program be implemented through a cap-and-trade program, although states are not required to proceed in this manner. States would have to submit plans to the EPA for complying with the rule within 18 months of publication of the notice of final rulemaking. The rule is anticipated to be finalized or re-proposed in 2005. Alternatively, Congress has also expressed interest in providing legislation to further improve air quality. Power cannot at this time determine whether any costs it may incur to comply with these standards would be material.

Carbon Dioxide (CO_2) Emissions

Countries participating in the Kyoto Protocol will be required to achieve material reductions of CO_2 and certain other greenhouse gases between 2008 and 2012. Although the U.S. has not ratified the treaty, Global's assets in Europe will be affected by implementation of the Kyoto Protocol, as adopted through regulations by the European Union (EU). At this time, these regulations are not anticipated to have a material effect on operations at Global's European assets in Poland and Italy.

In 2002, Power announced a voluntary agreement that calls for a December 31, 2005 goal of reducing the annual average CO_2 emission rate of its New Jersey fossil fuel-fired electric generating units by 15% below the 1990 average annual CO_2 emission rate. Fossil also made a $1.5 million payment to the NJDEP to assist in the development of landfill gas projects and has agreed to make an additional payment equal to $1 per ton of CO_2 emitted greater than the 15% goal, up to $1.5 million, if that reduction is not achieved.

PSEG joined the EPA Climate Leaders Program in February 2002. On January 13, 2004, PSEG established a goal of reducing its CO_2 emissions intensity by 18% per MWh generated (nuclear excluded) from 2000 levels by December 31, 2008. The goal would in part be met by re-powering the Bergen, Linden and Albany plants. PSEG has developed an emission inventory and is currently working with the EPA Climate Leaders Program to obtain approval of the inventory management plan.

There continues to be a debate within the U.S. over the direction of change in domestic climate policy. Several states, primarily in the Northeastern U.S., are developing state-specific or regional legislative initiatives to stimulate CO_2 emission reductions in the electric power industry. For example, New York initiated the Regional Greenhouse Gas Initiative (RGGI) in April 2003 and the NJDEP in 2004 proposed amendments to its regulations governing air pollution control that would designate CO_2 as an air contaminant subject to regulation. Currently, in the RGGI, nine Northeastern states are participating in discussions intended to lead to a regional program to cap CO_2 emissions from the electric power sector in the region. The outcome of this initiative cannot be determined at this time; however, adoption of stringent CO_2 emission reduction requirements in the Northeast could materially impact Power's operations.

Other Air Pollutants

The CAA directed the EPA to study potential public health impacts of mercury and nickel hazardous air pollutants (HAP) emitted from electric utility steam generating units. In December 2000, the EPA announced its intent to regulate HAP emissions from coal-fired and oil-fired steam units by requiring Maximum Achievable Control Technology (MACT) standards for these units. The EPA proposed the MACT standards in December 2003 and expects to promulgate a final rule by March 2005, with compliance expected by December 2007. PSEG is evaluating the potential impact of these proposed standards.

The EPA announced in December 2003 its intent to propose alternative rules for addressing emissions of mercury from electric generating sources. The first alternative proposes to regulate mercury through the establishment of a MACT standard applicable on a unit-by-unit basis or through a cap-and-trade program. The MACT standard would establish mercury emission limits for all new and existing units and reduce nationwide mercury emissions by approximately 29% by December 2007. The second option requires the EPA to rescind its December 2000 announcement to regulate mercury as a HAP through a MACT standard and to regulate mercury through a cap-and-trade program to be implemented by changes to the states' individual SIPs that establish decreasing emission caps in 2010 and 2018. As part of the December 15, 2003

proposal, the EPA is also proposing to set nickel MACT emission limits for oil-fired electric steam generating units.

New Jersey and Connecticut have already adopted standards for the reduction of emissions of mercury from coal-fired electric generating units. The Connecticut legislation requires coal-fired power plants in Connecticut to achieve either an emissions limit or a 90% mercury removal efficiency through technology installed to control mercury emissions effective in July 2008. The regulations in New Jersey require coal-fired electric generating units in New Jersey to meet certain emission limits or reduce emissions by 90% by December 15, 2007. Companies that are parties to multi-pollutant reduction agreements are permitted to postpone such reductions on half of their coal-fired electric generating capacity until December 15, 2012. Power has a multi-pollutant reduction agreement with the NJDEP as a result of a consent decree that resolved issues arising out of the PSD and NSR air pollution control programs at the Hudson, Mercer and Bergen facilities. Substantial uncertainty exists regarding the feasibility of achieving the reductions in mercury emissions required by the New Jersey regulations and Connecticut statute; however, the costs of technology believed to be capable of meeting these emissions limits at Power's coal-fired unit in Connecticut by July 2008 and at its Mercer Station by December 15, 2007 are included in Power's capital expenditure forecast.

Water Pollution Control

The Federal Water Pollution Control Act (FWPCA) prohibits the discharge of pollutants to waters of the U.S. from point sources, except pursuant to a National Pollutant Discharge Elimination System (NPDES) permit issued by the EPA or by a state under a federally authorized state program. The FWPCA authorizes the imposition of technology-based and water quality-based effluent limits to regulate the discharge of pollutants into surface waters and ground waters. The EPA has delegated authority to a number of state agencies, including the NJDEP, to administer the NPDES program through state acts. The New Jersey Water Pollution Control Act (NJWPCA) authorizes the NJDEP to implement regulations and to administer the NPDES program with EPA oversight, and to issue and enforce New Jersey Pollutant Discharge Elimination System (NJPDES) permits. Power and Energy Holdings also have ownership interests in domestic facilities in other jurisdictions that have their own laws and implement regulations to control discharges to their surface waters and ground waters that directly govern Power's or Energy Holdings' facilities in these jurisdictions.

The EPA is conducting a rulemaking under FWPCA Section 316(b), which requires that cooling water intake structures reflect the best technology available (BTA) for minimizing "adverse environmental impact." Phase I of the rule covering new facilities became effective on January 17, 2002. None of the projects that Power currently has under construction or in development is subject to the Phase I rule. The Phase II rule covering large existing power plants became effective on September 7, 2004. The regulations provide the following five alternative methods by which a facility can demonstrate that it complies with the requirement for BTA for minimizing adverse environmental impacts associated with cooling water intake structures: (1) reduce flow commensurate with a closed-cycle system or reduce intake velocity; (2) meet applicable performance standards for reduction of entrainment and impingement mortality through the use of the existing design, construction, operational or restoration measures; (3) meet applicable performance standards through a combination of existing and proposed design, construction, operational or restoration measures; (4) installation of a design and construction technology specified by the regulation or pre-approved by the agency; and (5) a site-specific determination that the cost to the facility to meet the performance standards is "significantly greater" than either (a) the costs that the EPA estimated for that type of facility or (b) the environmental benefits of complying with the performance standards. Although the rule applies to all of Power's electric generating units that use surface waters for once-through cooling purposes, the impact of the rule to Power and the rule's ability to withstand legal challenges cannot be determined at this time. If

application of the Phase II rules by the states requires the retrofitting of cooling water intake structures at Power's existing facilities, additional material capital expenditures could be required to modify the existing plants to enable their continued operations. Several environmental groups, the Attorneys General of six Northeastern states, the Utility Water Act Group and several of its members, including Power, are parties to litigation challenging the Phase II rule. The case will be heard in the U.S. Court of Appeals for the Second Circuit. The states and environmental groups have indicated that they intend to challenge the use of restoration and other measures to satisfy performance standards as well as a state's ability to make site-specific determinations based on cost tests. A decision issued in February 2004 by the Second Circuit in litigation challenging the Phase I rule (new facilities) struck down that rule's provision allowing for the use of

restoration measures to satisfy the specified performance standards. An unfavorable decision in the Phase II litigation could have a material impact on Power's ability to renew its NJPDES permits at its larger once-through cooled plants without significant upgrades to their existing intake structures and cooling systems.

PSE&G and Power

Federal Comprehensive Environmental Response, Compensation and Liability Act of 1980 (CERCLA) and New Jersey Spill Compensation and Control Act (Spill Act)

CERCLA and the Spill Act authorize Federal and state trustees for natural resources to assess damages against persons who have discharged a hazardous substance, causing an injury to natural resources. Pursuant to the Spill Act, the NJDEP requires persons conducting remediation to characterize injuries to natural resources and to address those injuries through restoration or damages. The NJDEP adopted regulations concerning site investigation and remediation that require an ecological evaluation of potential damages to natural resources in connection with an environmental investigation of contaminated sites. In 2003, the NJDEP issued a policy directive memorializing its efforts to recover natural resource damages and its intent to continue to pursue the recovery of natural resource damages. The NJDEP also issued guidance to assist parties in calculating their natural resource damage liability for settlement purposes, but has stated that those calculations are applicable only for those parties that volunteer to settle a claim for natural resource damages before a claim is asserted by the NJDEP. PSE&G and Power cannot assess the magnitude of the potential financial impact of this regulatory change. See Note 14. Commitments and Contingent Liabilities of the Notes for additional information.

Because of the nature of PSE&G's and Power's respective businesses, including the production and delivery of electricity, the distribution of gas and, formerly, the manufacture of gas, various by-products and substances are or were produced or handled that contain constituents classified by Federal and state authorities as hazardous. For discussions of these hazardous substance issues and a discussion of potential liability for remedial action regarding the Passaic River, see Note 14. Commitments and Contingent Liabilities of the Notes. For a discussion of remediation/clean-up actions involving PSE&G and Power, see Item 3. Legal Proceedings.

Uranium Enrichment Decontamination and Decommissioning Fund

In accordance with the Energy Policy Act, domestic entities that own nuclear generating stations are required to pay into a decontamination and decommissioning fund, based on their past purchases of U.S. government enrichment services. Since these amounts are being collected from PSE&G's customers over a period of 15 years, this obligation remained with PSE&G following the generation asset transfer to Power in 2000. PSE&G's obligation for the nuclear generating stations in which it had an interest was $75 million (adjusted for inflation). As of December 31, 2004, PSE&G had paid $64 million, resulting in a balance due of $11 million. As of December 31, 2004, Power also had a balance due of approximately $2 million, which related to interests in certain nuclear units it purchased. These amounts are payable to the DOE in annual installments through October 2006.

PSE&G and Power

Permit Renewals

In June 2001, the NJDEP issued a renewed NJPDES permit for Salem, expiring in July 2006, allowing for the continued operation of Salem with its existing cooling water system. A renewal

application prepared in accordance with the new Phase II 316(b) rule will be filed by February 1, 2006. Recently published regulations pursuant to Section 316(b) of the FWPCA require existing facilities, including Salem, to demonstrate that their cooling water intake structures reflect the BTA for minimizing adverse environmental impact through one of several options including the reduction of cooling water intake commensurate with closed cycle cooling. For additional information, see Environmental Matters—Water Pollution Control. The NJDEP, in anticipation of the company's application to renew the permit for Salem, has advised PSEG that it strongly recommends that cooling water intake flow at the Salem facility be reduced commensurate with closed cycle cooling. The installation of structures at the Salem facility to reduce cooling water intake flow commensurate with closed cycle cooling would result in material costs of compliance for Power. Power is

evaluating its ability to demonstrate compliance with the new Phase II 316(b) rule through all applicable options available under the new rule.

The consultant hired by the NJDEP to review the NJPDES permit renewal application and studies filed in the 1980s for the Hudson generating station recommended that the Hudson generating station be retrofitted to operate with closed cycle cooling to address alleged adverse impacts associated with the thermal discharge and intake structure. Power proposed certain modifications to the intake structure in filings with the NJDEP in 1998. In the fourth quarter of 2004, Power received a modified NJPDES permit for its Hudson generating station that required the modification to the intake structures that Power had proposed consistent with the timing of upgrades of air pollution control technology pursuant to the consent decree that resolved issues related to NSR and PSD for Hudson Unit 2, but did not require Power to retrofit the station to operate with closed cycle cooling.

The NJDEP has advised Power that it is reviewing a NJPDES permit renewal application and recent studies for the Mercer station and, in connection with these filings, will be re-examining the effects of the Mercer station's cooling water system pursuant to FWPCA. Power cannot predict the timing and/or outcome of NJDEP's review. An unfavorable outcome could require significant modifications to the Mercer station's cooling water system at material cost.

Title V Operating Permits

Title V of the CAA and Sub-Chapter 22 of the New Jersey Administrative Code require that certain air emissions sources obtain Operating Permits issued by NJDEP. All Power generating facilities are required to be included in Title V Operating Permits. The costs of compliance associated with any new requirements imposed by these permits are not known at this time, but may be material.

Nuclear Fuel Disposal

For a discussion of nuclear fuel disposal, see Note 14. Commitments and Contingent Liabilities of the Notes.

Low Level Radioactive Waste (LLRW)

As a by-product of their operations, nuclear generation units produce LLRW. Such wastes include paper, plastics, protective clothing, water purification materials and other materials. LLRW materials are accumulated on site and disposed of at licensed permanent disposal facilities. New Jersey, Connecticut and South Carolina have formed the Atlantic Compact, which gives New Jersey nuclear generators, including Power, continued access to the Barnwell LLRW disposal facility which is owned by South Carolina. Power believes that the Atlantic Compact will provide for adequate LLRW disposal for Salem and Hope Creek through the end of their current licenses, although no assurances can be given. Both Power and Exelon have on-site LLRW storage facilities for Salem, Hope Creek and Peach Bottom, which have the capacity for at least five years of temporary storage for each facility.

PSE&G

MGP Remediation Program

For information regarding PSE&G's MGP Remediation Program, see Note 14. Commitments and Contingent Liabilities of the Notes.

ITEM 2. PROPERTIES

PSEG and Services

PSEG does not own any property. All property is owned by PSEG's subsidiaries.

Services leases substantially all of a 25-story office tower for PSEG's corporate headquarters at 80 Park Plaza, Newark, New Jersey, together with an adjoining three-story building. In addition, the Maplewood Test Services in Maplewood, New Jersey was transferred to Services from Power in January 2004.

PSE&G

PSE&G's First and Refunding Mortgage (Mortgage), securing the bonds issued thereunder, constitutes a direct first mortgage lien on substantially all of PSE&G's property.

PSE&G's electric lines and gas mains are located over or under public highways, streets, alleys or lands, except where they are located over or under property owned by PSE&G or occupied by it under easements or other rights. These easements and other rights are deemed by PSE&G to be adequate for the purposes for which they are being used.

PSE&G believes that it maintains adequate insurance coverage against loss or damage to its principal properties, subject to certain exceptions, to the extent such property is usually insured and insurance is available at a reasonable cost.

Electric Transmission and Distribution Properties

As of December 31, 2004, PSE&G's transmission and distribution system included approximately 21,735 circuit miles, of which approximately 7,754 circuit miles were underground, and approximately 757,646 poles, of which approximately 525,872 poles were jointly-owned. Approximately 99% of this property is located in New Jersey.

In addition, as of December 31, 2004, PSE&G owned five electric distribution headquarters and four subheadquarters in four operating divisions, all located in New Jersey.

Gas Distribution Properties

As of December 31, 2004, the daily gas capacity of PSE&G's 100%-owned peaking facilities (the maximum daily gas delivery available during the three peak winter months) consisted of liquid petroleum air gas (LPG) and liquefied natural gas (LNG) and aggregated 2,973,000 therms (approximately 2,886,000 cubic feet on an equivalent basis of 1,030 Btu/cubic foot) as shown in the following table:

Plant	Location	Daily Capacity (Therms)
Burlington LNG	Burlington, NJ	773,000
Camden LPG	Camden, NJ	280,000
Central LPG	Edison Twp., NJ	960,000
Harrison LPG	Harrison, NJ	960,000

Total	2,973,000

As of December 31, 2004, PSE&G owned and operated approximately 17,064 miles of gas mains, owned 12 gas distribution headquarters and two subheadquarters, all in two operating regions located in New Jersey and owned one meter shop in New Jersey serving all such areas. In addition, PSE&G operated 61 natural gas metering or regulating stations, all located in New Jersey, of which 28 were located on land owned by customers or natural gas pipeline suppliers and were operated under lease, easement or other similar arrangement. In some instances, the pipeline companies owned portions of the metering and regulating facilities.

Office Buildings and Facilities

PSE&G rents office space from Services as its headquarters in Newark, New Jersey. PSE&G also leases office space at various locations throughout New Jersey for district offices and offices for various corporate

920980627

groups and services. PSE&G also owns various other sites for training, testing, parking, records storage, research, repair and maintenance, warehouse facilities and for other purposes related to its business.

In addition to the facilities discussed above, as of December 31, 2004, PSE&G owned 41 switching stations in New Jersey with an aggregate installed capacity of 21,203 megavolt-amperes and 242 substations with an aggregate installed capacity of 7,652 megavolt-amperes. In addition, four substations in New Jersey having an aggregate installed capacity of 109 megavolt-amperes were operated on leased property.

Power

Power rents office space from Services as its headquarters in Newark, New Jersey. Other leased properties include office, warehouse, classroom and storage space, primarily located in New Jersey. Power also owns the Central Maintenance Shop at Sewaren, New Jersey.

Power has a 57.41% ownership interest in approximately 13,000 acres in the Delaware River Estuary region to satisfy the condition of the NJPDES permit issued for Salem. Power also owns several other facilities, including the on site Nuclear Administration and Processing Center buildings.

Power has a 13.91% ownership interest in the 650-acre Merrill Creek Reservoir in Warren County, New Jersey and approximately 2,158 acres of land surrounding the reservoir. The reservoir was constructed to store water for release to the Delaware River during periods of low flow. Merrill Creek is jointly-owned by seven companies that have generation facilities along the Delaware River or its tributaries and use the river water in their operations.

Power believes that it maintains adequate insurance coverage against loss or damage to its plants and properties, subject to certain exceptions, to the extent such property is usually insured and insurance is available at a reasonable cost. For a discussion of nuclear insurance, see Note 14. Commitments and Contingent Liabilities of the Notes.

http://www.sec.gov/Archives/edgar/data/81033/000005011705000700/e30200.htm

920980628

As of December 31, 2004, Power's share of installed generating capacity was 14,607 MW, as shown in the following table:

OPERATING POWER PLANTS

Name	Location	Total Capacity (MW)	% Owned	Owned Capacity (MW)	Principal Fuels Used	Mission
Steam:						
Hudson	NJ	991	100%	991	Coal/Gas	Load Following
Mercer	NJ	648	100%	648	Coal/Gas	Load Following
Sewaren	NJ	453	100%	453	Gas/Oil	Load Following
Linden(F)	NJ	430	100%	430	Oil	Load Following
Keystone(A)(B)	PA	1,700	23%	388	Coal	Base Load
Conemaugh(A)(B)	PA	1,700	23%	382	Coal	Base Load
Kearny	NJ	300	100%	300	Oil	Load Following
Albany(F)	NY	376	100%	376	Gas/Oil	Load Following
Bridgeport Harbor	CT	503	100%	503	Coal/Oil	Base Load
New Haven Harbor	CT	448	100%	448	Oil/Gas	Load Following
Total Steam		7,549		4,919		
Nuclear:						
Hope Creek(G)	NJ	1,049	100%	1,049	Nuclear	Base Load
Salem 1 & 2(A)(G)	NJ	2,304	57%	1,323	Nuclear	Base Load
Peach Bottom 2 & 3(A)(C)	PA	2,224	50%	1,112	Nuclear	Base Load
Total Nuclear		5,577		3,484		
Combined Cycle:						
Bergen	NJ	1,221	100%	1,221	Gas/Oil	Load Following
Lawrenceburg	IN	1,096	100%	1,096	Gas	Load Following
Waterford	OH	821	100%	821	Gas	Load Following
Total Combined Cycle		3,138		3,138		
Combustion Turbine:						
Essex	NJ	617	100%	617	Gas/Oil	Peaking
Edison	NJ	504	100%	504	Gas/Oil	Peaking
Kearny	NJ	443	100%	443	Gas/Oil	Peaking
Burlington	NJ	557	100%	557	Gas/Oil	Peaking
Linden	NJ	324	100%	324	Gas/Oil	Peaking
Mercer	NJ	129	100%	129	Oil	Peaking
Sewaren	NJ	129	100%	129	Oil	Peaking

Bayonne	NJ	42	100%	42	Oil	Peaking
Bergen	NJ	21	100%	21	Gas	Peaking
National Park	NJ	21	100%	21	Oil	Peaking
Kearny	NJ	21	100%	21	Gas	Peaking
Linden(F)	NJ	21	100%	21	Gas/Oil	Peaking
Salem(A)	NJ	38	57%	22	Oil	Peaking
Bridgeport Harbor	CT	10	100%	10	Oil	Peaking
Total Combustion Turbine		2,877		2,861		
Internal Combustion:						
Conemaugh(A)(B)	PA	11	23%	2	Oil	Peaking
Keystone(A)(B)	PA	11	23%	3	Oil	Peaking
Total Internal Combustion		22		5		
Pumped Storage:						
Yards Creek(A)(D)(E)	NJ	400	50%	200		Peaking
Total Operating Generation Plants		19,563		14,607		

(A)Power's share of jointly-owned facility.
(B)Operated by Reliant Energy.
(C)Operated by Exelon Generation.
(D)Operated by JCP&L.
(E) Excludes energy for pumping and synchronous condensers.
(F) These assets are scheduled for retirement within the next five years, partially dependent upon new generation going into service discussed below.
(G)Pursuant to the Nuclear OSC, operations of these facilities were transferred from Power to Exelon Generation on January 17, 2005. See Item 1. Business—Power—Nuclear.

920980630

As of December 31, 2004, Power had generating capacity in construction or advanced development, as shown in the following table:

POWER PLANTS IN CONSTRUCTION OR ADVANCED DEVELOPMENT

Name	Location	Total Capacity (MW)	% Owned	Owned Capacity (MW)	Principal Fuels Used	Scheduled In Service Date
Combined Cycle:						
Bethlehem	NY	763	100%	763	Gas	2005
Linden	NJ	1,220	100%	1,220	Gas	2006
Total Construction		1,983		1,983		
Nuclear Uprates	NJ/PA	185	Various	162	Nuclear	2005-2008
Total Advanced Development		185		162		

Projected Capacity	Total Owned Capacity (MW)
Total Owned Operating Generation Plants	14,607
Under Construction	1,983
Advanced Development	162
Less: Planned Retirements	(827)
Projected Capacity	15,925

Energy Holdings

Energy Holdings rents office space from Services as its headquarters in Newark, New Jersey.

Energy Holdings believes that it maintains adequate insurance coverage for properties in which its subsidiaries have an equity interest, subject to certain exceptions, to the extent such property is usually insured and insurance is available at a reasonable cost.

Global has invested in the following generation facilities that were in operation as of December 31, 2004:

OPERATING POWER PLANTS

Name	Location	Total Capacity (MW)	% Owned	Owned Capacity (MW)	Principal Fuels Used
United States					
Texas Independent Energy, L.P. (TIE)					
Guadalupe Power Partners, L.P. (Guadalupe)	TX	1,000	100%	1,000	Natural gas
Odessa-Ector Power Partners, L.P. (Odessa)	TX	1,000	100%	1,000	Natural gas
Total TIE		2,000		2,000	
Kalaeloa Partners L.P. (Kalaeloa)	HI	209	50%	105	Oil
GWF Power Systems, L.P. (GWF)					
Bay Area I	CA	21	50%	10	Petroleum coke
Bay Area II	CA	21	50%	10	Petroleum coke
Bay Area III	CA	21	50%	10	Petroleum coke
Bay Area IV	CA	21	50%	10	Petroleum coke
Bay Area V	CA	21	50%	10	Petroleum coke
Total GWF		105		50	
Hanford L.P. (Hanford)	CA	27	50%	14	Petroleum coke
Thermal Energy Development Partnership L.P. (Tracy)	CA	21	35%	7	Biomass
GWF Energy LLC (GWF Energy)					
Hanford—Peaker Plant	CA	95	60%	57	Natural gas
Henrietta—Peaker Plant	CA	97	60%	58	Natural gas
Tracy—Peaker Plant	CA	171	60%	103	Natural gas
Total GWF Energy		363		218	
SEGS III	CA	30	9%	3	Solar
Bridgewater	NH	16	40%	6	Biomass
Conemaugh	PA	15	50%	8	Hydro
Total United States		2,786		2,411	
International					
PPN Power Generating Company Limited (PPN)	India	330	20%	66	Naphtha/Natural gas
Prisma					
Crotone	Italy	20	25%	5	Biomass
Bando D'Argenta I	Italy	20	50%	10	Biomass
Strongoli	Italy	40	25%	10	Biomass
Total Prisma		80		25	
Electroandes S.A. (Electroandes)	Peru	183	100%	183	Hydro
Skawina CHP Plant (Skawina)	Poland	590	75%	439	Coal
Elektrocieplownia Chorzow Sp. Z o.o. (ELCHO)	Poland	220	90%	198	Coal
Turboven					

Maracay	Venezuela	60	50%	30	Natural gas
Cagua	Venezuela	60	50%	30	Natural gas
Total Turboven		120		60	
Turbogeneradores de Maracay (TGM)	Venezuela	40	9%	4	Natural gas
Dhofar Power Company S.A.O.C. (Dhofar Power)	Oman	240	81%	194	Natural gas
SAESA Group	Chile	72	100%	72	Oil/Hydro/Wind
Total International		1,875		1,241	
Total Operating Power Plants		4,661		3,652	

As of December 31, 2004, Global had invested in the following generation facilities that were in construction or advanced development:

POWER PLANTS IN CONSTRUCTION

Name	Location	Total Capacity (MW)	% Owned	Owned Capacity (MW)	Principal Fuels Used	Scheduled In Service Date
Construction						
SAESA Group	Chile	43	100%	43	Natural Gas/Diesel	2005
Advanced Development						
Electroandes	Peru	35	100%	35	Hydro	2007
Total Projected Capacity		4,739		3,730		

Domestic Generation In Operation

TIE

Global had a 50% interest in TIE through its joint venture with TECO Energy Inc. (TECO). In June 2004, Global signed an agreement to acquire all of TECO's equity interest in TIE for less than $1 million. With this purchase, Global owns 100% of TIE and consolidated this investment effective July 1, 2004. TIE owns and operates two electric generation facilities, one in Guadalupe County in south central Texas (Guadalupe) and one in Odessa in western Texas (Odessa).

In 2003, TIE entered into an asset management agreement that provides greater access to the energy and gas marketplace. Approximately 55% and 57% of the total peak capacity for the Guadalupe and Odessa plants, respectively, for 2005 have been sold via bilateral PPAs. Any remaining uncommitted output is sold in the Texas spot market. Guadalupe and Odessa continue to enter into forward contracts on an ongoing basis.

Kalaeloa

Global's 50% partner in Kalaeloa is a power fund managed by Harbert Power Corporation (Harbert). All of the electricity generated by the Kalaeloa power plant is sold to the Hawaiian Electric Company, Inc. (HECO) under a PPA expiring in May 2016. Under a steam purchase and sale agreement expiring in May 2016, the Kalaeloa power plant supplies steam to the adjacent Tesoro refinery. The primary fuel, low sulfur fuel oil, is provided from the adjacent Tesoro refinery under a long-term all requirements contract. The refinery is interconnected to the power plant by a pipeline and preconditions the fuel oil prior to delivery. Back-up fuel supply is provided by HECO.

The two combustion turbines of Kalaeloa were upgraded in 2004 resulting in both an increase in the net plant output by approximately 20 MW and an improvement in the efficiency of consuming fuel. As a result of the upgrades, Kalaeloa and HECO entered into two amendments to the PPA. The amendments

will be effective upon final approval from the Public Utility Commission of the State of Hawaii. If approved, the amendments could increase Kalaeloa firm capacity and associated energy sales to HECO from 180 MW to 209 MW, or a lesser amount as actually demonstrated.

GWF and Hanford

Global and Harbert each own 50% of GWF. PPAs for the five GWF Bay Area plants' net output are in place with Pacific Gas and Electric Company (PG&E) ending in 2020 and 2021. GWF acquires the petroleum coke used to fuel its plants through contracts with two local oil refineries with price and minimum volumes being negotiated annually. Three of the five GWF plants have been modified to burn a wider variety of petroleum coke products to mitigate fuel supply and pricing risk.

Global and Harbert each own 50% of Hanford. A PPA for the plant's net output is in place with PG&E ending in August 2011. Hanford acquires its petroleum coke from a refinery whose previously scheduled October 2004 closing has been extended to March 2005 to enable the current owner to find a buyer for the refinery. The sale of the refinery is now expected to close in the first quarter of 2005 subject to all required

regulatory approvals. During 2004, Hanford tested the quality and firing characteristics of alternate sourced delayed petroleum coke and applied for permit modifications, which are under review, to be in position to transition to a new fuel supply, if necessary.

Hanford, Henrietta and Tracy Peaker Plants

GWF Energy, which is 60% owned by Global and 40% owned by Harbinger GWF LLC (Harbinger), an affiliate of Harbert, owns and operates three peaker plants in California. Global had owned approximately 75% of GWF Energy, but was required under an arbitration panel's finding to sell a 14.9% interest to Harbinger for approximately $14 million (approximate book value) in February 2004. The output of these plants is sold under a PPA with the California Department of Water Resources (DWR) with maturities in 2011 and 2012. DWR has the right to schedule energy and/or reserve capacity from each unit of the three plants for a maximum of 2,000 hours each year. Energy and capacity not scheduled by the DWR is available for sale by GWF Energy. GWF Energy obtains the natural gas used to fuel its plants from the spot market on a non-firm basis, with DWR taking the price and availability risk.

International Generation in Operation

India

PPN

Global owns a 20% interest in PPN located in Tamil Nadu, India. Global's partners include Marubeni Corporation, with a 26% interest, El Paso Energy Corporation, with a 26% interest, and the Apollo Infrastructure Company Ltd., with a 28% interest. PPN has entered into a PPA for the sale of 100% of its output to the State Electricity Board of Tamil Nadu (TNEB) for 30 years, with an agreement to take-or-pay equal to a plant load factor of at least 68.5%. TNEB has not made full payment to PPN for the purchase of energy under the contract. For a discussion of the TNEB's failure to meet its obligations under this PPA, see Item 3. Legal Proceedings.

Oman

Dhofar Power

In March 2001, Global, through Dhofar Power, signed a 20-year concession with the Government of Oman to privatize the electric system of the city of Salalah. A consortium led by Global (81% ownership) and several major Omani investment groups own Dhofar Power. Dhofar Power achieved commercial operation in May 2003. As required under the concession agreement, 35% of Dhofar Power's shares will be made available through a public offering on the Oman stock exchange in 2005. See Note 14. Commitments and Contingent Liabilities of the Notes for additional discussions regarding contractual disputes between Dhofar Power and the Government of Oman.

Peru

Electroandes

Electroandes' main assets include four hydroelectric facilities with a combined installed capacity of 183 MW and 437 miles of transmission lines located in the central Andean region east of Lima. In addition, Electroandes is in the process of developing a 35 MW expansion to an existing station. In

2004, 98% of Electroandes' revenues were obtained through various PPAs expiring between 2005 and 2008.

Venezuela

Turboven

The facilities in Cagua and Maracay are owned and operated by Turboven, an entity which is jointly-owned by Global and Corporacion Industrial de Energia (CIE). PPAs expiring between 2006 and 2011 have been entered into for the sale of approximately 40% of the output of Maracay and Cagua to various industrial customers. The PPAs are structured to provide energy only with minimum take provisions. Fuel

costs are passed through directly to customers and the energy tariffs are calculated in U.S. Dollars and paid in local currency.

TGM

Global has a 9% indirect interest in TGM through a partnership with CIE. TGM sells all of the energy produced under a PPA with Manufacturas del Papel (MANPA), a paper manufacturing concern located in Maracay. MANPA and CIE have common controlling shareholders.

Poland

ELCHO

Global has 90% ownership in ELCHO, a company that has developed a combined thermal energy and power generation plant located in the city of Chorzow, Poland that began operation in the fourth quarter of 2003. ELCHO also owns an older, smaller combined heat and power plant that was retired in 2004. ELCHO has a 20-year PPA with Polskie Sieci Elektroenergetyczne SA (PSE), the Polish government power grid company. In addition to the PPA, ELCHO has contracts with local distribution companies to provide hot water. Approximately 80% of ELCHO's revenues are derived from the PPA and 20% from the thermal business. A portion of the PPA is indexed to U.S. Dollars to support the portion of ELCHO's non-recourse project financing that is in U.S. Dollars. The remainder of the PPA is in Polish Zlotys. For additional information related to ELCHO, see Item 3. Legal Proceedings.

Skawina

During 2002, Global acquired a 50% interest in Skawina, a combined thermal energy and power generation plant in Poland. In accordance with the purchase agreement, Global purchased additional shares from Skawina's employees to increase its equity interest in Skawina to approximately 63% in August 2003 and 75% in September 2004. Skawina supplies electricity to several electric distribution companies and heat mainly to the city of Krakow under one-year contracts consistent with current practice in Poland.

Electric Distribution Facilities

Global has invested in the following major distribution facilities:

Name	Location	Number of Customers	Global's Ownership Interest
RGE	Brazil	1,070,000	32%
Chilquinta	Chile	509,000	50%
SAESA Group	Chile	571,000	100%
LDS	Peru	750,000	38%
Total		2,900,000	

As part of Dhofar Power's concession, Global also operates a small distribution facility serving approximately 40,000 customers.

Brazil

RGE

Global owns a 32% equity interest in RGE. Global is the named operator for the system. A shareholders' agreement establishes corporate governance, voting rights and key financial provisions. Global has veto rights over certain actions, including approval of the annual budget and financing plan, appointment of executive officers, significant investments or acquisitions, sale or encumbrance of assets, establishment of guarantees, amendment of the by-laws of the company and dividend policies. Day-to-day operations are the responsibility of RGE's management, subject to shareholder oversight. During 2001, VBC Energia and Previ transferred their shares to Companhia Paulista de Forcae Luz (CPFL), an electric distribution company in which VBC Energia and Previ collectively own a majority interest.

RGE operates under a territorial concession agreement ending in 2027. Under a new regulation passed in 2004, the concession is exclusive and only large consumers have the right to choose another provider of energy or to self-generate. Global does not believe this represents a material threat to the profitability of the distribution system in Brazil since the tariff structure provides the distribution system the opportunity to recover all costs associated with distribution service plus a return. In 2002, RGE secured its energy supply through a 12-year contract signed with Tractebel, a European generation company, which covers all its actual capacity not covered by other existing contracts. Of RGE's existing contracts, only one is denominated in U.S. Dollars. This contract represents 20% of RGE's current needs.

For additional information related to RGE, see Item 1. Business—Regulatory Issues and Item 3. Legal Proceedings.

Chile and Peru

Chilquinta and LDS

Global together with its partner, Sempra Energy (Sempra), own 99.99% of the shares of Chilquinta, an energy distribution company with numerous energy holdings, based in Valparaiso, Chile. Global's interest is 50% of this aggregate. Following the sale in 2004 of 12% of shares of LDS to the public, Global and Sempra own 75.9% of LDS, an electric distribution company located in Lima, Peru. As part of the Chilquinta and LDS investments, Global and Sempra also own Tecnored and Tecsur, located in Chile and Peru, respectively. These companies provide procurement and contracting services to Chilquinta, LDS and others.

As equal partners, Global and Sempra share in the management of Chilquinta and LDS. However, Sempra has assumed lead operational responsibilities at Chilquinta, while Global has assumed lead operational responsibilities at LDS. The shareholders' agreement provides for important veto rights over major partnership decisions including dividend policy, budget approvals, management appointments and indebtedness.

Chilquinta operates under a non-exclusive perpetual franchise within Chile's Region V which is located just north and west of Santiago. Global believes that direct competition for distribution customers would be uneconomical for potential competitors. LDS operates under an exclusive, perpetual franchise in the southern portion of the city of Lima and in an area just south of the city along the coast serving a population of approximately 3.2 million. Both Chilquinta and LDS purchase energy for distribution from generators in their respective markets on a contract basis. For additional information related to Chilquinta and LDS, see Item 1. Business—Regulatory Issues.

SAESA Group

Global owns a 99.98% equity interest in SAESA, 98.36% of Empresa Electrica de la Frontera S.A. (Frontel) and 100% of PSEG Generacion y Energia Chile Limitada (Generacion), collectively known together with subsidiaries of SAESA as the SAESA Group. The SAESA Group consists of four distribution companies and one transmission company that provide electric service to 390 cities and towns over 900 miles in southern Chile and a generating company. The SAESA Group has 72 MW of installed generating capacity in operation (52 MW oil-fired, 18 MW hydro and 2 MW wind) and an additional 43 MW of natural gas-fired peaker capacity under construction. The transmission company, Sistema de Transmision del Sur S.A. (STS), provides transmission services to electric generation facilities that have PPAs with distributors in Regions VIII, IX and X and has installed transformation

capacity of 816 megavolt-amperes.

SAESA also owns a 50% interest in an Argentine distribution company, Empresa de Energia Rio Negro S.A. (EDERSA), which provides generation, transmission and distribution services to approximately 147,000 customers in the Province of Rio Negro.

The Chilean members of the SAESA Group are organized and administered according to a centralized administrative structure designed to maximize operational synergies. In Argentina, EDERSA has its own independent administrative structure. For additional information related to the SAESA Group, see Item 1. Business—Regulatory Issues.

ITEM 3. LEGAL PROCEEDINGS

PSE&G

On November 15, 2001, Consolidated Edison Company of New York, Inc. (Con Edison) filed a complaint against PSE&G with the FERC asserting that PSE&G had breached agreements covering 1,000 MW of transmission. PSE&G denied the allegations set forth in the complaint. An Initial Decision issued by an ALJ in April 2002 upheld PSE&G's claim that the contracts do not require the provision of "firm" transmission service to Con Edison but also accepted Con Edison's contentions that PSE&G was obligated to provide service to Con Edison utilizing all the facilities comprising its electrical system including generation facilities and that PSE&G was financially responsible for "out-of-merit," i.e., above-market, generation costs needed to effectuate the desired power flows. On December 9, 2002, FERC issued an order modifying the Initial Decision by finding that only 600 MW of the total 1,000 MW power transfers is required to be supported by out-of-merit generation. FERC also made a number of other findings, on a preliminary basis, including favorable findings to PSE&G that power transfers should be measured on a "net" basis that considers the impacts of third-party transactions and that PSE&G's obligations should be reduced to the extent that Con Edison has impaired PSE&G's ability to perform under the contracts. FERC remanded a number of issues to the ALJ for additional hearings, mainly related to the development of protocols to implement the findings of the December 9, 2002 order. In addition, issues related to Phase II of the complaint involving the past administration of the contracts and a claim that PSE&G improperly benefited from the purchase of hedging contracts in New York, were also referred to the ALJ. The ALJ issued an Initial Decision on the Phase II issues on June 11, 2003 and on August 2, 2004 FERC issued its decision on Phase II issues. Those decisions were largely favorable to PSE&G; however, PSE&G did seek rehearing as to certain issues as did Con Edison. Those rehearing applications are currently pending. The August 2, 2004 order required that PJM, NYISO, Con Edison and PSE&G meet for the purpose of developing operational protocols to implement FERC's directives. Several meetings have occurred, including meetings before the ALJ, in an attempt to agree upon protocols. On February 18, 2005, NYISO, PJM and PSE&G submitted a joint compliance filing pursuant to the FERC's August 2, 2004 decision. Comments on the filing are due March 11, 2005.

Power

Hudson and Mercer Generation Stations

During 1997 and 1998, approximately 150,000 tons of fly ash generated by the Hudson and Mercer generating stations was taken by an ash marketer, with whom Power then worked, and sold to the owner and operator of a clay mine. The operator of the clay mine used the fly ash as fill material to return the mine site to grade, without obtaining the necessary approvals from the NJDEP. Upon discovery of this use, Power terminated the services of this ash marketer and initiated discussions with the NJDEP for the appropriate regulatory approvals to allow this material to remain at the site. The NJDEP has approved a closure plan for the site that features a clay cap and other engineering controls to ensure that the ash is isolated from the environment. The cost of resolving this matter will depend upon the results of negotiations with the property owner and the ash marketer. Although the precise extent of liability is not currently estimable, it is not expected to be material.

Kearny Generation Station

A preliminary review of possible mercury contamination at the Kearny station concluded that additional studies and investigations are required. A Remedial Investigation (RI) was conducted and a

report was submitted to the NJDEP in 1997. This report is currently under technical review. The RI report found that the mercury at the site is stable and immobile and should be addressed at the time the Kearny station is retired.

Energy Holdings

Texas

The Public Utility Commission of Texas (PUCT) instituted an investigation regarding certain price spikes in the Electric Reliability Council of Texas (ERCOT) Balancing Energy Service (BES) market and ancillary services market that occurred during extreme weather conditions on February 24-26, 2003, to determine whether any market manipulation occurred and whether any existing protocols need to be revised. On those days, during several trading periods, prices in the ERCOT balancing energy market cleared near the $1,000 per MWh ERCOT price cap. As part of the PUCT investigation, TIE and its two operating subsidiaries, Guadalupe and Odessa, along with the other market participants, were requested to provide certain information to the PUCT relating to their bids during this period. TIE, Guadalupe and Odessa supplied all the requested information and believe such information demonstrates that Guadalupe's and Odessa's bidding activities were consistent with ERCOT protocols.

The PUCT issued an order in May 2003 directing ERCOT to implement certain changes to the BES market to mitigate the affects of potential future price spikes. These changes have been implemented. Global believes that the new protocols will have minimal financial impact on Guadalupe and Odessa.

On July 7, 2003, Texas Commercial Energy LLC (TCE) filed suit against the three major electric utilities in Texas, certain wholesale power generators, their related affiliated retail electric providers and certain qualified scheduling entities, as well as ERCOT, in its function as the ISO for the Texas energy market. The action filed in the U.S. District Court for the Southern District of Texas, Civil Action No. C-03-249, alleges price-fixing, predatory pricing and certain common law claims. Automated Power Exchange, Inc. (APX), a named defendant, acted as agent and submitted bids on behalf of Guadalupe and Odessa, as well as several other generators in the ERCOT balancing energy market. APX has submitted a demand for indemnification from Guadalupe and Odessa. On February 3, 2004, TCE amended its complaint and named TIE, Guadalupe and Odessa and others as additional defendants. On May 20, 2004, the U.S. District Court granted the defendants' motion to dismiss the state and federal antitrust claims. All collateral claims were to be held in abatement pending an appeal of the ruling to the Fifth Circuit Court of Appeals. On July 19, 2004, TCE filed a Notice of Appeal, and the parties subsequently filed briefs and reply briefs. Global continues to believe there are valid defenses to TCE's claims which will be vigorously asserted.

On February 18, 2005, Utility Choice L.P., and Cirro Group Inc. filed suit against many of the same defendants in the TCE suit, including TIE based on facts similar to those alleged in the TCE litigation. The new action, filed in the U.S. District Court for the Southern Division of Texas also alleges price-fixing, predatory pricing and various other claims. Global believes there are valid defenses to these claims which will be vigorously asserted.

Poland

ELCHO

Global has an approximate 90% ownership interest in ELCHO, which owns a combined power generation and thermal energy plant in Poland. ELCHO has a contract with a local distribution company for the delivery of heat to Chorzow and three other towns, which represents approximately 20% of ELCHO's business. The local heat distribution company is under bankruptcy protection as of June 30, 2004. The bankruptcy of this customer caused a default under ELCHO's bank agreements, which are non-recourse to Global and Energy Holdings. A waiver has been obtained from ELCHO's lenders which

Global will seek to extend, as appropriate. ELCHO's net receivable from the local distribution company is approximately $7 million. Payments are currently being made and the receivable has not increased. Although Global believes that the receivable will be recoverable and that there will not be a material adverse impact on its financial position, results of operations or cash flows as a result of this matter, no assurances can be given.

In a separate matter, ELCHO has a 20-year PPA with the Polish government's power grid company. The Polish government has embarked on a process with the intention of terminating all of the more than 30 long-term PPAs it has with energy suppliers. The Polish government has expressed its intention to compensate each entity whose contract is terminated with monies raised by the government by securitizing a charge that will be passed on to ratepayers. In 2003, the Polish government informally proposed compensation that Global did not believe to be adequate. Global has been holding discussions with the Polish government with the objective of ensuring that any settlement is financially neutral to ELCHO. There have been recent fundamental changes to the proposed policy to terminate long-term contracts. Such changes may include making it optional for PPA owners to participate in the termination scheme. The risks and benefits to opting in or out of such a program cannot be fully analyzed with information available at this time. Inadequate compensation could lead to lower future revenues and earnings and could have a material adverse impact on Global's financial position, results of operations or cash flows.

India

Global has a 20% ownership interest in PPN, which sells its output under a long-term PPA with the TNEB. TNEB has not made full payment to PPN for the purchase of energy under the PPA and the total receivable as of December 31, 2004 was approximately $110 million. The project ran on a limited basis during the fourth quarter of 2004, primarily due to the high cost of naphtha fuel and resulting low ranking on the merit order dispatch list. The past due receivable as of December 31, 2004 was approximately $27 million, net of a $66 million reserve. If TNEB continues to fail to make required payments under the PPA, PPN may have liquidity problems. On March 26, 2004, Global and one of its partners in PPN, El Paso Energy Corporation, filed a notice of arbitration on behalf of PPN against TNEB under the arbitration clause of the PPA, asserting that they have the right as minority shareholders to protect the contractual rights of PPN where PPN has failed to exercise those rights itself. In response, PPN filed a petition for an anti-suit injunction against the arbitration. Global successfully defended against the petition in two lower courts. PPN has filed its final appeal in the Supreme Court of India (SLP Civil No. 23169). Hearings began on January 24, 2005.

Global expects that a final determination will be made by the Central Electricity Authority and TNEB in 2005 regarding the capital cost of the project that may affect the tariff that PPN charges TNEB. An adverse outcome to the continuing negotiations or arbitration with TNEB could potentially result in an impairment of this investment, which could be material to PSEG's and Energy Holdings' respective results of operations. As of December 31, 2004, Global's total investment in PPN was approximately $38 million.

RGE

ANEEL—RGE Merger Matter

On June 29, 1998, RGE's parent, DOC3 Participacoes, S.A. (DOC3), was merged into RGE. In connection with the merger, the shareholders of DOC3 became direct shareholders in RGE (Downstream Merger). Upon the merger, RGE assumed all of DOC3's liabilities including loans payable to existing shareholders and issued preferred shares which bore a fixed interest rate of 13% per annum. The Brazilian electricity sector regulator, ANEEL, took the position that the Downstream Merger of DOC3 into RGE was inappropriate because it was a related-party transaction and was not expressly approved by ANEEL. Although RGE believed that ANEEL's prior approval of the transaction was not required because it did not involve a change in the control of RGE, it entered into negotiations with ANEEL in order to resolve the dispute. During the fourth quarter of 2004, RGE and ANEEL settled the dispute. ANEEL approved the Downstream Merger of DOC3 into RGE and fined RGE $3 million (Resolution 166, dated July 13, 2004 under Docket No. 48500.003518/03-52). In addition, RGE's shareholders agreed to modify the preferred shares by eliminating the 13% fixed interest rate per annum and capitalizing all accrued and unpaid dividends through the date of the settlement. RGE's preferred shares will only be paid dividends in the future on the same basis as RGE's common shares without a preferential fixed rate of return. Global believes that this outcome is satisfactory because it ends a long lasting dispute and will normalize the relation with ANEEL.

PSEG, PSE&G, Power and Energy Holdings

In addition to matters discussed above, see information on the following proceedings at the pages indicated for PSEG and each of PSE&G, Power and Energy Holdings as noted:

(1) Page 16. (Power) PJM Interconnection L.L.C. filing with FERC on November 2, 2004, Docket No. EL03-236-003 to amend Tariff and Operating Agreement to request Reliability Must-Run (RMR) compensation.
(2) Page 16. (Power) PSEG Power Connecticut's filing with FERC on November 17, 2004, Docket No. ER05-231-000, to request RMR compensation.
(3) Page 17. (Power) PSEG Lawrenceburg Energy Company and PSEG Waterford Energy respective filings of triennial market power reviews, Docket Nos. ER01-2460-002 and ER01-2482-002, August 2004.
(4) Page 17. (PSE&G) FERC proceeding related to MISO and PJM. Joint Filing of New PJM Companies and PJM Interconnection, L.L.C. to expand PJM, The New PJM Companies, et al., Docket No. ER03-262-000, December 11, 2002.
(5) Page 17. (PSEG, PSE&G, Power and Energy Holdings) FERC proceeding related to PJM Restructuring, FERC Order dated June 26, 2003 seeking comments on proposed revisions to market-based rate tariffs and authorizations, Investigation of Terms and Conditions of Public Utility Market-Based Rate Authorizations, 103 FERC § 61,349.

(6) Page 18. (PSE&G) Neptune Regional Transmission System, LLC v. PJM Interconnection, L.L.C. complaint filed with FERC on December 21, 2004, Docket No. EL05-48-000, alleging PJM impermissibly conducted an interconnection re-study triggered by generator retirements in PJM, which had the effect of increasing Neptune's cost exposure for network upgrades from approximately $4 million to $26 million.

(7) Page 19. (PSE&G) JCP&L v. ACE, et al. complaint filed with FERC on December 30, 2004, Docket No. EL05-50-000, seeking to terminate its construction obligations under the LDV Agreement.

(8) Page 21. (PSE&G) PSE&G's BGSS Commodity filing with the BPU on May 28, 2004, Docket No. GR04050390.

(9) Page 21. (PSE&G) Remediation Adjustment Clause filing with the BPU filed in June 2003, Docket No. GR03060436.

(10) Page 21. (PSE&G) Remediation Adjustment Clause filing with the BPU on April 22, 2004, Docket No. GR04040291.

(11) Page 21. (PSE&G) PSE&G's BGSS Commodity filing with the BPU on May 30, 2003, Docket No. EO03050394.

(12) Page 22. (PSE&G) Cost Recovery filing with the BPU on July 1, 2004, Docket No. EE04070718.

(13) Page 22. (PSE&G) Deferral Proceeding filed with the BPU on August 28, 2002, Docket No. EX02060363, and Deferral Audit beginning on October 2, 2002 at the BPU, Docket No. EA02060366.

(14) Page 22. (PSE&G) BPU's audit of gas supply costs.

(15) Page 22. (PSE&G) BPU Order dated December 23, 2003, Docket No. EO02120955 relating to the New Jersey Interim Clean Energy Program.

(16) Page 26. (Power) Power's Petition for Review filed in the United States Court of Appeals for the District of Columbia Circuit on July 30, 2004 challenging the final rule of the United States Environmental Protection Agency entitled "National Pollutant Discharge Elimination System—Final Regulations to Establish Requirements for Cooling Water Intake Structures at Phase II Existing Facilities," now transferred to and venued in the United States Court of Appeals for the Second Circuit with Docket No. 04-6696-ag.

(17) Page 150. (PSE&G) Investigation Directive of NJDEP dated September 19, 2003 and additional investigation Notice dated September 15, 2003 by the EPA regarding the Passaic River site. Docket No. EX93060255.

(18) Page 151. (PSE&G) PSE&G's MGP Remediation Program instituted by NJDEP's Coal Gasification Facility Sites letter dated March 25, 1988.

(19) Page 155. (Power) Filing of Complaint by Nuclear against the DOE on September 26, 2001 in the U.S. Court of Federal Claims, Docket No. 01-551C seeking damages caused by the DOE's failure to take possession of spent nuclear fuel. The complaint was amended to include PSE&G as a prior owner in interest.

(20) Page 157. (Energy Holdings) Peru's Internal Revenue Agency's (SUNAT) claim for past due taxes at LDS, Resolution No. 0150150000030, dated July 10, 2003.

(21) Page 158. (Holdings) Dhofar Power Company SAOC v. Ministry of Housing, Electricity and Water (Sultanate of Oman), ICC Reference EXP/233.

PSE&G and Power

In addition, see the following environmental related matters involving governmental authorities. Based on current information, PSE&G and Power do not expect expenditures for any such site, individually or for all such current sites in the aggregate, to have a material effect on their respective financial condition, results of operations and net cash flows.

(1) Claim made in 1985 by the U.S. Department of the Interior under CERCLA with respect to the Pennsylvania Avenue and Fountain Avenue municipal landfills in Brooklyn, New York, for damages to natural resources. The U.S. Government alleges damages of approximately $200 million. To PSE&G's knowledge there has been no action on this matter since 1988.

(2) Duane Marine Salvage Corporation Superfund Site is in Perth Amboy, Middlesex County, New Jersey. The EPA had named PSE&G as one of several potentially responsible parties (PRPs) through a series of administrative orders between December 1984 and March 1985. Following work performed by the PRPs, the EPA declared on May 20, 1987 that all of its administrative orders had been satisfied. The NJDEP,

however, named PSE&G as a PRP and issued its own directive dated October 21, 1987. Remediation is currently ongoing.

(3) Various Spill Act directives were issued by NJDEP to PRPs, including PSE&G with respect to the PJP Landfill in Jersey City, Hudson County, New Jersey, ordering payment of costs associated with operation and maintenance, interim remedial measures and a Remedial Investigation and Feasibility Study (RI/FS) in excess of $25 million. The directives also sought reimbursement of NJDEP's past and future oversight costs and the costs of any future remedial action.

(4) Claim by the EPA, Region III, under CERCLA with respect to a Cottman Avenue Superfund Site, a former non-ferrous scrap reclamation facility located in Philadelphia, Pennsylvania, owned and formerly operated by Metal Bank of America, Inc. PSE&G, other utilities and other companies are alleged to be liable for contamination at the site and PSE&G has been named as a PRP. A Final Remedial Design Report was submitted to the EPA in September of 2002. This document presents the design details that will implement the EPA's selected remediation remedy. The costs of remedy implementation are estimated to range from $14 million to $24 million. PSE&G's share of the remedy implementation costs are estimated between $4 million and $8 million. The remedy itself and responsibility for the costs of its implementation are the subject of litigation currently in the U.S. District Court for the Eastern District of Pennsylvania entitled United States of America, et. al., v. Union Corporation, et. al., Civil Action No. 80-1589.

(5) The Klockner Road site is located in Hamilton Township, Mercer County, New Jersey, and occupies approximately two acres on PSE&G's Trenton Switching Station property. PSE&G entered into a memorandum of agreement with the NJDEP for the Klockner Road site pursuant to which PSE&G conducted an RI/FS and remedial action at the site to address the presence of soil and groundwater contamination at the site.

(6) The NJDEP assumed control of a former petroleum products blending and mixing operation and waste oil recycling facility in Elizabeth, Union County, New Jersey (Borne Chemical Co. site) and issued various directives to a number of entities including PSE&G requiring performance of various remedial actions. PSE&G's nexus to the site is based upon the shipment of certain waste oils to the site for recycling. PSE&G and certain of the other entities named in NJDEP directives are members of a PRP group that have been working together to satisfy NJDEP requirements including: funding of the site security program; containerized waste removal; and a site remedial investigation program.

(7) The New York State Department of Environmental Conservation (NYSDEC) has named PSE&G as one of many PRPs for contamination existing at the former Quanta Resources Site in Long Island City, New York. Waste oil storage, processing, management and disposal activities were conducted at the site from approximately 1960 to 1981. It is believed that waste oil from PSE&G's facilities was taken to the Quanta Resources Site. NYSDEC has requested that the PRPs reimburse the state for the costs NYSDEC has expended at the site and to conduct an investigation and remediation of the site. Power, PSE&G and the other PRPs have executed an Order on Consent with NYSDEC for the investigation of the site and have entered an agreement among some of the PRPs for the sharing of the associated costs. The holders of a note securing a mortgage on property adjacent to the Quanta Resources Site have filed an action against some of the PRPs seeking to recover damages allegedly incurred as a result of contamination migrating from the Quanta Resources Site onto the adjacent parcels and to compel the cleanup of those parcels.

ITEM 4. SUBMISSION OF MATTERS TO A VOTE OF SECURITY HOLDERS

PSEG—None.

PSE&G—None.

Power—None.

Energy Holdings—None.

920980651

ITEM 6. SELECTED FINANCIAL DATA

PSEG

The information presented below should be read in conjunction with the Management's Discussion and Analysis of Financial Condition and Results of Operations (MD&A) and the Consolidated Financial Statements and Notes to Consolidated Financial Statements (Notes).

	For the Years Ended December 31,				
	2004	2003	2002	2001	2000
	(Millions, where applicable)				
Operating Revenues	$10,996	$11,139	$ 8,220	$ 6,883	$ 6,521
Income from Continuing Operations	$ 721	$ 852	$ 405(A)	$ 766	$ 782
Net Income	$ 726	$ 1,160	$ 235	$ 764	$ 770
Earnings per Share:					
Income from Continuing Operations:					
Basic	$ 3.04	$ 3.73	$ 1.94(A)	$ 3.68	$ 3.64
Diluted	$ 3.03	$ 3.72	$ 1.94(A)	$ 3.68	$ 3.64
Net Income:					
Basic	$ 3.06	$ 5.08	$ 1.13	$ 3.67	$ 3.58
Diluted	$ 3.05	$ 5.07	$ 1.13	$ 3.67	$ 3.58
Dividends Declared per Share	$ 2.20	$ 2.16	$ 2.16	$ 2.16	$ 2.16
As of December 31:					
Total Assets	$29,207	$28,084	$26,147	$25,568	$21,531
Long-Term Obligations(B)	$12,975	$12,995	$12,291	$10,814	$ 5,869
Preferred Stock With Mandatory Redemption	$ —	$ —	$ —	$ —	$ 75

(A) 2002 results include after-tax charges of $368 million, or $1.76 per share, related to losses from Energy Holdings' Argentine investments. See Item 7. MD&A—Results of Operations and Note 6. Asset Impairments of the Notes for further discussion.

(B) Includes capital lease obligations. The increase in 2001 is related to a $2.5 billion securitization transaction. In addition, this includes debt supporting trust preferred securities in all years presented due to the implementation of Financial Accounting Standards Board (FASB) Interpretation No. 46 (FIN 46), "Consolidation of Variable Interest Entities (VIE)." See Note 2. Recent Accounting Standards of the Notes.

PSE&G

The information presented below should be read in conjunction with the MD&A, the Consolidated Financial Statements and the Notes.

	For the Years Ended December 31,				
	2004	2003	2002	2001	2000

			(Millions)		
Operating Revenues	$ 6,972	$ 6,740	$ 5,919	$ 6,091	$ 5,887
Income Before Extraordinary Item	$ 346	$ 247	$ 205	$ 235	$ 587
Net Income	$ 346	$ 229	$ 205	$ 235	$ 587
As of December 31:					
Total Assets	$13,586	$13,177	$12,867	$13,299	$15,626
Long-Term Obligations(A)	$ 4,877	$ 5,129	$ 5,050	$ 5,180	$ 4,163
Preferred Stock With Mandatory Redemption	$ —	$ —	$ —	$ —	$ 75

(A) Includes capital lease obligations. The increase in 2001 is related to a $2.5 billion securitization transaction. In addition, this includes debt supporting trust preferred securities in all years presented due to the implementation of FIN 46. For additional information, see Note 2. Recent Accounting Standards of the Notes.

Power

Omitted pursuant to conditions set forth in General Instruction I of Form 10-K.

Energy Holdings

Omitted pursuant to conditions set forth in General Instruction I of Form 10-K.

ITEM 7. MANAGEMENT'S DISCUSSION AND ANALYSIS OF FINANCIAL CONDITION AND RESULTS OF OPERATIONS (MD&A)

This combined MD&A is separately filed by Public Service Enterprise Group Incorporated (PSEG), Public Service Electric and Gas Company (PSE&G), PSEG Power LLC (Power) and PSEG Energy Holdings LLC (Energy Holdings). Information contained herein relating to any individual company is filed by such company on its own behalf. PSE&G, Power and Energy Holdings each make representations only as to itself and make no other representations whatsoever as to any other company.

OVERVIEW OF 2004 AND FUTURE OUTLOOK

PSEG, PSE&G, Power and Energy Holdings

Merger Agreement

On December 20, 2004, PSEG entered into an agreement and plan of merger (Merger Agreement) with Exelon Corporation (Exelon), a public utility holding company registered under the Public Utility Holding Company Act of 1935 (PUHCA) which is headquartered in Chicago, Illinois, whereby PSEG will be merged with and into Exelon (Merger). Under the Merger Agreement, each share of PSEG Common Stock will be converted into 1.225 shares of Exelon Common Stock.

PSEG and Exelon entered into the Merger Agreement with the expectation that the Merger would result in various benefits, including, among other things, cost savings and operating efficiencies. The Merger Agreement also addresses the key issues of leadership succession at PSEG with John Rowe, Exelon's Chief Executive Officer to become Chief Executive Officer of the combined company. Achieving the anticipated benefits of the Merger is subject to a number of uncertainties, including whether the businesses of Exelon and PSEG are integrated in an efficient and effective manner, as well as general competitive factors in the market place. Failure to achieve these anticipated benefits could result in increased costs, decreases in the amount of expected revenues generated by the combined company and diversion of management's time and energy and could have an adverse effect on the combined company's business, financial condition, operating results and prospects.

The Merger Agreement has been unanimously approved by both companies' boards of directors. Before the Merger may be completed, various approvals or consents must be obtained from shareholders, the Federal Energy Regulatory Commission (FERC), the Securities and Exchange Commission (SEC), the Nuclear Regulatory Commission (NRC) and various utility regulatory, antitrust and other authorities in the United States (U.S.) and in foreign jurisdictions. The governmental authorities from which these approvals are required may impose conditions on completion of the merger or require changes to the terms of the Merger. These conditions or changes could have the effect of delaying completion of the Merger or imposing additional costs on or limiting the revenues of the combined company and/or the individual registrants following the Merger, any of which might have a material adverse effect on the combined company or the individual registrants following completion of

the Merger. PSEG is committed to this proposed business combination, however, pending receipt of the various required approvals, which cannot be assured, PSEG intends to remain positioned with a viable stand-alone strategy.

On February 4, 2005, PSEG and Exelon filed for approval of the Merger with the FERC, the New Jersey Board of Public Utilities (BPU) and the Pennsylvania Public Utility Commission (PPUC). Exelon also filed a notice of the Merger with the Illinois Commerce Commission.

Although PSEG and Exelon intend to take steps to reduce any adverse effects, uncertainties relating to the Merger may impair PSEG's and Exelon's ability to attract, retain and motivate key personnel until the Merger is consummated and for a period of time thereafter due to uncertainty about roles with the future combined company, and could cause customers, suppliers and others that deal with PSEG and Exelon to seek to change existing business relationships. Inability to retain key employees or maintain satisfactory

relationships with employees, customers or suppliers could have a material adverse impact on the operations of PSEG, Exelon and the combined company following the Merger.

It is anticipated that the regulatory approval process will be completed and the Merger will close within 12 months to 15 months after the announcement of the Merger Agreement in December 2004, subject to shareholder and regulatory approvals which cannot be assured. The Merger would create a combined company serving approximately seven million electric customers and approximately two million gas customers in Illinois, New Jersey and Pennsylvania.

PSEG and Exelon expect to incur costs associated with consummating the Merger and integrating the operations of the two companies, as well as approximately $29 million and $41 million in transaction fees for PSEG and Exelon, respectively. Preliminary estimated integration costs associated with the Merger are approximately $700 million over a period of 4 years, with approximately $400 million being incurred in the first year after completion of the Merger and approximately $150 million being incurred in the second year after completion of the Merger.

Following the Merger, approximately 50% of the combined company's earnings and cash flow is expected to be produced by the three regulated utilities, PSE&G, Commonwealth Edison Company in northern Illinois and PECO Energy Company in southeastern Pennsylvania, and 50% by the unregulated businesses, primarily from the combined generation of Power and Exelon Generation Company LLC (Exelon Generation). After the Merger, the combined company expects to maintain its proportion of business in regulated operations while reducing the proportion in international operations. The expected strategy of the combined company would be to divest, in an orderly fashion, PSEG Global LLC's (Global) investments that do not meet the strategic objectives of the combined company.

The Merger Agreement contains certain termination rights for both Exelon and PSEG, and further provides that, upon termination of the Merger Agreement under specified circumstances, (1) Exelon may be required to pay PSEG a termination fee of $400 million plus PSEG's transaction expenses up to $40 million and (2) PSEG may be required to pay Exelon a termination fee of $400 million plus Exelon's transaction expenses up to $40 million.

Among the factors considered by the board of directors of PSEG in connection with its approvals of the Merger Agreement were the benefits as well as the risks that could result from the Merger. PSEG cannot give any assurance that these benefits will be realized within the time periods contemplated or even that they will be realized at all.

Concurrent with the Merger Agreement, PSEG Nuclear LLC (Nuclear) entered into an Operating Services Contract (OSC) with Exelon Generation, which commenced on January 17, 2005, relating to the operation of the Salem and Hope Creek nuclear generating stations. The OSC provides that Exelon Generation will provide a chief nuclear officer and other key personnel to oversee daily plant operations at the Hope Creek and Salem nuclear generating stations and to implement the Exelon operating model, which defines practices that Exelon has used to manage its own nuclear performance program. Nuclear will continue as the license holder with exclusive legal authority to operate and maintain the plants, will retain responsibility for management oversight and will have full authority with respect to the marketing of its share of the output from the facilities. Exelon Generation will be entitled to receive reimbursement of its costs in discharging its obligations, an annual operating services fee and incentive fees of up to $12 million annually based on attainment of goals relating to safety, capacity factors of the plants and operation and maintenance expenses. The OSC has a term of two years, subject to earlier termination in certain events upon prior notice, including any termination of the Merger Agreement. In the event of termination, Exelon Generation will continue to provide services under the OSC for a transition period of at least 180 days and up to two years at the election of Nuclear. This period may be further extended

by Nuclear for up to an additional 12 months if Nuclear determines that additional time is necessary to complete required activities during the transition period.

Prior to the Merger, PSEG and Exelon, and their respective subsidiaries, will continue to operate as separate entities. The discussion contained in the combined MD&A that follows relates solely to the current businesses of PSEG, PSE&G, Power and Energy Holdings and their respective expectations for future financial position, results of operations and cash flows, exclusive of any potential impacts from the Merger.

RESULTS OF OPERATIONS

PSEG, PSE&G, Power and Energy Holdings

Net Income for the year ended December 31, 2004 was $726 million or $3.05 per share of common stock, diluted, based on approximately 238 million average shares outstanding. Net Income for the year ended December 31, 2003 was approximately $1.2 billion or $5.07 per share of common stock, diluted, based on approximately 229 million average shares outstanding. Included in 2003's Net Income was a $370 million after-tax Cumulative Effect of a Change in Accounting Principle related to the adoption in 2003 of Statement of Financial Accounting Standards (SFAS) No. 143, "Accounting for Asset Retirement Obligations" (SFAS 143). See Note 3. Asset Retirement Obligations of the Notes. For the year ended December 31, 2002, Net Income was $235 million or $1.13 per share of common stock, diluted, including certain after-tax charges of $538 million or $2.57 per share. The charges related to the abandoned Argentine investments and losses from operations of those assets, discontinued operations of PSEG Energy Technologies Inc. (Energy Technologies) and Tanir Bavi Power Company Private Ltd. (Tanir Bavi), a generating facility in India, and goodwill impairment charges.

	Earnings (Losses)		
	Years Ended December 31,		
	2004	2003	2002
		(Millions)	
PSE&G	$346	$ 247	$ 205
Power	308	474	468
Energy Holdings:			
Global(A)	78	121	(297)
Resources	68	72	84
Other(B)	(10)	(4)	(7)
Total Energy Holdings(A)	136	189	(220)
Other(C)(D)	(69)	(58)	(48)
PSEG Income from Continuing Operations	721	852	405
Income (Loss) from Discontinued Operations, including Gain (Loss) on Disposal(E)	5	(44)	(49)
Extraordinary Item(F)	—	(18)	—
Cumulative Effect of a Change in Accounting Principle(G)	—	370	(121)
PSEG Net Income(A)	$726	$1,160	$ 235

	Contribution to Earnings Per Share (Diluted)		
	Years Ended December 31,		
	2004	2003	2002
PSE&G	$ 1.45	$ 1.08	$ 0.98
Power	1.29	2.07	2.24
Energy Holdings:			

Global(A)	0.35	0.53	(1.42)
Resources	0.29	0.31	0.40
Other(B)	(0.04)	(0.02)	(0.04)
Total Energy Holdings(A)	0.60	0.82	(1.06)
Other(C)(D)	(0.31)	(0.25)	(0.22)
PSEG Income from Continuing Operations	3.03	3.72	1.94
Income (Loss) from Discontinued Operations, including Gain (Loss) on Disposal(E)	0.02	(0.19)	(0.23)
Extraordinary Item(F)	—	(0.08)	—
Cumulative Effect of a Change in Accounting Principle(G)	—	1.62	(0.58)
PSEG Net Income(A)	$ 3.05	$ 5.07	$ 1.13

(footnotes on next page)

(footnotes from previous page)

(A) Includes after-tax write-down and losses related to Argentine investments of $368 million or $1.76 per share for the year ended December 31, 2002.

(B) Other activities include amounts of Energy Holdings (parent company), Energy Technologies, Enterprise Group Development Corporation (EGDC) and intercompany eliminations. Specific amounts include interest on certain financing transactions and certain other administrative and general expenses at Energy Holdings.

(C) Includes pre-tax costs related to the Merger of approximately $8 million for the year ended December 31, 2004, including investment banking fees, accounting and legal fees, consulting fees for market analyses and communications costs.

(D) Other activities include amounts of PSEG (parent company) and intercompany eliminations. Specific amounts include preferred securities dividends requirements for PSE&G and Energy Holdings, interest on certain financing transactions and certain other administrative and general expenses at PSEG (parent company).

(E) Includes Discontinued Operations of Energy Technologies in 2003 and 2002, CPC in 2004, 2003 and 2002, and Tanir Bavi in 2002. See Note 4. Discontinued Operations, Dispositions and Acquisitions of the Notes.

(F) Relates to a charge recorded in the second quarter of 2003 from PSE&G's Electric Base Rate Case. See Note 5. Extraordinary Item of the Notes.

(G) Relates to the adoption of SFAS 143 in 2003 and the adoption of SFAS No. 142, "Goodwill and Other Intangible Assets" (SFAS 142) in 2002. See Note 2. Recent Accounting Standards and Note 3. Asset Retirement Obligations of the Notes.

The $131 million, or $0.69 per share, decrease in Income from Continuing Operations for the year ended December 31, 2004, as compared to the same period in 2003, was primarily due to lower earnings at Power due to decreased load being served under the fixed-price BGS contracts, higher Operation and Maintenance costs primarily incurred for work performed during a longer-than-planned refueling outage at the Hope Creek nuclear unit, the loss of MTC revenues, which ceased effective August 1, 2003 at the end of the transition period and higher replacement power and congestion costs in 2004. Also contributing to the decrease were currency fluctuations at Global and lower earnings at Resources, primarily resulting from the termination of the Collins lease. These decreases were partially offset by improved earnings at PSE&G primarily relating to increased electric base rates.

Also contributing to the change in Net Income was Energy Holdings' Income from Discontinued Operations of $5 million for the year ended December 31, 2004, as compared to its Loss from Discontinued Operations of $44 million, after-tax, for the same period in 2003.

The $447 million increase in Income from Continuing Operations for the year ended December 31, 2003, as compared to the same period in 2002, was primarily due to higher earnings from Energy Holdings due to the absence of the $368 million after-tax losses at Energy Holdings' Argentine

investments recorded in 2002. In addition, PSE&G improved earnings due to increased electric base rates, seasonality differences in pricing that are a component of those rates, favorable weather effects and lower interest costs. In addition, Power had slightly higher earnings primarily related to the benefits resulting from the operation of the two generating facilities in Connecticut that were acquired in December 2002, higher margins driven by an increase in volume as a result of the BGS contracts that went into effect in August 2002 and realized gains in its NDT portfolio, partially offset by the effects of storm-related weather and higher Operation and Maintenance expense. Also contributing to Energy Holdings' increase in earnings were improved results from Global. The growth in Income from Continuing Operations did not result in higher per share amounts due to dilution caused mainly by the PSEG Common Stock issuance in the fourth quarter of 2003.

Included in PSEG's 2003 Net Income was an after-tax benefit of $370 million related to the adoption of SFAS 143 during the first quarter of 2003. This benefit was due mainly to the required remeasurement of Power's nuclear decommissioning obligations. Conversely, in 2002, PSEG adopted SFAS 142 and incurred an after-tax charge of $121 million related to goodwill impairments at certain of Energy Holdings' investments. Also contributing to the changes in Net Income was a decrease in Energy Holdings' Loss from Discontinued Operations, including Loss on Disposal of $5 million, after-tax, for the year ended December 31, 2003, as

compared to the same period in 2002, and an $18 million, after-tax, extraordinary charge recorded at PSE&G in the second quarter of 2003 related to the outcome of its electric base rate case, discussed above in PSE&G's Overview of 2004 and Future Outlook.

PSEG

	For the Years Ended December 31,			2004 vs 2003		2003 vs 2002	
	2004	2003	2002	Increase (Decrease)	%	Increase (Decrease)	%
	(Millions)					(Millions)	
Operating Revenues	$10,996	$11,139	$8,220	$ (143)	(1)	$ 2,919	36
Energy Costs	$ 6,057	$ 6,391	$3,710	$ (334)	(5)	$ 2,681	72
Operation and Maintenance	$ 2,260	$ 2,120	$1,899	$ 140	7	$ 221	12
Depreciation and Amortization	$ 719	$ 527	$ 565	$ 192	36	$ (38)	(7)
Income from Equity Method Investments	$ 126	$ 114	$ 119	$ 12	11	$ (5)	(4)
Other Income	$ 176	$ 178	$ 39	$ (2)	(1)	$ 139	356
Other Deductions	$ (93)	$ (101)	$ (80)	$ (8)	(8)	$ 21	26
Interest Expense	$ (859)	$ (836)	$ (819)	$ 23	3	$ 17	2
Income Tax Expense	$ (446)	$ (464)	$ (254)	$ (18)	(4)	$ 210	83

PSEG's results of operations are primarily comprised of the results of operations of its operating subsidiaries, PSE&G, Power and Energy Holdings, excluding changes related to intercompany transactions, which are eliminated in consolidation and certain financing costs at the parent company. For additional information on intercompany transactions, see Note 23. Related-Party Transactions of the Notes. For a discussion of the causes for the variances at PSEG in the table above, see the discussions for PSE&G, Power and Energy Holdings that follow.

PSE&G

	For the Years Ended December 31,			2004 vs 2003		2003 vs 2002	
	2004	2003	2002	Increase (Decrease)	%	Increase (Decrease)	%
	(Millions)					(Millions)	
Operating Revenues	$6,972	$6,740	$5,919	$ 232	3	$ 821	14
Energy Costs	$4,284	$4,421	$3,684	$ (137)	(3)	$ 737	20
Operation and Maintenance	$1,083	$1,050	$ 982	$ 33	3	$ 68	7
Depreciation and Amortization	$ 523	$ 372	$ 409	$ 151	41	$ (37)	(9)
Other Income	$ 12	$ 6	$ 15	$ 6	100	$ (9)	(60)
Other Deductions	$ (1)	$ (1)	$ (2)	$ —	—	$ (1)	(50)
Interest Expense	$ (362)	$ (390)	$ (406)	$ (28)	(7)	$ (16)	(4)
Income Tax Expense	$ (246)	$ (129)	$ (115)	$ 117	91	$ 14	12

Operating Revenues

PSE&G has three sources of revenue: commodity revenues from the sales of energy to customers and in the PJM spot market; delivery revenues from the transmission and distribution of energy through its system; and other operating revenues from the provision of various services.

Commodity

PSE&G makes no margin on commodity sales as the costs are passed through to customers. The difference between costs and the amount provided by customers in revenues is deferred and collected from or returned to customers in future periods. Total commodity volumes and revenues are subject to market forces. Gas commodity prices fluctuate monthly for commercial and industrial customers and annually through the BGSS tariff for residential customers. In addition, for residential gas customers, PSE&G has the ability to adjust rates upward two additional times and downward at any time, if warranted, between annual Basic Gas Supply Service (BGSS) proceedings.

Gas commodity revenues decreased $3 million for the year ended December 31, 2004, as compared to the same period in 2003, due primarily to lower sales volumes of 20%, offset by higher BGSS prices. Approximately 80% of the volume decline was due to lower sales to cogenerators and the balance was weather-related. Electric commodity prices are set at the annual BGS auction. Electric commodity revenues increased $16 million for the year ended December 31, 2004, as compared to the same period in 2003, primarily due to $249 million in increased prices offset by $233 million in lower volumes of 12% caused by migration of large customers to third-party suppliers.

Gas commodity revenues increased $660 million for the year ended December 31, 2003, as compared to the same period in 2002, due primarily to higher sales volumes of 9% and higher BGSS prices. Electric commodity revenues increased $80 million for the year ended December 31, 2003, as compared to the same period in 2002, primarily due to $217 million in increased prices offset by $137 million in lower volumes of 7% caused by migration of large customers to third-party suppliers.

Delivery

Electric delivery revenues increased $222 million for the year ended December 31, 2004, as compared to the same period in 2003. The net effect of full-year base rate increases in August 2003, combined with other annual rate adjustments in January 2004, increased revenues by $180 million. The balance of the increase was driven by higher sales volumes of 3%. Less than one percent of the sales increase was weather-related.

Gas delivery revenues decreased $24 million for the year ended December 31, 2004, as compared to the same period in 2003, primarily due to a 4% decline in residential sales due to weather. Heating degree days were 5% lower in 2004.

Gas delivery revenues increased $97 million for the year ended December 31, 2003, as compared to the same period in 2002, due to higher sales volumes of 14%, primarily due to weather. Heating degree-days were 21% higher in 2003.

Operating Expenses

Energy Costs

The $137 million decrease for the year ended December 31, 2004, as compared to the same period in 2003, was comprised of decreases of $96 million in electric costs and $41 million in gas costs. The electric decrease was caused by $262 million in lower BGS volumes due to customer migration to third-party suppliers offset by $166 million in higher prices for BGS and Non-Utility Generation (NUG) purchases. The gas decrease was caused by a $388 million or 20% decrease in sales volumes due primarily to lower sales to cogenerators offset by a $347 million or 26% increase in gas prices.

The $737 million increase for the year ended December 31, 2003, as compared to the same period in 2002, was comprised of increases of $658 million in gas costs and $79 million in electric costs. The gas increase was caused by a $527 million or 26% increase in gas prices and $131 million or 9% increase in sales volumes. The electric increase was caused by $249 million in higher prices for BGS and NUG purchases, partially offset by $170 million in lower costs due to lower BGS volumes as the result of customer migration and lower NUG volumes.

Operation and Maintenance

The $33 million increase for 2004, as compared to the same period in 2003, was due primarily to increased Demand Side Management (DSM) amortization of $20 million, increased consumer education expenses of $24 million, an $18 million reduction in real estate tax expense in 2003 and $10 million related to a regulatory asset reserve reversal in 2003. DSM costs are deferred when incurred and amortized to expense when recovered in revenues. Offsetting the increases were decreased labor and fringe benefits of $7 million, due to lower pension costs as a result of improved fund performance, a $22 million reduction in Societal Benefits Charges (SBC) expenses and $10 million in lower shared services costs due to reduced technology spending.

The $68 million increase for the year ended December 31, 2003, as compared to the same period in 2002, was due primarily to higher labor and fringe benefit costs of $48 million, due to higher wage and incentive program costs, higher pension costs and increased weather and storm-related expenses due to Hurricane

Isabel and the extreme winter weather. Also contributing to the increase were higher bad debt expense of $10 million due to high winter gas sales and higher DSM costs of approximately $38 million related to the increased sales, discussed above. Partially offsetting these increases were a reduction in real estate tax expense of $18 million and the reversal of a $10 million reserve against a regulatory asset that is now being recovered.

Depreciation and Amortization

The $151 million increase for the year ended December 31, 2004, as compared to the same period in 2003, was due primarily to a $132 million reduction in amortization of an excess electric distribution depreciation reserve regulatory liability, a $30 million increase in the amortization of various regulatory assets and a $10 million increase due to increased plant in service. These increases were offset by a $16 million decrease from the use of a lower book depreciation rate for electric distribution property, which took effect in August 2003 following the conclusion of the electric base rate case, and a $6 million decrease due to plant assets transferred to an affiliate in 2003.

The $37 million decrease for the year ended December 31, 2003, as compared to the same period in 2002, was due primarily to a $52 million increase in amortization of an excess electric distribution depreciation reserve regulatory liability and a $11 million decrease from the use of a lower book depreciation rate for electric distribution property starting in August 2003 due to the rate case referred to above. These decreases were offset by increases of $13 million due to increased plant in service and $9 million due to amortization of regulatory assets related to securitization.

Other Income

The $6 million increase for the year ended December 31, 2004, as compared to the same period in 2003, was due primarily to $11 million of equity return adjustments to regulatory assets in 2003, $4 million of interest income related to an affiliate loan and other Investment Income of $3 million offset by decreased gains on excess property sales of $12 million.

The $9 million decrease for the year ended December 31, 2003, as compared to the same period in 2002, was due primarily to equity return adjustments to regulatory assets of $11 million offset by $2 million in increased gains on the disposal of various electric transmission properties.

Interest Expense

The $28 million decrease for the year ended December 31, 2004, as compared to the same period in 2003, was due primarily to lower interest on long-term debt of $37 million as a result of lower interest rates and lower levels of long-term debt outstanding, partially offset by $11 million in increased interest on affiliated loans.

The $16 million decrease for the year ended December 31, 2003, as compared to the same period in 2002, was due primarily to lower interest on long-term debt of $23 million due to various maturities and redemptions of approximately $250 million. These decreases were partially offset by increased short-term interest expense of $2 million due to higher short-term debt balances outstanding due to increased working capital needs and $6 million in increased carrying charges related to certain regulatory assets.

Income Taxes

The $117 million increase for the year ended December 31, 2004, as compared to the same period in

2003, was primarily due to higher pre-tax income combined with lower tax benefits primarily attributable to the excess depreciation reserve adjustment in 2003.

The $14 million increase for the year ended December 31, 2003, as compared to the same period in 2002, was due to higher pre-tax income, offset by tax benefits recorded in 2003 attributable to the actual filing of the 2002 tax return.

Extraordinary Item

As discussed previously, included in the Electric Base Rate Case decision issued by the BPU was a refund related to revenues collected through the SBC for nuclear decommissioning. Because this amount

reflects the final accounting for PSEG's generation-related business pursuant to the four-year transition plan mandated by the Final Order, the adjustment has been recorded as an $18 million, after-tax, Extraordinary Item as required under Accounting Principles Board (APB) Opinion No. 30, "Reporting the Results of Operations—Reporting the Effects of Disposal of a Segment of a Business, and Extraordinary, Unusual and Infrequently Occurring Events and Transactions" (APB 30) and SFAS No. 101, "Regulated Enterprises—Accounting for the Discontinuation of Application of Financial Accounting Standards Board (FASB) Statement No. 71."

Power

	For the Year Ended December 31,			2004 vs 2003		2003 vs 2002	
	2004	2003	2002	Increase (Decrease)	%	Increase (Decrease)	%
	(Millions)					(Millions)	
Operating Revenues	$5,173	$5,613	$3,640	$ (440)	(8)	$ 1,973	54
Energy Costs	$3,558	$3,754	$1,856	$ (196)	(5)	$ 1,898	102
Operation and Maintenance	$ 967	$ 914	$ 773	$ 53	6	$ 141	18
Depreciation and Amortization	$ 121	$ 102	$ 108	$ 19	19	$ (6)	(6)
Other Income	$ 166	$ 149	$ 1	$ 17	11	$ 148	n/a
Other Deductions	$ (57)	$ (78)	$ (1)	$ (21)	(27)	$ 77	n/a
Interest Expense	$ (142)	$ (114)	$ (122)	$ 28	25	$ (8)	(7)
Income Tax Expense	$ (186)	$ (326)	$ (313)	$ (140)	(43)	$ 13	4

Operating Revenues

Operating Revenues decreased by $440 million for the year ended December 31, 2004, as compared to the same period in 2003, due to decreases of $485 million in generation revenues and $5 million in trading revenues offset by an increase of $50 million in gas supply revenues.

Operating Revenues increased by $2 billion for the year ended December 31, 2003, as compared to the same period in 2002, due to increases of $646 million in generation revenues, $1.3 billion in gas supply revenues and $12 million in trading revenues.

Generation

Generation revenues decreased by $485 million for the year ended December 31, 2004, as compared to the same period in 2003, primarily due to $1.1 billion in lower revenues due to decreased load being served under the fixed-priced BGS contracts, which was partially offset by $869 million of higher revenues from new contracts and higher sales into the various power pools. Additionally, the loss of MTC and NDT revenues, which amounted to $111 million and $17 million, respectively, comprised part of the decrease.

Also contributing to the decrease was the adoption of Emerging Issues Task Force (EITF) Issue No. 03-11, "Reporting Realized Gains and Losses on Derivative Instruments That Are Subject to FASB Statement No. 133, Accounting for Derivative Instruments and Hedging Activities," and Not "Held for Trading Purposes" as defined in EITF Issue No. 02-3, "Issues Involved in Accounting for Derivative Contracts Held for Trading Purposes and Contracts Involved in Energy Trading and Risk Management

Activities" (EITF 03-11), which requires gains and losses (realized and unrealized) on all derivative instruments within the scope of SFAS No. 133, "Accounting for Derivative Instruments and Hedging Activities" (SFAS 133) to be shown net when recognized in the Consolidated Statement of Operations, whether or not settled physically, if the derivative instruments are "held for trading purposes" as defined in EITF 02-3, which became effective on a prospective basis for transactions occurring after September 30, 2003. Since prior periods were not restated, the effect of adopting EITF 03-11 reduced Power's Operating Revenues by approximately $174 million, with an equal reduction in Energy Costs, as compared to the same period in 2003.

Generation revenues increased by $646 million for the year ended December 31, 2003, as compared to the same period in 2002, primarily due to increased BGS related revenues of $293 million from third-party wholesale electric suppliers which commenced on August 1, 2002 and $153 million in increased revenues from two generation facilities in Connecticut acquired in 2002 and the Waterford, Ohio plant, which became operational in August 2003. Also contributing to the increase were increased MTC revenues of $13 million,

increased capacity sales of $41 million and $167 million of higher revenues from new contracts and higher sales into the various power pools.

Gas Supply

Gas supply revenues increased by $50 million for the year ended December 31, 2004, as compared to the same period in 2003, primarily due to higher gas prices under the BGSS contract partially offset by decreased sales volumes mainly due to demand by PSE&G.

Gas supply revenues increased by $1.3 billion for the year ended December 31, 2003, as compared to the same period in 2002, primarily due to 2003 being the first full year of the BGSS contract with PSE&G compared to a partial year in 2002 since the contract commenced in May 2002. Gas revenues for the first four months of 2003 totaled $1.1 billion. Also contributing to the increase in gas revenues were higher sales volumes and higher gas prices.

Operating Expenses

Energy Costs

Energy Costs represent the cost of generation, which includes fuel purchases for generation as well as purchased energy in the market, and gas purchases to meet Power's obligation under its BGSS contract with PSE&G.

Energy Costs decreased approximately $196 million for the year ended December 31, 2004, as compared to the same period in 2003, primarily due to a $216 million decrease in purchased power due to decreased load being served under the BGS contracts, which was offset by increased replacement power costs due to outages and higher purchased power for new contracts and a $12 million increase in gas supply costs due to higher gas prices. For additional information related to the outages at Power facilities, see the MD&A—Overview of 2004 and Future Outlook—Power. Also contributing to the decrease for the year was a reduction of approximately $174 million related to the adoption of EITF 03-11, as discussed above. Partially offsetting these decreases were higher fuel costs for generation of approximately $159 million, primarily related to higher gas prices and higher usage, including an increase of approximately $20 million related to the settlement for nuclear waste storage costs for Peach Bottom. For additional information regarding the settlement, see Note 14. Commitments and Contingent Liabilities—Nuclear Fuel Disposal of the Notes.

Energy Costs increased approximately $1.9 billion for the year ended December 31, 2003, as compared to the same period in 2002, primarily due to a $1.3 billion increase in gas costs due to the effect of a full year under the BGSS contract combined with higher gas sales volumes and prices and higher gas, oil and coal costs for generation. The increase in Energy Costs was also due to increased energy purchases on the spot market, as well as bilateral energy purchases, of approximately $413 million. Also, Power incurred an increase of approximately $116 million in network transmission expenses given that there were no payments for the first seven months in 2002. In addition, charges associated with fuel and energy purchases to satisfy wholesale power agreements related to its Connecticut generating facilities totaled approximately $80 million for the year ended December 31, 2003.

Operation and Maintenance

Operation and Maintenance expense increased $53 million for the year ended December 31, 2004, as

compared to the same period in 2003, due to increased costs of $85 million related to the outages at Hope Creek, Salem and Mercer. For additional information related to the outages at Power facilities, see the MD&A—Overview of 2004 and Future Outlook—Power. Also contributing to the increase was $10 million of higher operation and maintenance costs related to the Waterford and Lawrenceburg facilities offset by $12 million related to the settlement for nuclear waste storage costs for Peach Bottom, $10 million in lower real estate taxes and other items. Additional offsets include the absence of reorganization costs of $9 million and the lower write-down costs related to obsolete materials and supplies of $8 million. For additional information regarding the settlement, see Note 14. Commitments and Contingent Liabilities—Nuclear Fuel Disposal of the Notes.

Operation and Maintenance expense increased $141 million for the year ended December 31, 2003, as compared to the same period in 2002, due to costs of generating facilities in Connecticut acquired in December 2002 of $56 million, accretion expense of $24 million associated with the nuclear decommissioning

liabilities and higher nuclear refueling outage costs of $24 million. Also contributing to the increase was higher pension expense of $20 million, higher reorganization costs of $9 million and higher write-down costs related to obsolete materials and supplies of $8 million.

Depreciation and Amortization

Depreciation and Amortization expense increased $19 million for the year ended December 31, 2004, as compared to the same period in 2003, primarily due to the Waterford facility being placed into service in August 2003 and the Lawrenceburg facility being placed into service in June 2004.

Depreciation and Amortization expense decreased $6 million for the year ended December 31, 2003, as compared to the same period in 2002. The net decrease was comprised of lower depreciation costs of approximately $30 million due to the absence of decommissioning charges, which are no longer recorded as a result of the implementation of SFAS 143, partially offset by higher depreciation and amortization primarily related to generating facilities in Connecticut acquired in December 2002 and a higher asset base.

Other Income

Other Income increased $17 million for the year ended December 31, 2004, as compared to the same period in 2003, due primarily to increased realized gains and income related to the NDT Funds.

Other Income increased $148 million for the year ended December 31, 2003, as compared to the same period in 2002, due primarily to the recording of realized gains and income on the NDT Funds.

Other Deductions

Other Deductions decreased by $21 million for the year ended December 31, 2004, as compared to the same period in 2003, primarily due to $28 million in lower realized losses and expenses related to the NDT Funds partially offset by a $7 million write-off of unamortized issuance costs related to the extinguishment of project financing related to Power's Waterford and Lawrenceburg facilities.

Other Deductions increased by $77 million for the year ended December 31, 2003, as compared to the same period in 2002, due primarily to the recording of realized losses on the NDT Funds.

Interest Expense

Interest Expense increased by $28 million for the year ended December 31, 2004, as compared to the same period in 2003, including $17 million of increased interest primarily due to higher interest rates on new long-term debt financing that replaced project level non-recourse debt. Also contributing to the increase was interest of $7 million related to the early settlement of an interest rate swap related to the extinguishment of project financing related to the Waterford and Lawrenceburg facilities and higher interest of $4 million related to an affiliate loan.

Interest Expense decreased by $8 million for the year ended December 31, 2003, as compared to the same period in 2002. Capitalized interest relating to various construction projects reduced interest expense by approximately $13 million for the year ended December 31, 2003, as compared to the same period in 2002. Power incurred additional interest charges of $20 million due primarily to the new long-term financing of $600 million in June 2002, this increase was partially offset by lower interest expense on variable rate debt and other lower charges of approximately $15 million.

Income Taxes

Income taxes decreased by $140 million for the year ended December 31, 2004, as compared to the same period in 2003, due primarily to lower pre-tax income.

Income taxes increased by $13 million for the year ended December 31, 2003, as compared to the same period in 2002, due primarily to higher pre-tax income.

Cumulative Effect of a Change in Accounting Principle

For the year ended December 31, 2003, Power recorded an after-tax benefit in the amount of $370 million due to the required remeasurement of Power's nuclear and fossil decommissioning obligations under

SFAS 143, which was adopted on January 1, 2003. See Note 3. Asset Retirement Obligations of the Notes for additional information.

Energy Holdings

	For the Years Ended December 31,			2004 vs 2003		2003 vs 2002	
	2004	2003	2002	Increase (Decrease)	%	Increase (Decrease)	%
	(Millions)					(Millions)	
Operating Revenues	$1,027	$ 725	$ 609	$ 302	42	$ 116	19
Energy Costs	$ 388	$ 155	$ 118	$ 233	150	$ 37	31
Operation and Maintenance	$ 239	$ 176	$ 168	$ 63	36	$ 8	5
Write-down of Project Investments	$ —	$ —	$ 511	$ —	—	$ (511)	(100)
Depreciation and Amortization	$ 57	$ 44	$ 28	$ 13	30	$ 16	57
Income from Equity Method Investments	$ 126	$ 114	$ 119	$ 12	11	$ (5)	(4)
Other Income	$ 4	$ 20	$ 26	$ (16)	(80)	$ (6)	(23)
Other Deductions	$ (33)	$ (5)	$ (77)	$ 28	560	$ (72)	(94)
Interest Expense	$ (255)	$(218)	$(217)	$ 37	17	$ 1	—
Income Tax (Expense) Benefit	$ (48)	$ (59)	$ 144	$ (11)	(19)	$ 203	141

The variances in Operating Revenues, Energy Costs, Operation and Maintenance expense, Depreciation and Amortization expense and Income from Equity Method Investments were primarily attributed to Global's acquisition of the remaining interests in TIE, thus consolidating the entity effective July 1, 2004, as compared to 2003 when Global's ownership was accounted for under the equity method of accounting. For additional information, see Note 4. Discontinued Operations, Dispositions and Acquisitions of the Notes. The increases were also due to ELCHO placing a new generation facility in Poland in service in November 2003, a generation facility in Oman owned by Dhofar Power Company S.A.O.C. (Dhofar Power) beginning commercial operation in May 2003 and increases in ownership of Electrowina Skawina S.A (Skawina) in Poland in 2003 and 2004. The variances are also related to favorable foreign currency exchange rates and higher energy sales volumes at Sociedad Austral de Electricidad S.A. (SAESA) and a change for GWF Energy LLC (GWF Energy), which owns three generation facilities in California, which was accounted for under the equity method of accounting in 2004, due to a change in ownership interest, as compared to the first nine months of 2003 and the fourth quarter of 2002 when GWF Energy was consolidated.

Operating Revenues

The increase of $302 million for the year ended December 31, 2004, as compared to the same period in 2003, was due to higher revenues at Global of $355 million, including a $247 million increase related to the consolidation of TIE, a $62 million increase from ELCHO, a $35 million increase from SAESA, a $25 million increase from Dhofar Power and a $35 million gain on the sale of MPC, partially offset by a decrease of $53 million related to GWF Energy, which was not consolidated in 2004. Offsetting the increases at Global were lower revenues at Resources of $51 million, primarily due to a loss of $31 million related to the recalculation of certain leverage leases, a loss of $11 million due to the termination of the lease investment in the Collins generating facility and normal amortization of existing leases of $10 million offset by a realized gain of $2 million related to investments in leases, partnerships and

securities. See Note 10. Long-Term Investments of the Notes for additional information.

The increase of $116 million for the year ended December 31, 2003, as compared to the same period in 2002, was due to higher revenues at Global of $124 million, including a $47 million increase from Skawina, a $38 million increase from Dhofar Power, a $28 million increase from GWF Energy, which was consolidated for nine months in 2003 compared to three months in 2002, and a $19 million increase from SAESA, offset by the absence of $19 million in revenue from Empresa Distribuidora de Electricidad de Entre Rios S.A. (EDEERSA), in Argentina, which was abandoned in 2003. Offsetting the increases at Global were lower revenues at Resources of $10 million, primarily related to a $45 million net decrease in leveraged lease income and a $6 million decrease in realized income due to the termination of two leveraged leases in December 2002. Partially offsetting these decreases was the absence of an other than temporary impairment of non-publicly traded equity securities held within the leveraged buyout funds of $42 million that was recorded in 2002.

Energy Costs

The increase of $233 million for the year ended December 31, 2004, as compared to the same period in 2003, was primarily due to a $192 million increase related to the consolidation of TIE and increases of $22 million, $12 million and $5 million from SAESA, ELCHO and Dhofar Power, respectively, offset by a decrease of $3 million from GWF Energy.

The increase of $37 million for the year ended December 31, 2003, as compared to the same period in 2002, was primarily due to an increase of $21 million, $14 million, and $13 million from Skawina, SAESA and Dhofar Power, respectively, offset by a decrease of $7 million and $5 million from EDEERSA and Electroandes S.A. (Electroandes), respectively.

Operation and Maintenance

The increase of $63 million for the year ended December 31, 2004, as compared to the same period in 2003, was primarily due to a $30 million increase related to the consolidation of TIE and increases of $12 million, $9 million, and $2 million from ELCHO, SAESA and Dhofar Power, respectively, offset by a decrease of $8 million from GWF Energy. The increase is also due to higher operating expenses of $9 million at PSEG Energy Technologies Asset Management Company L.L.C. primarily due to higher legal expenses and final asset sale settlements and $7 million at Global primarily due to the 2003 reversal of contingencies related to the Argentine write-down.

The increase of $8 million for the year ended December 31, 2003, as compared to the same period in 2002, was primarily due to increases of $19 million, $7 million, $6 million and $6 million from Skawina, Dhofar Power, GWF Energy and Electroandes, respectively, offset by decreased operation and maintenance expenses at Global of $28 million related to the abandonment of Global's Argentine investments combined with lower labor and administrative costs.

Write-down of Project Investments

The decrease of $511 million for the year ended December 31, 2003, as compared to the same period in 2002, was primarily due to Global's write-down of investments in 2002, primarily in Argentina. See Note 6. Asset Impairments of the Notes.

Depreciation and Amortization

The increase of $13 million for the year ended December 31, 2004, as compared to the same period in 2003, was primarily due to a $9 million increase related to the consolidation of TIE and increases of $7 million, $5 million and $2 million from ELCHO, Dhofar Power and SAESA, respectively, offset by a decrease of $11 million from GWF Energy.

The increase of $16 million for the year ended December 31, 2003, as compared to the same period in 2002, was primarily due to increases of $8 million from both Dhofar Power and GWF Energy.

Income from Equity Method Investments

The increase of $12 million for the year ended December 31, 2004, as compared to the same period in 2003, was primarily driven by an $8 million increase related to the sale of a portion of Global's investment in LDS, an $11 million increase related to MPC due to additional projects going into operation, and a $4 million increase related to GWF Energy, offset by an $11 million decrease related to

the consolidation of TIE commencing July 1, 2004.

The decrease of $5 million for the year ended December 31, 2003, as compared to the same period in 2002, was primarily due to lower equity method income in 2003 of $17 million at GWF Energy, which was recorded as a consolidated company for the first three quarters in 2003, as well as decreased earnings at Chilquinta Energia S.A. (Chilquinta) of $4 million. Partially offsetting this decrease were improved earnings at TIE of $14 million related to power purchase agreements (PPAs) entered into in early 2003 and improved market conditions in Texas.

Other Income

The decrease of $16 million for the year ended December 31, 2004, as compared to the same period in 2003, was primarily due to the absence in 2004 of foreign currency transaction gains of $16 million for RGE and SAESA that occurred in 2003.

The decrease of $6 million for the year ended December 31, 2003, as compared to the same period in 2002, was primarily due to the absence of favorable changes in fair value mainly relating to foreign exchange contracts held by Energy Holdings.

Other Deductions

The increase of $28 million for the year ended December 31, 2004, as compared to the same period in 2003, was primarily due to foreign currency transaction losses of $26 million and a loss on early extinguishment of debt of $3 million in 2004, offset by a $5 million favorable change in derivative fair value related to Global. The $26 million in foreign currency transaction losses was almost entirely due to the impact of the weakening U.S. Dollar relative to the Polish Zloty on Global's investment in ELCHO. At the inception of this investment, it was determined that ELCHO is a U.S. Dollar functional currency as a portion of the long-term PPA with the Polish government is indexed to the U.S. Dollar to support the portion of ELCHO's financing that is U.S. Dollar denominated. Since ELCHO has a U.S. Dollar functional currency, all monetary assets and liabilities that are not denominated in U.S. Dollars are marked at period-end exchange rates with changes in values recorded as gains or losses in earnings. ELCHO has significant monetary liabilities in local currency, namely Polish Zloty debt used to partially finance the construction of the plant. As a result of the strengthening of the Polish Zloty against the U.S. Dollar in 2004, there were material losses recorded on the Polish Zloty debt to reflect the greater amount of U.S. Dollars required to pay the local debt. However, the accounting model does not capture the increase in value of Polish Zlotys that will be received under the long-term PPA with the Polish government as the contract is not recorded on the balance sheet. As a result, the financial statements only reflect the losses on the Polish Zloty debt which, economically, have been more than offset by the increase in the value of the Polish Zlotys that will be received under the PPA.

The decrease of $72 million for the year ended December 31, 2003, as compared to the same period in 2002, was largely due to a $77 million foreign currency transaction loss during 2002, which primarily related to Global's Argentine investments.

Interest Expense

The increase of $37 million for the year ended December 31, 2004, as compared to the same period in 2003, was due to a $13 million increase related to the consolidation of TIE commencing on July 1, 2004, a $29 million increase related to ELCHO since interest was no longer capitalized as the plant became operational in the fourth quarter of 2003, and an increase in non-recourse debt at the project level with higher interest rates, offset in part by the repayment of lower interest rate debt at Energy Holdings during 2003 and 2004.

Income Taxes

The decrease of $11 million for the year ended December 31, 2004, as compared to the same period in 2003, was primarily due to lower pre-tax income and the impact of changes in certain lease forecast assumptions. In the fourth quarter of 2004, Resources revised several of its lease runs and recorded additional benefits of state tax losses generated by certain of its leases. These additional benefits resulted

from changes in Resources' forecast of state taxable income and tax liability over the relevant lease terms. This forecast was embedded in the lease reruns and led to an income tax benefit of $43 million in 2004 to reflect the cumulative benefit of this adjustment. This benefit was largely offset by the tax impact associated with a $31 million decrease in leveraged lease revenue. Future earnings will also increase by a modest amount as a result of this forecasted benefit. If Resources affiliates' taxable earnings decreased significantly, resulting in the inability of Resources to record the benefits related to its taxable losses, it could lead to an adverse material impact to Resources' results of operations, financial position and cash flows. See Note 17. Income Taxes of the Notes for additional information.

The increase of $203 million for the year ended December 31, 2003, as compared to the same period in 2002, was primarily attributed to increased pre-tax income for the year ended December 31, 2003, as

compared to pre-tax losses in the same period in 2002. The pre-tax losses in 2002 resulted from the write-off of $511 million, primarily related to investments in Argentina. See Note 6. Asset Impairments of the Notes.

Income (Loss) from Discontinued Operations, including Gain (Loss) on Disposal, net of tax

Carthage Power Company (CPC)

In May 2004, Global completed the sale of its interest in CPC for approximately $43 million in cash and recognized a gain on disposal of $5 million after-tax. Loss from Discontinued Operations for the year ended December 31, 2003 was $24 million including a $23 million estimated loss on disposal for the write-down of CPC to its fair value less cost to sell. The operating results of CPC for the year ended December 31, 2002 yielded after-tax income of approximately $1 million. See Note 4. Discontinued Operations, Dispositions and Acquisitions of the Notes for additional information.

Energy Technologies

In September 2003, Energy Holdings completed the sale of the remaining companies of Energy Technologies subsequent to recognizing a loss of $9 million, after-tax, in the first quarter of 2003. Loss from Discontinued Operations for years ended December 31, 2003 and 2002 were $11 million and $41 million, respectively, including the initial write-down in 2002. See Note 4. Discontinued Operations, Dispositions and Acquisitions of the Notes for additional information.

Tanir Bavi

In the fourth quarter of 2002, Global sold its 74% interest in Tanir Bavi, a 220 MW generating facility in India. Global reduced the carrying value of Tanir Bavi to the contracted sales price of $45 million and recorded a loss on disposal of $14 million after-tax for the year ended December 31, 2002. The operating results of Tanir Bavi for the year ended December 31, 2002 yielded after-tax income of $5 million. See Note 4. Discontinued Operations, Dispositions and Acquisitions of the Notes.

Cumulative Effect of Change in Accounting Principle

In 2002, Energy Holdings finalized the evaluation of the effect of adopting SFAS 142 on its recorded amount of goodwill. Under this standard, Energy Holdings was required to complete an impairment analysis of its recorded goodwill and record any resulting impairment. The total amount of goodwill impairments was $121 million, net of tax of $66 million and was comprised of $36 million (after-tax) at EDEERSA, $35 million (after-tax) at RGE, $32 million (after-tax) at Energy Technologies and $18 million (after-tax) at Tanir Bavi. All of the goodwill on these companies, other than RGE, was fully impaired. In accordance with SFAS 142, this impairment charge was recorded as of January 1, 2002 as a component of the Cumulative Effect of a Change in Accounting Principle and is reflected in the Consolidated Statement of Operations for the year ended December 31, 2002. See Note 9. Goodwill and Other Intangibles of the Notes.

Other

To supplement the Consolidated Financial Statements presented in accordance with accounting principles generally accepted in the U.S. (GAAP), PSEG and Energy Holdings use the non-GAAP measure of Earnings Before Interest and Taxes (EBIT).

PSEG's and Energy Holdings' Management each reviews EBIT internally to evaluate performance and manage operations and believes that the inclusion of this non-GAAP financial measure provides consistent and comparable measures to help shareholders understand current and future operating results. PSEG and Energy Holdings urge shareholders to carefully review the GAAP financial information included as part of this Annual Report.

Global

The following table summarizes Global's capital at risk, net contributions to EBIT and non-recourse interest in the following regions as of December 31, 2004 and 2003 and for the years ended December 31, 2004, 2003 and 2002.

	Total Capital at Risk(A)		EBIT(B)			Non-Recourse Interest(C)		
	As of December 31, 2004	As of December 31, 2003	2004	2003	2002	2004	2003	2002
			(Millions)					
Region:								
North America	$ 427	$ 423	$ 98	$ 117	$ 122	$13	$ 2	$—
South America	1,581	1,575	135	150	(441)	33	27	44
Asia Pacific(D)	6	180	54	8	7	—	—	—
Europe(E)	209	285	24	22	(8)	33	5	—
India and Oman	94	91	18	9	—	15	9	—
Global G&A—Unallocated	—	—	(31)	(30)	(38)	—	—	—
Total	$ 2,317	$ 2,554	$ 298	$ 276	$(358)	$94	$43	$44
Total Global EBIT			$ 298	$ 276	$(358)			
Interest Expense			(170)	(119)	(118)			
Income Taxes(D)			(49)	(23)	178			
Minority Interests			(1)	(13)	1			
Income from Continuing Operations			$ 78	$ 121	$(297)			

(A) Total Capital at Risk includes Global's gross investments and equity commitment guarantees less non-recourse debt at the project level.

(B) For investments accounted for under the equity method of accounting, includes Global's share of net earnings, including Interest Expense and Income Taxes.

(C) Non-recourse interest is Interest Expense on debt that is non-recourse to Global.

(D) The differences in EBIT and Capital at Risk for Asia Pacific and Income Taxes are primarily due to the sale of MPC which closed on December 31, 2004. The 2004 Capital at Risk does not include the $136 million promissory note received from the sale of MPC. See Note 4. Discontinued Operations, Dispositions and Acquisitions of the Notes.

NOTES TO CONSOLIDATED FINANCIAL STATEMENTS

$25 million contingent guarantee related to debt service obligations of Chilquinta in Chile expiring in 2011. Additional guarantees consist of a $35 million and $37 million leasing agreement guarantee for Prisma in Italy as of December 31, 2004 and 2003, respectively, $13 million and $24 million of performance and payment guarantees related to Energy Technologies as of December 31, 2004 and 2003, respectively, that are supported by letters of credit that expire in May 2005, and various other guarantees comprising the remaining $39 million and $45 million as of December 31, 2004 and 2003, respectively, expiring through 2010.

In September 2003, Energy Holdings completed the sale of Energy Technologies and nearly all of its assets. However, Energy Holdings retained certain outstanding construction and warranty obligations related to ongoing construction projects previously performed by Energy Technologies. These construction obligations have performance bonds issued by insurance companies for which exposure is adequately supported by the outstanding letters of credit described above. As of December 31, 2004, there were $30 million of such bonds outstanding, which are related to uncompleted construction projects. These performance bonds are not included in the $138 million of guaranteed obligations discussed above.

In addition to the amounts discussed above, certain subsidiaries of Energy Holdings also have contingent obligations related to their respective projects, which are non-recourse to Energy Holdings and Global.

Environmental Matters

PSEG, PSE&G and Power

Hazardous Substances

The New Jersey Department of Environmental Protection (NJDEP) adopted regulations concerning site investigation and remediation that require an ecological evaluation of potential damages to natural resources in connection with an environmental investigation of contaminated sites. These regulations may substantially increase the costs of environmental investigations and necessary remediation, particularly at sites situated on surface water bodies. PSE&G, Power and respective predecessor companies own or owned and/or operate or operated certain facilities situated on surface water bodies, certain of which are currently the subject of remedial activities. The financial impact of these regulations on these projects is not currently estimable. However, neither PSE&G nor Power anticipate that compliance with these regulations will have a material adverse effect on its respective financial position, results of operations or net cash flow.

The U.S. Environmental Protection Agency (EPA) has determined that a six mile stretch of the Passaic River in the area of Newark, New Jersey is a "facility" within the meaning of that term under the Federal Comprehensive Environmental Response, Compensation and Liability Act of 1980 (CERCLA). PSE&G and certain of its predecessors conducted industrial operations at properties adjacent to the Passaic River facility. The operations included one operating (Essex Site, one former generating station and four former MGPs. PSE&G's costs to clean up former MGPs are recoverable from utility customers through the SBC. PSE&G has sold the site of the former generating station and obtained releases and indemnities for liabilities arising out of the site in connection with the sale. The Essex Site was transferred to Power in August 2000. Power assumed any environmental liabilities of PSE&G associated with the electric generating stations that PSE&G transferred to it, including the Essex Site.

In 2003, the EPA notified 41 potentially responsible parties (PRPs), including PSE&G and Power, that it was expanding its assessment of the Passaic River Study Area to the entire 17-mile tidal reach of the lower Passaic River. The EPA further indicated, with respect to PSE&G, that it believed that hazardous substances were being released from the Essex Site and a former MGP located in Harrison, New Jersey (Harrison Site), which also includes facilities for PSE&G's ongoing gas operations. The EPA has estimated that its study would require five to eight years to complete and would cost approximately $20 million, of which it would seek to recover $10 million from the PRPs, including PSE&G and Power. Power is evaluating recoverability of any disbursed amounts from its insurance carriers.

Also, in 2003, PSEG, PSE&G and 56 other PRPs received a Directive and Notice to Insurers from the NJDEP that directed the PRPs to arrange for a natural resource damage assessment and interim compensatory restoration of natural resource injuries along the lower Passaic River and its tributaries pursuant to the New Jersey Spill Compensation and Control Act. The NJDEP alleged in the Directive that it had determined that hazardous substances had been discharged from the Essex Site and the Harrison Site.

920980684

The NJDEP announced that it had estimated the cost of interim natural resource injury restoration activities along the lower Passaic River to approximate $950 million.

PSE&G and Power have indicated to both the EPA and NJDEP that they are willing to work with the agencies in an effort to resolve their respective claims and, along with approximately 40 other PRPs, have executed an agreement with the EPA that provides for sharing the costs of the study between the government organizations and the PRPs. PSEG, PSE&G and Power cannot predict what further actions, if any, or the costs or the timing thereof, that may be required with respect to the Passaic River or natural resource damages. However, such costs could be material.

PSE&G

MGP Remediation Program

PSE&G is currently working with the NJDEP under a program to assess, investigate and remediate environmental conditions at PSE&G's former MGP sites (Remediation Program). To date, 38 sites have been identified as sites requiring some level of remedial action. The Remediation Program is periodically reviewed, and the estimated costs are revised by PSE&G based on regulatory requirements, experience with the program and available remediation technologies. Since the inception of the program in 1988 through December 31, 2004, PSE&G had expenditures of approximately $294 million.

During the fourth quarter of 2004, PSE&G refined the detailed site estimates, and determined that total Remediation Program costs could range between $650 million and $685 million. No amount within the range was considered to be most likely. Therefore, $356 million was accrued at December 31, 2004, which represents the difference between the low end of the total program cost estimate of $650 million and the total incurred costs through December 31, 2004 of $294 million. Of this amount, approximately $47 million was recorded in Other Current Liabilities and $309 million was reflected in Other Noncurrent Liabilities. The costs associated with the MGP Remediation Program have historically been recovered through the SBC charges to PSE&G ratepayers. As such, a $356 million Regulatory Asset was also recorded.

Costs for the MGP Remediation Program were approximately $34 million in 2004. PSE&G anticipates spending $47 million in 2005, $35 million in 2006, and an average of $26 million per year through 2016.

New Jersey Clean Energy Program

The BPU has approved a new funding requirement for each New Jersey utility applicable to Renewable Energy and Energy Efficiency programs for the years 2005 to 2008. The sum of PSE&G's electric and gas funding requirement for 2005 is $82 million and grows to $137 million in 2008 for a four-year total of $406 million. A liability for PSE&G's funding requirement has been recorded at discounted present value with an offsetting regulatory asset.

Power

Prevention of Significant Deterioration (PSD)/New Source Review (NSR)

The PSD/NSR regulations, promulgated under the Clean Air Act (CAA), require major sources of

certain air pollutants to obtain permits, install pollution control technology and obtain offsets, in some circumstances, when those sources undergo a "major modification," as defined in the regulations. The Federal government is seeking to order companies allegedly not in compliance with the PSD/NSR regulations to install the best available control technology at the affected plants and to pay monetary penalties of up to approximately $27,500 for each day of continued violation.

The EPA and the NJDEP issued a demand in March 2000 under the CAA requiring information to assess whether projects completed since 1978 at the Hudson and Mercer coal-burning units were implemented in accordance with applicable PSD/NSR regulations. Power completed its response to the requests for information and, in January 2002, reached an agreement with New Jersey and the Federal government to resolve allegations of noncompliance with PSD/NSR regulations. Under that agreement, over the course of 10 years, Power has agreed to install advanced air pollution controls that are designed to reduce emissions of NO_x, SO_2, particulate matter and mercury. The estimated cost of the program as of December

31, 2004 includes approximately $110 million for installation of selective catalytic reduction systems (SCRs) at Mercer, of which approximately $92 million has been spent, as well as approximately $300 million to $350 million at the Hudson unit and $150 million to $200 million for other pollution control equipment at Mercer to be installed by December 31, 2012. Power also paid a $1.4 million civil penalty and has agreed to spend up to $6 million on supplemental environmental projects. The agreement resolving the NSR allegations concerning the Hudson and Mercer coal-fired units also resolved a dispute over Bergen 2 regarding the applicability of PSD requirements and allowed construction of the unit to be completed and operations to commence.

Power has notified the EPA and the NJDEP that it is evaluating the continued operation of the Hudson coal unit in light of changes in the energy and capacity markets, increases in the cost of pollution control equipment and other necessary modifications to the unit. These and other factors impacting the power industry identified to the agencies continue to cast doubts on the appropriateness of making the necessary investments and Power's ability to complete the work at this time. A decision has not yet been made as to the Hudson unit's continued operation beyond the December 31, 2006 deadline for installation of pollution control equipment. The related costs associated with the pollution control modifications for the Hudson unit have not been included in Power's capital expenditure projections.

ISRA

Potential environmental liabilities related to subsurface contamination at certain generating stations have been identified. In the second quarter of 1999, in anticipation of the transfer of PSE&G's generation-related assets to Power, a study was conducted pursuant to ISRA, which applies to the sale of certain assets. PSEG had a $51 million liability as of December 31, 2004 related to these obligations, which is recorded on the Consolidated Balance Sheets.

New Generation and Development

Power

Completion of the projects discussed below, within the estimated time frames and cost estimates cannot be assured. Construction delays, cost increases and various other factors could result in changes in the operational dates or ultimate costs to complete.

Power is constructing the Bethlehem Energy Center, which will replace the Albany Station. Total costs for this project are expected to be approximately $551 million with expenditures to date of approximately $496 million (including IDC of $52 million). Construction began in 2002 with the expected completion date in mid-2005, at which time the existing station will be retired.

Power is constructing a natural gas-fired generation plant in Linden, New Jersey. Power is replacing the tubes in both steam turbine condensers due to corrosion that was detected. Power anticipates that construction will be completed in the second quarter of 2006. Including the replacement of the tubes, the total costs are currently estimated at approximately $1 billion with expenditures to date of approximately $880 million (including IDC of $135 million).

Power also has contracts with outside parties to purchase upgraded turbines for Salem Units 1 and 2 and to purchase upgraded turbines and complete a power uprate for Hope Creek to modestly increase its generating capacity. Salem Unit 2 completed Phase I of its turbine replacement during its Fall 2003

NOTES TO CONSOLIDATED FINANCIAL STATEMENTS

	Power	Guarantor Subsidiaries	Other Subsidiaries	Consolidating Adjustments	Total
			(Millions)		
For the Year Ended December 31, 2003:					
Net Cash Provided By (Used In) Operating Activities	$ 2,171	$ 262	$ (120)	$ (1,689)	$ 624
Net Cash Provided By (Used In) Investing Activities	$(1,985)	$ (548)	$ (255)	$ 1,956	$ (832)
Net Cash Provided By (Used In) Financing Activities	$ (186)	$ 587	$ 374	$ (566)	$ 209
For the Year Ended December 31, 2002:					
Revenues	$ 2	$ 4,503	$ 42	$ (907)	$ 3,640
Operating Expenses	—	3,603	41	(907)	2,737
Operating Income	2	900	1	—	903
Equity Earnings in Subsidiaries	574	(3)	—	(571)	—
Other Income	—	9	—	(8)	1
Other Deductions	—	—	—	(1)	(1)
Interest Expense	(180)	(69)	118	9	(122)
Income Taxes	72	(343)	(42)	—	(313)
Net Income (Loss)	$ 468	$ 494	$ 77	$ (571)	$ 468
For the Year Ended December 31, 2002:					
Net Cash Provided By (Used In) Operating Activities	$ (182)	$ 738	$ 298	$ (437)	$ 417
Net Cash Provided By (Used In) Investing Activities	$ (695)	$ (1,051)	$ (625)	$ 1,072	$(1,299)
Net Cash Provided By (Used In) Financing Activities	$ 877	$ 332	$ 328	$ (638)	$ 899

Note 25. Merger Agreement

On December 20, 2004, PSEG and Exelon Corporation (Exelon), a public utility holding company registered under PUHCA which is headquartered in Chicago, Illinois, entered into an agreement and plan of merger (the Merger Agreement) whereby PSEG will be merged with and into Exelon (the Merger). Under the Merger Agreement, each share of PSEG common stock will be converted into 1.225 shares of Exelon common stock.

The Merger Agreement contains certain termination rights for both PSEG and Exelon, and further provides that, upon termination of the Merger Agreement under specified circumstances, (1) Exelon may be required to pay PSEG a termination fee of $400 million plus PSEG's transaction expenses up to $40 million and (2) PSEG may be required to pay Exelon a termination fee of $400 million plus Exelon's transaction expenses up to $40 million.

The Merger Agreement has been unanimously approved by both companies' boards of directors but is contingent upon, among other things, the approval by shareholders of both companies, antitrust clearance and a number of regulatory approvals or reviews by federal and state energy authorities. The

parties have made some of the regulatory filings to obtain necessary regulatory approvals. It is anticipated that this approval process will be completed and the Merger will close within 12 months to 15 months after the announcement of the Merger Agreement in December 2004. Concurrent with the Merger Agreement, PSEG adopted the Key Executive Severance Plan of PSEG (Severance Plan) and adopted the Retention Program for Key Employees of PSEG (Retention Program).

Severance Plan

The Severance Plan provides change in control severance benefits to certain elected officers of PSEG whose employment is terminated without "cause" or who resign their employment for "good reason" within two years after a change in control, which would include the consummation of the Merger. Under the Severance Plan, the majority of the participants, if they are terminated without "cause" or resign his or her employment for "good reason" within two years after a change in control, will receive (1) a pro rata bonus based on the participant's target annual incentive compensation, (2) two times the sum of the participant's salary and target incentive bonus, (3) accelerated vesting of equity-based awards, (4) a lump sum payment equal to the actuarial equivalent of the participant's benefits under all of PSEG's retirement plans in which the participant participates calculated as though the participant remained employed for two years beyond the date his or her employment terminates less the actuarial equivalent of such benefits on the date his or her employment terminates, (5) two years continued welfare benefits (the first 18 months of which will be provided through PSEG-paid COBRA continuation coverage), (6) one year of PSEG-paid outplacement

services and (7) vesting of any compensation previously deferred. Under the Severance Plan, one participant will receive the same benefits as the other participants, except that the applicable multiplier for salary and target incentive bonus, retirement plan accruals and continuation of welfare benefits is three years instead of two.

Retention Program

The Retention Program, effective as of December 20, 2004, provides for payments to be made to certain key employees of PSEG who remain employed from the date of execution of the Merger Agreement through the date that is 90 days after the consummation of the Merger. The amount of a participant's retention payment may not be less than 40% or more than 150% of the participant's annual base salary. Retention payments under the Retention Program may not exceed $10 million in the aggregate.

PSEG will pay the first installment, equal to half of a participant's total retention payment, within 60 days after the first anniversary of the date of execution of the Merger Agreement. PSEG will pay the participant's remaining retention payment on the business day following the date that is 90 days after the consummation of the Merger. No participant whose employment terminates for any reason other than involuntary termination without "cause" will receive any subsequent installment of the retention payment. A participant whose employment is terminated without "cause" on or prior to the consummation of the Merger will be treated as if he or she remained employed through the date that is 90 days after the consummation of the Merger for all purposes under the Retention Program.

PART III

ITEM 10. DIRECTORS AND EXECUTIVE OFFICERS OF THE REGISTRANTS

Executive Officers

The Executive Officers of each of PSEG, PSE&G, Power and Energy Holdings, respectively, are set forth below, as indicated for each individual.

Name	Age as of December 31, 2004	Office	Effective Date First Elected to Present Position
E. James Ferland (1)(2)(3)(4)	62	Chairman of the Board, President and Chief Executive Officer (PSEG)	July 1986 to present
		Chairman of the Board and Chief Executive Officer (PSE&G)	July 1986 to present
		Chairman of the Board and Chief Executive Officer (Energy Holdings)	June 1989 to present
		Chairman of the Board and Chief Executive Officer (Power)	June 1999 to present
		Chairman of the Board and Chief Executive Officer (Services)	November 1999 to present
Thomas M. O'Flynn(1)(3)(4)	44	Executive Vice President and Chief Financial Officer (PSEG)	July 2001 to present
		Executive Vice President—Finance (Services)	July 2001 to present
		Executive Vice President and Chief Financial Officer (Energy Holdings)	August 2002 to present
		Executive Vice President and Chief Financial Officer (Power)	February 2002 to present
		Managing Director—Global Power and Utility Investment Banking Division Group (Morgan Stanley)	December 1997 to May 2001
Robert J. Dougherty, Jr.(1)(4)	53	President and Chief Operating Officer (Energy Holdings)	January 1997 to present
		Vice President (PSEG)	March 1995 to present
		President (Global)	August 2003 to present
Ralph Izzo(1)(2)	47	President and Chief Operating Officer (PSE&G)	October 2003 to present
		Vice President—Utility Operations (PSE&G)	June 2002 to October 2003
		Vice President—Special Projects (Services)	September 2001 to June 2002
		Vice President—Appliance Service (PSE&G)	April 2000 to September 2001
		Vice President—Corporate Planning (PSEG)	March 1998 to

			April 2000
R. Edwin Selover (1)(2)	59	Senior Vice President and General Counsel (PSEG)	April 2002 to present
		Vice President and General Counsel (PSEG)	April 1988 to April 2002
		Senior Vice President and General Counsel (PSE&G)	January 1988 to present
		Senior Vice President and General Counsel (Services)	November 1999 to present
Patricia A. Rado(1) (2)(3)(4)	62	Vice President and Controller (PSEG)	April 1993 to present
		Vice President and Controller (PSE&G)	April 1993 to present
		Vice President and Controller (Power)	June 1999 to present
		Vice President and Controller (Energy Holdings)	April 2004 to present
		Vice President and Controller (Services)	November 1999 to present
Robert E. Busch(1) (2)	58	President & Chief Operating Officer (Services)	April 2001 to present
		Senior Vice President-Finance and Chief Financial Officer (Services)	November 1999 to April 2001
		Senior Vice President and Chief Financial Officer (PSE&G)	June 1998 to present

920980693

Name	Age as of December 31, 2004	Office	Effective Date First Elected to Present Position
Harold W. Borden Jr.(3)	60	Vice President and General Counsel (Power)	June 1999 to present
		Vice President—Law (PSE&G)	April 1995 to July 1999
Morton A. Plawner (3)	57	Treasurer (PSEG)	April 1998 to present
		Vice President and Treasurer (PSE&G)	April 1998 to present
		Vice President and Treasurer (Power)	June 1999 to present
Frank Cassidy(1)(3)	58	President and Chief Operating Officer (Power)	June 1999 to present
		President (Energy Technologies)	November 1996 to June 1999
Steven R. Teitelman(3)	58	President (ER&T)	June 1999 to present
		Vice President—Energy Resources and Trading (PSE&G)	August 1997 to August 2002
Michael J. Thomson(3)	46	President (Fossil)	August 2003 to present
		President (Global)	January 1997 to July 2003
Eileen A. Moran(4)	50	President (Resources)	May 1990 to present
		President (EGDC)	January 1997 to present
Miriam E. Gilligan (4)	53	Vice President—Finance and Treasurer (Energy Holdings)	December 2001 to present
		Vice President (Services)	December 2001 to present
		Treasurer (Energy Holdings)	1997 to December 2001

(1) Executive Officer of PSEG

(2) Executive Officer of PSE&G

(3) Executive Officer of Power

(4) Executive Officer of Energy Holdings

Directors

PSEG

The information required by Item 10 of Form 10-K with respect to (i) present directors of PSEG who are nominees for election as directors at PSEG's 2005 Annual Meeting of Stockholders, and directors whose terms will continue beyond the meeting, and (ii) compliance with Section 16(a) of the Securities Exchange Act of 1934, as amended, is set forth under the headings "Election of Directors" and Section

920980694

S-4 1 a2150749zs-4.htm S-4
QuickLinks -- Click here to rapidly navigate through this document

As filed with the Securities and Exchange Commission on February 10, 2005

Registration No. 333-

SECURITIES AND EXCHANGE COMMISSION

Washington, D.C. 20549

Form S-4

REGISTRATION STATEMENT UNDER THE SECURITIES ACT OF 1933

Exelon Corporation

(Exact name of registrant as specified in its charter)

Pennsylvania	4931	23-2990190
(State or other jurisdiction of incorporation or organization)	*(Primary Standard Industrial Classification Code Number)*	*(I.R.S. Employer Identification Number)*

10 South Dearborn Street
37th Floor
Chicago, Illinois 60680-5379
(312) 394-7398
(Address, including zip code, and telephone number, including area code, of registrant's principal executive offices)

Randall E. Mehrberg, Esq.
Exelon Corporation
10 South Dearborn Street
37th Floor
Chicago, Illinois 60680-5379
(312) 394-7398
(Name, address, including zip code, and telephone number, including area code, of agent for service)

BCA000130

Copies To:

Thomas A. Cole, Esq. Carol M. Lind, Esq. Sidley Austin Brown & Wood LLP Bank One Plaza 10 South Dearborn Street Chicago, Illinois 60603 (312) 853-7000	R. Edwin Selover, Esq. Public Service Enterprise Group Incorporated 80 Park Plaza P.O. Box 1171 Newark, New Jersey 07101-1171 (973) 430-7000	David P. Falck, Esq. Pillsbury Winthrop LLP 1540 Broadway New York, New York 10036 (212) 858-1000

Approximate date of commencement of proposed sale of the securities to the public: As soon as practicable after this registration statement becomes effective and after the conditions to the completion of the proposed transaction described in the joint proxy statement/prospectus have been satisfied or waived.

If the securities being registered on this form are being offered in connection with the formation of a holding company and there is compliance with General Instruction G, check the following box. ☐

The Information in this joint proxy statement/prospectus is not complete and may be changed. These securities may not be sold until the registration statement filed with the Securities and Exchange Commission is effective. This preliminary joint proxy statement/prospectus is not an offer to sell and it is not soliciting an offer to buy these securities in any jurisdiction where the offer or sale is not permitted.

PRELIMINARY COPY—SUBJECT TO COMPLETION, DATED FEBRUARY 10, 2005

Exelon. PSEG

MERGER PROPOSAL—YOUR VOTE IS IMPORTANT

On behalf of the boards of directors and management of both Exelon Corporation and Public Service Enterprise Group Incorporated, we are pleased to deliver our joint proxy statement/prospectus for the merger involving Exelon and PSEG. We believe this merger will create a strong combined company that will deliver important benefits to our shareholders, to our customers and to the communities we serve.

If the merger is completed, PSEG shareholders will receive 1.225 shares of Exelon common stock for each share of PSEG common stock held. The exchange ratio is fixed and will not be adjusted to reflect stock price changes prior to the completion of the merger. Based on the closing price of Exelon common stock on the New York Stock Exchange on December 15, 2004, the last full trading day prior to a significant increase in trading volume from the average trading volume of Exelon and PSEG common stock and inquiries from *The Wall Street Journal* regarding whether Exelon and PSEG were in advanced merger discussions, the exchange ratio represented approximately $53.14 in value for each share of PSEG common stock. Based on the closing price of Exelon common stock on the New York Stock Exchange on December 16, 2004, the last full trading day prior to the publication of news articles reporting that Exelon and PSEG were in advanced merger discussions, the exchange ratio represented approximately $52.19 in value for each share of PSEG common stock. Based on the closing price of Exelon common stock on the New York Stock Exchange on December 17, 2004, the last full trading day prior to our public announcement of the merger, the exchange ratio represented approximately $51.28 in value for each share of PSEG common stock. Based on the closing price of Exelon common stock on the New York Stock Exchange on [•], 2005, of $[•], the exchange ratio represented approximately $[•] in value for each share of PSEG common stock. **The value of the consideration to be received by PSEG shareholders will fluctuate with changes in the price of Exelon common stock. We urge you to obtain current market quotations for Exelon and PSEG common stock.**

Exelon shareholders will continue to own their existing Exelon shares. We estimate that Exelon may issue up to approximately [•] million shares of Exelon common stock to PSEG shareholders as contemplated by the merger agreement, which includes approximately [•] million shares of Exelon common stock issuable pursuant to PSEG stock options to be assumed by Exelon and substituted with options to purchase Exelon common stock. Upon completion of the merger, Exelon's shareholders immediately prior to the merger will own approximately [•]% of Exelon's outstanding shares on a fully diluted basis and former PSEG shareholders will own approximately [•]% of Exelon's outstanding common stock on a fully diluted basis. Upon completion of the merger, Exelon will change its name from Exelon Corporation to Exelon Electric & Gas Corporation. Exelon common stock will continue to be listed on the New York Stock Exchange.

For a discussion of the United States federal income tax consequences of the merger, see "The Merger—Material United States Federal Income Tax Consequences of the Merger" beginning on page [•] of this joint proxy statement/prospectus.

We urge you to read this joint proxy statement/prospectus, which includes important information about the merger and our annual meetings. **In particular, see the section titled "Risk Factors" on pages [•] through [•] of this joint proxy statement/prospectus which contains a description of the risks that you should consider in evaluating the merger.**

Exelon asks that, in addition to the other matters to be considered at the Exelon annual meeting, Exelon shareholders approve the issuance of shares of Exelon common stock as contemplated by the merger agreement. Exelon's annual meeting will be held at the following time and place:

[•], 2005
[•] local time
[Location TBD]

Exelon's board of directors has reviewed and considered the terms of the merger and the merger agreement and has unanimously determined that the merger, including the issuance of shares of Exelon common stock as contemplated by the merger agreement, is advisable, fair to and in the best interests of Exelon and its shareholders and unanimously recommends that Exelon shareholders vote FOR the proposal to approve the issuance of shares of Exelon common stock as contemplated by the merger agreement.

PSEG asks that, in addition to the other matters to be considered at the PSEG annual meeting, PSEG shareholders approve the merger agreement and thereby approve the merger. PSEG's annual meeting will be held at the following time and place:

[•], 2005
[•] local time
[Location TBD]

PSEG's board of directors has reviewed and considered the terms of the merger and the merger agreement and has unanimously determined that the merger is advisable, fair to and in the best interests of PSEG and its shareholders and unanimously recommends that PSEG shareholders vote FOR the proposal to approve the merger agreement and thereby approve the merger.

We cannot complete the merger unless the Exelon shareholders approve the issuance of shares of Exelon common stock as contemplated by the merger agreement and the PSEG shareholders approve the merger agreement. Your vote is important.

John W. Rowe
Chairman of the Board,
President and Chief Executive Officer
Exelon Corporation

E. James Ferland
Chairman of the Board,
President and Chief Executive Officer
Public Service Enterprise Group Incorporated

Neither the Securities and Exchange Commission nor any state securities commission has approved or disapproved the securities to be issued under this joint proxy statement/prospectus or determined if this joint proxy statement/prospectus is accurate or adequate. Any representation to the contrary is a criminal offense.

This joint proxy statement/prospectus is dated [•], 2005 and is first being mailed to Exelon and PSEG shareholders on or about [•], 2005.

IRS Private Letter Ruling Regarding Nuclear Decommissioning Trust Funds

United States Treasury regulations generally provide for the nonrecognition of gain or loss for United States federal income tax purposes with respect to the transfer of certain decommissioning trust funds maintained by nuclear power plant owners in connection with the transfer of an interest in a nuclear power plant. The precise application of these Treasury Regulations in the context of the merger, however, is not free from doubt. Therefore, Exelon and PSEG have agreed to seek a ruling from the IRS confirming that no gain or loss will be recognized for United States federal income tax purposes with respect to the transfer of PSEG's decommissioning trust funds as a result of the merger.

Corporate Restructuring

Subject to receipt of necessary regulatory approvals, Exelon and PSEG intend to pursue a restructuring of their corporate organizations after completion of the merger. In general, this restructuring will involve:

- PSE&G becoming a direct subsidiary of Exelon Energy Delivery, LLC; thereafter, PECO, ComEd and PSE&G will be separate indirect subsidiaries of Exelon and will continue to be regulated public utilities;
- Combining PSEG Power and Exelon Generation into one entity and combining certain of PSEG Power's subsidiaries with that combined entity; and
- PSEG Services selling its assets to Exelon Services, with Exelon Services providing central services to the combined company and its subsidiaries.

By virtue of the merger, PSEG Energy Holdings will become a direct subsidiary of the combined company.

The companies may modify these restructuring plans to adapt to changing regulatory and competitive conditions. Completion of the merger is not conditioned on the consummation of, or receipt of regulatory approval for, any portion of these corporate restructuring plans.

Appraisal Rights

Neither Exelon nor PSEG shareholders are entitled to appraisal rights in connection with the merger under the Pennsylvania Business Corporation Law or the New Jersey Business Corporation Act, respectively.

Federal Securities Laws Consequences; Stock Transfer Restriction Agreements

All shares of Exelon common stock received by PSEG shareholders pursuant to the merger will be freely transferable, except that shares of Exelon common stock received by persons who are deemed to be "affiliates" of PSEG under the Securities Act of 1933, as amended, at the time of the PSEG annual meeting may be resold by them only in transactions permitted by Rule 145 under the Securities Act of 1933 or as otherwise permitted under the Securities Act of 1933, as amended. Persons who may be deemed to be affiliates of PSEG for such purposes generally include individuals or entities that control, are controlled by or are under common control with, PSEG, as the case may be, and include directors and certain executive officers of PSEG. The merger agreement requires that PSEG use reasonable best efforts to cause each affiliate to execute a written agreement to the effect that such persons will not offer, sell or otherwise dispose of any of the shares of Exelon common stock issued to them pursuant to the merger in violation of the Securities Act of 1933, as amended, or the related SEC rules and regulations promulgated thereunder.

The registration statement of which this joint proxy statement/prospectus is a part does not cover any resales of the Exelon common stock to be received by the shareholders of PSEG upon completion

920980698

THE JERSEY CITY SEWERAGE AUTHORITY
JERSEY CITY, NEW JERSEY

DRAFT
COMBINED SEWER OVERFLOW DISCHARGE CHARACTERIZATION STUDY

PART B - SERVICE AREA DRAINAGE AND LAND USE REPORT

JULY 1996
Project: 1129-125

BAB000001

MALCOLM PIRNIE, INC.

One International Boulevard
Mahwah, NJ 07495-0018

104 Corporate Park Drive
P.O. Box 751
White Plains, NY 10602

920980700

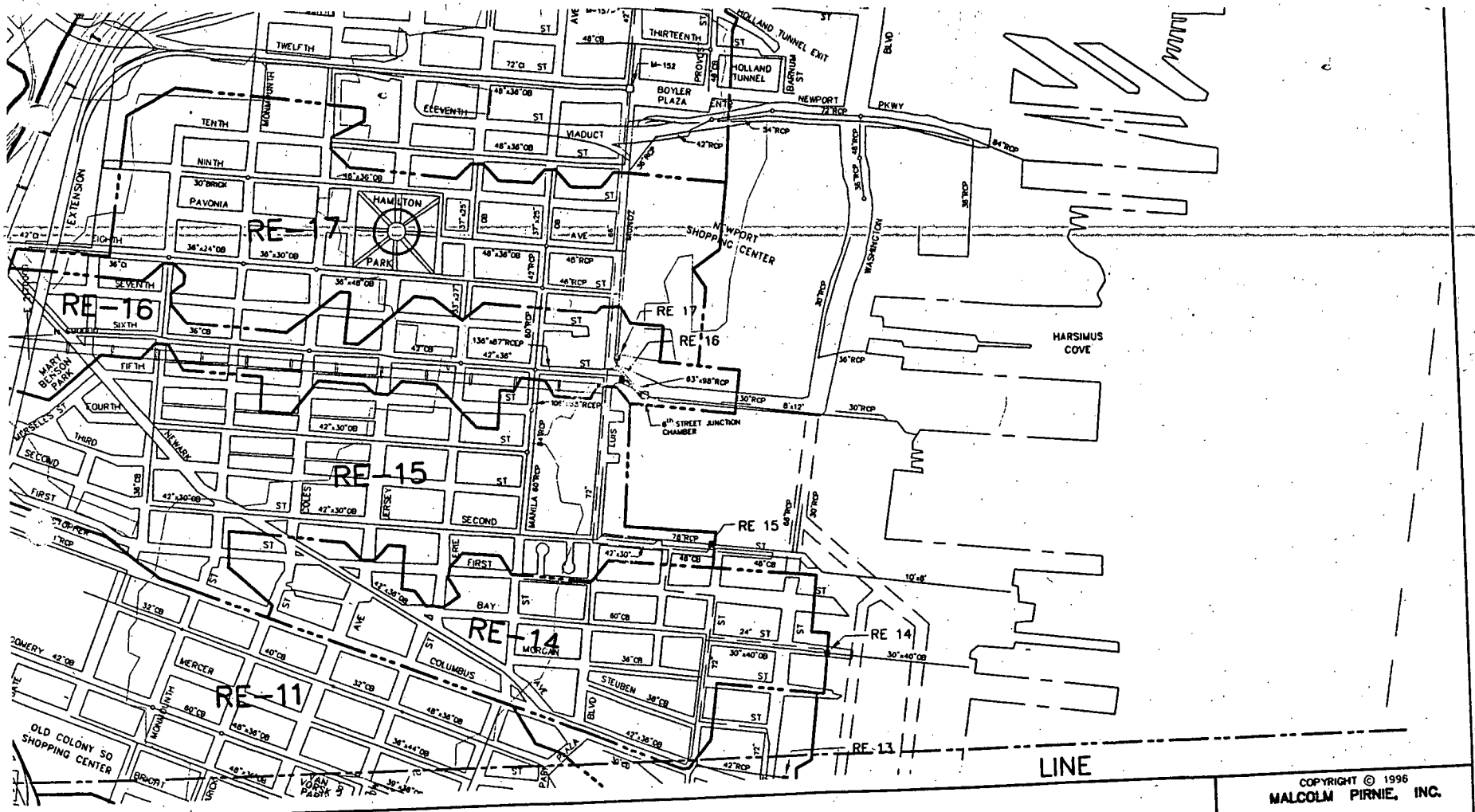

MAP OF JERSEY CITY – MAJOR SEWER SYSTEM COMPONENTS AND TOPOGRAPHY

SCALE: APPROX. 1"=600'

COPYRIGHT © 1996
MALCOLM PIRNIE, INC.

DATE JUNE 1996

C/S SHEET 1 OF 2

CAD REF. NO.

Source Figure 1

920980701

RW 2
RW-2
RW-3
RW-4
RW-5
RE-19
RE 19
RW 3
RW 4
RW5-1
RIVER
ST. PETERS CEMETERY
RESERVOIR NO. 2
RESERVOIR NO. 3
PERSHING FIELD (CITY PARK)
PERSHING PLAZA
KEARNY
JERSEY CITY
ROUTE No
US HIGHWAY
MANHATTAN
BEACH
CARLTON
LAKE
CLIFF
STAGG
SPRUCE
LLOYD
ELM
KENNEDY
COLLARD
LAIDLAW
HOPKINS
BEACON
ST PAULS
HOWELL
DUFFIELD
VAN KEUREN
MEADOW
LEWIS
WEST SIDE
COVERT ST
LARCH
VAN WINKLE
DEY
BERKELEY PL
SKILLMAN
HURON AVE
NEWARK
COTTAGE
HOBOKEN
BROADWAY
MARION PL
PAVONIA
LOGAN
DALES
WALLS
WRIGHT
WALES
GILES
FOX PL
HOWELL ST
VAN WINKLE
LINCOLN
TERRACE
COLUMBIA
HUTTON ST
ZABRISKIE
SANFORD
SHERMAN
PLACE
TROY
MONTROSE
FRANKLIN
CAMBRIDGE
RANCOCK
MANHATTAN AVE
FERRY
BOOREAM
RAVINE
PROSPECT
CENTRAL
WAVERLY
JEFFERSON
LAIDLAW
BEACON
HOPKINS
SOUTH
THORNE
CHARLES
BOWERS
LINCOLN
GRIFFITH
MILTON
CENTRAL
BOWERS
GRIFFITH
HUTTON
PAUSADE
OGDEN AVE
SEVENTEENTH
CARROL AVE
QUINCY ST
WALLER
ANN PL
RESERVE AVE
ALLEN ST
LINCOLN
PIERCE
PASSAIC
CAMBRIDGE
SOUTH
HARRISON
MOUNTAIN
PROSPECT ST
WEBSTER
RESERVOIR
RESERVOIR
NEWARK
LIBERTY
HERBERT PL
BRYANT
WHITTIER
FREEMAN AVE
LAFAYETTE
MEAD
6

920980702