A. Bellina, Chief, New York Permit Section, EPA Region II

PRIDE SOLVENTS & CHEMICALS CO.,INC

EPA.I.D.No:NYD057722258
UPA NUMBER:NY.I.D.No:1-4720-0029/00002-0

6NYCRR Part 373
HAZARDOUS WASTE MANAGEMENT PERMIT

VOLUME II

2 N 4

657625

Attachment II

F. PROCEDURES TO PREVENT HAZARDS

This section describes the security measures, inspection procedures and emergency response equipment utilized by Pride Solvents to ensure the safe operation of its waste storage and reclamation facility.

The information presented in this section is submitted in accordance with the requirements of 6 NYCRR 373-1.5(iv) and (v).

F-1. SECURITY

F-1a. SECURITY PROCEDURES AND EQUIPMENT

To provide plant personnel immediate warning in case of an emergency, paging telephones, linked to the plant's public address system are located throughout the facility. These telephones have outside lines and can also be used to notify emergency response personnel. Hand-held two-way radios are used whenever plant personnel are working alone or outside the facility, away from a telephone. The outdoor areas of the facility are illuminated with sodium vapor area lights.

F-1b. BARRIER

The Pride Solvents facility site is bordered on the north, east and west sides by a six foot tall barbed wire topped, chain link security fence. The reclamation building (78 Lamar Street) serves as a barrier on the south side. The fence has two locking gates; one located between the waste reclamation building and the

chemical distribution building (88 Lamar Street), and the other located just north of the chemical distribution facility. The only unfenced area at the facility site is an employees parking lot located on the south side of the reclamation building.

F-1c. MEANS TO CONTROL ENTRY

Pride Solvents reclamation facility contains several points of entry. Doors on the south side of the facility are locked and are used as emergency exits only. A roll-up type door on the north side of the facility opens out to a fenced-in portion of the facility site. On the east side of the facility, the main entrance is attended by a receptionist and is equipped with a locked buzzer type entry. Visitors are prohibited from entry without being accompanied by plant personnel.

To prevent unauthorized entry after working hours, all entrance gates and doors are locked and the fenced-in facility site is patrolled by guard dogs.

F-1d. WARNING SIGNS

Warning signs, bearing the legend "DANGER -- UNAUTHORIZED PERSONNEL KEEP OUT", are posted along the east and west security fence and along the south side of the reclamation building. See Drawing PRID 84-01-2, Facility Site Plan. All warning signs have lettering which is legible from a distance of 25 feet.

F-2. INSPECTIONS

F-2a. GENERAL INSPECTION REQUIREMENTS

Pride Solvents performs routine daily and weekly inspections of the facility to ensure personnel safety. The inspections include, but are not limited to, drums, tanks, containment facilities, process and safety equipment. Daily and weekly inspection logs are used as an inspection checklist and are signed by the personnel performing the inspections. An inventory of the waste on-hand is recorded in the inspection logs on a weekly basis. Inspection logs are filed and maintained for a period of not less than three (3) years from the inspection date. Sample copies of the daily and weekly inspection logs are included in Appendix D.

F-2b. TYPES OF PROBLEMS

Pride Solvents inspects its waste storage and reclamation equipment routinely for safety related problems. The drum storage area and process tanks are inspected daily for leaks and spills. Mechanical equipment is inspected for operational problems on a daily and weekly basis.

Drums containing waste solvents awaiting reclamation are inspected for leaks, spills and general drum condition. An inventory of the drums in storage is performed once a week. The spill containment area is inspected for cracks, spalling, coating deterioration and evidence of spills or leaks.

In the reclamation area, tanks and piping systems are inspected for leaks and deterioration. Pumps, valves, level controls and alarms and inspected for general operating conditions. As in the drum storage area, the spill containment provisions are checked for cracks, spalling, coating deterioration and evidence of spills or leaks.

Emergency response equipment such as telephones and fire extinguishers are inspected for general operation. Inspections also include an assessment of spare drums and absorbent material inventories. Security measures, such as door locks, fences and gates are inspected for general working order.

A summary of the items requiring inspection and inspection frequency is presented in Table F-1, Inspection Schedule.

F-2c. FREQUENCY OF INSPECTION

Depending upon the specific equipment or systems, inspections are performed on a daily and weekly basis. Drum storage, tanks, piping and valves, telephones and security systems are inspected daily. Process equipment, spill containment systems and emergency response equipment (e.g., fire extinguishers) are inspected on a weekly basis (see Table F-1, Inspection Schedule).

F-2d. REMEDIAL ACTION

Pride Solvents will correct, repair or replace any equipment which has deteriorated or failed, as noted during routine inspections, in an expeditious manner. Conditions which pose an

imminent hazard will be remedied immediately. All corrections, repairs or equipment replacement shall be noted on subsequent inspection logs. Inspection reports indicating operational or safety hazards are submitted to the reclamation manager to ensure that the appropriate corrective and/or remedial actions are taken.

F-2e. INSPECTION LOGS

Pride Solvents uses daily and weekly inspection logs to record facility inspection results. Sample inspection logs are provided in Appendix D. Inspection logs are filed and maintained for a period of not less than three (3) years from the inspection date.

F-3. PREPAREDNESS AND PREVENTION

So as to prevent the possibility of any unplanned, sudden or non-sudden release of hazardous waste to the environment, the Pride Solvents facility was specially modified to provide secondary containment. The containment, in the form of berms, is designed to prevent any spills or leaks from being discharged from within the plant. Secondary containment, designed and constructed in conformance with Article XII of the Suffolk County Sanitary Code, is provided in both the drum storage and reclamation areas. Additional provisions, such as overfill alarms on process tanks, further minimize the possibility of an uncontrolled release of hazardous waste.

F-3a. REQUIRED EQUIPMENT

To provide plant personnel immediate warning in case of an emergency, paging telephones linked to the plant's public address system are located throughout the facility. These telephones have outside lines and can also be used to notify emergency equipment and personnel. Hand-held two-way radios are used whenever plant personnel are working alone or outside the facility away from a telephone.

Although the spent solvents handled by Pride Solvents are non-flammable and non-ignitable, wall mounted 10 pound ABC dry chemical fire extinguishers have been provided in the laboratory, outside the boiler room and in the front office.

All of the chemicals handled by Pride Solvents are organic solvents and water may be ineffective in fire fighting. Neither of the two plant buildings are equipped with sprinkler systems. There is a fire hydrant at the foot of Pride Solvents' driveway on Lamar Street. This hydrant is rated for a minimum working pressure of 20 psi.

An adequate supply of absorbent material is maintained at Pride Solvents to control minor spills and leaks. Portable pumps are available to transfer materials from the containment area to drums or process tanks in the event of a major spill.

F-3b. LOADING AND UNLOADING OPERATIONS

Waste solvents are received exclusively in 55-gallon drum shipments. The drums are unloaded by forklifts equipped with drum pickers in the open area between the two facility buildings

(78 and 88 Lamar Street) and moved immediately into the reclamation building (78 Lamar Street). Adequate aisle space between the palletized drums is provided to allow unobstructed movement of personnel and equipment.

F-3c. RUNOFF

Because Pride Solvents drum storage and waste reclamation areas are housed indoors, special requirements addressing stormwater runoff are not necessary. Spills and leaks within the building are controlled by spill containment provisions.

Stormwater runoff from the open area between the two buildings is directed to on-site stormwater dry wells. The potential for hazardous wastes entering the dry wells is minimized by transferring the wastes indoors immediately upon receipt.

F-3d. WATER SUPPLY

Groundwater is the sole source of drinking water in Suffolk County. Groundwater contamination is prevented by spill containment provisions in both the drum storage and waste reclamation areas of the Pride Solvents facility. Spill containment provisions are consistent with the requirements of the Suffolk County Sanitary Code, Article XII, Toxic and Hazardous Materials Storage and Handling Controls.

F-3e. EQUIPMENT AND POWER FAILURE

In the event of a power failure, all process equipment is shut down. To ensure safe resumption of operations, all process

equipment is inspected prior to start-up. Because the spill containment provisions are not power dependent, no special spill control measures during power failure are necessary. The drum storage and reclamation areas are equipped with D.C. powered emergency lights.

F-3f. PERSONNEL PROTECTION

All Pride Solvents personnel involved in hazardous waste activities have undergone a thorough on-the-job training program to familiarize themselves with the hazards associated with the waste solvents, safety procedures and remedial actions.

Ventilation of the drum storage and reclamation area is provided by roof mounted fans. Protective clothing for use during normal operations and emergency conditions include safety goggles, hard hats, protective gloves and mask respirators. An emergency shower is located in the reclamation area.

F-4. MANAGEMENT OF IGNITABLE, REACTIVE AND INCOMPATIBLE WASTES

Because Pride Solvents' hazardous waste activities do not involve ignitable, reactive or incompatible wastes, no special requirements are necessary.

APPENDIX D

SAMPLE INSPECTION LOGS

PRIDE SOLVENTS AND CHEMICAL CO. INC.

DAILY INSPECTION LOG

ITEM	INSPECTION	ACCEPT-ABLE	NOT ACCEPT-ABLE	COMMENTS
1) Drum Storage	Leaks, Spills, Deterioration			
2) Tanks	Leaks, Spills, Level Gauges, Operating Level, General Condition			
3) Piping & Valves	General Operation, Leaks			
4) Distillation, Automatic Feed	General Operation			
5) Communications	General Operation			
6) Door & Gate Locks	General Operation			

SIGNATURE _____ DATE _____

PRIDE SOLVENTS AND CHEMICAL CO. INC.

WEEKLY INSPECTION LOG

ITEM	INSPECTION	ACCEPT-ABLE	NOT ACCEPT-ABLE	COMMENTS
1) Containment Berms	Cracks, General Condition			
2) Storage Tanks Overfill Sensors	General Operation			
3) Settling Tank Pump	General Operation, Leaking Seals			
4) Storage Tanks Pump	General Operation, Leaking Seals			
5) Distillation Feed Pump	General Operation, Leaking Seals			
6) Dryer Feed Pump	General Operation, Leaking Seals			
7) Product Storage Feed Pump	General Operation, Leaking Seals			
8) Boiler Feedwater Pump	General Operation, Leaking Seals			
9) Boiler Fuel Pump	General Operation, Leaking Seals			
10) Condenser Pump	General Operation, Leaking Seals			
11) Cooling Water Pump	General Operation, Leaking Seals			
12) Distillation Unit	General Operation			
13) Dryer	General Operation			
14) Fire Extinguishers	Working Pressure			

SIGNATURE _____ DATE _____

HOLZMACHER, McLENDON & MURRELL, P.C.

SHELL THICKNESS INSPECTION LOG

PRIDE SOLVENTS & CHEMICAL CO., INC.

Side Shell Thickness

	1	2	3	4	5	6	7	8	9	10	11	12	Top	Bottom
Settling Tank (650 Gals)														
Feed Tank #1 (1,500 Gals)														
Feed Tank #2 (1,500 Gals)														
Feed Tank #3 (500 Gals)														
Distillation Tank (600 Gals)														
Distillate Storage Tank #1 (2,000 Gals)														
Distillate Storage Tank #2 (500 Gals)														
Distillate Storage Tank #3 (275 Gals)														

Signature:_____ Date:_____ Time:_____

TABLE F-1

INSPECTION SCHEDULE

Area/Subject	Item	Inspection Frequency	Types of Problems	Remedial/Corrective Action
Loading/Unloading Area	General Area	Daily	Spills, Leaks	Spill Cleanup
	Pavement	Weekly	Cracks, Spalling	Patch and repair as necessary.
	Ramps	Weekly	Cracks, Spalling	Patch and repair as necessary.
	Warning Signs	Weekly	Damaged, Illegible	Replace signs.
Drum Storage Area	Drums	Daily	Leaks, General Condition	Transfer to secure drum.
	Drum Placement	Daily	Aisle Space	Relocate drums to provide adequate aisle space.
			Stacking	Relocate drums to limit stacking to two drums high.
	Drum Labeling	Daily	Improper/Incorrect Labeling	Correct labels as necessary.
	Drum Sealing	Daily	Open Drums	Seal drums as necessary.
	Pallets	Weekly	Damaged Pallets	Replace pallets as necessary.
	Floor	Weekly	Cracks, Spalling Coating Deterioration	Patch and/or repair as necessary. Recoat as necessary.
	Berms	Weekly	Cracks, Spalling, Damage Coating Deterioration	Patch and/or repair as necessary. Recoat as necessary.
	Ramps	Weekly	Cracks, Spalling, Damage Coating Deterioration	Patch and/or repair as necessary. Recoat as necessary.
	Warning Signs	Weekly	Damaged, Illegible	Replace signs.
Security	Door Locks	Daily	Lock Malfunction	Repair or replace locks.
	Fence	Weekly	Fence Damage	Repair or replace damaged fence section.
	Gates and Locks	Daily	Fence Damage Lock Malfunction	Repair or replace damaged gate/fence Repair or replace lock.

TABLE F-1 (CONT'D.)

Area/Subject	Item	Inspection Frequency	Types of Problems	Remedial/Corrective Action
Security (Continued)	Warning Signs	Weekly	Damaged, Illegible	Replace signs.
	Area Lighting	Weekly	Damage Light Bulb Malfunction	Repair damage as necessary. Replace light bulbs.
Emergency Response Equipment	Telephones	Daily	Phone Malfunction	Repair or replace as necessary.
	Paging System	Daily	System Malfunction	Repair system, replace paging horns as necessary.
	Protective Clothing	Daily	General Condition	Replace as necessary.
	Mask Respirators	Weekly	General Operation	Replace as necessary.
	Safety Shower	Weekly		
	Emergency Lighting	Weekly	Battery Failure Light Failure	Recharge or replace battery, repair or replace battery charger. Repair or replace light fixture, replace light bulb.
	Fire Extinguishers	Weekly	Inadequate Working Pressure	Recharge extinguishers.
	First Aid Equipment	Weekly	Inadequate Stock	Replenish first aid stock as necessary.
	Absorbent Material	Weekly	Inadequate Supply	Replenish stock as necessary.
	Portable Sump Pump	Weekly	General Operation	Repair or replace as necessary.
Reclamation Area	Process Tanks	Weekly	Corrosion, Cracks, Leaking Fittings	Repair or replace as necessary.
	Tank Level Sensors	Weekly	Sensor Malfunction	Repair or replace as necessary.
	Tank Level Alarms	Weekly	Alarm Malfunction	Repair or replace alarm relay and/or alarm horn.
	Transfer Pumps	Weekly	Leaking Seals Malfunction	Replace seals. Repair or replace pump.

TABLE F-1 (CONT'D.)

Area/Subject	Item	Inspection Frequency	Types of Problems	Remedial/Corrective Action
Reclamation Area (Continued)	Distillation System	Weekly	Leaks	Repair leaks, replace fittings as necessary.
			Malfunction	Repair or replace parts and components as necessary.
	Dryer System	Weekly	Leaks	Repair leaks, replace fittings as necessary.
			Resin Failure	Replace resin material as necessary.
	Piping	Daily	Leaks, Corrosion	Repair leaks, replace piping and fittings as necessary.
	Valves	Daily	Leaks, Malfunction	Repair or replace as necessary.
	Cooling Water System	Weekly	Leaks	Repair or replace pipes and fittings as necessary.
			Malfunction	Repair or replace recirculation pump as necessary.
	Steam System	Weekly	Boiler Failure	Repair boiler as necessary.
			Leaks, Corrosion	Repair or replace pipes and fittings as necessary.
	Floor	Weekly	Cracks, Spalling	Patch and/or repair as necessary
			Coating Deterioration	Recoat as necessary.
	Berms	Weekly	Cracks, Spalling, Damage	Patch and/or repair as necessary.
			Coating Deterioration	Recoat as necessary.
	Rampways	Weekly	Cracks, Spalling, Damage	Patch and/or repair as necessary.
			Coating Deterioration	Recoat as necessary.

Attachment III

H. PERSONNEL TRAINING

H. PERSONNEL TRAINING

This section describes Pride Solvents' training program for personnel involved in hazardous waste activities at the facility. The information presented in this section is submitted in accordance with 6 NYCRR 373-1.5(xii).

H-1. OUTLINE OF TRAINING PROGRAM

Facility personnel involved in the handling and reclamation of waste solvents are limited to the truck drivers, who receive and transport the waste, terminal workers, who handle the waste once its received at Pride Solvents, and operators in the reclamation area. All personnel in these positions have received the necessary training to enable them to perform their duties in a safe manner, and in conformance with the applicable Federal, State and Local regulations.

An outline of Pride Solvents' training program is as follows:

1.0 Chemical Hazards
- 1.1 Hazardous Waste Identification
- 1.2 Organic Solvents
- 1.3 Safety Precautions

2.0 Waste Transportation
- 2.1 DOT Regulations
- 2.2 Waste Manifests

3.0 Facility Operations
- 3.1 Drum Storage
- 3.2 Waste Reclamation

4.0 Waste Analyses

4.1 Sampling

4.2 Analytical Testing

5.0 Emergency Response

5.1 Contingency Plan

5.2 Emergency Procedures

5.3 Emergency Equipment

5.4 Remedial Actions

5.5 Notification

6.0 Recordkeeping and Reporting

6.1 Manifest System

6.2 Annual Reports

The following pamphlets prepared by the Transportation Skills Program are utilized by Pride Solvents in the training program:

- RCRA Training Manual
- 1981-82 Hazardous Materials, Substances and Wastes Pocket Commodity Compliance Guide
- Introduction to Hazardous Materials and Substances
- Everything You've Wanted to Know About CFR 40/49 and Have Been Afraid to Ask
- Hazardous Waste and the Driver
- Hazardous Materials and the Driver
- Classes of Hazardous Materials
- Hazardous Wastes Labels and Markings

- Hazardous Materials Shipping Papers
- Empties - Leakers and Emergency Responses

H-2. TRAINING DIRECTOR

Pride Solvents' personnel training program is directed by John Keogh, the facility's terminal manager. Mr. Keogh has been employed by Pride Solvents for 5 years, and has received training in all aspected of hazardous materials management through a number of privately sponsored and state-run seminars on the subject.

H-3. RELEVANCE OF TRAINING PROGRAM

Pride Solvents' training program is administered to the various personnel in accordance with their specific positions and duties with respect to hazardous waste management. Although all personnel involved in hazardous waste activities receive training in such areas as chemical hazards and emergency responses, training for waste analyses and waste transportation is limited to those personnel responsible for those functions. A list of plant personnel and their required training is presented in Table H-1, Personnel Training.

H-4. SPECIALIZED TRAINING

In addition to the training program at Pride Solvents, Bruce Brehm, the facility's reclamation manager, has received specialized training by the Hewlett-Packard Analytical Group in the operation of the gas chromatograph.

TABLE H-1

PERSONNEL TRAINING

PRIDE SOLVENTS & CHEMICAL CO., INC.

	Chemical Hazards	Waste Transportation	Facility Operations	Waste Analyses	Emergency Response	Recordkeeping and Reporting
Operations Manager	X	X	X	X	X	X
Reclamation Manager	X	X	X	X	X	X
Terminal Manager	X	X	X		X	X
Terminal Workers	X		X		X	
Truck Drivers	X	X	X	Sampling Only	X	Manifests Only

HOLZMACHER, McLENDON & MURRAY

H-5. IMPLEMENTATION OF TRAINING PROGRAM

All current personnel at Pride Solvents have received the necessary training as required. All new personnel will complete the training program during the first four weeks of employment. Until they have completed the training program, new employees will work under the supervision of fully trained plant personnel. Personnel who are promoted or otherwise placed in a new position will receive additional training as required to perform the duties associated with the new position within 6 months of placement.

Pride Solvents will conduct an annual review of the training program with all employees. The purpose of the annual review is threefold:

- To review new developments in Federal, State and/or Local regulations which impact the facility's operation and management.
- To update and train personnel in any new procedures or equipment and review existing operations problems.
- To review any incidents which called for implementation of the contingency plan or use of emergency equipment, assess the adequacy of the response or remediation, and identify measures to prevent and recurrence.

H-6. JOB TITLES AND DUTIES

Pride Solvents keeps records on the various personnel involved in the handling of spent solvents. These files include job assignments, job descriptions and qualifications as well as information concerning any formal or informal training the personnel has received. Typical job files are presented in Appendix I.

Pride Solvents will maintain these records on-site until the facility closure. Records on individual employees will be maintained until closure or 3 years after the employee's termination, whichever comes first.

APPENDIX I

SAMPLE JOB FILES

RCRA Job and Personell File

1. Title: Terminal Manager

   a. Background Requirements:

      1. Previous Industry experience (minimum three years)

      2. Experience gained in house while working in subordinate position.

2. Name: Keogh, John

   Date of Hire: 11-12-79
   Experience: Terminal Superintendant, Baron Blakeslee, Bay Shore, N.Y. 8/68 thru 9/78.
   Training:
   A. Transportation Skills Program, July 1981
   B. N.Y.S.D.E.C. Hazardous Waste Seminary, April 1982.
   C. J.J. Keller Hazardous Waste Course, March 1983.
   D. Continuing in house training.
   E. Periodic updates by Producers, Eq. Dow Chemical USA, E.I. Dupont, Shell Chemical Co.etc.
   F. On job experience training.

3. Job Duties:

   1. Day to day operations of Pride's Terminal.
   2. Responsibility for the incoming and outgoing shipments of products from the terminal.
   3. On job training of drivers and terminal personell.
   4. Oversees the acceptance or rejection of waste received at our site.
   5. Disseminates training aids and on the job training, Eq.:

      1. Emergency response guidebooks.
      2. Sample manifests
      3. Small generator exemption forms
      4. Transportation skills program training booklets.

J. J. Keller & Associates, Inc.

Hereby Certifies That

JOHN KEOGH

has satisfactorily completed training
in

THE SAFE TRANSPORTATION OF HAZARDOUS WASTE

AS REQUIRED BY MARYLAND AND NEW JERSEY

March 11, 1983
Date

East Brunswick, NJ
Location

K. A. Parker
Instructor

R. S. Krause
Program Manager

© GOES 445

THE TRANSPORTATION SKILLS PROGRAM

THE TRANSPORTATION SKILLS PROGRAM

This Certifies That JOHN J. KEOGH

Has Enrolled in and Completed The

Hazardous Wastes / Materials Management Compliance Seminar

and this Certificate represents a sincere effort on their company's behalf and on their own behalf to comply with the U. S. Department of Transportation Hazardous Materials Regulations, and the Environmental Protection Agency Hazardous Waste Regulations.

R. J. Keegan — Robert J. Keegan, President

Dan Cooper — Dr. Daniel Cooper, V. P. & Training Director

Pride Solvents & Chemical Co., Inc.

Hazardous Waste Training

Mr. Bruce Brehm Distillation Manager
4/29/82 Hazardous Waste Workshop N.Y.S.D.E.C.
5/4/82 Hazardous Waste Workshop N.Y.S.D.E.C.

John Keogh Terminal Manager
1/13/81 Hazardous Waste Materials Management Compliance Seminar
3/11/83 Hazardous Waste Transportation Seminar

Richard Fauvell Lead Man Warehouse
3/11/83 Hazardous Waste Handling & Transportation Seminar

Arthur Dhom Warehouse Man
3/11/83 Hazardous Waste Handling & Transportation Seminar

James Maybeck Driver trained by Pride Solvents & Chemical Co., Inc.
3/10/81 Hazardous Waste Handling & Transportation

Gerardo Alvarez Driver trained by Pride Solvents & Chemical Co., Inc.
1/5/81 Hazardous Waste Handling & Transportation

John O Bowers Driver trained by Pride Solvents & Chemical Co., Inc.
1/11/83 Hazardous Waste Handling & Transportation

Chris Gadue Warehouse Man trained by Pride Solvents & Chemical Co.,Inc.
4/29/82 Hazardous Waste Handling & Transportation

Training aids supplied to and used by all of the above:

Transportation Skills Program Inc.

(1) Empties leakers & emergency responses

(2) Introduction to hazardous materials & substances

(3) Hazardous Waste & the Driver

(4) Hazardous Materials & the Driver

(5) Hazardous Materials Labeling & Marking

(6) Emergency Phone Numbers

HEWLETT-PACKARD ANALYTICAL GROUP

IS PROUD TO PRESENT THIS

Certificate of Achievement

TO

BRUCE BREHM

FOR SUCCESSFUL COMPLETION OF

5840 OPERATOR TRAINING &
PRACTICE OF GAS CHROMATOGRAPHY

HELD AT

PRIDE SOLVENTS & CHEMICALS
WEST BABYLON, N.Y.

APRIL 14, MAY 26-27
DATE

Susan Strong
CUSTOMER TRAINING MANAGER

Attachment IV

CONTINGENCY PLAN

PRIDE SOLVENTS & CHEMICAL CO., INC.

WEST BABYLON, NEW YORK

SEPTEMBER 1986

EPA ID No. NYD057722258

CONTINGENCY PLAN

PRIDE SOLVENTS & CHEMICAL CO., INC.

TABLE OF CONTENTS

	PAGE NO.
1.0 FACILITY IDENTIFICATION AND GENERAL INFORMATION	1
1.1 SCOPE	1
1.2 GENERAL INFORMATION	2
1.3 INTRODUCTION	2
1.4 CURRENT OPERATIONS	4
1.5 PRODUCT RECLAMATION	4
1.6 SPILL CONTAINMENT PROVISIONS	12
2.0 EMERGENCY COORDINATORS	13
3.0 IMPLEMENTATION OF THE CONTINGENCY PLAN	14
4.0 EMERGENCY RESPONSE PROCEDURES	15
4.1 NOTIFICATION	15
4.2 CONTAINMENT AND CONTROL	17
4.3 FIRE OR EXPLOSION	17
4.4 SPILLS OR RELEASES	18
4.5 POST-EMERGENCY ACTIONS	20
5.0 EMERGENCY EQUIPMENT	21
5.1 COMMUNICATION SYSTEMS	21
5.2 FIRE CONTROL	24
5.3 PERSONNEL PROTECTION	24
5.4 SPILL CONTROL	25

TABLE OF CONTENTS (CONT'D.)

	PAGE NO.
6.0 COORDINATION AGREEMENTS	25
6.1 NEW YORK STATE DEPT. OF ENVIRONMENTAL CONSERVATION (NYSDEC)	25
6.2 SUFFOLK COUNTY DEPT. OF HEALTH SERVICES (SCDHS)	25
6.3 SUFFOLK COUNTY FIRE SAFETY DEPT. (SCFSD)	25
6.4 SUFFOLK COUNTY POLICE DEPT. (SCPD)	26
6.5 TOWN OF BABYLON	26
6.6 EAST FARMINGDALE FIRE DEPT. (EFFD)	26
6.7 BRUNSWICK HOSPITAL CENTER	26
7.0 EVACUATION PLAN	26
8.0 REPORTS	29

LIST OF TABLES

TABLE NO.	TITLE	PAGE NO.
I	BULK MATERIAL STORAGE	5
II	DRUM STORAGE	7
III	DISTILLATION PROCESS EQUIPMENT	11
IV	EMERGENCY EQUIPMENT	22

	PAGE NO.
FIGURE I - LOCATION MAP	3

APPENDIX 1 - EMERGENCY TELEPHONE NUMBERS

APPENDIX 2 - MATERIAL SAFETY DATA SHEETS

CONTINGENCY PLAN

PRIDE SOLVENTS & CHEMICAL CO., INC.

WEST BABYLON, NEW YORK

SEPTEMBER 1986

1.0 - FACILITY IDENTIFICATION AND GENERAL INFORMATION

1.1 - SCOPE

This plan is intended to outline the existing operations at Pride Solvents & Chemical Co., Inc. (Pride Solvents) of 78 & 88 Lamar St., West Babylon, New York, so as to assist the various regulatory agencies and emergency response teams in the event of an emergency occurring at the facility. The plan identifies possible emergency conditions, response procedures, emergency equipment and coordination agreements with the local authorities.

The Contingency Plan has been prepared in conformance with the requirements of 6 NYCRR Subpart 373-2, New York State Department of Environmental Conservation, Final Status Standards for Owners and Operators of Hazardous Waste Treatment, Storage and Disposal Facilities, Section 373-2.4, Contingency Plan and Emergency Procedures. The plan is specifically designed to address the hazardous waste storage activities at Pride Solvents. Details on the chemical packaging, distribution and waste reclamation activities at Pride Solvents are provided solely for informational purposes.

1.2 GENERAL INFORMATION

Facility Name:	Pride Solvents & Chemical Co., Inc.
Address:	78 & 88 Lamar Street West Babylon, N.Y. 11704
Telephone No:	(516) 643-4800
Owner:	Pride Solvents & Chemical Co., Inc.
Operator:	Pride Solvents & Chemical Co., Inc.
EPA Ident. No:	NYD 057722258

1.3 - INTRODUCTION

Pride Solvents (EPA I.D. No. NYD 057722258) operates a chemical solvent distribution facility out of a 5,800 square foot building located on the west side of Lamar St. in West Babylon, Suffolk County. The facility is east-southeast of the Babylon Town Landfill (see Figure 1, Location Map).

Operations conducted at this facility (88 Lamar St.) are strictly limited to bulk storage and distribution, drum storage and distribution, and drum packaging of virgin organic solvents for distribution. There are no processing or manufacturing operations conducted. The materials handled are limited to three basic categories: non-flammable, flammable and combustible organic solvents.

Pride Solvents' operations also include the reclamation of chlorinated and fluorinated solvents by distillation in an adjacent facility located at 78 Lamar St. The facility affords approximately 7,700 square feet of available floor space and is designed to receive waste chlorinated and fluorinated solvents in

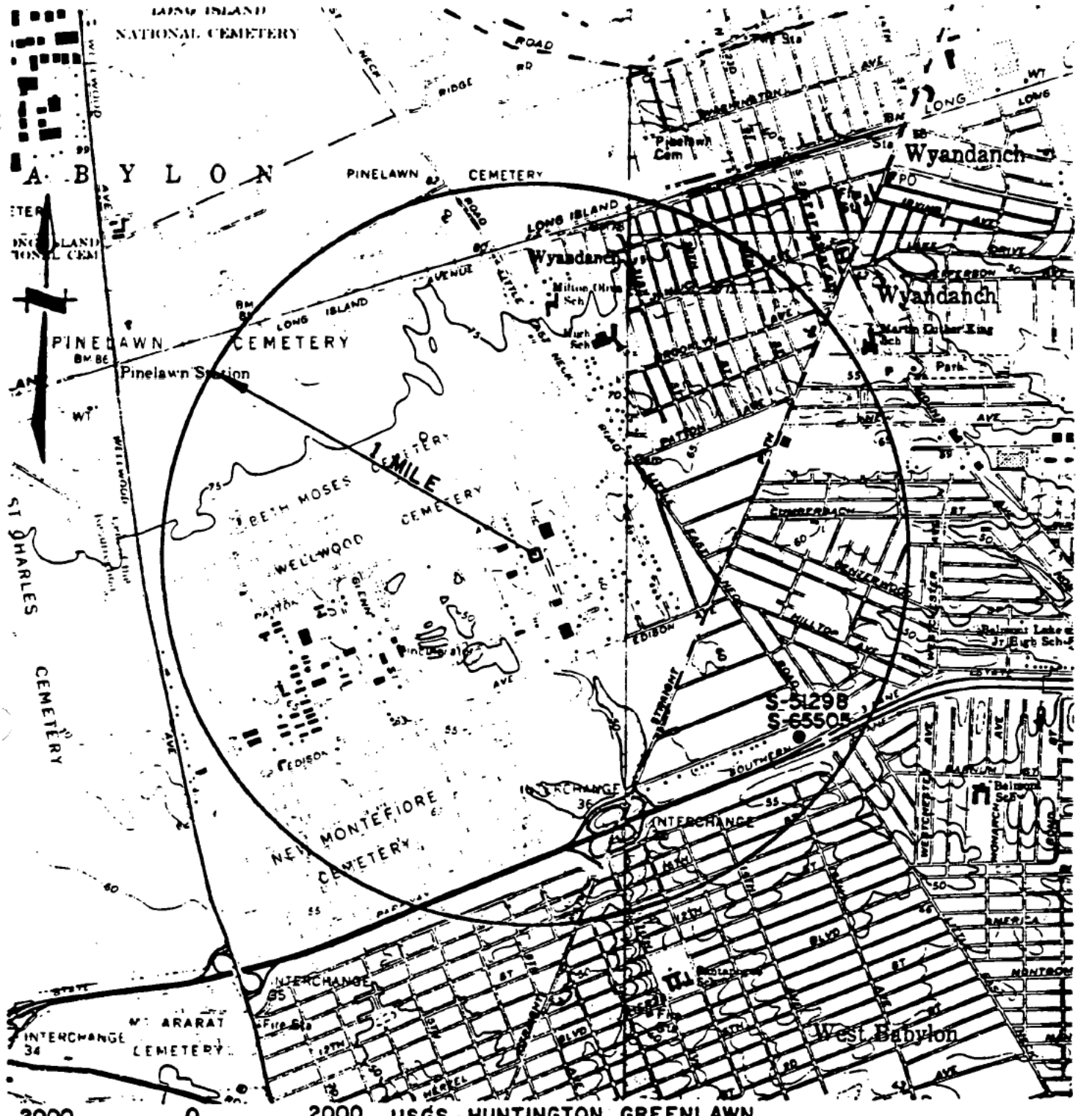

2000 0 2000

SCALE: 1" = 2000'

USGS - HUNTINGTON, GREENLAWN, AMITYVILLE & BAY SHORE WEST QUADRANGLES 7.5 MIN. SERIES

LOCATION MAP

SHOWING PUBLIC WATER

PRIDE SOLVENTS & CHEMICAL CO., INC.

WEST BABYLON, SUFFOLK CO., NEW YORK

EPA I.D. NO. NYD 057722258

55-gallon drums, store the waste solvents in an indoor containment area and reclaim the solvents by distillation.

1.4 - CURRENT OPERATIONS

Pride Solvents distributes combustible, flammable and non-flammable organic solvents. Table I lists the current organic solvents distributed, as well as the type and capacity of each storage vessel utilized.

Normal drum inventories are presented in Table II. Non-flammable and non-combustible drummed materials are stored indoors at 88 Lamar St. This is limited primarily to chlorinated solvents and freons. Flammable and combustible drummed materials are stored outdoors.

Drawing No. PRID 84-01-2, Facility Site Plan, identifies all indoor and outdoor bulk storage tanks, referencing the tank identification numbers listed in Table I.

1.5 - PRODUCT RECLAMATION

As previously mentioned, Pride Solvents' operations include the reclamation of waste solvents by a distillation process at 78 Lamar St. The facility has undergrone extensive modifications in accordance with construction plans submitted to and approved by the Suffolk County Department of Health Services (SCDHS) to ensure overall compliance with Article XII (Suffolk County Job No. HM 8220, Approval dated March 25, 1982). The finished facility was inspected by SCDHS and approved for operation on April 21, 1982.

The facility is equipped to receive and store waste chlorinated and fluorinated solvents, then reclaim the material by a

TABLE I

BULK MATERIAL STORAGE

PRIDE SOLVENTS & CHEMICAL CO., INC.

TANK NO.	PRODUCT	STORAGE GALLONS
1	XYLOL (dimethylbenzene) (a)	3000 (1)
2	VM&P (naptha) (A)	3000 (1)
3	LAKTANE (mixture C_7-C_8) (A)	3000 (1)
4	VARSOL #3 (stoddard solvent) (C)	3000 (1)
5	METHANOL (methyl alcohol) (A)	3000 (1)
6	TECSOL 190 (ethanol) (A)	3000 (1)
7	LOPS (aliphatic solvent) (C)	3000 (1)
8	DIESEL FUEL (C)	3000 (1)
9	GASOLINE (A)	3000 (1)
10	LOPS (aliphatic solvent (C)	5000 (1)
11	TOLUOL (methyl benzene) (A)	6000 (1)
12	ACETONE (dimethyl ketone) (A)	6000 (1)
13	150 ALCOHOL (isopropyl alcohol) (A)	6000 (1)
14	MEK (methyl ethyl ketone) (A)	6000 (1)
15	VARSOL #18 (stoddard solvent) (C)	6000 (1)
16	VARSOL #1 (stoddard solvent) (C)	6000 (1)
17	CHLORO-NU (1,1,1-trichloroethane) (B)	5000 (2)
18	METHYLENE CHLORIDE (B)	5000 (2)
19	PERCHLOROETHYLENE (tetrachloroethylene) (B)	5000 (2)
20	TRICHLOROETHYLENE (B)	5000 (2)
21	CHLORO-VG (1,1,1-trichloroethane) (B)	5000 (2)

TABLE I (CONT'D.)

TANK NO.	PRODUCT	STORAGE GALLONS
22	CHLORO-VG (1,1,1-trichloroethane) (B)	5000 (2)
23	PERCHLOROETHYLENE (tetrachloroethylene) (B)	5000 (2)
24	DOW EB (butyl cellosolve) (C)	5000 (2)
25	FREON (fluorinated solvent) (B)	5500 (2)

NOTES:

(1) Outside storage, below grade

(2) Inside storage, above grade

(A) flammable

(B) non-flammable

(C) combustible

TABLE II

DRUM STORAGE

PRIDE SOLVENTS & CHEMICAL CO., INC.

CHEMICAL	DRUMS ON HAND
Acetone	11
1,1,1-Trichloroethane	95
Anti-freeze	17
Aromatic 150	4
NButyl Acetate	3
Sec. Butyl Alcohol	3
Carbon Tetrachloride	2
Diacetone Alcohol	15
Dibutyl Phthalate	3
Diethanolamine	2
Diethylene Glycol	9
Diethylene Triamine	2
Diisopropanolamine	1
DioctylyPhthalate	3
Dipropylene Glycol	4
Dowanol DE	4
Dowanol EB	9
Dowanol EE	3
Dowanol EM	2
EE Acetate	1
Ethyl Acetate 99	3

TABLE II (CONT'D.)

CHEMICAL		DRUMS ON HAND
Ethylene Dichloride		1
Ethylene Glycol		18
Freons:	TF	80
	TES	2
	TMC	40
	TMS	50
	TA	2
	TDF	3
	TP35	1
	MF	1
	TWD602	3
	TE	2
Glycerine		8
HAN		4
Heptone		2
Isobutyl Acetate		1
Isobutyl Alcohol		1
Isopropanol		10
TXIB		1
Lacquer Thinner		4
Methanol		4
Methylene Chloride		10

TABLE II (CONT'D.)

CHEMICAL	DRUMS ON HAND
MEK	7
Mineral Spirits	13
Monochlorobenzene	1
Morpholine	2
N. Propyl Acetate	4
N. Propyl Alcohol	3
Perchloroethylene	16
Polyethylene Glycol	6
Propylene Glycol	20
Rubber Solvent	1
Shell Solv 71	16
Styrene Monomer	7
Ethyl Alcohol	20
Texanol	3
Shell Sol B	6
Toluene	6
Trichloroethylene	16
Tripropylene Glycol	6
Vinyl Toluene	2
VMP	1
Xylol	10

distillation process. Waste materials are received exclusively in 55-gallon drums, and stored indoors within a bermed epoxy-coated containment area. Drums are stacked two (2) high atop wooden pallets. The containment area for drum storage and waste solvent reclamation affords a total of approximately 3,800 square feet of available floor space.

The distillation unit is Detrex solvent still, Model No. S400. The solvents from 55 gallon drums are directly transferred to the settling tank and from there to the distillation unit. Waste solvent is heated to its boiling point; thereby vaporizing the solvent, freeing it from the contaminated portion. Solvent vapors then pass over condensers, and the collected clean solvent distillate flows from the condensate pan to a water cooled water separator.

Heat to the distillation unit is provided in the form of steam by a 20 HP Fulton boiler. Cooling water to the condensers and water separator is supplied by a closed loop non-contact cooling water system.

Distillate from the water separator is pumped through a Detrex drying system. The system consists of a series of ion exchange columns designed to remove residual water from the distilled solvent. From the drying system, the reclaimed solvent is directed to one of three finished product (distillate) storage tanks.

Table III, Distillation Process Equipment, presents the design capacities of each tank and process unit in the distillation

Revised by NYSDEC to delete references to feed tanks closed by the permittee (reference: permittee's letter dated March 28, 1988)

TABLE III

DISTILLATION PROCESS EQUIPMENT

PRIDE SOLVENTS & CHEMICAL CO., INC.

TANK	PROCESS EQUIPMENT	CAPACITY IN GALLONS
A	Settling Tank	650
B	Distillation Unit	75/150 gallons/hr.
C	Drying Column System	150 gallons/hr.
D	Distillate Storage Tank-1	2000
E	Distillate Storage Tank-2	500
F	Distillate Storage Tank-3	275
G	Cooling Water Reservoir	250

operation. Every tank in the distillation process is equipped with high level sensors with audible alarms, as well as sight gauges for visual inspection to prevent the possibility of overfilling.

As in the drum storage area, the distillation process area is located within an epoxy coated bermed (8-inch) containment area.

1.6 - SPILL CONTAINMENT PROVISIONS

All 55-gallon drums containing waste solvents awaiting reclamation are stored indoors. The drum storage and reclamation areas afford a total of approximately 3,800 square feet of floor area. The perimeter of the storage and reclamation areas is surrounded by an 8-inch high concrete berm. The containment volume provided within the bermed area totals approximately 16,500 gallons. There are no floor drains. Any and all spills will be contained within the bermed area.

Concrete rampways provide access to and from the bermed containment area. All floor joints and/or cracks were sealed using "Preco-Tile" epoxy sealant. All exposed floor, berm and rampway surfaces have received one (1) coat of "Preco-Tile" epoxy sealant and one (1) coat of "Preco-Liqui-Steel".

2.0 - EMERGENCY COORDINATORS

Primary Emergency Coordinator:	Arthur Dhom 10 Serene Ct. Dix Hills, NY 11731 Home: (b) (6) [redacted] Work: (516) 643-4800
Alternate Emergency Coordinators:	Bruce Brehm 1415 Grundy Ave. Holbrook, NY 11741 Home: (b) (6) [redacted] Work: (516) 643-4800
	John Keogh 127 Front St. Brentwood, NY 11717 Home: (b) (6) [redacted] Work: (516) 643-4800
Waste Cleanup Contractor:	Marine Pollution Control, Inc. 375 Dunton Ave. East Patchogue, NY 11772 (516) 654-4900

One of the above-named Emergency Coordinators will be on-site at all times during Pride Solvents' normal operating hours. All can be reached by telephone in case of an emergency during off working hours. In the event of an emergency, the Primary Emergency Coordinator should be contacted immediately. If the Primary Emergency Coordinator is not available, one of the Alternate Emergency Coordinators should be contacted.

The Emergency Coordinators are authorized to instruct other plant personnel in their assistance in the event of an emergency.

All are authorized to commit the resources necessary to implement the Contingency Plan.

Each Emergency Coordinator is thoroughly familiar with all aspects of Pride Solvents' Contingency Plan, operations and facility layout, as well as the locations and use of all safety and emergency response equipment. It will be the responsibility of the Emergency Coordinator to identify any and all imminent and actual emergency conditions, assess the situation and initiate the implementation of all or a portion of the Contingency Plan.

The Emergency Coordinator will also be responsible for all post-emergency actions including, but not limited to, post-emergency cleanup and submission of a written report on the incident to the regulatory agencies.

3.0 - IMPLEMENTATION OF THE CONTINGENCY PLAN

The provisions of this Contingency Plan shall be implemented whenever an incident (i.e., spill, fire or explosion) might present a hazard to human health or the environment. The Emergency Coordinator will have full responsibility for assessing each incident and making that determination.

Depending upon the degree of seriousness, the following potential situations may call for the implementation of the Contingency Plan:

1. The release of hazardous wastes from trucks during waste transfer operations.

2. The release of hazardous waste materials from any portable container in the waste storage area.
3. The release of hazardous waste from the waste reclamation system.
4. Any fire or explosion.
5. The release of dangerous fumes as a result of a fire or explosion.

The seriousness of any spill, leak or unplanned sudden or non-sudden release of hazardous materials (spent and reclaimed solvents) from drums or tanks within the 78 Lamar St. reclamation facility will be minimized due to the secondary spill containment provisions incorporated into the facility's design.

4.0 - EMERGENCY RESPONSE PROCEDURES

4.1 - NOTIFICATION

Any plant personnel discovering an imminent or actual emergency that is not readily controllable with equipment at hand, must immediately notify other plant personnel using the paging system and summon the Emergency Coordinator. If the emergency situation involves a fire or explosion, the employee discovering the emergency must immediately notify the Fire Department.

The Emergency Coordinator, upon being notified of an emergency condition, must assess the situation and notify the appropriate parties, identified in Section 6.0 of this plan. In the case of a fire or explosion, he will order the facility immediately evacuated, if this has not already been done. Once the

facility is evacuated, the Emergency Coordinator shall conduct a roll call of all plant personnel to determine whether any employee may be missing (see Section 7.0).

In a fire or explosion emergency, the Emergency Coordinator must notify:

1. East Farmingdale Fire Dept. - (516) 249-0047
2. Suffolk County Fire Safety Dept. - (516) 924-5252
3. Suffolk County Dept. of Health Services - (516) 451-4634
4. New York State Dept. of Environmental Conservation - (516) 751-7900, (518) 457-7362

In a non-fire emergency (hazardous waste release), the Emergency Coordinator must notify:

1. Suffolk County Police Dept. - 911
2. Suffolk County Fire Dept - (516) 924-5252
3. Suffolk County Dept. of Health Services - (516) 451-4634
4. New York State Dept. of Environmental Conservation - (516) 751-7900, (518) 457-7362

In notifying the appropriate authorities, the Emergency Coordinator should provide the following information:

1. Name, location, address and telephone number of where he is calling from.
2. Name, location and address of emergency incident.
3. Nature of emergency.
4. Materials involved.
5. Source of leak, spill, fire or explosion.
6. Areal extent of release.
7. Amount of waste involved.
8. Expected number of casualties (if applicable).

4.2 - CONTAINMENT AND CONTROL

The Emergency Coordinator, with the assistance of any emergency personnel responding to the incident, will take all necessary measures to contain and prevent the spread of any hazardous condition. In case of a leak or spill, absorbent material will be placed on and around the spill, and the contents of the leaking drum(s) or tank(s) transferred to secure containers.

In the case of a fire or explosion, dry chemical or alcohol-type foam should be used (all the chemicals handled at Pride Solvents are organic solvents and water spray may be ineffective). Respiratory protection should be provided for all fire fighting personnel.

4.3 - FIRE OR EXPLOSION

In case of fire, hand-held fire extinguishers should be used to control and contain the incident. Portable fire extinguishers are located throughout the facility, as shown on Drawing No. PRID 84-01-2, Facility Site Plan.

In case of a major fire or explosion, the Emergency Coordinator shall order the facility evacuated. The Emergency Coordinator shall be responsible for notifying fire fighting personnel as to the source of the fire and/or explosion and the locations and nature of all hazardous materials in the general vicinity.

Fire fighting personnel responding to an emergency should utilize dry chemical or foam type extinguishing equipment. Respiratory protection should be provided for all fire fighting personnel.

Specific actions to be taken by plant personnel are as follows:

1. Activities in all areas of the facility shall be shut down. (An emergency shut-off switch for the distillation unit is located at the entrance to the reclamation area).
2. Fire doors shall be closed to prevent the fire from spreading.
3. The affected area will be cleared of all non-fire fighting personnel.
4. Non-fire fighting personnel shall report to the designated muster point.
5. Fire fighting plant personnel shall attempt to contain the incident with fire extinguishers until the East Farmingdale Fire Department arrives.

4.4 - SPILLS OR RELEASES

Upon discovering a spill, leak or other release of hazardous material, plant personnel shall immediately contact the Emergency Coordinator. The Emergency Coordinator shall determine the following:

1. Source of the release.
2. Materials involved.
3. Estimated volume of release.
4. Direction in which release is headed.
5. Injuries involved.
6. Fire or explosion potential.

Based upon the above information, the Emergency Coordinator shall assess the overall hazards to personnel safety and the environment. Personnel safety shall be given first priority.

In the event of a minor spill or leak in the drum storage area, the following action shall be taken:

1. The release shall be contained by placing absorbent material on and around the perimeter of the spill.
2. Materials from the leaking container(s) shall be transferred to secure drum(s).
3. Depending upon the volume of material released, the spill shall be removed from the containment floor using either a portable pump or absorbent material, and placed in a secure drum.

In the event of major spill or release in the drum storage area or reclamation area, the following actions shall be taken:

1. All hazardous waste activities shall be shut down (an emergency shut-off switch for the distillaton unit is located at the entrance to the reclamation area).
2. The affected area shall be cleared of all personnel except those involved in the cleanup.
3. Spilled material shall be transferred from the containment area to secure drum(s) using a portable pump.
4. Residues shall be collected using absorbent material and placed in a secure drum.

In the event of a spill or release in the loading and unloading area, the following actions shall be taken:

1. The leaking drum(s) shall be immediately transferred into the containment area inside the drum storage area of the facility.
2. Absorbent material shall be placed between the spill and the stormwater dry well.
3. Materials from the leaking drum(s) shall be transferred to a secure drum(s).
4. If the spill entered the dry well, Marine Pollution Control shall be contacted to immediately pump and clean the dry well.

4.5 - POST-EMERGENCY ACTIONS

Following an emergency condition, the Emergency Coordinator will be responsible for overseeing all post-emergency cleanup operations. This may involve the removal of any contaminated soil, water or other materials affected by the emergency.

Minor cleanups following a spill or other release will be handled by Pride Solvents' personnel. Major cleanups involving the removal of contaminated soil and/or contaminated runoff will be handled by Marine Pollution Control, Inc. Marine Pollution Control is equipped to excavate soils and pump and clean contaminated stormwater dry wells.

If a spill incident involves a single product, the material recovered during the subsequent cleanup will be held for reclamation at Pride Solvents. All other materials recovered from a cleanup will be disposed of off-site at a licensed TSDF. With

the exception of materials pumped from stormwater dry wells, all contaminated materials resulting from a cleanup will be placed in secure drums for off-site disposal. Materials pumped from dry wells will be shipped off-site in bulk tanker trucks. Drummed materials may be stored temporarily in Pride Solvents' drum storage area before shipment off-site.

The Emergency Coordinator will also be responsible for ensuring that all emergency equipment is restored to full operating condition before operations in the affected area are allowed to resume. He will investigate the cause of the emergency and take the necessary action to prevent its recurrence. This may include amendments to the Contingency Plan.

All follow-up reports regarding the emergency condition will be prepared and submitted to the appropriate authorities, as outlined in Section 8.0 of this plan.

5.0 - EMERGENCY EQUIPMENT

A list of the various emergency response equipment together with location and function/capacity of the equipment is presented in Table IV, Emergency Equipment.

5.1 - COMMUNICATION SYSTEMS

Paging telephones, to be used for internal warning, are located throughout the facility. Paging horns are located both inside and outside the facility. Hand-held two-way radios are also available. The paging telephones are capable of warning personnel inside and outside the facility and calling outside emergency personnel (fire, police).

TABLE IV

EMERGENCY EQUIPMENT

PRIDE SOLVENTS & CHEMICAL CO., INC.

ITEM	NO. OF UNITS	LOCATION	FUNCTION/CAPABILITY
Telephones	13	Throughout Plant See Site Plan	-Plant Paging/Warning -Outside Lines
Paging Horns	5	Throughout Plant See Site Plan	-Plant Paging/Warning
Two-Way Radios	1 Set	88 Lamar St. Office	-Two Way Contact
5 lb. Dry Chemical Fire Extinguishers	3	Throughout Plant See Site Plan	-Class A,B,C Fire Control - Portable
10 lb. Dry Chemical Fire Extinguishers	8	Throughout Plant See Site Plan	-Class A,B,C Fire Control - Portable
15 lb. Dry Chemical Fire Extinguishers	2	Throughout Plant See Site Plan	-Class A,B,C Fire Control - Portable
150 lb. Portable Dry Chemical Fire Extinguishers	1	88 Lamar St. Blending & Distribution Area	-Class A,B,C Fire Control - Portable
30 lb. Ansol Dry Chemical System	1	88 Lamar St. Back Blending Area	-Class A,B,C Automatic Fire Control - Stationary
Fire Hydrant	1	Lamar St.	-Class A Fire Control
Fire Blankets	2	78 Lamar St. - Drum Storage 88 Lamar St. - Back Area	-Class A Fire Control
First Aid Kit	1	88 Lamar St. - Office	-Minor Cuts & Burns First Aid, Oxygen Tank & Mask

TABLE IV (CONT'D.)

ITEM	NO. OF UNITS	LOCATION	FUNCTION/CAPABILITY
Safety Showers	3	78 Lamar St. - Reclamation Area 88 Lamar St. - South Side 88 Lamar St. - North Side	-Water Flushing for Chemical Exposure or Clothing Fire
Eye Wash Station	1	88 Lamar St. - Back Area	-Water Flushing for Chemical Exposure
Safety Goggles, Hard Hats & Protective Clothing	1 Set/ Employee	88 Lamar St. - Locker Area	-Personnel Protection from Chemical Exposure
Respirator Masks	1/ Employee	88 Lamar St. - Locker Area	-Respiratory Protection
Absorbent Material	24-40 lb. Bags	78 Lamar St. - Drum Storage Area 88 Lamar St. - Back Area	-Spill Control
Portable Pump	1	78 Lamar St. - Reclamation Area	-Spill Collection/ Transfer
Empty Drums	50	78 Lamar St. - Drum Storage Area 88 Lamar St. - Back Area	-Spill Collection

5.2 - FIRE CONTROL

Five, 10 and 15 pound wall-mounted ABC dry chemical fire extinguishers are located throughout the Pride Solvents' facility for fire control. In addition, a 150 pound portable wheel-type dry chemical fire extinguisher is located in the drum storage and packaging area at the 88 Lamar St. facility. The bulk chemical transfer station is equipped with an automatic 30 pound Ansol dry chemical extinguishing system, activated by thermal detection sensors. All fire extinguishers are designed to control Class A (paper, wood, cloth), Class B (gasoline, oil) and Class C (electrical) fires. There is a fire hydrant at the foot of Pride Solvents' driveway on Lamar St. See Drawing No. PRID 84-01-2, Facility Site Plan, for location of fire control equipment. Neither of the two plant buildings at Pride Solvents are equipped with sprinkler systems. All of the chemicals handled by Pride Solvents are organic solvents and water may be ineffective in fire fighting.

5.3 - PERSONNEL PROTECTION

Safety goggles, hard hats, protective gloves and respirators are maintained in the locker area inside the 88 Lamar Street facility. A first aid kit is located outside of the office area in the 88 Lamar St. facility. The kit is equipped to handle minor cuts and burns. An oxygen tank and mask are also located at the first aid station. Emergency wash showers are located on the northwest and south side of the 88 Lamar St. facility and in the reclamation area of the 78 Lamar St. facility.

5.4 - SPILL CONTROL

Each facility is stocked with an ample supply of absorbent material (Speedydri) to contain any spills or leaks. For major spills, a portable pump is available in the reclamation area to remove material from within the spill containment area. Empty 55-gallon drum containers are maintained in both the 78 and 88 Lamar Street facilities.

6.0 - COORDINATION AGREEMENTS

6.1 - NEW YORK STATE DEPT. OF ENVIRONMENTAL CONSERVATION (NYSDEC)

NYSDEC Region I (516-751-7900) has received a copy of this Contingency Plan. In case of an emergency condition, Region I should be contacted. Representatives of the NYSDEC shall assist Pride Solvents in assessing any remedial action necessary as the result of a release. If necessary, the Albany office of the NYSDEC can be contacted at (518) 457-7362.

6.2 - SUFFOLK COUNTY DEPT. OF HEALTH SERVICES (SCDHS)

SCDHS (516-451-4634) has received a copy of this Contingency Plan. They have reviewed and approved construction plans for upgrading Pride Solvents' facility to Article XII standards and are familiar with the operations. In case of a spill or other emergency condition, James Pim, Hazardous Materials Management Section, should be notified. After hours - (516) 360-5555.

6.3 - SUFFOLK COUNTY FIRE SAFETY DEPT. (SCFSD)

SCFSD (516-924-5252) has received a copy of this Contingency Plan. Upon notification of any problem at the above site SCFSD

will be responsible for notifying area hospitals, if necessary, and will notify the Town of Babylon Dept. of Fire Prevention who will work with SCFSD and the Emergency Coordinator. SCFSD will also be responsible for the coordination of local fire departments and ambulance companies with Pride Solvents' Emergency Coordinator.

6.4 - SUFFOLK COUNTY POLICE DEPT. (SCPD)

Officer Dominick Parrella, SCPD (516-286-5236), Planning and Research Center, has received a copy of this Contingency Plan. In an emergency condition, the SCPD should be contacted by calling 911.

6.5 - TOWN OF BABYLON

A copy of this Contingency Plan was forwarded to Mr. Gilbert Hanse, Jr., Fire Safety Director, Town of Babylon.

6.6 - EAST FARMINGDALE FIRE DEPT. (EFFD)

Although located in West Babylon, the EFFD (516-249-0047) would respond to any fire or rescue emergency and has received a copy of this Contingency Plan.

6.7 - BRUNSWICK HOSPITAL CENTER

Brunswick Hospital Center (516-789-7000) has received a copy of this Contingency Plan and will incorporate it into their own disaster response plan.

7.0 - EVACUATION PLAN

Personnel at Pride Solvents will be evacuated in case of a fire, explosion or other emergency condition which the Emergency

Coordinator deems as a danger to their personnel safety. If evacuation is necessary, plant personnel will be notified over the paging system.

Primary and alternative emergency routes for the various work areas are as follows:

78 LAMAR STREET:

RECLAMATION AREA	PRIMARY - Exit through loading door on the north side of the building via the drum storage area. ALTERNATE - Emergency exit on south side of reclamation area.
DRUM STORAGE AREA	PRIMARY - Exit through loading door on the north side of the building. ALTERNATE - Emergency exit in lab.
OFFICE AREA	PRIMARY - Exit through front door on east side of facility. ALTERNATE - Exit through loading door on the north side of the building via the drum storage area.

88 LAMAR STREET:

FILLING & BLENDING AREA	PRIMARY - Exit through loading door on the south side of the building. ALTERNATE - Exit through office door on the southeast corner of the building.
BACK AREA	PRIMARY - Exit through back door on the west side of the building.

ALTERNATE - Exit through loading door on the south side of the building via the filling & blending area.

OFFICE AREA

PRIMARY - Exit through the office door on the southeast corner of the building.

ALTERNATE - Exit through loading door on the south side of the building via the filling & blending area.

Personnel should evacuate the facility through the nearest safe exit and proceed to the muster point in the parking area on the south side of the facility. Once at the designated muster point, the Emergency Coordinator or one of his alternates shall conduct a roll call to ensure that all personnel are accounted for and that no employees are missing. Personnel shall not attempt to move their cars, unless authorized by the Emergency Coordinator, as this may hinder the movement of emergency vehicles.

In case of a major emergency (large fire), it may be necessary to evacuate the general area. Depending upon the extent of the fire, as well as meteorological conditions, it would appear prudent to evacuate Lamar St. between Patton Ave. to the north and Edison Ave. to the south. The evacuation should also include the two streets parallel to Lamar St. (Kean St. on the west and Mahan St. on the east) also between Patton Ave. and Edison Ave. Since the general area is bounded by Pinelawn Cemetery (north of Patton Ave., as well as south of Edison Ave.), the entire wedge into Pinelawn Cemetery bounded by Wellwood Ave. on the west and

East Neck Rd. on the east, could be used for limits, if it became necessary to extend the evacuation limits. Pride Solvents' Primary Emergency Coordinator or Alternate Emergency Coordinators will be available to assist fire and health officials in making a determination as to whether or not evacuation of local areas is warranted.

8.0 - REPORTS

Following an emergency condition which required implementation of all or a portion of this Contingency Plan, the Emergency Coordinator shall submit to the regulatory agencies, a report within fifteen (15) days after the incident. The report must contain the following information:

1. Name, address, telephone number of owner/operator (Pride Solvents).
2. Name, address, telephone number of facility (Pride Solvents).
3. Location, time, date and nature of the incident.
4. Type and quantity of material(s) involved in incident.
5. Extent of injuries, if any.
6. The cause of the incident.
7. Assessment of actual or potential hazards to human health and/or environment, if applicable.
8. All actions taken by Pride Solvents and any emergency response personnel as a result of the incident.
9. A description of the cleanup efforts taken following the incident.

10. Quantity and disposition of waste material generated as a result of cleanup/remediation.

11. Any corrective measures initiated to prevent a similar occurrence.

12. Amendments to the Contingency Plan, if warranted.

The report should be forwarded to the following agencies:

1. New York State Dept. of Environmental Conservation.
2. Suffolk County Dept. of Health Services.
3. Suffolk County Dept. of Fire Safety.

APPENDIX 1

EMERGENCY TELEPHONE NUMBERS

EMERGENCY TELEPHONE NUMBERS

Emergency Coordinators Home Telephone Numbers	Arthur Dohm Bruce Brehm John Keogh	(b) (6) [redacted] (b) (6) [redacted]
Suffolk County Police Dept.		911
East Farmingdale Fire Dept.		(516) 249-0047
Suffolk County Fire Safety Dept.		(516) 924-5252
Suffolk County Dept. of Health Services After Hours		(516) 451-4634 (516) 360-5555
New York State Dept. of Environmental Conservation - Region I Stony Brook Albany		(516) 751-7900 (518) 457-7362
Brunswick Hospital Center		(516) 789-7000
Marine Pollution Control		(516) 654-4900

APPENDIX 2

MATERIAL SAFETY DATA SHEETS

TANK 1

ADAPTED FROM USDL FORM NO LSD-008-4-MAY 1969

SHELL OIL COMPANY
SHELL CHEMICAL COMPANY
SHELL DEVELOPMENT COMPANY
SHELL PIPE LINE CORPORATION

MSDS 761-2

HAZARD RATING 292

NFPA

MATERIAL SAFETY DATA SHEET

Information on this form is furnished solely for the purpose of compliance with the Occupational Safety and Health Act of 1970 and shall not be used for any other purpose. Use or dissemination of all or any part of this information for any other purpose may result in a violation of law or constitute grounds for legal action.

SECTION I

MANUFACTURER'S NAME: Shell Chemical Company	EMERGENCY TELEPHONE NO.: 713-473-9461
ADDRESS (Number, Street, City, State, and Zip Code): One Shell Plaza, P. O. Box 2463, Houston, TX 77001	
CHEMICAL NAME AND SYNONYMS: xylene, dimethyl benzene; methyl toluene, xylol	TRADE NAME: Shell Xylene
CHEMICAL FAMILY: aromatic hydrocarbon	FORMULA: $C_6H_4(CH_3)_2$

SECTION II HAZARDOUS INGREDIENTS*

COMPOSITION	%	SPECIES	LD_{50} ORAL	LD_{50} DERMAL	LC_{50} CONCENTRATION	LC_{50} HOURS
Shell Xylene*	100	Rat	>5.0 ml/kg		5,000 ppm (approx.)	4
		Rabbit		>2.0 ml/kg		

* A mixture of ortho-, meta-, and para- xylenes plus ethylbenzene

SECTION III PHYSICAL DATA

BOILING POINT (°F)	281-284	SPECIFIC GRAVITY (H_2O=1)	0.871
VAPOR PRESSURE (mmHg) 68°F (20°C)	6	PERCENT VOLATILE BY VOLUME (%)	
VAPOR DENSITY (AIR=1)	3.7	EVAPORATION RATE (_____=1) nBuAc=1	0.6
SOLUBILITY IN WATER	Negligible		

APPEARANCE AND ODOR: Colorless liquid with aromatic odor.

SECTION IV FIRE AND EXPLOSION HAZARD DATA

FLASH POINT (Method used): Tag Closed Cup 81°F	FLAMMABLE LIMITS	LEL: 1.0	UEL: 7.0

EXTINGUISHING MEDIA: Handle as a FLAMMABLE LIQUID. Use foam, CO_2, steam, water-fog, dry chemicals

SPECIAL FIRE FIGHTING PROCEDURES: Do not use water, exclude air. Use water spray to cool exposed drums. Wear self-contained breathing apparatus. Consult local fire marshal.

UNUSUAL FIRE AND EXPLOSION HAZARDS: None

*Modified by Shell Oil Company

SECTION V HEALTH HAZARD DATA

THRESHOLD LIMIT VALUE
150 ppm

EFFECTS OF OVEREXPOSURE
Anesthesia - headache, nausea, dizziness, etc. Liquid slightly irritating to skin and eyes.

EMERGENCY AND FIRST AID PROCEDURES
Remove victim and restore breathing if required. Remove liquid from skin with soap and water. Flush eyes with water.

SECTION VI REACTIVITY DATA

STABILITY			CONDITIONS TO AVOID
	UNSTABLE		
	STABLE	X	

INCOMPATABILITY (Materials to avoid)
Not applicable.

HAZARDOUS DECOMPOSITION PRODUCTS
CO, CO_2 when combusted

HAZARDOUS POLYMERIZATION			CONDITIONS TO AVOID
	MAY OCCUR		
	WILL NOT OCCUR	X	

SECTION VII SPILL OR LEAK PROCEDURES

STEPS TO BE TAKEN IN CASE MATERIAL IS RELEASED OR SPILLED
Avoid open flame or spark sources. Provide adequate ventilation.

WASTE DISPOSAL METHOD
Evaporate or flush with water to an open, well-ventilated area. Use oil sewer if available. Remove to container.

SECTION VIII SPECIAL PROTECTION INFORMATION

RESPIRATORY PROTECTION (Specify type)
Organic canister mask or air pack.

VENTILATION	LOCAL EXHAUST	SPECIAL
	MECHANICAL (General) With approved Class D explosion-proof motors and switches.	OTHER

PROTECTIVE GLOVES
Normally not required

EYE PROTECTION
Conventional eye cover to guard against unexpected splashing.

OTHER PROTECTIVE EQUIPMENT

SECTION IX SPECIAL PRECAUTIONS

PRECAUTIONS TO BE TAKEN IN HANDLING AND STORING
Avoid open flames and spark sources. Avoid splash-filling. Provide adequate ventilation. Avoid excessive heat.

OTHER PRECAUTIONS

NAME D. M. Sheets

TITLE Supervisor-Product Development-Resins

COMPANY Shell Chemical

SIGNATURE

DATE October, 1971

THE INFORMATION CONTAINED HEREIN IS BASED ON DATA CONSIDERED ACCURATE. HOWEVER, NO WARRANTY IS EXPRESSED OR IMPLIED REGARDING THE ACCURACY OF THESE DATA OR THE RESULTS TO BE OBTAINED FROM THE USE THEREOF.
VENDOR ASSUMES NO RESPONSIBILITY FOR INJURY TO VENDEE OR THIRD PERSONS PROXIMATELY CAUSED BY THE MATERIAL IF REASONABLE SAFETY PROCEDURES ARE NOT ADHERED TO AS STIPULATED IN THE DATA SHEET. ADDITIONALLY VENDOR ASSUMES NO RESPONSIBILITY FOR INJURY TO VENDEE OR THIRD PERSONS PROXIMATELY CAUSED BY ABNORMAL USE OF THE MATERIAL EVEN IF REASONABLE SAFETY PROCEDURES ARE FOLLOWED. FURTHERMORE VENDEE ASSUMES THE RISK IN HIS USE OF THE MATERIAL.

ADAPTED FROM USDL
FORM NO. LSS-[illegible]-4-MAY 1969

SHELL OIL COMPANY
SHELL CHEMICAL COMPANY
SHELL DEVELOPMENT COMPANY
SHELL PIPE LINE CORPORATION

HAZARD RATING 294

3
2 0

MATERIAL SAFETY DATA SHEET

Information on this form is furnished solely for the purpose of compliance with the Occupational Safety and Health Act of 1970 and shall not be used for any other purpose. Use or dissemination of all or any part of this information for any other purpose may result in a violation of law or constitute grounds for legal action.

SECTION I

MANUFACTURER'S NAME: Shell Chemical Company	EMERGENCY TELEPHONE NO.: 713-473-9461
ADDRESS (Number, Street, City, State, and ZIP Code): One Shell Plaza, P. O. Box 2463, Houston, Texas 77001	
CHEMICAL NAME AND SYNONYMS:	TRADE NAME: Shell VM&P Naphtha EC Code 83208
CHEMICAL FAMILY: Hydrocarbon	FORMULA:

SECTION II HAZARDOUS INGREDIENTS*

COMPOSITION	%	SPECIES	LD_{50} ORAL	LD_{50} DERMAL	LC_{50} CONCENTRATION	LC_{50} HOURS
PIGMENTS						
CATALYST						
VEHICLE						
SOLVENTS	100	Rat	>5.0 ml/kg			
ADDITIVES						
OTHERS						
		Rabbit		>2.82 ml/kg		

SECTION III PHYSICAL DATA

BOILING POINT (°F)	245-265	SPECIFIC GRAVITY (H_2O=1) @ 60°F	0.750
VAPOR PRESSURE (mmHg) @ 100°F	30	PERCENT VOLATILE BY VOLUME (%)	
VAPOR DENSITY (AIR=1)	3.8	EVAPORATION RATE (n-BuAc =1)	1.2*
SOLUBILITY IN WATER	Negligible		
APPEARANCE AND ODOR	Light colored liquid with hydrocarbon odor.		

SECTION IV FIRE AND EXPLOSION HAZARD DATA

FLASH POINT (Method used): Tag Closed Cup = 55°F	FLAMMABLE LIMITS	Lel: 1.0	Uel: 7.0

EXTINGUISHING MEDIA
Exclude air - use foam, CO_2, steam, water-fog, dry chemicals.

SPECIAL FIRE FIGHTING PROCEDURES
Do not use water, exclude air, consult local fire marshal.

UNUSUAL FIRE AND EXPLOSION HAZARDS
Vapor forms explosive mixture with air between upper and lower explosion limits.

*Modified by Shell Oil Company

Time (n-butyl acetate)
Time (Shell VM&P Naphtha EC)

MSDS-762

TANE 3

LAKTANE

Form Approved
Budget Bureau No. 44-R1387
Approval Expires April 30, 1971

U.S. DEPARTMENT OF LABOR

Supersedes issue of 7/5/72

WAGE AND LABOR STANDARDS ADMINISTRATION
Bureau of Labor Standards

MATERIAL SAFETY DATA SHEET

SECTION I

MANUFACTURER'S NAME EXXON COMPANY, U.S.A. (A Division of Exxon Corporation)	EMERGENCY TELEPHONE NO. A.C. 713 Day 221-3424 Night 668-7024 622-1422
ADDRESS (Number, Street, City, State, and ZIP Code) P. O. Box 2180 Houston, Texas 77001	
CHEMICAL NAME AND SYNONYMS Petroleum Solvent	TRADE NAME AND SYNONYMS LAKTANE
CHEMICAL FAMILY Petroleum Hydrocarbon	FORMULA Complex mixture of petroleum hydrocarbons

SECTION II HAZARDOUS INGREDIENTS

PAINTS, PRESERVATIVES, & SOLVENTS	%	TLV (Units)	ALLOYS AND METALLIC COATINGS	%	TLV (Units)
PIGMENTS		n.a.	BASE METAL		n.a.
CATALYST		n.a.	ALLOYS		n.a.
VEHICLE		n.a.	METALLIC COATINGS		n.a.
SOLVENTS	100	200 ppm	FILLER METAL PLUS COATING OR CORE FLUX		n.a.
ADDITIVES		n.a.	OTHERS		
OTHERS					

HAZARDOUS MIXTURES OF OTHER LIQUIDS, SOLIDS, OR GASES	%	TLV (Units)

SECTION III PHYSICAL DATA

BOILING POINT (°F.) IBP - FBP	214-224	SPECIFIC GRAVITY (H_2O=1)	0.769
VAPOR PRESSURE (mm Hg.) @ 20°C	53 mm	PERCENT VOLATILE BY VOLUME (%)	100
VAPOR DENSITY (AIR=1)	3.7	EVAPORATION RATE (n-Butyl Acetate = 1)	3.2
SOLUBILITY IN WATER	Negligible		

APPEARANCE AND ODOR
Water white liquid. Mild hydrocarbon odor.

SECTION IV FIRE AND EXPLOSION HAZARD DATA

FLASH POINT (Method used) Tag Closed Cup 25°F	FLAMMABLE LIMITS	Lel 1.1%	Uel 6.0%

EXTINGUISHING MEDIA
CO_2, Foam, Water Fog or Dry Chemical.

SPECIAL FIRE FIGHTING PROCEDURES
Use air-supplied rescue equipment in enclosed areas. Cool exposed containers with water.

UNUSUAL FIRE AND EXPLOSION HAZARDS
Flammable liquid. Do not store with strong oxidants.

1/2/73

n.a. = not applicable

SECTION V HEALTH HAZARD DATA

THRESHOLD LIMIT VALUE
200 ppm for 8-hour working day.

EFFECTS OF OVEREXPOSURE
Inhalation of high vapor concentrations may have results ranging from mild depression to convulsions and loss of consciousness.

EMERGENCY AND FIRST AID PROCEDURES
If overcome by vapor, remove from exposure immediately; call a physician. If swallowed do not induce vomiting; call a physician. If breathing is irregular or stopped, start resuscitation, administer oxygen. Remove contaminated clothing and wash skin. Flush eyes with water until irritation subsides.

SECTION VI REACTIVITY DATA

STABILITY			CONDITIONS TO AVOID
	UNSTABLE		
	STABLE	X	

INCOMPATABILITY (Materials to avoid)
Strong oxidants like liquid chlorine and concentrated oxygen.

HAZARDOUS DECOMPOSITION PRODUCTS
Carbon monoxide in the case of incomplete combustion.

HAZARDOUS POLYMERIZATION			CONDITIONS TO AVOID
	MAY OCCUR		
	WILL NOT OCCUR	X	

SECTION VII SPILL OR LEAK PROCEDURES

STEPS TO BE TAKEN IN CASE MATERIAL IS RELEASED OR SPILLED
Remove all ignition sources. Keep people away. Recover free liquid. Add absorbent to spill area. Avoid breathing vapors. Ventilate enclosed spaces. Open all windows and doors. Keep petroleum products out of streams and waterways.

WASTE DISPOSAL METHOD
Incinerate absorbed material.

SECTION VIII SPECIAL PROTECTION INFORMATION

RESPIRATORY PROTECTION (Specify type)
Hydrocarbon vapor canister or supplied-air or a hose mask if needed.

VENTILATION		
	LOCAL EXHAUST: Face velocity > 60 fpm	SPECIAL: Use only with adequate* ventilation.
	MECHANICAL (General): Explosion-proof ventialtion equipment.	OTHER: No smoking or open lights.

PROTECTIVE GLOVES	EYE PROTECTION
Normally not needed.	Normally not needed.

OTHER PROTECTIVE EQUIPMENT
Hydrocarbon-insoluble apron if needed.

SECTION IX SPECIAL PRECAUTIONS

PRECAUTIONS TO BE TAKEN IN HANDLING AND STORING
Keep containers closed. Keep away from heat sparks and open flame.

OTHER PRECAUTIONS
Avoid prolonged or repeated contact with skin. Remove contaminated clothing. Wash skin with soap and water after contact.

(*) Adequate means equivalent to outdoors ventilation

James W. Hammond
Director of Industrial Hygiene

Wm. G. Domask, Ph.D., P.E.
Government Regulations Advisor

TANK 4

297

EXXON COMPANY, U.S.A.
A DIVISION OF EXXON CORPORATION

Form No. OSHA

U.S. DEPARTMENT OF LABOR

Supersedes issue of 1/2/

OCCUPATIONAL SAFETY AND HEALTH ADMINISTRATION

MATERIAL SAFETY DATA SHEET

DC-

SECTION I

MANUFACTURER'S NAME
EXXON COMPANY, U.S.A. (A Division of Exxon Corporation)

EMERGENCY TELEPHONE NO. A.C. 7
Day 221-3424; Night 668-702
622-142

ADDRESS (Number, Street, City, State and ZIP Code)
P. O. Box 2180 Houston, Texas 77001

CHEMICAL NAME AND SYNONYMS
Petroleum Solvent

TRADE NAME AND SYNONYMS
VARSOL 3

CHEMICAL FAMILY
Petroleum Hydrocarbon

FORMULA
Complex mixture of petroleum hydrocarbons.

SECTION II HAZARDOUS INGREDIENTS

PAINTS, PRESERVATIVES, & SOLVENTS	%	TLV (Units)	ALLOYS AND METALLIC COATINGS	%	TLV (Units)
PIGMENTS		n.a.	BASE METAL		n.a.
CATALYST		n.a.	ALLOYS		n.a.
VEHICLE		n.a.	METALLIC COATINGS		n.a.
SOLVENTS	100	100 ppm	FILLER METAL PLUS COATING OR CORE FLUX		n.a.
ADDITIVES			OTHERS		
OTHERS					

HAZARDOUS MIXTURES OF OTHER LIQUIDS, SOLIDS, OR GASES	%	TLV (Units)

SECTION III PHYSICAL DATA

BOILING POINT (°F) IBP - FBP	313-347	SPECIFIC GRAVITY (H_2O=1)	0.778
VAPOR PRESSURE (mm Hg.) @ 20°C	< 1 mm	PERCENT VOLATILE BY VOLUME (%)	100
VAPOR DENSITY (AIR=1)	4.76	EVAPORATION RATE (n-Butyl Acetate = 1)	0.08
SOLUBILITY IN WATER	Negligible		

APPEARANCE AND ODOR
Water-white color; mineral spirits odor

SECTION IV FIRE AND EXPLOSION HAZARD DATA

FLASH POINT (Method used)	FLAMMABLE LIMITS	Lel	Uel
Tag Closed Cup 105°F		0.9%	6.0%

EXTINGUISHING MEDIA
Foam, dry chemical, CO_2, water spray or fog.

SPECIAL FIRE FIGHTING PROCEDURES
Use air-supplied rescue equipment for enclosed areas.

Cool exposed containers with water.

UNUSUAL FIRE AND EXPLOSION HAZARDS
Do not store or mix with strong oxidants.

Combustible liquid

n.a. = not applicable

7/22/

SECTION V HEALTH HAZARD DATA

THRESHOLD LIMIT VALUE
100 ppm for 8-hour working day.

EFFECTS OF OVEREXPOSURE
Inhalation of high vapor concentrations may have results ranging from mild depression to convulsions and loss of consciousness.

EMERGENCY AND FIRST AID PROCEDURES
If overcome by vapor, remove from exposure immediately; call a physician. If swallowed do not induce vomiting; call a physician. If breathing is irregular or stopped, start resuscitation, administer oxygen. Remove contaminated clothing and wash skin with soap and water. Flush eyes with water until irritation subsides.

SECTION VI REACTIVITY DATA

STABILITY			CONDITIONS TO AVOID
	UNSTABLE		
	STABLE	X	

INCOMPATABILITY (Materials to avoid)
Strong oxidants like liquid chlorine and concentrated oxygen.

HAZARDOUS DECOMPOSITION PRODUCTS
Carbon monoxide in the case of incomplete combustion.

HAZARDOUS POLYMERIZATION			CONDITIONS TO AVOID
	MAY OCCUR		
	WILL NOT OCCUR	X	

SECTION VII SPILL OR LEAK PROCEDURES

STEPS TO BE TAKEN IN CASE MATERIAL IS RELEASED OR SPILLED
Remove all ignition sources. Keep people away. Recover free liquid. Add absorbent to spill area. Avoid breathing vapors. Ventilate enclosed spaces. Open all windows and doors. Keep petroleum products out of streams and waterways.

WASTE DISPOSAL METHOD
Incinerate absorbed material.

SECTION VIII SPECIAL PROTECTION INFORMATION

RESPIRATORY PROTECTION (Specify type)
Hydrocarbon vapor canister or supplied-air hose mask if needed.

VENTILATION		
LOCAL EXHAUST: Face velocity > 60 fpm	SPECIAL: Use only with adequate* ventilation.
MECHANICAL (General): Explosion-proof ventilation equipment	OTHER: No smoking or open lights.

PROTECTIVE GLOVES	EYE PROTECTION
Normally not needed.	Normally not needed.

OTHER PROTECTIVE EQUIPMENT
Hydrocarbon-insoluble apron if needed.

SECTION IX SPECIAL PRECAUTIONS

PRECAUTIONS TO BE TAKEN IN HANDLING AND STORING
Keep containers closed. Keep away from heat, sparks and open flame.

OTHER PRECAUTIONS
Avoid prolonged or repeated contact with skin. Remove contaminated clothing. Wash skin with soap and water after contact.

*Adequate means equivalent to outdoors ventilation.

James W. Hammond
Director of Industrial Hygiene

Wm. G. Domask, Ph.D., P.E.
Government Regulations Advisor

TANK 6

Form Approved
Budget Bureau No. 44-R1387
Approval Expires April 30, 1971

Form No. LSB-005-4
299

U.S. DEPARTMENT OF LABOR

WAGE AND LABOR STANDARDS ADMINISTRATION
Bureau of Labor Standards

Supersedes issue of 7/7/72

MATERIAL SAFETY DATA SHEET

SECTION I

MANUFACTURER'S NAME EXXON COMPANY, U.S.A. (A Division of Exxon Corporation)	EMERGENCY TELEPHONE NO. A.C. 713 Day 221-3424; Night 668-7024 622-1422
ADDRESS (Number, Street, City, State, and ZIP Code) P.O. Box 2180 Houston, Texas 77001	
CHEMICAL NAME AND SYNONYMS Aromatic Petroleum Solvent	TRADE NAME AND SYNONYMS AROMATIC 100
CHEMICAL FAMILY Aromatic Hydrocarbon	FORMULA Complex mixture of petroleum hydrocarbons

SECTION II HAZARDOUS INGREDIENTS

PAINTS, PRESERVATIVES, & SOLVENTS	%	TLV (Units)	ALLOYS AND METALLIC COATINGS	%	TLV (Units)
PIGMENTS		n.a.	BASE METAL		n.a.
CATALYST		n.a.	ALLOYS		n.a.
VEHICLE		n.a.	METALLIC COATINGS		n.a.
SOLVENTS	100	200 ppm	FILLER METAL PLUS COATING OR CORE FLUX		n.a.
ADDITIVES		n.a.	OTHERS		
OTHERS					

HAZARDOUS MIXTURES OF OTHER LIQUIDS, SOLIDS, OR GASES	%	TLV (Units)

SECTION III PHYSICAL DATA

BOILING POINT (°F.) IBP-FBP	311-344	SPECIFIC GRAVITY (H_2O=1) @ 60°F	0.87
VAPOR PRESSURE (mm Hg.) @ 20°C	< 1 mm	PERCENT VOLATILE BY VOLUME (%)	100
VAPOR DENSITY (AIR=1)	4.3	EVAPORATION RATE (n-Butyl Acetate = 1)	0.19
SOLUBILITY IN WATER	Negligible		
APPEARANCE AND ODOR Water-white color. Aromatic hydrocarbon odor.			

SECTION IV FIRE AND EXPLOSION HAZARD DATA

FLASH POINT (Method used)	FLAMMABLE LIMITS	Lel	Uel
Tag Closed Cup 107°F		1.0%	6.5%

EXTINGUISHING MEDIA
Foam, dry chemical, CO_2, water spray, or fog.

SPECIAL FIRE FIGHTING PROCEDURES
Use air-supplied rescue equipment for enclosed areas.

Cool exposed containers with water.

UNUSUAL FIRE AND EXPLOSION HAZARDS
Combustible liquid --- Do not store or mix with strong oxidants.

n.a. = not applicable

1/2/73

SECTION V HEALTH HAZARD DATA

THRESHOLD LIMIT VALUE
100 ppm for 8-hour working day.

EFFECTS OF OVEREXPOSURE
Inhalation of high vapor concentrations may have results ranging from mild depression to convulsions and loss of consciousness.

EMERGENCY AND FIRST AID PROCEDURES
If overcome by vapor, remove from exposure immediately; call a physician. If swallowed do not induce vomiting; call a physician. If breathing is irregular or stopped, start resuscitation, administer oxygen. Remove contaminated clothing and wash skin with soap and water. Flush eyes with water until irritation subsides.

SECTION VI REACTIVITY DATA

STABILITY			CONDITIONS TO AVOID
	UNSTABLE		
	STABLE	X	

INCOMPATABILITY (Materials to avoid)
Strong oxidants like liquid chlorine and concentrated oxygen.

HAZARDOUS DECOMPOSITION PRODUCTS
Carbon monoxide in the case of incomplete combustion.

HAZARDOUS POLYMERIZATION			CONDITIONS TO AVOID
	MAY OCCUR		
	WILL NOT OCCUR	X	

SECTION VII SPILL OR LEAK PROCEDURES

STEPS TO BE TAKEN IN CASE MATERIAL IS RELEASED OR SPILLED
Remove all ignition sources. Keep people away. Recover free liquid. Add absorbent to spill area. Avoid breathing vapors. Ventilate enclosed spaces. Open all windows and doors. Keep petroleum products out of streams and waterways.

WASTE DISPOSAL METHOD
Incinerate absorbed material.

SECTION VIII SPECIAL PROTECTION INFORMATION

RESPIRATORY PROTECTION (Specify type)
Hydrocarbon vapor canister or supplied-air hose mask if needed.

VENTILATION		
	LOCAL EXHAUST: Face velocity > 60 fpm	SPECIAL: Use only with adequate* ventilation.
	MECHANICAL (General): Explosion-proof ventilation equipment	OTHER: No smoking or open lights.

PROTECTIVE GLOVES
Normally not needed.

EYE PROTECTION
Normally not needed.

OTHER PROTECTIVE EQUIPMENT
Hydrocarbon-insoluble apron if needed.

SECTION IX SPECIAL PRECAUTIONS

PRECAUTIONS TO BE TAKEN IN HANDLING AND STORING
Keep containers closed. Keep away from heat, sparks and open flame.

OTHER PRECAUTIONS
Avoid prolonged or repeated contact with skin. Remove contaminated clothing. Wash skin with soap and water after contact.

* Adequate means equivalent to outdoors ventilation.

James W. Hammond
Director of Industrial Hygiene

Wm. G. Domask, Ph.D., P.E.
Government Regulations Advisor

TANK 10

LOW ODOR PARAFFIN SOLVENT (LOPS)

EXXON COMPANY, U.S.A.
A DIVISION OF EXXON CORPORATION

Form No. 301

Supersedes issue of 1/2/73

U.S. DEPARTMENT OF LABOR

OCCUPATIONAL SAFETY AND HEALTH ADMINISTRATION

MATERIAL SAFETY DATA SHEET

SECTION I

MANUFACTURER'S NAME EXXON COMPANY, U.S.A. (A Division of Exxon Corporation)	EMERGENCY TELEPHONE NO. A.C. 213 Day 221-3424; Night 668-7024 622-1422
ADDRESS (Number, Street, City, State and ZIP Code) P. O. Box 2180 Houston, Texas 77001	
CHEMICAL NAME AND SYNONYMS Petroleum Solvent	TRADE NAME AND SYNONYMS LOW ODOR PARAFFIN SOLVENT (LOPS)
CHEMICAL FAMILY Petroleum Hydrocarbon	FORMULA Complex mixture of petroleum hydrocarbons.

SECTION II HAZARDOUS INGREDIENTS

PAINTS, PRESERVATIVES, & SOLVENTS	%	TLV (Units)	ALLOYS AND METALLIC COATINGS	%	TLV (Units)
PIGMENTS		n.a.	BASE METAL		n.a.
CATALYST		n.a.	ALLOYS		n.a.
VEHICLE		n.a.	METALLIC COATINGS		n.a.
SOLVENTS	100	400 ppm	FILLER METAL PLUS COATING OR CORE FLUX		n.a.
ADDITIVES		n.a.	OTHERS		
OTHERS					

HAZARDOUS MIXTURES OF OTHER LIQUIDS, SOLIDS, OR GASES	%	TLV (Units)

SECTION III PHYSICAL DATA

BOILING POINT (°F) IBP - FBP	383-485	SPECIFIC GRAVITY (H_2O=1)	0.799
VAPOR PRESSURE (mm Hg.) @ 20°C	<2 mm	PERCENT VOLATILE BY VOLUME (%)	100
VAPOR DENSITY (AIR=1)	6	EVAPORATION RATE (n-Butyl Acetate = 1)	0.02
SOLUBILITY IN WATER	Negligible		

APPEARANCE AND COLOR
Water-white color; very mild, pleasant hydrocarbon odor.

SECTION IV FIRE AND EXPLOSION HAZARD DATA

FLASH POINT (Method used) Tag Closed Cup 152°F	FLAMMABLE LIMITS Vol.% at 77°F	Lel 0.6%	Uel 6.5%

EXTINGUISHING MEDIA
Foam, dry chemical, CO_2, water spray or fog.

SPECIAL FIRE FIGHTING PROCEDURES
Use air-supplied rescue equipment for enclosed areas.
Cool exposed containers with water.

UNUSUAL FIRE AND EXPLOSION HAZARDS
Do not store or mix with strong oxidants.

7/27/73

n.a. = not applicable

SECTION V HEALTH HAZARD DATA

THRESHOLD LIMIT VALUE
5 mg/m³ for oil mist or 400 ppm for vapor for 8-hour working day.

EFFECTS OF OVEREXPOSURE
Prolonged contact with the skin may lead to extraction of natural oils with resultant mild irritation.

EMERGENCY AND FIRST AID PROCEDURES
If ingested do not induce vomiting; call a physician. Remove oil-soaked clothing and wash skin with soap and water. In case of contact with eyes, flush eyes with water.

SECTION VI REACTIVITY DATA

STABILITY			CONDITIONS TO AVOID
	UNSTABLE		
	STABLE	X	

INCOMPATABILITY (Materials to avoid)
Strong oxidants like liquid chlorine and concentrated oxygen.

HAZARDOUS DECOMPOSITION PRODUCTS
Carbon monoxide in the case of incomplete combustion.

HAZARDOUS POLYMERIZATION			CONDITIONS TO AVOID
	MAY OCCUR		
	WILL NOT OCCUR	X	

SECTION VII SPILL OR LEAK PROCEDURES

STEPS TO BE TAKEN IN CASE MATERIAL IS RELEASED OR SPILLED
Recover free liquid. Add absorbent to spill area. Keep petroleum products out of public rivers, ditches, and bodies of water.

WASTE DISPOSAL METHOD
Incinerate absorbed material.

SECTION VIII SPECIAL PROTECTION INFORMATION

RESPIRATORY PROTECTION (Specify type)
Normally not needed

VENTILATION		
	LOCAL EXHAUST	SPECIAL
	MECHANICAL (General)	OTHER

PROTECTIVE GLOVES
Normally not needed

EYE PROTECTION
Normally not needed

OTHER PROTECTIVE EQUIPMENT
Normally not needed

SECTION IX SPECIAL PRECAUTIONS

PRECAUTIONS TO BE TAKEN IN HANDLING AND STORING
Keep containers closed. Keep away from heat and open flame.

OTHER PRECAUTIONS

James W. Hammond
Director of Industrial Hygiene

Wm. G. Domask, Ph.D., P.E.
Government Regulations Advisor

TANK 11

ADAPTED FROM SDL FORM NO. 158 003 6 MAY 1964

SHELL OIL COMPANY
SHELL CHEMICAL COMPANY
SHELL DEVELOPMENT COMPANY
SHELL PIPE LINE CORPORATION

HAZARD RATING 303

3 / 2 / 0

MATERIAL SAFETY DATA SHEET

Information on this form is furnished solely for the purpose of compliance with the [illegible] of 1970 [illegible] for any other purpose [illegible] statutory [illegible] for legal action.

SECTION I

MANUFACTURER'S NAME: Shell Chemical Company	EMERGENCY TELEPHONE NO.: 713-473-9461
ADDRESS (Number, Street, City, State, and ZIP Code): One Shell Plaza, Box 2463, Houston, Texas 77001	
CHEMICAL NAME AND SYNONYMS: Toluene; Methyl Benzene	TRADE NAME: Shell Toluene
CHEMICAL FAMILY: Aromatic Hydrocarbon	FORMULA: $C_6H_5 - CH_3$

SECTION II HAZARDOUS INGREDIENTS*

COMPOSITION		SPECIES	LD_{50} ORAL	LD_{50} DERMAL	LD_{50} CONCENTRATION	LD_{50} HOURS
PIGMENTS						
CATALYST						
VEHICLE						
SOLVENTS	100	Rats	1.7 gm/kg		5,300 ppm	4
ADDITIVES		Rabbit		4 gm/kg		
OTHERS						

SECTION III PHYSICAL DATA

BOILING POINT (°F)	230-231	SPECIFIC GRAVITY (H_2O =) @ 60°F	0.871
VAPOR PRESSURE (mmHg) @ 68°F (20°C)	22	PERCENT VOLATILE BY VOLUME (%)	
VAPOR DENSITY (AIR=1)	3.2	EVAPORATION RATE n-BuAc =	2.0
SOLUBILITY IN WATER	Negligible		
APPEARANCE AND ODOR	Colorless liquid with aromatic odor.		

SECTION IV FIRE AND EXPLOSION HAZARD DATA

FLASH POINT (Method used): Tag Closed Cup - 41°F	FLAMMABLE LIMITS	LO 1.0 / UP 7.0
EXTINGUISHING MEDIA: Exclude air, use foam, CO_2, steam, water-fog, dry chemicals.		
SPECIAL FIRE FIGHTING PROCEDURES: Do not use water, exclude air. Consult local fire marshal.		
UNUSUAL FIRE AND EXPLOSION HAZARDS: Vapor forms explosive mixture with air between upper and lower explosive limits.		

MSDS-775

*Modified by Shell Oil Company

SECTION V HEALTH HAZARD DATA

THRESHOLD LIMIT VALUE
800 ppm

EFFECTS OF OVEREXPOSURE
Anesthesia - headache, nausea, dizziness, etc. Liquid moderately irritating to skin and eyes.

EMERGENCY AND FIRST AID PROCEDURES
Remove victim and restore breathing if required. Remove from skin with soap and water. Flush eyes with water.

SECTION VI REACTIVITY DATA

STABILITY		CONDITIONS TO AVOID
STABLE		
UNSTABLE	X	

INCOMPATIBILITY (Materials to avoid)
Not applicable

HAZARDOUS DECOMPOSITION PRODUCTS
CO, CO_2 when combusted

HAZARDOUS POLYMERIZATION			CONDITIONS TO AVOID
	MAY OCCUR		
	WILL NOT OCCUR	X	

SECTION VII SPILL OR LEAK PROCEDURES

STEPS TO BE TAKEN IN CASE MATERIAL IS RELEASED OR SPILLED
Avoid open flames or spark sources. Provide adequate ventilation.

WASTE DISPOSAL METHOD
Evaporate or flush with water to open, well-ventilated area. Use oil sewer if available. Remove to container.

SECTION VIII SPECIAL PROTECTION INFORMATION

RESPIRATORY PROTECTION (Specify type)
Organic canister mask or air pack.

VENTILATION	LOCAL EXHAUST	SPECIAL
	Desirable	
	MECHANICAL (General)	OTHER

PROTECTIVE GLOVES
Normally not required

EYE PROTECTION
Conventional eye cover to guard against unexpected splashing.

OTHER PROTECTIVE EQUIPMENT

SECTION IX SPECIAL PRECAUTIONS

PRECAUTIONS TO BE TAKEN IN HANDLING AND STORING
Avoid open flames and spark sources. Avoid splash-filling. Provide adequate ventilation. Avoid excessive heat.

OTHER PRECAUTIONS

NAME D. M. Sheets
TITLE Supervisor-Product Development-Resins
COMPANY Shell Chemical Company
SIGNATURE D. M. Sheets
DATE October, 1971

THE INFORMATION CONTAINED HEREIN IS BASED ON DATA CONSIDERED ACCURATE. HOWEVER, NO WARRANTY IS EXPRESSED OR IMPLIED REGARDING THE ACCURACY OF THESE DATA OR THE RESULTS TO BE OBTAINED FROM THE USE THEREOF.

SELLER ASSUMES NO RESPONSIBILITY FOR INJURY TO VENDEE OR THIRD PERSONS FROM MATERIAL UNDER THE MATERIAL IF REASONABLE SAFETY PROCEDURES ARE NOT ADHERED TO AS SUGGESTED IN THE DATA SHEET AND SELLER VENDEE ASSUMES ALL RESPONSIBILITY FOR INJURY TO VENDEE OR THIRD PERSONS RESULTING FROM ABNORMAL USE OF THE MATERIAL EVEN IF REASONABLE SAFETY PROCEDURES ARE FOLLOWED. IMPROPER USE VENDEE ASSUMES THE RISK OF USE OF THE MATERIAL.

TANK 15

Form No. OSHA-2

305

EXXON COMPANY, U.S.A.
A DIVISION OF EXXON CORPORATION

U.S. DEPARTMENT OF LABOR

Supersedes issue of 1/2/73

OCCUPATIONAL SAFETY AND HEALTH ADMINISTRATION

MATERIAL SAFETY DATA SHEET

DG-1P

SECTION I

MANUFACTURER'S NAME EXXON COMPANY, U.S.A. (A Division of Exxon Corporation)	EMERGENCY TELEPHONE NO. A.C. 713 Day 221-3424; Night 668-7024 622-1422
ADDRESS (Number, Street, City, State and ZIP Code) P. O. Box 2180 Houston, Texas 77001	TRADE NAME AND SYNONYMS VARSOL 18
CHEMICAL NAME AND SYNONYMS Petroleum Solvent	FORMULA Complex mixture of petroleum hydrocarbons.
CHEMICAL FAMILY Petroleum Hydrocarbon	

SECTION II HAZARDOUS INGREDIENTS

PAINTS, PRESERVATIVES, & SOLVENTS	%	TLV (Units)	ALLOYS AND METALLIC COATINGS	%	TLV (Units)
PIGMENTS		n.a.	BASE METAL		n.a.
CATALYST		n.a.	ALLOYS		n.a.
VEHICLE		n.a.	METALLIC COATINGS		n.a.
SOLVENTS	100	100 ppm	FILLER METAL PLUS COATING OR CORE FLUX		
ADDITIVES		n.a.	OTHERS		
OTHERS					

HAZARDOUS MIXTURES OF OTHER LIQUIDS, SOLIDS, OR GASES	%	TLV (Units)

SECTION III PHYSICAL DATA

BOILING POINT (°F) IBP - FBP	315-390	SPECIFIC GRAVITY (H_2O=1)	0.785
VAPOR PRESSURE (mm Hg.) @ 20°C	< 5 mm	PERCENT VOLATILE BY VOLUME (%)	100
VAPOR DENSITY (AIR =1)	4.8	EVAPORATION RATE (n-Butyl Acetate = 1)	0.09
SOLUBILITY IN WATER	Negligible		

APPEARANCE AND COLOR
Water white liquid. Mild mineral spirits odor.

SECTION IV FIRE AND EXPLOSION HAZARD DATA

FLAMMABLE LIMITS	Lel 0.9%	Uel 6.0%

FLASH POINT (Method used)
Tag Closed Cup 110°F

EXTINGUISHING MEDIA
Foam, dry chemical, CO_2, water spray or fog.

SPECIAL FIRE FIGHTING PROCEDURES
Use air-supplied rescue equipment for enclosed areas.
Cool exposed containers with water.

UNUSUAL FIRE AND EXPLOSION HAZARDS
Do not store or mix with strong oxidants.
Combustible liquid.

n.a. = not applicable

7/

SECTION V HEALTH HAZARD DATA

THRESHOLD LIMIT VALUE
100 ppm for 8-hour working day.

EFFECTS OF OVEREXPOSURE
Inhalation of high vapor concentrations may have results ranging from mild depression to convulsions and loss of consciousness.

EMERGENCY AND FIRST AID PROCEDURES
If overcome by vapor, remove from exposure immediately; call a physician. If swallowed do not induce vomiting; call a physician. If breathing is irregular or stopped, start resuscitation, administer oxygen. Remove contaminated clothing and wash skin with soap and water. Flush eyes with water until irritation subsides.

SECTION VI REACTIVITY DATA

STABILITY			CONDITIONS TO AVOID
	UNSTABLE		
	STABLE	X	

INCOMPATABILITY (Materials to avoid)
Strong oxidants like liquid chlorine and concentrated oxygen.

HAZARDOUS DECOMPOSITION PRODUCTS
Carbon monoxide in the case of incomplete combustion.

HAZARDOUS POLYMERIZATION			CONDITIONS TO AVOID
	MAY OCCUR		
	WILL NOT OCCUR	X	

SECTION VII SPILL OR LEAK PROCEDURES

STEPS TO BE TAKEN IN CASE MATERIAL IS RELEASED OR SPILLED
Remove all ignition sources. Keep people away. Recover free liquid. Add absorbent to spill area. Avoid breathing vapors. Ventilate enclosed spaces. Open all windows and doors. Keep petroleum products out of streams and waterways.

WASTE DISPOSAL METHOD
Incinerate absorbed material.

SECTION VIII SPECIAL PROTECTION INFORMATION

RESPIRATORY PROTECTION (Specify type)
Hydrocarbon vapor canister or supplied-air hose mask if needed.

VENTILATION		
	LOCAL EXHAUST: Face velocity > 60 fpm	SPECIAL: Use only with adequate* ventilation.
	MECHANICAL (General): Explosion-proof ventilation equipment	OTHER: No smoking or open lights.

PROTECTIVE GLOVES	EYE PROTECTION
Normally not needed.	Normally not needed.

OTHER PROTECTIVE EQUIPMENT
Hydrocarbon-insoluble apron if needed.

SECTION IX SPECIAL PRECAUTIONS

PRECAUTIONS TO BE TAKEN IN HANDLING AND STORING
Keep containers closed. Keep away from heat, sparks and open flame.

OTHER PRECAUTIONS
Avoid prolonged or repeated contact with skin. Remove contaminated clothing. Wash skin with soap and water after contact.

*Adequate means equivalent to outdoors ventilation.

James W. Hammond
Director of Industrial Hygiene

Wm. G. Domask, Ph.D., P.E.
Government Regulations Advisor

TANK 16 - 2

EXXON COMPANY, U.S.A.
A DIVISION OF EXXON CORPORATION

Form No. OSHA-2

U.S. DEPARTMENT OF LABOR

Supersedes issue of 1/2/7

OCCUPATIONAL SAFETY AND HEALTH ADMINISTRATION

MATERIAL SAFETY DATA SHEET

DG-1

SECTION I

MANUFACTURER'S NAME EXXON COMPANY, U.S.A. (A Division of Exxon Corporation)	EMERGENCY TELEPHONE NO. A.C. 71 Day 221-3424; Night 668-7024 622-1422
ADDRESS (Number, Street, City, State and ZIP Code) P. O. Box 2180 Houston, Texas 77001	
CHEMICAL NAME AND SYNONYMS Petroleum Solvent	TRADE NAME AND SYNONYMS VARSOL 1
CHEMICAL FAMILY Petroleum Hydrocarbon	FORMULA Complex mixture of petroleum hydrocarbons

SECTION II HAZARDOUS INGREDIENTS

PAINTS, PRESERVATIVES, & SOLVENTS	%	TLV (Units)	ALLOYS AND METALLIC COATINGS	%	TLV (Units)
PIGMENTS		n.a.	BASE METAL		n.a.
CATALYST		n.a.	ALLOYS		n.a.
VEHICLE		n.a.	METALLIC COATINGS		n.a.
SOLVENTS	100	100 ppm	FILLER METAL PLUS COATING OR CORE FLUX		n.a.
ADDITIVES		n.a.	OTHERS		
OTHERS					

HAZARDOUS MIXTURES OF OTHER LIQUIDS, SOLIDS, OR GASES	%	TLV (Units)

SECTION III PHYSICAL DATA

BOILING POINT (°F) IBP-FBP	315-395	SPECIFIC GRAVITY (H_2O=1) @60°F	0.797
VAPOR PRESSURE (mm Hg.) @ 20°C	< 5mm	PERCENT VOLATILE BY VOLUME (%)	100
VAPOR DENSITY (AIR =1)	4.83	EVAPORATION RATE (n-Butyl Acetate = 1)	0.08
SOLUBILITY IN WATER	Negligible		

APPEARANCE AND COLOR
Water-white color. Mineral spirits odor.

SECTION IV FIRE AND EXPLOSION HAZARD DATA

FLASH POINT (Method used)	FLAMMABLE LIMITS	Lel	Uel
Tag Closed Cup 108°F		0.9%	6.0%

EXTINGUISHING MEDIA
Foam, dry chemical, CO_2, water spray or fog.

SPECIAL FIRE FIGHTING PROCEDURES
Use air-supplied rescue equipment for enclosed areas.

Cool exposed containers with water.

UNUSUAL FIRE AND EXPLOSION HAZARDS
Do not store or mix with strong oxidants.

Combustible liquid.

n.a. = not applicable

7/22/7

SECTION V HEALTH HAZARD DATA

THRESHOLD LIMIT VALUE
100 ppm for 8-hour working day.

EFFECTS OF OVEREXPOSURE
Inhalation of high vapor concentrations may have results ranging from mild depression to convulsions and loss of consciousness.

EMERGENCY AND FIRST AID PROCEDURES
If overcome by vapor, remove from exposure immediately; call a physician. If swallowed do not induce vomiting; call a physician. If breathing is irregular or stopped, start resuscitation, administer oxygen. Remove contaminated clothing and wash skin with soap and water. Flush eyes with water until irritation subsides.

SECTION VI REACTIVITY DATA

STABILITY			CONDITIONS TO AVOID
	UNSTABLE		
	STABLE	X	

INCOMPATABILITY (Materials to avoid)
Strong oxidants like liquid chlorine and concentrated oxygen.

HAZARDOUS DECOMPOSITION PRODUCTS
Carbon monoxide in the case of incomplete combustion.

HAZARDOUS POLYMERIZATION			CONDITIONS TO AVOID
	MAY OCCUR		
	WILL NOT OCCUR	X	

SECTION VII SPILL OR LEAK PROCEDURES

STEPS TO BE TAKEN IN CASE MATERIAL IS RELEASED OR SPILLED
Remove all ignition sources. Keep people away. Recover free liquid. Add absorbent to spill area. Avoid breathing vapors. Ventilate enclosed spaces. Open all windows and doors. Keep petroleum products out of streams and waterways.

WASTE DISPOSAL METHOD
Incinerate absorbed material.

SECTION VIII SPECIAL PROTECTION INFORMATION

RESPIRATORY PROTECTION (Specify type)
Hydrocarbon vapor canister or supplied-air hose mask if needed.

VENTILATION	LOCAL EXHAUST	SPECIAL
	Face velocity > 60 fpm	Use only with adequate* ventilation.
	MECHANICAL (General)	OTHER
	Explosion-proof ventilation equipment	No smoking or open lights.

PROTECTIVE GLOVES	EYE PROTECTION
Normally not needed.	Normally not needed.

OTHER PROTECTIVE EQUIPMENT
Hydrocarbon-insoluble apron if needed.

SECTION IX SPECIAL PRECAUTIONS

PRECAUTIONS TO BE TAKEN IN HANDLING AND STORING
Keep containers closed. Keep away from heat, sparks and open flame.

OTHER PRECAUTIONS
Avoid prolonged or repeated contact with skin. Remove contaminated clothing. Wash skin with soap and water after contact.

*Adequate means equivalent to outdoors ventilation.

James W. Hammond
Director of Industrial Hygiene

Wm. G. Domask, Ph.D., P.E.
Government Regulations Advisor

EASTMAN KODAK COMPANY
APPROVED BY U.S. DEPARTMENT OF LABOR
"ESSENTIALLY SIMILAR" TO FORM OSHA-20

MATERIAL SAFETY DATA SHEET

SECTION I

PRODUCT NAME:	n-Butyl Acetate	SIZE:	Not applicable
CHEMICAL NAME:	Same		
FORMULA:	$CH_3COOC_4H_9$		
MANUFACTURER:	Marketed by Eastman Chemical Products, Inc.		
ADDRESS:	Kingsport, Tennessee 37662		
FOR INFORMATION ON HEALTH HAZARDS CALL:	615-247-0411, Extension 3613		
FOR OTHER INFORMATION CALL:	Same number as above Extension 4675	INFORMATION EFFECTIVE AS OF:	August, 1976

SECTION II HAZARDOUS INGREDIENTS OF MIXTURES

PRINCIPAL HAZARDOUS COMPONENT (S)	%	TLV (Units)
Not applicable		

SECTION III PHYSICAL DATA

BOILING POINT (°F.)	257°F (125°C)	SPECIFIC GRAVITY ($H_2O = 1$)	0.883 @ 20°/20°C
VAPOR PRESSURE (mm Hg.)	10 @ 20°C	PERCENT VOLATILE BY VOLUME (%)	>99
VAPOR DENSITY (AIR = 1)	4.01	EVAPORATION RATE (n-butyl acetate = 1)	1.0
SOLUBILITY IN WATER	Slight		
APPEARANCE AND ODOR	Clear liquid, fruity odor		

SECTION IV FIRE AND EXPLOSION HAZARD DATA

FLASH POINT (Method used)	81°F (27°C) TCC	FLAMMABLE LIMITS @ 100°F (38°C)	Lel	Uel
			1.38%	7.6%
EXTINGUISHING MEDIA	Carbon Dioxide, Dry Chemical			
SPECIAL FIRE FIGHTING PROCEDURES	Approved respirators should be worn.			
UNUSUAL FIRE AND EXPLOSION HAZARDS	None known to Eastman			

SECTION V HEALTH HAZARD DATA

THRESHOLD LIMIT VALUE	150 ppm
EFFECTS OF OVEREXPOSURE	Exposure to vapors may be irritating to eyes and respiratory passages. Prolonged exposure to high concentrations may lead to corneal irritation. Prolonged or repeated skin contact may result in defatting of skin.
EMERGENCY AND FIRST AID PROCEDURES	Skin and eye contact: Flush affected areas immediately and thoroughly with water.

SECTION VI REACTIVITY DATA

STABILITY	UNSTABLE		CONDITIONS TO AVOID
	STABLE	X	Not applicable

INCOMPATIBILITY (Materials to avoid)	Oxidizing materials can cause a reaction.
HAZARDOUS DECOMPOSITION PRODUCTS	As with any other organic material, combustion will produce carbon dioxide and probably carbon monoxide.

HAZARDOUS POLYMERIZATION		CONDITIONS TO AVOID
May Occur	Will Not Occur X	Not applicable

SECTION VII SPILL OR LEAK PROCEDURES

STEPS TO BE TAKEN IN CASE MATERIAL IS RELEASED OR SPILLED	Eliminate all ignition sources. Contain spill, wipe up with absorbent material for incineration.
WASTE DISPOSAL METHOD	Incineration

SECTION VIII SPECIAL PROTECTION INFORMATION

RESPIRATORY PROTECTION (Specify type)	Approved respirators should be worn if needed.

VENTILATION				
	LOCAL EXHAUST	X	SPECIAL	None known to Eastman
	MECHANICAL (general)	X	OTHER	None known to Eastman

PROTECTIVE GLOVES	X	EYE PROTECTION	Safety glasses should be worn in any type of industrial operation
OTHER PROTECTIVE EQUIPMENT	None should be needed		

SECTION IX SPECIAL PRECAUTIONS

PRECAUTIONS TO BE TAKEN IN HANDLING AND STORING	Keep away from heat, sparks, and open flame. Avoid prolonged breathing of vapor. Avoid prolonged or repeated contact with skin. Use with ventilation adequate to maintain vapor concentrations below the TLV of 150 ppm.
OTHER PRECAUTIONS	None known to Eastman

The information contained herein is furnished without warranty of any kind. Employers should use this information only as a supplement to other information gathered by them and must make independent determinations of suitability and completeness of information from all sources to assure proper use of these materials and the safety and health of employees.

DOW CHEMICAL U.S.A. MIDLAND MICHIGAN 48640 EMERGENCY PHONE: 517-636-4400

EFFECTIVE DATE: 16 MAY 79 PRODUCT CODE: 14728
PRODUCT (CONT'D): CARBON TETRACHLORIDE, TECHNICAL MSD: 0097

SECTION 5 HEALTH HAZARD DATA

INGESTION: LOW ACUTE ORAL TOXICITY IN RATS; LD50 2920 MG/KG; BUT MAY BE MODERATELY TOXIC TO HUMANS.
EYE CONTACT: TRANSIENT IRRITATION, BUT NO SIGNIFICANT CORNEAL INJURY.
SKIN CONTACT: SHORT SINGLE EXPOSURE - NO SIGNIFICANT IRRITATION. PROLONGED OR REPEATED EXPOSURES - UP TO MODERATE IRRITATION AND DRYING.
SKIN ABSORPTION: NOT READILY ABSORBED THROUGH THE SKIN. LD50 RABBITS GREATER THAN 2000 MG/KG.
INHALATION: OSHA GUIDE AND ACGIH TLV IS 10 PPM.
EFFECTS OF OVEREXPOSURE: DIZZINESS, INCOORDINATION, ANESTHESIA; MAY BE ACCOMPANIED BY NAUSEA, LIVER AND KIDNEY DAMAGE. CAN CAUSE DEATH IF TOO MUCH IS BREATHED.

SECTION 6 FIRST AID--NOTE TO PHYSICIAN

FIRST AID PROCEDURES:

EYES: IRRIGATE WITH FLOWING WATER IMMEDIATELY AND CONTINUOUSLY FOR FIFTEEN MINUTES. REFER TO MEDICAL PERSONNEL.
SKIN: IN CASE OF CONTACT, IMMEDIATELY FLUSH SKIN WITH PLENTY OF WATER FOR AT LEAST 15 MINUTES WHILE REMOVING CONTAMINATED CLOTHING. CALL A PHYSICIAN. WASH CLOTHING BEFORE REUSE. DESTROY CONTAMINATED SHOES.
INHALATION: REMOVE TO FRESH AIR IF EFFECTS OCCUR. CALL PHYSICIAN AND/OR TRANSPORT TO MEDICAL FACILITY. IF RESPIRATION STOPS, GIVE MOUTH-TO-MOUTH RESUSCITATION.
INGESTION: DO NOT INDUCE VOMITING. CALL A PHYSICIAN AND/OR TRANSPORT TO EMERGENCY FACILITY.

NOTE TO PHYSICIAN:
EYES: MAY CAUSE MILD IRRITATION. STAIN FOR EVIDENCE OF CORNEAL INJURY.
SKIN: MAY CAUSE MODERATE IRRITATION WITH PROLONGED EXPOSURE. CHRONIC EXPOSURE MAY CAUSE DEFATTING TYPE OF DERMATITIS. TREAT AS ANY CONTACT DERMATITIS. NOT LIKELY TO BE ABSORBED IN ACUTELY TOXIC AMOUNTS.
RESPIRATORY: MAY CAUSE DRUNKENNESS. ANESTHETIC OR NARCOTIC EFFECT MAY OCCUR. MAY CAUSE PULMONARY DAMAGE. MECHANICAL SUPPORT OF RESPIRATION MAY BE NEEDED. ADMINISTER OXYGEN IF AVAILABLE. BRONCHODILATORS, EXPECTORANTS, AND ANTITUSSIVES MAY BE OF HELP.
ORAL: MODERATELY TOXIC. MAY CAUSE CHEMICAL PNEUMONIA IF ASPIRATED INTO LUNGS. IF LAVAGE IS PERFORMED, SUGGEST ENDOTRACHEAL AND/OR ESOPHAGOSCOPIC CONTROL. MODERATELY TOXIC.
SYSTEMIC: MAY CAUSE NAUSEA OR VOMITING. MAY CAUSE SEVERE KIDNEY DAMAGE. MAY CAUSE SEVERE LIVER DAMAGE. MAY INCREASE MYOCARDIAL IRRITABILITY. AVOID EPINEPHRINE OR SIMILAR ACTING DRUGS IF AT ALL POSSIBLE. ALCOHOL CONSUMED BEFORE AND AFTER EXPOSURE MAY INCREASE INJURY. POTENTIALLY LETHAL. CONSULT STANDARD LITERATURE. NO SPECIFIC ANTIDOTE. TREATMENT BASED ON THE SOUND JUDGMENT OF THE PHYSICIAN AND THE INDIVIDUAL REACTIONS OF THE

(CONTINUED ON PAGE 3)
(R) INDICATES A REGISTERED OR TRADEMARK NAME OF THE DOW CHEMICAL COMPANY

SECTION 6 FIRST AID--NOTE TO PHYSICIAN (CONTINUED)

NOTE TO PHYSICIAN: (CONTINUED)
PATIENT. SOME ANIMAL STUDIES HAVE SHOWN THAT CCL4 CAN CAUSE LIVER TUMORS BY ORAL INGESTION AND INHALATION.

SECTION 7 SPECIAL HANDLING INFORMATION

VENTILATION: RECOMMEND CONTROL OF VAPORS TO SUGGESTED GUIDE.
RESPIRATORY PROTECTION: NIOSH APPROVED RESPIRATORY PROTECTION REQUIRED IN ABSENCE OF PROPER ENVIRONMENTAL CONTROL. FOR EMERGENCIES, A SELF-CONTAINED BREATHING APPARATUS OR A FULL-FACE RESPIRATOR AS APPROVED BY NIOSH IS RECOMMENDED.
PROTECTIVE CLOTHING: NONE REQUIRED. IF HAND PROTECTION IS REQUIRED, USE NEOPRENE OR POLYVINYLALCOHOL IMPREGNATED GLOVES.
EYE PROTECTION: SAFETY GLASSES WITHOUT SIDE SHIELDS.

SECTION 8 SPECIAL PRECAUTIONS AND ADDITIONAL INFORMATION

PRECAUTIONS TO BE TAKEN IN HANDLING AND STORAGE: AVOID PITS, DEPRESSIONS, AND BASEMENTS WHERE VAPORS MAY ACCUMULATE. STRONG CONSIDERATION SHOULD BE GIVEN TO AIR MONITORING SYSTEM WHERE MATERIAL IS STORED AND HANDLED ROUTINELY. AVOID EYE AND PROLONGED OR REPEATED SKIN CONTACT. DO NOT BREATHE VAPORS.
ADDITIONAL INFORMATION: REVISIONS 5/15/79 --- DISPOSAL METHOD, EFFECTS OF OVEREXPOSURE, ABSORPTION - LD50.

LAST PAGE

(R) INDICATES A REGISTERED OR TRADEMARK NAME OF THE DOW CHEMICAL COMPANY

THE INFORMATION HEREIN IS GIVEN IN GOOD FAITH, BUT NO WARRANTY, EXPRESSED OR IMPLIED, IS MADE.

M A T E R I A L S A F E T Y D A T A S H E E T PAGE: 1

DOW CHEMICAL U.S.A. MIDLAND MICHIGAN 48640 EMERGENCY PHONE: 517-636-4400

EFFECTIVE DATE: 03 OCT 80 PRODUCT CODE: 16820

PRODUCT NAME: CHLOROTHENE (R) NU SOLVENT MSD: 0030

INGREDIENTS (TYPICAL VALUES-NOT SPECIFICATIONS)	%
1,1,1-TRICHLOROETHANE (MINIMUM)	93.5

SECTION 1 PHYSICAL DATA

BOILING POINT: 165F (74C) : SOL. IN WATER: 0.07G/100G @ 25C
VAP PRESS: 100 MMHG @ 20C : SP. GRAVITY: 1.314 @ 25/25C
VAP DENSITY (AIR=1): 4.55 : % VOLATILE BY VOL: 100 (ESSEN.)
APPEARANCE AND ORDER: COLORLESS LIQUID.

SECTION 2 FIRE AND EXPLOSION HAZARD DATA

FLASH POINT: NONE : FLAMMABLE LIMITS (STP IN AIR)
METHOD USED: T.O.C.,T.C.C.,C.O.C. : LFL: 7.5% @ 25C UFL: 15% @ 25C
EXTINGUISHING MEDIA: WATER FOG
SPECIAL FIRE FIGHTING EQUIPMENT AND HAZARDS: SELF - CONTAINED RESPIRATORY EQUIPMENT. NOT CONSIDERED A FLAMMABLE LIQUID HAZARD UNDER NORMAL INDUSTRIAL USE CONDITIONS.

SECTION 3 REACTIVITY DATA

STABILITY: ----
INCOMBATIBILITY: WATER - SLOW HYDROLYSIS PRODUCES CORROSIVE ACID.
HAZARDOUS DECOMPOSITION PRODUCTS: HYDROGEN CHLORIDE AND VERY SMALL AMOUNTS OF PHOSGENE AND CHLORINE.
HAZARDOUS POLYMERIZATION: WILL NOT OCCUR.

SECTION 4 SPILL,LEAK,AND DISPOSAL PROCEDURES

ACTION TO TAKE FOR SPILLS (USE APPROPRIATE SAFETY EQUIPMENT): SMALL LEAKS: MOP UP, WIPE UP, OR SOAK UP IMMEDIATELY. REMOVE TO OUT OF DOORS. LARGE SPILLS: EVACUATE AREA. CONTAIN LIQUID; TRANSFER TO CLOSED METAL CONTAINERS. KEEP OUT OF WATER SUPPLY.
DISPOSAL METHOD: (IN ORDER OF PREFERENCE) SEND SOLVENT TO LICENSED RECLAIMER, INCINERATION, EVAPORATION OF VERY SMALL QUANTITIES, OR APPROVED LANDFILL BURIAL IN COMPLIANCE WITH LOCAL, STATE, AND FEDERAL REGULATIONS. DUMPING INTO SEWERS, ON THE GROUND, OR INTO ANY BODY OF WATER IS STRONGLY

(CONTINUED ON PAGE 2)
(R) INDICATES A REGISTERED OR TRADEMARK NAME OF THE DOW CHEMICAL COMPANY

EFFECTIVE DATE: 03 OCT 80 PRODUCT CODE: 16820
PRODUCT (CONT'D): CHLOROTHENE (R) NU SOLVENT MSD: 0030

SECTION 4 SPILL,LEAK,AND DISPOSAL PROCEDURES (CONTINUED)

DISPOSAL METHOD: (CONTINUED)
DISCOURAGED, AND MAY BE ILLEGAL.

SECTION 5 HEALTH HAZARD DATA

INGESTION: VERY LOW TOXICITY. LD50 (LABORATORY ANIMALS) RANGES FROM 8.6 TO 15.0 G/KG.
EYE CONTACT: MILD IRRITATION, BUT ESSENTIALLY NO CORNEAL INJURY.
SKIN CONTACT: SHORT CONTACT - NO IRRITATION. PROLONGED OR FREQUENT EXPOSURE - MINOR IRRITATIONS. IF CONFINED TO THE SKIN - UP TO MODERATE IRRITATION.
SKIN ABSORPTION: VERY LOW. LD50 (RABBITS) - 24 HOUR EXPOSURE GREATER THAN 15 G/KG.
INHALATION: OSHA GUIDE IS 350 PPM (1975).
EFFECTS OF OVEREXPOSURE: ANESTHETIC EFFECTS - MAY OCCUR IN THE RANGE OF 1000 PPM. CAN CAUSE DEATH IF TOO MUCH IS BREATHED.

SECTION 6 FIRST AID--NOTE TO PHYSICIAN

FIRST AID PROCEDURES:

EYES: IRRIGATION OF THE EYE IMMEDIATELY WITH WATER FOR FIVE MINUTES IS GOOD SAFETY PRACTICE.
SKIN: CONTACT WILL PROBABLY CAUSE NO MORE THAN IRRITATION. WASH OFF IN FLOWING WATER OR SHOWER. WASH CLOTHING BEFORE REUSE.
INHALATION: FAIREMOVE TO FRESH AIR IF EFFECTS OCCUR. CALL PHYSICIAN AND/OR TRANSPORT TO MEDICAL FACILITY. IF RESPIRATION STOPS, GIVE MOUTH-TO-MOUTH RESUSCITATION.
INGESTION: DO NOT INDUCE VOMITING. CALL A PHYSICIAN AND/OR TRANSPORT TO EMERGENCY FACILITY.
NOTE TO PHYSICIAN: EYES: MAY CAUSE CONJUNCTIVITIS. STAIN FOR EVIDENCE OF CORNEAL INJURY.
SKIN: MAY CAUSE MILD IRRITATION. CHRONIC EXPOSURE MAY CAUSE DEFATTING TYPE OF DERMATITIS. TREAT AS ANY CONTACT DERMATITIS. NOT LIKELY TO BE ABSORBED IN ACUTELY TOXIC AMOUNTS.
RESPIRATORY: ANESTHETIC OR NARCOTIC EFFECT MAY OCCUR. ADMINISTER OXYGEN IF AVAILABLE. BRONCHODILATORS, EXPECTORANTS, AND ANTITUSSIVES MAY BE OF HELP.
ORAL: LOW IN TOXICITY. MAY CAUSE REACTION SIMILAR TO PETROLEUM OR PETROLEUM LIKE SOLVENT. DANGER OF CHEMICAL PNEMONIA MUST BE WEIGHED AGAINST TOXICITY WHEN CONSIDERING EMPTYING THE STOMACH. IF LAVAGE IS PERFORMED, SUGGEST ENDOTRACHEAL AND/OR ESOPHAGOSCOPIC CONTROL.
SYSTEMIC: MAY INCREASE MYOCARDIAL IRRITABILITY. AVOID EPINEPHRINE

(CONTINUED ON PAGE 3)
(R) INDICATES A REGISTERED OR TRADEMARK NAME OF THE DOW CHEMICAL COMPANY

EFFECTIVE DATE: 03 OCT 80 PRODUCT CODE: 16820
PRODUCT (CONT'D): CHLOROTHENE (R) NU SOLVENT MSD: 0030

SECTION 6 FIRST AID--NOTE TO PHYSICIAN (CONTINUED)

NOTE TO PHYSICIAN: (CONTINUED)
OR SIMILAR ACTING DRUGS IF AT ALL POSSIBLE. CONSULT STANDARD LITERATURE. NO SPECIFIC ANTIDOTE. TREATMENT BASED ON THE SOUND JUDGMENT OF THE PHYSICIAN AND THE INDIVIDUAL REACTIONS OF THE PATIENT.

SECTION 7 SPECIAL HANDLING INFORMATION

VENTILATION: RECOMMEND CONTROL OF VAPORS TO SUGGESTED GUIDE.
RESPIRATORY PROTECTION: NONE NORMALLY NEEDED. APPROVED RESPIRATORY PROTECTION REQUIRED IN ABSENCE OF PROPER ENVIRONMENTAL CONTROL. FOR EMERGENCIES, A SELF-CONTAINED BREATHING APPARATUS OR A FULL-FACE RESPIRATOR IS RECOMMENDED. CARTRIDGE RESPIRATORS ARE NOT RECOMMENDED EXCEPT FOR EVACUATION.
PROTECTIVE CLOTHING: NO SPECIAL PROTECTIVE CLOTHING NEEDED.
EYE PROTECTION: SAFETY GLASSES WITHOUT SIDE SHIELDS. EYE-WASH STATIONS AND SAFETY SHOWERS SHOULD BE READILY AVAILABLE.

SECTION 8 SPECIAL PRECAUTIONS AND ADDITIONAL INFORMATION

PRECAUTIONS TO BE TAKEN IN HANDLING AND STORAGE: HANDLE WITH REASONABLE CARE. AVOID BREATHING VAPORS. STORE IN A COOL DRY PLACE. VAPORS OF THIS PRODUCT ARE HEAVIER THAN AIR AND WILL COLLECT IN LOW AREAS SUCH AS PITS, DEGREASERS, STORAGE TANKS, AND OTHER CONFINED AREAS. DO NOT ENTER THESE AREAS WHERE VAPORS OF THIS PRODUCT ARE SUSPECTED UNLESS SPECIAL BREATHING APPARATUS IS USED AND AN OBSERVER IS PRESENT FOR ASSISTANCE.

ADDITIONAL INFORMATION: 03 OCT 80 REVISIONS OF 24 SEP 79 -- DISPOSAL METHOD.

LAST PAGE
(R) INDICATES A REGISTERED OR TRADEMARK NAME OF THE DOW CHEMICAL COMPANY

THE INFORMATION HEREIN IS GIVEN IN GOOD FAITH, BUT NO WARRANTY, EXPRESS OR IMPLIED, IS MADE.

Occupational Safety and Health Administration

MATERIAL SAFETY DATA SHEET

Required under USDL Safety and Health Regulations for Ship Repairing, Shipbuilding, and Shipbreaking (29 CFR 1915, 1916, 1917)

CELANESE CHEMICAL COMPANY

SECTION I

MANUFACTURER'S NAME: CELANESE CHEMICAL COMPANY	EMERGENCY TELEPHONE NO: 512-584-3511
ADDRESS (Number, Street, City, State, and ZIP Code): 1211 AVE. OF AMERICAS, NEW YORK, N.Y. 10036	
CHEMICAL NAME AND SYNONYMS: Diacetone Alcohol (4-Hydroxy-4-Methyl-2-Pentanone)	TRADE NAME AND SYNONYMS: Diacetone Alcohol
CHEMICAL FAMILY: Ketone	FORMULA: $(CH_3)_2C(OH)CH_2COCH_3$

SECTION II – HAZARDOUS INGREDIENTS

	%	TLV (Units)		%	TLV (Units)

SECTION III – PHYSICAL DATA

BOILING POINT (°F): @ 760 mm Hg	336.6	SPECIFIC GRAVITY: @ 20°/20°C	0.9394
VAPOR PRESSURE (mm Hg): @ 20°C	1.1	PERCENT VOLATILE BY VOLUME:	None
VAPOR DENSITY (AIR = 1):	4.0	EVAPORATION RATE: Butyl Acetate = 1	0.14

SOLUBILITY IN WATER: Complete

APPEARANCE AND ODOR: Clear, colorless liquid; faint, pleasant odor

SECTION IV – FIRE AND EXPLOSION HAZARD DATA

FLASH POINT: 150°F, Tag Open Cup, 146°F, Tag Closed Cup	FLAMMABLE LIMITS:	LEL: 1.8%	UEL: 6.9%

EXTINGUISHING MEDIA: Dry chemical, carbon dioxide for small fires. "Alcohol" foam and water spray for large fires.

SPECIAL FIRE FIGHTING PROCEDURES: Dilution of burning liquid with water will reduce intensity of flame.

UNUSUAL FIRE AND EXPLOSION HAZARDS: None

SECTION V – HEALTH HAZARD DATA

THRESHOLD LIMIT VALUE: 50 ppm

EFFECTS OF OVEREXPOSURE: Irritating to eyes and mucous membranes. Narcotic in high concentration. Experimentally has caused anemia and damage to kidneys and liver.

EMERGENCY AND FIRST AID PROCEDURES: Remove to uncontaminated area. Remove all contaminated clothing immediately and wash affected areas with warm water and soap. Flush eyes with water for at least 10 minutes. Call a physician. Artificial respiration and oxygen should be given if necessary.

(Continued on reverse side)

SECTION VI – REACTIVITY DATA

PRODUCT IS [X] STABLE [ ] UNSTABLE

CONDITIONS TO AVOID
None

INCOMPATIBILITY (Materials to avoid)

Inorganic acids, caustics, amines, alkanol amines, pyridines, ammonia & isocyanates.

HAZARDOUS DECOMPOSITION PRODUCTS
Thermal decomposition products - carbon dioxide and carbon monoxide.

HAZARDOUS POLYMERIZATION [ ] MAY OCCUR [X] WILL NOT OCCUR

CONDITIONS TO AVOID
None

SECTION VII SPILL OR LEAK PROCEDURES

STEPS TO BE TAKEN IN CASE MATERIAL IS RELEASED OR SPILLED

Eliminate all ignition sources. Flush spill with water. Dike large spills and dump to salvage tanks or incinerate . Notify authorities in the event of major spills. Excessive quantities should not be permitted to enter drains where there is danger of vapors becoming ignited.

WASTE DISPOSAL METHOD

Chemical incinerator

SECTION VIII SPECIAL PROTECTION INFORMATION

RESPIRATORY PROTECTION

Wear self-contained breathing apparatus

VENTILATION

LOCAL EXHAUST
Preferable

MECHANICAL (General)
Acceptable

SPECIAL

OTHER

PROTECTIVE GLOVES
Impervious gloves

EYE PROTECTION
Chemical safety goggles

OTHER PROTECTIVE EQUIPMENT

Impervious apron and boots; eye bath and safety shower.

SECTION IX SPECIAL PRECAUTIONS

PRECAUTIONS TO BE TAKEN IN HANDLING AND STORING

Keep away form heat, sparks, and open flame. Avoid prolonged or repeated contact with skin.

OTHER PRECAUTIONS

None

WE HOPE THIS INFORMATION IS HELPFUL. BASED ON OUR BEST TECHNOLOGY IT IS FROM SOURCES WE REGARD AS EXPERT. SINCE USE CONDITIONS ARE NOT WITHIN OUR PRODUCT LINE OF CONTROL, THE USE OF THESE RECOMMENDATIONS, SUGGESTIONS AND/OR DATA IS AT THE RESPONSIBILITY AND INDEMNITY OF THE USER WITHOUT OBLIGATION OR LIABILITY OF ANY KIND ON THE PART OF CELANESE. THIS PUBLICATION IS NEITHER A LICENSE UNDER ANY APPLICABLE PATENTS NOR AN ASSURANCE OF FREEDOM FROM CLAIMS UNDER ANY PENDING OR ISSUED PATENT.

EASTMAN KODAK COMPANY
APPROVED BY U.S. DEPARTMENT OF LABOR
"ESSENTIALLY SIMILAR" TO FORM OSHA-20

MATERIAL SAFETY DATA SHEET

SECTION I

PRODUCT NAME: KODAFLEX® DBP Plasticizer	SIZE: Not applicable
CHEMICAL NAME: Dibutyl Phthalate	
FORMULA: $C_{16}H_{22}O_4$	
MANUFACTURER: Marketed by Eastman Chemical Products, Inc.	
ADDRESS: Kingsport, Tennessee 37662	
FOR INFORMATION ON HEALTH HAZARDS CALL: 615-247-0411, Extension 3613	
FOR OTHER INFORMATION CALL: Same number as above Extension 5109	INFORMATION EFFECTIVE AS OF: July, 1976

SECTION II HAZARDOUS INGREDIENTS OF MIXTURES

PRINCIPAL HAZARDOUS COMPONENT (S)	%	TLV (Units)
Not applicable		

SECTION III PHYSICAL DATA

BOILING POINT (°F.)	644°F (340°C)	SPECIFIC GRAVITY (H_2O = 1)	1.048
VAPOR PRESSURE (mm Hg.)	1.0 @ 298°F (147°C)	PERCENT VOLATILE BY VOLUME (%)	Not known
VAPOR DENSITY (AIR = 1)	9.6	EVAPORATION RATE (_____ = 1)	Not known
SOLUBILITY IN WATER	<0.03 g/liter		
APPEARANCE AND ODOR	Oily, colorless liquid; essentially odorless		

SECTION IV FIRE AND EXPLOSION HAZARD DATA

FLASH POINT (Method used)	375°F/190°C (COC)	FLAMMABLE LIMITS @ 456°F (236°C)	Lel	Uel
			0.47%	Not known
EXTINGUISHING MEDIA	Dry Chemical, Water Spray, CO_2			
SPECIAL FIRE FIGHTING PROCEDURES	None should be needed			
UNUSUAL FIRE AND EXPLOSION HAZARDS	None known			

ECP 2079-1F (5-76)

SECTION V HEALTH HAZARD DATA

THRESHOLD LIMIT VALUE	5 mg/m³
EFFECTS OF OVEREXPOSURE	None expected
EMERGENCY AND FIRST AID PROCEDURES	None should be needed

SECTION VI REACTIVITY DATA

STABILITY			CONDITIONS TO AVOID
	UNSTABLE		Not applicable
	STABLE	X	

INCOMPATIBILITY (Materials to avoid)	Avoid contact with strong oxidizers
HAZARDOUS DECOMPOSITION PRODUCTS	None known

HAZARDOUS POLYMERIZATION		CONDITIONS TO AVOID
May Occur	Will Not Occur X	Not applicable

SECTION VII SPILL OR LEAK PROCEDURES

STEPS TO BE TAKEN IN CASE MATERIAL IS RELEASED OR SPILLED	Remove all sources of ignition. Wear suitable protective clothing. Use absorbent material. Place in fiber drum and incinerate
WASTE DISPOSAL METHOD	Incineration

SECTION VIII SPECIAL PROTECTION INFORMATION

RESPIRATORY PROTECTION (Specify type)	None should be needed

VENTILATION					
	LOCAL EXHAUST	X	If needed to control vapor at elevated temperatures	SPECIAL	None known to Eastman
	MECHANICAL (general)		X	OTHER	None known to Eastman

PROTECTIVE GLOVES	None should be needed	EYE PROTECTION	Safety glasses should be worn in any type of industrial operation
OTHER PROTECTIVE EQUIPMENT	None should be needed		

SECTION IX SPECIAL PRECAUTIONS

PRECAUTIONS TO BE TAKEN IN HANDLING AND STORING	Use with ventilation adequate to maintain atmospheric concentrations below the TLV of 5 mg/m³.
OTHER PRECAUTIONS	None known to Eastman

The information contained herein is furnished without warranty of any kind. Employers should use this information only as a supplement to other information gathered by them and must make independent determinations of suitability and completeness of information from all sources to assure proper use of these materials and the safety and health of employees.

MATERIAL SAFETY DATA SHEET

DOW CHEMICAL U.S.A. MIDLAND MICHIGAN 48640 EMERGENCY PHONE: 517-636-4400

EFFECTIVE DATE: 27 JUN 80

PRODUCT CODE: 21100

MSD: 0069

PRODUCT NAME: DIETHANOLAMINE

INGREDIENTS (TYPICAL VALUES-NOT SPECIFICATIONS)	%
DIETHANOLAMINE, MIN.	99.0

SECTION 1 PHYSICAL DATA

BOILING POINT: 514F, 268C
VAP PRESS: LOW
VAP DENSITY (AIR=1): ----
APPEARANCE AND ODOR: COLORLESS, SL. AMMONIACAL LIQUID.

SOL. IN WATER: COMPLETELY MISCIBLE.
SP. GRAVITY: 1.08 @ 30/4C
% VOLATILE BY VOL: NOT APPLICABLE

SECTION 2 FIRE AND EXPLOSION HAZARD DATA

FLASH POINT: 342F, 172C
METHOD USED: PMCC

FLAMMABLE LIMITS (STP IN AIR)
LFL: NOT DETER. UFL: NOT DETER.

EXTINGUISHING MEDIA: WATER FOG, ALCOHOL FOAM, CO2, DRY CHEMICAL.
SPECIAL FIRE FIGHTING EQUIPMENT AND HAZARDS: NONE.

SECTION 3 REACTIVITY DATA

STABILITY: WILL IGNITE IN AIR AT 1224F, 662C.
INCOMPATIBILITY: OXIDIZING MATERIAL.
HAZARDOUS DECOMPOSITION PRODUCTS: ----
HAZARDOUS POLYMERIZATION: WILL NOT OCCUR.

SECTION 4 SPILL, LEAK, AND DISPOSAL PROCEDURES

ACTION TO TAKE FOR SPILLS (USE APPROPRIATE SAFETY EQUIPMENT): SOAK UP WITH ABSORBENT MATERIAL. SCOOP INTO DRUMS.
DISPOSAL METHOD: BURN ACCORDING TO FEDERAL, STATE AND LOCAL REGULATIONS.

SECTION 5 HEALTH HAZARD DATA

INGESTION: LOW SINGLE DOSE ORAL TOXICITY; LD50 (GUINEA PIGS) IN THE RANGE OF 2000 MG/KG, RAT 1820 MG/KG.
EYE CONTACT: MAY CAUSE SEVERE PAIN, IRRITATION AND INJURY.
SKIN CONTACT: SINGLE SHORT CONTACT - NO IRRITATION. REPEATED PROLONGED EXPOSURE - UP TO MODERATE IRRITATION, EVEN A MINOR BURN.
SKIN ABSORPTION: NOT LIKELY TO BE ABSORBED IN ACUTELY TOXIC AMOUNTS.
INHALATION: DOW INDUSTRIAL HYGIENE GUIDE AND ACGIH TLV IS 3 PPM.
EFFECTS OF OVEREXPOSURE: BAD ODOR AND IRRITATION OF NOSE AND EYES.

(CONTINUED ON PAGE 2)
(R) INDICATES A REGISTERED OR TRADEMARK NAME OF THE DOW CHEMICAL COMPANY

EFFECTIVE DATE: 27 JUN 80 PRODUCT CODE: 21100
PRODUCT (CONT'D): DIETHANOLAMINE MSD: 0069

SECTION 6 FIRST AID--NOTE TO PHYSICIAN

FIRST AID PROCEDURES:

EYES: IRRIGATE WITH FLOWING WATER IMMEDIATELY AND CONTINUOUSLY FOR 15 MINUTES. REFER TO MEDICAL PERSONNEL.
SKIN: IN CASE OF CONTACT, IMMEDIATELY FLUSH SKIN WITH PLENTY OF WATER FOR AT LEAST 15 MINUTES WHILE REMOVING CONTAMINATED CLOTHING AND SHOES. CALL A PHYSICIAN. WASH CLOTHING BEFORE REUSE. DISCARD CONTAMINATED SHOES.
INHALATION: REMOVE TO FRESH AIR IF EFFECTS OCCUR. CALL PHYSICIAN AND/OR TRANSPORT TO MEDICAL FACILITY.
INGESTION: IF SWALLOWED, INDUCE VOMITING IMMEDIATELY BY GIVING TWO GLASSES OF WATER AND STICKING FINGER DOWN THROAT. CALL A PHYSICIAN. (NEVER GIVE ANYTHING BY MOUTH TO AN UNCONSCIOUS PERSON).

NOTE TO PHYSICIAN:
EYES: MAY CAUSE CORNEAL INJURY OR BURN. STAIN FOR EVIDENCE OF CORNEAL INJURY. IF CORNEA IS BURNED, INSTILL ANTIBIOTIC STEROID PREPARATION FREQUENTLY. CONSULT OPHTHALMOLOGIST.
SKIN: MAY CAUSE MODERATE IRRITATION. MAY CAUSE BURN. TREAT AS ANY CONTACT DERMATITIS. IF BURN IS PRESENT, TREAT AS ANY THERMAL BURN.
RESPIRATORY: MAY CAUSE MODERATE IRRITATION. ADMINISTER OXYGEN IF AVAILABLE. BRONCHODILATORS, EXPECTORANTS, AND ANTITUSSIVES MAY BE OF HELP.
ORAL: LOW TO MODERATELY TOXIC.
GENERAL: HUMAN EFFECTS NOT ESTABLISHED. CONSULT STANDARD LITERATURE. NO SPECIFIC ANTIDOTE. TREATMENT BASED ON THE SOUND JUDGMENT OF THE PHYSICIAN AND THE INDIVIDUAL REACTIONS OF THE PATIENT.

SECTION 7 SPECIAL HANDLING INFORMATION

VENTILATION: RECOMMEND CONTROL OF VAPORS TO SUGGESTED GUIDE.
RESPIRATORY PROTECTION: NONE NORMALLY NEEDED. NIOSH APPROVED RESPIRATORY PROTECTION REQUIRED IN ABSENCE OF PROPER ENVIRONMENTAL CONTROL.
PROTECTIVE CLOTHING: CLEAN, BODY-COVERING CLOTHING. IN ADDITION, IMPERVIOUS GLOVES, BOOTS, APRON DEPENDING UPON THE EXTENT AND SEVERITY OF EXPOSURE LIKELY.
EYE PROTECTION: CHEMICAL WORKERS GOGGLES. EYE FOUNTAIN AND WASHING FACILITIES AT OR NEAR WORK AREA.

SECTION 8 SPECIAL PRECAUTIONS AND ADDITIONAL INFORMATION

(CONTINUED ON PAGE 3)
(R) INDICATES A REGISTERED OR TRADEMARK NAME OF THE DOW CHEMICAL COMPANY

EFFECTIVE DATE: 27 JUN 80
PRODUCT (CONT'D): DIETHANOLAMINE

PRODUCT CODE: 21100
MSD: 0069

SECTION 8 SPECIAL PRECAUTIONS AND ADDITIONAL INFORMATION (CONTINUED)

PRECAUTIONS TO BE TAKEN IN HANDLING AND STORAGE: AVOID EYE AND PROLONGED SKIN CONTACT. AVOID BREATHING VAPORS IF GENERATED.

ADDITIONAL INFORMATION: 27 JUN 80 REVISIONS OF 20 OCT 78 -- SECTIONS 1, 2, 3 AND 5.

LAST PAGE
(R) INDICATES A REGISTERED OR TRADEMARK NAME OF THE DOW CHEMICAL COMPANY

THE INFORMATION HEREIN IS GIVEN IN GOOD FAITH, BUT NO WARRANTY, EXPRESS OR IMPLIED, IS MADE.

MATERIAL SAFETY DATA SHEET

DOW CHEMICAL U.S.A. MIDLAND MICHIGAN 48640 EMERGENCY PHONE: 517-636-4400

EFFECTIVE DATE: 18 SEP 78 PRODUCT CODE: 21148

PRODUCT NAME: DIETHYLENE GLYCOL (REGULAR GRADE) MSD: 0070

INGREDIENTS (TYPICAL VALUES-NOT SPECIFICATIONS)	%
DIETHYLENE GLYCOL	99

SECTION 1 PHYSICAL DATA

BOILING POINT: 472.6F
VAP PRESS: < 0.01 MMHG @ 20C
VAP DENSITY (AIR=1): 2.14
SOL. IN WATER: COMPLETELY MISCIBLE
SP. GRAVITY: 1.118 @ 20/20C
% VOLATILE BY VOL: NOT APPLICABLE
APPEARANCE AND ODOR: COLORLESS, MILD, LIQUID.

SECTION 2 FIRE AND EXPLOSION HAZARD DATA

FLASH POINT: 255F
METHOD USED: PMCC
FLAMMABLE LIMITS (STP IN AIR)
LFL: NOT DETER. UFL: NOT DETER.
EXTINGUISHING MEDIA: WATER FOG, ALCOHOL FOAM, CO2, DRY CHEMICAL.
SPECIAL FIRE FIGHTING EQUIPMENT AND HAZARDS: NONE.

SECTION 3 REACTIVITY DATA

STABILITY: IGNITES IN AIR AT 444F.
INCOMPATIBILITY: OXIDIZING MATERIAL.
HAZARDOUS DECOMPOSITION PRODUCTS: ----
HAZARDOUS POLYMERIZATION: WILL NOT OCCUR.

SECTION 4 SPILL, LEAK, AND DISPOSAL PROCEDURES

ACTION TO TAKE FOR SPILLS (USE APPROPRIATE SAFETY EQUIPMENT): DAM TO PREVENT WATER POLLUTION. SOAK UP WITH ABSORBENT MATERIAL. USE VACUUM TRUCK TO RECOVER. RETURN TO PLANT FOR REPROCESSING.
DISPOSAL METHOD: BURN ACCORDING TO LOCAL, STATE, AND FEDERAL LAWS.

SECTION 5 HEALTH HAZARD DATA

INGESTION: LOW SINGLE DOSE ORAL TOXICITY FOR LAB ANIMALS; MODERATE FOR HUMANS.
EYE CONTACT: UP TO MILD IRRITATION.
SKIN CONTACT: ESSENTIALLY NON-IRRITATING.
SKIN ABSORPTION: ABSORBED THROUGH SKIN BUT LOW IN TOXICITY BY THIS ROUTE.

(CONTINUED ON PAGE 2)

(R) INDICATES A REGISTERED OR TRADEMARK NAME OF THE DOW CHEMICAL COMPANY

DOW CHEMICAL U.S.A. MIDLAND MICHIGAN 48640 EMERGENCY PHONE: 517-636-4400

EFFECTIVE DATE: 18 SEP 78 PRODUCT CODE: 21148
PRODUCT (CONT'D): DIETHYLENE GLYCOL (REGULAR GRADE) MSD: 0070

SECTION 5 HEALTH HAZARD DATA (CONTINUED)

INHALATION: NO GUIDE FOR CONTROL KNOWN. NOT LIKELY A PROBLEM BECAUSE OF LOW VOLATILITY. A LEVEL OF 100 PPM HAS BEEN SUGGETED AS A GUIDE IF MATERIAL IS HANDLED HOT.
EFFECTS OF OVEREXPOSURE: DEGENERATION OF THE KIDNEY AND TO A LESSER EXTENT THE LIVER.

SECTION 6 FIRST AID--NOTE TO PHYSICIAN

FIRST AID PROCEDURES:

EYES: IRRIGATION OF THE EYE IMMEDIATELY WITH WATER FOR 5 MINUTES IS GOOD SAFETY PRACTICE. CONSULT MEDICAL.
SKIN: WASH OFF IN FLOWING WATER. DECONTAMINATE CLOTHING AND ACCESSORIES BEFORE REUSE. GOOD PERSONAL HYGIENE.
INHALATION: REMOVE TO FRESH AIR IF EFFECTS OCCUR.
INGESTION: TOXIC BY INGESTION. INDUCE VOMITING IMMEDIATELY. CALL A PHYSICIAN AND/OR TRANSPORT TO EMERGENCY FACILITY.
NOTE TO PHYSICIAN: STAIN FOR EVIDENCE OF CORNEAL ABRASION OR INJURY. MAY CAUSE NEUROLOGIC SIGNS AND SYMPTOMS. MAY CAUSE KIDNEY DAMAGE. MAY CAUSE ELECTROLYTE IMBALANCE. SUGGEST BASELINE CBC, UA, AND 12 TEST. SUGGEST BASELINE ELECTROLYTES. CONSULT STANDARD LITERATURE. USE OF ALCOHOL MAY BE HELPFUL.

SECTION 7 SPECIAL HANDLING INFORMATION

VENTILATION: GOOD VENTILATION USUALLY ADEQUATE FOR MOST OPERATIONS.
RESPIRATORY PROTECTION: IF HANDLING HOT MATERIAL, CONTROL VAPORS TO 100 PPM OR LESS. NONE NORMALLY NEEDED.
PROTECTIVE CLOTHING: CLEAN CLOTHING.
EYE PROTECTION: NOT NORMALLY NECESSARY.

SECTION 8 SPECIAL PRECAUTIONS AND ADDITIONAL INFORMATION

PRECAUTIONS TO BE TAKEN IN HANDLING AND STORAGE: PRACTICE REASONABLE CAUTION TO AVOID SKIN AND EYE CONTACT. AVOID BREATHING VAPORS FROM HOT MATERIAL.
ADDITIONAL INFORMATION: ----

LAST PAGE

(R) INDICATES A REGISTERED OR TRADEMARK NAME OF THE DOW CHEMICAL COMPANY

THE INFORMATION HEREIN IS GIVEN IN GOOD FAITH, BUT NO WARRANTY, EXPRESSED OR IMPLIED, IS MADE.

M A T E R I A L S A F E T Y D A T A S H E E T

DOW CHEMICAL U.S.A. MIDLAND MICHIGAN 48640 EMERGENCY PHONE: 517-636-4400

EFFECTIVE DATE: 18 JUN 79

PRODUCT CODE: 21189

PRODUCT NAME: DIETHYLENETRIAMINE

MSD: 0071

INGREDIENTS (TYPICAL VALUES-NOT SPECIFICATIONS)	: % :
DIETHYLENETRIAMINE, MINIMUM	: 98.5 :

SECTION 1 PHYSICAL DATA

BOILING POINT: IBP-DP 199-207C : SOL. IN WATER: COMPLETELY MISCIBLE.
VAP PRESS: < 1 MMHG @ 20C : SP. GRAVITY: 0.947-0.951 25/25C
VAP DENSITY (AIR=1): 3.56 : % VOLATILE BY VOL: LOW VOLATILITY
APPEARANCE AND ODOR: COLORLESS TO LIGHT STRAW LIQUID - AMINE ODOR.

SECTION 2 FIRE AND EXPLOSION HAZARD DATA

FLASH POINT: 208F, 98C : FLAMMABLE LIMITS (STP IN AIR)
METHOD USED: PENSKY MARTENS C.C. : LFL: 2.0% @ 150C UFL: 6.7% @ 150C
EXTINGUISHING MEDIA: WATER FOG, ALCOHOL FOAM, CO2, DRY CHEMICAL.
SPECIAL FIRE FIGHTING EQUIPMENT AND HAZARDS: USE FULL PROTECTIVE CLOTHING (SEE SECTION 7) AND A SELF - CONTAINED BREATHING APPARATUS.

SECTION 3 REACTIVITY DATA

STABILITY: CAN AUTOIGNITE IN AIR AT APPROXIMATELY 676F, 358C.
INCOMPATIBILITY: ACID, OXIDIZING MATERIAL, CHLORINATED ORGANIC COMPOUNDS.
HAZARDOUS DECOMPOSITION PRODUCTS: NITROGEN OXIDES WHEN BURNED.
HAZARDOUS POLYMERIZATION: WILL NOT OCCUR.

SECTION 4 SPILL, LEAK, AND DISPOSAL PROCEDURES

ACTION TO TAKE FOR SPILLS (USE APPROPRIATE SAFETY EQUIPMENT): LARGE SPILL - DIKE UP AND DILUTE WITH COPIOUS QUANTITIES OF WATER. PUMP INTO APPROPRIATE CONTAINERS. SMALL SPILL - SOAK UP WITH ABSORBENT MATERIAL; SHOVEL INTO APPROPRIATE CONTAINERS.
DISPOSAL METHOD: LARGE QUANTITIES COULD BE RECOVERED. OTHERWISE, DISPOSE IN A LANDFILL IN ACCORDANCE WITH LOCAL REGULATIONS. KEEP OUT OF PUBLIC WATER SUPPLIES. THE DOW CHEMICAL COMPANY MAY BE CONTACTED FOR ADVICE.

(CONTINUED ON PAGE 2)
(R) INDICATES A REGISTERED OR TRADEMARK NAME OF THE DOW CHEMICAL COMPANY

SECTION 5 HEALTH HAZARD DATA

INGESTION: LOW SINGLE DOSE ORAL TOXICITY; LD50 (RATS) IS 1400 MG/KG.
INGESTION MAY CAUSE BURNS OF MOUTH, ESOPHAGUS AND POSSIBLY STOMACH.
EYE CONTACT: MAY CAUSE A SERIOUS BURN WITH POSSIBLE LOSS OF VISION.
SKIN CONTACT: BRIEF CONTACT (3-5 MINUTES) MAY CAUSE A SERIOUS BURN.
THIS MATERIAL MAY CAUSE SIGNIFICANT SENSITIZATION OR ALLERGENIC RESPONSE.
SKIN ABSORPTION: MAY BE ABSORBED IN MODERATELY TOXIC AMOUNTS.
INHALATION: ACGIH TLV IS 1 PPM (1978); 4 MG/CU METER (1978).
MAY CAUSE ALLERGENIC ASTHMA.
EFFECTS OF OVEREXPOSURE: DISAGREEABLE ODOR; IRRITATION OF EYES, NOSE, THROAT AND LUNGS. MAY CAUSE SENSITIZATION BY LIQUID OR VAPOR.

SECTION 6 FIRST AID--NOTE TO PHYSICIAN

FIRST AID PROCEDURES:

EYES: IMMEDIATE AND CONTINUOUS IRRIGATION WITH FLOWING WATER FOR AT LEAST 30 MINUTES IS IMPERATIVE. PROMPT MEDICAL CONSULTATION ESSENTIAL.
SKIN: SKIN BURN LIKELY. IMMEDIATE CONTINUOUS AND THOROUGH WASHING IN FLOWING WATER FOR 30 MINUTES IS INDICATED. REMOVE CLOTHING IMMEDIATELY. CALL PHYSICIAN AND/OR TRANSPORT TO MEDICAL FACILITY. DESTROY CONTAMINATED SHOES. WASH CLOTHING BEFORE REUSE.
INHALATION: REMOVE TO FRESH AIR IF EFFECTS OCCUR. CALL PHYSICIAN AND/OR TRANSPORT TO MEDICAL FACILITY.
INGESTION: CORROSIVE. DO NOT INDUCE VOMITING. GIVE LARGE AMOUNTS OF WATER OR MILK OF AVAILABLE AND TRANSPORT TO MEDICAL FACILITY.

NOTE TO PHYSICIAN:
EYES: MAY CAUSE SEVERE CORNEAL INJURY OR BURN. MAY CAUSE IMPAIRMENT OF VISION. STAIN FOR EVIDENCE OF CORNEAL INJURY. IF CORNEA IS BURNED, INSTILL ANTIBIOTIC STEROID PREPARATION FREQUENTLY. CONSULT OPHTHALMOLOGIST.
SKIN: MAY CAUSE SEVERE BURN. IF BURN IS PRESENT, TREAT AS ANY THERMAL BURN. MAY BE ABSORBED IN ACUTELY TOXIC AMOUNTS. KNOWN OR SUSPECTED SKIN SENSITIZER.
RESPIRATORY: MAY CAUSE SEVERE IRRITATION. ADMINISTER OXYGEN IF AVAILABLE. BRONCHODILATORS, EXPECTORANTS, AND ANTITUSSIVES MAY BE OF HELP. MAY CAUSE RESPIRATORY SENSITIZATION OR ASTHMA.
ORAL: MODERATELY TOXIC. MAY CAUSE BURN OF MUCOUS MEMBRANES. IF LAVAGE IS PERFORMED, SUGGEST ENDOTRACHEAL AND/OR ESOPHAGOSCOPIC CONTROL.
SYSTEMIC: CONSULT STANDARD LITERATURE. NO SPECIFIC ANTIDOTE. TREATMENT BASED ON SOUND JUDGMENT OF THE PHYSICIAN AND THE INDIVIDUAL REACTIONS OF THE PATIENT. RAT STUDIES INDICATE KIDNEY AND LIVER ARE TARGET ORGANS WITH OVEREXPOSURE.

(CONTINUED ON PAGE 3)
(R) INDICATES A REGISTERED OR TRADEMARK NAME OF THE DOW CHEMICAL COMPANY

U.S. DEPARTMENT OF LABOR
Occupational Safety & Health Administration
MATERIAL SAFETY DATA SHEET

SECTION I

MANUFACTURER'S NAME: E. I. DuPont de Nemours and Company	EMERGENCY TELEPHONE NO.: (302) 774-1000
ADDRESS (Number, Street, City, State, and ZIP Code): Freon® Products Division, Wilmington, Delaware 19898	
CHEMICAL NAME AND SYNONYMS: Trichlorotrifluoroethane and Acetone	TRADE NAME AND SYNONYMS: Freon® TA
CHEMICAL FAMILY: Halogenated Hydrocarbon	FORMULA: CCl_2FCClF_2 and CH_3COCH_3

SECTION II HAZARDOUS INGREDIENTS

PAINTS, PRESERVATIVES, & SOLVENTS	%	TLV (Units)	ALLOYS AND METALLIC COATINGS	%	TLV (Units)
PIGMENTS			BASE METAL		
CATALYST			ALLOYS		
VEHICLE			METALLIC COATINGS		
SOLVENTS Acetone	11	1000	FILLER METAL PLUS COATING OR CORE FLUX		
ADDITIVES			OTHERS		
OTHERS					

HAZARDOUS MIXTURES OF OTHER LIQUIDS, SOLIDS, OR GASES	%	TLV (Units)
None		

SECTION III PHYSICAL DATA

BOILING POINT (°F.)		110.5	SPECIFIC GRAVITY (H_2O=1) 77°F.	1.41
VAPOR PRESSURE (mm Hg.)	77°F.	380	PERCENT VOLATILE BY VOLUME (%)	100
VAPOR DENSITY (AIR=1)	77°F.	2.6	EVAPORATION RATE (CCl_4=1)	0.3
SOLUBILITY IN WATER	See Sect IV			
APPEARANCE AND ODOR	Colorless Liquid - faint solvent odor.			

SECTION IV FIRE AND EXPLOSION HAZARD DATA

FLASH POINT (Method used) None	FLAMMABLE LIMITS None	Lel	Uel
EXTINGUISHING MEDIA			
SPECIAL FIRE FIGHTING PROCEDURES			
UNUSUAL FIRE AND EXPLOSION HAZARDS	Addition of excess water (>0.2%) will extract acetone and may form a flammable, supernatant liquid layer.		

NOTICE FROM DU PONT

The data in this Material Safety Data Sheet relates only to the specific material designated herein and does not relate to use in combination with any other material or in any process.

SECTION V HEALTH HAZARD DATA

THRESHOLD LIMIT VALUE: 1000 ppm

EFFECTS OF OVEREXPOSURE: Light-headedness, shortness of breath, possible narcosis, possible cardiac arrhythmias at high concentrations.

EMERGENCY AND FIRST AID PROCEDURES: Inhalation: Remove to fresh air, call a physician. Do not give epinephrine or similar drugs.

Skin or Eye Contact: Flush with water.

SECTION VI REACTIVITY DATA

STABILITY			CONDITIONS TO AVOID
	UNSTABLE		Open flames or high temperatures.
	STABLE	X	

INCOMPATABILITY (Materials to avoid): Alkali or alkaline earth metals - powdered Al, Zn, Be, etc.

HAZARDOUS DECOMPOSITION PRODUCTS: Hydrochloric and hydrofluoric acids - possible phosgene.

HAZARDOUS POLYMERIZATION			CONDITIONS TO AVOID
	MAY OCCUR		
	WILL NOT OCCUR	X	

SECTION VII SPILL OR LEAK PROCEDURES

STEPS TO BE TAKEN IN CASE MATERIAL IS RELEASED OR SPILLED: Ventilate area - especially low places where heavy vapors might collect. Remove open flames.

WASTE DISPOSAL METHOD: Evaporate outdoors.

SECTION VIII SPECIAL PROTECTION INFORMATION

RESPIRATORY PROTECTION (Specify type): Use air mask in high concentrations.

VENTILATION		SPECIAL
	LOCAL EXHAUST: When large amounts are released.	OTHER
	MECHANICAL (General): Especially in low places	

PROTECTIVE GLOVES: When handling liquid.

EYE PROTECTION: When handling liquid.

OTHER PROTECTIVE EQUIPMENT:

SECTION IX SPECIAL PRECAUTIONS

PRECAUTIONS TO BE TAKEN IN HANDLING AND STORING: Store containers in a clean, dry area. Do not heat above 125°F.

OTHER PRECAUTIONS: For further information see Freon® Products Bulletins FST-5B, S-16, S-30.

U.S. DEPARTMENT OF LABOR

Occupational Safety & Health Administration

MATERIAL SAFETY DATA SHEET

SECTION I

MANUFACTURER'S NAME: E. I. du Pont de Nemours and Company	EMERGENCY TELEPHONE NO.: (302)-774-1000
ADDRESS (Number, Street, City, State, and ZIP Code): Freon® Products Division, Wilmington, Delaware 19898	
CHEMICAL NAME AND SYNONYMS: Trichlorotrifluoroethane + *	TRADE NAME AND SYNONYMS: Freon® T-DFC
CHEMICAL FAMILY: Halogenated hydrocarbon + *	FORMULA: CCl_2FCClF_2 + *

SECTION II HAZARDOUS INGREDIENTS

PAINTS, PRESERVATIVES, & SOLVENTS	%	TLV (Units)	ALLOYS AND METALLIC COATINGS	%	TLV (Units)
PIGMENTS	by wgt.		BASE METAL		
CATALYST			ALLOYS		
VEHICLE			METALLIC COATINGS		
SOLVENTS toluene	.07	ppm 100	FILLER METAL PLUS COATING OR CORE FLUX		
ADDITIVES surfactant*	.07		OTHERS		
OTHERS					

HAZARDOUS MIXTURES OF OTHER LIQUIDS, SOLIDS, OR GASES	%	TLV (Units)
* Quaternary ammonium alkyl phosphate - the TLV for the surfactant has not been established, however such low concentrations are not expected to significantly alter the properties of trichlorotrifluoroethane.		

SECTION III PHYSICAL DATA

BOILING POINT (°F.)		118	SPECIFIC GRAVITY (H_2O=1) 77°F	1.57
VAPOR PRESSURE (mm Hg.)	77°F	334	PERCENT VOLATILE BY VOLUME (%)	99.9+
VAPOR DENSITY (AIR=1)	77°F	2.90	EVAPORATION RATE (_____=1)	0.3
SOLUBILITY IN WATER	77°F % by wgt.	0.02		
APPEARANCE AND ODOR	Colorless liquid, slight ethereal odor			

SECTION IV FIRE AND EXPLOSION HAZARD DATA

FLASH POINT (Method used)	None	FLAMMABLE LIMITS	Lel	Uel
		None		
EXTINGUISHING MEDIA	Non-flammable			
SPECIAL FIRE FIGHTING PROCEDURES				
UNUSUAL FIRE AND EXPLOSION HAZARDS	None			

NOTICE FROM DU PONT

The data in this Material Safety Data Sheet relates only to the specific material designated herein and does not relate to use in combination with any other material or in any process.

SECTION V HEALTH HAZARD DATA

THRESHOLD LIMIT VALUE: 1000 ppm

EFFECTS OF OVEREXPOSURE: Lightheadedness, giddiness, shortness of breath, possible narcosis, possible cardiac arrhythmias at high concentrations.

EMERGENCY AND FIRST AID PROCEDURES

Inhalation: Remove to fresh air, call a physician, do not give epinephrine or similar drugs.

Eye contact: Flush copiously with water, call physician

Skin contact: Wash with soap and water.

SECTION VI REACTIVITY DATA

STABILITY			CONDITIONS TO AVOID
	UNSTABLE		Open flames or high temperatures
	STABLE	X	

INCOMPATABILITY (Materials to avoid): Alkaki or alkaline earth metals - powdered aluminum, zinc, beryllium etc.

HAZARDOUS DECOMPOSITION PRODUCTS: Hydrochloric and hydrofluoric acids - possible phosgene

HAZARDOUS POLYMERIZATION			CONDITIONS TO AVOID
	MAY OCCUR		
	WILL NOT OCCUR	X	

SECTION VII SPILL OR LEAK PROCEDURES

STEPS TO BE TAKEN IN CASE MATERIAL IS RELEASED OR SPILLED: Ventilate area - especially low places where heavy vapors might collect.

WASTE DISPOSAL METHOD: Evaporate outdoors

SECTION VIII SPECIAL PROTECTION INFORMATION

RESPIRATORY PROTECTION (Specify type): Use air mask with independent supply in high concentrations.

VENTILATION		
	LOCAL EXHAUST: When large amounts are released	SPECIAL
	MECHANICAL (General): Especially in low places	OTHER

PROTECTIVE GLOVES: When handling liquid

EYE PROTECTION: When handling liquid

OTHER PROTECTIVE EQUIPMENT

SECTION IX SPECIAL PRECAUTIONS

PRECAUTIONS TO BE TAKEN IN HANDLING AND STORING: Store containers in a clean dry area.

Do not heat above 125°F.

OTHER PRECAUTIONS: For further information see Freon® Products Laboratory Bulletin S-16.

U.S. DEPARTMENT OF LABOR

Occupational Safety & Health Administration

MATERIAL SAFETY DATA SHEET

SECTION I

MANUFACTURER'S NAME: E. I. duPont de Nemours and Company	EMERGENCY TELEPHONE NO.: (302) 774-1000
ADDRESS (Number, Street, City, State, and ZIP Code): Freon® Products Division, Wilmington, Delaware 19898	
CHEMICAL NAME AND SYNONYMS: Trichlorotrifluoroethane & Ethyl Alcohol	TRADE NAME AND SYNONYMS: Freon® TE
CHEMICAL FAMILY: Halogenated Hydrocarbon	FORMULA: CCl_2FCClF_2 & CH_3CH_2OH

SECTION II HAZARDOUS INGREDIENTS

PAINTS, PRESERVATIVES, & SOLVENTS	%	TLV (Units)	ALLOYS AND METALLIC COATINGS	%	TLV (Units)
PIGMENTS	-		BASE METAL	-	
CATALYST	-		ALLOYS	-	
VEHICLE	-		METALLIC COATINGS	-	
SOLVENTS Ethyl Alcohol	4.1	1000	FILLER METAL PLUS COATING OR CORE FLUX	-	
ADDITIVES Methyl Alcohol	0.4	200	OTHERS	-	
OTHERS	-			-	

HAZARDOUS MIXTURES OF OTHER LIQUIDS, SOLIDS, OR GASES	%	TLV (Units)
None		

SECTION III PHYSICAL DATA

BOILING POINT (°F.)		112.3	SPECIFIC GRAVITY (H_2O=1)	77°F	1.51
VAPOR PRESSURE (mm Hg.)	77°F	362	PERCENT VOLATILE BY VOLUME (%)		100
VAPOR DENSITY (AIR=1)	77°F	2.9	EVAPORATION RATE (CCl_4=1)		0.5
SOLUBILITY IN WATER	See Section IV				
APPEARANCE AND ODOR	Colorless liquid - faint solvent odor.				

SECTION IV FIRE AND EXPLOSION HAZARD DATA

FLASH POINT (Method used)	None	FLAMMABLE LIMITS	Lel	Uel
		None		

EXTINGUISHING MEDIA: Nonflammable

SPECIAL FIRE FIGHTING PROCEDURES

UNUSUAL FIRE AND EXPLOSION HAZARDS: Addition of excess water (>0.2%) will extract alcohol and may form a flammable, supernatant liquid layer.

NOTICE FROM DU PONT

The data in this Material Safety Data Sheet relates only to the specific material designated herein and does not relate to use in combination with any other material or in any process.

SECTION V HEALTH HAZARD DATA

THRESHOLD LIMIT VALUE: 1000 (estimated)

EFFECTS OF OVEREXPOSURE: Light-headedness, giddiness, shortness of breath, possible cardiac arrhythmias at high concentrations.

EMERGENCY AND FIRST AID PROCEDURES: Inhalation: Remove to fresh air, call a physician. Do not give epinephrine or similar drugs. Skin or eye contact: Flush with water.

SECTION VI REACTIVITY DATA

STABILITY			CONDITIONS TO AVOID
	UNSTABLE		Open flames or high temperatures.
	STABLE	X	

INCOMPATABILITY (Materials to avoid): Alkali or alkaline earth metals - powdered al, zinc, beryllium, etc.

HAZARDOUS DECOMPOSITION PRODUCTS: Hydrochloric and hydrofluoric acids - possible phosgene.

HAZARDOUS POLYMERIZATION			CONDITIONS TO AVOID
	MAY OCCUR		-
	WILL NOT OCCUR	X	

SECTION VII SPILL OR LEAK PROCEDURES

STEPS TO BE TAKEN IN CASE MATERIAL IS RELEASED OR SPILLED: Ventilate area - especially low places where heavy vapors might collect. Remove open flames.

WASTE DISPOSAL METHOD: Evaporate outdoors.

SECTION VIII SPECIAL PROTECTION INFORMATION

RESPIRATORY PROTECTION (Specify type): Use air mask in high concentrations.

VENTILATION		
	LOCAL EXHAUST: When large amounts are released.	SPECIAL
	MECHANICAL (General): Especially in low places.	OTHER

PROTECTIVE GLOVES: When handling liquid.

EYE PROTECTION: When handling liquid.

OTHER PROTECTIVE EQUIPMENT

SECTION IX SPECIAL PRECAUTIONS

PRECAUTIONS TO BE TAKEN IN HANDLING AND STORING: Store containers in a clean, dry area. Do not heat above 125°F.

OTHER PRECAUTIONS: For further information see Freon® Products Bulletins FST-5G, S-16, S-30.

U.S. DEPARTMENT OF LABOR
Occupational Safety & Health Administration
MATERIAL SAFETY DATA SHEET

SECTION I

MANUFACTURER'S NAME: E.I. DuPont de Nemours and Company	EMERGENCY TELEPHONE NO.: (302) 774-1000
ADDRESS (Number, Street, City, State, and ZIP Code): Freon® Products Division, Wilmington, Delaware 19898	
CHEMICAL NAME AND SYNONYMS: Trichlorotrifluoroethane Ethyl Alcohol/ Nitromethane	TRADE NAME AND SYNONYMS: Freon®. TES Solvent
CHEMICAL FAMILY: Halogenated Hydrocarbon/Solvent	FORMULA: $CCl_2FCClF_2/C_2H_5OH/CH_3NO_2$

SECTION II HAZARDOUS INGREDIENTS

PAINTS, PRESERVATIVES, & SOLVENTS	%	TLV (Units)	ALLOYS AND METALLIC COATINGS	%	TLV (Units)
PIGMENTS	-		BASE METAL	-	
CATALYST	-		ALLOYS	-	
VEHICLE	-		METALLIC COATINGS	-	
SOLVENTS Ethyl Alcohol	3.64	1000	FILLER METAL PLUS COATING OR CORE FLUX		
ADDITIVES *Inhibitor	1.06	100	OTHERS	-	
OTHERS	-			-	

HAZARDOUS MIXTURES OF OTHER LIQUIDS, SOLIDS, OR GASES	%	TLV (Units)
*Nitromethane, Boiling point 214°F.		

SECTION III PHYSICAL DATA

BOILING POINT (°F.)	111.9	SPECIFIC GRAVITY (H_2O=1) g/cc, 77°F	1.499
VAPOR PRESSURE (mm Hg.) @77°F	287	PERCENT VOLATILE BY VOLUME (%)	100
VAPOR DENSITY (AIR=1)	2.8	EVAPORATION RATE (_____=1)	-
SOLUBILITY IN WATER	0.3 wt. %		
APPEARANCE AND ODOR	Colorless liquid-faint solvent odor		

SECTION IV FIRE AND EXPLOSION HAZARD DATA

FLASH POINT (Method used) None	FLAMMABLE LIMITS None	LEL	UEL
EXTINGUISHING MEDIA Nonflammable			
SPECIAL FIRE FIGHTING PROCEDURES			
UNUSUAL FIRE AND EXPLOSION HAZARDS Addition of excess water (>0.2%) will extract alcohol and may form a flammable, supernatant liquid layer.			

NOTICE FROM DU PONT

The data in this Material Safety Data Sheet relates only to the specific material designated herein and does not relate to use in combination with any other material or in any process.

SECTION V HEALTH HAZARD DATA

THRESHOLD LIMIT VALUE: 750 (Calculated)

EFFECTS OF OVEREXPOSURE: Light-headedness, giddiness, shortness of breath, possible cardiac arrhythmias at high concentrations.

EMERGENCY AND FIRST AID PROCEDURES: Inhalation: Remove to fresh air, call a physician. Do not give epinephrine or similar drugs.

Skin or Eye Contact: Flush with water.

SECTION VI REACTIVITY DATA

STABILITY			CONDITIONS TO AVOID
	UNSTABLE		Open flames or high temperatures.
	STABLE	X	

INCOMPATIBILITY (Materials to avoid): Alkali or alkaline earth metals-powdered Al, Zn, Be, etc.

HAZARDOUS DECOMPOSITION PRODUCTS: Hydrochloric and hydrofluoric acids, possible phosgene.

HAZARDOUS POLYMERIZATION			CONDITIONS TO AVOID
	MAY OCCUR		
	WILL NOT OCCUR	X	

SECTION VII SPILL OR LEAK PROCEDURES

STEPS TO BE TAKEN IN CASE MATERIAL IS RELEASED OR SPILLED: Ventilate area-especially low places where heavy vapors might collect. Remove open flames.

WASTE DISPOSAL METHOD: Evaporate outdoors.

SECTION VIII SPECIAL PROTECTION INFORMATION

RESPIRATORY PROTECTION (Specify type): Use air mask in high concentrations.

VENTILATION		
	LOCAL EXHAUST: When large amounts are released.	SPECIAL
	MECHANICAL (General): Especially in low places.	OTHER

PROTECTIVE GLOVES: When handling liquid.

EYE PROTECTION: When handling liquid.

OTHER PROTECTIVE EQUIPMENT

SECTION IX SPECIAL PRECAUTIONS

PRECAUTIONS TO BE TAKEN IN HANDLING AND STORING: Store containers in a clean, dry area. Do not store above 125°F.

OTHER PRECAUTIONS: For further information see Freon® Products Bulletin S-30.

U.S. DEPARTMENT OF LABOR

Occupational Safety & Health Administration

MATERIAL SAFETY DATA SHEET

SECTION I

MANUFACTURER'S NAME: E. I. duPont de Nemours & Company	EMERGENCY TELEPHONE NO.: (302) 774-1000
ADDRESS (Number, Street, City, State, and ZIP Code): Freon® Products Division, Wilmington, Delaware 19898	
CHEMICAL NAME AND SYNONYMS: Trichlorotrifluoroethane	TRADE NAME AND SYNONYMS: Freon® TF
CHEMICAL FAMILY: Halogenated Hydrocarbon	FORMULA: CCl_2FCClF_2

SECTION II HAZARDOUS INGREDIENTS

PAINTS, PRESERVATIVES, & SOLVENTS	%	TLV (Units)	ALLOYS AND METALLIC COATINGS	%	TLV (Units)
PIGMENTS	-		BASE METAL	-	
CATALYST	-		ALLOYS	-	
VEHICLE	-		METALLIC COATINGS	-	
SOLVENTS	-		FILLER METAL PLUS COATING OR CORE FLUX	-	
ADDITIVES	-		OTHERS	-	
OTHERS	-			-	

HAZARDOUS MIXTURES OF OTHER LIQUIDS, SOLIDS, OR GASES	%	TLV (Units)
None		

SECTION III PHYSICAL DATA

BOILING POINT (°F.)		117.6	SPECIFIC GRAVITY (H_2O=1) 77°F	1.57
VAPOR PRESSURE (mm Hg.)	77°F	334	PERCENT VOLATILE BY VOLUME (%)	100
VAPOR DENSITY (AIR=1)	77°F	2.9	EVAPORATION RATE (CCl4 =1)	0.3
SOLUBILITY IN WATER	77°F, % by wt.	0.02		
APPEARANCE AND ODOR	Colorless liquid - slight ethereal odor.			

SECTION IV FIRE AND EXPLOSION HAZARD DATA

FLASH POINT (Method used) None	FLAMMABLE LIMITS None	Lel	Uel
EXTINGUISHING MEDIA	Nonflammable		
SPECIAL FIRE FIGHTING PROCEDURES			
UNUSUAL FIRE AND EXPLOSION HAZARDS	None		

NOTICE FROM DU PONT

The data in this Material Safety Data Sheet relates only to the specific material designated herein and does not relate to use in combination with any other material or in any process.

SECTION V HEALTH HAZARD DATA

THRESHOLD LIMIT VALUE
1000 ppm.

EFFECTS OF OVEREXPOSURE
Light-headedness, giddiness, shortness of breath, possible narcosis, possible cardiac arrhythmias at high concentrations.

EMERGENCY AND FIRST AID PROCEDURES
Inhalation: Remove to fresh air, call a physician. Do not give epinephrine or similar drugs.
Skin or eye contact: Flush with water.

SECTION VI REACTIVITY DATA

STABILITY			CONDITIONS TO AVOID
	UNSTABLE		Open flames or high temperatures.
	STABLE	X	

INCOMPATABILITY (Materials to avoid)
Alkali or alkaline earch metals - powdered Al, Zinc, Beryllium, etc.

HAZARDOUS DECOMPOSITION PRODUCTS
Hydrochloric and hydrofluoric acids - possible phosgene.

HAZARDOUS POLYMERIZATION			CONDITIONS TO AVOID
	MAY OCCUR		
	WILL NOT OCCUR	X	

SECTION VII SPILL OR LEAK PROCEDURES

STEPS TO BE TAKEN IN CASE MATERIAL IS RELEASED OR SPILLED
Ventilate area - especially low places where heavy vapors might collect. Remove open flames.

WASTE DISPOSAL METHOD
Evaporate outdoors.

SECTION VIII SPECIAL PROTECTION INFORMATION

RESPIRATORY PROTECTION (Specify type)
Use air mask in high concentrations.

VENTILATION	LOCAL EXHAUST	SPECIAL
	When large amounts are released.	
	MECHANICAL (General)	OTHER
	Especially in low places.	

PROTECTIVE GLOVES	EYE PROTECTION
When handling liquid.	When handling liquid.

OTHER PROTECTIVE EQUIPMENT

SECTION IX SPECIAL PRECAUTIONS

PRECAUTIONS TO BE TAKEN IN HANDLING AND STORING
Store containers in a clean, dry, area. Do not heat above 125°F.

OTHER PRECAUTIONS
For further information see Freon® Products Bulletins FST-1, S-16, S-24, S-30.

U.S. DEPARTMENT OF LABOR

Occupational Safety & Health Administration

MATERIAL SAFETY DATA SHEET

SECTION I

MANUFACTURER'S NAME: E. I. DuPont de Nemours and Company	EMERGENCY TELEPHONE NO.: (302) 774-1000
ADDRESS (Number, Street, City, State, and ZIP Code): Freon® Products Division, Wilmington, Delaware 19898	
CHEMICAL NAME AND SYNONYMS: Trichlorotrifluoroethane & Methylene Chloride	TRADE NAME AND SYNONYMS: Freon® TMC
CHEMICAL FAMILY: Halogenated Hydrocarbon	FORMULA: CCl_2FCClF_2 and CH_2Cl_2

SECTION II HAZARDOUS INGREDIENTS

PAINTS, PRESERVATIVES, & SOLVENTS	%	TLV (Units)	ALLOYS AND METALLIC COATINGS	%	TLV (Units)
PIGMENTS		-	BASE METAL		-
CATALYST		-	ALLOYS		-
VEHICLE		-	METALLIC COATINGS		-
SOLVENTS Methylene Chloride	50	100 ppm 200*	FILLER METAL PLUS COATING OR CORE FLUX		-
ADDITIVES		-	OTHERS		-
OTHERS		-			-

HAZARDOUS MIXTURES OF OTHER LIQUIDS, SOLIDS, OR GASES	%	TLV (Units)
* Intended change for 1975		

SECTION III PHYSICAL DATA

BOILING POINT (°F.)		97.7	SPECIFIC GRAVITY (H_2O=1) 77°F	1.42
VAPOR PRESSURE (mm HG.)	77°F	500	PERCENT VOLATILE BY VOLUME (%)	100
VAPOR DENSITY (AIR=1)	77°F	2.7	EVAPORATION RATE (_____=1)	0.3
SOLUBILITY IN WATER		Slight		
APPEARANCE AND ODOR				

SECTION IV FIRE AND EXPLOSION HAZARD DATA

FLASH POINT (Method used)	None	FLAMMABLE LIMITS None	LEL	UEL
EXTINGUISHING MEDIA	Nonflammable			
SPECIAL FIRE FIGHTING PROCEDURES				
UNUSUAL FIRE AND EXPLOSION HAZARDS	None			

NOTICE FROM DU PONT

The data in this Material Safety Data Sheet relates only to the specific material designated herein and does not relate to use in combination with any other material or in any process.

SECTION V HEALTH HAZARD DATA

THRESHOLD LIMIT VALUE: 140 (est'd)* 270 (est'd)** TWA 600 (est'd)***

EFFECTS OF OVEREXPOSURE: Light-headedness, shortness of breath, possible narcosis, possible cardiac arrhythmias at high concentrations.

EMERGENCY AND FIRST AID PROCEDURES: Inhalation: Remove to fresh air, call a physician. Do not give epinephrine or similar drugs.

Skin or eye contact: Flush with water.

SECTION VI REACTIVITY DATA

STABILITY			CONDITIONS TO AVOID
	UNSTABLE		Open flames or high temperatures
	STABLE	X	

INCOMPATABILITY (Materials to avoid): Alkali or alkaline earth metals - pdrd. al, zinc, beryllium, etc.

HAZARDOUS DECOMPOSITION PRODUCTS: Hydrochloric and hydrofluoric acids - possible phosgene

HAZARDOUS POLYMERIZATION			CONDITIONS TO AVOID
	MAY OCCUR		
	WILL NOT OCCUR	X	

SECTION VII SPILL OR LEAK PROCEDURES

STEPS TO BE TAKEN IN CASE MATERIAL IS RELEASED OR SPILLED: Ventilate area - especially low places where heavy vapors might collect. Remove open flames.

WASTE DISPOSAL METHOD: Evaporate outdoors.

SECTION VIII SPECIAL PROTECTION INFORMATION

RESPIRATORY PROTECTION (Specify type): Use air mask in high concentrations

VENTILATION		
	LOCAL EXHAUST: When large amounts are released	SPECIAL
	MECHANICAL (General): Especially in low places	OTHER

PROTECTIVE GLOVES: When handling liquid

EYE PROTECTION: When handling liquid

OTHER PROTECTIVE EQUIPMENT

SECTION IX SPECIAL PRECAUTIONS

PRECAUTIONS TO BE TAKEN IN HANDLING AND STORING: Store containers in a clean, dry, area. Do not heat above 125°F.

OTHER PRECAUTIONS: For further information see Freon® Products bulletins FST-5A, S-16, S-30.

* If TLV for CH_2Cl_2 is 100,
** If TLV for CH_2Cl_2 is 200,
*** Federal Register Vol. 36, No. 105, May 29, 1971

U.S. DEPARTMENT OF LABOR

Occupational Safety & Health Administration

MATERIAL SAFETY DATA SHEET

SECTION I

MANUFACTURER'S NAME: E. I. DuPont de Nemours and Company	EMERGENCY TELEPHONE NO.: (302) 774-1000
ADDRESS (Number, Street, City, State, and ZIP Code): Freon® Products Division, Wilmington, Delaware 19898	
CHEMICAL NAME AND SYNONYMS: Trichlorotrifluoroethane/Methyl alcohol/Nitromethane	NAME AND SYNONYMS: Freon® TMS Solvent
CHEMICAL FAMILY: Halogenated Hydrocarbon/Solvent	FORMULA: $CCl_2FCClF_2/CH_3OH/CH_3NO_2$

SECTION II HAZARDOUS INGREDIENTS

PAINTS, PRESERVATIVES, & SOLVENTS	%	TLV (Units)	ALLOYS AND METALLIC COATINGS	%	TLV (Units)
PIGMENTS	-		BASE METAL	-	
CATALYST	-		ALLOYS	-	
VEHICLE	-		METALLIC COATINGS	-	
SOLVENTS Methyl Alcohol	5.5	200	FILLER METAL PLUS COATING OR CORE FLUX	-	
ADDITIVES *Inhibitor	0.2	100	OTHERS	-	
OTHERS	-			-	

HAZARDOUS MIXTURES OF OTHER LIQUIDS, SOLIDS, OR GASES	%	TLV (Units)
*Nitromethane, Boiling point 214°F.		

SECTION III PHYSICAL DATA

BOILING POINT (°F.)	103.3	SPECIFIC GRAVITY (H_2O=1) g/cc. 77°F Calc.	1.52
VAPOR PRESSURE (mm Hg.) Calculated, 77°F.	273	PERCENT VOLATILE BY VOLUME (%)	100
VAPOR DENSITY (AIR=1) Calculated	2.8	EVAPORATION RATE (_____=1)	N.D.
SOLUBILITY IN WATER Est.	<0.5%		

APPEARANCE AND ODOR: Colorless liquid-faint solvent odor.

SECTION IV FIRE AND EXPLOSION HAZARD DATA

FLASH POINT (Method used) None	FLAMMABLE LIMITS None	Lel.	Uel

EXTINGUISHING MEDIA: Noneflammable

SPECIAL FIRE FIGHTING PROCEDURES

UNUSUAL FIRE AND EXPLOSION HAZARDS: Addition of excess water (>0.2%) will extract alcohol and may form a flammable, supernatant liquid layer.

NOTICE FROM DU PONT

The data in this Material Safety Data Sheet relates only to the specific material designated herein and does not relate to use in combination with any other material or in any process.

SECTION V HEALTH HAZARD DATA

THRESHOLD LIMIT VALUE: 480 (Calculated)

EFFECTS OF OVEREXPOSURE: Light-headedness, giddiness, shortness of breath, possible cardiac arrhythmias at high concentrations.

EMERGENCY AND FIRST AID PROCEDURES: Inhalation: Remove to fresh air, call a physician. Do not give epinephrine or similar drugs.

Skin or Eye Contact: Flush with water.

SECTION VI REACTIVITY DATA

STABILITY			CONDITIONS TO AVOID
	UNSTABLE		Open flames or high temperatures.
	STABLE	X	

INCOMPATABILITY (Materials to avoid): Alkali or alkaline earth metals-powdered Al, Zn, Be, etc.

HAZARDOUS DECOMPOSITION PRODUCTS: Hydrochloric and hydrofluoric acids-possible phosgene.

HAZARDOUS POLYMERIZATION			CONDITIONS TO AVOID
	MAY OCCUR		
	WILL NOT OCCUR	X	

SECTION VII SPILL OR LEAK PROCEDURES

STEPS TO BE TAKEN IN CASE MATERIAL IS RELEASED OR SPILLED: Ventilate area-especially low places where heavy vapors might collect. Remove open flames.

WASTE DISPOSAL METHOD: Evaporate outdoors.

SECTION VIII SPECIAL PROTECTION INFORMATION

RESPIRATORY PROTECTION (Specify type): Use air mask in high concentrations.

VENTILATION		
	LOCAL EXHAUST: When large amounts are released.	SPECIAL
	MECHANICAL (General): Especially in low places.	OTHER

PROTECTIVE GLOVES: When handling liquid.

EYE PROTECTION: When handling liquid.

OTHER PROTECTIVE EQUIPMENT

SECTION IX SPECIAL PRECAUTIONS

PRECAUTIONS TO BE TAKEN IN HANDLING AND STORING: Store containers in a clean, dry area. Do not store above 125°F.

OTHER PRECAUTIONS: For further information see Freon® Products Bulletin S-30.

M A T E R I A L S A F E T Y D A T A S H E E T

DOW CHEMICAL U.S.A. MIDLAND MICHIGAN 48640 EMERGENCY PHONE: 517-636-4400

EFFECTIVE DATE: 26 SEP 79 PRODUCT CODE: 56530

PRODUCT NAME: NEU-TRI (R) SOLVENT MSD: 0168

INGREDIENTS (TYPICAL VALUES-NOT SPECIFICATIONS)	%
TRICHLOROETHYLENE (MINIMUM)	95

SECTION 1 PHYSICAL DATA

BOILING POINT: 189F (87C)
VAP PRESS: 60 MMHG @ 20C
VAP DENSITY (AIR=1): 4.53
SOL. IN WATER: 0.1 G/100G @ 25C
SP. GRAVITY: 1.46 @ 25/25C
% VOLATILE BY VOL: 100 (ESSENTIALLY)
APPEARANCE AND ODOR: COLORLESS LIQUID.

SECTION 2 FIRE AND EXPLOSION HAZARD DATA

FLASH POINT: NONE
METHOD USED: TCC
FLAMMABLE LIMITS (STP IN AIR)
LFL: 7.8VOL% 100C UFL: 52 VOL% 100C
8.0 VOL% 25C 10.5 VOL% 25C
EXTINGUISHING MEDIA: WATER FOG.
SPECIAL FIRE FIGHTING EQUIPMENT AND HAZARDS: PRESSURE DEMAND SELF-CONTAINED RESPIRATORY PROTECTION. STRONG UNPLEASANT ODOR. NOT CONSIDERED A FLAMMABLE LIQUID UNDER NORMAL INDUSTRIAL USE CONDITIONS. AUTOIGNITION TEMPERATURE IS 788F, 420C.

SECTION 3 REACTIVITY DATA

STABILITY: AVOID OPEN FLAMES, WELDING ARCS, OR OTHER HIGH TEMPERATURE SOURCES WHICH INDUCE THERMAL DECOMPOSITION.
INCOMPATIBILITY: STRONG BASES: CAUSTIC SODA, CAUSTIC POTASH.
HAZARDOUS DECOMPOSITION PRODUCTS: INVOLVEMENT IN FIRE FORMS HYDROGEN CHLORIDE AND VERY SMALL AMOUNTS OF PHOSGENE & CHLORINE.
HAZARDOUS POLYMERIZATION: WILL NOT OCCUR.

SECTION 4 SPILL, LEAK, AND DISPOSAL PROCEDURES

ACTION TO TAKE FOR SPILLS (USE APPROPRIATE SAFETY EQUIPMENT): SMALL SPILLS: MOP UP, WIPE UP OR SOAK UP IMMEDIATELY. REMOVE TO OUT OF DOORS. LARGE SPILLS: EVACUATE AREA. CONTAIN LIQUID; TRANSFER TO CLOSED METAL CONTAINERS. KEEP OUT OF WATER SUPPLY.
DISPOSAL METHOD: SEND SOLVENT TO A RECLAIMER. IN SOME CASES, SMALL AMOUNTS MAY BE TRANSPORTED TO AN AREA WHERE IT CAN BE PLACED ON THE GROUND AND ALLOWED TO EVAPORATE SAFELY IF LOCAL, STATE AND FEDERAL REGULATIONS PERMIT.

(CONTINUED ON PAGE 2)
(R) INDICATES A REGISTERED OR TRADEMARK NAME OF THE DOW CHEMICAL COMPANY

MATERIAL SAFETY DATA SHEET

DOW CHEMICAL U.S.A. MIDLAND MICHIGAN 48640 EMERGENCY PHONE: 517-636-4400

EFFECTIVE DATE: 26 SEP 79
PRODUCT (CONT'D): NEU-TRI (R) SOLVENT

PRODUCT CODE: 56530
MSD: 0168

SECTION 5 HEALTH HAZARD DATA

INGESTION: LOW ACUTE ORAL TOXICITY IN RATS, LD50 > 4 G/KG. BUT MAY BE MODERATELY TOXIC IN HUMANS.
EYE CONTACT: PAIN AND IRRITATION, BUT NO (OR ONLY MINOR) CORNEAL INJURY LIKELY.
SKIN CONTACT: SHORT CONTACT - NO IRRITATION. PROLONGED OR REPEATED CONTACT - MODERATE IRRITATION AND DRYING MAY OCCUR. IF CONFINED TO SKIN - PAIN AND A BURN.
SKIN ABSORPTION: VERY LOW TOXICITY; NOT A HAZARD.
INHALATION: ACGIH TLV AND OSHA GUIDE IS 100 PPM.
EFFECTS OF OVEREXPOSURE: ANESTHESIA. PROLONGED OR REPEATED EXPOSURES TO LEVELS OVER 100 PPM - POSSIBLE ORGANIC INJURY. CAN CAUSE DEATH IF TOO MUCH IF BREATHED.

SECTION 6 FIRST AID--NOTE TO PHYSICIAN

FIRST AID PROCEDURES:

EYES: IRRIGATE WITH FLOWING WATER IMMEDIATELY AND CONTINUOUSLY FOR FIFTEEN MINUTES. REFER TO MEDICAL PERSONNEL.
SKIN: IN CASE OF CONTACT, IMMEDIATELY FLUSH SKIN WITH PLENTY OF WATER FOR AT LEAST 15 MINUTES WHILE REMOVING CONTAMINATED CLOTHING. CALL A PHYSICIAN. WASH CLOTHING BEFORE REUSE.
INHALATION: REMOVE TO FRESH AIR IF EFFECTS OCCUR. IF RESPIRATION STOPS, GIVE MOUTH-TO-MOUTH RESUSCITATION. CALL PHYSICIAN AND/OR TRANSPORT TO MEDICAL FACILITY.
INGESTION: DO NOT INDUCE VOMITING. CALL A PHYSICIAN OR TRANSPORT TO EMERGENCY FACILITY.

NOTE TO PHYSICIAN:
EYES: MAY CAUSE MODERATE IRRITATION. STAIN FOR EVIDENCE OF CORNEAL INJURY. IF CORNEA IS BURNED, INSTILL ANTIBIOTIC STEROID PREPARATION FREQUENTLY. CONSULT OPHTHALMOLOGIST.
SKIN: MAY CAUSE MILD IRRITATION. CHRONIC EXPOSURE MAY CAUSE DEFATTING TYPE OF DERMATITIS. TREAT AS ANY CONTACT DERMATITIS.
RESPIRATORY: MAY CAUSE DRUNKENNESS. ANESTHETIC OR NARCOTIC EFFECT MAY OCCUR. ADMINISTER OXYGEN IF AVAILABLE. BRONCHODILATORS, EXPECTORANTS, AND ANTITUSSIVES MAY BE OF HELP. MECHANICAL SUPPORT OF RESPIRATION MAY BE NEEDED.
ORAL: MAY CAUSE CHEMICAL PNEUMONIA IF ASPIRATED INTO LUNGS. IF LAVAGE IS PERFORMED, SUGGEST ENDOTRACHEAL AND/OR ESOPHAGOSCOPIC CONTROL. LOW IN TOXICITY.
SYSTEMIC: MAY INCREASE MYOCARDIAL IRRITABILITY. AVOID EPINEPHRINE OR SIMILAR ACTING DRUGS IF AT ALL POSSIBLE. LIVER AND KIDNEY INJURY POSSIBLE WITH OVEREXPOSURE. MAY CAUSE NAUSEA OR VOMITING. ALCOHOL CONSUMED BEFORE AND AFTER EXPOSURE MAY INCREASE INJURY. NO SPECIFIC ANTIDOTE. CONSULT STANDARD LITERATURE. SUPPORTIVE CARE. ANIMAL STUDIES SUGGEST IT MAY BE A CARCINOGEN.

(CONTINUED ON PAGE 3)
(R) INDICATES A REGISTERED OR TRADEMARK NAME OF THE DOW CHEMICAL COMPANY

DOW CHEMICAL U.S.A. MIDLAND MICHIGAN 48640 EMERGENCY PHONE: 517-636-4400

EFFECTIVE DATE: 26 SEP 79 PRODUCT CODE: 56530
PRODUCT (CONT'D): NEU-TRI (R) SOLVENT MSD: 0168

SECTION 7 SPECIAL HANDLING INFORMATION

VENTILATION: RECOMMEND CONTROL OF VAPORS TO SUGGESTED GUIDE.
RESPIRATORY PROTECTION: NIOSH APPROVED RESPIRATORY PROTECTION REQUIRED IN ABSENCE OF PROPER ENVIRONMENTAL CONTROL. FOR EMERGENCIES, A SELF-CONTAINED BREATHING APPARATUS OR A FULL-FACE RESPIRATOR AS APPROVED BY NIOSH IS RECOMMENDED.
PROTECTIVE CLOTHING: NONE REQUIRED.
EYE PROTECTION: SAFETY GLASSES WITHOUT SIDE SHIELDS.

SECTION 8 SPECIAL PRECAUTIONS AND ADDITIONAL INFORMATION

PRECAUTIONS TO BE TAKEN IN HANDLING AND STORAGE: HANDLE WITH REASONABLE CARE. AVOID BREATHING VAPORS. STORE IN COOL PLACE. VAPORS OF THIS PRODUCT ARE HEAVIER THAN AIR AND WILL COLLECT IN LOW AREAS SUCH AS PITS, DEGREASERS, STORAGE TANKS, AND OTHER CONFINED AREAS. DO NOT ENTER THESE AREAS WHERE VAPORS OF THIS PRODUCT ARE SUSPECTED UNLESS SPECIAL BREATHING APPARATUS IS USED AND AN OBSERVER IS PRESENT FOR ASSISTANCE.
ADDITIONAL INFORMATION: ----

LAST PAGE

(R) INDICATES A REGISTERED OR TRADEMARK NAME OF THE DOW CHEMICAL COMPANY

THE INFORMATION HEREIN IS GIVEN IN GOOD FAITH, BUT NO WARRANTY, EXPRESSED OR IMPLIED, IS MADE.

MATERIAL SAFETY DATA SHEET

DOW CHEMICAL U.S.A. MIDLAND MICHIGAN 48640 EMERGENCY PHONE: 517-636-4400

EFFECTIVE DATE: 08 FEB 80 PRODUCT CODE: 85869

PRODUCT NAME: TETRAETHYLENE GLYCOL MSD: 0512

INGREDIENTS (TYPICAL VALUES-NOT SPECIFICATIONS)	%
TETRAETHYLENE GLYCOL	99

SECTION 1 PHYSICAL DATA

BOILING POINT: 597F
VAP PRESS: 0.01 MMHG @ 20C
VAP DENSITY (AIR=1): 1
SOL. IN WATER: COMPLETELY MISCIBLE
SP. GRAVITY: DENSITY 1.12 @ 25C
% VOLATILE BY VOL: NOT APPL.
APPEARANCE AND ODOR: COLORLESS LIQUID, MILD ODOR.

SECTION 2 FIRE AND EXPLOSION HAZARD DATA

FLASH POINT: 400F
METHOD USED: PMCC
FLAMMABLE LIMITS (STP IN AIR)
LFL: NOT DETER. UFL: NOT DETER.
EXTINGUISHING MEDIA: WATER FOG, ALCOHOL FOAM.
SPECIAL FIRE FIGHTING EQUIPMENT AND HAZARDS: ----

SECTION 3 REACTIVITY DATA

STABILITY: ----
INCOMPATIBILITY: OXIDIZING MATERIAL.
HAZARDOUS DECOMPOSITION PRODUCTS: ----
HAZARDOUS POLYMERIZATION: WILL NOT OCCUR.

SECTION 4 SPILL, LEAK, AND DISPOSAL PROCEDURES

ACTION TO TAKE FOR SPILLS (USE APPROPRIATE SAFETY EQUIPMENT): DAM TO PREVENT WATER POLLUTION. RECOVER WITH VACUUM TRUCK AND REFER TO PLANT FOR REPROCESSING.
DISPOSAL METHOD: BURN IN ACCORDANCE WITH LOCAL LAWS.

SECTION 5 HEALTH HAZARD DATA

INGESTION: VERY LOW SINGLE DOSE ORAL TOXICITY; LD50 RATS 32.8 G/KG.
EYE CONTACT: ESSENTIALLY NO IRRITATION AND NO CORNEAL INJURY.
SKIN CONTACT: ESSENTIALLY NO IRRITATION.
SKIN ABSORPTION: NOT CONSIDERED TO BE A PROBLEM BECAUSE OF ITS LOW

(CONTINUED ON PAGE 2)
(R) INDICATES A REGISTERED OR TRADEMARK NAME OF THE DOW CHEMICAL COMPANY

PRODUCT CODE: 85869
MSD: 0512

EFFECTIVE DATE: 08 FEB 80
PRODUCT (CONT'D): TETRAETHYLENE GLYCOL

SECTION 5 HEALTH HAZARD DATA (CONTINUED)

SKIN ABSORPTION: (CONTINUED)
TOXICITY BY THIS ROUTE.
INHALATION: NO GUIDE FOR CONTROL KNOWN. MATERIAL HAS VERY LOW VOLATILITY. HEATED VAPORS MAY BE VERY IRRITATING TO RESPIRATORY TRACT.
EFFECTS OF OVEREXPOSURE: ----

SECTION 6 FIRST AID--NOTE TO PHYSICIAN

FIRST AID PROCEDURES:

EYES: IRRIGATION OF THE EYE IMMEDIATELY WITH WATER FOR FIVE MINUTES IS GOOD SAFETY PRACTICE.
SKIN: CONTACT WILL PROBABLY CAUSE NO MORE THAN IRRITATION. WASH OFF IN FLOWING WATER OR SHOWER.
INHALATION: REMOVE TO FRESH AIR IF EFFECTS OCCUR. CONSULT MEDICAL PERSONNEL.
INGESTION: LOW IN TOXICITY. INDUCE VOMITING IF LARGE AMOUNTS ARE INGESTED.
NOTE TO PHYSICIAN:
EYES: INJURY IS UNLIKELY. STAIN FOR EVIDENCE OF CORNEAL INJURY.
SKIN: NO EFFECT EXPECTED.
RESPIRATORY: HEATED VAPORS MAY CAUSE MILD IRRITATION. BRONCHODILATORS, EXPECTORANTS AND ANTITUSSIVES MAY BE OF HELP.
ORAL: LOW IN TOXICITY
SYSTEMIC: HUMAN EFFECTS NOT ESTABLISHED. BASED ON MINIMAL DATA. NO SPECIFIC ANTIDOTE. TREATMENT BASED ON SOUND JUDGMENT OF PHYSICIAN AND INDIVIDUAL REACTION OF THE PATIENT.

SECTION 7 SPECIAL HANDLING INFORMATION

VENTILATION: GOOD ROOM VENTILATION USUALLY ADEQUATE FOR MOST OPERATIONS.
RESPIRATORY PROTECTION: NONE NORMALLY NEEDED.
PROTECTIVE CLOTHING: CLEAN, BODY-COVERING CLOTHING.
EYE PROTECTION: SAFETY GLASSES WITHOUT SIDE SHIELDS.

SECTION 8 SPECIAL PRECAUTIONS AND ADDITIONAL INFORMATION

PRECAUTIONS TO BE TAKEN IN HANDLING AND STORAGE: PRACTICE REASONABLE

(CONTINUED ON PAGE 3)
(R) INDICATES A REGISTERED OR TRADEMARK NAME OF THE DOW CHEMICAL COMPANY

EFFECTIVE DATE: 08 FEB 80 PRODUCT CODE: 85869
PRODUCT (CONT'D): TETRAETHYLENE GLYCOL MSD: 0512

SECTION 8 SPECIAL PRECAUTIONS AND ADDITIONAL INFORMATION (CONTINUED)

PRECAUTIONS TO BE TAKEN IN HANDLING AND STORAGE: (CONTINUED)
CARE TO AVOID EXPOSURE.

ADDITIONAL INFORMATION: REVISION 2/8/80 -- NOTE TO PHYSICIAN.

LAST PAGE
(R) INDICATES A REGISTERED OR TRADEMARK NAME OF THE DOW CHEMICAL COMPANY

THE INFORMATION HEREIN IS GIVEN IN GOOD FAITH, BUT NO WARRANTY, EXPRESS OR IMPLIED, IS MADE.

M A T E R I A L S A F E T Y D A T A S H E E T PAGE: 1

DOW CHEMICAL U.S.A. MIDLAND MICHIGAN 48640 EMERGENCY PHONE: 517-636-4400

EFFECTIVE DATE: 18 DEC 79 PRODUCT CODE: 87429

PRODUCT NAME: 1.1.2-TRICHLOROETHANE (STABILIZED) MSD: 0198

INGREDIENTS (TYPICAL VALUES-NOT SPECIFICATIONS)	%
1.1.2-TRICHLOROETHANE	100

SECTION 1 PHYSICAL DATA

BOILING POINT: 236.6F (114C) : SOL. IN WATER: 0.45 GM/100GM @ 25C
VAP PRESS: 18.8 MMHG @ 20C : SP. GRAVITY: 1.432 25/25C
VAP DENSITY (AIR=1): 4.55 : % VOLATILE BY VOL: 100 (ESSENTIALLY)
APPEARANCE AND ODOR: COLORLESS LIQUID. CHLOROFORM-LIKE ODOR.

SECTION 2 FIRE AND EXPLOSION HAZARD DATA

FLASH POINT: NONE : FLAMMABLE LIMITS (STP IN AIR)
METHOD USED: TCC : LFL: 6.4 VOL % UFL: 13.3 VOL %
EXTINGUISHING MEDIA: WATER FOG. FOAM. CO2. DRY CHEMICAL.
SPECIAL FIRE FIGHTING EQUIPMENT AND HAZARDS: SELF-CONTAINED RESPIRATORY EQUIPMENT AND FULL PROTECTIVE CLOTHING. STRONG UNPLEASANT ODOR. NOT CONSIDERED A FLAMMABLE LIQUID UNDER NORMAL INDUSTRIAL USE CONDITIONS BUT FORMS FLAMMABLE VAPOR-AIR MIXTURE AT 109F AND HIGHER.

SECTION 3 REACTIVITY DATA

STABILITY: AVOID OPEN FLAMES. WELDING ARCS. OR OTHER HIGH TEMPERATURE SOURCES WHICH INDUCE THERMAL DECOMPOSITION.
INCOMPATIBILITY: OXIDIZING MATERIAL. ALUMINUM.
HAZARDOUS DECOMPOSITION PRODUCTS: HYDROGEN CHLORIDE AND VERY SMALL AMOUNTS OF PHOSGENE AND CHLORINE.
HAZARDOUS POLYMERIZATION: WILL NOT OCCUR.

SECTION 4 SPILL. LEAK. AND DISPOSAL PROCEDURES

ACTION TO TAKE FOR SPILLS (USE APPROPRIATE SAFETY EQUIPMENT): SMALL SPILL MOP UP. WIPE UP OR SOAK UP IMMEDIATELY. REMOVE TO OUT OF DOORS. LARGE SPILLS: EVACUATE AREA. CONTAIN LIQUID; TRANSFER TO CLOSED METAL CONTAINERS. KEEP OUT OF WATER SUPPLY.
DISPOSAL METHOD: SEND SOLVENT TO A RECLAIMER. IN SOME CASES. SMALL AMOUNTS MAY BE TRANSPORTED TO AN AREA WHERE IT CAN BE PLACED ON THE GROUND AND ALLOWED TO EVAPORATE SAFETY IF LOCAL. STATE AND FEDERAL REGULATIONS PERMIT.

(CONTINUED ON PAGE 2)
(R) INDICATES A REGISTERED OR TRADEMARK NAME OF THE DOW CHEMICAL COMPANY

DOW CHEMICAL U.S.A. MIDLAND MICHIGAN 48640 EMERGENCY PHONE: 517-636-4400

EFFECTIVE DATE: 16 DEC 79 PRODUCT CODE: 87429
PRODUCT (CONT'D): 1,1,2-TRICHLOROETHANE (STABILIZED) MSD: 0198

SECTION 5 HEALTH HAZARD DATA

INGESTION: MODERATE TO HIGH ACUTE ORAL TOXICITY. LD50 (RATS) IN THE RANGE OF 100 MG/KG.
EYE CONTACT: UP TO MODERATE IRRITATION; POSSIBLE MINOR TRANSIENT CORNEAL INJURY.
SKIN CONTACT: SINGLE SHORT EXPOSURE - NO SIGNIFICANT IRRITATION. PROLONGED OR REPEATED EXPOSURE - MINOR IRRITATION. POSSIBLY A SUPERFICIAL BURN.
SKIN ABSORPTION: LOW TOXICITY. LD50 (RABBITS) >1000 MG/KG.
INHALATION: OSHA GUIDE IS 10 PPM (1975).
EFFECTS OF OVEREXPOSURE: CENTRAL NERVOUS SYSTEM DEPRESSION; ORGANIC INJURY. CAN CAUSE DEATH IF TOO MUCH IS BREATHED.

SECTION 6 FIRST AID--NOTE TO PHYSICIAN

FIRST AID PROCEDURES:

EYES: IRRIGATE WITH FLOWING WATER IMMEDIATELY AND CONTINUOUSLY FOR 15 MINUTES. REFER TO MEDICAL PERSONNEL.
SKIN: IN CASE OF CONTACT, IMMEDIATELY FLUSH SKIN WITH PLENTY OF WATER FOR AT LEAST 15 MINUTES WHILE REMOVING CONTAMINATED CLOTHING. CALL A PHYSICIAN. WASH CLOTHING BEFORE REUSE.
INHALATION: REMOVE TO FRESH AIR IF EFFECTS OCCUR. CALL PHYSICIAN AND/OR TRANSPORT TO MEDICAL FACILITY. IF RESPIRATION STOPS, GIVE MOUTH-TO-MOUTH RESUSCITATION.
INGESTION: TOXIC BY INGESTION. INDUCE VOMITING IMMEDIATELY AND CONSULT MEDICAL.

NOTE TO PHYSICIAN:
EYES: MAY CAUSE MODERATE IRRITATION. STAIN FOR EVIDENCE OF CORNEAL INJURY. IF CORNEA IS BURNED, INSTILL ANTIBIOTIC STEROID PREPARATION FREQUENTLY. CONSULT OPHTHALMOLOGIST.
SKIN: MAY CAUSE MILD IRRITATION. CHRONIC EXPOSURE MAY CAUSE DEFATTING TYPE OF DERMATITIS. TREAT AS ANY CONTACT DERMATITIS.
RESPIRATORY: HIGHLY TOXIC. ANESTHETIC OR NARCOTIC EFFECT MAY OCCUR. ADMINISTER OXYGEN IF AVAILABLE. MECHANICAL SUPPORT OF RESPIRATION MAY BE NEEDED. BRONCHODILATORS, EXPECTORANTS, AND ANTITUSSIVES MAY BE OF HELP.
ORAL: HIGHLY TOXIC. MAY CAUSE KIDNEY DAMAGE. MAY CAUSE LIVER DAMAGE. MAY CAUSE REACTION SMILAR TO PETROLEUM OR PETROLEUM LIKE SOLVENT. MAY CAUSE CHEMICAL PNEUMONIA IF ASPIRATED INTO LUNGS. IF LAVAGE IS PERFORMED, SUGGEST ENDOTRACHEAL AND/OR ESOPHAGOSCOPIC CONTROL.
SYSTEMIC: CAUTION: DO NOT CONFUSE THIS MATERIAL WITH THE MUCH LESS TOXIC 1,1,1-TRICHLOROETHANE. MAY CAUSE KIDNEY AND/OR LIVER DAMAGE. MAY INCREASE MYOCARDIAL IRRITABILITY. AVOID EPINEPHRIN OR SIMILAR ACTING DRUGS IF AT ALL POSSIBLE. ALCOHOL CONSUMED BEFORE OR AFTER EXPOSURE MAY INCREASE INJURY. CONSULT STANDARD LITERATURE. NO SPECIFIC ANTIDOTE.

(CONTINUED ON PAGE 3)
(R) INDICATES A REGISTERED OR TRADEMARK NAME OF THE DOW CHEMICAL COMPANY

DOW CHEMICAL U.S.A. MIDLAND MICHIGAN 48640 EMERGENCY PHONE: 517-636-4400

PRODUCT CODE: 87429

EFFECTIVE DATE: 18 DEC 79 MSD: 0198

PRODUCT (CONT'D): 1,1,2-TRICHLOROETHANE (STABILIZED)

SECTION 7 SPECIAL HANDLING INFORMATION

VENTILATION: RECOMMEND CONTROL OF VAPORS TO SUGGESTED GUIDE.
RESPIRATORY PROTECTION: NIOSH APPROVED RESPIRATORY PROTECTION REQUIRED IN ABSENCE OF PROPER ENVIRONMENTAL CONTROL. FOR EMERGENCIES, A SELF-CONTAINED BREATHING APPARATUS OR A FULL-FACE RESPIRATOR AS APPROVED BY NIOSH IS RECOMMENDED.
PROTECTIVE CLOTHING: NO SPECIAL PROTECTIVE CLOTHING NEEDED.
EYE PROTECTION: SAFETY GLASSES WITHOUT SIDE SHIELDS. EYE WASH STATIONS AND SAFETY SHOWERS SHOULD BE READILY AVAILABLE.

SECTION 8 SPECIAL PRECAUTIONS AND ADDITIONAL INFORMATION

PRECAUTIONS TO BE TAKEN IN HANDLING AND STORAGE: AVOID EYE AND SKIN CONTACTS AND BREATHING OF VAPORS. STORE IN A COOL, DRY PLACE.
ADDITIONAL INFORMATION: REVISIONS 12/18/79 --- EFFECTS OF OVEREXPOSURE, DISPOSAL METHOD.

LAST PAGE

(R) INDICATES A REGISTERED OR TRADEMARK NAME OF THE DOW CHEMICAL COMPANY

THE INFORMATION HEREIN IS GIVEN IN GOOD FAITH, BUT NO WARRANTY, EXPRESSED OR IMPLIED, IS MADE.

M A T E R I A L S A F E T Y D A T A S H E E T

DOW CHEMICAL U.S.A. MIDLAND MICHIGAN 48640 EMERGENCY PHONE: 517-636-4400

EFFECTIVE DATE: 27 JUN 80 PRODUCT CODE: 87719

PRODUCT NAME: TRIETHANOLAMINE 85 MSD: 0269

INGREDIENTS (TYPICAL VALUES-NOT SPECIFICATIONS)	%
TRIETHANOLAMINE	85
DIETHANOLAMINE	15

SECTION 1 PHYSICAL DATA

BOILING POINT: 335-650F, 168-343C : SOL. IN WATER: COMPLETELY MISCIBLE
VAP PRESS: 0.1 MMHG @ 20C : SP. GRAVITY: 1.1 25/25C
VAP DENSITY (AIR=1): ---- : % VOLATILE BY VOL: 100
APPEARANCE AND ODOR: COLORLESS LIQUID - SLIGHTLY AMMONIACAL ODOR.

SECTION 2 FIRE AND EXPLOSION HAZARD DATA

FLASH POINT: 365F, 185C : FLAMMABLE LIMITS (STP IN AIR)
METHOD USED: TAG OPEN CUP. : LFL: NOT DETER. UFL: NOT DETER.
EXTINGUISHING MEDIA: WATER FOG, ALCOHOL FOAM, CO2, DRY CHEMICAL.
SPECIAL FIRE FIGHTING EQUIPMENT AND HAZARDS: ----

SECTION 3 REACTIVITY DATA

STABILITY: ----
INCOMPATIBILITY: OXIDIZERS.
HAZARDOUS DECOMPOSITION PRODUCTS: NOX AT DECOMPOSITION TEMPERATURE.
HAZARDOUS POLYMERIZATION: WILL NOT OCCUR.

SECTION 4 SPILL, LEAK, AND DISPOSAL PROCEDURES

ACTION TO TAKE FOR SPILLS (USE APPROPRIATE SAFETY EQUIPMENT): USE ABSORBENT MATERIAL OR SAND. SCOOP UP AND PUT IN A CLEAN DRUM.
DISPOSAL METHOD: BURN IN INCINERATOR OR BURY AWAY FROM WATER SUPPLIES.

SECTION 5 HEALTH HAZARD DATA

INGESTION: LOW SINGLE DOSE ORAL TOXICITY; LD50 (RAT) APPROX. 5000 MG/KG (TEA).
EYE CONTACT: SEVERE PAIN, MODERATE TO SEVERE IRRITATION. NO CORNEAL INJURY LIKELY.
SKIN CONTACT: SINGLE SHORT EXPOSURE - MILD TO MODERATE IRRITATION. PROLONGED

(CONTINUED ON PAGE 2)
(R) INDICATES A REGISTERED OR TRADEMARK NAME OF THE DOW CHEMICAL COMPANY

EFFECTIVE DATE: 27 JUN 80 PRODUCT CODE: 87719
PRODUCT (CONT'D): TRIETHANOLAMINE 85 MSD: 0269

SECTION 5 HEALTH HAZARD DATA (CONTINUED)

SKIN CONTACT: (CONTINUED)
OR REPEATED EXPOSURE - MODERATE IRRITATION, EVEN A MILD BURN.
SKIN ABSORPTION: NOT LIKELY TO BE ABSORBED IN TOXIC AMOUNTS.
INHALATION: NO GUIDE FOR MIXTURE KNOW. DOW INDUSTRIAL HYGIENE GUIDE AND ACGIH TLV DIETHANOLAMINE IS 3 PPM. LOW VOLATILITY. IF HEATED: BAD ODOR AND MAY BE IRRITATING.
EFFECTS OF OVEREXPOSURE: IRRITATION, BAD ODOR.

SECTION 6 FIRST AID--NOTE TO PHYSICIAN

FIRST AID PROCEDURES:

EYES: IRRIGATE WITH FLOWING WATER IMMEDIATELY AND CONTINUOUSLY FOR 15 MINUTES. REFER TO MEDICAL PERSONNEL.
SKIN: IN CASE OF CONTACT, IMMEDIATELY FLUSH SKIN WITH PLENTY OF WATER FOR AT LEAST 15 MINUTES WHILE REMOVING CONTAMINATED CLOTHING AND SHOES. CALL A PHYSICIAN. WASH CLOTHING BEFORE REUSE. DESTROY CONTAMINATED SHOES.
INHALATION: REMOVE TO FRESH AIR IF EFFECTS OCCUR. CALL PHYSICIAN AND/OR TRANSPORT TO MEDICAL FACILITY.
INGESTION: IF SWALLOWED, INDUCE VOMITING IMMEDIATELY BY GIVING TWO GLASSES OF WATER AND STICKING FINGER DOWN THROAT. CALL A PHYSICIAN.
NOTE TO PHYSICIAN:
EYES: MAY CAUSE CORNEAL INJURY OR BURN. STAIN FOR EVIDENCE OF CORNEAL INJURY. IF CORNEA IS BURNED, INSTILL ANTIBIOTIC STEROID PREPARATION FREQUENTLY. CONSULT OPHTHALMOLOGIST.
SKIN: MAY CAUSE MODERATE IRRITATION. MAY CAUSE BURN. TREAT AS ANY CONTACT DERMATITIS. IF BURN IS PRESENT, TREAT AS ANY THERMAL BURN. NOT LIKELY TO BE ABSORBED IN ACUTELY TOXIC AMOUNTS.
RESPIRATORY: MAY CAUSE MODERATE IRRITATION. ADMINISTER OXYGEN IF AVAILABLE. BRONCHODILATORS, EXPECTORANTS, AND ANTITUSSIVES MAY BE OF HELP.
ORAL: LOW TO MODERATELY TOXIC.
GENERAL: HUMAN EFFECTS NOT ESTABLISHED. CONSULT STANDARD LITERATURE. NO SPECIFIC ANTIDOTE. TREATMENT BASED ON THE SOUND JUDGMENT OF THE PHYSICIAN AND THE INDIVIDUAL REACTIONS OF THE PATIENT.

SECTION 7 SPECIAL HANDLING INFORMATION

VENTILATION: RECOMMEND CONTROL OF VAPORS OF DIETHANOLAMINE TO SUGGESTED

(CONTINUED ON PAGE 3)
(R) INDICATES A REGISTERED OR TRADEMARK NAME OF THE DOW CHEMICAL COMPANY

EFFECTIVE DATE: 27 JUN 80 PRODUCT CODE: 87719
PRODUCT (CONT'D): TRIETHANOLAMINE 85 MSD: 0269

SECTION 7 SPECIAL HANDLING INFORMATION (CONTINUED)

VENTILATION: (CONTINUED)
GUIDE.
RESPIRATORY PROTECTION: NIOSH APPROVED RESPIRATORY PROTECTION REQUIRED IN ABSENCE OF PROPER ENVIRONMENTAL CONTROL. FOR EMERGENCIES, A SELF-CONTAINED BREATHING APPARATUS OR A FULL-FACE RESPIRATOR AS APPROVED BY NIOSH IS RECOMMENDED.
PROTECTIVE CLOTHING: CLEAN, BODY-COVERING CLOTHING.
EYE PROTECTION: CHEMICAL WORKERS GOGGLES. EYE FOUNTAIN AND WASHING FACILITIES NEAR WORK AREA.

SECTION 8 SPECIAL PRECAUTIONS AND ADDITIONAL INFORMATION

PRECAUTIONS TO BE TAKEN IN HANDLING AND STORAGE: AVOID SKIN AND EYE CONTACT. AVOID BREATHING VAPORS IF GENERATED.

ADDITIONAL INFORMATION: 27 JUN 80 REVISIONS 24 APR 79 -- SECTION 5.

LAST PAGE
(R) INDICATES A REGISTERED OR TRADEMARK NAME OF THE DOW CHEMICAL COMPANY

THE INFORMATION HEREIN IS GIVEN IN GOOD FAITH, BUT NO WARRANTY, EXPRESS OR IMPLIED, IS MADE.

M A T E R I A L S A F E T Y D A T A S H E E T

DOW CHEMICAL U.S.A. MIDLAND MICHIGAN 48640 EMERGENCY PHONE: 517-636-4400

EFFECTIVE DATE: 07 MAY 75 PRODUCT CODE: 67730

PRODUCT NAME: TRIETHANOLAMINE, 99 MSD: 0270

INGREDIENTS (TYPICAL VALUES-NOT SPECIFICATIONS)	%
TRIETHANOLAMINE, MIN.	99.0

SECTION 1 PHYSICAL DATA

BOILING POINT: 650F, 343C
VAP PRESS: (MMHG @ 20C) LOW
VAP DENSITY (AIR=1): 5.14
SOL. IN WATER: COMPLETELY MISCIBLE
SP. GRAVITY: 1.124 @ 25/25C
% VOLATILE BY VOL: 100
APPEARANCE AND ODOR: COLORLESS LIQUID - SLIGHTLY AMMONIACAL ODOR.

SECTION 2 FIRE AND EXPLOSION HAZARD DATA

FLASH POINT: 385F, 196C
METHOD USED: TCC
FLAMMABLE LIMITS (STP IN AIR)
LFL: NOT DETER. UFL: NOT DETER.
EXTINGUISHING MEDIA: WATER FOG, ALCOHOL FOAM, CO2, DRY CHEMICAL.
SPECIAL FIRE FIGHTING EQUIPMENT AND HAZARDS: SELF-CONTAINED BREATHING APPARATUS OR FULL-FACE RESPIRATOR AS APPROVED BY NIOSH IS RECOMMENDED.

SECTION 3 REACTIVITY DATA

STABILITY: ----
INCOMPATIBILITY: OXIDIZING AGENTS.
HAZARDOUS DECOMPOSITION PRODUCTS: TOXIC FUMES OF NOX WHEN HEATED TO DECOMPOSITION.
HAZARDOUS POLYMERIZATION: WILL NOT OCCUR.

SECTION 4 SPILL, LEAK, AND DISPOSAL PROCEDURES

ACTION TO TAKE FOR SPILLS (USE APPROPRIATE SAFETY EQUIPMENT): USE ABSORBEN MATERIAL OR SAND. SCOOP UP AND PUT IN A CLEAN DRUM.
DISPOSAL METHOD: BURN IN INCINERATOR OR BURY AWAY FROM WATER SUPPLIES.

SECTION 5 HEALTH HAZARD DATA

INGESTION: LOW SINGLE DOSE ORAL TOXICITY; LD50 (RAT) 8000 MG/KG.
EYE CONTACT: SEVERE PAIN, MODERATE IRRITATION; NO CORNEAL INJURY LIKELY.
SKIN CONTACT: MILD IRRITATION, BURN POSSIBLE ON INJURED SKIN.
SKIN ABSORPTION: NOT LIKELY TO BE ABSORBED IN TOXIC AMOUNTS.

(CONTINUED ON PAGE 2)

(R) INDICATES A REGISTERED OR TRADEMARK NAME OF THE DOW CHEMICAL COMPANY

SECTION 5 HEALTH HAZARD DATA (CONTINUED)

INHALATION: NO GUIDE FOR CONTROL KNOWN. LOW VOLATILITY. BAD ODOR AND MAY BE IRRITATING.
EFFECTS OF OVEREXPOSURE: IRRITATION. BAD ODOR.

SECTION 6 FIRST AID--NOTE TO PHYSICIAN

FIRST AID PROCEDURES:

EYES: IRRIGATION OF THE EYE IMMEDIATELY WITH WATER FOR FIVE MINUTES IS GOOD SAFETY PRACTICE.
SKIN: IN CASE OF CONTACT, IMMEDIATELY FLUSH SKIN WITH PLENTY OF WATER FOR AT LEAST 15 MINUTES WHILE REMOVING CONTAMINATED CLOTHING. CALL A PHYSICIAN. WASH CLOTHING BEFORE REUSE. DESTROY CONTAMINATED SHOES.
INHALATION: REMOVE TO FRESH AIR IF EFFECTS OCCUR. CALL PHYSICIAN AND/OR TRANSPORT TO MEDICAL FACILITY.
INGESTION: LOW IN TOXICITY. INDUCE VOMITING IF LARGE AMOUNTS ARE INGESTED.
NOTE TO PHYSICIAN:
EYES: STAIN FOR EVIDENCE OF CORNEAL INJURY. IF CORNEA IS BURNED, INSTILL ANTIBIOTIC STEROID PREPARATION FREQUENTLY. CONSULT OPHTHALMOLOGIST.
SKIN: MAY CAUSE MILD IRRITATION. TREAT AS ANY CONTACT DERMATITIS. WITH PROLONGED EXPOSURE ABRADED SKIN MAY BURN. IF BURN IS PRESENT, TREAT AS ANY THERMAL BURN.
RESPIRATORY: FOUL ODOR. HEATED FUMES MAY CAUSE MODERATE IRRITATION.
ORAL: LOW IN TOXICITY.
SYSTEMIC: RAT STUDIES SUGGEST LIVER AND KIDNEY ARE TARGET ORGANS WITH OVEREXPOSURE. HUMAN EFFECTS NOT ESTABLISHED. CONSULT STANDARD LITERATURE. NO SPECIFIC ANTIDOTE. TREATMENT BASED ON THE SOUND JUDGMENT OF THE PHYSICIAN AND THE INDIVIDUAL REACTIONS OF THE PATIENT

SECTION 7 SPECIAL HANDLING INFORMATION

VENTILATION: RECOMMEND CONTROL OF VAPORS TO COMFORT LEVEL.
RESPIRATORY PROTECTION: NIOSH APPROVED RESPIRATORY PROTECTION REQUIRED IN ABSENCE OF PROPER ENVIRONMENTAL CONTROL. FOR EMERGENCIES, A SELF-CONTAINED BREATHING APPARATUS OR A FULL-FACE RESPIRATOR AS APPROVED BY NIOSH IS RECOMMENDED.
PROTECTIVE CLOTHING: CLEAN, BODY-COVERING CLOTHING.
EYE PROTECTION: SAFETY GLASSES WITHOUT SIDE SHIELDS.

SECTION 8 SPECIAL PRECAUTIONS AND ADDITIONAL INFORMATION

PRECAUTIONS TO BE TAKEN IN HANDLING AND STORAGE: AVOID SKIN AND EYE CONTACT. AVOID BREATHING VAPORS IF GENERATED.

(CONTINUED ON PAGE 3)
(R) INDICATES A REGISTERED OR TRADEMARK NAME OF THE DOW CHEMICAL COMPANY

SECTION 8 SPECIAL PRECAUTIONS AND ADDITIONAL INFORMATION (CONTINUED)

ADDITIONAL INFORMATION: ----

LAST PAGE

(R) INDICATES A REGISTERED OR TRADEMARK NAME OF THE DOW CHEMICAL COMPANY

THE INFORMATION HEREIN IS GIVEN IN GOOD FAITH, BUT NO WARRANTY, EXPRESSED OR IMPLIED, IS MADE.

M A T E R I A L S A F E T Y D A T A S H E E T PAGE: 1

DOW CHEMICAL U.S.A. MIDLAND MICHIGAN 48640 EMERGENCY PHONE: 517-636-4400

EFFECTIVE DATE: 21 FEB 80 PRODUCT CODE: 87869

PRODUCT NAME: TRIISOPROPANOLAMINE 99 MSD: 0281

INGREDIENTS (TYPICAL VALUES-NOT SPECIFICATIONS)	%
TRIISOPROPANOLAMINE	99

SECTION 1 PHYSICAL DATA

BOILING POINT: 572F, 300C : SOL. IN WATER: COMPLETELY MISCIBLE
VAP PRESS: < 0.01 MMHG @ 20C : SP. GRAVITY: 1.01 @ 40C
VAP DENSITY (AIR=1): ---- : % VOLATILE BY VOL: ----
APPEARANCE AND ODOR: WHITE SOLID - SLIGHTLY AMMONIACAL.

SECTION 2 FIRE AND EXPLOSION HAZARD DATA

FLASH POINT: 320F,160C : FLAMMABLE LIMITS (STP IN AIR)
METHOD USED: CLEVELAND OPEN CUP. : LFL: NONE UFL: NONE
EXTINGUISHING MEDIA: WATER FOG, FOAM, ALCOHOL FOAM, CO2, DRY CHEMICAL.
SPECIAL FIRE FIGHTING EQUIPMENT AND HAZARDS: NONE. WATER OR FOAM MAY CAUSE FROTHING.

SECTION 3 REACTIVITY DATA

STABILITY: ----
INCOMPATIBILITY: OXIDIZING MATERIAL.
HAZARDOUS DECOMPOSITION PRODUCTS: EMITS TOXIC FUMES AT DECOMPOSITION TEMPERATURE.
HAZARDOUS POLYMERIZATION: WILL NOT OCCUR.

SECTION 4 SPILL, LEAK, AND DISPOSAL PROCEDURES

ACTION TO TAKE FOR SPILLS (USE APPROPRIATE SAFETY EQUIPMENT): SCRAPE UP.
DISPOSAL METHOD: BURN IN APPROVED INCINERATOR OR BURY AWAY FROM WATER SUPPLIES.

SECTION 5 HEALTH HAZARD DATA

INGESTION: LOW SINGLE DOSE ORAL TOXICITY: LD50 (GUINEA PIG) IN THE RANGE OF 1600 TO 3600 MG/KG.
EYE CONTACT: UP TO SLIGHT IRRITATION, AND SLIGHT TRANSIENT CORNEAL INJURY.

(CONTINUED ON PAGE 2)
(R) INDICATES A REGISTERED OR TRADEMARK NAME OF THE DOW CHEMICAL COMPANY

SECTION 5 HEALTH HAZARD DATA (CONTINUED)

SKIN CONTACT: PROLONGED CONTACT: MILD TO MODERATE IRRITATION;
REPEATED CONTACT: A SUPERFICIAL BURN.
SKIN ABSORPTION: NOT LIKELY TO BE ABSORBED THROUGH SKIN IN TOXIC AMOUNTS.
INHALATION: DOW INDUSTRIAL HYGIENE GUIDE 7 MG/M3.. NOT LIKELY A PROBLEM BECAUSE OF LOW VOLATILITY & GOOD WARNING.
EFFECTS OF OVEREXPOSURE: BAD ODOR.

SECTION 6 FIRST AID--NOTE TO PHYSICIAN

FIRST AID PROCEDURES:

EYES: IRRIGATE WITH FLOWING WATER IMMEDIATELY AND CONTINUOUSLY FOR 15 MINUTES. REFER TO MEDICAL PERSONNEL.
SKIN: IN CASE OF CONTACT, IMMEDIATELY FLUSH SKIN WITH PLENTY OF WATER FOR AT LEAST 15 MINUTES WHILE REMOVING CONTAMINATED CLOTHING AND SHOES. CALL A PHYSICIAN. WASH CLOTHING BEFORE REUSE. DESTROY CONTAMINATED SHOES.
INHALATION: REMOVE TO FRESH AIR IF EFFECTS OCCUR. CALL PHYSICIAN AND/OR TRANSPORT TO MEDICAL FACILITY.
INGESTION: IF SWALLOWED, INDUCE VOMITING IMMEDIATELY BY GIVING TWO GLASSES OF WATER AND STICKING FINGER DOWN THROAT. CALL A PHYSICIAN.

NOTE TO PHYSICIAN:
EYES: MAY CAUSE CORNEAL INJURY OR BURN. STAIN FOR EVIDENCE OF CORNEA INJURY. IF CORNEA IS BURNED, INSTILL ANTIBIOTIC STEROID PREPARATION FREQUENTLY. CONSULT OPHTHALMOLOGIST.
SKIN: MAY CAUSE MODERATE IRRITATION. MAY CAUSE BURN WITH REPEATED CONTACT. IF RASH IS PRESENT, TREAT AS ANY CONTACT DERMATITIS. IF BURN IS PRESENT, TREAT AS ANY THERMAL BURN.
RESPIRATORY: HEATED VAPORS MAY CAUSE MODERATE IRRITATION. BRONCHODILATORS, EXPECTORANTS, AND ANTITUSSIVES MAY BE OF HELP.
ORAL: LOW TO MODERATELY TOXIC.
GENERAL: NOT LIKELY TO BE ABSORBED IN ACUTELY TOXIC AMOUNTS. NO SPECIFIC ANTIDOTE. TREATMENT BASED ON THE SOUND JUDGMENT OF THE PHYSICIAN AND THE INDIVIDUAL REACTIONS OF THE PATIENT.

SECTION 7 SPECIAL HANDLING INFORMATION

VENTILATION: SUFFICIENT TO CONTROL VAPORS, IF GENERATED, TO SUGGESTED GUIDE.
RESPIRATORY PROTECTION: APPROVED FULL-FACE MASK OR AMINE VAPOR MASK ONLY IF REQUIRED.
PROTECTIVE CLOTHING: CLEAN, BODY-COVERING CLOTHING, RUBBER GLOVES, APRON, BOOTS AND FACE SHIELD AS DICTATED BY CIRCUMSTANCES.
EYE PROTECTION: SAFETY GLASSES WITHOUT SIDE SHIELDS. EYE FOUNTAIN AND SAFETY SHOWER NEAR WORK AREA.

(CONTINUED ON PAGE 3)
(R) INDICATES A REGISTERED OR TRADEMARK NAME OF THE DOW CHEMICAL COMPANY

SECTION 8 SPECIAL PRECAUTIONS AND ADDITIONAL INFORMATION

PRECAUTIONS TO BE TAKEN IN HANDLING AND STORAGE: AVOID SKIN AND EYE CONTACT. AVOID BREATHING VAPORS IF GENERATED.
ADDITIONAL INFORMATION: REVISIONS 12/27/79 -- SECTIONS 3,5,6,7.
REVISIONS 2/21/80 -- SECTIONS 5, AND 7.

LAST PAGE

(R) INDICATES A REGISTERED OR TRADEMARK NAME OF THE DOW CHEMICAL COMPANY

THE INFORMATION HEREIN IS GIVEN IN GOOD FAITH, BUT NO WARRANTY, EXPRESSED OR IMPLIED, IS MADE.

M A T E R I A L S A F E T Y D A T A S H E E T

DOW CHEMICAL U.S.A. MIDLAND MICHIGAN 48640 EMERGENCY PHONE: 517-636-4400

EFFECTIVE DATE: 24 OCT 78 PRODUCT CODE: 88116

PRODUCT NAME: TRIPROPYLENE GLYCOL MSD: 0283

INGREDIENTS (TYPICAL VALUES-NOT SPECIFICATIONS)	%
TRIPROPYLENE GLYCOL	99

SECTION 1 PHYSICAL DATA

BOILING POINT: 514F : SOL. IN WATER: COMPLETELY MISCIBLE
VAP PRESS: <0.01 MMHG@20C VERY LOW: SP. GRAVITY: 1.0150-1.0250 25/25C
VAP DENSITY (AIR=1): > 1 : % VOLATILE BY VOL: NOT APPLICABLE
APPEARANCE AND ODOR: COLORLESS LIQUID.

SECTION 2 FIRE AND EXPLOSION HAZARD DATA

FLASH POINT: 285F : FLAMMABLE LIMITS (STP IN AIR)
METHOD USED: PENSKY-MARTENS C.C. : LFL: NOT DETER. UFL: NOT DETER.
EXTINGUISHING MEDIA: WATER FOG, ALCOHOL FOAM, CO2, DRY CHEMICAL.
SPECIAL FIRE FIGHTING EQUIPMENT AND HAZARDS: NONE

SECTION 3 REACTIVITY DATA

STABILITY: ----
INCOMPATIBILITY: OXIDIZING MATERIAL.
HAZARDOUS DECOMPOSITION PRODUCTS: ALDEHYDES AND ACIDS.
HAZARDOUS POLYMERIZATION: WILL NOT OCCUR.

SECTION 4 SPILL, LEAK, AND DISPOSAL PROCEDURES

ACTION TO TAKE FOR SPILLS (USE APPROPRIATE SAFETY EQUIPMENT): USE CONTAINME DIKE IF POSSIBLE. USE VACUUM TRUCK TO RECOVER AND STORE. FOR SMALL AMOUNTS, SOAK UP AND SCOOP INTO DRUMS. WASH DOWN REMAINING SMALL AMOUNT WITH WATER.
DISPOSAL METHOD: DISCHARGE VACUUM TRUCK INTO STORAGE TANK FOR REPROCESSING, OR BURN ACCORDING TO LOCAL, STATE AND FEDERAL REGULATIONS.

SECTION 5 HEALTH HAZARD DATA

INGESTION: LOW SINGLE DOSE ORAL TOXICITY. LD50 RATS IN THE RANGE OF 3000 TO 10,000 MG/KG.

(CONTINUED ON PAGE 2)
(R) INDICATES A REGISTERED OR TRADEMARK NAME OF THE DOW CHEMICAL COMPANY

DOW CHEMICAL U.S.A. MIDLAND MICHIGAN 48640 EMERGENCY PHONE: 517-636-4400

EFFECTIVE DATE: 24 OCT 78 PRODUCT CODE: 88116
PRODUCT (CONT'D): TRIPROPYLENE GLYCOL MSD: 0283

SECTION 5 HEALTH HAZARD DATA (CONTINUED)

EYE CONTACT: NON-IRRITATING.
SKIN CONTACT: NON-IRRITATING.
SKIN ABSORPTION: NOT ABSORBED IN TOXIC AMOUNTS.
INHALATION: NO GUIDE FOR CONTROL KNOWN. HAS VERY LOW VOLATILITY.
EFFECTS OF OVEREXPOSURE: ----

SECTION 6 FIRST AID--NOTE TO PHYSICIAN

FIRST AID PROCEDURES:

EYES: IRRIGATION OF THE EYE IMMEDIATELY WITH WATER FOR FIVE MINUTES IS GOOD SAFETY PRACTICE.
SKIN: WASH OFF IN FLOWING WATER.
INHALATION: REMOVE TO FRESH AIR IF EFFECTS OCCUR. CONSULT MEDICAL PERSONNEL.
INGESTION: LOW IN TOXICITY. INDUCE VOMITING IF LARGE AMOUNTS ARE INGESTED.

NOTE TO PHYSICIAN:
EYES: NO EFFECT EXPECTED.
SKIN: NO EFFECT EXPECTED.
RESPIRATORY: INJURY IS UNLIKELY.
ORAL: LOW IN TOXICITY.
GENERAL: CONSULT STANDARD LITERATURE. NO SPECIFIC ANTIDOTE. TREATMENT BASED ON THE SOUND JUDGMENT OF THE PHYSICIAN AND THE INDIVIDUAL REACTIONS OF THE PATIENT.

SECTION 7 SPECIAL HANDLING INFORMATION

VENTILATION: GOOD ROOM VENTILATION USUALLY ADEQUATE FOR MOST OPERATIONS.
RESPIRATORY PROTECTION: NONE NORMALLY REQUIRED.
PROTECTIVE CLOTHING: CLEAN CLOTHING.
EYE PROTECTION: NOT NORMALLY NECESSARY.

SECTION 8 SPECIAL PRECAUTIONS AND ADDITIONAL INFORMATION

PRECAUTIONS TO BE TAKEN IN HANDLING AND STORAGE: EXERCISE REASONABLE CARE TO AVOID EXCESSIVE SKIN CONTACT AND EYE EXPOSURE.
ADDITIONAL INFORMATION: ----

LAST PAGE

(R) INDICATES A REGISTERED OR TRADEMARK NAME OF THE DOW CHEMICAL COMPANY

THE INFORMATION HEREIN IS GIVEN IN GOOD FAITH, BUT NO WARRANTY, EXPRESSED OR IMPLIED, IS MADE.

ADAPTED FROM: USDL
FORM NO LSD-005-4-MAY 1969

SHELL OIL COMPANY
SHELL CHEMICAL COMPANY
SHELL DEVELOPMENT COMPANY
SHELL PIPE LINE CORPORATION

MSDS 7,780-1

HAZARD RATING

3
2 0

MATERIAL SAFETY DATA SHEET

Information on this form is furnished solely for the purpose of compliance with the Occupational Safety and Health Act of 1970 and shall not be used for any other purpose. Use or dissemination of all or any part of this information for any other purpose may result in a violation of law or constitute grounds for legal action.

SECTION I

MANUFACTURER'S NAME: Shell Chemical Company	EMERGENCY TELEPHONE NO: 713-473-9461
ADDRESS (Number, Street, City, State and ZIP Code): One Shell Plaza, P. O. Box 2463, Houston, TX 77001	
CHEMICAL NAME AND SYNONYMS: None	TRADE NAME: Shell SOL® B
CHEMICAL FAMILY: Hydrocarbon	FORMULA:

SECTION II HAZARDOUS INGREDIENTS*

COMPOSITION	%	SPECIES	LD_{50} ORAL	LD_{50} DERMAL	LC_{50} CONCENTRATION	LC_{50} HOURS
	100					
		Rat	25 ml/kg		73,000 ppm (approx.)	4 hr
		Rabbit		5.0 ml/kg		

SECTION III PHYSICAL DATA

BOILING POINT (°F)	137-178	SPECIFIC GRAVITY (H_2O=1)	0.674
VAPOR PRESSURE (mmHg) @ 68°F (20°C)	180	PERCENT VOLATILE BY VOLUME (%)	
VAPOR DENSITY (AIR=1)	2.9	EVAPORATION RATE (nBuAc=1)	9.1
SOLUBILITY IN WATER	Negligible		
APPEARANCE AND ODOR	Colorless liquid with hydrocarbon odor.		

SECTION IV FIRE AND EXPLOSION HAZARD DATA

FLASH POINT* (Method used): Tag closed cup 0°F	FLAMMABLE LIMITS	LEL: 1.0	UEL: 7.0
EXTINGUISHING MEDIA: Exclude air - use foam, CO_2 steam, water-fog, dry chemicals.			
SPECIAL FIRE FIGHTING PROCEDURES: Do not use water, exclude air, consult local fire marshall.			
UNUSUAL FIRE AND EXPLOSION HAZARDS: Vapor forms explosive mixture with air between upper and lower explosion limits.			

*Modified by Shell Oil Company

SECTION V HEALTH HAZARD DATA

DS 7,780-1

ESHOLD LIMIT VALUE 400 PPM

ECTS OF OVEREXPOSURE

nesthesia - headache, nausea, dizziness, etc. Liquid slightly irritating to skin and eyes.

EMERGENCY AND FIRST AID PROCEDURES

Remove victim and restore breathing if required. Remove liquid from skin with soap and water. Flush eyes with water.

SECTION VI REACTIVITY DATA

STABILITY			CONDITIONS TO AVOID
	UNSTABLE		
	STABLE	X	

INCOMPATIBILITY (Materials to avoid)

Not applicable.

HAZARDOUS DECOMPOSITION PRODUCTS CO, CO_2 when combusted.

HAZARDOUS POLYMERIZATION			CONDITIONS TO AVOID
	MAY OCCUR		
	WILL NOT OCCUR	X	

SECTION VII SPILL OR LEAK PROCEDURES

STEPS TO BE TAKEN IN CASE MATERIAL IS RELEASED OR SPILLED

oid open flame or spark sources. Provide adequate ventilation.

WASTE DISPOSAL METHOD Evaporate or flush with water to open, well-ventilated area. Use oil sewer if available. Remove to container.

SECTION VIII SPECIAL PROTECTION INFORMATION

RESPIRATORY PROTECTION (Specify type) Organic canister mask or air pack.

VENTILATION		
	LOCAL EXHAUST	SPECIAL
	MECHANICAL (General) With approved Class D explosion proof motors and switches.	OTHER

PROTECTIVE GLOVES Normally not required.

EYE PROTECTION Conventional eye cover to guard against unexpected splashing.

SECTION IX SPECIAL PRECAUTIONS

PRECAUTIONS TO BE TAKEN IN HANDLING AND STORING

Avoid open flames and spark sources. Avoid splash filling. Provide adequate ventilation. Avoid excessive heat.

ll Oil Company

ct Safety & Compliance

Chemical Products

DATE August, 1973

THE INFORMATION CONTAINED HEREIN IS BASED ON DATA CONSIDERED ACCURATE. HOWEVER, NO WARRANTY IS EXPRESSED OR IMPLIED REGARDING THE ACCURACY OF THESE DATA OR THE RESULTS TO BE OBTAINED FROM THE USE THEREOF. VENDOR ASSUMES NO RESPONSIBILITY FOR INJURY TO VENDEE OR THIRD PERSONS PROXIMATELY CAUSED BY THE MATERIAL IF REASONABLE SAFETY PROCEDURES ARE NOT ADHERED TO AS STIPULATED IN THE DATA SHEET. ADDITIONALLY, NEITHER ASSUMES NO RESPONSIBILITY FOR INJURY TO VENDEE OR THIRD PERSONS PROXIMATELY CAUSED BY ABNORMAL USE OF THE MATERIAL EVEN IF REASONABLE SAFETY PROCEDURES ARE FOLLOWED. FURTHERMORE, VENDEE ASSUMES THE RISK IN HIS USE OF THE MATERIAL.

363

SHELL OIL COMPANY
SHELL CHEMICAL COMPANY
SHELL DEVELOPMENT COMPANY
SHELL PIPE LINE CORPORATION

MATERIAL SAFETY DATA SHEET

Information on this form is furnished solely for the purpose of compliance with the Occupational Safety and Health Act of 1970 and shall not be used for any other purpose. Use or dissemination of all or any part of this information for any other purpose may result in a violation of law or constitute grounds for legal action.

SECTION I

MANUFACTURER'S NAME: Shell Chemical Company	EMERGENCY TELEPHONE NO.: 713-473-9461
ADDRESS (Number, Street, City, State, and ZIP Code): One Shell Plaza, P. O. Box 2463, Houston, Texas 77001	
CHEMICAL NAME AND SYNONYMS	TRADE NAME: Shell Bol 71 Code 83195
CHEMICAL FAMILY: Hydrocarbon	FORMULA

SECTION II HAZARDOUS INGREDIENTS*

COMPOSITION	%	SPECIES	LD_{50} ORAL	LD_{50} DERMAL	LC_{50} CONCENTRATION	LC_{50} HOURS
PIGMENTS						
CATALYST						
VEHICLE						
SOLVENTS	100	Rat	>10 ml/kg		> 500 ppm	4
ADDITIVES						
OTHERS						
		Rabbit		>5.0 ml/kg		

SECTION III PHYSICAL DATA

BOILING POINT (°F)	346-403	SPECIFIC GRAVITY (H_2O=1) @ 60°F	0.759
VAPOR PRESSURE (mmHg) @ 100°F	4	PERCENT VOLATILE BY VOLUME (%)	
VAPOR DENSITY (AIR=1)	5.3	EVAPORATION RATE (n-BuAc = 1)	0.05
SOLUBILITY IN WATER	Negligible		
APPEARANCE AND ODOR	Light colored liquid with trace of hydrocarbon odor		

SECTION IV FIRE AND EXPLOSION HAZARD DATA

FLASH POINT (Method used): Tag closed cup = 123°F	FLAMMABLE LIMITS	Lel: 1.0	Uel: 6.0

EXTINGUISHING MEDIA
Exclude air - use foam, CO_2, steam, water-fog, dry chemicals.

SPECIAL FIRE FIGHTING PROCEDURES
Do not use water, exclude air, consult local fire marshal.

UNUSUAL FIRE AND EXPLOSION HAZARDS
Vapor forms explosive mixture with air between upper and lower explosion limits.

*Modified by Shell Oil Company

SECTION V HEALTH HAZARD DATA

THRESHOLD LIMIT VALUE: 400 ppm

EFFECTS OF OVEREXPOSURE: Anesthesia - headache, nausea, dizziness, etc. - Liquid slightly to moderately irritating to skin and eyes.

EMERGENCY AND FIRST AID PROCEDURES: Remove victim and restore breathing if required. Remove from skin with soap and water. Flush eyes with water.

SECTION VI REACTIVITY DATA

			CONDITIONS TO AVOID
STABILITY	UNSTABLE		
	STABLE	X	

INCOMPATABILITY (Materials to avoid): Not applicable

HAZARDOUS DECOMPOSITION PRODUCTS: CO, CO_2 when combusted

			CONDITIONS TO AVOID
HAZARDOUS POLYMERIZATION	MAY OCCUR		
	WILL NOT OCCUR	X	

SECTION VII SPILL OR LEAK PROCEDURES

STEPS TO BE TAKEN IN CASE MATERIAL IS RELEASED OR SPILLED: Avoid open flame or spark sources. Provide adequate ventilation.

WASTE DISPOSAL METHOD: Evaporate or flush with water to an open, well-ventilated area. Use oil separator if available. Remove to container.

SECTION VIII SPECIAL PROTECTION INFORMATION

RESPIRATORY PROTECTION (Specify type): Organic canister mask or air pack.

SPECIAL:

VENTILATION — LOCAL EXHAUST: Desirable

OTHER:

MECHANICAL (General): With approved Class D explosion-proof motors and switches.

PROTECTIVE GLOVES: Normally not required

EYE PROTECTION: conventional eye cover to guard against unexpected splashing.

OTHER PROTECTIVE EQUIPMENT:

SECTION IX SPECIAL PRECAUTIONS

PRECAUTIONS TO BE TAKEN IN HANDLING AND STORING: Avoid open flames and spark sources. Avoid splash-filling. Provide adequate ventilation. Avoid excessive heat.

OTHER PRECAUTIONS:

NAME: D. M. Sheets

TITLE: Supervisor-Product Development-Resins

COMPANY: Shell Chemical

SIGNATURE: D M Sheets

DATE: August 1973

THE INFORMATION CONTAINED HEREIN IS BASED ON DATA CONSIDERED ACCURATE. HOWEVER, NO WARRANTY IS EXPRESSED OR IMPLIED REGARDING THE ACCURACY OF THESE DATA OR THE RESULTS TO BE OBTAINED FROM THE USE THEREOF. VENDOR ASSUMES NO RESPONSIBILITY FOR INJURY TO VENDEE OR THIRD PERSONS PROXIMATELY CAUSED BY THE MATERIAL IF REASONABLE SAFETY PROCEDURES ARE NOT ADHERED TO AS STIPULATED IN THE DATA SHEET. ADDITIONALLY, VENDOR ASSUMES NO RESPONSIBILITY FOR INJURY TO VENDEE OR THIRD PERSONS PROXIMATELY CAUSED BY ABNORMAL USE OF THE MATERIAL EVEN IF REASONABLE SAFETY PROCEDURES ARE FOLLOWED. FURTHERMORE, VENDEE ASSUMES THE RISK IN HIS USE OF THE MATERIAL.

M A T E R I A L S A F E T Y D A T A S H E E T

DOW CHEMICAL U.S.A. MIDLAND MICHIGAN 48640 EMERGENCY PHONE: 517-636-4400

EFFECTIVE DATE: 19 OCT 78 PRODUCT CODE: 91606

PRODUCT NAME: VINYL TOLUENE (12T AND 50T INHIBITOR GRADES) MSC: 0201

INGREDIENTS (TYPICAL VALUES-NOT SPECIFICATIONS)	%
VINYLTOLUENE, MINIMUM	99.2

SECTION 1 PHYSICAL DATA

BOILING POINT: 333.9F
VAP PRESS: 1.10 MMHG @ 20C
VAP DENSITY (AIR=1): 4.08
SOL. IN WATER: 0.0089%
SP. GRAVITY: 0.9164 @ 60/60F
% VOLATILE BY VOL: 100
APPEARANCE AND ODOR: CLEAR LIQUID, HYDROCARBON ODOR.

SECTION 2 FIRE AND EXPLOSION HAZARD DATA

FLASH POINT: 127F
METHOD USED: TAG CLOSED CUP
FLAMMABLE LIMITS (STP IN AIR)
LFL: 0.8 VOL.% UFL: 11 VOL.%
EXTINGUISHING MEDIA: AFFF (AQUEOUS FILM FORMING FOAM), ALCOHOL FOAM, CO2, DRY CHEMICAL, PROTEIN FOAM, WATER FOG.
SPECIAL FIRE FIGHTING EQUIPMENT AND HAZARDS: AT ELEVATED TEMPERATURES SUCH AS IN FIRE CONDITIONS, POLYMERIZATION MAY TAKE PLACE. IF IT TAKES PLACE IN A CLOSED CONTAINER, THERE IS A POSSIBILITY OF A VIOLENT RUPTURE. AUTO IGNITION 1067F.

SECTION 3 REACTIVITY DATA

STABILITY: POLYMERIZES SLOWLY AT ROOM TEMPERATURE; AVOID HEAT.
INCOMPATIBILITY: ACID, BASE, OXIDIZING MATERIAL.
HAZARDOUS DECOMPOSITION PRODUCTS: ----
HAZARDOUS POLYMERIZATION: MAY OCCUR. AVOID HEAT, METAL SALTS, SUCH AS FERRIC AND ALUMINUM CHLORIDES.

SECTION 4 SPILL, LEAK, AND DISPOSAL PROCEDURES

ACTION TO TAKE FOR SPILLS (USE APPROPRIATE SAFETY EQUIPMENT): SMALL SPILL OR LEAK: REMOVE FOR DISPOSAL BY COVERING WITH SUITABLE ABSORBING AGENT, SUCH AS SAND. (DO NOT USE ZORBAL). IF SPILL OCCURS IN A CONFINED AREA, SUCH AS A DIKE, PUMP WATER INTO AREA; VINYLTOLUENE THEN CAN BE PUMPED OFF THE WATER FOR RECOVERY.
DISPOSAL METHOD: INCINERATE IN PROPERLY DESIGNED FURNACE. COMPLY WITH FEDERAL, STATE AND LOCAL REGULATIONS.

(CONTINUED ON PAGE 2)
(R) INDICATES A REGISTERED OR TRADEMARK NAME OF THE DOW CHEMICAL COMPANY

SECTION 5 HEALTH HAZARD DATA

INGESTION: LOW SINGLE DOSE ORAL: TOXICITY LD50 (RATS) 4000 MG/KG.
EYE CONTACT: PAIN & SLIGHT IRRITATION, BUT NO CORNEAL INJURY LIKELY.
SKIN CONTACT: SINGLE SHORT EXPOSURE -- NO IRRITATION LIKELY. PROLONGED OR REPEATED -- SLIGHT TO MODERATE IRRITATION EVEN A MINOR BURN POSSIBLE.
SKIN ABSORPTION: LOW TOXICITY.
INHALATION: OSHA GUIDE IS 100 PPM (1975).
EFFECTS OF OVEREXPOSURE: EYE AND NASAL IRRITATION. HIGH LEVELS - ANESTHESIA. LOWER LEVELS - DIZZINESS AND DRUNKENNESS.

SECTION 6 FIRST AID--NOTE TO PHYSICIAN

FIRST AID PROCEDURES:

EYES: IRRIGATION OF THE EYE IMMEDIATELY WITH WATER FOR FIVE MINUTES IS GOOD SAFETY PRACTICE. CONSULT MEDICAL.
SKIN: WASH OFF IN FLOWING WATER. DECONTAMINATE CLOTHING AND ACCESSORIES BEFORE REUSE. GOOD PERSONAL HYGIENE.
INHALATION: REMOVE TO FRESH AIR IF EFFECTS OCCUR. IF RESPIRATION STOPS, GIVE MOUTH-TO-MOUTH RESUSCITATION. CALL PHYSICIAN AND/OR TRANSPORT TO MEDICAL FACILITY.
INGESTION: DO NOT INDUCE VOMITING. CALL A PHYSICIAN OR TRANSPORT TO EMERGENCY FACILITY.

NOTE TO PHYSICIAN:
EYES: MAY CAUSE MILD IRRITATION. STAIN FOR EVIDENCE OF CORNEAL INJURY.
SKIN: PROLONGED OR REPEATED EXPOSURE: MAY CAUSE MODERATE IRRITATION. MAY CAUSE BURN. TREAT AS ANY CONTACT DERMATITIS. IF BURN IS PRESENT, TREAT AS ANY THERMAL BURN. NOT LIKELY TO BE ABSORBED IN ACUTELY TOXIC AMOUNTS.
RESPIRATORY: MAY CAUSE DRUNKENNESS. ANESTHETIC OR NARCOTIC EFFECT MAY OCCUR. ADMINISTER OXYGEN IF AVAILABLE. BRONCHODILATORS, EXPECTORANTS, AND ANTITUSSIVES MAY BE OF HELP. MECHANICAL SUPPORT OF RESPIRATION MAY BE NEEDED. GOOD WARNING PROPERTIES.
ORAL: LOW IN TOXICITY. MAY CAUSE REACTION SIMILAR TO PETROLEUM OR PETROLEUM-LIKE SOLVENT. MAY CAUSE CHEMICAL PNEUMONIA IF ASPIRATED INTO LUNGS. IF LAVAGE IS PERFORMED SUGGEST ENDOTRACHEAL AND/OR ESOPHAGOSCOPIC CONTROL.
GENERAL: CONSULT STANDARD LITERATURE. NO SPECIFIC ANTIDOTE. TREATMENT BASED ON THE SOUND JUDGMENT OF THE PHYSICIAN AND THE INDIVIDUAL REACTIONS OF THE PATIENT.

SECTION 7 SPECIAL HANDLING INFORMATION

VENTILATION: GOOD ROOM VENTILATION USUALLY ADEQUATE FOR MOST OPERATIONS.

(CONTINUED ON PAGE 3)
(R) INDICATES A REGISTERED OR TRADEMARK NAME OF THE DOW CHEMICAL COMPANY

EFFECTIVE DATE: 19 OCT 78 PRODUCT CODE: 91606
PRODUCT (CONT'D): VINYL TOLUENE (12T AND 50T INHIBITOR GRADES)MSD: 0201
RESPIRATORY PROTECTION: NONE NORMALLY NEEDED. NIOSH APPROVED RESPIRATORY PROTECTION REQUIRED IN ABSENCE OF PROPER ENVIRONMENTAL CONTROL. FOR EMERGENCIES, A SELF-CONTAINED BREATHING APPARATUS OR A FULL-FACE RESPIRATOR AS APPROVED BY NIOSH IS RECOMMENDED.
PROTECTIVE CLOTHING: CLEAN, BODY COVERING CLOTHING. PROVIDE WITH GLOVES MADE OF NEOPRENE OR NON-SOLUBLE PLASTIC.
EYE PROTECTION: SAFETY GLASSES WITHOUT SIDE SHIELDS.

SECTION 8 SPECIAL PRECAUTIONS AND ADDITIONAL INFORMATION

PRECAUTIONS TO BE TAKEN IN HANDLING AND STORAGE: AVOID BREATHING VAPORS IF GENERATED. AVOID SKIN AND EYE CONTACT. PRACTICE CARE AND CAUTION TO AVOID EXPLOSABILITY. MONITOR AND CONTROL INHIBITOR LEVEL IN PRODUCT AT GREATER THAN 15 PPM. IF T-BUTYLCATECHOL IS THE INHIBITOR, THE MONOMER SHOULD BE AERATED ONCE A WEEK FOR ABOUT 30 MIN. CONTROL TEMPERATURE IN STORAGE BELOW 90F. VAPOR IS 1.1 TIMES HEAVIER THAN AIR AT 100F AND HAS AN IGNITION TEMPERATURE OF 914F.
ADDITIONAL INFORMATION: ----

LAST PAGE

(R) INDICATES A REGISTERED OR TRADEMARK NAME OF THE DOW CHEMICAL COMPANY

THE INFORMATION HEREIN IS GIVEN IN GOOD FAITH, BUT NO WARRANTY, EXPRESSED OR IMPLIED, IS MADE.

MATERIAL SAFETY DATA SHEET

PAGE: 1

DOW CHEMICAL U.S.A. MIDLAND MICHIGAN 48640 EMERGENCY PHONE: 517-636-4400

EFFECTIVE DATE: 25 JUL 78 PRODUCT CODE: 30478

PRODUCT NAME: ETHYLENE GLYCOL (REGULAR) MSD: 0597

INGREDIENTS (TYPICAL VALUES-NOT SPECIFICATIONS)	%
ETHYLENE GLYCOL (ESSENTIALLY)	100

SECTION 1 PHYSICAL DATA

BOILING POINT: 387.1F
VAP PRESS: 0.12 MMHG @ 25C
VAP DENSITY (AIR=1): VERY LOW
SOL. IN WATER: COMPLETELY MISCIBLE
SP. GRAVITY: 1.1155 @ 20/20C
% VOLATILE BY VOL: ESSENTIALLY ZERO
APPEARANCE AND ODOR: COLORLESS LIQUID - PRACTICALLY ODORLESS

SECTION 2 FIRE AND EXPLOSION HAZARD DATA

FLASH POINT: 232F
METHOD USED: PENSKY MARTENS C.C.
FLAMMABLE LIMITS (STP IN AIR)
LFL: 3.2% UFL: NOT DETER.
EXTINGUISHING MEDIA: WATER FOG, ALCOHOL FOAM, CO2, AND DRY CHEMICAL.
SPECIAL FIRE FIGHTING EQUIPMENT AND HAZARDS: NONE

SECTION 3 REACTIVITY DATA

STABILITY: WILL IGNITE IN AIR AT 775F. (413C).
INCOMPATIBILITY: OXIDIZING MATERIAL.
HAZARDOUS DECOMPOSITION PRODUCTS: ----
HAZARDOUS POLYMERIZATION: WILL NOT OCCUR.

SECTION 4 SPILL, LEAK, AND DISPOSAL PROCEDURES

ACTION TO TAKE FOR SPILLS (USE APPROPRIATE SAFETY EQUIPMENT): FLUSH WITH WATER. SOAK UP WITH ABSORBENT MATERIAL. DIKE TO CONTAIN TO PREVENT WATER POLLUTION.
DISPOSAL METHOD: SALVAGE, OR BURN AFTER CONSULTING WITH LOCAL AUTHORITIES. RECOVER WITH VACUUM TRUCK AND RETURN TO PLANT FOR REPROCESSING.

SECTION 5 HEALTH HAZARD DATA

INGESTION: LOW SINGLE DOSE ORAL FOR ANIMALS; MODERATE FOR HUMANS.
EYE CONTACT: ESSENTIALLY NO IRRITATION.
SKIN CONTACT: ESSENTIALLY NO IRRITATION.

(CONTINUED ON PAGE 2)
(R) INDICATES A REGISTERED OR TRADEMARK NAME OF THE DOW CHEMICAL COMPANY

M A T E R I A L S A F E T Y D A T A S H E E T

DOW CHEMICAL U.S.A. MIDLAND MICHIGAN 48640 EMERGENCY PHONE: 517-636-4400

PRODUCT CODE: 30478
MSD: 0597

EFFECTIVE DATE: 25 JUL 78
PRODUCT (CONT'D): ETHYLENE GLYCOL (REGULAR)

SECTION 5 HEALTH HAZARD DATA (CONTINUED)

SKIN ABSORPTION: ABSORBED THROUGH SKIN, BUT LOW IN TOXICITY BY THIS ROUTE.
INHALATION: ACGIH TLV: 100 PPM AS A VAPOR; 10 MG/CU METER AS A PARTICULATE (1977).
EFFECTS OF OVEREXPOSURE: DRUNKENNESS, CENTRAL NERVOUS SYSTEM DEPRESSION, NARCOSIS.

SECTION 6 FIRST AID--NOTE TO PHYSICIAN

FIRST AID PROCEDURES:

EYES: IRRIGATION OF THE EYE IMMEDIATELY FOR FIVE MINUTES IS GOOD SAFETY PRACTICE. CONSULT MEDICAL.
SKIN: WASH OFF IN FLOWING WATER. DECONTAMINATE CLOTHING AND ACCESSORIES BEFORE REUSE. GOOD PERSONAL HYGIENE.
INHALATION: REMOVE TO FRESH AIR IF EFFECTS OCCUR. CONSULT MEDICAL.
INGESTION: TOXIC BY INGESTION. INDUCE VOMITING IMMEDIATELY. CALL A PHYSICIAN AND/OR TRANSPORT TO EMERGENCY FACILITY.
NOTE TO PHYSICIAN: STAIN FOR EVIDENCE OF CORNEAL ABRASION OR INJURY. MAY CAUSE NEUROLOGIC SIGNS AND SYMPTOMS. MAY CAUSE KIDNEY DAMAGE. MAY CAUSE ELECTROLYTE IMBALANCE. SUGGEST BASELINE CBC, UA, AND 12 TEST. SUGGEST BASELINE ELECTPOLYTES. CONSULT STANDARD LITERATURE. USE OF ALCOHOL MAY BE HELPFUL.

SECTION 7 SPECIAL HANDLING INFORMATION

VENTILATION: RECOMMEND CONTROL OF VAPORS TO SUGGESTED GUIDE.
RESPIRATORY PROTECTION: NONE LIKELY TO BE NEEDED UNLESS MATERIAL IS HANDLED HOT. FOR SPRAY MISTS - USE AN APPROVED DUST RESPIRATOR.
PROTECTIVE CLOTHING: CLEAN, BODY-COVERING CLOTHING.
EYE PROTECTION: NOT NORMALLY NECESSARY.

SECTION 8 SPECIAL PRECAUTIONS AND ADDITIONAL INFORMATION

PRECAUTIONS TO BE TAKEN IN HANDLING AND STORAGE: AVOID INGESTION. PRACTICE REASONABLE CAUTION AND PERSONAL CLEANLINESS. AVOID SKIN AND EYE CONTACT.
ADDITIONAL INFORMATION: ----

LAST PAGE

(R) INDICATES A REGISTERED OR TRADEMARK NAME OF THE DOW CHEMICAL COMPANY

THE INFORMATION HEREIN IS GIVEN IN GOOD FAITH, BUT NO WARRANTY, EXPRESSED OR IMPLIED, IS MADE.

EASTMAN KODAK COMPANY
APPROVED BY U.S. DEPARTMENT OF LABOR
"ESSENTIALLY SIMILAR" TO FORM OSHA-20

370 Kodak

MATERIAL SAFETY DATA SHEET

ECP 2079-1F (5-77)

SECTION I

PRODUCT NAME:	EKTASOLVE® EE Acetate Solvent	SIZE:	Not applicable.
CHEMICAL NAME:	Ethylene Glycol Monoethyl Ether Acetate		
FORMULA:	$C_2H_5OC_2H_4OCOCH_3$		
MANUFACTURER:	Marketed by Eastman Chemical Products, Inc.		
ADDRESS:	Kingsport, Tennessee 37662		
FOR INFORMATION ON HEALTH HAZARDS CALL:	615-247-0411, Extension 2613		
FOR OTHER INFORMATION CALL:	Same number as above Extension 4675	INFORMATION EFFECTIVE AS OF:	August, 1977

SECTION II HAZARDOUS INGREDIENTS OF MIXTURES

PRINCIPAL HAZARDOUS COMPONENT (S)	%	TLV (Units)
Not applicable.		

SECTION III PHYSICAL DATA

BOILING POINT (°F.)	313°F (156°C)	SPECIFIC GRAVITY (H_2O = 1)	0.973 @ 20°/20°C
VAPOR PRESSURE (mm Hg.)	1.2 @ 20°C	PERCENT VOLATILE BY VOLUME (%)	>99
VAPOR DENSITY (AIR = 1)	4.72	EVAPORATION RATE (n-butyl acetate = 1)	0.2
SOLUBILITY IN WATER	Appreciable.		
APPEARANCE AND ODOR	Colorless liquid; mild ester-like odor.		

SECTION IV FIRE AND EXPLOSION HAZARD DATA

FLASH POINT (Method used)	130°F (54°C) TCC	FLAMMABLE LIMITS	Lel 1.24% @200°F (93°C)	Uel 12.7% @275°F (135°C)
EXTINGUISHING MEDIA	Alcohol foam, CO_2, Water spray, Dry chemical			
SPECIAL FIRE FIGHTING PROCEDURES	Wear self-contained breathing apparatus and protective clothing to prevent contact with skin or eyes.			
UNUSUAL FIRE AND EXPLOSION HAZARDS	None known to Eastman.			

SECTION V HEALTH HAZARD DATA

371

THRESHOLD LIMIT VALUE	100 ppm
EFFECTS OF OVEREXPOSURE	Excessive skin contact or inhalation of high concentrations of vapor may cause toxic effects, including central nervous system depression and lung and kidney injury.
EMERGENCY AND FIRST AID PROCEDURES	Eye contact: irrigate immediately and thoroughly with water at least 15 minutes and get medical attention if any symptoms are present after washing. Skin contact: flush immediately and thoroughly with water. Inhalation: remove from exposure, treat symptomatically, and get medical attention.

SECTION VI REACTIVITY DATA

STABILITY	UNSTABLE		CONDITIONS TO AVOID
	STABLE	X	Not applicable.

INCOMPATIBILITY (Materials to avoid)	Oxidizing materials can cause a reaction.
HAZARDOUS DECOMPOSITION PRODUCTS	As with any other organic material, combustion will produce carbon dioxide and probably carbon monoxide.

HAZARDOUS POLYMERIZATION		CONDITIONS TO AVOID
May Occur	Will Not Occur	
	X	Not applicable.

SECTION VII SPILL OR LEAK PROCEDURES

STEPS TO BE TAKEN IN CASE MATERIAL IS RELEASED OR SPILLED	Eliminate all ignition sources. Flush spill away with water spray. Small spills may be collected with absorbent material.
WASTE DISPOSAL METHOD	Incineration. Observe Federal, State and local laws regarding health and pollution.

SECTION VIII SPECIAL PROTECTION INFORMATION

RESPIRATORY PROTECTION (Specify type)	A NIOSH-approved respirator for organic vapor should be worn if needed.

VENTILATION				
	LOCAL EXHAUST	X If needed to control vapor at elevated temperatures.	SPECIAL	None known to Eastman.
	MECHANICAL (general)	Recommended.	OTHER	None known to Eastman.

PROTECTIVE GLOVES	Should be worn.	EYE PROTECTION	Safety glasses should be worn in any type of industrial operation.
OTHER PROTECTIVE EQUIPMENT	None should be needed.		

SECTION IX SPECIAL PRECAUTIONS

PRECAUTIONS TO BE TAKEN IN HANDLING AND STORING	Combustible. Keep away from heat and open flame. Avoid prolonged or repeated skin contact. Avoid breathing vapor. Use with ventilation adequate to maintain vapor concentrations below the TLV of 100 ppm..
OTHER PRECAUTIONS	None known to Eastman.

The information contained herein is furnished without warranty of any kind. Employers should use this information only as a supplement to other information gathered by them and must make independent determinations of suitability and completeness of information from all sources to assure proper use of these materials and the safety and health of employees.

EASTMAN KODAK COMPANY
APPROVED BY U.S. DEPARTMENT OF LABOR
"ESSENTIALLY SIMILAR" TO FORM OSHA-20

372

MATERIAL SAFETY DATA SHEET

SECTION I

PRODUCT NAME:	Ethyl Acetate 99%
SIZE:	
CHEMICAL NAME:	Ethyl acetate
FORMULA:	$CH_3COOC_2H_5$
MANUFACTURER:	Tennessee Eastman Company
ADDRESS:	Kingsport, Tennessee 37662
FOR INFORMATION ON HEALTH HAZARDS CALL:	
FOR OTHER INFORMATION CALL:	615-247-0411
SIGNATURE AND DATE:	

SECTION II HAZARDOUS INGREDIENTS OF MIXTURES

PRINCIPAL HAZARDOUS COMPONENT (S)	%	TLV (Units)
Not Applicable		

SECTION III PHYSICAL DATA

BOILING POINT (°F.)	167°F (75.5°C)	SPECIFIC GRAVITY (H_2O=1)	0.900-0.903
VAPOR PRESSURE (mm Hg.)	86 @ 20°C	PERCENT VOLATILE BY VOLUME (%)	100%
VAPOR DENSITY (AIR=1)		EVAPORATION RATE (n-butyl acetate=1)	4.1
SOLUBILITY IN WATER	7.4%	Molecular Weight	88.10
APPEARANCE AND ODOR	Clear volatile liquid, characteristic, non-residual		

SECTION IV FIRE AND EXPLOSION HAZARD DATA

			Lel	Uel
FLASH POINT (Method used)	TOC 28°F (-2°C)	FLAMMABLE LIMITS	2.02	10.7

EXTINGUISHING MEDIA	Water spray, carbon dioxide, dry chemical
SPECIAL FIRE FIGHTING PROCEDURES	None
UNUSUAL FIRE AND EXPLOSION HAZARDS	None

SECTION V HEALTH HAZARD DATA

THRESHOLD LIMIT VALUE	400 parts per million
EFFECTS OF OVEREXPOSURE	Eye contact causes irritation. Repeated or prolonged skin contact results in drying and cracking of the skin. Vapor irritating to mucous membranes. High vapor concentrations may produce narcotic effects.
EMERGENCY AND FIRST AID PROCEDURES	Eye contact - irrigate for 15 minutes. Get medical attention. For narcotic effects - remove to fresh air.

SECTION VI REACTIVITY DATA

STABILITY	UNSTABLE		CONDITIONS TO AVOID
	STABLE	XX	

INCOMPATIBILITY (Materials to avoid)

HAZARDOUS DECOMPOSITION PRODUCTS

HAZARDOUS POLYMERIZATION		CONDITIONS TO AVOID
May Occur	Will Not Occur XX	

SECTION VII SPILL OR LEAK PROCEDURES

STEPS TO BE TAKEN IN CASE MATERIAL IS RELEASED OR SPILLED	Contain spill; if small, flush with large volume of water. Remove any source of sparks or flames. Provide adequate exhaust. Soak up on absorbent paper or rags for burning.
WASTE DISPOSAL METHOD	Incineration is best.

SECTION VIII SPECIAL PROTECTION INFORMATION

RESPIRATORY PROTECTION (Specify type) Should be used in confined areas or spraying operations.

VENTILATION	LOCAL EXHAUST XX	SPECIAL
	MECHANICAL (general) XX	OTHER

PROTECTIVE GLOVES Suggested

EYE PROTECTION Face shield/safety glasses

OTHER PROTECTIVE EQUIPMENT

SECTION IX SPECIAL PRECAUTIONS

PRECAUTIONS TO BE TAKEN IN HANDLING AND STORING	Avoid eye contact. Avoid repeated or prolonged skin contact. Use with ventilation adequate to maintain atmospheric concentrations at or below TLV of 400 parts per million. Keep container closed.
OTHER PRECAUTIONS	

M A T E R I A L S A F E T Y D A T A S H E E T PAGE: 1

DOW CHEMICAL U.S.A. MIDLAND MICHIGAN 48640 EMERGENCY PHONE: 517-636-4400

EFFECTIVE DATE: 02 JAN 79 PRODUCT CODE: 22581

PRODUCT NAME: DOWANOL (R) TPM MSD: 0053

INGREDIENTS (TYPICAL VALUES-NOT SPECIFICATIONS)	%
TRIPROPYLENE GLYCOL METHYL ETHER	

SECTION 1 PHYSICAL DATA

BOILING POINT: 468F
VAP PRESS: 0.02 MMHG @ 25C
VAP DENSITY (AIR=1): 7.15
SOL. IN WATER: COMPLETELY MISCIBLE.
SP. GRAVITY: .965 25/25C
% VOLATILE BY VOL: 100
APPEARANCE AND ODOR: COLORLESS, MILD LIQUID.

SECTION 2 FIRE AND EXPLOSION HAZARD DATA

FLASH POINT: 240F
METHOD USED: PMCC
FLAMMABLE LIMITS (STP IN AIR)
LFL: NOT DETER. UFL: NOT DETER.
EXTINGUISHING MEDIA: WATER FOG, ALCOHOL FOAM, CO2, DRY CHEMICAL.
SPECIAL FIRE FIGHTING EQUIPMENT AND HAZARDS: ----

SECTION 3 REACTIVITY DATA

STABILITY: ----
INCOMPATIBILITY: OXIDIZING MATERIAL.
HAZARDOUS DECOMPOSITION PRODUCTS: ----
HAZARDOUS POLYMERIZATION: WILL NOT OCCUR.

SECTION 4 SPILL, LEAK, AND DISPOSAL PROCEDURES

ACTION TO TAKE FOR SPILLS (USE APPROPRIATE SAFETY EQUIPMENT): ADD ABSORBEN
REMOVE WITH SHOVEL.
DISPOSAL METHOD: BURN IN ACCORDANCE WITH LOCAL LAWS.

SECTION 5 HEALTH HAZARD DATA

INGESTION: LOW SINGLE DOSE ORAL TOXICITY; LD50 RAT 3300 MG/KG.
EYE CONTACT: UP TO SLIGHT IRRITATION; CORNEAL INJURY NOT LIKELY.
SKIN CONTACT: SINGLE SHORT EXPOSURE - NO IRRITATION. REPEATED PROLONGED EXPOSURE - UP TO POSSIBLE MILD IRRITATION, DEPENDING UPON SEVERITY OF EXPOSURE.
SKIN ABSORPTION: MAY BE ABSORBED IN TOXIC AMOUNTS IF EXPOSURE IS REPEATED PROLONGED. LOW TOXICITY BY SINGLE DOSE, MODERATE BY REPEATED DOSES FOR RABBITS.

(CONTINUED ON PAGE 2)

(R) INDICATES A REGISTERED OR TRADEMARK NAME OF THE DOW CHEMICAL COMPANY

SECTION 5 HEALTH HAZARD DATA (CONTINUED)

INHALATION: NO GUIDE FOR CONTROL KNOWN.
EFFECTS OF OVEREXPOSURE: CENTRAL NERVOUS SYSTEM DEPRESSION AT HIGH LEVELS.

SECTION 6 FIRST AID--NOTE TO PHYSICIAN

FIRST AID PROCEDURES:

EYES: IRRIGATION OF THE EYE IMMEDIATELY WITH WATER FOR FIVE MINUTES IS GOOD SAFETY PRACTICE.
SKIN: CONTACT WILL PROBABLY CAUSE NO MORE THAN IRRITATION. WASH OFF IN FLOWING WATER OR SHOWER. WASH CLOTHING BEFORE REUSE.
INHALATION: REMOVE TO FRESH AIR IF EFFECTS OCCUR. CALL PHYSICIAN AND/OR TRANSPORT TO MEDICAL FACILITY. IF RESPIRATION STOPS GIVE MOUTH-TO-MOUTH RESUSCITATION.
INGESTION: LOW IN TOXICITY. INDUCE VOMITING IF LARGE AMOUNTS ARE INGESTED.

NOTE TO PHYSICIAN:
EYES: MAY CAUSE MILD IRRITATION. STAIN FOR EVIDENCE OF CORNEAL INJURY.
SKIN: MAY CAUSE MILD IRRITATION. TREAT AS ANY CONTACT DERMATITIS. SEE ABOVE.
RESPIRATORY: WITH GROSS OVEREXPOSURE ANESTHETIC OR NARCOTIC EFFECT MAY OCCUR. ADMINISTER OXYGEN IF AVAILABLE. BRONCHODILATORS, EXPECTORANTS, AND ANTITUSSIVES MAY BE OF HELP.
ORAL: LOW IN TOXICITY.
SYSTEMIC: RAT STUDIES SUGGEST THE KIDNEY MAY BE THE TARGET ORGAN WITH OVEREXPOSURE. HUMAN EFFECTS NOT ESTABLISHED. NO SPECIFIC ANTIDOTE. TREATMENT BASED ON THE SOUND JUDGMENT OF THE PHYSICIAN AND THE INDIVIDUAL REACTIONS OF THE PATIENT.

SECTION 7 SPECIAL HANDLING INFORMATION

VENTILATION: GOOD ROOM VENTILATION USUALLY ADEQUATE FOR MOST OPERATIONS.
RESPIRATORY PROTECTION: NONE NORMALLY NEEDED. NIOSH APPROVED RESPIRATORY PROTECTION REQUIRED IN ABSENCE OF PROPER ENVIRONMENTAL CONTROL. FOR EMERGENCIES, A SELF-CONTAINED BREATHING APPARATUS OR A FULL-FACE RESPIRATOR AS APPROVED BY NIOSH IS RECOMMENDED.
PROTECTIVE CLOTHING: CLEAN, BODY-COVERING CLOTHING.
EYE PROTECTION: SAFETY GLASSES WITHOUT SIDE SHIELDS.

SECTION 8 SPECIAL PRECAUTIONS AND ADDITIONAL INFORMATION

PRECAUTIONS TO BE TAKEN IN HANDLING AND STORAGE: PRACTICE REASONABLE CARE AND CLEANLINESS. AVOID BREATHING VAPOR IF GENERATED.

(CONTINUED ON PAGE 3)
(R) INDICATES A REGISTERED OR TRADEMARK NAME OF THE DOW CHEMICAL COMPAN

SECTION 8 SPECIAL PRECAUTIONS AND ADDITIONAL INFORMATION (CONTINUED

ADDITIONAL INFORMATION: ----

LAST PAGE

(R) INDICATES A REGISTERED OR TRADEMARK NAME OF THE DOW CHEMICAL COMPANY

THE INFORMATION HEREIN IS GIVEN IN GOOD FAITH, BUT NO WARRANTY, EXPRESSED OR IMPLIED, IS MADE.

MATERIAL SAFETY DATA SHEET

DOW CHEMICAL U.S.A. MIDLAND MICHIGAN 48640 EMERGENCY PHONE: 517-636-4400

EFFECTIVE DATE: 28 SEP 78

PRODUCT CODE: 22399

MSD: 0049

PRODUCT NAME: DOWANOL (R) EPH GLYCOL ETHER

INGREDIENTS (TYPICAL VALUES-NOT SPECIFICATIONS)	%
ETHYLENE GLYCOL PHENYL ETHER, APPROXIMATELY	92
DIETHYLENE GLYCOL PHENYL ETHER, APPROXIMATELY	8

SECTION 1 PHYSICAL DATA

BOILING POINT: 245.6C (473F)
VAP PRESS: 0.03 MMHG @ 25C
VAP DENSITY (AIR=1): 4.8
SOL. IN WATER: 2.3 G/100G
SP. GRAVITY: 1.1 @ 20/4C
% VOLATILE BY VOL: 100
APPEARANCE AND ODOR: COLORLESS - PLEASANT SMELLING LIQUID. (FREEZES @ 14C 57F).

SECTION 2 FIRE AND EXPLOSION HAZARD DATA

FLASH POINT: 78C (172F)
METHOD USED: PMCC
FLAMMABLE LIMITS (STP IN AIR)
LFL: NOT DETER. UFL: NOT DETER.
EXTINGUISHING MEDIA: WATER FOG, FOAM, ALCOHOL FOAM, CO2, DRY CHEMICAL.
SPECIAL FIRE FIGHTING EQUIPMENT AND HAZARDS: SELF-CONTAINED BREATHING APPARATUS.

SECTION 3 REACTIVITY DATA

STABILITY: ----
INCOMPATIBILITY: OXIDIZING MATERIAL.
HAZARDOUS DECOMPOSITION PRODUCTS: ----
HAZARDOUS POLYMERIZATION: WILL NOT OCCUR.

SECTION 4 SPILL, LEAK, AND DISPOSAL PROCEDURES

ACTION TO TAKE FOR SPILLS (USE APPROPRIATE SAFETY EQUIPMENT): USE ABSORBEN MATERIAL. REMOVE WITH SHOVEL.
DISPOSAL METHOD: BURN IN AN APPROVED INCINERATOR OR BURY AWAY FROM WATER SUPPLIES.

SECTION 5 HEALTH HAZARD DATA

INGESTION: LOW SINGLE DOSE ORAL; LD50 (RATS) GREATER THAN 2000 MG/KG (HIGHEST LEVEL TESTED).

(CONTINUED ON PAGE 2)

(R) INDICATES A REGISTERED OR TRADEMARK NAME OF THE DOW CHEMICAL COMPANY

SECTION 5 HEALTH HAZARD DATA (CONTINUED)

EYE CONTACT: MODERATE IRRITATION AND MODERATE CORNEAL INJURY WHICH MAY BE SLOW TO HEAL.
SKIN CONTACT: ESSENTIALLY NON-IRRITATING.
SKIN ABSORPTION: NOT LIKELY TO BE ABSORBED IN ACUTELY TOXIC AMOUNTS; LD50 (RABBITS) GREATER THAN 2000 MG/KG.
INHALATION: NO GUIDE FOR CONTROL KNOWN. SINGLE EXPOSURE TO VAPORS AT 100C - NO ADVERSE EFFECTS. SINGLE EXPOSURE VAPORS AT ROOM TEMPERATURE - NO ADVERSE EFFECTS.
EFFECTS OF OVEREXPOSURE: IRRITATION OF EYES & NOSE. MAY CAUSE SLIGHT ANESTHESIA & TISSUE INJURY.

SECTION 6 FIRST AID--NOTE TO PHYSICIAN

FIRST AID PROCEDURES:

EYES: IRRIGATE WITH FLOWING WATER IMMEDIATELY AND CONTINUOUSLY FOR 15 MINUTES. REFER TO MEDICAL PERSONNEL.
SKIN: CONTACT WILL PROBABLY CAUSE NO MORE THAN IRRITATION. WASH OFF IN FLOWING WATER OR SHOWER.
INHALATION: REMOVE TO FRESH AIR IF EFFECTS OCCUR. CONSLT MEDICAL PERSONNEL.
INGESTION: LOW IN TOXICITY. INDUCE VOMITING IF LARGE AMOUNTS ARE INGESTED.

NOTE TO PHYSICIAN:
EYES: MAY CAUSE MODERATE IRRITATION. STAIN FOR EVIDENCE OF CORNEAL INJURY. IF CORNEA IS BURNED, INSTILL ANTIBIOTIC STEROID PREPARATION FREQUENTLY. CONSULT OPHTHALMOLOGIST.
SKIN: NO EFFECT EXPECTED. NOT LIKELY TO BE ABSORBED IN ACUTELY TOXIC AMOUNTS.
RESPIRATORY: INJURY IS UNLIKELY.
ORAL: LOW IN TOXICITY.
SYSTEMIC: ANIMAL STUDIES SUGGEST LIVER AND KIDNEY ARE TARGET ORGANS FOR OVEREXPOSURES. HUMAN EFFECTS NOT ESTABLISHED. BASED ON MINIMAL DATA. NO SPECIFIC ANTIDOTE. TREATMENT BASED ON THE SOUND JUDGMENT OF THE PHYSICIAN AND THE INDIVIDUAL REACTIONS OF THE PATIENT.

SECTION 7 SPECIAL HANDLING INFORMATION

VENTILATION: SUFFICIENT TO MINIMIZE EXPOSURE TO VAPORS IF GENERATED.
RESPIRATORY PROTECTION: NONE LIKELY TO BE NEEDED.
PROTECTIVE CLOTHING: CLEAN, BODY - COVERING CLOTHING.
EYE PROTECTION: CHEMICAL WORKERS GOGGLES. EYE FOUNTAIN AT WORK AREA.

(CONTINUED ON PAGE 3)
(R) INDICATES A REGISTERED OR TRADEMARK NAME OF THE DOW CHEMICAL COMPANY

EFFECTIVE DATE: 26 SEP 78 PRODUCT CODE: 22399
PRODUCT (CONT'D): DOWANOL (R) EPH GLYCOL ETHER MSD: 0049

SECTION 8 SPECIAL PRECAUTIONS AND ADDITIONAL INFORMATION

PRECAUTIONS TO BE TAKEN IN HANDLING AND STORAGE: DO NOT GET IN EYES.
AVOID BREATHING VAPORS IF GENERATED.
ADDITIONAL INFORMATION: ----

LAST PAGE

(R) INDICATES A REGISTERED OR TRADEMARK NAME OF THE DOW CHEMICAL COMPANY

THE INFORMATION HEREIN IS GIVEN IN GOOD FAITH, BUT NO WARRANTY,
EXPRESSED OR IMPLIED, IS MADE.

M A T E R I A L S A F E T Y D A T A S H E E T

DOW CHEMICAL U.S.A. MIDLAND MICHIGAN 48640 EMERGENCY PHONE: 517-636-4400

EFFECTIVE DATE: 08 JAN 79 PRODUCT CODE: 22388

PRODUCT NAME: DOWANOL (R) EM MSD: 0048

INGREDIENTS (TYPICAL VALUES-NOT SPECIFICATIONS)	%
ETHYLENE GLYCOL METHYL ETHER	95

SECTION 1 PHYSICAL DATA

BOILING POINT: 255F
VAP PRESS: 9.5 MMHG @ 25C
VAP DENSITY (AIR=1): 2.6
SOL. IN WATER: COMPLETELY MISCIBLE.
SP. GRAVITY: 0.963 25/25C
% VOLATILE BY VOL: 100
APPEARANCE AND ODOR: CLEAR LIQUID.

SECTION 2 FIRE AND EXPLOSION HAZARD DATA

FLASH POINT: 105F
METHOD USED: TAG CLOSED CUP.
FLAMMABLE LIMITS (STP IN AIR)
LFL: 1.8% UFL: 14.0%
EXTINGUISHING MEDIA: WATER FOG, ALCOHOL FOAM, CO2, DRY CHEMICAL.
SPECIAL FIRE FIGHTING EQUIPMENT AND HAZARDS: ----

SECTION 3 REACTIVITY DATA

STABILITY: IGNITES IN AIR AT 545F.
INCOMPATIBILITY: OXIDIZING MATERIAL.
HAZARDOUS DECOMPOSITION PRODUCTS: ----
HAZARDOUS POLYMERIZATION: WILL NOT OCCUR.

SECTION 4 SPILL, LEAK, AND DISPOSAL PROCEDURES

ACTION TO TAKE FOR SPILLS (USE APPROPRIATE SAFETY EQUIPMENT): ADD ABSORBENT REMOVE WITH RUBBER SHOVEL.
DISPOSAL METHOD: BURN IN ACCORDANCE WITH LOCAL LAWS.

SECTION 5 HEALTH HAZARD DATA

INGESTION: LOW SINGLE DOSE ORAL TOXICITY; LD50 FOR LAB ANIMALS RANGES FROM 890 TO 3400 MG/KG (RATS APPROX. 2000 MG/KG).
EYE CONTACT: MODERATE PAIN, SLIGHT IRRITATION ACCOMPANIED BY SLIGHT TRANSIE CORNEAL INJURY.
SKIN CONTACT: MAY BE SLIGHTLY IRRITATING.
SKIN ABSORPTION: MODERATELY TOXIC BY ABSORPTION; LD50 2000 MG/KG; REPEATED CONTACT MAY RESULT IN SYSTEMIC INJURY.

(CONTINUED ON PAGE 2)
(R) INDICATES A REGISTERED OR TRADEMARK NAME OF THE DOW CHEMICAL COMPANY

SECTION 5 HEALTH HAZARD DATA (CONTINUED)

INHALATION: OSHA GUIDE AND ACGIH TLV IS 25 PPM (1978).
EFFECTS OF OVEREXPOSURE: DROWSINESS, FATIGUE, MACROCYTIC ANEMIA, ABNORMAL LEUKOCYTE DEVELOPMENT AND BONE MARROW DEPRESSION. CHRONIC HI VAPOR EXPOSURE MAY CAUSE NEUROLOGICAL INJURY.

SECTION 6 FIRST AID--NOTE TO PHYSICIAN

FIRST AID PROCEDURES:

EYES: IRRIGATE WITH FLOWING WATER IMMEDIATELY AND CONTINUOUSLY FOR 15 MINUTES. REFER TO MEDICAL PERSONNEL.
SKIN: IN CASE OF CONTACT, IMMEDIATELY FLUSH SKIN WITH PLENTY OF WATER FOR AT LEAST 15 MINUTES WHILE REMOVING CONTAMINATED CLOTHING. CALL PHYSICIAN. WASH CLOTHING BEFORE REUSE. DESTROY CONTAMINATED SHOES.
INHALATION: REMOVE TO FRESH AIR IF EFFECTS OCCUR. CALL PHYSICIAN AND/ TRANSPORT TO MEDICAL FACILITY. IF RESPIRATION STOPS GIVE MOUTH-TO-M RESUSCITATION.
INGESTION: IF SWALLOWED, INDUCE VOMITING IMMEDIATELY BY GIVING TWO GLASSES OF WATER AND STICKING FINGER DOWN THROAT. CALL A PHYSIC

NOTE TO PHYSICIAN:
EYES: MAY CAUSE CORNEAL INJURY OR BURN. STAIN FOR EVIDENCE OF CORN INJURY. IF CORNEA IS BURNED, INSTILL ANTIBIOTIC STEROID PR RATION FREQUENTLY. CONSULT OPHTHALMOLOGIST.
SKIN: MAY CAUSE MILD IRRITATION. TREAT AS ANY CONTACT DERMATITIS. MAY BE ABSORBED IN ACUTELY TOXIC AMOUNTS. OCTOBER ISSUE OF J.O.M. 1978 DESCRIBES TWO CASES OF HUMAN POISONING FROM CUTANEOUS ABSORPTION OF ETHYLENE GLYCOL METHYL ETHER. BOTH INDIVIDUALS HAD SEVERE C.N.S. SYMPTOMS AND BONE MARROW DEPRES
RESPIRATORY: TOXIC BY INHALATION. MAY CAUSE NEUROLOGIC SIGNS AND SYMPTOMS. ANIMAL STUDIES INDICATE THAT LIVER AND KIDNEY MAY BE TARGET ORGANS WITH OVEREXPOSURE. KIDNEY INJURY IS MORE PRONOUNCED THAN LIVER INJURY.
ORAL: ----
SYSTEMIC: CONSULT STANDARD LITERATURE. NO SPECIFIC ANTIDOTE. TREA MENT BASED ON THE SOUND JUDGMENT OF THE PHYSICIAN AND THE INDIVIDUAL REACTIONS OF THE PATIENT.

SECTION 7 SPECIAL HANDLING INFORMATION

VENTILATION: RECOMMEND CONTROL OF VAPORS OR MIST TO SUGGESTED GUIDE.
RESPIRATORY PROTECTION: NIOSH APPROVED RESPIRATORY PROTECTION REQUIRED IN ABSENCE OF PROPER ENVIRONMENTAL CONTROL. FOR EMERGENCIES, A SELF-CONTAINED BREATHING APPARATUS OR A FULL-FACE RESPIRATOR AS APPROVED BY NIOSH IS RECOMMENDED.
PROTECTIVE CLOTHING: CLEAN, BODY-COVERING CLOTHING.

(CONTINUED ON PAGE 3)
(R) INDICATES A REGISTERED OR TRADEMARK NAME OF THE DOW CHEMICAL COMPA

DOW CHEMICAL U.S.A. MIDLAND MICHIGAN 48640 EMERGENCY PHONE: 517-636-4400

EFFECTIVE DATE: 08 JAN 79 PRODUCT CODE: 22388
PRODUCT (CONT'D): DOWANOL (R) EM MSD: 0048
EYE PROTECTION: SAFETY GLASSES WITHOUT SIDE SHIELDS. WASHING FACILITIES NEAR WORK AREA.

SECTION 8 SPECIAL PRECAUTIONS AND ADDITIONAL INFORMATION

PRECAUTIONS TO BE TAKEN IN HANDLING AND STORAGE: AVOID VAPOR INHALATION. PRACTICE REASONABLE CARE TO AVOID EYE AND EXCESSIVE SKIN CONTACT.
ADDITIONAL INFORMATION: ----

LAST PAGE

(R) INDICATES A REGISTERED OR TRADEMARK NAME OF THE DOW CHEMICAL COMPANY

THE INFORMATION HEREIN IS GIVEN IN GOOD FAITH, BUT NO WARRANTY, EXPRESSED OR IMPLIED, IS MADE.

M A T E R I A L S A F E T Y D A T A S H E E T

DOW CHEMICAL U.S.A. MIDLAND MICHIGAN 48640 EMERGENCY PHONE: 517-636-4400

EFFECTIVE DATE: 02 JAN 79 PRODUCT CODE: 22377

PRODUCT NAME: DOWANOL (R) EE MSD: 0047

INGREDIENTS (TYPICAL VALUES-NOT SPECIFICATIONS)	%
ETHYLENE GLYCOL ETHYL ETHER, MINIMUM	95

SECTION 1 PHYSICAL DATA

BOILING POINT: 275.8F
VAP PRESS: 5.5 MMHG @ 25C
VAP DENSITY (AIR=1): 3.12
SOL. IN WATER: INFINITE
SP. GRAVITY: 0.928 @ 25/25C
% VOLATILE BY VOL: 100
APPEARANCE AND ODOR: WATER - WHITE LIQUID - ETHER ODOR.

SECTION 2 FIRE AND EXPLOSION HAZARD DATA

FLASH POINT: 109F
METHOD USED: TAG CLOSED CUP
FLAMMABLE LIMITS (STP IN AIR)
LFL: 1.8 UFL: 14.0
EXTINGUISHING MEDIA: WATER FOG, ALCOHOL FOAM, CO2, DRY CHEMICAL.
SPECIAL FIRE FIGHTING EQUIPMENT AND HAZARDS: ----

SECTION 3 REACTIVITY DATA

STABILITY: AVOID OPEN FLAMES.
INCOMPATIBILITY: OXIDIZING MATERIAL.
HAZARDOUS DECOMPOSITION PRODUCTS: ----
HAZARDOUS POLYMERIZATION: WILL NOT OCCUR.

SECTION 4 SPILL, LEAK, AND DISPOSAL PROCEDURES

ACTION TO TAKE FOR SPILLS (USE APPROPRIATE SAFETY EQUIPMENT): ADD ABSORBEN
REMOVE WITH RUBBER SHOVEL. AVOID SOURCES OF IGNITION. DO NOT
ALLOW PRODUCT TO CONTAMINATE GROUND WATER SYSTEMS.
DISPOSAL METHOD: BURN IN ACCORDANCE WITH LOCAL LAWS.

SECTION 5 HEALTH HAZARD DATA

INGESTION: LOW SINGLE DOSE TOXICITY. LD50 (LAB ANIMALS) RANGES FROM
1.4 TO 5.5 G/KG.
EYE CONTACT: PAIN, MILD IRRITATION AND TRANSIENT CORNEAL INJURY
(HEALS IN A DAY OR SO).
SKIN CONTACT: MILD IRRITATION ONLY UPON PROLONGED OR REPEATED EXPOSURE.

(CONTINUED ON PAGE 2)

(R) INDICATES A REGISTERED OR TRADEMARK NAME OF THE DOW CHEMICAL COMPANY

SECTION 5 HEALTH HAZARD DATA (CONTINUED)

SKIN ABSORPTION: LOW TOXICITY. LD50 (RABBITS) - 3.6 ML/KG: PROBABLY READILY ABSORBED.
INHALATION: ACGIH TLV IS 100 PPM (1978).
EFFECTS OF OVEREXPOSURE: IRRITATING & DISAGREEBLE VAPORS. IF EXPOSURE IS NOT ADEQUATELY CONTROLLED, MAY CAUSE ILLNESS DETECTABLE IN ITS EARLY STAGES ONLY BY ADEQUATE EXAMINATION.

SECTION 6 FIRST AID--NOTE TO PHYSICIAN

FIRST AID PROCEDURES:

EYES: IRRIGATE WITH FLOWING WATER IMMEDIATELY AND CONTINUOUSLY FOR 15 MINUTES. REFER TO MEDICAL PERSONNEL.
SKIN: CONTACT WILL PROBABLY CAUSE NO MORE THAN IRRITATION. WASH OFF IN FLOWING WATER OR SHOWER. WASH CLOTHING BEFORE REUSE.
INHALATION: REMOVE TO FRESH AIR IF EFFECTS OCCUR. CONSULT MEDICAL PERSONNEL.
INGESTION: LOW IN TOXICITY. INDUCE VOMITING IF LARGE AMOUNTS ARE INGESTED.

NOTE TO PHYSICIAN:
EYES: MAY CAUSE MILD IRRITATION. STAIN FOR EVIDENCE OF CORNEAL INJURY.
SKIN: MAY CAUSE MILD IRRITATION. IF RASH IS PRESENT TREAT AS ANY CONTACT DERMATITIS. NOT LIKELY TO BE ABSORBED IN ACUTELY TOXIC AMOUNTS.
RESPIRATORY: MAY CAUSE MODERATE IRRITATION. ADMINISTER OXYGEN IF AVAILABLE. BRONCHODILATORS, EXPECTORANTS, AND ANTITUSSIVES MAY BE OF HELP.
ORAL: LOW IN TOXICITY.
SYSTEMIC: CONSULT STANDARD LITERATURE. ANIMAL STUDIES INDICATE KIDNEY, LIVER AND LUNGS ARE TARGET ORGANS WITH OVEREXPOSURE. WITH OVEREXPOSURE MAY HAVE INCREASED R.B.C. FRAGILITY. NO SPECIFIC ANTIDOTE. TREATMENT BASED ON THE SOUND JUDGMENT OF THE PHYSICIAN AND THE INDIVIDUAL REACTIONS OF THE PATIENT.

SECTION 7 SPECIAL HANDLING INFORMATION

VENTILATION: RECOMMEND CONTROL OF VAPORS OR MIST TO SUGGESTED GUIDE.
RESPIRATORY PROTECTION: NIOSH APPROVED RESPIRATORY PROTECTION REQUIRED IN ABSENCE OF PROPER ENVIRONMENTAL CONTROL. FOR EMERGENCIES, A SELF-CONTAINED BREATHING APPARATUS OR A FULL-FACE RESPIRATOR AS APPROVED BY NIOSH IS RECOMMENDED.
PROTECTIVE CLOTHING: CLEAN, BODY-COVERING CLOTHING.
EYE PROTECTION: SAFETY GLASSES WITHOUT SIDE SHIELDS. WASHING FACILITIES NEAR WORK AREA.

(CONTINUED ON PAGE 3)
(R) INDICATES A REGISTERED OR TRADEMARK NAME OF THE DOW CHEMICAL COMPANY

DOW CHEMICAL U.S.A. MIDLAND MICHIGAN 48640 EMERGENCY PHONE: 517-636-4400

EFFECTIVE DATE: 02 JAN 79 PRODUCT CODE: 22377
PRODUCT (CONT'D): DOWANOL (R) EE MSD: 0047

SECTION 8 SPECIAL PRECAUTIONS AND ADDITIONAL INFORMATION

PRECAUTIONS TO BE TAKEN IN HANDLING AND STORAGE: GROUND ALL EQUIPMENT. PRACTICE GOOD CARE TO AVOID SKIN CONTACT AND TO AVOID INHALATION OF VAPORS.
ADDITIONAL INFORMATION: ----

LAST PAGE

(R) INDICATES A REGISTERED OR TRADEMARK NAME OF THE DOW CHEMICAL COMPANY

THE INFORMATION HEREIN IS GIVEN IN GOOD FAITH, BUT NO WARRANTY, EXPRESSED OR IMPLIED, IS MADE.

M A T E R I A L S A F E T Y D A T A S H E E T

DOW CHEMICAL U.S.A. MIDLAND MICHIGAN 48640 EMERGENCY PHONE: 517-636-4400

EFFECTIVE DATE: 02 JAN 79 PRODUCT CODE: 22366

PRODUCT NAME: DOWANOL (R) EB (ETHYLENE GLYCOL BUTYL ETHER) MSD: 0046

INGREDIENTS (TYPICAL VALUES-NOT SPECIFICATIONS)	%
ETHYLENE GLYCOL N-BUTYL ETHER (MIN)	95

SECTION 1 PHYSICAL DATA

BOILING POINT: 340F
VAP PRESS: 0.88 MMHG @ 25C
VAP DENSITY (AIR=1): 4.10
SOL. IN WATER: INFINITELY
SP. GRAVITY: .897 @ 25/25C
% VOLATILE BY VOL: 100
APPEARANCE AND ODOR: WATER WHITE LIQUID - ETHER-LIKE ODOR.

SECTION 2 FIRE AND EXPLOSION HAZARD DATA

FLASH POINT: 150F
METHOD USED: TAG CLOSED CUP
FLAMMABLE LIMITS (STP IN AIR)
LFL: 1.1% VOL. UFL: 10.6% VOL.
EXTINGUISHING MEDIA: ALCOHOL FOAM, CO2, DRY CHEMICAL.
SPECIAL FIRE FIGHTING EQUIPMENT AND HAZARDS: ----

SECTION 3 REACTIVITY DATA

STABILITY: ----
INCOMPATIBILITY: OXIDIZING MATERIAL.
HAZARDOUS DECOMPOSITION PRODUCTS: NONE
HAZARDOUS POLYMERIZATION: WILL NOT OCCUR.

SECTION 4 SPILL, LEAK, AND DISPOSAL PROCEDURES

ACTION TO TAKE FOR SPILLS (USE APPROPRIATE SAFETY EQUIPMENT): ADD ABSORBEN
REMOVE WITH RUBBER SHOVEL.
DISPOSAL METHOD: BURN IN ACCORDANCE WITH LOCAL LAWS.

SECTION 5 HEALTH HAZARD DATA

INGESTION: MODERATE SINGLE DOSE TOXICITY, LD50 (RATS): 470 MG/KG; (RABBITS
320 MG/KG.
EYE CONTACT: SLIGHT PAIN, MODERATE IRRITATION AND CORNEAL INJURY,
SHOULD HEAL IN 1-2 WEEKS.
SKIN CONTACT: ESSENTIALLY NON-IRRITATING.
SKIN ABSORPTION: MODERATELY TO HIGHLY TOXIC BY ABSORPTION. LD50 (RABBITS)
220 MG/KG - READILY ABSORBED.

(CONTINUED ON PAGE 2)
(R) INDICATES A REGISTERED OR TRADEMARK NAME OF THE DOW CHEMICAL COMPANY

SECTION 5 HEALTH HAZARD DATA (CONTINUED)

INHALATION: OSHA GUIDE AND ACGIH TLV IS 50 PPM (1978).
EFFECTS OF OVEREXPOSURE: ACUTE EFFECT: NARCOSIS. DELAYED EFFECTS: BLOOD EFFECTS AND ORGANIC INJURY IN LIVER AND KIDNEY.

SECTION 6 FIRST AID--NOTE TO PHYSICIAN

FIRST AID PROCEDURES:

EYES: IRRIGATE WITH FLOWING WATER IMMEDIATELY AND CONTINUOUSLY FOR 15 MINUTES. REFER TO MEDICAL PERSONNEL.
SKIN: IN CASE OF CONACT, IMMEDIATELY FLUSH SKIN WITH PLENTY OF WATER FOR AT LEAST 15 MINUTES WHILE REMOVING CONTAMINATED CLOTHING AND SHOES CALL A PHYSICIAN. WASH CLOTHING BEFORE REUSE. DESTROY CONTAMINATED SHOES.
INHALATION: REMOVE TO FRESH AIR IF EFFECTS OCCUR. CALL PHYSICIAN AND/OR TRANSPORT TO MEDICAL FACILITY.
INGESTION: IF SWALLOWED, INDUCE VOMITING IMMEDIATELY BY GIVING TWO GLASSES OF WATER AND STICKING FINGER DOWN THROAT. CALL A PHYSICIAN.

NOTE TO PHYSICIAN:
EYES: MAY CAUSE CORNEAL INJURY OR BURN. STAIN FOR EVIDENCE OF CORNEAL INJURY. IF CORNEA IS BURNED, INSTILL ANTIBIOTIC STEROID PREPARATION FREQUENTLY. CONSULT OPHTHALMOLOGIST.
SKIN: MAY CAUSE MILD IRRITATION. TREAT AS ANY CONTACT DERMATITIS. MAY BE ABSORBED IN ACUTELY TOXIC AMOUNTS.
RESPIRATORY: MAY CAUSE MODERATE IRRITATION TO LUNGS. ANESTHETIC OR NARCOTIC EFFECT MAY OCCUR. ADMINISTER OXYGEN IF AVAILABLE. BRONCHODILATORS, EXPECTORANTS, AND ANTITUSSIVES MAY BE OF HELP.
ORAL: MODERATELY TOXIC.
SYSTEMIC: RAT STUDY SUGGESTS KIDNEY IS PRIMARY TARGET ORGAN WITH OVEREXPOSURE BUT SOME LIVER CHANGES MAY ALSO BE EVIDENT. INCREASED R.B.C. FRAGILITY SEEN WITH OVEREXPOSURE. CONSULT STANDARD LITERATURE. NO SPECIFIC ANTIDOTE. TREATMENT BASED ON THE SOUND JUDGMENT OF THE PHYSICIAN AND THE INDIVIDUAL REACTIONS OF THE PATIENT.

SECTION 7 SPECIAL HANDLING INFORMATION

VENTILATION: RECOMMEND CONTROL OF VAPOR OR MIST TO SUGGESTED GUIDE.
RESPIRATORY PROTECTION: NIOSH APPROVED RESPIRATORY PROTECTION REQUIRED IN ABSENCE OF PROPER ENVIRONMENTAL CONTROL. FOR EMERGENCIES, A SELF-CONTAINED BREATHING APPARATUS OR A FULL-FACE RESPIRATOR AS APPROVED BY NIOSH IS RECOMMENDED.
PROTECTIVE CLOTHING: CLEAN, BODY-COVERING CLOTHING. IN ADDITION, IMPERVIO GLOVES, BOOTS, APRON, GAUNTLETS, AND A FACE SHIELD IN ADDITION TO RECOMMENDED EYE PROTECTION DEPENDING UPON THE EXTENT AND SEVERITY OF EXPOSURE LIKELY.

(CONTINUED ON PAGE 3)
(R) INDICATES A REGISTERED OR TRADEMARK NAME OF THE DOW CHEMICAL COMPANY

DOW CHEMICAL U.S.A. MIDLAND MICHIGAN 48640 EMERGENCY PHONE: 517-636-[illegible]

EFFECTIVE DATE: 02 JAN 79 PRODUCT CODE: 22366
PRODUCT (CONT'D): DOWANOL (R) EB (ETHYLENE GLYCOL BUTYL ETHER) MSD: 0046
EYE PROTECTION: CHEMICAL WORKERS GOGGLES. EYE FOUNTAIN & WASHING FACILITIES NEAR WORK AREA.

SECTION 8 SPECIAL PRECAUTIONS AND ADDITIONAL INFORMATION

PRECAUTIONS TO BE TAKEN IN HANDLING AND STORAGE: GROUND ALL EQUIPMENT. HANDLE WITH CARE. AVOID ALL SKIN AND EYE CONTACT. AVOID BREATHING VAPOR.
ADDITIONAL INFORMATION: ----

LAST PAGE

(R) INDICATES A REGISTERED OR TRADEMARK NAME OF THE DOW CHEMICAL COMPANY

THE INFORMATION HEREIN IS GIVEN IN GOOD FAITH, BUT NO WARRANTY, EXPRESSED OR IMPLIED, IS MADE.

M A T E R I A L S A F E T Y D A T A S H E E T

DOW CHEMICAL U.S.A. MIDLAND MICHIGAN 48640 EMERGENCY PHONE: 517-636-4400

EFFECTIVE DATE: 02 JAN 79 PRODUCT CODE: 22316

PRODUCT NAME: DOWANOL (R) DE MSD: 0042

INGREDIENTS (TYPICAL VALUES-NOT SPECIFICATIONS)	%
DIETHYLENE GLYCOL ETHYL ETHER	95

SECTION 1 PHYSICAL DATA

BOILING POINT: 395F : SOL. IN WATER: COMPLETELY MISCIBLE.
VAP PRESS: 0.26 MMHG @ 25C : SP. GRAVITY: 0.988 @ 25/25C
VAP DENSITY (AIR=1): 4.65 : % VOLATILE BY VOL: 100
APPEARANCE AND ODOR: COLORLESS LIQUID.

SECTION 2 FIRE AND EXPLOSION HAZARD DATA

FLASH POINT: 196F : FLAMMABLE LIMITS (STP IN AIR)
METHOD USED: TAG CLOSED CUP : LFL: 1.2 VOL.% UFL: 9.0 VOL.%
EXTINGUISHING MEDIA: WATER FOG, ALCOHOL FOAM, CO2, DRY CHEMICAL.
SPECIAL FIRE FIGHTING EQUIPMENT AND HAZARDS: NONE

SECTION 3 REACTIVITY DATA

STABILITY: ----
INCOMPATIBILITY: ----
HAZARDOUS DECOMPOSITION PRODUCTS: ----
HAZARDOUS POLYMERIZATION: WILL NOT OCCUR.

SECTION 4 SPILL, LEAK, AND DISPOSAL PROCEDURES

ACTION TO TAKE FOR SPILLS (USE APPROPRIATE SAFETY EQUIPMENT): ADD ABSORBENT REMOVE WITH RUBBER SHOVEL.
DISPOSAL METHOD: BURN IN ACCORDANCE WITH LOCAL LAWS.

SECTION 5 HEALTH HAZARD DATA

INGESTION: LOW SINGLE DOSE ORAL TOXICITY; LD50 FOR RATS, RABBITS, ETC. 4900 TO 9700 MG/KG.
EYE CONTACT: MILD PAIN, MINOR TRANSIENT IRRITATION, NO CORNEAL INJURY EXPECTED.
SKIN CONTACT: ESSENTIALLY NO IRRITATION; HUMAN TESTS INDICATE THAT IT IS NOT A SENSITIZER.

(CONTINUED ON PAGE 2)
(R) INDICATES A REGISTERED OR TRADEMARK NAME OF THE DOW CHEMICAL COMPANY

SECTION 5 HEALTH HAZARD DATA (CONTINUED)

SKIN ABSORPTION: LOW IN TOXICITY FOR SINGLE DOSE. MODERATE FOR REPEATED DOSES IN RABBITS. HUMAN EXPERIENCE AND TESTS INDICATE THAT IT IS NOT ABSORBED THROUGH SKIN BY HUMANS.
INHALATION: NO GUIDE FOR CONTROL KNOWN.
EFFECTS OF OVEREXPOSURE: BY INGESTION IN RATS - DISTURBANCE OF BALANCE, GASTRO-INTESTINAL INFLAMMATION AND KIDNEY INJURY.

SECTION 6 FIRST AID--NOTE TO PHYSICIAN

FIRST AID PROCEDURES:

EYES: IRRIGATION OF THE EYE IMMEDIATELY WITH WATER FOR FIVE MINUTES IS GOOD SAFETY PRACTICE.
SKIN: CONTACT WILL PROBABLY CAUSE NO MORE THAN IRRITATION. WASH OFF IN FLOWING WATER OR SHOWER. WASH CLOTHING BEFORE REUSE.
INHALATION: REMOVE TO FRESH AIR IF EFFECTS OCCUR. CONSULT MEDICAL PERSONNEL.
INGESTION: LOW IN TOXICITY. INDUCE VOMITING IF LARGE AMOUNTS ARE INGESTED.

NOTE TO PHYSICIAN:
EYES: MAY CAUSE MILD IRRITATION. STAIN FOR EVIDENCE OF CORNEAL INJURY.
SKIN: MAY CAUSE MILD IRRITATION. TREAT AS ANY CONTACT DERMATITIS. NOT LIKELY TO BE ABSORBED IN ACUTELY TOXIC AMOUNTS.
RESPIRATORY: INJURY IS UNLIKELY.
ORAL: LOW IN TOXICITY.
SYSTEMIC: CONSULT STANDARD LITERATURE. HUMAN EFFECTS NOT ESTABLISHED. NO SPECIFIC ANTIDOTE. TREATMENT BASED ON THE SOUND JUDGMENT OF THE PHYSICIAN AND THE INDIVIDUAL REACTIONS OF THE PATIENT.

SECTION 7 SPECIAL HANDLING INFORMATION

VENTILATION: GOOD ROOM VENTILATION USUALLY ADEQUATE FOR MOST OPERATIONS.
RESPIRATORY PROTECTION: NONE NORMALLY NEEDED. NIOSH APPROVED RESPIRATORY PROTECTION REQUIRED IN ABSENCE OF PROPER ENVIRONMENTAL CONTROL. FOR EMERGENCIES, A SELF-CONTAINED BREATHING APPARATUS OR A FULL-FACE RESPIRATOR AS APPROVED BY NIOSH IS RECOMMENDED.
PROTECTIVE CLOTHING: CLEAN, BODY-COVERING CLOTHING.
EYE PROTECTION: SAFETY GLASSES WITHOUT SIDE SHIELDS.

SECTION 8 SPECIAL PRECAUTIONS AND ADDITIONAL INFORMATION

PRECAUTIONS TO BE TAKEN IN HANDLING AND STORAGE: PRACTICE REASONABLE CARE AND CAUTION TO AVOID SKIN AND EYE CONTACT. AVOID BREATHING VAPORS OR MISTS IF GENERATED.

(CONTINUED ON PAGE 3)
(R) INDICATES A REGISTERED OR TRADEMARK NAME OF THE DOW CHEMICAL COMPANY

EFFECTIVE DATE: 02 JAN 79 PRODUCT CODE: 22316
PRODUCT (CONT'D): DOWANOL (R) DE MSD: 0042

SECTION 8 SPECIAL PRECAUTIONS AND ADDITIONAL INFORMATION (CONTINUED)

ADDITIONAL INFORMATION: ----

LAST PAGE

(R) INDICATES A REGISTERED OR TRADEMARK NAME OF THE DOW CHEMICAL COMPANY

THE INFORMATION HEREIN IS GIVEN IN GOOD FAITH, BUT NO WARRANTY, EXPRESSED OR IMPLIED, IS MADE.

MATERIAL SAFETY DATA SHEET

DOW CHEMICAL U.S.A. MIDLAND MICHIGAN 48640 EMERGENCY PHONE: 517-636-4400

EFFECTIVE DATE: 02 JAN 79 PRODUCT CODE: 22305

PRODUCT NAME: DOWANOL (R) DB MSD: 0041

INGREDIENTS (TYPICAL VALUES-NOT SPECIFICATIONS)	%
DIETHYLENE GLYCOL N-BUTYL ETHER	95

SECTION 1 PHYSICAL DATA

BOILING POINT: 446F
VAP PRESS: .06 MMHG @ 25C
VAP DENSITY (AIR=1): 5.62
SOL. IN WATER: COMPLETELY MISCIBLE.
SP. GRAVITY: 0.952 @ 25/25C
% VOLATILE BY VOL: 100%
APPEARANCE AND ODOR: COLORLESS, MILD - LIQUID.

SECTION 2 FIRE AND EXPLOSION HAZARD DATA

FLASH POINT: 222F
METHOD USED: TCC
FLAMMABLE LIMITS (STP IN AIR)
LFL: NOT DETER. UFL: NOT DETER.
EXTINGUISHING MEDIA: WATER FOG, ALCOHOL FOAM, CO2, DRY CHEMICAL.
SPECIAL FIRE FIGHTING EQUIPMENT AND HAZARDS: ----

SECTION 3 REACTIVITY DATA

STABILITY: ----
INCOMPATIBILITY: OXIDIZING MATERIALS.
HAZARDOUS DECOMPOSITION PRODUCTS: ----
HAZARDOUS POLYMERIZATION: WILL NOT OCCUR.

SECTION 4 SPILL, LEAK, AND DISPOSAL PROCEDURES

ACTION TO TAKE FOR SPILLS (USE APPROPRIATE SAFETY EQUIPMENT): ADD ABSORBENT REMOVE WITH SHOVEL.
DISPOSAL METHOD: BURN IN ACCORDANCE WITH LOCAL LAWS.

SECTION 5 HEALTH HAZARD DATA

INGESTION: LOW SINGLE DOSE TOXICITY: LD50 (RATS) 5660, (GUINEA PIGS) 2000 MG/KG.
EYE CONTACT: MODERATE IRRITATION AND MODERATE TRANSIENT CORNEAL INJURY.
SKIN CONTACT: VERY SLIGHT IRRITATION.
SKIN ABSORPTION: LOW SINGLE DOSE TOXICITY. LD50 RABBITS 4000 MG/KG.
INHALATION: NO GUIDE FOR CONTROL KNOWN.

(CONTINUED ON PAGE 2)
(R) INDICATES A REGISTERED OR TRADEMARK NAME OF THE DOW CHEMICAL COMPANY

SECTION 5 HEALTH HAZARD DATA (CONTINUED)

EFFECTS OF OVEREXPOSURE: ----

SECTION 6 FIRST AID--NOTE TO PHYSICIAN

FIRST AID PROCEDURES:

EYES: IRRIGATE WITH FLOWING WATER IMMEDIATELY AND CONTINUOUSLY FOR 15 MINUTES. REFER TO MEDICAL PERSONNEL.
SKIN: CONTACT WILL PROBABLY CAUSE NO MORE THAN IRRITATION. WASH OFF IN FLOWING WATER OR SHOWER. WASH CLOTHING BEFORE REUSE.
INHALATION: REMOVE TO FRESH AIR IF EFFECTS OCCUR. CONSULT MEDICAL PERSONNEL.
INGESTION: LOW IN TOXICITY. INDUCE VOMITING IF LARGE AMOUNTS ARE INGESTED.

NOTE TO PHYSICIAN:
EYES: MAY CAUSE CORNEAL INJURY OR BURN. STAIN FOR EVIDENCE OF CORNEAL INJURY. IF CORNEA IS BURNED, INSTILL ANTIBIOTIC STEROID PREPARATION FREQUENTLY. CONSULT OPHTHALMOLOGIST.
SKIN: MAY CAUSE MILD IRRITATION. CHRONIC EXPOSURE MAY CAUSE DEFATTING TYPE OF DERMATITIS. TREAT AS ANY CONTACT DERMATITIS. NOT LIKELY TO BE ABSORBED IN ACUTELY TOXIC AMOUNTS.
RESPIRATORY: INJURY IS UNLIKELY.
ORAL: LOW IN TOXICITY.
SYSTEMIC: HUMAN EFFECTS NOT ESTABLISHED. CONSULT STANDARD LITERATURE. NO SPECIFIC ANTIDOTE. TREATMENT BASED ON THE SOUND JUDGMENT OF THE PHYSICIAN AND THE INDIVIDUAL REACTION OF THE PATIENT.

SECTION 7 SPECIAL HANDLING INFORMATION

VENTILATION: GOOD ROOM VENTILATION USUALLY ADEQUATE FOR MOST OPERATIONS.
RESPIRATORY PROTECTION: NONE NORMALLY NEEDED. NIOSH APPROVED RESPIRATORY PROTECTION REQUIRED IN ABSENCE OF PROPER ENVIRONMENTAL CONTROL. FOR EMERGENCIES, A SELF-CONTAINED BREATHING APPARATUS OR A FULL-FACE RESPIRATOR AS APPROVED BY NIOSH IS RECOMMENDED.
PROTECTIVE CLOTHING: CLEAN, BODY-COVERING CLOTHING.
EYE PROTECTION: SAFETY GLASSES WITHOUT SIDE SHIELDS. EYE FOUNTAIN & WASHING FACILITIES NEAR WORK AREA.

SECTION 8 SPECIAL PRECAUTIONS AND ADDITIONAL INFORMATION

PRECAUTIONS TO BE TAKEN IN HANDLING AND STORAGE: AVOID EYE CONTACT. PRACTICE REASONABLE CARE TO AVOID SKIN CONTACT. AVOID BREATHING VAPORS OR MISTS IF GENERATED.

(CONTINUED ON PAGE 3)
(R) INDICATES A REGISTERED OR TRADEMARK NAME OF THE DOW CHEMICAL COMPANY

DOW CHEMICAL U.S.A. MIDLAND MICHIGAN 48640 EMERGENCY PHONE: 517-636-4400

EFFECTIVE DATE: 02 JAN 79 PRODUCT CODE: 22305
PRODUCT (CONT'D): DOWANOL (R) DB MSD: 0041

SECTION 8 SPECIAL PRECAUTIONS AND ADDITIONAL INFORMATION (CONTINUED)

ADDITIONAL INFORMATION: ----

LAST PAGE

(R) INDICATES A REGISTERED OR TRADEMARK NAME OF THE DOW CHEMICAL COMPANY

THE INFORMATION HEREIN IS GIVEN IN GOOD FAITH, BUT NO WARRANTY, EXPRESSED OR IMPLIED, IS MADE.

EASTMAN KODAK COMPANY
APPROVED BY U.S. DEPARTMENT OF LABOR
"ESSENTIALLY SIMILAR" TO FORM OSHA-20

MATERIAL SAFETY DATA SHEET

SECTION I

PRODUCT NAME:	KODAFLEX® DOP Plasticizer	SIZE:	Not applicable
CHEMICAL NAME:	Dioctyl Phthalate [Bis(2-ethylhexyl) Phthalate]		
FORMULA:	$C_6H_4(COOCH_2CH(C_2H_5)C_4H_9)_2$		
MANUFACTURER:	Marketed by Eastman Chemical Products, Inc.		
ADDRESS:	Kingsport, Tennessee 37662		
FOR INFORMATION ON HEALTH HAZARDS CALL:	615-247-0411, Extension 3613		
FOR OTHER INFORMATION CALL:	Same number as above Extension 5109	INFORMATION EFFECTIVE AS OF:	October, 1976

SECTION II HAZARDOUS INGREDIENTS OF MIXTURES

PRINCIPAL HAZARDOUS COMPONENT (S)	%	TLV (Units)
Not applicable		

SECTION III PHYSICAL DATA

BOILING POINT (°F.)	724°F (384°C)	SPECIFIC GRAVITY ($H_2O = 1$)	0.985 @ 20°/20°C
VAPOR PRESSURE (mm Hg.)	1.2 @ 200°C	PERCENT VOLATILE BY VOLUME (%)	Not applicable
VAPOR DENSITY (AIR = 1)	13.5	EVAPORATION RATE ([illegible] = 1)	Not applicable
SOLUBILITY IN WATER	Negligible		
APPEARANCE AND ODOR	Clear liquid, little or no odor.		

SECTION IV FIRE AND EXPLOSION HAZARD DATA

FLASH POINT (Method used) 420°F (216°C) COC	FLAMMABLE LIMITS @ 492°F (255°C)	Lel 0.31%	Uel Not known to Eastman
EXTINGUISHING MEDIA	Dry Chemical, Water Spray, Carbon Dioxide		
SPECIAL FIRE FIGHTING PROCEDURES	Approved respirators should be worn.		
UNUSUAL FIRE AND EXPLOSION HAZARDS	None known to Eastman.		

SECTION V HEALTH HAZARD DATA

THRESHOLD LIMIT VALUE	5 mg/m^3
EFFECTS OF OVEREXPOSURE	None expected
EMERGENCY AND FIRST AID PROCEDURES	Eye contact: Irrigate eyes immediately and thoroughly with water.

SECTION VI REACTIVITY DATA

STABILITY	UNSTABLE		CONDITIONS TO AVOID
	STABLE	X	Not applicable

INCOMPATIBILITY (Materials to avoid)	Oxidizing materials can cause a reaction.
HAZARDOUS DECOMPOSITION PRODUCTS	As with any other organic material, combustion will produce carbon dioxide and probably carbon monoxide.

HAZARDOUS POLYMERIZATION		CONDITIONS TO AVOID
May Occur	Will Not Occur X	Not applicable

SECTION VII SPILL OR LEAK PROCEDURES

STEPS TO BE TAKEN IN CASE MATERIAL IS RELEASED OR SPILLED	Soak up on absorbent material for incineration.
WASTE DISPOSAL METHOD	Incineration

SECTION VIII SPECIAL PROTECTION INFORMATION

RESPIRATORY PROTECTION (Specify type)	Approved respirators should be worn if needed.

VENTILATION				
	LOCAL EXHAUST X	if needed to control vapor at elevated temperatures	SPECIAL	None known to Eastman
	MECHANICAL (general) X		OTHER	None knwon to Eastman

PROTECTIVE GLOVES	None should be needed	EYE PROTECTION	Safety glasses should be worn in any type of industrial operation.
OTHER PROTECTIVE EQUIPMENT	None should be needed		

SECTION IX SPECIAL PRECAUTIONS

PRECAUTIONS TO BE TAKEN IN HANDLING AND STORING	Use with ventilation adequate to maintain vapor concentrations below the TLV of 5 mg/m^3.
OTHER PRECAUTIONS	None known to Eastman

The information contained herein is furnished without warranty of any kind. Employers should use this information only as a supplement to other information gathered by them and must make independent determinations of suitability and completeness of information from all sources to assure proper use of these materials and the safety and health of employees.

MATERIAL SAFETY DATA SHEET

PAGE: 1

DOW CHEMICAL U.S.A. MIDLAND MICHIGAN 48640 EMERGENCY PHONE: 517-636-4400

EFFECTIVE DATE: 20 JUL 78 PRODUCT CODE: 21603

PRODUCT NAME: DIPROPYLENE GLYCOL MSD: 0075

INGREDIENTS (TYPICAL VALUES-NOT SPECIFICATIONS)	%
DIPROPYLENE GLYCOL	99

SECTION 1 PHYSICAL DATA

BOILING POINT: 449.2F
VAP PRESS: 0.03 MMHG @ 20C
VAP DENSITY (AIR=1): 4.63
SOL. IN WATER: COMPLETELY MISCIBLE
SP. GRAVITY: 1.0355 @ 40C
% VOLATILE BY VOL: NOT APPLICABLE
APPEARANCE AND ODOR: COLORLESS LIQUID WITH PRACTICALLY NO ODOR.

SECTION 2 FIRE AND EXPLOSION HAZARD DATA

FLASH POINT: 250F
METHOD USED: PMCC
FLAMMABLE LIMITS (STP IN AIR)
LFL: NOT DETER. UFL: NOT DETER.
EXTINGUISHING MEDIA: WATER FOG, ALCOHOL FOAM, CO2, DRY CHEMICAL.
SPECIAL FIRE FIGHTING EQUIPMENT AND HAZARDS: NONE REQUIRED.

SECTION 3 REACTIVITY DATA

STABILITY: ----
INCOMPATIBILITY: OXIDIZING MATERIAL.
HAZARDOUS DECOMPOSITION PRODUCTS: ALDEHYDES AND ACIDS.
HAZARDOUS POLYMERIZATION: WILL NOT OCCUR.

SECTION 4 SPILL, LEAK, AND DISPOSAL PROCEDURES

ACTION TO TAKE FOR SPILLS (USE APPROPRIATE SAFETY EQUIPMENT): FOR LARGE SPILLS, USE CONTAINMENT DIKE IF POSSIBLE. RECOVER WITH VACUUM TRUCK. SMALL AMOUNT CAN BE SOAKED UP WITH ABSORBENT MATERIAL AND SHOVELED INTO DRUMS. WASH DOWN REMAINING SMALL AMOUNT WITH WATER.
DISPOSAL METHOD: RECOVER LARGE QUANTITIES BY REPROCESSING OR BURN ACCORDING TO FEDERAL, STATE, AND LOCAL LAWS.

SECTION 5 HEALTH HAZARD DATA

INGESTION: VERY LOW SINGLE DOSE TOXICITY: LD50 FOR RATS 14800 MG/KG.
EYE CONTACT: UP TO MINOR IRRITATION.
SKIN CONTACT: ESSENTIALLY NO IRRITATION.

(CONTINUED ON PAGE 2)
(R) INDICATES A REGISTERED OR TRADEMARK NAME OF THE DOW CHEMICAL COMPANY

DOW CHEMICAL U.S.A. MIDLAND MICHIGAN 48640 EMERGENCY PHONE: 517-636-4400

EFFECTIVE DATE: 20 JUL 78 PRODUCT CODE: 21603
PRODUCT (CONT'D): DIPROPYLENE GLYCOL MSD: 0075

SECTION 5 HEALTH HAZARD DATA (CONTINUED)

SKIN ABSORPTION: NOT LIKELY TO BE ABSORBED IN ACUTELY TOXIC AMOUNTS.
INHALATION: NO GUIDE FOR CONTROL KNOWN.
EFFECTS OF OVEREXPOSURE: ----

SECTION 6 FIRST AID--NOTE TO PHYSICIAN

FIRST AID PROCEDURES:

EYES: IRRIGATION OF THE EYE IMMEDIATELY WITH WATER FOR FIVE MINUTES IS GOOD SAFETY PRACTICE.
SKIN: WASH OFF IN FLOWING WATER. WASH CLOTHING BEFORE REUSE.
INHALATION: REMOVE TO FRESH AIR IF EFFECTS OCCUR. CONSULT MEDICAL PERSONNEL.
INGESTION: LOW IN TOXICITY. INDUCE VOMITING IF LARGE AMOUNTS ARE INGESTED.

NOTE TO PHYSICIAN:
EYES: INJURY IS UNLIKELY.
SKIN AND RESPIRATORY: NO EFFECT EXPECTED.
ORAL: LOW IN TOXICITY.
SYSTEMIC: HUMAN EFFECTS NOT ESTABLISHED. NO SPECIFIC ANTIDOTE. TREATMENT BASED ON THE SOUND JUDGMENT OF THE PHYSICIAN AND THE INDIVIDUAL REACTIONS OF THE PATIENT.

SECTION 7 SPECIAL HANDLING INFORMATION

VENTILATION: GOOD ROOM VENTILATION USUALLY ADEQUATE FOR MOST OPERATIONS.
RESPIRATORY PROTECTION: NONE LIKELY TO BE NEEDED.
PROTECTIVE CLOTHING: CLEAN CLOTHING.
EYE PROTECTION: NOT NORMALLY NECESSARY.

SECTION 8 SPECIAL PRECAUTIONS AND ADDITIONAL INFORMATION

PRECAUTIONS TO BE TAKEN IN HANDLING AND STORAGE: PRACTICE COMMON SENSE TO AVOID EXCESSIVE SKIN CONTACT AND EYE EXPOSURE.
ADDITIONAL INFORMATION: ----

LAST PAGE

(R) INDICATES A REGISTERED OR TRADEMARK NAME OF THE DOW CHEMICAL COMPANY

THE INFORMATION HEREIN IS GIVEN IN GOOD FAITH, BUT NO WARRANTY, EXPRESSED OR IMPLIED, IS MADE.

M A T E R I A L S A F E T Y D A T A S H E E T PAGE: 1

DOW CHEMICAL U.S.A. MIDLAND MICHIGAN 48640 EMERGENCY PHONE: 517-636-4400

EFFECTIVE DATE: 25 SEP 78 PRODUCT CODE: 21326

PRODUCT NAME: DIISOPROPANOLAMINE MSD: 0072

INGREDIENTS (TYPICAL VALUES-NOT SPECIFICATIONS)	%
DIISOPROPANOLAMINE, MINIMUM	99

SECTION 1 PHYSICAL DATA

BOILING POINT: 486F 5MM HG : SOL. IN WATER: COMPLETELY MISCIBLE.
VAP PRESS: < 0.1 MMHG @ 20C : SP. GRAVITY: 1.0 30\4C
VAP DENSITY (AIR=1): ---- : % VOLATILE BY VOL: ----
APPEARANCE AND ODOR: WHITE SOLID - SLIGHTLY AMMONIACAL ODOR.

SECTION 2 FIRE AND EXPLOSION HAZARD DATA

FLASH POINT: 280F : FLAMMABLE LIMITS (STP IN AIR)
METHOD USED: PMCC : LFL: ---- UFL: ----
EXTINGUISHING MEDIA: WATER FOG, ALCOHOL FOAM.
SPECIAL FIRE FIGHTING EQUIPMENT AND HAZARDS: ----

SECTION 3 REACTIVITY DATA

STABILITY: ----
INCOMPATIBILITY: OXIDIZING MATERIAL.
HAZARDOUS DECOMPOSITION PRODUCTS: ----
HAZARDOUS POLYMERIZATION: WILL NOT OCCUR.

SECTION 4 SPILL, LEAK, AND DISPOSAL PROCEDURES

ACTION TO TAKE FOR SPILLS (USE APPROPRIATE SAFETY EQUIPMENT): SOAK UP WITH ABSORBENT MATERIAL OR SAND, IF LIQUID; OTHERWISE, SCRAPE UP.
DISPOSAL METHOD: BURN IN INCINERATOR.

SECTION 5 HEALTH HAZARD DATA

INGESTION: LOW SINGLE DOSE ORAL TOXICITY; LD50 (RAT) IN RANGE OF 2000 TO 4000 MG/KG.
EYE CONTACT: MODERATE TO SEVERE IRRITATION, MODERATE CORNEAL INJURY, POSSIBLE PERMANENT IMPAIRMENT OF VISION.
SKIN CONTACT: SHORT CONTACT - SLIGHT IRRITATION; PROLONGED AND REPEATED CONTACT - UP TO SEVERE IRRITATION, SLIGHT TO MODERATE BURN.

(CONTINUED ON PAGE 2)
(R) INDICATES A REGISTERED OR TRADEMARK NAME OF THE DOW CHEMICAL COMPANY

APPENDIX H

CONTINGENCY PLAN TRANSMITTAL LETTER

June 8, 1982

Suffolk County Police Department
Administrative Bureau
Yaphank Avenue
Yaphank, New York 11908

Re: Pride Solvents & Chemical Company, Incorporated Contingency Plan

Attention: Officer Dominick Parella

Gentlemen:

Enclosed please find an updated Contingency Plan for your Department's use in the event of an emergency condition at the above-referenced facility. This will supersede Pride Solvents' Contingency Plan of May, 1981.

We have provided within the context of the Report, a more comprehensive outline of the facility's operations, details on bulk and drum storage, reclamation processes, location map, site plan, emergency coordinators, emergency response procedures, emergency equipment, evacuation plan and coordination agreements. The plan also includes safety material data sheets provided by the various manufacturers for the chemicals handled at the facility.

Please note that additional copies of this plan have been forwarded to: Suffolk County Department of Health Services, Suffolk County Fire Safety Department, East Farmingdale Fire Department, Town of Babylon Director of Fire Safety, New York State Department of Environmental Conservation Region I and Albany and Brunswick Hospital Center.

GH
CM
EM
HAD
DF
JJM
AS
GEL
DEPT
CAD
DJ
NGR
GR
VIR
AB
TG
YES NO

If you should have any questions or comments, please call or write this office.

Very truly yours,

HOLZMACHER, McLENDON & MURRELL, P.C.

Gary J. Miller

GJM/lml

cc: James Pim, Suffolk County Department of Health Services
Ronald Buckingham, Suffolk County Fire Safety Department
Gilbert Hanse, Jr., Town of Babylon
Morris Bruckman, P.E., NYSDEC, Region I
James Moran, NYSDEC, Albany
Dr. Donald Stien, Brunswick Hospital Center
East Farmingdale Fire Department

Attachment V

HOLZMACHER, McLENDON & MURRELL, P.C.

CLOSURE PLAN

PRIDE SOLVENTS & CHEMICAL CO., INC.

JANUARY 1988

HOLZMACHER, McLENDON & MURRELL, P.C.

CLOSURE PLAN

PRIDE SOLVENTS & CHEMICAL CO., INC.

TABLE OF CONTENTS

	PAGE NO.
1.0 GENERAL INFORMATION	1
1.1 SCOPE	1
1.2 PROCESS OPERATIONS	1
2.0 CLOSURE	2
2.1 CLOSURE PERFORMANCE STANDARD	3
2.2 NOTIFICATION	3
2.3 MAXIMUM WASTE INVENTORY	4
2.4 INVENTORY RECLAMATION	4
2.5 RECLAMATION SYSTEM DECONTAMINATION	5
2.6 PARTIAL CLOSURE	9
2.7 CERTIFICATION OF CLOSURE	9
3.0 CLOSURE COST ESTIMATE	9
3.1 PLANNED CLOSURE - COST ESTIMATE	10
3.2 UNPLANNED CLOSURE - COST ESTIMATE	11
4.0 CLOSURE SCHEDULE	12

LIST OF TABLES

TABLE NO.	TITLE	PAGE NO.
I	CLOSURE COST ESTIMATE - PLANNED CLOSURE	13
II	CLOSURE COST ESTIMATE - UNPLANNED CLOSURE	15
III	CLOSURE SCHEDULE - PLANNED CLOSURE	17
IV	CLOSURE SCHEDULE - UNPLANNED CLOSURE	18

CLOSURE PLAN

PRIDE SOLVENTS & CHEMICAL CO., INC.

JANUARY 1988

1.0 GENERAL INFORMATION

1.1 SCOPE

This closure plan outlines the procedures to be taken by Pride Solvents & Chemical Co., Inc. during the closure of its waste solvent reclamation facility located at 78 Lamar Street, West Babylon, New York. The intent of the closure plan is to eliminate further maintenance and post-closure escape of hazardous waste to the environment.

The closure plan has been prepared in conformance with 6 NYCRR Part 373-2, Final Status Standards for Owners and Operators of Hazardous Waste Treatment, Storage and Disposal Facilities, Section 373-2.8, Closure and Post-Closure.

1.2 PROCESS OPERATIONS

Pride Solvents reclamation facility at 78 Lamar Street is designed to receive, store and reclaim waste chlorinated and fluorocarbon solvents. All waste solvents are received in 55-gallon drums (no bulk deliveries are accepted) and stored temporarily within a drum storage containment area to await reclamation.

The reclamation process involves filtering, settling, distillation and drying. Several process tanks are used in the operation, namely, a settling tank (650 gallons), the still (475 gallons) and three (3) reclaimed product (distillate) storage tanks (2,000, 500 and 275 gallons). As with the drum storage area, secondary containment is provided for in the solvent reclamation area.

At any given time during the facility's operation, the maxium waste inventory will include 360 drums (19,800 gallons) and 3,900 gallons in the tanks.

2.0 CLOSURE

In general, the closure of Pride Solvents reclamation facility will involve the processing of all waste solvents in storage at the time of closure, the removal and disposition of any sludges and residues, and the cleaning and disposition of process equipment, tanks and drums.

The first step towards closure will be Pride Solvents notifying all clients that they will no longer accept waste solvents for reclamation. This shall be done at the earliest opportunity to allow active generators to arrange for an alternate reclamation site. Once Pride Solvents no longer receives incoming material, all waste solvents stored on-site will be reclaimed.

After reclaiming the waste solvents in storage, all screenings, sludges and residues will be removed from the process equipment and disposed of in the normal manner, via a licensed TSD facility. All process equipment (i.e., tanks, pumps, piping,

distillation unit and dryer) will be decontaminated of any waste residues. Any waste products generated as a result of the cleaning will also be disposed of at a licensed TSD facility.

Once clean, the process equipment will be sold as either scrap or used equipment depending on condition. All empty 55-gallon drums will be sold for reconditioning and resale by a drum reconditioner.

2.1 CLOSURE PERFORMANCE STANDARD

This closure plan is designed to ensure that Pride Solvents' waste storage and reclamation facility will require no further maintenance and controls following closure of its hazardous waste activities. The plan is intended to eliminate threats to human health and the environment. To ensure adequate closure, all wastes, process equipment and structures will be decontaminated and/or disposed of off-site. Following decontamination, soil and water samples will be collected and analyzed for halogenated organics to ensure that no contamination exists. If soil or water contamination is found to exist, appropriate remedial actions will be taken.

2.2 NOTIFICATION

Pride Solvents shall notify the NYSDEC of its intent to close its hazardous waste storage and reclamation activities 180 days prior to actual closure. Pride Solvents will also notify its clients at this time to allow generators to arrange alternative waste management procedures.

In notifying the regulatory agencies of its intent to close its hazardous waste management facility, Pride Solvents will provide the NYSDEC with a copy of this closure plan. The closure plan should include an updated closure cost estimate.

2.3 MAXIMUM WASTE INVENTORY

Pride Solvents' drum storage facility is designed to hold a maximum of 360 drums (19,800 gallons). For the purpose of this closure plan, it is assumed that the settling tank (650 gallons), still (475 gallons) and distillate storage tanks (2,000, 500 and 275 gallons) will be full to capacity. The maximum waste inventory is 19,800 gallons in drums and 3,900 gallons in tanks.

2.4 INVENTORY RECLAMATION

After Pride Solvents has stopped accepting waste solvent deliveries, the waste inventory will be reclaimed via Pride Solvents' distillation system. As previously mentioned, the maximum waste inventory will be 360 drums (19,800 gallons), plus 3,900 gallons in the reclamation system. Pride Solvents will process the inventoried waste as follows:

1. Reclaim all waste 1,1,1-trichloroethane.
2. Remove 1,1,1-trichloroethane sludges from distillation unit.
3. Reclaim all waste trichloroethylene.
4. Remove trichloroethylene sludges from distillation unit.

5. Reclaim all waste tetrachloroethylene.
6. Remove tetrachloroethylene sludges from distillation unit.
7. Reclaim all waste methylene chloride.
8. Remove methylene chloride sludges from the distillation unit.
9. Reclaim all waste freon solvents.
10. Remove freon solvent sludges from the distillation unit.

All sludges from the distillation unit shall be placed in secure 55-gallon drum containers. The drums shall be placed on wooden pallets within the drum storage area to await off-site disposal at a licensed TSD facility. A maximum of 20 drums of sludge will be generated during the reclamation of the inventoried waste solvents.

Empty 55-gallon drum containers would be sold for reconditioning and resale by a drum reconditioner. Although Pride Solvents currently receives $5.00 per drum from drum reconditioners, for the purpose of this plan, the empty drums were assumed to have no resale value.

All reclaimed solvents will be removed from the three distillate storage tanks and placed in 55-gallon drum containers for resale through Pride Solvents' distribution facility.

2.5 RECLAMATION SYSTEM DECONTAMINATION

After reclaiming all inventoried waste solvents, the reclamation system will be decontaminated. It is assumed that all

reclamation process equipment will contain residual amounts of waste solvent. Process equipment requiring decontamination include:

- settling tank
- distillation unit
- drying column system
- distillate storage tanks 1, 2 and 3
- pumps and piping

Decontamination of the process equipment during the planned closure will be performed by qualified Pride Solvents personnel. However, during the unplanned closure, the cost estimate for decontamination will be based upon the use of third party labor. Personnel will be equipped with solvent resistant coveralls, head protection, gloves, boots and face respirators.

The reclamation process equipment will be decontaminated as follows:

1. All screenings and residues from the settling tank will be removed and placed in a secure 55-gallon drum container.
2. Resins from the ion exchange drying column system will be removed and placed in secure 55-gallon drum containers.
3. All pumps, piping and valves will be disconnected and dismantled. Residues will be removed from the pumps, piping and valves by steam cleaning.

4. The settling tank, distillation unit, drying columns and distillation holding tanks will be decontaminated by steam cleaning. To assess whether the decontamination has been successful, a portable gas chromatograph shall be used to measure solvent concentrations in the air inside each tank. The presence of more than 25 ppm of any solvent will result in rewashing the tank.

5. Contaminated wash waters generated during the decontamination of the reclamation process equipment will be collected in secure 55-gallon drum containers. An estimated 8 drums of contaminated wash water will be generated. This estimate is based upon wash water requirements of approximately 10 percent of the tank volumes.

6. All 55-gallon drums containing sludges from the distillation unit, screenings and residues from the settling tank, resins from the drying columns and contaminated wash waters from process equipment decontamination shall be shipped off-site to a licensed TSD facility.

7. After removing all drummed materials from the drum storage area, the floors, berms and ramp-ways which make up the spill containment system in the drum storage and reclamation areas shall

be decontaminated by steam cleaning. All resulting wash waters will be collected in secure 55-gallon drum containers. An estimated 13 drums of contaminated wash water will be generated. This estimate is based upon a steam cleaner that operates for 4 hours and uses water at a rate of 3 gallons per minute. To assess whether the decontamination of the drum storage and reclamation areas is complete, samples of the final wash waters shall be collected and analyzed for volatile halogenated organics. Decontamination by steam cleaning shall be repeated if the concentration of any individual contaminant (i.e. 1,1,1-trichloroethane, trichloroethylene, tetrachloroethylene, methylene chloride, trichlorotrifluoroethane) exceeds 1.0 mg/l or combination of contaminants exceeds 2.0 mg/l.

8. After all process equipment and containment systems have been decontaminated, 55-gallon drums containing contaminated wash waters will be shipped off-site for disposal at a licensed TSD facility.

9. Decontaminated process equipment shall be sold as scrap or as used equipment, depending upon its condition.

Due to the secondary spill containment system at Pride Solvents, soils beneath the facility are not expected to be contaminated by the waste storage and reclamation activities. However, soil samples will be collected and analyzed at the time of closure to ensure that the soil is uncontaminated.

2.6 PARTIAL CLOSURE

Partial closure of Pride Solvents waste solvent storage and reclamation systems is not anticipated. If a partial closure of one or more of the reclamation system's process tanks becomes necessary, the tanks would be decontaminated in accordance with the procedures set forth in Section 2.5 of this plan.

2.7 CERTIFICATION OF CLOSURE

Upon completion of the facility closure, Pride Solvents and an independent registered professional engineer will submit to the NYSDEC, certification documenting that the facility was closed in conformance with this closure plan.

3.0 CLOSURE COST ESTIMATE

Two closure cost estimates have been prepared for Pride Solvents' waste storage and reclamation facility. The first cost estimate assumes that the maximum waste inventory would be reclaimed at the time of closure. The second cost estimate assumes that the reclamation process is inoperable and the maximum waste inventory must be disposed of off-site.

Each closure cost estimate has been divided into several categories dealing with waste inventory reclamation/disposal, equipment and containment system decontamination, waste disposal, sampling and analyses, and closure certification. Both cost estimates include an administration cost of 15 percent and contingencies of 25 percent.

3.1 PLANNED CLOSURE - COST ESTIMATE

Table I, Closure Cost Estimate - Planned Closure, presents the itemized costs to perform the facility closure in accordance with the provisions of Sections 2.4 and 2.5 of this plan. It is assumed that the maximum waste inventory will be reclaimed by Pride Solvents at the time of closure. As shown in Table I, Pride Solvents' labor and utility costs to reclaim the waste solvents is $6,700.00.

Costs to decontaminate the reclamation equipment and containment systems are estimated at $2,655.00 and $1,870.00, respectively. This includes plant personnel labor and supervision, and rental costs for steam cleaning equipment.

Waste disposal costs include disposal of solvent sludges, wash waters, screenings, resins and residues. Wastes would be disposed of via General Chemical Co. at $120.00 per drum, including transportation.

An allowance of $1,650.00 was included to cover the cost of air sampling and to collect and analyze wash water and soil samples for contamination. Closure certification by a professional

engineer was estimated at 40 hours over the course of closure at $75.00 per hour.

As indicated in Table I, the total estimated closure cost, including administration and contingencies, is $30,855.00. This cost would be more than offset by the income realized by the resale of the reclaimed waste solvent inventory. Income from this sale of reclaimed solvent is estimated between $70,000.00 and $85,000.00.

3.2 UNPLANNED CLOSURE - COST ESTIMATE

Table II, Closure Cost Estimate - Unplanned Closure, presents the itemized costs to perform an unplanned facility closure. The principal assumption for an unplanned closure is that the reclamation system would be inoperative or otherwise unable to reclaim the waste solvents. The waste inventory would therefore require disposal at an off-site TSD facility.

Waste inventory disposal costs are estimated at $33,030.00. This includes a disposal cost of $80.00 per drum at General Chemical Co., including transportation. Disposal of bulk wastes from the process tanks are estimated at $1.00 per gallon, including transportation.

Equipment and containment area decontamination costs are estimated at $3,870.00 and $2,750.00, respectively. Waste disposal costs for wastes generated during closure are slightly less than under a planned closure due to the absence of additional sludges generated during solvent reclamation. As shown in Table II, waste disposal costs were estimated at

$4,043.00. This includes a disposal cost of $120.00 per drum, including transportation.

Costs for sampling and analyses, and closure certification remain the same as under a planned closure. The total cost for an unplanned closure, including administration and contingencies was estimated at $67,678.00.

4.0 CLOSURE SCHEDULE

Two schedules for closing Pride Solvents' facility are presented in Tables III and IV, Closure Schedule - Planned and Unplanned Closure. The Planned Closure Schedule provides for notifying the generators and NYSDEC 180 days prior to closure. Both plans call for the completion of closure activities within 180 days of accepting the last shipment of spent solvents.

TABLE I

CLOSURE COST ESTIMATE

PLANNED CLOSURE

I. WASTE INVENTORY RECLAMATION	
1) Labor (280 man hrs. @ $15/hr)	$ 4,200.
2) Supervision (40 man hrs. @ $25/hr)	1,000.
3) Utilities	1,500.
Sub-Total	$ 6,700.
II. EQUIPMENT DECONTAMINATION	
1) Labor (72 man hrs. @ $15/hr)	$ 1,080.
2) Supervision (18 man hrs. @ $25/hr)	450.
3) Steam Cleaner Rental (3 days @ $375/day)	1,125.
Sub-Total	$ 2,655.
III. CONTAINMENT DECONTAMINATION	
1) Labor (48 man hrs. @ $15/hr)	$ 720.
2) Supervision (16 man hrs. @ $25/hr)	400.
3) Steam Cleaner Rental (2 days @ $375/day)	750.
Sub-Total	$ 1,870.
IV. WASTE DISPOSAL	
1) Solvent Sludges (20 drums @ $120/drum)	$ 2,400.
2) Screenings, Residues & Resins (10 drums @ $120/drum)	1,200.
3) Wash Waters (21 drums @ $120/drum)	2,520.
4) Labor (3 man hrs. @ $15/hr)	45.
Sub-Total	$ 6,165.
V. SAMPLING AND ANALYSES	
1) Soil and Wash Water Sample Collection	$ 400.
2) Soil Analyses	800.
3) Air Sampling (Portable GC)	200.
4) Wash Water Analyses	250.
Sub-Total	$ 1,650.

TABLE I (CONT'D.)

VI. CLOSURE CERTIFICATION	
1) Engineer (40 man hrs. @ $75/hr)	$ 3,000.
VII. SUB-TOTAL	$22,040.
1) Administration 15%	3,305.
2) Contingencies 25%	5,510.
VIII. TOTAL ESTIMATED CLOSURE COST	$30,855.

TABLE II

CLOSURE COST ESTIMATE

UNPLANNED CLOSURE

I. WASTE INVENTORY DISPOSAL	
1) Waste Solvent (360 drums @ $80/drum)	$28,800.
2) Waste Solvent (3,900 gals. @ $1.00/gal.)	3,900.
3) Labor (12 man hrs. @ $27.50/hr.)	330.
Sub-Total	$33,030.
II. EQUIPMENT DECONTAMINATION	
1) Labor (72 man hrs. @ $27.50/hr.)	$ 1,980.
2) Supervision (18 man hrs. @ $42.50/hr.)	765.
3) Steam Cleaner Rental (3 days @ $375/day)	1,125.
Sub-Total	$ 3,870.
III. CONTAINMENT DECONTAMINATION	
1) Labor (48 man hrs. @ $27.50/hr.)	$ 1,320.
2) Supervision (16 man hrs. @ $42.50/hr.)	680.
3) Steam Cleaner Rental (2 days @ $375/day)	750.
Sub-Total	$ 2,750.
IV. WASTE DISPOSAL	
1) Screening, Residues, Sludges and Resins (12 drums @ $120/drum)	$ 1,440.
2) Wash Waters (21 drums @ $120/drum)	2,520.
3) Labor (3 hrs. @ $27.50/hr.)	83.
Sub-Total	$ 4,043.
V. SAMPLING AND ANALYSES	
1) Soil and Wash Water Sample Collection	$ 400.
2) Soil Analyses	800.
3) Air Sampling (Portable GC)	200.
4) Wash Water Analyses	250.
Sub-Total	$ 1,650.

TABLE II (CONT'D.)

VI. CLOSURE CERTIFICATION	
1) Engineer (40 hrs. @ $75/hr)	$ 3,000.
VII. SUB-TOTAL	$48,343.
1) Administration 15%	7,250.
2) Contingencies 25%	12,085.
VIII. TOTAL ESTIMATED CLOSURE COST	$67,678.

TABLE III

CLOSURE SCHEDULE

PLANNED CLOSURE

1) Notify NYSDEC and Customers/ Generators of Pending Facility Closure	180 days prior to facility closure
2) Submit Closure Plan to NYSDEC	180 days prior to facility closure
3) Receive Final Volume of Waste	180 days following notification
4) Reclaim Waste Solvent Inventory	Concurrent with Item 3
5) Inspection/Certification	Upon completion of waste solvent inventory reclamation
6) Decontaminate Reclamation Equipment	Upon completion of Item 5
7) Inspection/Certification	Upon completion of reclamation equipment decontamination
8) Dispose of Sludges, Screenings, Residues, Resins, Wash Waters and Empty Drums	Upon completion of Item 7 and within 90 days of Item 3
9) Decontaminate Containment Structures	Upon completion of Item 8
10) Collect and Analyze Soil Samples	Concurrent with Item 9
11) Dispose of Final Wash Wastes	Upon completion of Item 9
12) Final Inspection/Certification	Upon completion of Items 10 and 11 and within 180 days of Item 3

TABLE IV

CLOSURE SCHEDULE

UNPLANNED CLOSURE

1) Receive Final Volume of Waste Solvents	
2) Dispose of Waste Solvent Inventory	Within 90 days of Item 1
3) Inspection/Certification	Upon completion of waste inventory disposal
4) Decontaminate Reclamation Equipment and Containment Structures	Upon completion of Item 3
5) Inspection/Certification	Upon completion of decontamination work
6) Dispose of Sludges, Screenings, Resins, Residues and Wash Waters	Upon completion of Item 5
7) Collect and Analyze Soil Samples	Concurrent with Item 6
8) Final Inspection/Certification	Upon completion of Items 6 & 7 and within 180 days of Item 1

J. FINANCIAL REQUIREMENTS

J. FINANCIAL REQUIREMENTS

This section describes Pride Solvents' conformance with 6 NYCRR 373-2.8, Financial Requirements. The information presented in this section is submitted in accordance with 6 NYCRR 373-1.5 (a)(2)(xv).

J-1. FINANCIAL ASSURANCE OF CLOSURE

Pride Solvents has established a trust fund with Pittsburgh National Bank as the mechanism for financial assurance of closure. A copy of the trust fund agreement is provided in Appendix .

J-2. LIABILITY INSURANCE

Pride Solvents has obtained liability insurance against sudden accidental occurrences in the amount of One Million Dollars ($1,000,000.) per occurrence and Two Million Dollars ($2,000,000.) aggregate. A copy of the liability insurance certificate is provided in Appendix .

Because Pride Solvents' hazardous waste activities do not involve landfill, surface impoundment or land treatment, no liability insurance for non-sudden accidental occurrences is required.

APPENDIX J

TRUST FUND AGREEMENT

PITTSBURGH NATIONAL BANK

An affiliate of PNC FINANCIAL CORP

Trust Division

Pittsburgh, PA 15265

October 14, 1986

Mr. Arthur Dhom
President
Pride Solvents & Chemical Company
88 Lamar Street
West Babylon, New York 11704

In re: Trust Agreement between Pride Solvents & Chemical Co., Inc & Pittsburgh National Bank dated March 20, 1986
Trust #142103-5

Dear Mr. Dhom:

In accordance with your telephone request, we enclose herewith a copy of the subject Trust Agreement.

Very truly yours,

F. J. Deramo
Vice President

mh
Enclosure

TRUST AGREEMENT, the "Agreement", entered into as of March 20th, 1986, by and between PRIDE SOLVENTS & CHEMICAL CO., INC., a domestic corporation having its principal office located at 88 Lamar Street, West Babylon, New York 11704, the "Settlor", and PITTSBURGH NATIONAL BANK, a national bank, having its office located in Pittsburgh, Pennsylvania 15265, the "Trustee".

WHEREAS, the New York State Department of Environmental Conservation (hereinafter referred to as "NYSDEC") has established certain regulations applicable to the Settlor, requiring that an owner or operator of a hazardous waste management facility shall provide financial assurance that funds will be available when needed for the facility closure (hereinafter referred to as "Closure) and

WHEREAS, the Settlor has elected to establish a trust to provide all or part of such financial assurance for the facilities identified herein, and

WHEREAS, the Settlor acting through its duly authorized officers, has selected the Trustee to be the trustee under this Agreement, and the Trustee is willing to act as trustee,

NOW, THEREFORE, the Settlor and the Trustee agree as follows:

Section 1. Definitions, As used in this Agreement:

(a) The term "Settlor" means the owner or operator who enters into this Agreement and any successors or assigns of the Settlor.

(b) The term "Trustee" means the Trustee who enters into this Agreement and any successor Trustee.

(c) The term "Commissioner" means the Commissioner of the New York State Department of Environmental Conservation, or his duly appointed designee.

Section 2. Identification of Facilities and Cost Estimates. This Agreement pertains to the facilities and cost estimates identified on attached Schedule A.

Section 3. Establishment Fund. The Settlor and the Trustee hereby establish a trust fund (hereinafter referred to as the "Fund") for the benefit of NYSDEC. The Settlor and the Trustee intend that no third party have access to the Fund except as herein provided. The Fund is established initially as consisting of the

property, which is acceptable to the Trustee, described in Schedule B annexed hereto. Such property and any other property subsequently transferred to the Trustee is referred to as the Fund, together with all earnings and profits thereon, less any payments or distributions made by the Trustee pursuant to this Agreement. The Fund shall be held by the Trustee, IN TRUST, as hereinafter provided. The Trustee shall not be responsible, nor shall it undertake any responsibility for the amount or adequacy of, nor any duty to collect from the Settlor, any payments necessary to discharge any liabilities of the Settlor established by NYSDEC.

Section 4. Payment for Closure, Postclosure. The Trustee shall make payment from the Fund as the Commissioner shall direct, in writing, to provide for the payment of the costs of Closure and Postclosure of the facilities covered by this Agreement. The Trustee shall reimburse the Settlor or other person as specified by the Commissioner from the Fund for the expenditures of such covered activities in such amounts as the Commissioner shall direct in writing. In addition, the Trustee shall refund to the Settlors such amounts as the Commissioner specifies in writing. Upon refund, such funds shall no longer constitute part of the Funds as defined herein.

Section 5. Payments Comprising the Fund. Payments made to the Trustee for the Fund shall consist of cash or securities acceptable to the Trustee.

Section 6. Trustee Management. The Trustee shall invest and reinvest the principal and income of the Fund and keep the Fund invested as a single fund, without distinction between principal and income, in accordance with general investment policies and guidelines which the Settlor may communicate in writing to the Trustee from time to time, subject, however, to the provisions of this Section. In investing, reinvesting, exchanging, selling, and managing the Fund, the Trustee shall discharge his duties with respect to the trust fund solely in the interest of the beneficiary and with the care, skill, prudence, and diligence under the circumstances then prevailing which persons of prudence, acting in a like capacity and familiar with such matters, would use in the conduct of an enterprise of a like character and with like aims; except that:

(i) Securities or other obligations of the Settlor, or any other owner or operator of the facilities, or any of their affiliates as defined in the Investment Company Act of 1940, 15 USCA 80a-2.(a) (see subdivision 370.1(e)), shall not be acquired or held, unless they are securities or other obligations of the Federal or a State government;

(ii) The Trustee is authorized to invest the Fund in time or demand deposits of the Trustee, to the extent insured by an agency of the Federal or State government; and

(iii) The Trustee is authorized to hold cash awaiting investment or distribution uninvested for a reasonable time and without liability for the payment of interest thereon.

Section 7. Commingling and Investment. The Trustee is expressly authorized in its discretion:

(a) To transfer from time to time any or all of the assets of the Fund to any common, commingled, or collective trust fund created by the Trustee in which the Fund is eligible to participate, subject to all of the provisions thereof, to be commingled with the assets of other trusts participating therein; and

(b) To purchase shares in any investment company registered under the Investment Company Act of 1940, 15 USCA 80a-1 et seq. (see 6NYCRR subdivision 370.1(e)), including one which may be created, managed, underwritten, or to which investment advice is rendered or the shares of which are sold by the Trustee. The Trustee may vote such shares in its discretion.

Section 8. Express Powers of Trustees. Without in any way limiting the powers and discretions conferred upon the Trustee by the other provisions of this Agreement or by law, the Trustee is expressly authorized and empowered:

(a) To sell, exchange, convey, transfer, or otherwise dispose of any property held by it, by public or private sale. No person dealing with the Trustee shall be bound to see to the application of the purchase money or to inquire into the validity or expediency of any such sale or other disposition;

(b) To make, execute, acknowledge, and deliver any and all documents of transfer and conveyance and any and all other instruments that may be necessary or appropriate to carry out the powers herein granted;

(c) To register any securities held in the Fund in its own name or in the name of a nominee and to hold any security in bearer from or in book entry, or to combine certificates representing such securities with certificates of the same issue held by the trustee in other fiduciary capacities, or to deposit or arrange for the deposit of such securities in a qualified central depository even though, when so deposited, such securities may be merged and held in bulk in the name of the nominee of such depository with other securities deposited therein by another

person, or to deposit or arrange for the deposit of any securities issued by the United States Government, or any agency or instrumentality thereof, with a Federal Reserve bank, but the books and records of the Trustee shall at all times show that all such securities are part of the Fund;

(d) To deposit any cash in the Fund in interest-bearing accounts maintained or savings certificates issued by the Trustee, in its separate corporate capacity, or in any other banking institution affiliated with the Trustee, to the extent insured by an agency of the Federal or State government; and

(e) To accept additions to the Fund from sources other than the Settlor of the Trust.

(f) To contest, compromise, or otherwise settle any claim in favor of the Fund or Trustee, or in favor of third persons and against the Fund or Trustee.

Section 9. Taxes and Expenses. All taxes of any kind that may be assessed or levied against or in respect of the Fund and all brokerage commissions incurred by the fund shall be paid from the Fund. All other expenses incurred by the Trustee in connection with the administration of this Trust, including fees for legal services rendered to the Trustee, the compensation of the Trustee to the extent not paid directly by the Settlor, and all other proper charges and disbursements of the Trustee shall be paid from the Fund.

Section 10. Annual Valuation. The Trustee shall annually, at least 30 days prior to the anniversary date of establishment of the fund, furnish to the Settlor and to the Commissioner, a statement confirming the value of the Trust. Any securities in the Fund shall be valued at market value as of no more than 60 days prior to the anniversary date of the establishment of the Fund. The failure of the Settlor to object in writing to the Trustee within 90 days after the statement has been furnished to the Settlor and to the Commissioner shall constitute a conclusively binding assent by the Settlor, barring the Settlor from asserting any claim or liability against the Trustee with respect to matters disclosed in the statement.

Section 11. Advice of Counsel. The Trustee may from time to time consult with counsel, who may be counsel to the Settlor, with respect to any question arising as to the construction of this Agreement or any action to be taken hereunder. The Trustee shall be fully protected, to the extent permitted by law, in acting upon the advice of counsel.

Section 12. Trustee Compensation. The Trustee shall be entitled to reasonable compensation for its service as agreed upon in writing from time to time with the Settlor.

Section 13. Successor Trustee. The Trustee may resign or the Settlor may replace the Trustee, but such resignation or replacement shall not be effective until the Settlor has appointed a successor Trustee and this successor accepts the appointment. The successor trustee shall have the same powers and duties as those conferred upon the Trustee hereunder. Upon the successor trustee's acceptance of the appointment, the Trustee shall assign, transfer, and pay over to the successor trustee the funds and properties then constituting the Fund. If for any reason the Settlor cannot or does not act in the event of the resignation of the Trustee, the Trustee may apply to a court of competent jurisdiction for the appointment of a successor trustee or for instruction. The successor trustee shall specify the date on which it assumes administration of the trust in a writing sent to the Settlor, the Commissioner, and the present Trustee by certified mail, return receipt requested, 10 days before such change becomes effective. Any expenses incurred by the Trustee as a result of any of the acts contemplated by this Section shall be paid as provided in Section 9.

Section 14. Instructions to the Trustee. All orders, requests, and instructions by the Settlor to the Trustee shall be given in writing, signed by such persons as are designated in the attached Exhibit A or such other designees as the Settlor may designate by amendment to Exhibit A. The Trustee shall be fully protected in acting without inquiry in accordance with the Settlor's orders, requests, and instructions. All orders, requests, and instructions by the Commissioner to the Trustee shall be in writing, signed by the Commissioner, and the Trustee shall act and shall be fully protected in acting in accordance with such orders, requests, and instructions. The Trustee shall have the right to assume, in the absence of written notice to the contrary, that no event constituting a change or a termination of the authority of any person to act on behalf of the Settlor or NYSDEC hereunder has occurred. The Trustee shall have no duty to act in the absence of such orders, requests, and instructions from the Settlor and/or NYSDEC except as provided for herein.

Section 15. Notice of Nonpayment. The Trustee shall notify the Settlor and the Commissioner, by certified mail, return receipt requested, within 10 days following the expiration of the 30-day period after the anniversary of the establishment of the Trust, if no payment is received from the Settlor during that period. After the pay-in period is completed, the Trustee shall not be required to send a notice of nonpayment.

Section 16. Amendment of Agreement. This Agreement may be amended by an instrument in writing executed by the Settlor, the Trustee, and the Commissioner or by the Trustee and the Commissioner if the Settlor ceases to exist.

Section 17. Irrevocability and Termination. Subject to the right of the parties to amend this Agreement as provided in Section 16, this Trust shall be irrevocable and shall continue until terminated at the written agreement of the Settlor, the Trustee, and the Commissioner, or by the Trustee and the Commissioner, if the Settlor ceases to exist. Upon termination of the Trust, all remaining trust property, less final trust administration expenses, shall be delivered to the Settlor.

Section 18. Immunity and Idemnification. The Trustee shall not incur personal liability of any nature in connection with any act or omission, made in good faith, in the administration of this Trust, or in the carrying out of any directions by the Settlor or the Commissioner issued in accordance with this Agreement. The Trustee shall be indemnified and saved harmless by the Settlor or from the Trust Fund, or both, from and against any personal liability to which the Trustee may be subjected by reason of any act or conduct in its official capacity, including all expenses reasonably incurred in its defense in the event the Settlor fails to provide such defense.

Section 19. Choice of Law. This Agreement shall be administered, construed, and enforced according to the laws of the State of New York.

Section 20. Interpretation. As used in this Agreement, words in the singular include the plural and words in the plural include the singular. The descriptive headings for each Section of this Agreement shall not affect the interpretation or the legal efficacy of this Agreement.

IN WITNESS WHEREOF, the parties have caused this Agreement to be executed by their respective officers duly authorized and their corporate seals to be hereunto affixed and attested as of the date first above written. The parties below certify that the wording of this Agreement is identical to the wording specified in 6 NYCRR 370

et seq. as such regulations were constituted on the date first above written.

PRIDE SOLVENTS & CHEMICAL CO., INC.

By: _____
ARTHUR DHOM - President

PITTSBURGH NATIONAL BANK

By: _____
F. J. DERAMO
VICE PRESIDENT

STATE OF NEW YORK)
)ss.:
COUNTY OF SUFFOLK)

On this day of March, 1986, before me personally came ARTHUR DHOM, to me known, who, being by me duly sworn, did depose and say that he resides at 10 Serene Court, Dix Hills, New York; that he is the President of PRIDE SOLVENTS & CHEMICAL CO., INC., the corporation described in and which executed the within Trust Agreement; that he knew the seal of said corporation; that the seal affixed to said instrument was such corporate seal; that it was so affixed by order of the board of directors of said corporation, and that he signed his name thereto by like order.

_____
Notary Public
ROBERT GADUE
NOTARY PUBLIC, State of New York
No. 52-1354510
Qualified in Suffolk County
Commission Expires March 30, 1987

STATE OF Pennsylvania)
)ss.:
COUNTY OF Allegheny)

On this 21st day of March, 1986, before me personally came F. J. DeRamo, to me personally known, who, by me duly sworn, did depose and say that (s)he resides in Sewickley, Pa; that (s)he is the Vice President of PITTSBURGH NATIONAL BANK, the banking institution described in and which executed the within Trust Fund Agreement; and that (s)he signed his/her name thereto by authority of such banking institution.

_____
Notary Public
RENEE L. SCHWEPER, NOTARY PUBLIC
PITTSBURGH, ALLEGHENY COUNTY
MY COMMISSION EXPIRES JUNE 19, 1989
Member, Pennsylvania Association of Notaries

ECS
Underwriting,
Inc.

520 Eagleview Boulevard
PO Box 636
Exton, PA 19341-0636
(215) 458-0570
(800) ECS-1414
outside Pennsylvania
Fax (215) 458-8667

CERTIFIED MAIL

RETURN RECEIPT REQUESTED

December 29, 1993

Ms. Margaret O'Neil
Dept of Environmental Conservation
Bureau of Pollution Prevention
Division of Hazardous Waste Substances
50 Wolf Road
Albany, NY 12233-7253

RE: PRIDE SOLVENTS
POLICY #NTA1634004

Dear Ms. O'Neil:

Enclosed please find the Hazardous Waste Facility Certificate of Liability Insurance for the above-reference account as required by New York State Law.

If you have any questions, please do not hesitate to contact me.

Sincerely,

Larissa Solowjow
Technical Assistant
Pollution Liability Department

/ls

Enclosure

cc: Scott Britt

RECEIVED
JAN 03 1994
HW COMPLIANCE UNIT
DIVISION OF HAZARDOUS
SUBSTANCES REGULATION

HAZARDOUS WASTE FACILITY CERTIFICATE OF LIABILITY INSURANCE

1. Planet Insurance Company, (the "Insurer"), of 4 Penn Center Plaza, Philadelphia, PA 19103 hereby certifies that it has issued a policy of liability insurance (the "Policy") covering bodily injury and property damage to Pride Solvents & Chemical Company, Incorporated (the "Insured"), of 78-88 Lamar Street, West Babylon, NY 11704 in connection with the Insured's obligation to demonstrate financial responsibility under 6 NYCRR Part 370 et seq. The coverage applies at 78-88 Lamar Street, West Babylon, NY 11704 EPA# NYD057722258 for "sudden and nonsudden accidental occurrences". The limits of liability are $1,000,000 each occurrence and $2,000,000 annual aggregate, exclusive of legal defense costs. The coverage is provided under Policy number NTA1634004 issued on December 1, 1993.

2. The Insurer further certifies the following with respect to the insurance described in Paragraph 1:

(a) Bankruptcy or insolvency of the insured shall not relieve the Insurer of its obligations under the policy.

(b) The Insurer is liable for the payment of amounts within any deductible applicable to the policy, with the right of reimbursement from the Insured for any payment made by the insurer. This provision does not apply with respect to the amount of any deductible for which coverage is demonstrated by virtue of the Insured's satisfying the financial test for liability coverage as established by the New York State Department of Environmental Conservation (hereinafter "NYSDEC") or by the Commissioner of NYSDEC (hereinafter referred to as the "Commissioner") and as specified in 6 NYCRR Part 370 et seq.

(c) Whenever requested by the Commissioner, the Insurer agrees to furnish to the Commissioner a signed duplicate original of the policy and all endorsements.

(d) Cancellation of the insurance, whether by the Insurer, the Insured, a parent corporation providing insurance coverage for its subsidiary, or by a firm having an insurable interest in and obtaining liability insurance on behalf of the owner or operator of the Hazardous Waste Management Facility, will be effective only upon written notice, certified mail, return receipt requested, and only after the expiration of sixty (60) days after a copy of such written notice is received by the Commissioner.

(e) Any other termination of the insurance will be effective only upon written notice, certified mail, return receipt requested, and only after the expiration of thirty (30) days after a copy of such written notice is received by the Commissioner.

I hereby certify that the wording of this instrument is identical to the wording specified in 6 NYCRR Part 370 373-2.8(J)(8) as such regulation was constituted on the date first above written, and that the insurer is authorized by the Superintendent of the New York State Department of Insurance to conduct the business of an insurer or is eligible to provide insurance as an excess or surplus lines insurer in the State of New York.

(Signature of Authorized Representative of Insurer)

Paul M. Murdoch, Assistant Vice President
Authorized Representative of Planet Insurance Company

c/o Environmental Compliance Services, Inc.
520 Eagleview Boulevard
P.O. Box 636
Exton, PA 19341-0636

Attachment VI

D-2. CONTAINERS

D-2a. CONDITION OF CONTAINERS

All spent solvents awaiting reclamation by Pride Solvents are received and stored in 55-gallon drums. The drums must be in a condition acceptable for DOT common carrier transport. That is, all drums must conform to DOT Class 17E containers, as per CFR Title 49, Part 178, Subpart 116. Once inside Pride Solvents' facility, the drums are inspected daily for leaks, spills and deterioration. If a drum is found to be leaking, the contents will immediately be transferred to another drum. Pride Solvents' secondary spill containment measures provide additional protection from leaking drums.

CONTAINER STORAGE AREA

Waste type and storage capacity:

AREA	WASTE TYPE	CONTAINER VOLUME	TOTAL AMOUNT OF DRUMMED WASTE
Drum Storage Area 2,200 Sq.Feet Indoor Storage	1,1,1-Trichloroethane F001 & F002 Trichloroethylene F001 & F002 Methylene Chloride F001 & F002 Tetrachloroethylene F001 & F002 Freon F001 & F002 Sludge and still bottoms generated by on-site reclamation of solvents F001 & F002	55 Gallons DOT Class 17E	360 Drums 360 X 55 = 19,800 gallons

D-2b. COMPATIBILITY OF WASTES WITH CONTAINERS

Because the spent solvents which Pride Solvents accepts for reclamation (chlorinated fluorocarbons) do not exhibit corrosive characteristics, they are compatible with the steel drums they are stored in and do not require any special inner lining. (Reference: Fire Protection Guide for Hazardous Materials, 7th Edition, NFPA, CFR Title 49, Parts 172, 173 and 178).

D-2c. MANAGEMENT OF CONTAINERS

All drummed spent solvents awaiting reclamation are stored within a bermed area. The drum storage area was constructed in compliance with Article XII of the Suffolk County Sanitary Code. The drums are palletized and stacked two pallets high. Aisle space between the pallets is provided to allow for daily inspections. Drums of spent solvent are always closed when in storage. All drums are stored and handled in a manner which prevents the probability of ruptures or leaks. Pride Solvents inspects stored drums for leaks, spills and deterioration on a daily basis. A drum inventory is taken on a weekly basis. See Sample Inspection Log in Appendix D.

Waste solvents generated off-site are received exclusively in 55-gallon drums. Truck deliveries are received on the north side of the reclamation building (78 Lamar St.) just outside the entrance to the drum storage portion of the building. Drums are unloaded from the trucks using forklifts equipped with drum pickers and placed on wooden 4 foot by 4 foot pallets within the

indoor drum storage area. Once inside the drum storage facility, the drums are moved within the facility either on pallets using forklifts or individually using forklifts equipped with drum pickers. The maximum number of drums to be temporarily stored awaiting reclamation is 360.

D-2d. SPECIAL REQUIREMENTS FOR IGNITABLE OR REACTIVE WASTES

Because none of the spent solvents accepted by Pride Solvents are ignitable or reactive, no special requirements are necessary.

D-2e. SPECIAL REQUIREMENTS FOR INCOMPATIBLE WASTES

Because none of the spent solvents accepted by Pride Solvents are incompatible, no special requirements are necessary.

D-2f. SPILL CONTAINMENT PROVISIONS

All 55-gallon drums containing waste solvents awaiting reclamation are stored indoors. The drum storage area and reclamation area afford a total of approximately 3,800 square feet of floor area. The perimeter of the storage and reclamation areas are surrounded by a 8-inch tall concrete berm. The containment volume afforded by the bermed area is approximately 16,500 gallons (83 percent of the total storage capacity of 360 drums). Concrete rampways provide access to and from the bermed containment area. The floor is constructed of a 4-inch thick concrete slab with 66/1010 WW fabric reinforcement. Reinforcement in the

main entrance rampway consists of 66/66 WW fabric. All floors, berms and rampways are constructed of 3,000 psi concrete.

There are no floor drains within the bermed containment area. All floor joints and/or cracks were sealed using "Preco-Tile" epoxy sealant. All exposed floor, berm and rampway surfaces have received one coat of "Preco-Tile" epoxy sealant and one coat of "Preco Liqui-Steel". Technical data sheets for these two Preco products are provided in Appendix E.

Minor spills within the bermed drum storage area will be removed using absorbent material. Larger spills would be handled using a portable pump. In either case, the waste material resulting from a spill cleanup will be placed in 55-gallon drum containers. If the spill incident involves a single product, the material recovered would be held for reclamation. All other materials recovered from a spill, including contaminated absorbent material, would be disposed of via an off-site TSD facility.

Because the drum storage area is located indoors, provisions to remove storm water are not necessary. No waste materials are stored outdoors.

Attachment VII

D-3 TANKS

Table D-4, Distillation Process Equipment, presents the design capacities of each tank and process unit in the distillation operation. Every tank in the distillation process is equipped with high level sensors with audible alarms, as well as sight gauges for visual inspection to prevent the possibility of overfilling. All process tanks are vented to the outside.

The tank's high level sensors are mechanical float type sensors as manufactured by McDonnell & Miller/ITT. Each level sensor is mounted to sound an alarm when the tank level reaches 85 percent capacity.

D-3a. COMPATIBILITY OF WASTES WITH TANKS

With the exception of the distillation unit and drying columns, which are made of stainless steel, all process tanks are constructed of mild steel. Because the spent solvents accepted for reclamation do not exhibit corrosive characteristics, they are compatible with the steel process tanks.

TABLE D-4

DISTILLATION PROCESS EQUIPMENT

PRIDE SOLVENTS & CHEMICAL CO., INC.

TANK	PROCESS EQUIPMENT	CAPACITY IN GALLONS
A	Settling Tank	650
B	Distillation Unit	75/150 gallons/hr.
C	Drying Column System	150 gallons/hr.
D	Distillate Storage Tank-1	2000
E	Distillate Storage Tank-2	500
F	Distillate Storage Tank-3	275
G	Cooling Water Reservoir	250

D-3b. MANAGEMENT OF TANKS

All of Pride Solvents' process tanks used in the reclamation process are housed indoors within a bermed process area.

Spent solvents are transferred from tank to tank, in batches, using manually controlled pumps. The process tanks are equipped with sight gauges and high level sensors with audible alarms to prevent overfilling. Secondary containment, consistent with the requirements of the Suffolk County Sanitary Code, Article XII, is provided for the entire reclamation area.

Pride Solvents inspects the process tanks and their appurtenances on a routine basis. This includes the tanks, overfill alarms, pumps, piping and containment berms. A more detailed description of Pride Solvents' inspection procedures is presented in Section F-2.

D-3c. MINIMUM SHELL THICKNESS

To ensure the structural integrity of the various tanks in the reclamation area Pride Solvents will maintain a minimum shell thickness in accordance with those specified in Table D-5, Tank Design. The minimum shell thicknesses specified in Table D-5 take into account the specific gravity of the materials to be stored (1.05 to 1.60), tank dimensions, materials of construction and allowable stress. Detailed drawings of each tank are provided in Appendix F.

Pride Solvents shall check the tanks' shell thickness on a monthly basis to ensure that the minimum shell thickness is being maintained. Shell thickness shall be measured using a T-Mike

TABLE D-5

TANK DESIGN

PRIDE SOLVENTS & CHEMICAL CO., INC.

Tank	Capacity (Gallons)	Materials of Construction	Dimensions	Shell Thickness	Min. Shell Thickness
Settling Tank	650	Carbon Steel	73"L x 54"W x 43"H	3/16" (0.1875)	1/8" (0.125)
Distillation Tank	600	304 St. Steel	72"L x 48"W x 100"H (Maximum Operating Depth = 40")	12 G. (0.1072)	14G (0.0766)
Distillate Storage Tank 1	2,000	Carbon Steel	64" Dia. x 144"H	3/16" (0.1875)	1/8" (0.125)
Distillate Storage Tank 2	500	Carbon Steel	48" Dia. x 72"H	3/16" (0.1875)	1/8" (0.125)
Distillate Storage Tank 3	275	Carbon Steel	70"L x 28"W x 43"H	3/16" (0.1875)	1/8" (0.125)

Revised by NYSDEC to delete references to the 3 closed feed tanks

Model 3000 Ultrasonic Tester. Technical information on the ultrasonic tester is provided in Appendix G. Ultrasonic measurements will be taken vertically down the side of each tank at 12-inch intervals. The locations tested will vary each month. Each month between twelve (12) points set at 30 degree intervals around the tank circumference in accordance with the following schedule:

MONTH	TEST LOCATION
1	0°
2	180°
3	90°
4	270°
5	30°
6	210°
7	120°
8	300°
9	60°
10	240°
11	150°
12	330°

Ultrasonic testing of the tank's top and bottom plates will be tested once every six (6) months. Top and bottom plates will be tested at 6-inch intervals along 90 degree grids. All ultrasonic testing data will be recorded in an inspection log and maintained with Pride Solvents' daily and weekly facility inspection logs. A sample inspection log is provided in Appendix D.

In the event that the ultrasonic testing indicates a shell thickness below the minimum thickness specified in Table D-5, Pride Solvents will perform additional testing in the area immediately adjacent to the suspect location. Shell thickness shall be measured at 48 locations within a 9-inch radius of the initial

low shell thickness point. A 360 degree grid will be established with measurements taken at 1.5-inch intervals every 45 degrees.

If the additional testing confirms a shell thickness below the minimum specified, Pride Solvents will take the appropriate corrective action. Depending upon the nature and severity of the problem, corrective actions may involve either the repair or replacement of the tank. Tank repairs will be limited to cold mechanical type seals (threaded plug) in instances of isolated pitting type corrosion. If the tank cannot be repaired utilizing mechanical seals, the tank will be replaced. No welded type patches or repairs will be attempted.

Replacement tanks will be of similar design and capacity as the existing tanks. Pride Solvents will notify NYSDEC prior to replacing an existing tank. In notifying NYSDEC, design plans will be submitted for the proposed replacement tank.

D-3d. SPECIAL REQUIREMENTS FOR IGNITABLE OR REACTIVE WASTES

Because the spent solvents accepted by Pride Solvents are neither ignitable nor reactive, no special requirements are necessary.

D-3e. SPILL CONTAINMENT PROVISIONS

As indicated in Section D-2f, the reclamation operation is housed within an area affording approximately 3,800 square feet. The perimeter of the drum storage and reclamation system is surrounded by a 8-inch tall concrete berm. The spill containment

volume provided by the bermed area is approximately 16,500 gallons.

Concrete rampways provide access to and from the bermed containment area. The concrete floor slab, berms and rampways have all received a protective epoxy coating to ensure that all exposed surfaces are impervious to spills and/or leaks. See Appendix E for details on sealant and epoxy coating.

D. PROCESS INFORMATION

D. PROCESS INFORMATION

This section provides detailed information on Pride Solvents' waste storage and reclamation activities. The information is submitted in accordance with the requirements of 6 NYCRR 373-1.5(b) and (c).

As previously mentioned, Pride Solvents' operations include the reclamation of waste solvents by a distillation process at 78 Lamar Street. The facility has undergone extensive modifications in accordance with construction plans submitted to and approved by the Suffolk County Department of Health Services (SCDHS) to assure overall compliance with Article XII of the Suffolk County Sanitary Code (Toxic and Hazardous Materials Storage and Handling Control). The finished facility was inspected by SCDHS and approved for operation. In accordance with New York State Department of Environmental Conservation regulations, Pride Solvents applied for and was granted a Part 360 Permit to operate a solid waste management facility (Permit No. 52W01).

The Pride Solvents facility is equipped to receive and store waste chlorinated solvents and freons, then reclaim the material by a distillation process. Waste solvents are received exclusively in 55-gallon drums. No bulk shipments are accepted. Waste materials received in 55-gallon drums will be palletized and stored indoors within a bermed epoxy coated containment area. The drum storage area affords approximately 2,200 square feet of available floor space and is designed to accept a maximum of 360 drums for temporary storage.

Revised by NYSDEC to delete references to feed tanks closed by the permittee

Table D-1 Waste Solvent Reclamation, provides details on the type and quantities of waste solvents received for reclamation.

Table D-2, Waste Generation, lists the hazardous wastes generated as a result of Pride Solvents' reclamation activities. Wastes generated as a result of the reclamation activities are placed in 55 gallon drums, stored temporarily in the drum storage area and disposed off-site at a permitted TSD facility.

D-1. SOLVENT RECLAMATION

D-1a. PROCESS DESCRIPTION

A schematic of Pride Solvents' waste reclamation process is presented in Figure III, solvent Reclamation Schematic. Waste 1,1,1-trichloroethane, trichlorethylene, methylene chloride and tetrachloroethylene are pumped from the drums in which they are received to a 650 gallon settling tank. The settling tank is equipped with 40 and 80 mesh screens for solids removal. From the settling tank the solvent is pumped to the Detrex Solvent Still, Model No.S400. Because they are generally clean (free of solids), waste freon solvents are pumped from the 55 gallon containers directly into the Solvent Still.

Waste solvents are heated to their boiling

TABLE D-1

WASTE SOLVENT RECLAMATION

PRIDE SOLVENTS & CHEMICAL CO., INC.

Waste 1,1,1-Trichloroethane

General Description:	Spent halogenated solvent
Hazardous Characteristics:	Toxic
EPA Hazardous Waste No:	F001 and F002
Storage Mode:	55-gallon drums
Storage Location:	Indoor at 78 Lamar St.
Maximum Quantity Stored:	360 drums (19,800 gals.)
Disposition:	On-site reclamation by distillation
Avg. Annual Qty. Processed:	160,000 gals/yr.

Waste Trichloroethylene

General Description:	Spent halogenated solvent
Hazardous Characteristics:	Toxic
EPA Hazardous Waste No:	F001 and F002
Storage Mode:	55-gallon drums
Storage Location:	Indoor at 78 Lamar St.
Maximum Quantity Stored:	360 drums (19,800 gals.)
Disposition:	On-site reclamation by distillation
Avg. Annual Qty. Processed:	30,000 gals/yr.

Waste Methylene Chloride

General Description:	Spent halogenated solvent
Hazardous Characteristics:	Toxic
EPA Hazardous Waste No:	F001 and F002
Storage Mode:	55-gallon drums
Storage Location:	Indoor at 78 Lamar St.
Maximum Quantity Stored:	360 drums (19,800 gals.)
Disposition:	On-site reclamation by distillation
Avg. Annual Qty. Processed:	2,500 gals/yr.

Waste Tetrachloroethylene

General Description:	Spent halogenated solvent
Hazardous Characteristics:	Toxic
EPA Hazardous Waste No:	F001 and F002
Storage Mode:	55-gallon drums
Storage Location:	Indoor at 78 Lamar St.
Maximum Quantity Stored:	360 drums (19,800 gals.)
Disposition:	On-site reclamation by distillation
Avg. Annual Qty. Processed:	7,500 gals/yr.

TABLE D-1 (CONT'D.)

Waste Freon Solvents

General Description:	Spent halogenated solvents containing trichlorotrifluoroethane
Hazardous Characteristics:	Toxic
EPA Hazardous Waste No:	F001 and F002
Storage Mode:	55-gallon drums
Storage Location:	Indoor at 78 Lamar St.
Maximum Quantity Stored:	360 drums (19,800 gals.)
Disposition:	On-site reclamation by distillation
Avg. Annual Qty. Processed:	2,500 gals/yr.

TABLE D-2

WASTE GENERATION

PRIDE SOLVENTS & CHEMICAL CO., INC.

SCREENINGS

General Description:	Coarse and fine screenings containing waste halogenated solvents
Hazardous Characteristic:	Toxic
EPA Hazardous Waste No:	F001 and F002
Storage Mode:	55-gallon drums
Storage Location:	Indoor at 78 Lamar St.
Maximum Qty. Stored:	2 drums (110 gals.)
Disposition:	Off-site disposal at licensed TSD facility
Avg. Annual Qty. Generated:	1-2 drums (55-110 gals.)

SLUDGE & STILL BOTTOMS

General Description	Sludge and still bottoms generated by the reclamation by distillation of waste halogenated solvents
Hazardous Characteristic:	Toxic
EPA Hazardous Waste No:	F002
Storage Mode:	55-gallon drums
Storage Location:	Indoor at 78 Lamar St.
Max. Qty. Stored:	120 drums (6,600 gals.)
Disposition:	Off-site disposal at licensed TSD facility
Avg. Annual Qty. Generated:	175 drums (9,625 gals.)

Revised By NYSDEC to delete the 3 closed feed tanks

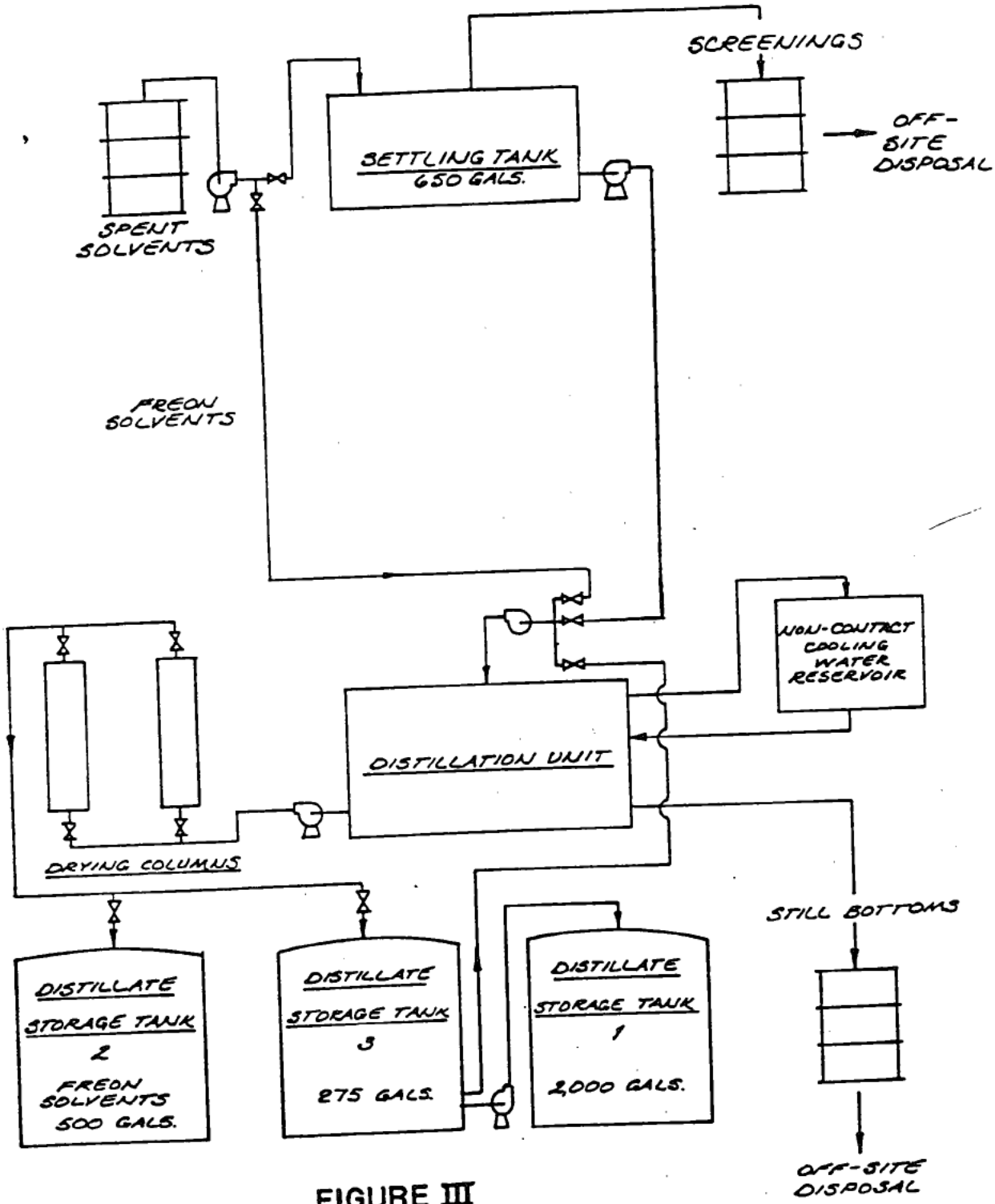

FIGURE III

SOLVENT RECLAMATION SCHEMATIC

PRIDE SOLVENTS & CHEMICAL CO., INC.

point, thereby vaporizing the solvent, freeing it from any non-solvent contaminants. Solvent vapors then pass over condensers, and the clean solvent distillate flows from a condensate pan to a water-cooled water separator.

Heat to the distillation unit is provided in the form of steam by a 20 H.P. Fulton Boiler. Cooling water to the condensers and water separator is supplied by a closed loop non-contact cooling water system.

Distillate from the water separator is pumped through a Detrex Drying System, consisting of two ion exchange columns. Preset valves determine which of the two drying columns is in operation.

Reclaimed freon solvents are directed to a 500 gallon distillate storage tank. Reclaimed 1,1,1-trichloroethane, trichloroethylene, methylene chloride and tetrachloroethylene are directed to a 250 gallon distillate storage tank. Samples of the reclaimed solvents are collected from these tanks and analyzed to confirm that the solvent meets Pride Solvents' reclaim specifications (see Section D-1b.). Off-spec solvent is returned to the distillation unit. Reclaimed solvent is repackaged for sale.

Screenings and sludges generated by the distillation process are collected in 55 gallon drums and disposed of via General Chemical Co., Framingham, MA (EPA ID No. MAD 019371079).

D-1b. RECLAIMED SOLVENTS

To ensure that the reclaimed solvent meets Pride Solvents' specifications, samples of the product are collected, analyzed

and compared against standard specifications. Samples are collected for analyses from each batch of reclaimed solvent. A copy of Pride Solvents' specifications for reclaimed 1,1,1-trichloroethane (Cyclo-Thane) is presented in Appendix C. For the purpose of comparison, a copy of Dow Chemical's specifications for virgin 1,1,1-trichloroethane, and GC analyses for both virgin and reclaimed products are also included in Appendix C.

Reclaimed solvents can be used for most every application as the virgin product. The principal exception is in instances where a manufacturer or government specification expressly prohibits the use of recycled products. A comparison of virgin product and reclaimed product costs is presented in Table D-3, Solvent Costs.

TABLE D-3

SOLVENT COSTS(1)

PRIDE SOLVENTS & CHEMICAL CO., INC.

SOLVENT	UNIT COST PER POUND	
	VIRGIN PRODUCT	RECLAIMED PRODUCT
1,1,1-Trichloroethane	$0.40	$0.30
Trichloroethylene	0.38	0.32
Methylene Chloride	0.32	0.22
Tetrachloroethylene	0.28	0.23
Freon Solvent	1.20	0.65 - 0.75

(1) Costs are based upon bulk volumes and are rounded off to the nearest cent.

D-2g. CONTAINMENT CALCULATIONS

Total Floor Area = 4600 s.f. (drum storage and reclamation areas)

Boiler Room Area = 200 s.f.

Lab Room Area = 360 s.f.

Area Occupied by Rampways = 240 s.f.

Area Occupied by Reclamation Process Tanks and Equipment = 150 s.f.

Net Available Floor Area = 4600-200-360-240-150 = 3650 s.f.

Berm Height = 8 in. (0.67 ft.)

Total Containment Volume = 3650 (0.67) = 2433.3 c.f.

Volume Occupied by Drums and Pallets = 220 c.f.

Net Available Containment Volume = 2433.3-220 = 2213.3 c.f.

2213.3 c.f. (7.48 gals/c.f) = 16,555 Gals.

APPENDIX E

EPOXY SEALANT & COATING

TECHNICAL DATA SHEETS

Resin System	Epoxy/ Polyamide	Federal Test Procedure
Weight per gallon, pounds, mixed	9.90	141,4184
Viscosity, Kreb units, mixed	60-70	141,4281
Percent Solids,		
by weight	60	141,4041
by volume	48	141,4044
Application temperature range, °F	45-125	–
Application thickness		
per coat, mils wet	5.3	–
mils dry	2.5	–
Flexibility ⅛ inch mandrel	Pass	141,6221
Tack free time, hrs. @ 77°F	2-3	141,4061
Hardness, pencil,		
24 hours	HB	ASTM D-3363
3 days	2H	
sward, 7 days	45-55	ASTM D-2134
Impact resistance,		
direct, in-lb	160	141,6226
reverse, in-lb	60	141,6226
Gloss, 60°	95+	141,6101
Abrasion resistance, Taber CS-17 wheel 500gm. load, 1000 cycles, mg loss	50-60	141,6192
Falling sand, litres/mil	60-65	141,6191
Pot life, hours	12-16	ASTM D-2471
Scrub Resistance, 1000 oscillations	Pass	141,6142
Fire Resistance		ASTM E-162
Flame Spread	0	
Fuel Contributed	0-2	
Smoke Developed	0-3	
Salt Spray Resistance, 500 hours	Passed	141,6061
Freeze Thaw Resistance, 50 cycles	Passed	–

MIXING

LIQUI-STEEL epoxy coating is a two-component system, consisting of a base (Mix A) and a catalyst (Mix B). Both components are equivalent in volume and are mixed together and allowed to stand 15 to 20 minutes before coating. NEVER USE WITHOUT MIXING. Mix quantity required for use within 16 hours.

COLORS

Over 800 different colors are available.

PACKAGING

5 gallon steel pails. 1 gallon steel containers.

A. Concrete should be clean and dry. Highly dense concrete floors should be etched with 10-12% hydrochloric (muriatic) acid (1 gallon to every 6 square yards or 1 litre per square meter, spread by stiff-bristle brooms). When bubbling subsides (about 15 minutes), wash with clean water by high-pressure hose until all slush is removed and the surface is neutral to litmus. Final rinsing with 1% ammonia solution followed by clean water is good practise – this ensures thorough neutralization. Allow the surface to dry thoroughly. Remove dust preferably by vacuum-cleaner.

Proper surface preparation means the difference between a long lasting job and a total failure.

B. Steel surfaces should be clean (free from oil, grease, dust, scale, rust and other foreign matter), dry and grit-blasted to a commercial blast as specified by the steel structures painting council specification, SSPC-SP-6. All work blasted in one day should be coated in the same day.

C. Wood should be clean, dry and sanded smooth.

D. Over previously applied coatings consult PRECO's technical staff for requirements.

PRIMER

A. Concrete — none required, but the first coat should be thinned 50%.

B. Steel — for exterior application, or interiors where high humidities or immersion conditions are expected, use LIQUI-STEEL Zinc Primer.

C. Wood — none required, thin first coat 25%.

D. LIQUI-STEEL Non-Slip, on porous surfaces, should be primed with LIQUI-STEEL, in the same color, that has been reduced 50%.

METHOD OF APPLICATION Brush, roller, or spray.

THINNING: Brush or roller, non required. Reduce, as required up to 25% with REDUCER L for spray.

Concrete — reduced 50%. Second coat should be used without thinning.

Curing is accelerated at higher temperatures. Do not apply at temperatures below 50°F.

CLEAN-UP

Clean equipment immediately after use with REDUCER L.

COVERAGE

Concrete and Wood — 50% reduction of 1st coat — about 250 sq. ft. per gallon.

Concrete and Wood — 2nd coat — about 300 to 350 sq. ft. per gallon.

Steel (LIQUI-STEEL Zinc Primer, or LIQUI-STEEL) about 350 to 400 sq. ft. per gallon.

APPENDIX F

TANK DRAWINGS

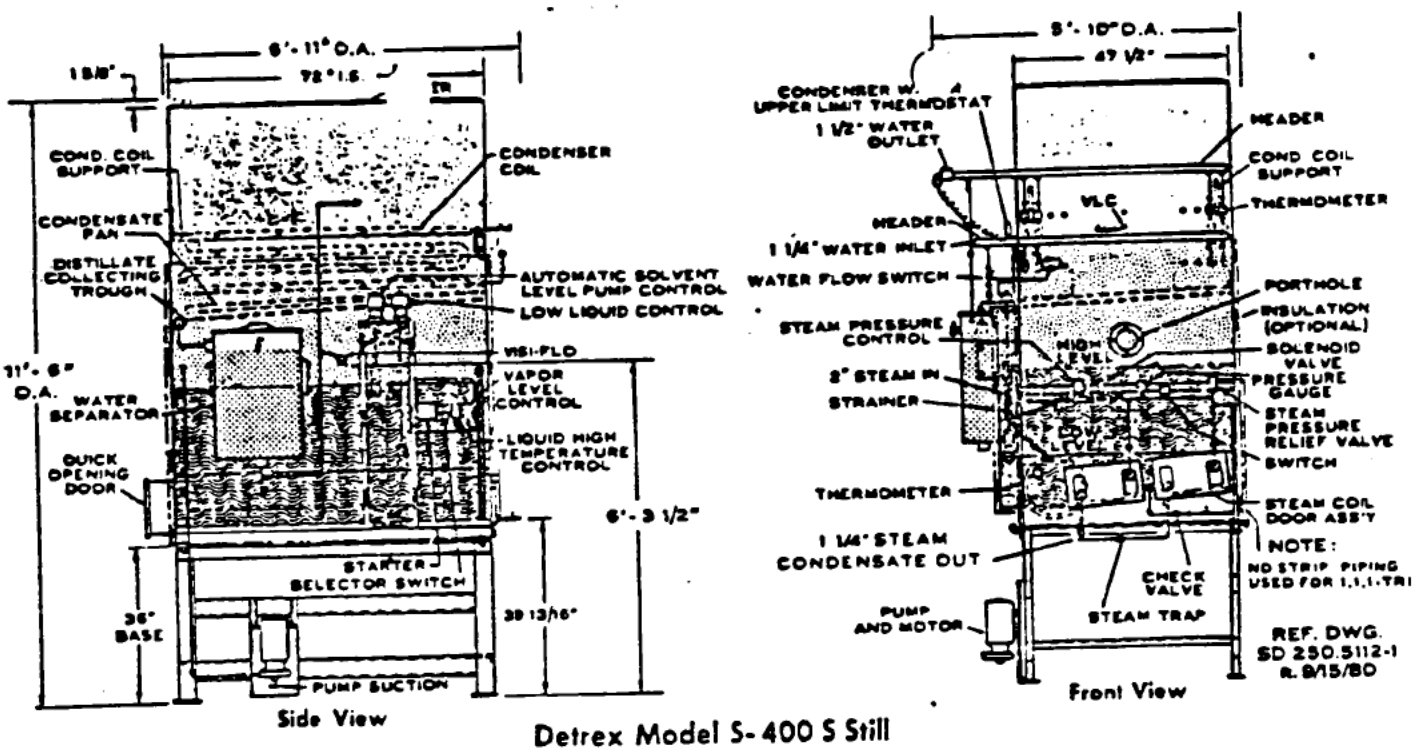

Detrex Model S-400 S Still

TECHNICAL DATA

1. HEAT INPUT	580 lb. steam/hr. maximum
2. RATED VOLTAGE	115/230 V - 1 ph - 60 Hz or 230/460 V - 3 ph - 60 Hz Correction factor for over or under rated voltage, refer to ED 532 graph data sheet

3. DISTILLATION RATE-CLEAN SOLVENT- at rated steam pressure, gal. per hr.		TRICHLOROETHYLENE	PERCHLOROETHYLENE	1,1,1-TRICHLOROETHANE
	Not Insulated (Std.)	380 gph	340 gph	310 gph
	Insulated (Opt.)	400 gph	375 gph	335 gph

4. LIQUID CAPACITY - @ normal operating level 440 gal.

5. TRANSFER PUMP - Iron body 115/230 V - 1 ph - 60 Hz or 230/460 V - 3 ph - 60 Hz, TEBB, 1/2 hp, 3450 rpm 25 gpm @ 20 ft. head

6. FULL LOAD AMPS	
115 V - 1 ph - 60 Hz	15 amps
230 V - 1 ph - 60 Hz	8 amps
230 V - 3 ph - 60 Hz	3 amps
460 V - 3 ph - 60 Hz	2 amps

7. COOLING WATER REQUIREMENTS

		TRICHLOROETHYLENE	PERCHLOROETHYLENE	1,1,1-TRICHLOROETHANE
Not Insulated (Standard)	50°F rise (110°F max. outlet)	1465 gph	1100 gph	1300 gph
	25°F rise (110°F max. outlet)	2930 gph	2200 gph	2600 gph
Insulated (Optional)	50°F rise (110°F max. outlet)	1550 gph	1450 gph	1150 gph
	25°F rise (110°F max. outlet)	3100 gph	2900 gph	2300 gph

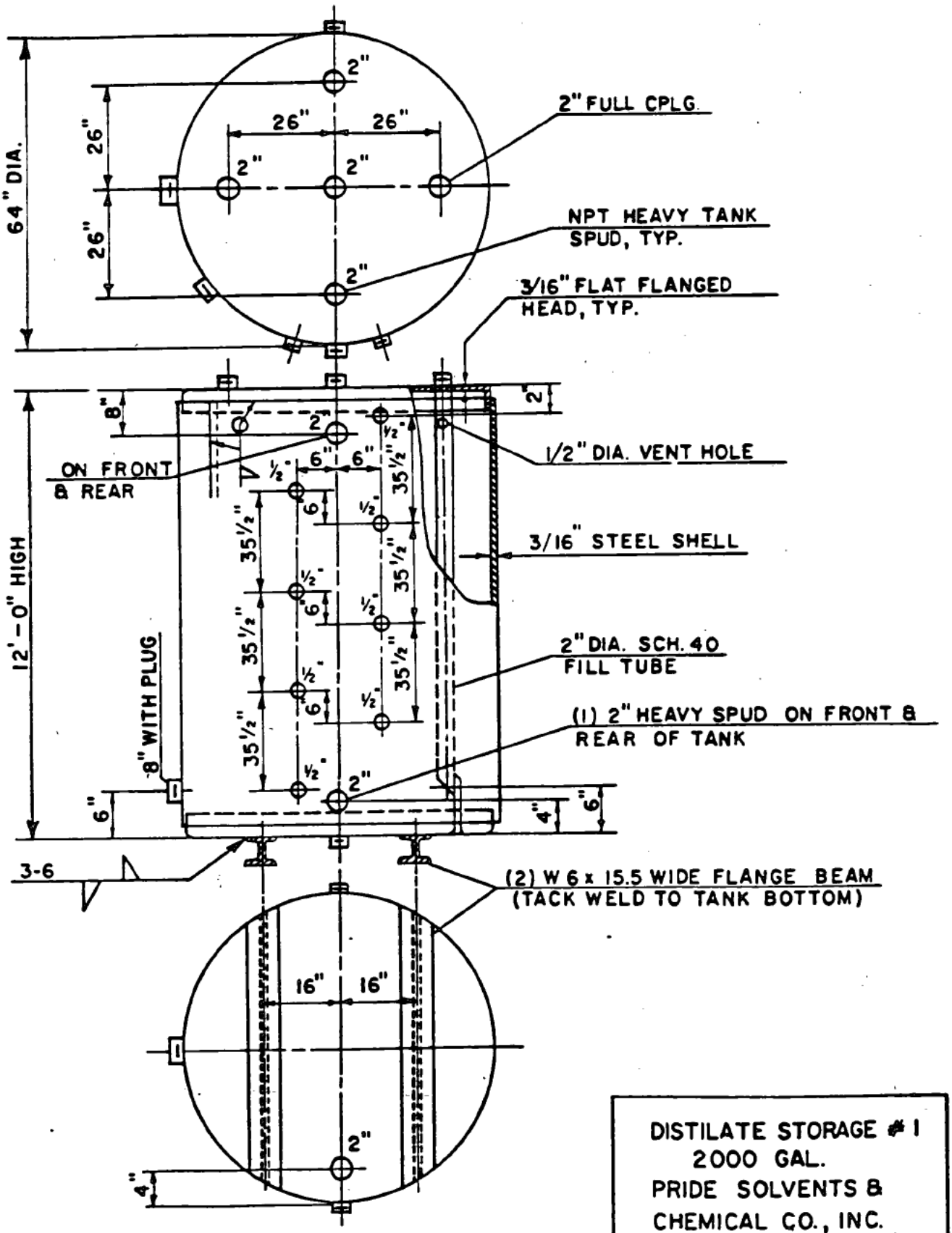

DISTILATE STORAGE # 1
2000 GAL.
PRIDE SOLVENTS & CHEMICAL CO., INC.

H2M HOLZMACHER, McLENDON & MURRELL, P.C.
CONSULTING ENGINEERS, ENVIRONMENTAL SCIENTISTS and PLANNERS

MELVILLE, N.Y.
FARMINGDALE, N.Y.
RIVERHEAD, N.Y.

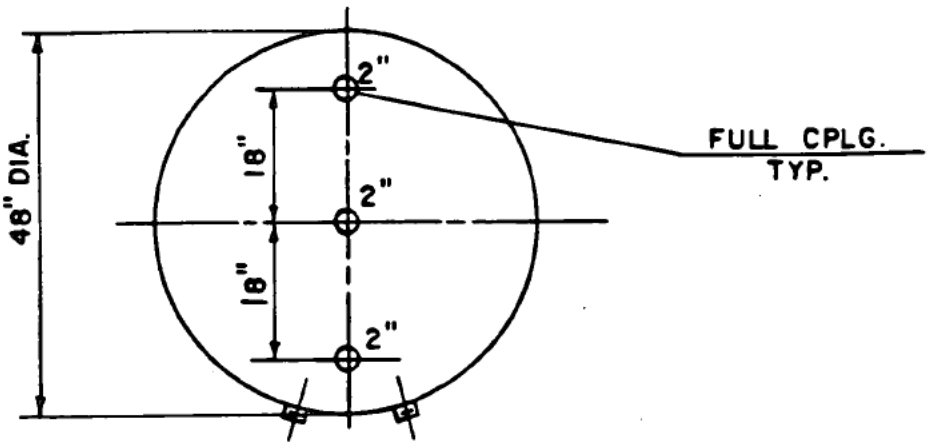

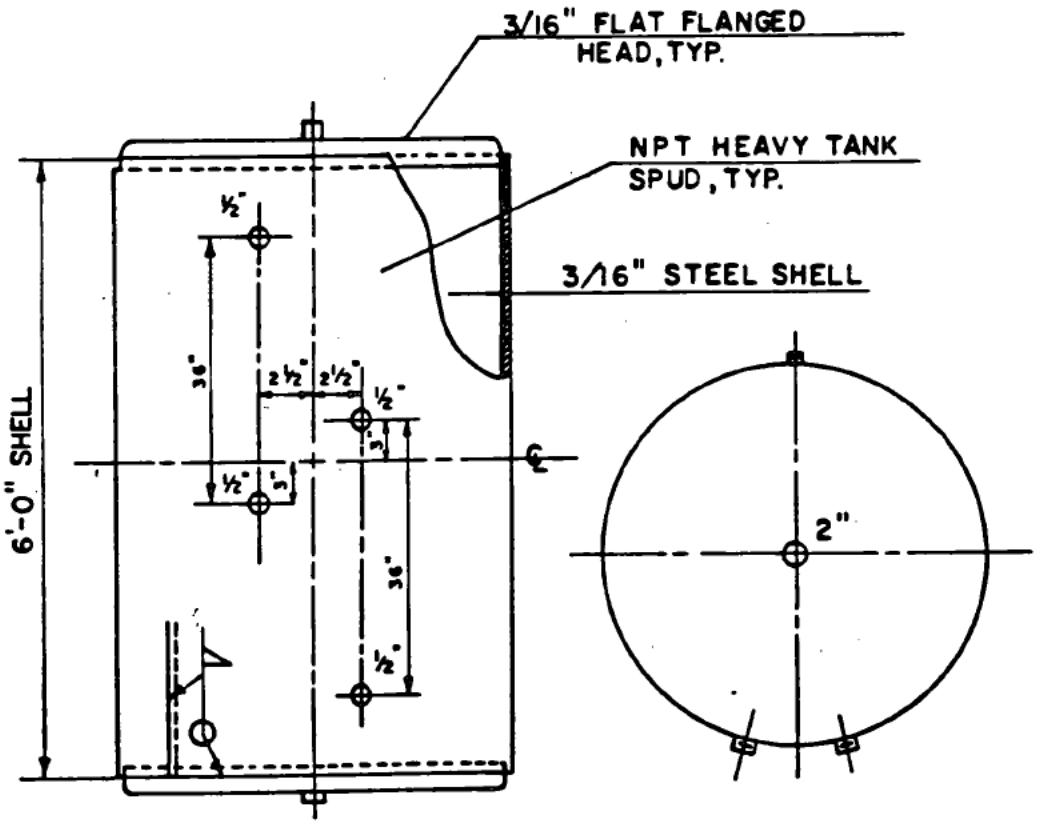

DISTILATE STORAGE #2
500 GAL.
PRIDE SOLVENTS &
CHEMICAL CO., INC.

H2M HOLZMACHER, McLENDON & MURRELL, P.C.
CONSULTING ENGINEERS, ENVIRONMENTAL SCIENTISTS and PLANNERS
MELVILLE, N.Y.
FARMINGDALE, N.Y.
RIVERHEAD, N.Y.

APPENDIX G

ULTRASONIC TESTER

Microcomputer Based Ultrasonic Computerized Thickness Gauge System

Rugged, Accurate and Inexpensive

T-MIKE Features

- Micro-computer Controlled
- Compact, Rugged Construction
- One-step Material Calibration
- Full Numeric Keyboard For Data Entry
- LCD Display
- Differential Mode
- High-performance . . . Transducers
- Automatic Probe Recognition
- 0.001" Resolution
- Data Logging And Printing Interface
- Automatic Correction For Dual Probe Geometry
- Automatic Selection Of English Or Metric Units

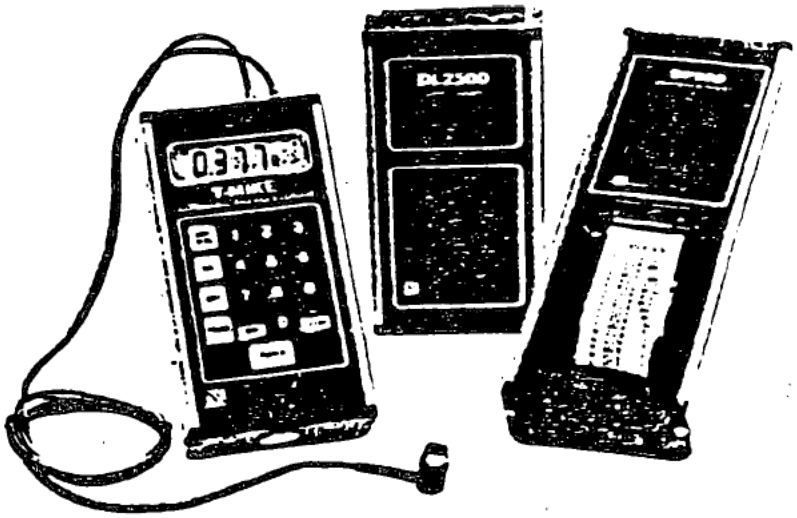

Models For Every Application

T-Mike 2000 is equipped with the standard 5MHz transducer and is today's most advanced general purpose ultrasonic thickness gauge.

The T-Mike 2000 combines the widest possible range of overall thickness measurement (0.070 to 15.999 inches) with sensitivity to material defects required for normal inspection of corrosion, erosion, or pitting.

T-Mike 3000 is equipped with the high sensitivity transducer and is unequaled in detection of small material defects or pitting.

Providing a measurement range of 0.040 to 3.000 inches, the T-Mike 3000 is designed to surpass the most exacting specification now in use in inspection of pipes, boilers, storage tanks, castings, and extrusions. . . . . offers a wide variety of optional tranducers and complete application engineering to optimize the performance of the T-Mike 2000 and 3000 in measuring both metallic and non-metallic substances to the specification and requirement of virtually every industry.

Accurate Ultrasonic Thickness Measurements

The T-Mike gauge incorporates an interactive micro-computer for quick and accurate thickness measurements. Several hundred readings per second are received from the dual element transducer and processed by the micro-computer to produce a single digital thickness measurement automatically corrected for dual probe geometry. The T-Mike offers total portability, simple operation and requires no special operator training.

Battery Operated For Complete Portability

The T-Mike operates with 4 AA NiCad batteries which will yield approximately 16 operating hours between charges. A LOW BAT display will signal when batteries should be recharged. A battery charger is included.

Practical Keyboard and Easily Readable Display

The hermetically sealed numeric touchpad is designed for fast and accurate data entry. Special function keys offer the user rapid flexibility.

The large four-digit liquid crystal display (LCD) gives a quick digital readout as measurements are being made and is highly visible in bright sunlight or in dim work areas.

A NO ECHO display alerts the user if no measurements are being received by the micro-computer.

Automatic Field Data Recordation

The T-Mike may be connected to the . . . Field Printer or the . . . Data Logger to provide a fully portable, error proof, data recordation system.

The Field Printer DP500 produces a hard copy printout of thickness measurements and measurement location and is operated from the keyboard of the T-Mike.

The Data Logger DL 2500 provides electronic memory of up to 2500 measurement location and thickness readings. These data may be transferred to the . . . . . Field Printer or via RS232 interface to any computer system for recordation, analysis, and graphic presentation.

Both the Field Printer and Data Logger are battery operated and designed to be worn on the operator's belt in "harsh" working environments.

Differential Mode

The T-Mike will display the difference from a base or normal thickness when the DIFF function key is used. Thus a quick plus-or-minus measurement can be made in actual thickness or percent variation.

Material Calibration

Easy, one-step material calibration is built into the T-Mike. The operator simply places the transducer on a known thickness of the material, enters the thickness on the keypad, and the T-Mike will automatically calibrate itself by calculating the correct sound velocity.

Simple, One-Step Transducer Calibration (Probe Recognition)

The . . . T-Mike offers one-step probe calibration. By means of a test block incorporated in the T-Mike case, probes can be immediately calibrated by a single key stroke. Thus probes may be changed at any time during operation. The T-Mike will accept alternative probes with equal accuracy.

Compact, Rugged Design

The T-Mike is constructed of durable, extruded aluminum and is suitable for heavy industrial use. Just 6¼ inches high and 3½ inches wide, it fits easily in the palm of the hand.

All electronics are of the highest quality and have been environmentally sealed against dirt, moisture and adverse atmospheric conditions.

Physical Description

Unit Size	3.5 in. wide, 6.25 in. long, 1.5 in. deep. Weight 20 oz. (approx.).
Case	Weather-resistant, extruded aluminum.
Configuration	Hand-held module contains interactive microcomputer with battery-programmed data calculation capabilities (memory and printing modules optional).
Keyboard	Hermetically sealed numeric touchpad with serial function keys.
Data Transmission	Serial output for optional printer or data logger.

Displays

Measurements	4-digit LCD readout.
Coupling Check	NO ECHO LCD display.
Battery Check	LOW BAT LCD display.
Differential Mode	DIFF LCD display.
Unit Systems	Eng./Metric selectable INCH or MM displayed.

Material

Calibration	Calibrates for various steels, aluminum, glass, and plastics automatically.

Power Supply

Battery	AA batteries, rechargable NiCad.
Continuous Operating Time	16 hours with NiCad battery charge.

Measuring Range	Typically 0.040 to 19.999 inches (depending on model and material measured).
Measuring Resolution	± 0.001 in. or 0.01 mm.
Sound Velocity Range	From less than 0.099 inches per micro-second.
Allowable Surface Temperature Range	0° F to 300° F, (-18° C to 150°) High temperature probes available.

Transducer

Description	5 MHz, 0.25 in. diameter included. Full range available.
Connection	Lemo quick-disconnect.
Configuration	Dual-element ultrasonic probe.
Cable	6-foot, environment protected.

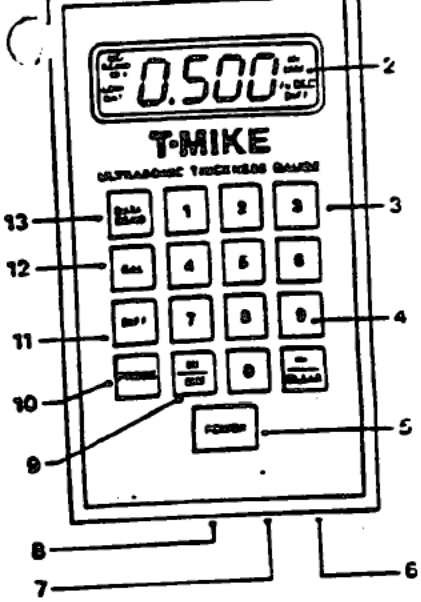

1 Lemo quick-disconnect transducer connector.
2 High contrast, 4-digit LCD indicates modes and measurements.
3 Durable, lightweight extruded aluminum case.
4 Weather resistant, environment sealed numeric touchpad.
5 Power on-off key.
6 Serial port for optional printer or data logger connection.
7 Battery charger connector.
8 Built-in calibration block for transducer recognition.
9 Operator selectable English or Metric mode.
10 Probe recognition calibrates instrument to probe's delay.
11 Differential mode displays the difference from a nominal thickness.
12 One-step material calibration key.
13 Transmits to optional data logger or printer.

DATA LOGGER DL 2500

Physical Description

Unit Size	3.5 in. wide, 6.25 in. long.
Weight	19.5 ounces.
Case	Extruded aluminum.
Configuration	Hand-held or belt mounted.

Data Output

Standard RS232 interface to computer, printer or modem.
Serial output to Field Printer DP 500.

Operation

Memory transmission via RS232 or serial port to Field Printer DP 500 indicated by key-stroke.

Memory held until cleared by depression of protected reset key.

Data may be transmitted to Field Printer DP 500 subsequent to or simultaneous with transmission of data to Data Logger from T-Mike.

Data Input

Serial single cable connection to T-Mike.

Operation

Automatic transmission of thickness readings from T-Mike. Location identification may be entered through the T-Mike.

Visual LED and audible signal to confirm data input.

Available Memory

From 500 to 2500 thickness reading with 5 digit identification code per reading 64K to 320K RAM.

Power Supply

Batteries	4 AA rechargable NiCad.
Operating Time	16 hours between charges. LED visual check to determine battery voltage.

FIELD PRINTER DP 500

Physical Description

Unit Size	3.5 in. wide, 8.87 in. long.
Weight	27 ounces.
Case	Extruded aluminum.
Configuration	Hand-held or belt mounted.

Data Output

16 column thermal paper tape.

Data Input

Serial single cable connection to T-Mike.

Operation

Automatic transmission of thickness readings from T-Mike or Data Logger. Location identification may be entered through the T-Mike keyboard.

Power Supply

6 AA rechargable NiCad batteries. 16 hours operation between charges.

Attachment VIII

B. FACILITY DESCRIPTION

This section presents a general description of the Pride Solvents & Chemical Co., Inc. facility in accordance with 6 NYCRR 373-1.5(a)(2). This general description is intended to provide an overview of the facility.

B-1. GENERAL DESCRIPTION

Pride Solvents & Chemical Company, Incorporated (Pride Solvents) operates a chemical and solvent distribution facility and solvent reclamation facility at a 1.3 acre site located on the west side of Lamar Street, West Babylon, New York (see Drawing No. PRID 84-01-1, Topographic Map). The street address is:

Pride Solvents & Chemical Co., Inc.
78 & 88 Lamar St.
West Babylon, NY 11704

The mailing address is:

Pride Solvents & Chemical Co., Inc.
88 Lamar St.
West Babylon, NY 11704

The Pride Solvents facility consists of two buildings, namely, 78 and 88 Lamar Street (see Drawing No. PRID 84-01-2, Facility Site Plan).

Operations conducted at the 5,800 square foot 88 Lamar Street facility are strictly limited to bulk storage and distribution, drum storage and distribution, and drum packaging for distribution. There are no processing or manufacturing operations conducted. The materials handled are limited to three basic categories: non-flammable, flammable and combustible organic solvents.

Pride Solvents' operations also include the reclamation of chlorinated and fluorinated solvents by distillation in an adjacent facility located at 78 Lamar Street. The facility affords approximately 7,700 square feet of available floor space and is designed to receive waste chlorinated solvents and freons in 55-gallon drums, store the waste solvents in an indoor containment area and reclaim the solvents by distillation. Pride Solvents receives waste solvents exclusively in 55-gallon drums. No bulk shipment of waste solvents are accepted. Waste solvents are accepted only from customers who purchase virgin solvent products from Pride Solvents.

Metal finishing and electronics firms make up ninety percent (90%) of the industries serviced by Pride Solvents' solvent distribution and waste solvent reclamation activities. The remaining ten percent (10%) are comprised of a variety of miscellaneous manufacturing and commercial businesses.

The contact responsible for hazardous waste reclamation activities at Pride Solvents is:

Bruce Brehm, Distillation Manager
(516) 643-4800

B-2. TOPOGRAPHIC MAP

Figure I, Location Map, is a 7.5 minute USGS Topographic Map showing the facility site location and surrounding areas within a one mile radius of the site. Contours are shown in five (5) foot intervals. There are no surface waters within a one mile radius of the facility. A more detailed view of the facility and areas

within a 1,000 foot radius of the facility is presented in Drawing No. PRID 84-01-1, Topographic Map.

B-3. LAND USE

The Pride Solvents site and areas immediately surrounding the site are zoned industrial. Extending further north, south and west are Pinelawn, New Montefiore and St. Charles Cemeteries. Zoning maps for the area may be obtained from the Town of Babylon, Planning Dept.

B-4. LOCATION

The Pride Solvents facility is located on a 1.3 acre site on the west side of Lamar Street, West Babylon, Suffolk County, New York. The site is approximately three miles south of the Long Island Expressway (I-495) and one mile east of Wellwood Avenue. The site is situated approximately 1,000 feet east of the Babylon Town Landfill.

B-5. WIND ROSE

As shown in Figure II, Wind Roses, summer wind direction prevails from the southwest quadrant, and winter winds from the northwest, north and northeast.

B-6. FLOOD-PLAIN STANDARD

The Federal Emergency Management Agency (FEMA) Flood Insurance Rate Map, Community Panel No. 360790 0020C, indicates that the Pride Solvents facility is not located within a 100 year

flood-plain. The facility site is located in an area designated with minimal flooding (Zone C). Flood-plain maps can be obtained from FEMA.

B-7. TRAFFIC PATTERNS

Access to the Pride Solvents facility from the Long Island Expressway is via Wellwood and Edison Avenues. Traffic from the Long Island Expressway turns onto Wellwood Avenue and travels south to Edison Avenue. A left hand turn is made at the traffic signal at the intersection of Wellwood and Edison Avenues. Traffic travels one mile east on Edison Avenue to Lamar Street. A left hand turn is made onto Lamar Street, and the facility site is approximately 1/4 mile north on the left hand side of the street.

The Long Island Expressway is a six lane, two-way interstate, Wellwood Avenue is a four lane, two-way main road, and Edison Avenue and Lamar Street are both two lane, two-way roads.

Entry onto the facility site is by two truck gates facing Lamar Street. One gate is located between the 78 and 88 Lamar Street buildings. The second gate is located just north of the 88 Lamar Street building. Hazardous waste deliveries are made only via the gate located between the two buildings. Employee parking is limited to the south side of the 78 Lamar Street building and along the north property line.

Pride Solvents utilize two (2) size trucks for transporting waste solvents to the site. The smaller sized vehicles have a load capacity of 12,000 pounds and weigh 28,000 pounds fully

loaded. The larger vehicles have a load capacity of 20,000 pounds and weigh 36,000 pounds fully loaded.

Vehicles delivering spent solvents to the reclamation facility enter the site from Lamar Street through the entrance gate located between the two buildings. The vehicles proceed straight ahead between the buildings until the back of the truck is in front of the entrance door to the reclamation facility. Forklifts equipped with drum pickers are used to transfer the drums of waste solvent from the trucks to the drum storage area within the reclamation facility. Road surfacing between the two buildings consists of a combination of asphalt and concrete pavement.

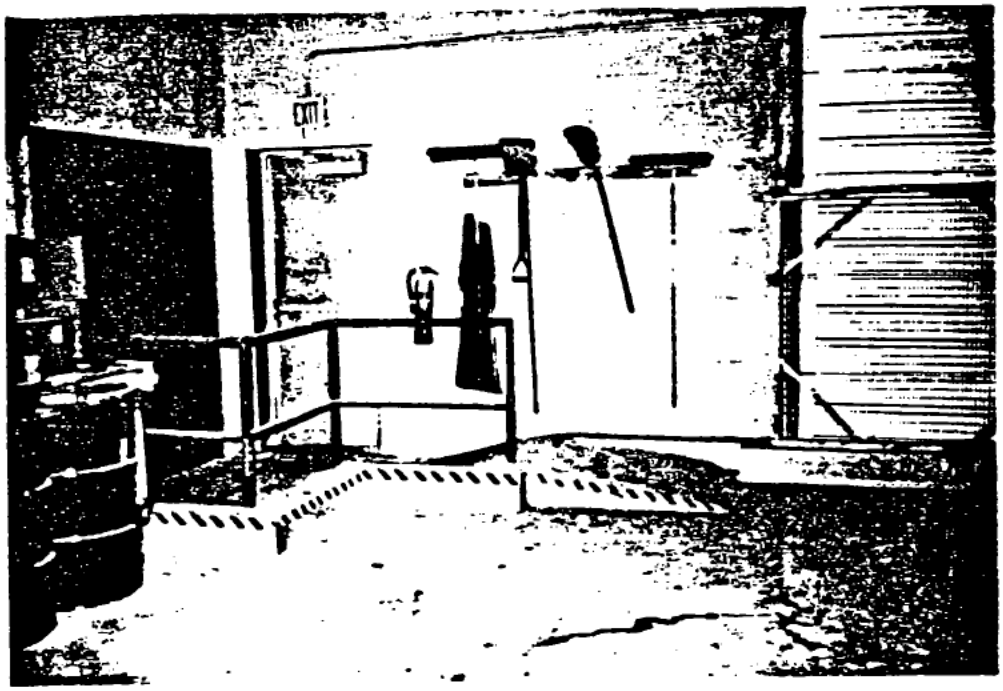

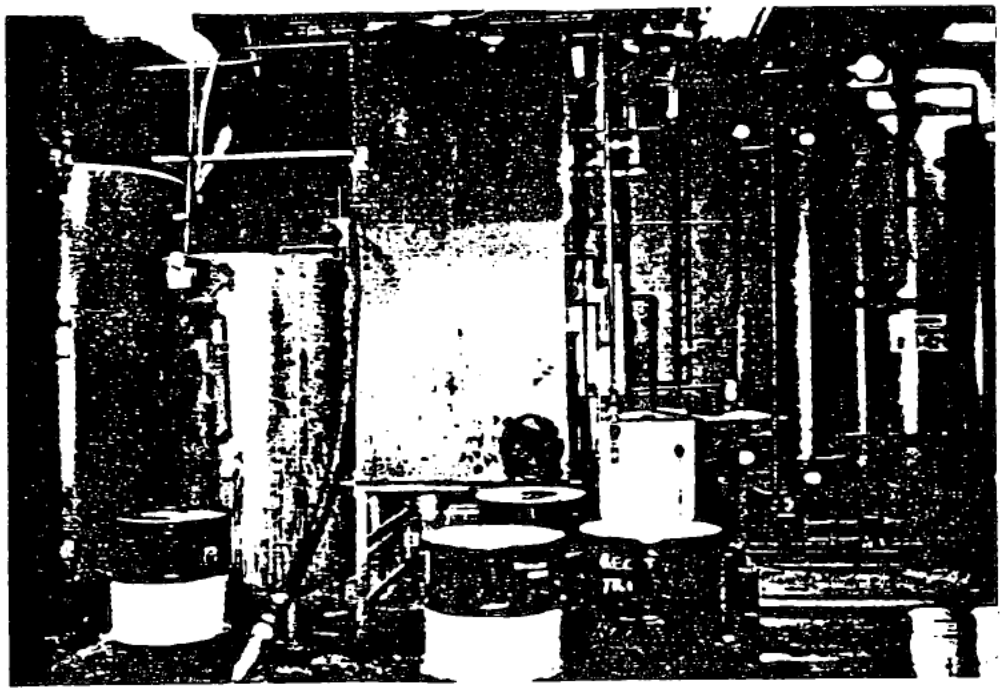

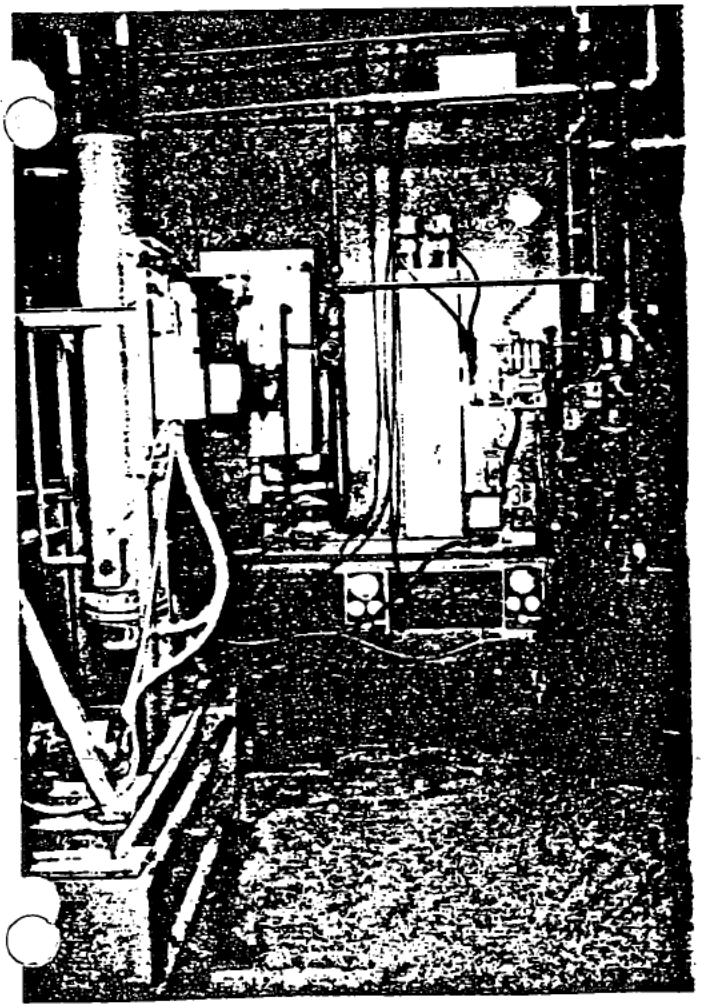

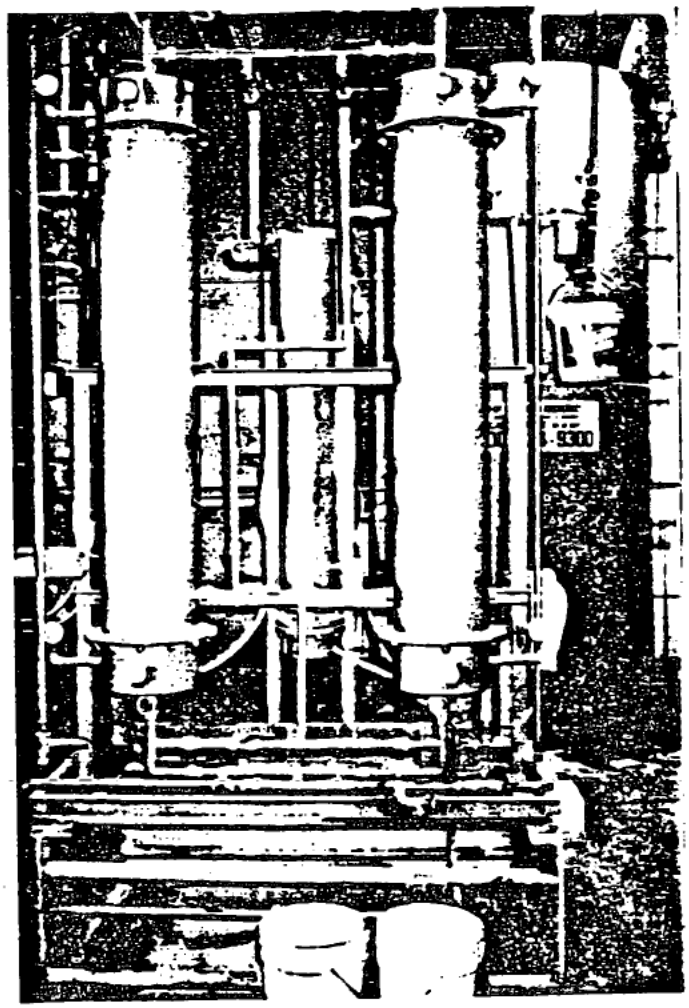

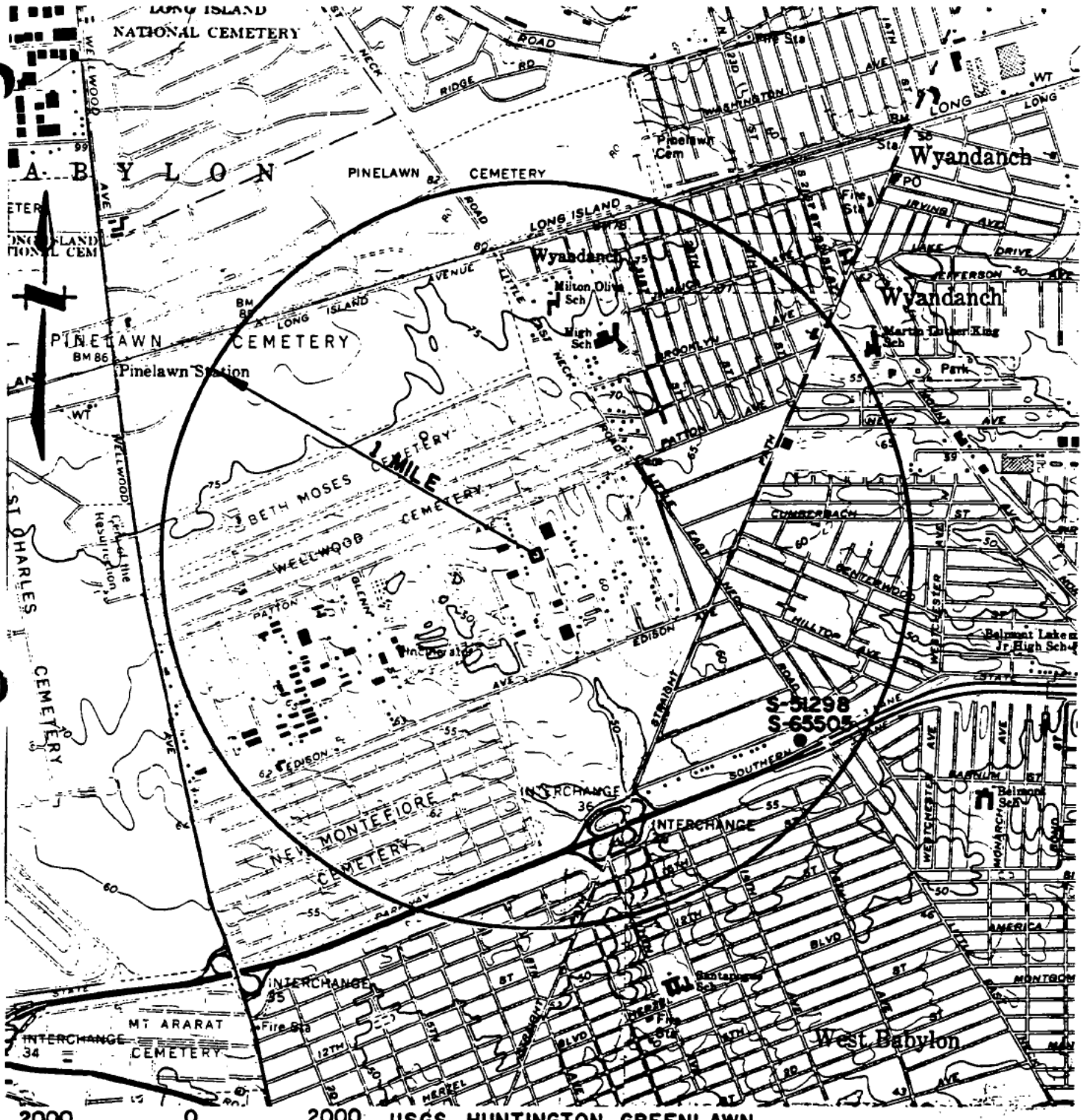

USGS - HUNTINGTON, GREENLAWN, AMITYVILLE & BAY SHORE WEST QUADRANGLES 7.5 MIN. SERIES

LOCATION MAP

SHOWING PUBLIC WATER

PRIDE SOLVENTS & CHEMICAL CO., INC.

WEST BABYLON, SUFFOLK CO., NEW YORK

EPA I.D. NO. NYD 057722258

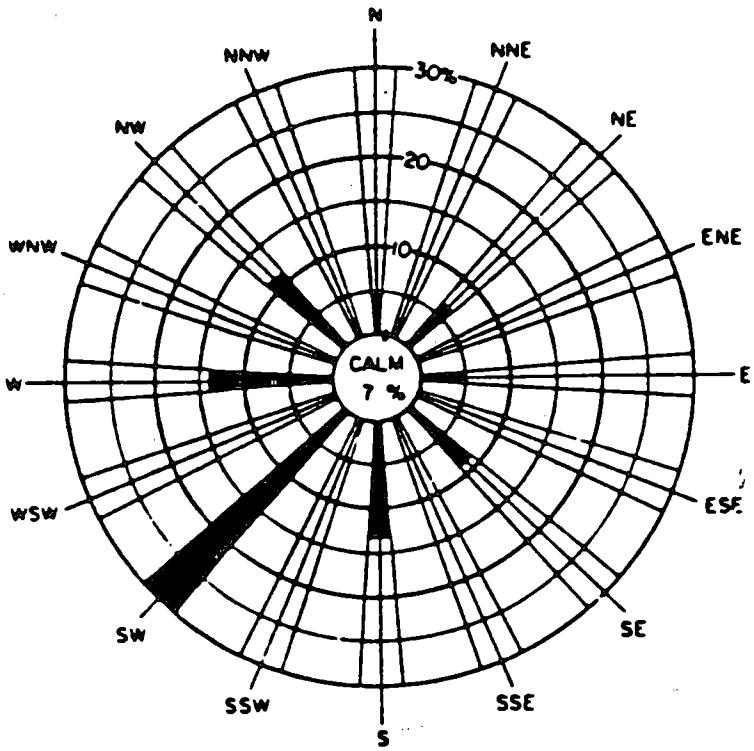

JULY

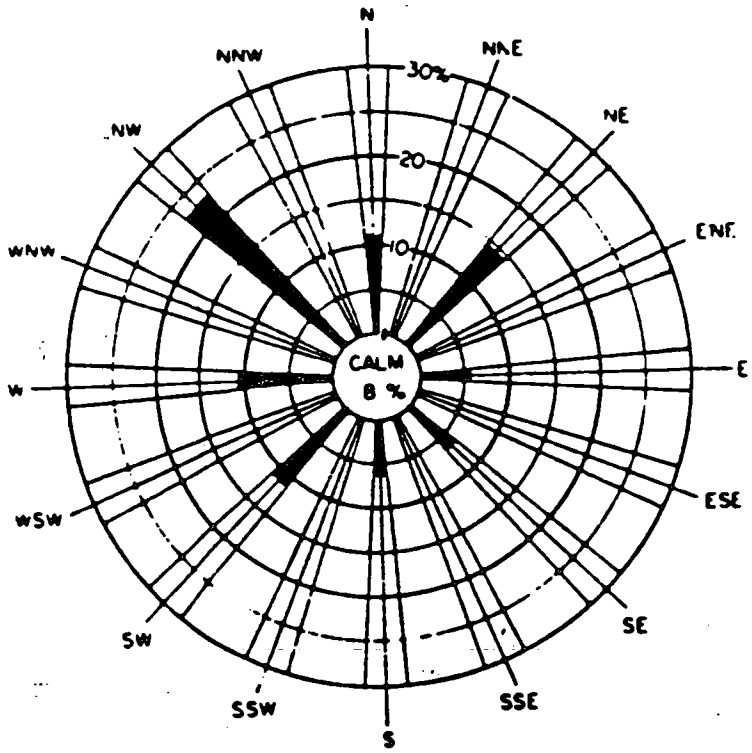

FEBRUARY

FIGURE II

WIND ROSES

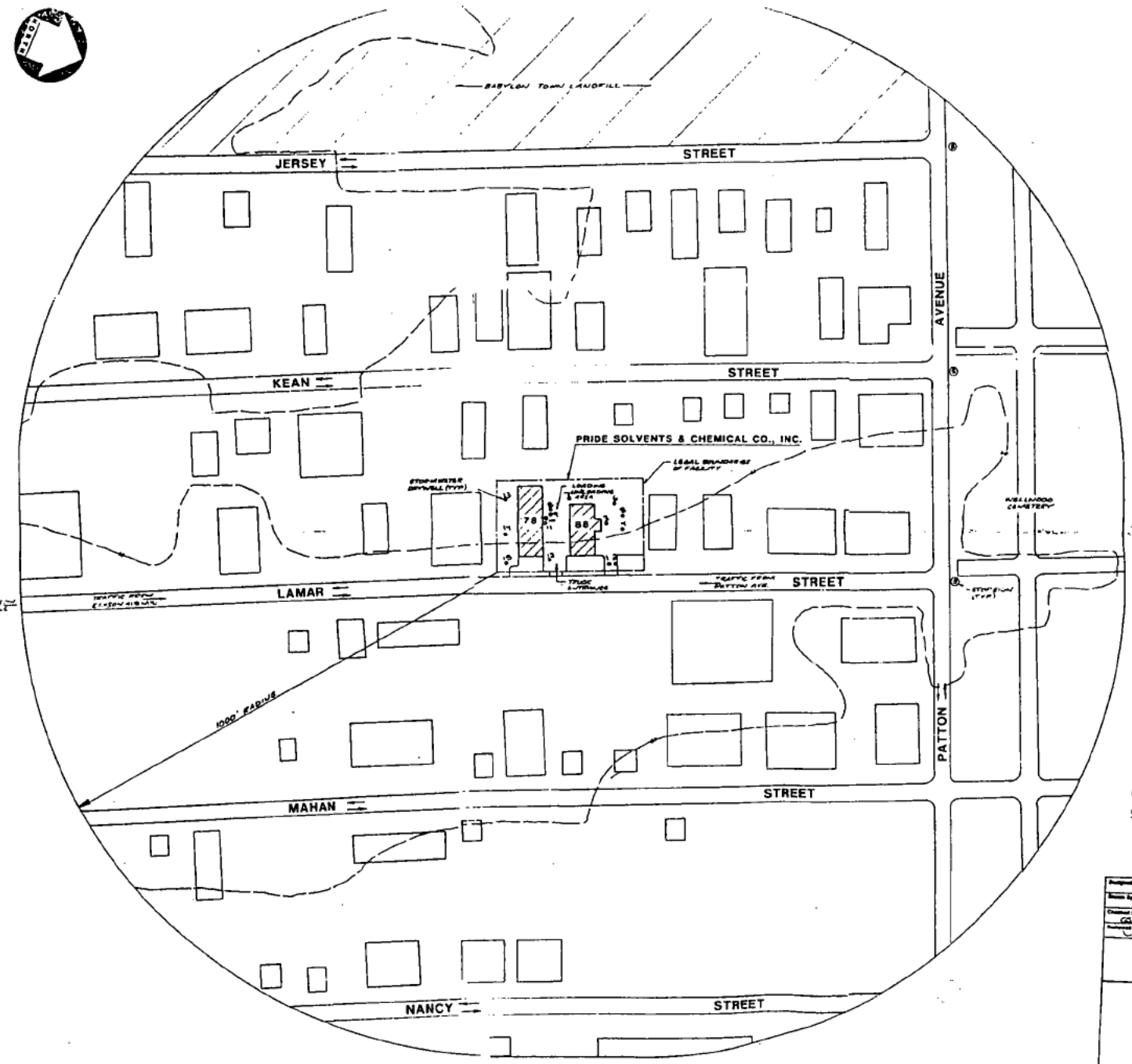

NOTES:

1) THE TOPOGRAPHIC MAP WAS DEVELOPED USING USGS AMITYVILLE, NEW YORK 7.5 MINUTE QUADRANGLE (CONTOUR INTERVAL = 5 FEET) PHOTO REVISED 1979.
2) THE SURROUNDING AREAS ARE ZONEDINDUSTRIAL.
3) THERE ARE NO SURFACE WATERS WITHIN 1,000 FEET OF THE FACILITY.
4) CONTOURS WITHIN THE FACILITY SITE VARY LESS THAN 2 FEET.
5) ON-SITE DRAINAGE IS DIRECTED TO STORMWATER DRY WELLS.

Designed by GJM	Project No. PRID 84-01
Drawn by MEW	Drawing No. PRID 84-01-1
Checked by GG	Scale 1"=100'
Reviewed by	Date NOV 1984
Revisions	

PRIDE SOLVENTS & CHEMICAL COMPANY, INC.

HAZARDOUS WASTE MANAGEMENT

H2M Consulting Engineers Environmental Scientists Planners

Holzmacher, McLendon & Murrell, P.C.

Melville, N.Y. Riverhead, N.Y. Farmingdale, N.Y.

477

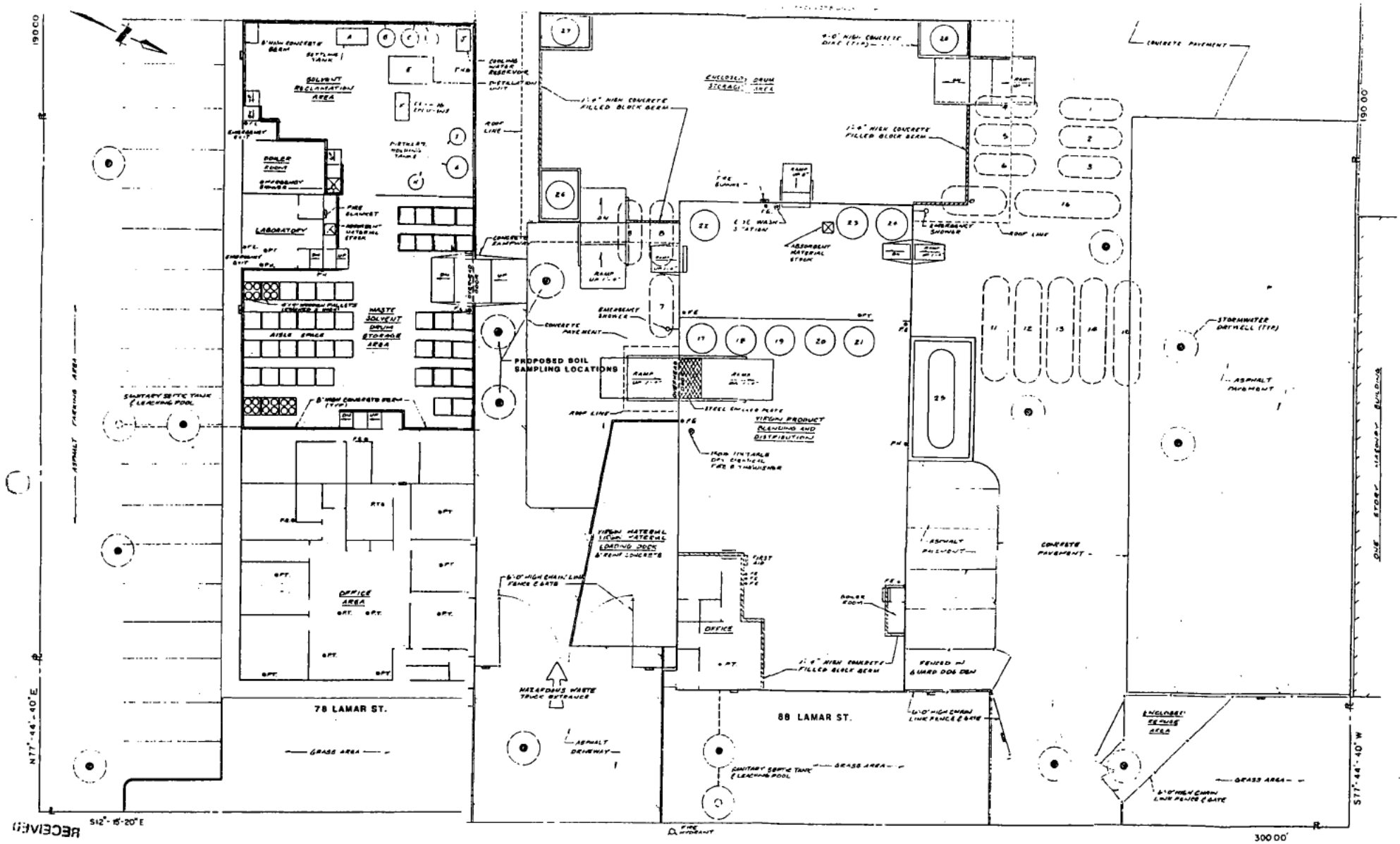

RECEIVED

LEGEND

- PAGING TELEPHONE
- PAGING HORNS
- FIRE EXTINGUISHER
- WARNING SIGN
- EDGE OF ASPHALT PAVEMENT
- STORMWATER DRYWELL

H2M Consulting Engineers Environmental Scientists Planners

Holzmacher, McLendon & Murrell, P.C.

Melville, N.Y. Riverhead, N.Y. Farmingdale, N.Y.

Sheet Title: FACILITY SITE PLAN

Sheet

Designed By: JJM

Drawn By: AJF

Checked By:

Reviewed By:

Date: NOV. 1994

Revisions: JULY 1984 ADDED ENCLOSED DRUM STORAGE AREA

PRIDE SOLVENTS & CHEMICAL COMPANY

HAZARDOUS WASTE MANAGEMENT

478

L. CERTIFICATION

L. CERTIFICATION

I certify under penalty of law that I have personally examined and am familiar with the information submitted in this document and all attachments and that, based on my inquiry of those individuals immediately responsible for obtaining the information, I believe that the information is true, accurate, and complete. I am aware that there are significant penalties for submitting false information, including the possibility of fine and imprisonment.

DATE: OCT 10, 1986

SIGNATURE: Arthur W. Dhom
Arthur Dhom, President

New York State Department of Environmental Conservation
Building 40 - SUNY, Stony Brook, New York 11790-2356
Phone (516) 444-0365
Fax # (516) 444-0373

NYD

EARTH DAY 25 1995 ENVIRONMENTAL PARTNERS

Michael D. Zagata
Commissioner

June 22, 1995

ENVIRONMENTAL PROTECTION AGENCY REGION
1995 JUN 29 PM 12: 11
AWM-HAZ WASTE FAC. BRANCH

Mr. Arthur Dhom, Jr.
President
Pride Solvents & Chemicals Co., Inc.
6 Long Island Avenue
Holtsville, NY 11742

Re: 6NYCRR Part 373 Permit
DEC Permit Number 1-4720-00299/00002-0
EPA I.D. No: NYD057722258

Dear Mr. Dhom:

In conformance with the requirements of the Uniform Procedures Act (Article 70, ECL) and its implementing regulations (6NYCRR Part 621), enclosed please find:

I. Final 6NYCRR Part 373 Permit with Modules and Attachments

II. The Responsiveness Summary for the comments received from you and the Town of Babylon during the comment period, which ended on July 22, 1994.

III. The Summary Hearing Report pertaining to the hearing held on May 19, 1995.

Please read all conditions carefully and if you have any immediate questions, please contact me at (516) 444-0361.

Sincerely,

Roger Evans

Roger Evans
Permit Administrator
Region I
Division of Regulatory Services

RXE:cg
Enclosures

w. enclosure

cc: A. Bellina, Chief New York Permit Section, EPA Region II
R. Becherer, Regional Hazardous Substances Engineer, Region I
R. Fogel, Chairman, Environmental Conservation Commission, Town of Babylon
E. Buhrmaster, Administrative Law Judge, Albany Office
R. Evans, Division of Regulatory Services, Region I

with pages 1-4 of the permit

cc: E. Dassatti, Chief, Bureau of Eastern Hazardous Waste Programs, Albany Office
D. Lucia, Supervisor, Region I Hazardous Waste Programs, Albany Office
I. Natarajan, Environmental Engineer, Region I Hazardous Waste Programs, Albany Office

NAME: **Pride Solvents & Chemical Company, Inc.**

LOCATION: **West Babylon, New York**

I.D. #: **NYD057722258**

NYSDEC COUNTERPART: Isaac Natarajan [NYSDEC-HQ] (518) 457-6072
Fax #: (518) 457-0629

PERMITTING STATUS AS OF: 3/10/95

EPA issued a RCRA permit to Pride effective April 8, 1986 & it will expire April 8, 1996. This permit only mentions a preliminary assessment report. The permit mentions a site investigation work plan to be implemented since it is believed that a release/contamination has occurred at sometime. A draft EPA HSWA permit was sent to NYSDEC on June 2, 1994 for joint public noticing with the state's draft Part 373 permit (however, state's permit was already public noticed: 6/1/94 - 7/22/94). Our draft HSWA permit mailed to the state only included a **generic TC waste module since at the time there is no storage of TC waste occuring at the site.** Obviously, we would still need to issue a HSWA permit to cover the organic air emission requirements, waste min. & min. tech. req. The following spent solvents are stored & reclaimed at this facility: (1) 1,1,1-Trichloroethane (F001 & F002); (2) Trichloroethylene (F001 & F002); (3) Methylene Chloride (F001 & F002); (4) Tetrachloroethylene (F001 & F002); (5) Freon (F001 & F002) and (6) Sludge & still bottoms generated by on-site reclamation of solvents (F002 & F004). The designed storage capacity of the container storage area is 19,800 gallons or 360 55-gallon drums. The solvents are transferred to a settling tank & then distilled in a stainless steel distillation unit. The distillates are collected in three carbon steel distillate storage tanks (?200, 500 & 275 gallons?).

On February 10, 1994 a letter was sent from A. Bellina to A. Dhom, Jr., President of Pride Solvents. We proposed the strategy of requesting Pride to request from us a Class 1 modif. to change the expiration date of Pride's RCRA permit (currently it is May 8, 1996). The reason being that once DEC issues the Part 373 permit there will be overlapping Federal & State requirements imposed upon Pride.

Isaac N. indicated to me that the NYSDEC Part 373 permit has not been issued to the facility. **The draft Part 373 permit was public noticed from June 1, 1994 to July 22, 1994.** The draft Part 373 permit is for the following storage capacity: **tanks: 4,025 gallons & containers: 19,800 gallons for the F001 & F002 codes.** When developing the C.A. module, he noticed that their was no liability insurance in our old EPA RCRA permit. The site is state registered as a contaminated site. He indicated that the site is very badly contaminated, consequently, Pride Solvents could not get any insurance company to cover them & thus was not part of the Part 373 application submitted to the state. Went to court & they were able to get insurance at a **high** premium. Once that was dealt with, DEC moved forward drafting a Part 373 permit. Then there was an argument over how much of the contamination on- & off-site that Pride was responsible for remediating. Pride indicated that there were a number of responsible parties for the large contaminated plume. Pride stressed that they were a small company & could not afford the estimated cost of remediation (approx. 25 million dollars). Therefore, Pride began negotiating to be responsible for **on-site** clean-up & that the DEC remediation section [State Superfund] deal with the off-site clean-up. From these negotiations, DEC developed certain permit conditions for the draft Part 373 permit. If Pride does not cooperate with the State Superfund with dealing with the off-site contaminations, DEC would put off-site problems under the CA module. At the present time (3/95), DEC & Pride are negotiating this language. The town of Babylon raised questions on the draft Part 373 permit & thus there will be a hearing with respect to the draft Part 373 permit. **Isaac N. hopes to issue the Part 373 permit by the end of October.**

CORRECTIVE ACTION COUNTERPART: Mike Infurna
CORRECTIVE ACTION STATUS AS OF: 2/18/92 (issuance of permit)

CONTACTED FOR STATUS	DATE	STATUS