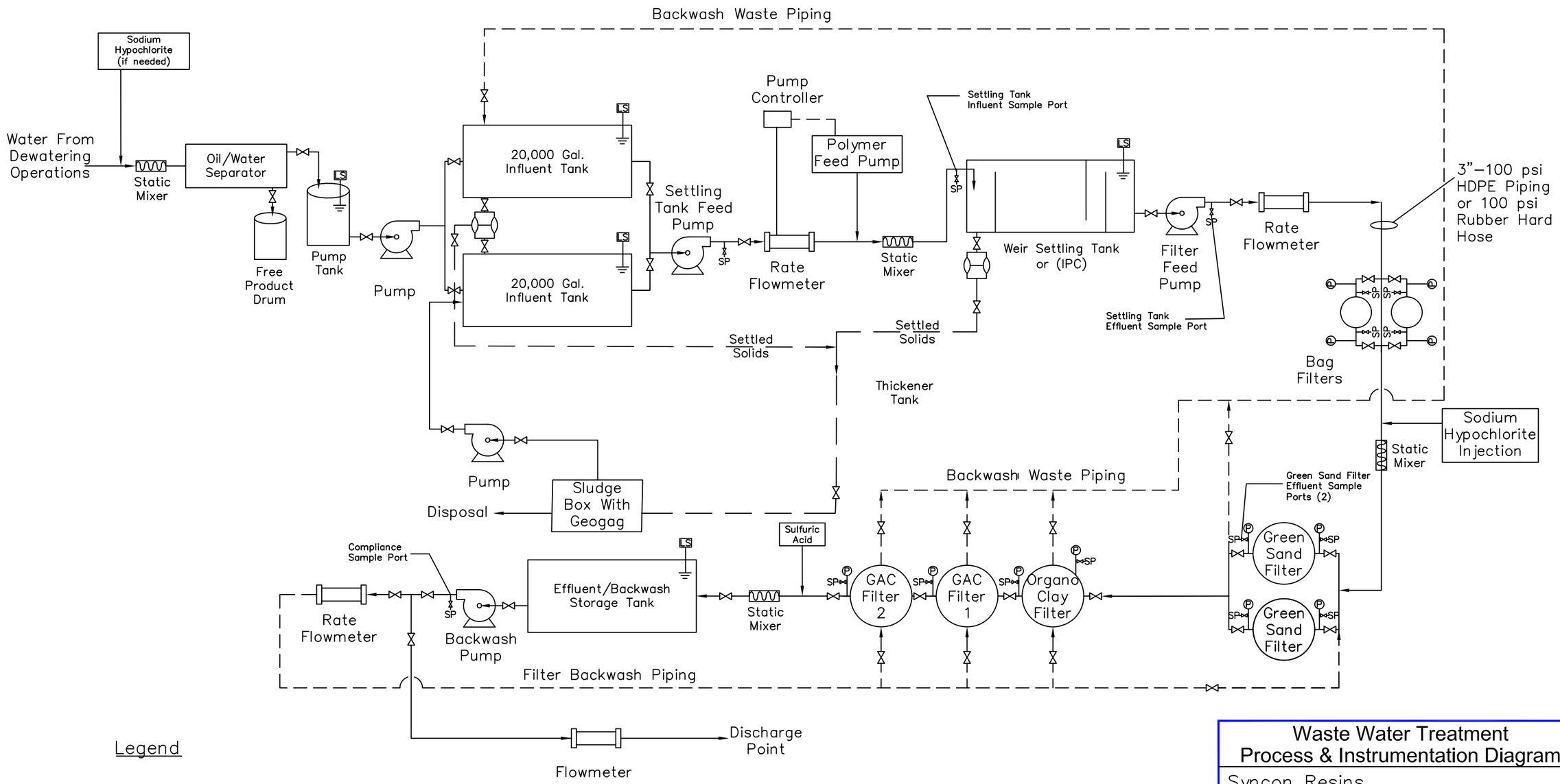

Legend

- Valve
- Pressure Indicator
- Sample Port
- Sludge Pump
- Level Sensor

581565

Revised 2/22/19
Revised 4/20/17

Waste Water Treatment Process & Instrumentation Diagram

Syncon Resins
Superfund Site
Operable Unit 2
South Kearny, New Jersey

SEVENSON ENVIRONMENTAL SERVICES, INC.

DRAWING 2

DATE:	1/9/17
DRAWN BY:	C. Bigelow
CHECKED BY:	M. Walker
CAD FILE:	WWTP–PID
SCALE:	None