E.C.JORDAN CO. ENGINEERS & SCIENTISTS

261 Commercial Street/P.O. Box 7050
Portland, Maine 04112
(207) 775-5401 Telex 94-4329

5096-00

November 19, 1986

SUMMARY OF MEETING MINUTES
FIRE TRAINING AREA PHASE II/IV-A
SUFFOLK COUNTY AIR NATIONAL GUARD BASE

DATE OF MEETING: November 13, 1986

PLACE OF MEETING: Suffolk County ANGB, New York

ATTENDEES: See Attachment No. 1

Lt. Col. M. Washeleski of the Air National Guard Support Center opened the meeting at about 10:15 by reviewing the purpose of the meeting and having the attendees introduce themselves. The list of attendees at the meeting is included as Attachment 1.

William Owens of ORNL provided an overview of the project in accordance with material presented in Attachment 2.

William Fisher of E.C. Jordan Co. commenced briefing of the draft work plan by reviewing Project Team Members and their respective responsibilities, work conducted concurrent to preparation of the draft work plan, and the focus of the meeting presentation of the proposed scope of work for site characterization.

Ronald Lewis of E.C. Jordan Co. presented the results of the background review and partial well survey, and the technical approach for the Site Investigation proposed for the Site Characterization aspect of the project. Comments received were as follows:

1. Date of installation of the underground overflow tank and above-ground fuel tank should be stated if known.

2. A deep soil boring adjacent to the concrete pad supporting the above-ground fuel tank should be considered if shallow soil sampling suggests contamination to have previously occurred in this area.

3. A deep soil boring adjacent to Area 5 should be considered if the shallow hand augers encounter significant contamination.

356593

4. Monitoring wells should be developed by pumping water out of the installed well.

5. NYSDEC will provide comments regarding disposition of soil cuttings.

6. The U.S. EPA requested a copy of the IRP Quality Assurance Project Plan.

Mr. Joseph LaTrenta, Suffolk County Airport Manager, reviewed the following items to be observed during the conduct of the work at the site:

- Access to the site shall be via the perimeter service road, to a hardstand and then onto the active taxiway.

- If drill rig work is to occur within 139 feet of the center line of the taxiway, Mr. LaTrenta should be notified so appropriate notifications can be made.

- Height of rig at any point should not intersect a line rising from the edge of the runway at a slope of 7H; IV.

- Provide a detailed schedule of the field activities to Mr. LaTrenta so that those work locations triggering restrictions of the taxiway and/or adjacent runway can be anticipated by the airport ahead of time.

The meeting was adjourned by Mr. Owens with the request that the minutes be sent to and distributed by Mr. Owens.

Vince - FYI:
note highlighted items.
Gary
11/20

Suffolk County Air National Guard Base

IRP Meetings - November 12 and 13, 1986

Background

The NYSDEC filed suit against the United States in 1981 for the potential contamination from the former Suffolk County Air Force Base in Westhampton, N.Y. This suit includes 3 sites - the Fire Training Area (FTA) which is undergoing an IRP Phase II/IVa study and 2 landfills which are undergoing an IRP Phase I study. The USAF operated this base from 1951 to 1971 (approximately); the land was then sold to Suffolk County which operates a County Airport and also leases some of the land to the Air National Guard.

This site is directly above 2 aquifers. One aquifer (the nearest to the surface) is for local water use while the other, deeper aquifer is used as a drinking water supply for all of Long Island.

Some of USAF wastes during the time that the base was active were sent off-site (possibly to a nearby Town Landfill). This should be checked out with the ERRD project manager for the landfill site, if one exists.

Check w/Carole on this to see if the Bleydenburgh L.F. or any other site ready for ranking. If not, we may need to eventually get FIT to do an SI.

Requested info of Carole 11/21

A) Phase I - 11/12/86

- this study was contracted out by the USAF (tasking and funding by USAF Major Command) to DOE (Oak Ridge National Lab) via an Interagency Agreement; DOE then subcontracted this task out to HAZWRAP. EPA can use as prime contact either MAJCOM, ANG Base or AFRCE.

- this is not a Phase I study for entire former AFB but only for the 2 landfills of concern (relative to the NYS litigation). Any complete Phase I report would have to be implemented by the US Army Corps of Engineers (COE) under its DERP program. The COE list of former sites to be investigated should be reviewed to determine whether this facility is included.

- Landfill 1: only used by USAF for a 2 month period during the deactivation phase. Landfill 2: 7 or 8 PCB transformers disposed of after the USAF left; they may have been removed by NYSDEC. Neither landfill was used by the USAF for hazardous waste disposal; the Phase I report concludes, however, that several monitoring wells should be installed due to the presence of hazardous waste.

Questions/Comments

- the only way wastes found can be discriminated/fingerprinted to a particular responsible party is thru the use of documentation, timing, interviews and historical aerial photos.

- it was noted that much of the documentation on this former USAF Base was likely to have been destroyed (possibly in a fire). There was very little information on hazardous waste handling.

- why did Phase I report not recommend any surface soil sampling? For LF 1, there was no concentration of drums or other known disposal areas and the contractor did not feel that random sampling over 8 acres was appropriate. For LF 2, the only known disposal was that of PCB transformers; therefore, the contractor felt they should go directly to monitoring wells.

- comparisons to Griffiss AFB (an active facility):

  - it is likely that GAFB Phase I report references interviews (i.e., 1 person stated ..., 3 people noted ..., etc.); it should be suggested that the same thing be done here if such is not the case.

  - there may not be as many sites here as at GAFB: lack of data may not be able to confirm this supposition; however, there were not many on-base installations/production facilities and an off-site disposal facility (Town Landfill) right next door was probably utilized.

- it was noted that this was a draft Phase I report with the government agencies requested to comment by December 1st. Normally, a Phase I report is simply issued in final; however, providing comments will not necessarily mean that such will be incorporated into the final report.

- the Air National Guard Base, currently leasing a section of the Airport property, is undergoing its own Phase I investigation of its leased property.

B) Phase II/IVa - 11/13/86

- this study was contracted out to E.C. Jordan by the DOE. This Phase II/IVa report is dated 10/86 and investigates the Fire Training Area (FTA) only. The entire project is expected to take approximately 68 weeks, starting today.

- in this case, the primary responsible party is the ANG, not the USAF. Only at the point where a preliminary (draft) remedial action plan (RAP) is proposed will the AF and ANG coordinate; otherwise, it is solely an ANG program. This work plan is for a site characterization study leading eventually to a RAP.

Characterization Study

- the contractor did a mini record search and a monitoring well inventory (still ongoing) for this study.

- information on water table elevation and ground water (GW) flow was gleaned from a 1986 USGS report.

- there are approximately 9 existing monitoring wells (5 years old) which go down to the water table. These are only used for elevation and flow characteristics, not contaminant characterization.

- there are 5 potential spill areas around the bermed FTA, the use of which was terminated 8/86 (although it may reopen eventually). Local Fire Departments occasionally used the FTA.

- Compuchem (an EPA CLP lab) will be used to analyze the soil samples.

- the monitoring wells are to be constructed using PVC; the contractor feels that this material is appropriate based upon the contaminant that the samples will be analyzed for.

Questions/Comments

- EPA policy should be checked; who should take the lead on this site (EPA or NYSDEC)? Since the FTA and the 2 landfills from the Phase I investigation are under DOL litigation, it likely should be a DEC lead.

- the EPA will soon be sent the entire QA Plan by the contractor. Although our review depends somewhat on an answer to the above question, is a 'short form' required and can EPA get quick turnaround on a QA review?

- Suffolk County raised a good question of what happens if negative results are obtained from the monitoring wells. Although the plan is set up so that if a contaminant is present in the GW, additional wells will be installed further out, there is no recommendation for further investigation if no contaminants are found during this first phase. This means that a plume may have traveled past the first phase wells and will not be discovered (altho interferences, especially from the nearby Town Landfill, would be a problem).

- NY State raised the question of what is to be done with the potentially contaminated spoils resulting from the investigation. The contractor will look into this.

13NOV1986
1000hrs

PHASE II/IIA WORK PLAN BRIEFING
ATTENDEES

NAME	ORG.	ADDRESS	PHONE	REQ. MIN. CONV
WILLIAM OWENS	ORNL	P.O. BOX Y, OAKRIDGE, TN 37830	615-576-1597	X
ARTHUR LEE	ANGSC/DEV	MS 18 Andrews AFB, MD. 20331-6008	(301) 981-2463	X
WILLIAM R FISHER	E.C. JORDAN	PORTLAND, ME	207-775-5401	X
Ronald Lewis	E.C. JORDAN	"	"	No
JOSEPH LATRENTA	FIRPOS / HONEYWELL		288-3600	
CAPT CHARLES HOWELL	HQ USAF/LEEV	BOLLING AFB DC 20332	(202) 767-4156	No
LTC MICHAEL C WASHELESKI	ANGSC/SGD	Andrews AFB MD 20331	(301) 981-5926	Yes
LAINE VIGNONA	NYS-LAW DEPT	120 Broadway, NYC	212 341-2480	Yes
Chris Magee	NYSDEC Reg 1	Bldg 40 S.U.N.Y. Stony Brook	516-751-7900	
Tony Candela	" "	" "	" "	
Warren Black	U.S. EPA (Fed. Act. Sec.)	26 Federal Plaza, NY, NY 10278	(212) 264-539	
GERALD DEGAETANO	USEPA - ZERRD	"	" (212) 264-4595	
FRANK ESPOSITO	HQ USAF/JACE	528 TITLE BLDG 30 PRYOR ST ATLANTA GA 30303	404-331-0049	
James H. Pim	Suff. Co. Dept. of Health	15 Horseblock Pl., Farmingville NY 11738	516-451-4634	
Sy Robbins	Suffolk County Dept. of Health Services	225 Rabro Dr. East, Hauppauge, N.Y. 11788	(516) 348-2896	
BRIAN McCAFFREY	Suffolk County Dept of Law	158 N. County Complex Hauppauge NY 11788	516-360-4054	
TONY VASELL	106 TAC CLINIC/SGPB	SCANG BASE WHB NY 11978	516-288-4200 ext 249	
GERALD W. HARRIS	ICE ARRG/DE	" "	"	ext 23

NAME	ORGANIZATION	PHONE
Christopher Magee	NYSDEC Reg 1	516-751-7900
*Tony Candela	" "	" "
Gerry DeGaetano	USEPA	(212) 264-4595
Nancy Sorkin	NYS Dept of Law	212 341 2453
*Norman Spiegel	NYSDOL	212 341 2454
Tony Vasell TSgT	106 TAC CLINIC/SGPB	516 288-4200 EXT 248
Michael C Wachelski DC	ANGSC/SGB	(301) 981-5926
*Warren Black	US EPA (Federal Activities Sec)	212-264-5394
George "Bunker" Henderson	U.S. Dept of Justice	202-633-2327
RICHARD C. TUCKER	DAMES & MOORE	301-652-2215
BILL OWENS	ORNL-MARTIN MARIETTA	615-576-1597
GRACE WOOD	DAMES & MOORE	301-652-2215
Col. John H. FENIMORE V	106ARRG/CC	(516) 288-4200
*ARTHUR LEE	ANGSC/DEV	(301) 981-2463
GERALD W. HARRIS	106ARRG/DE	(AV) 458-7235 (516) 288-4200 x235
FRANK ESPOSITO	HQ USAF/JACE	404 331 0049
*James Pirro	Suffolk Co. Dept of Health Serv.	516 451-4634
Sy Robbins	Suffolk Co. Dept. of Health Services	(516) 348-2896

ATTACHMENT NO. 2

WORK PLAN BRIEFING MEETING

November 13, 1986

Phase II/IVA RAP Work Plan Briefing

For The Fire Training Area At Suffolk County Airport

AGENDA

- Welcome and Comments — USANG
- Project Overview — ORNL
- Briefing — Phase II/IVA Work Plan
  — E. C. Jordan Co.
- Receive Comments and Recommendations
  — ORNL

MEETING PURPOSE

Provide a briefing and opportunity to comment on the Phase II/IVA Work Plan for the IRP FTA Project

MEETING FORMAT

Overview

- Describe the general project situation
- Describe the project and the players

Project Briefing

- General description of project tasks
- Specific description of the Site Characterization task

Present Comments and Recommendations

Other Issues

INSTALLATION RESTORATION PROGRAM
OUTLINE

OBJECTIVE: To identify the locations and contents of past disposal sites and to eliminate the hazards to public health in an environmentally responsible manner.

PHASE I: To conduct a records search and interviews to identify and assess past disposal sites.

PHASE II: To confirm the presence or absence of contamination, determine the extent and degree of contamination, and to decide upon a level of appropriate action required.

PHASE III: To implement the development of technology for assessing and remediating hazardous wastes and waste sites.

PHASE IV:
- A: To select and prepare a Remedial Action Plan for site remediation.
- B: To implement planned control measures for remediating hazardous waste sites.

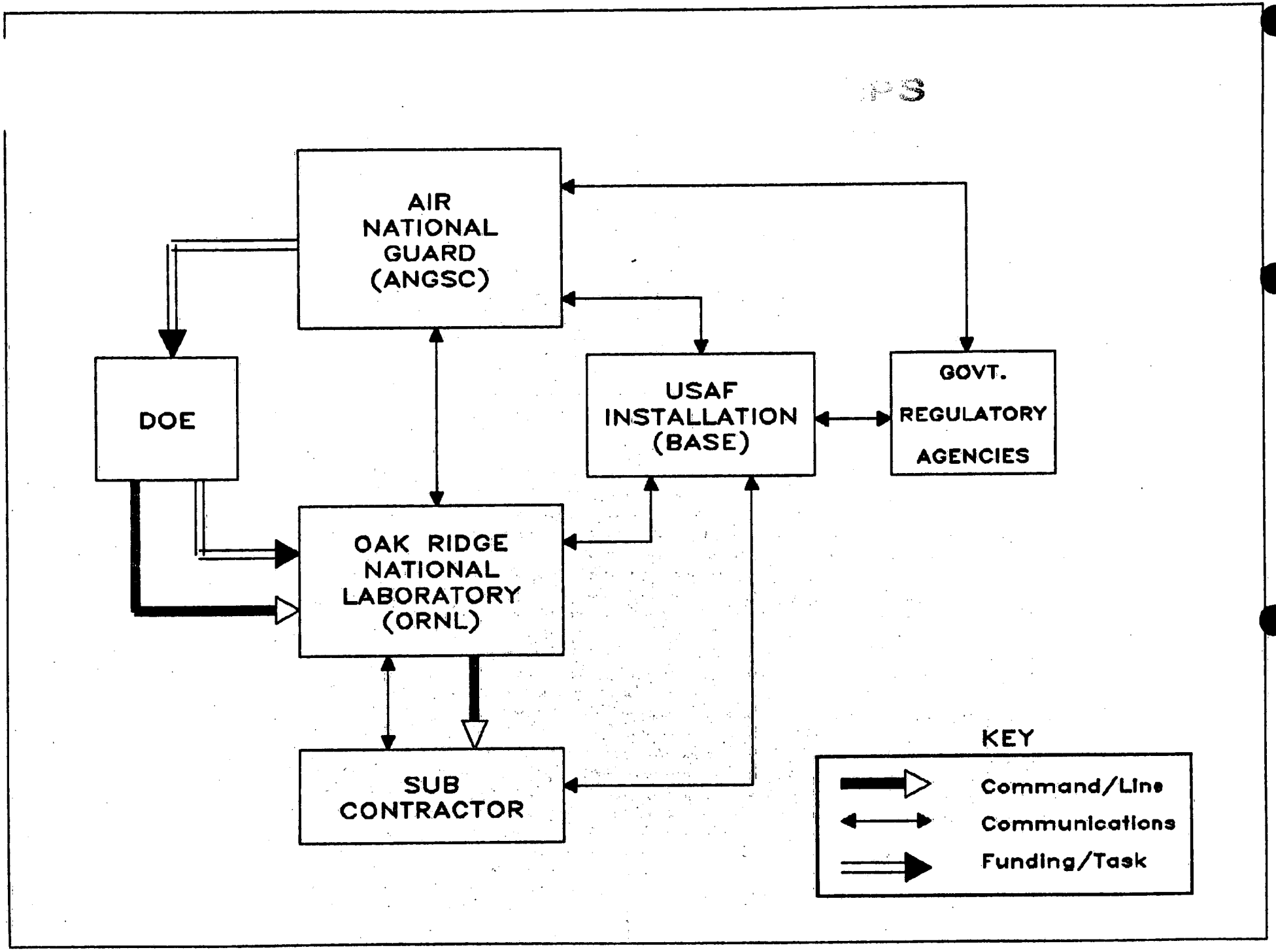
AIR NATIONAL GUARD (ANGSC)
DOE
USAF INSTALLATION (BASE)
GOVT. REGULATORY AGENCIES
OAK RIDGE NATIONAL LABORATORY (ORNL)
SUB CONTRACTOR
KEY
Command/Line
Communications
Funding/Task

PROJECTS AND PLAYERS

PROJECTS	Phase I Records Search	PHASE II/IVA RAP	OTHERS
Sponsor	USAF (LEEV)	USANG (ANGSC)	—
Contractor	ORNL	ORNL	—
Subcontractor	Dames & Moore	E. C. Jordan Co.	—
Objective	Conduct Records Search for Two Landfill Areas	Conduct FTA Site Characterization and Prepare a Remedial Action Plan Based Upon Findings	—

PROJECT ELEMENTS

- Acquire additional data necessary for preparing a RAP for the Suffolk County Airport Fire Training Area.
- Select and describe a remedial action appropriate for mitigating confirmed environmental contamination.
- Prepare a RAP that will provide data necessary to proceed with the design and implementation of the selected RA.
- Prepare design specifications, as directed by ANGSC, for the selected RA.

PROJECT APPROACH

- The Project will be contracted, and performed in steps.
  - Prepare for and attend preperformance meeting.
  - Prepare a work plan for the project (Task 1).
  - Conduct site characterization work (Task 2). — start mid-Jan. if insurance are received.
  - Select the most appropriate Remedial Actionand provide supporting documentation (Tasks 3–6).
  - Prepare the Remedial Action Plan (Tasks 7–10).
  - Prepare design plans and specifications for the Remedial Action (Task 12).

SUFFOLK FTA Phase II/IV-A Project Tasks

Task No.	Task Description	Deliverable	Meeting
1	Work Plan Preparation	TR-1 Work Plan	Gen.
2A	Site Characterization	TR-2A SC Report	Gen.
2B	Screen Control Measures	TR-2B SCM Report	—
3	Develop Detailed Alternatives	TR-3 DDA Report	Int.
4	Evaluate Detailed Alternatives	TR-4 ESA Report	—
5	Describe Selected Alternative	TR-5 DSA Report	—
6	Prepare Environmental Assessments	TR-6 EA Report	—
7	Prepare Peer Review Draft RAP	TR-7 Peer Review Draft RAP Report	Int.
8	Prepare Preliminary Draft RAP	TR-8 Preliminary Draft RAP	Gen.
9	Prepare Draft RAP	TR-9 Draft RAP	AFIRM
10	Attend Public Hearings & Prepare Final RAP	TR-10 Final RAP Report	Gen.
11	Project Coordination	Monthly Reports	—
12 *	Prepare Design Specifications	Design Specifications	Gen.
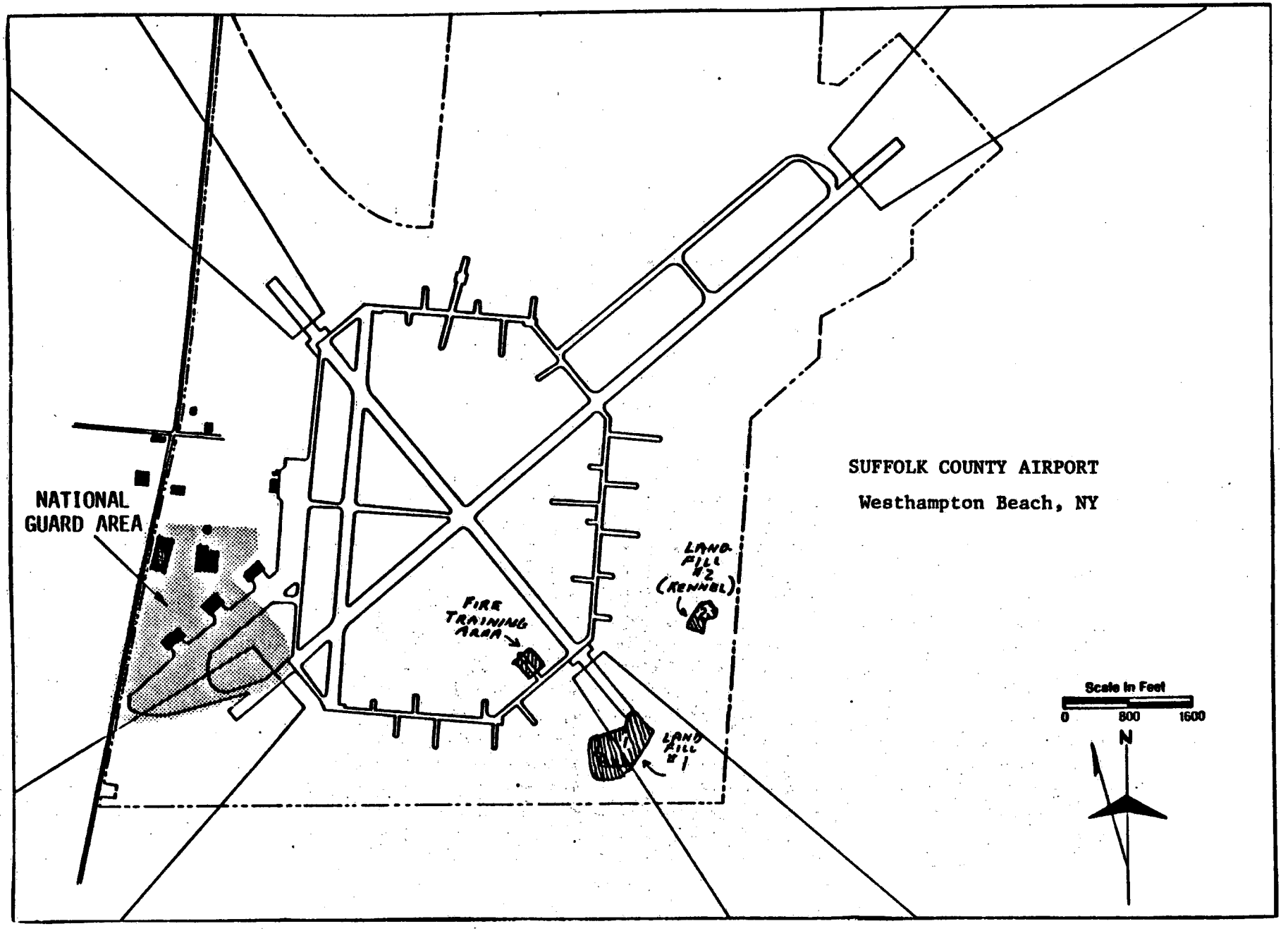
ATTACHMENT NO. 2 (CONTINUED)