US Army Corps
of Engineers
Kansas City District
Leaders in Customer Care

Plattsburgh Air Force Base Plattsburgh, New York

204349

Specifications for

Landfill No. 023 Closure

Appendices

Volume II of II

August 1992

MALCOLM PIRNIE

Printed on Recycled Paper

Specifications for
Plattsburgh Air Force Base
Landfill No. 023 Closure

Volume II of II

APPENDIX	CONTENTS
A	Obstacle Course: PAFB Sketches
B	Obstacle Course: Photographs
C	Boring Logs
D	Test Pit Logs
E	Baseline Risk Assessment (Final RI, February 1992)
F	NYSDEC Memorandum: Fugitive Dust Suppression and Particulate Monitoring Program at Inactive Hazardous Waste Sites

APPENDIX A

OBSTACLE COURSE: PAFB SKETCHES

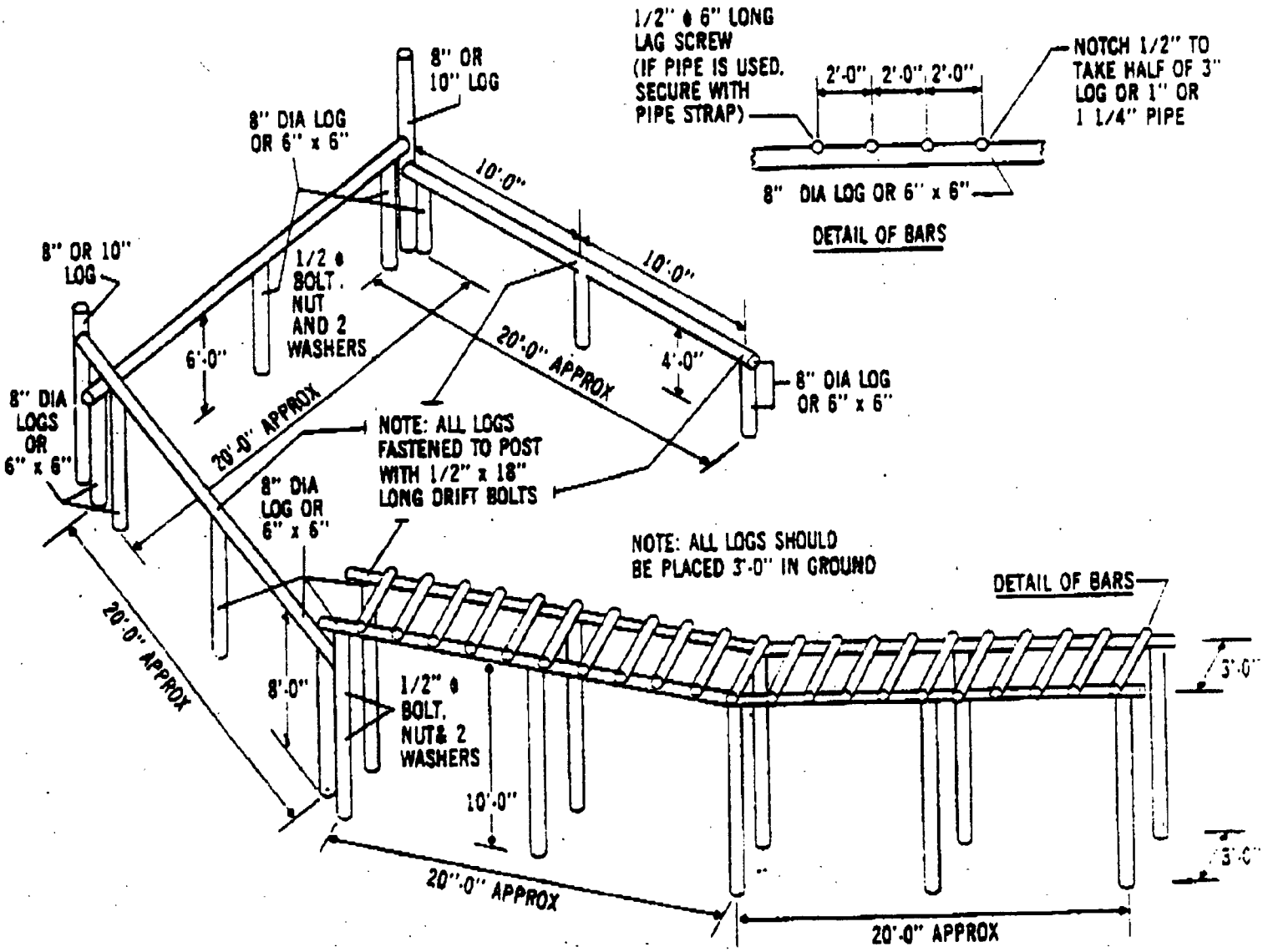

THE TARZAN

OBSTACLE 1

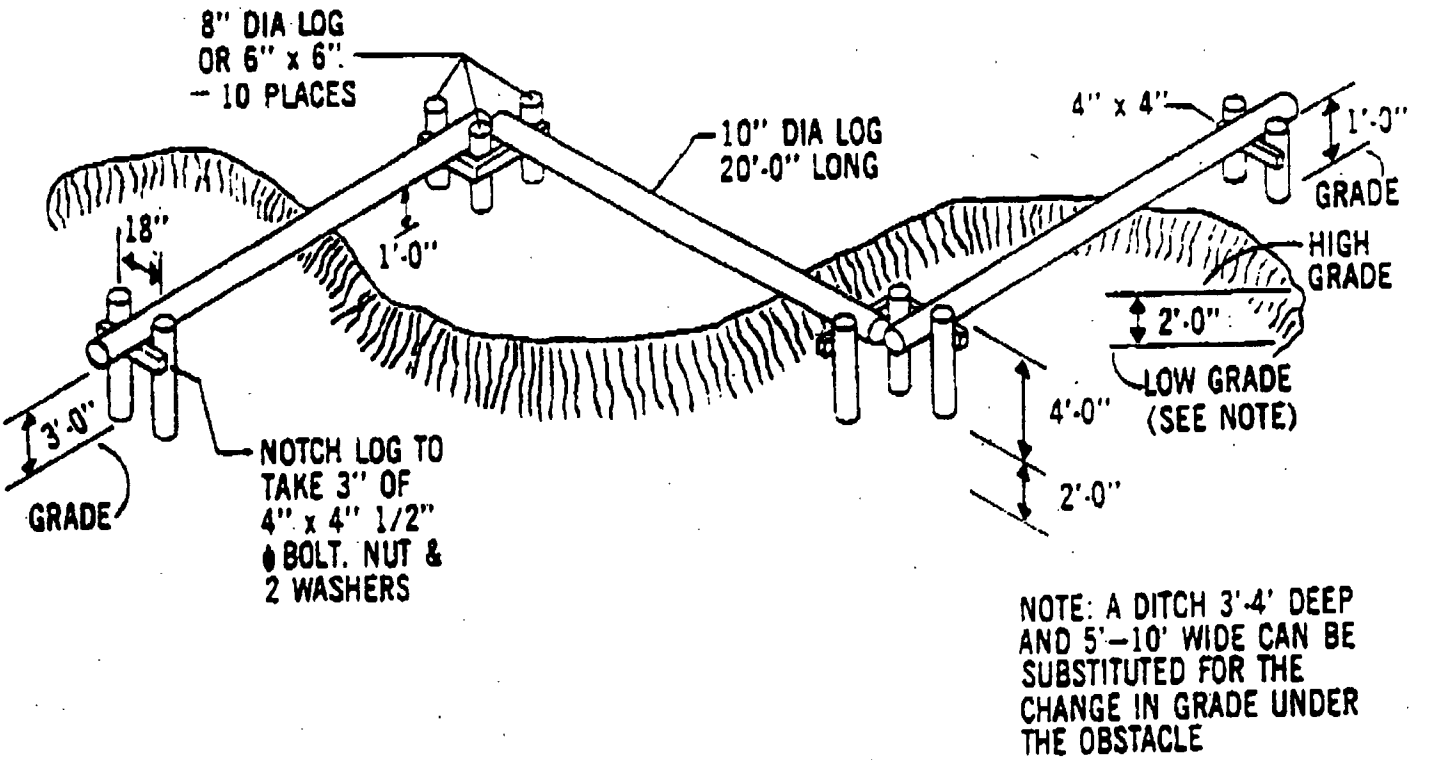

NOTE: A DITCH 3'-4' DEEP AND 5'–10' WIDE CAN BE SUBSTITUTED FOR THE CHANGE IN GRADE UNDER THE OBSTACLE

BALANCING LOGS

OBSTACLE 2

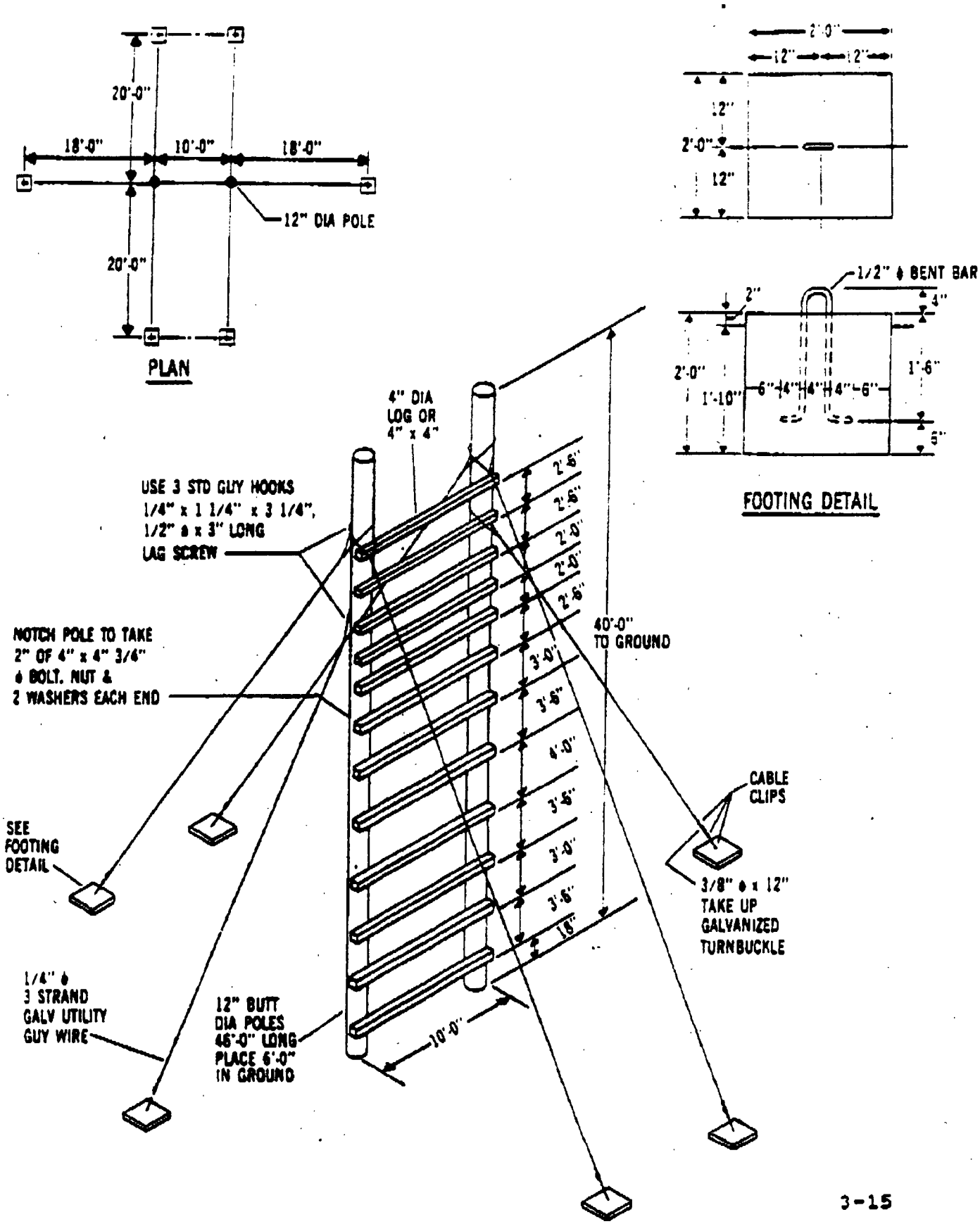

CONFIDENCE CLIMB

OBSTACLE 3

NO SKETCH AVAILABLE

OBSTACLE 4

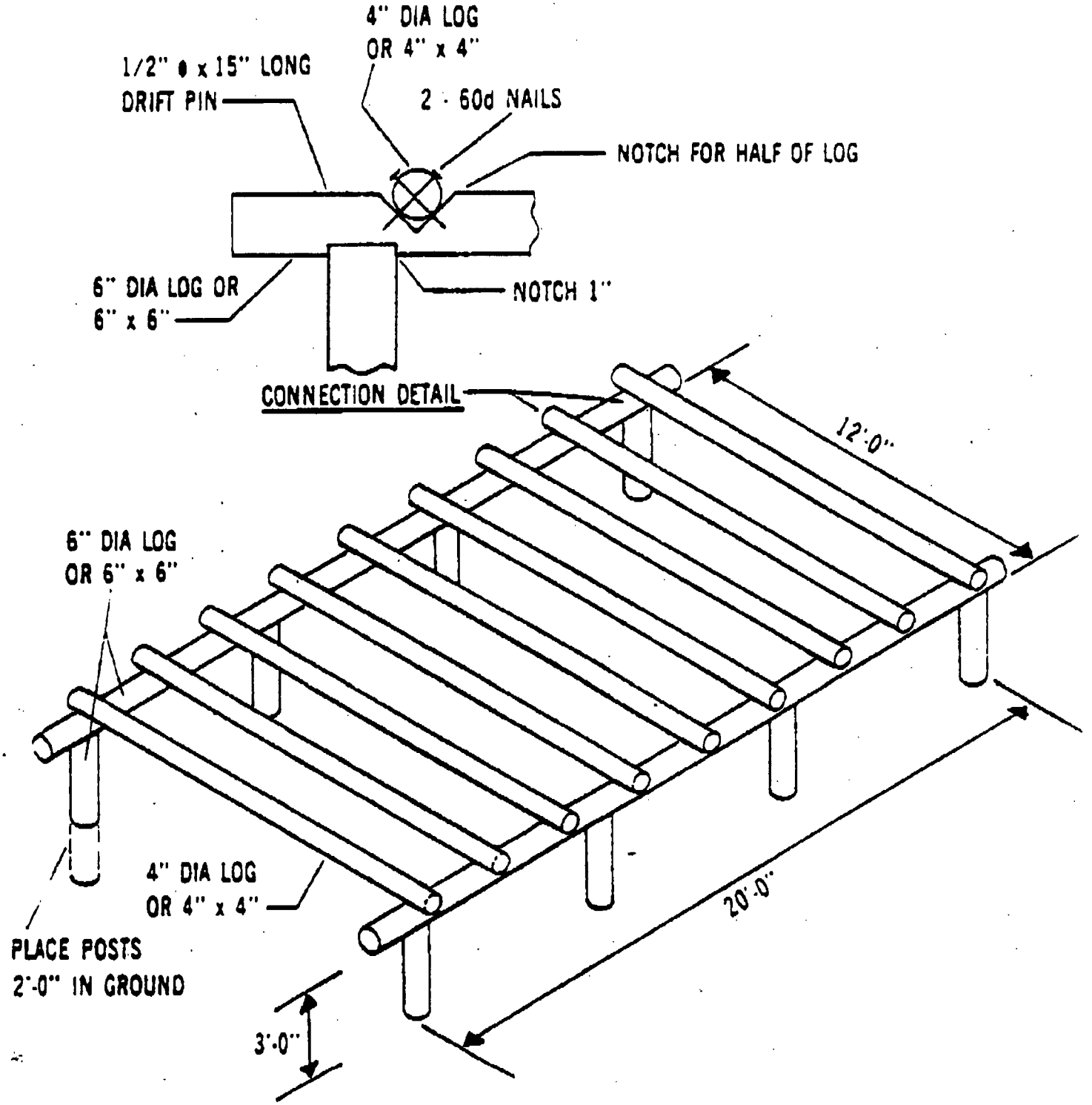

HIGH STEP OVER
OBSTACLE 5

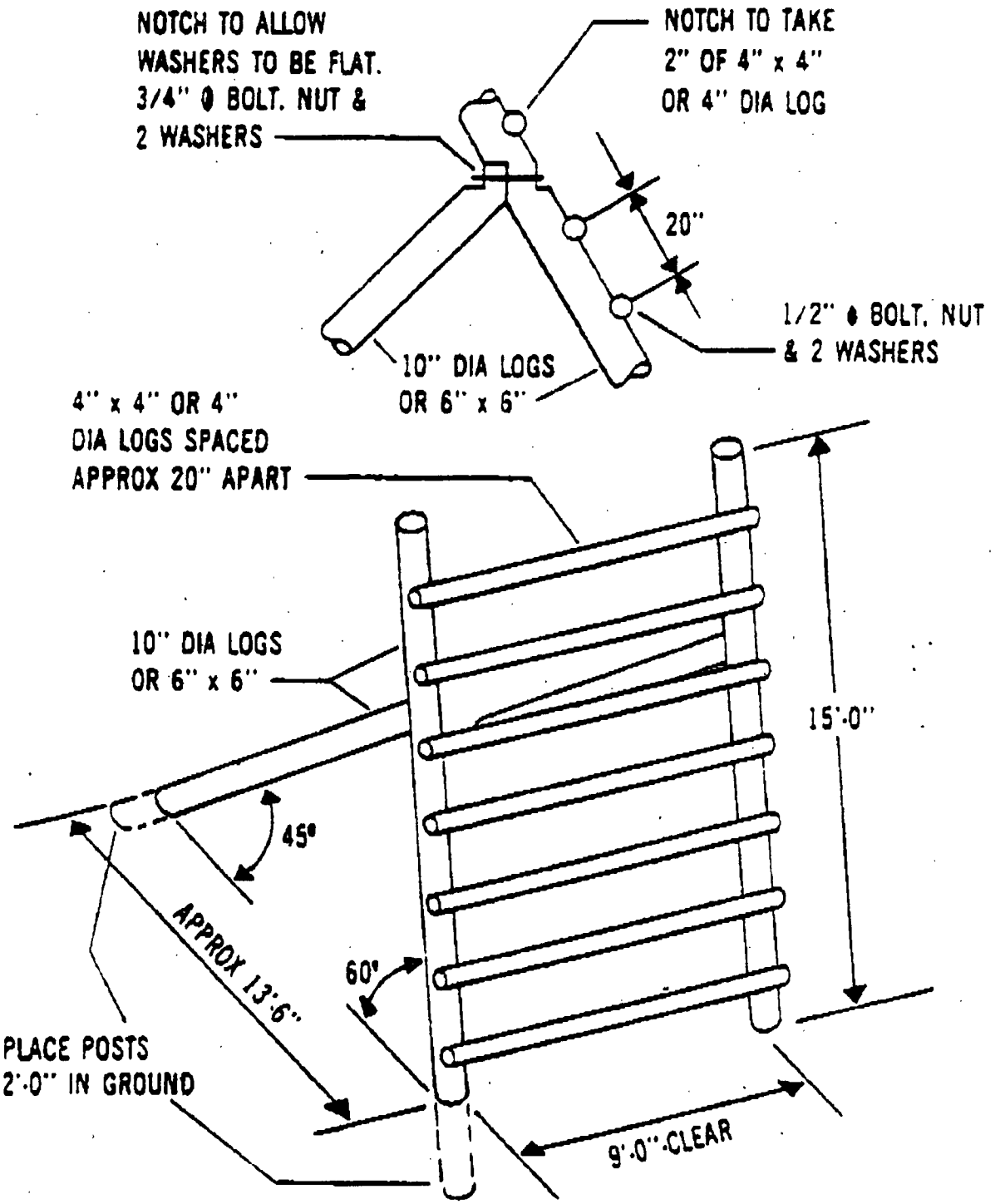

REVERSE CLIMB

OBSTACLE 6

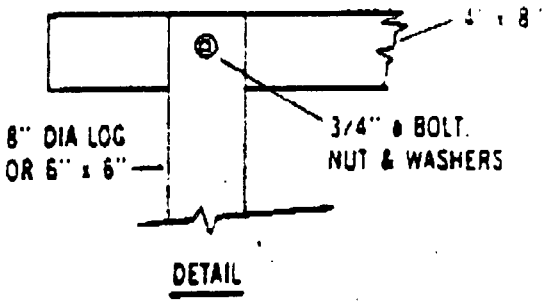

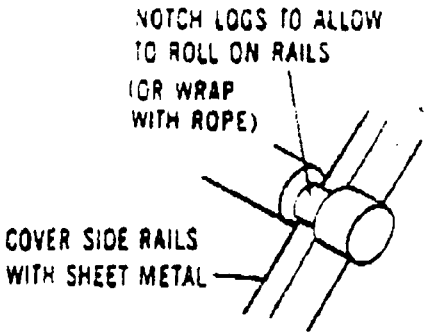

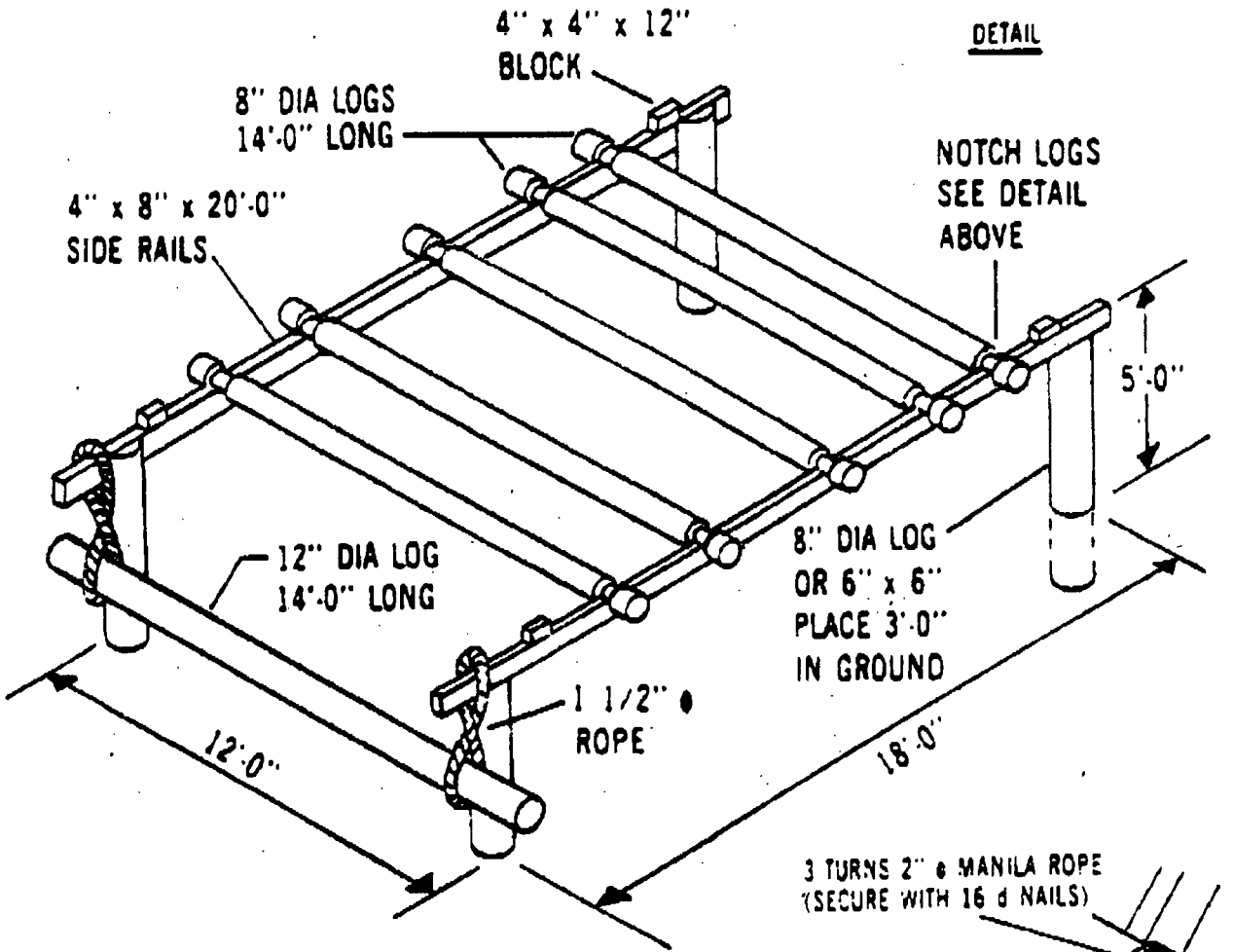

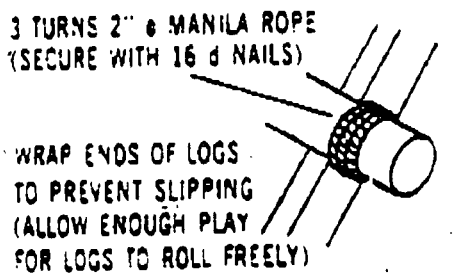

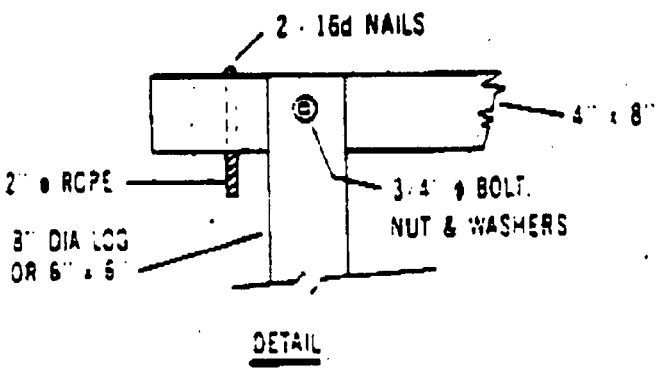

BELLY ROBBER

OBSTACLE 7

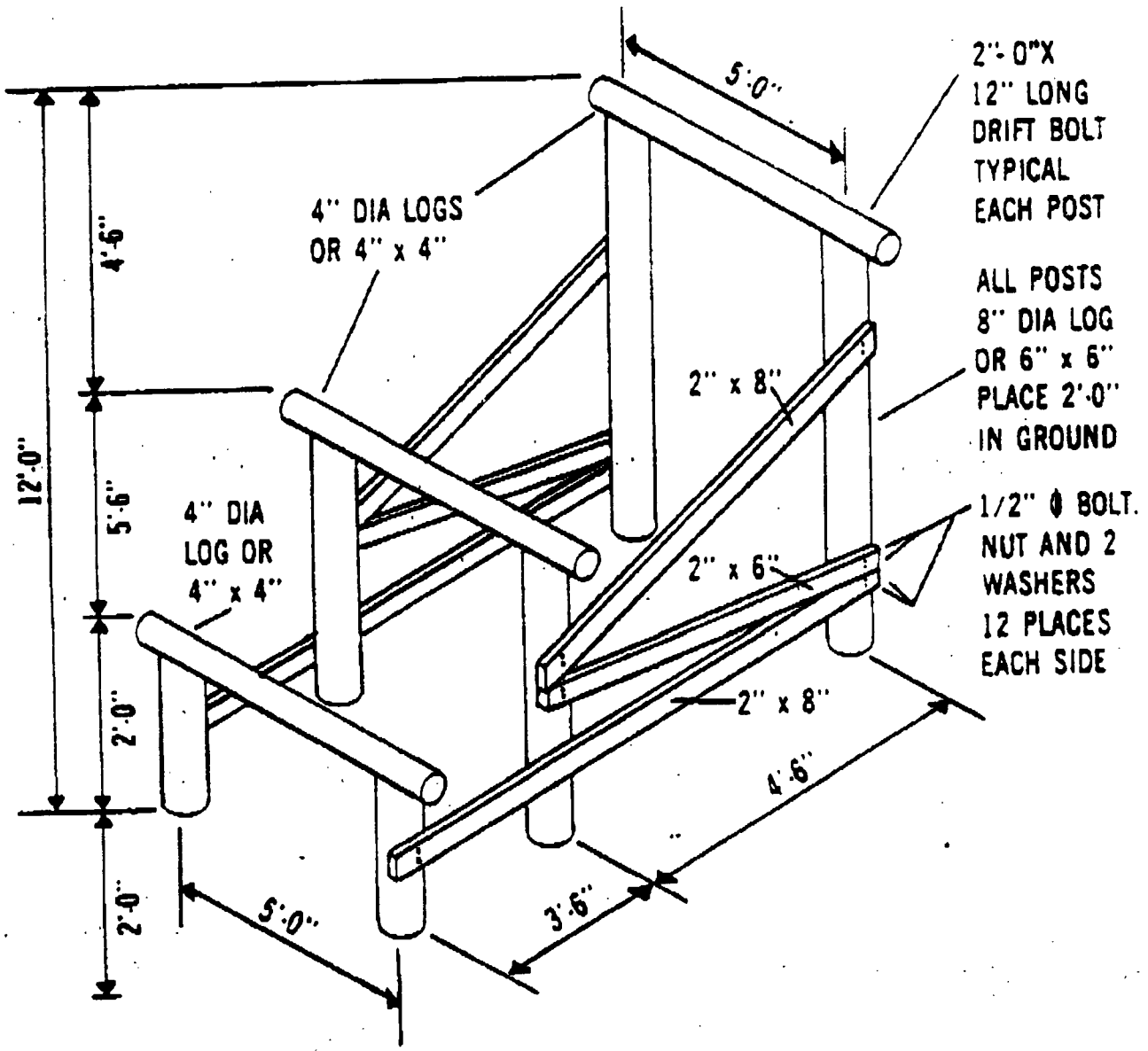

THE DIRTY NAME

3-5

OBSTACLE 8

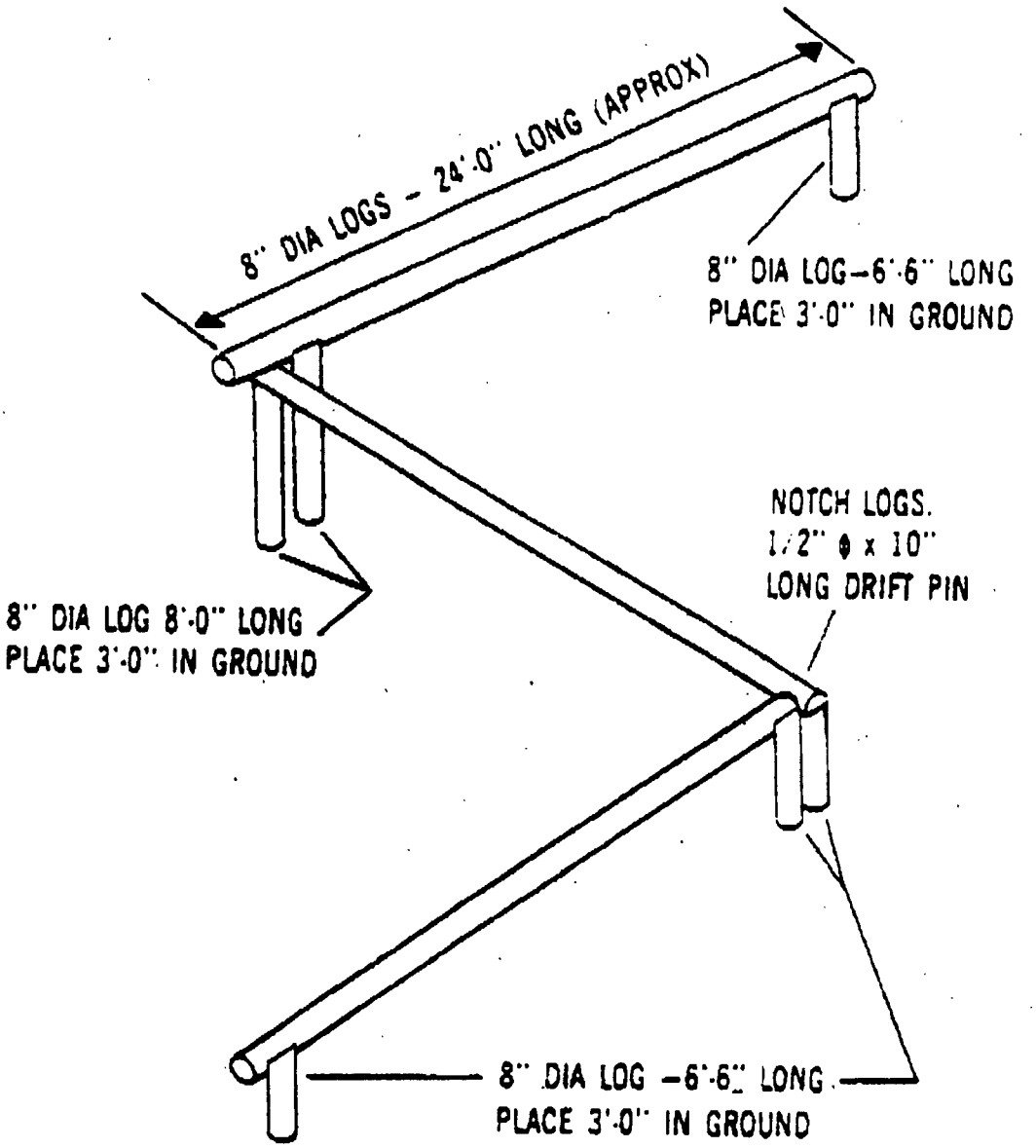

WALK ACROSS

OBSTACLE 9

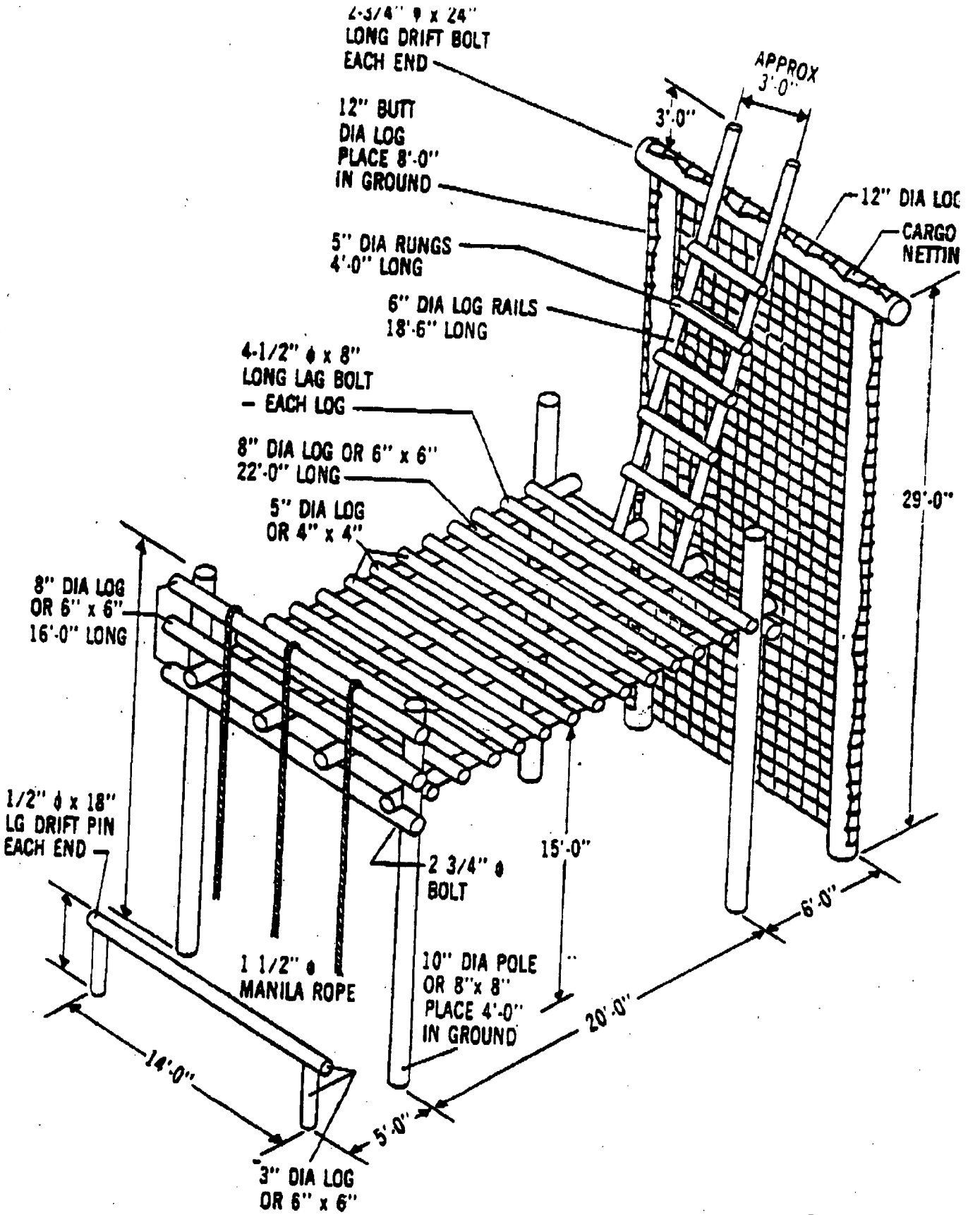

3-1

TOUGH ONE

OBSTACLE 10

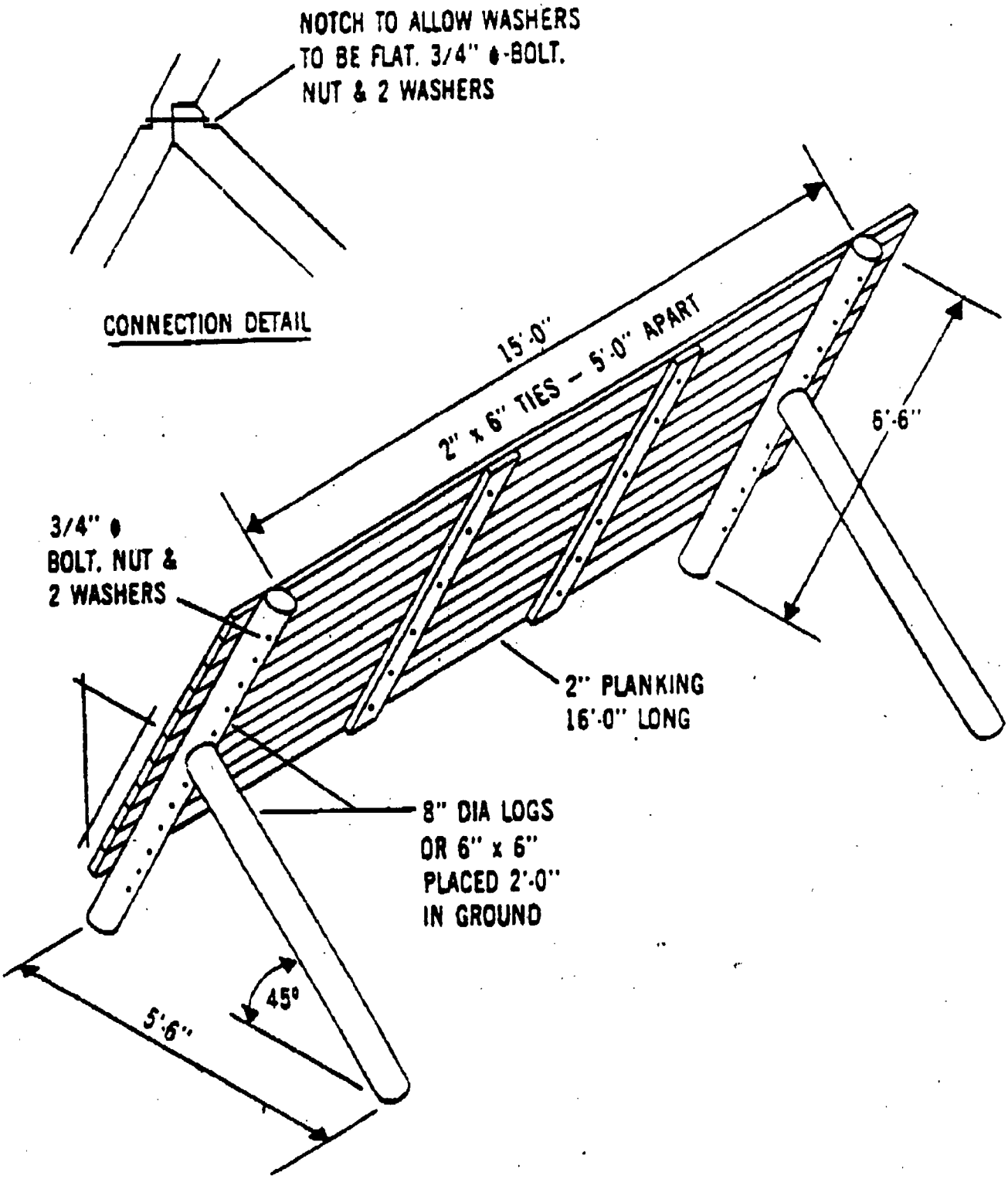

INCLINING WALL

OBSTACLE 11

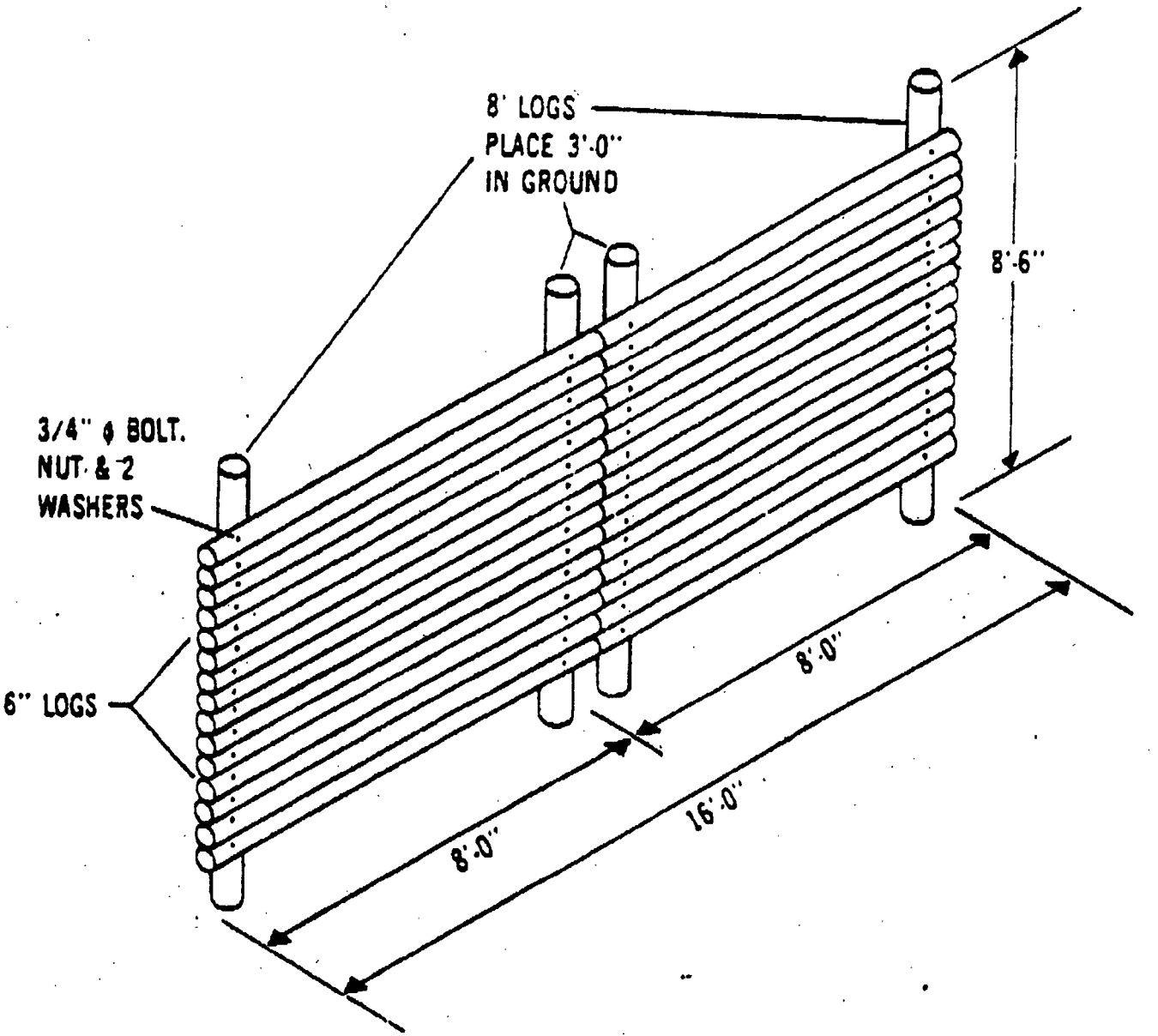

VERTICAL WALL

OBSTACLE 12

APPENDIX B

OBSTACLE COURSE: PHOTOS

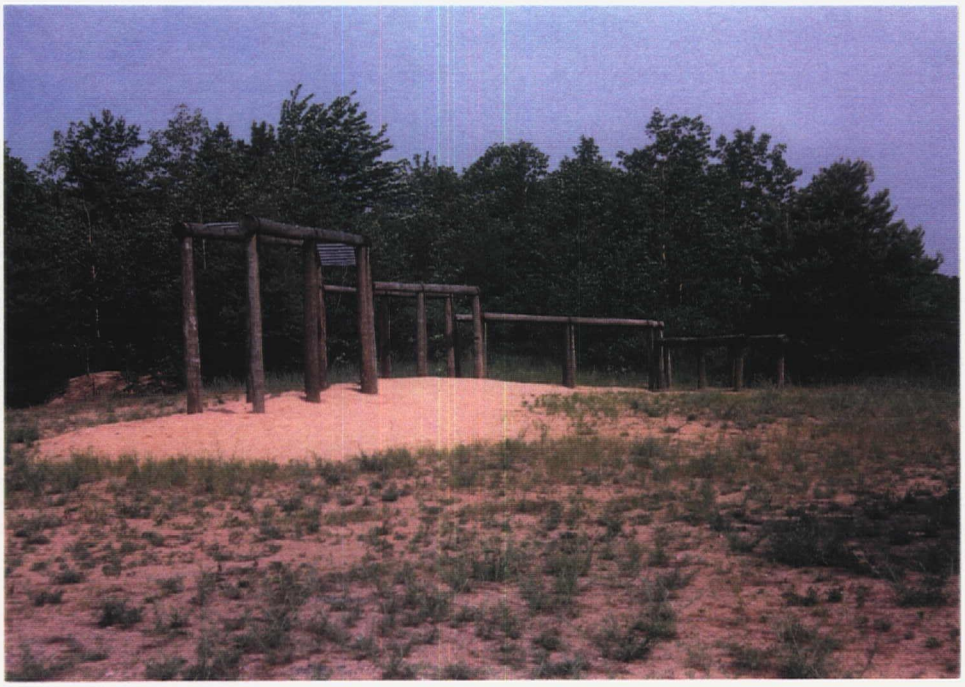

OBSTACLE - 1

OBSTACLES - 2 (foreground) AND 3 (background)

OBSTACLE - 4

OBSTACLE - 5

OBSTACLE - 6

OBSTACLE - 7

OBSTACLE - 8

OBSTACLE - 9

OBSTACLE - 10

OBSTACLE - 11

OBSTACLE - 12

APPENDIX C

BORING LOGS

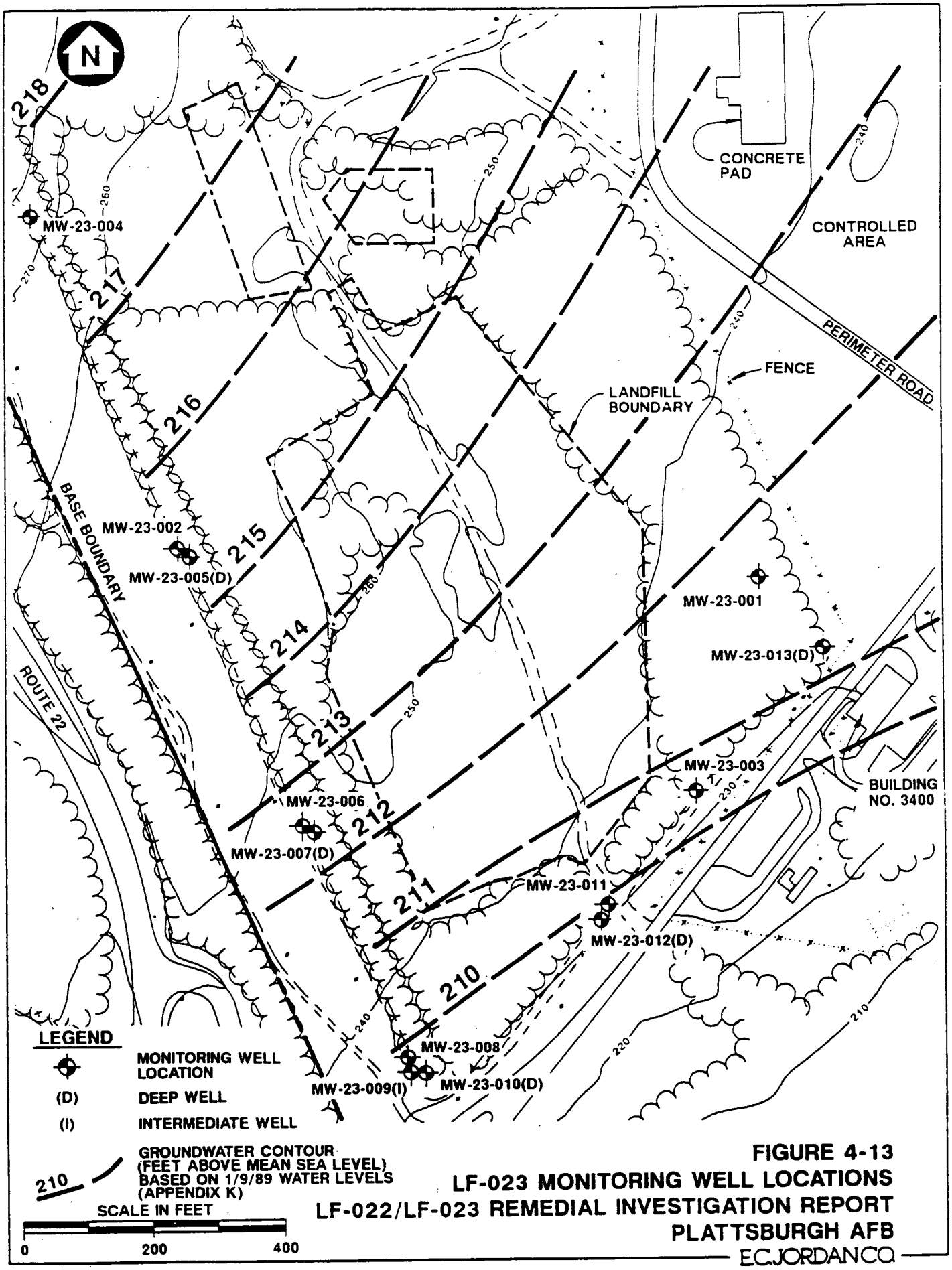

FIGURE 4-13
LF-023 MONITORING WELL LOCATIONS
LF-022/LF-023 REMEDIAL INVESTIGATION REPORT
PLATTSBURGH AFB

E.C. JORDAN CO.

6091-10

PLATTSBURGH AIR FORCE BASE

BORING NO. MW-23-001

CLIENT ORNL/SAC			PROJECT NO. 5329-04
CONTRACTOR LAYNE-NORTHERN CO.		DATE STARTED 11/6/87	COMPLTD. 11/7/87
METHOD HSA	CASING SIZE 4 1/4" ID	PID 10.6	PROTECTION LEVEL D
GROUND EL 232.9	SOIL DRILLED 27'	ROCK DRILLED NA	▽ BELOW GROUND 18'
LOGGED BY SJS	CHECKED BY JWP	DATE 3/88	SITE D-4

DEPTH (FT)	PID AMB. AIR	SAMP NO. & TYPE NO.	SAMPLE	RECOVERY	CLP	PID HEADSPACE (ppm)	SOIL/ROCK DESCRIPTION	LITHOLOGIC SYMBOL	SOIL CLASS	BLOWS/6-IN RQD % (20 40 60 80 100)	WELL DATA	EL. (FT)
	BKG	S-1	X	1.8		BKG	SAND Dark brown, fine to med w/ some coarse sand and organics; very loose to loose; moist; poorly graded		SP	1 3 3 6		
5	BKG	S-2	X	1.8		BKG	Tan; fine to very fine; poorly graded; mottling; loose; moist; occasional thin silt layers		SP	1 4 5 8		
10	BKG	S-3	X	1.5		BKG	0.2' silt layer		SP/SM	4 4 8 9		
15	BKG	S-4	X	1.5		BKG	Thin fine sand layers		SP	2 8 8 8		▽
20												

* U= THIN WALL S= SPLIT SPOON R= ROCK

E.C. JORDAN CO.

PLATTSBURGH AIR FORCE BASE

BORING NO MW-23-001

CLIENT ORNL/SAC			PROJECT NO. 5329-04
CONTRACTOR LAYNE-NORTHERN CO.		DATE STARTED 11/6/87	COMPLTD. 11/7/87
METHOD HSA	CASING SIZE 4 1/4" ID	PID 10.6	PROTECTION LEVEL D
GROUND EL 232.85	SOIL DRILLED 27'	ROCK DRILLED NA	▽ BELOW GROUND 18'
LOGGED BY SS	CHECKED BY JWP	DATE 3/88	SITE D-4

DEPTH (FT)	PID AMB. AIR	SAMP NO. & TYPE NO.	SAMPLE RECOVERY	CLP	PID HEADSPACE (ppm)	SOIL/ROCK DESCRIPTION	LITHOLOGIC SYMBOL	SOIL CLASS	BLOWS/6-IN RQD % (20 40 60 80 100)	WELL DATA	EL. (FT)
	BKG	S-5	1.5		BKG	SAND Tan; fine grading to silty sand w/ 0.3' silt layer in S-5; mottling; med. dense; wet		SP	4 8 14 10		
25	BKG	S-6	1.8		BKG	Tan; fine to med. grading to fine; loose; wet		SP	1 4 8 13		
						BOB - 27'					
30											
35											
40											

* U= THIN WALL S= SPLIT SPOON R= ROCK

E.C. JORDAN CO.

PLATTSBURGH AIR FORCE BASE

BORING NO. MW-23-002

CLIENT ORNL/SAC			PROJECT NO. 5329-04
CONTRACTOR LAYNE-NORTHERN CO.		DATE STARTED 11/6/87	COMPLTD. 11/6/87
METHOD HSA	CASING SIZE 4 1/4" ID	PID 10.6	PROTECTION LEVEL D
GROUND EL 251.9	SOIL DRILLED 45.3'	ROCK DRILLED NA	▽ BELOW GROUND 36'
LOGGED BY SJS	CHECKED BY JWP	DATE 3/88	SITE D-4

DEPTH (FT)	PID AMB. AIR	SAMP NO. & TYPE NO.	SAMPLE	RECOVERY	CLP	PID HEADSPACE (ppm)	SOIL/ROCK DESCRIPTION	LITHOLOGIC SYMBOL	SOIL CLASS	BLOWS/6-IN RQD % (20 40 60 80 100)	WELL DATA	EL. (FT)
	BKG	S-1	X	1.5		BKG	SAND Tan; fine w/ trace med and coarse, little fine gravel; some organics; loose; moist.		SP	1 2 5 5		
5	BKG	S-2	X	1.5		BKG	Tan; fine; very fine, and silty sand; trace coarse sand; loose; moist		SP/SM	1 5 5 16		
10	BKG	S-3	X	1.5		BKG	Tan; fine to very fine, with little to trace med; occasional silt lenses; some mottling; moist; loose to med. dense; well sorted		SP	5 7 11 13		
15	BKG	S-4	X	1.8		BKG			SP	5 6 11 11		
20												

* U= THIN WALL S= SPLIT SPOON R= ROCK

E.C. JORDAN CO.

PLATTSBURGH AIR FORCE BASE

BORING NO. MW-23-002

CLIENT ORNL/SAC			PROJECT NO. 5329-04
CONTRACTOR LAYNE-NORTHERN CO.		DATE STARTED 11/6/87	COMPLTD. 11/6/87
METHOD HSA	CASING SIZE 4 1/4" ID	PID 10.6	PROTECTION LEVEL D
GROUND EL 251.9	SOIL DRILLED 45.3	ROCK DRILLED NA	▽ BELOW GROUND 36'
LOGGED BY SJS	CHECKED BY JWP	DATE 3/88	SITE D-4

DEPTH (FT)	PID AMB. AIR	SAMP NO. & TYPE NO.	SAMPLE RECOVERY	CLP PID HEADSPACE (ppm)	SOIL/ROCK DESCRIPTION	LITHOLOGIC SYMBOL	SOIL CLASS	BLOWS/6-IN RQD % (20 40 60 80 100)	WELL DATA	EL. (FT)
	BKG	S-5	1.8	BKG	SAND Tan; fine to very fine, with trace medium, occasional silt lenses; well sorted; loose to med dense; moist to wet.		SP	1 6 8 8		
25	BKG	S-6	1.8	BKG			SP	4 9 11 11		
30	BKG	S-7	1.8	BKG			SP	4 6 14 16		
35	BKG	S-8	1.8	BKG			SP	3 5 7 6		▽
40										

* U= THIN WALL S= SPLIT SPOON R= ROCK

PLATTSBURGH AIR FORCE BASE

BORING NO. MW-23-002

CLIENT ORNL/SAC			PROJECT NO. 5329-04
CONTRACTOR LAYNE-NORTHERN CO.		DATE STARTED 11/6/87	COMPLTD. 11/6/87
METHOD HSA	CASING SIZE 4 1/4" ID	PID 10.6	PROTECTION LEVEL D
GROUND EL 251.9	SOIL DRILLED 45.3'	ROCK DRILLED NA	▽ BELOW GROUND 36'
LOGGED BY SJS	CHECKED BY JWP	DATE 3/88	SITE D-4

DEPTH (FT)	PID AMB. AIR	SAMP NO. & TYPE NO.	SAMPLE	RECOVERY	CLP	PID HEADSPACE (ppm)	SOIL/ROCK DESCRIPTION	LITHOLOGIC SYMBOL	SOIL CLASS	BLOWS/6-IN RQD % (20 40 60 80 100)	WELL DATA	EL. (FT)
	BKG	S-9		2.0		BKG	SAND Tan; fine to very fine, well sorted with occasional silt and silty sand layers; loose to med. dense; wet.		SP	3 6 9 20		
45									SP	4 6 7 8		
	BKG	S-10		1.8		BKG					CAVE	
							BOB - 47.0'					
50												

* U= THIN WALL S= SPLIT SPOON R= ROCK

E.C. JORDAN CO.

PLATTSBURGH AIR FORCE BASE

BORING NO. MW-23-003

CLIENT ORNL/SAC			PROJECT NO. 5329-04
CONTRACTOR LAYNE-NORTHERN CO.		DATE STARTED 11/5/87	COMPLTD. 11/6/87
METHOD HSA	CASING SIZE 4 1/4" ID	PID 10.6	PROTECTION LEVEL D
GROUND EL 231.2	SOIL DRILLED 30	ROCK DRILLED NA	▽ BELOW GROUND 19.5'
LOGGED BY SJS	CHECKED BY JWP	DATE 3/88	SITE D-4

DEPTH (FT)	PID AMB. AIR	SAMP NO. & TYPE NO.	SAMPLE RECOVERY	CLP	PID HEADSPACE (ppm)	SOIL/ROCK DESCRIPTION	LITHOLOGIC SYMBOL	SOIL CLASS	BLOWS/6-IN. RQD % (20 40 60 80 100)	WELL DATA	EL. (FT)
	BKG	S-1	1.5		10.3	SAND Tan w/ some Brown near surface, fine sand w/ trace med.		SP	1 2 3 4		
5	BKG	S-2	1.8		21.0	Tan, fine sand with silt and silty sand, grading to fine sand, med dense, moist		SP/SM	3 5 7 9		
10	BKG	S-3	1.8		84.0	Tan, fine to med., mottling, med. dense, moist, well sorted		SP	3 9 11 15		
15	BKG	S-4	1.8		48.0	Tan, fine sand to silty sand, occasional thin silt layer, mottling, med. dense		SP/SM	3 8 10 11		▽
20											

* U= THIN WALL S= SPLIT SPOON R= ROCK

E.C. JORDAN CO.

PLATTSBURGH AIR FORCE BASE

BORING NO. MW-23-003

CLIENT ORNL/SAC			PROJECT NO. 5329-04
CONTRACTOR LAYNE-NORTHERN CO.		DATE STARTED 11/5/87	COMPLTD. 11/6/87
METHOD HSA	CASING SIZE 4¼" ID	PID 10.6	PROTECTION LEVEL D
GROUND EL 231.2	SOIL DRILLED 30'	ROCK DRILLED NA	▽ BELOW GROUND 19.5'
LOGGED BY SS	CHECKED BY JWP	DATE 3/88	SITE D-4

DEPTH (FT)	PID AMB. AIR	SAMP NO. & TYPE NO.	SAMPLE	RECOVERY	CLP	PID HEADSPACE (ppm)	SOIL/ROCK DESCRIPTION	LITHOLOGIC SYMBOL	SOIL CLASS	BLOWS/6-IN RQD % (20 40 60 80 100)	WELL DATA	EL. (FT)
20	BKG	S-5	X	1.8		9.2	SAND Tan grading to gray, v. fine to fine grading to fine to med., loose wet, well sorted		SP	3 4 4 6		
25	BKG	S-6	X	1.8		7.1	Gray, fine to v. fine, med. dense, wet, well sorted		SP	2 5 10 8		
30							BOB - 30'					

* U= THIN WALL S= SPLIT SPOON R= ROCK

E.C. JORDAN CO.

PLATTSBURGH AIR FORCE BASE

BORING NO. MW-23-004

CLIENT ORNL/SAC			PROJECT NO. 5329-09
CONTRACTOR LAYNE-NORTHERN CO.		DATE STARTED 7/7/88	COMPLTD. 7/9/88
METHOD HSA	CASING SIZE 4 1/4" ID	PID 10.6	PROTECTION LEVEL D
GROUND EL 271.4'	SOIL DRILLED 103'	ROCK DRILLED NA	▽ BELOW GROUND
LOGGED BY TWT	CHECKED BY JWP	DATE 8/88	SITE D-4

DEPTH (FT)	PID AMB. AIR	SAMP NO. & TYPE NO.	SAMPLE RECOVERY	CLP	PID HEADSPACE (ppm)	SOIL/ROCK DESCRIPTION	LITHOLOGIC SYMBOL	SOIL CLASS	BLOWS/6-IN RQD % (20 40 60 80 100)	WELL DATA	EL. (FT)
0	BKG	S-1	0.75		63	SAND Brown; fine to coarse, trace gravel; well-rounded, medium dense		SP	3 3 5 6		
						Change to tan color, no gravel			5 6 6 7		
5	BKG	S-2	1.5		BKG			SP			
10	BKG	S-3	2.0		BKG			SP	7 9 12 15		
15	BKG	S-4	2.0		BKG	Change to fine to medium grained, well-sorted sand; medium dense		SP	7 10 12 14		
20											

* U= THIN WALL S= SPLIT SPOON R= ROCK

E.C. JORDAN CO.

PLATTSBURGH AIR FORCE BASE

BORING NO. MW-23-00

CLIENT ORNL/SAC			PROJECT NO. 5329-09
CONTRACTOR LAYNE-NORTHERN CO.		DATE STARTED 7/7/88	COMPLTD. 7/9/88
METHOD HSA	CASING SIZE 4 1/4" ID	PID 10.6	PROTECTION LEVEL D
GROUND EL 271.4'	SOIL DRILLED 103'	ROCK DRILLED NA	▽ BELOW GROUND
LOGGED BY TWT	CHECKED BY JWP	DATE 8/88	SITE D-4

DEPTH (FT)	PID AMB. AIR	SAMP NO. & TYPE NO.	SAMPLE	RECOVERY	CLP	PID HEADSPACE (ppm)	SOIL/ROCK DESCRIPTION	LITHOLOGIC SYMBOL	SOIL CLASS	BLOWS/6-IN RQD % (20 40 60 80 100)	WELL DATA	EL. (FT)
20	BKG	S-5	X	1.8		BKG	SAND; tan, fine to medium; stratified in areas with very fine sand, dense		SP	5 7 9 11		
25	BKG	S-6	X	1.5		BKG	Same sand with some brown SILT, and rust-brown motteling, med dense		SP	6 7 8 10		
30	BKG	S-7	X	1.5		7.5	SAND; tan, distinct change at 30.6' to a coarse sand with gravel, med dense		SP	5 11 12 11		
35	BKG	S-8	X	2.0		BKG	SAND; tan, fine sand and medium sand interbedded, medium dense		SP	6 9 9 12		
40												

* U= THIN WALL S= SPLIT SPOON R= ROCK

E.C. JORDAN CO.

PLATTSBURGH AIR FORCE BASE

BORING NO. MW-23-004

CLIENT ORNL/SAC			PROJECT NO. 5329-09
CONTRACTOR LAYNE-NORTHERN CO.		DATE STARTED 7/7/88	COMPLTD. 7/9/88
METHOD HSA	CASING SIZE 4 1/4" ID	PID 10.6	PROTECTION LEVEL D
GROUND EL 271.4'	SOIL DRILLED 103'	ROCK DRILLED NA	▽ BELOW GROUND
LOGGED BY TWT	CHECKED BY JWP	DATE 8/88	SITE D - A

DEPTH (FT)	PID AMB. AIR	SAMP NO. & TYPE NO.	SAMPLE RECOVERY	CLP	PID HEADSPACE (ppm)	SOIL/ROCK DESCRIPTION	LITHOLOGIC SYMBOL	SOIL CLASS	BLOWS/6-IN RQD % (20 40 60 80 100)	WELL DATA	EL. (FT)
0	BKG	S-9	2.0		BKG	SAND; tan, fine sand to med sand interbedded, trace black motteling, med dense		SP	5 6 9 12		
45	BKG	S-10	2.0		BKG	Change to very fine sand, moist, some rust motteling		SP	4 5 6 8		
50	BKG	S-11	2.0		BKG			SP	6 9 10 12		
55	BKG	S-12	1.5		BKG	SAND; tan to brown, fine to very fine, some silt (10%), wet, med dense		SM	4 6 6		
60											

* U= THIN WALL S= SPLIT SPOON R= ROCK

E.C. JORDAN CO.

PLATTSBURGH AIR FORCE BASE

BORING NO. MW-23-00

CLIENT ORNL/SAC			PROJECT NO. 5329-09
CONTRACTOR LAYNE-NORTHERN CO.		DATE STARTED 7/7/88	COMPLTD. 7/9/88
METHOD HSA	CASING SIZE 4 1/4" ID	PID 10.6	PROTECTION LEVEL D
GROUND EL 271.4'	SOIL DRILLED 103'	ROCK DRILLED	▽ BELOW GROUND
LOGGED BY TWT	CHECKED BY JWP	DATE 8/88	SITE D-4

DEPTH (FT)	PID AMB. AIR	SAMP NO. & TYPE NO.	SAMPLE	RECOVERY	CLP	PID HEADSPACE (ppm)	SOIL/ROCK DESCRIPTION	LITHOLOGIC SYMBOL	SOIL CLASS	BLOWS/6-IN RQD % (20 40 60 80 100)	WELL DATA	EL. (FT)
60	BKG	S-13	X	2.0		BKG	SAND; tan, fine to medium, less well sorted, some thin, rusty mottled layers, med dense to loose		SP	2 2 3 6		
65	BKG	S-14	X	1.0					SP	5 10 15		
70	BKG	S-15	X	2.0		BKG	SAND; tan to brown, very fine sand, tr SILT, med dense to loose		SP	3 4 5 9		
75	BKG	S-16	X	2.0		BKG	SAND; becomes gray at 77.5 feet, very fine, tr SILT, some black motteling, loose		SP/SM	2 3 2 3		
80												

* U= THIN WALL S= SPLIT SPOON R= ROCK

E.C. JORDAN CO.

PLATTSBURGH AIR FORCE BASE

BORING NO. MW-23-004

CLIENT ORNL/SAC			PROJECT NO. 5329-09
CONTRACTOR LAYNE-NORTHERN CO.		DATE STARTED 7/7/88	COMPLTD. 7/9/88
METHOD HSA	CASING SIZE 4 1/4" ID	PID 10.6	PROTECTION LEVEL D
GROUND EL 271.4'	SOIL DRILLED 103'	ROCK DRILLED NA	▽ BELOW GROUND
LOGGED BY TWT	CHECKED BY JWP	DATE 8/88	SITE D-4

DEPTH (FT)	PID AMB. AIR	SAMP NO. & TYPE NO.	SAMPLE	RECOVERY	CLP	PID HEADSPACE (ppm)	SOIL/ROCK DESCRIPTION	LITHOLOGIC SYMBOL	SOIL CLASS	BLOWS/6-IN RQD % (20 40 60 80 100)	WELL DATA	EL. (FT)
80												
85	BKG	S-17	X	2.0		BKG	SAND; dark gray, becomes very silty at 84 feet, trace black motteling, med dense to loose		SM	3 4 7 10		
	BKG	S-18	X	2.0		BKG	SAND; dark gray, very fine, black motteling, no silt, med dense to loose		SP	3 4 8 9		
90	BKG	S-19	X	2.0		BKG	SILT; dark gray with very fine SAND. Gradual change from sand to silt at 91 feet, soft		ML	WOR-3 3 3		
95	BKG	S-20	X	2.0		BKG	SAND; dark gray, very fine silty sand, loose		SM	3 3 5 2		
100												

* U= THIN WALL S= SPLIT SPOON R= ROCK

E.C. JORDAN CO.

PLATTSBURGH AIR FORCE BASE

BORING NO. MW-23-004

CLIENT ORNL/SAC			PROJECT NO. 5329-09
CONTRACTOR LAYNE-NORTHERN CO.		DATE STARTED 7/7/88	COMPLTD. 7/9/88
METHOD HSA	CASING SIZE 4 1/4" ID	PID 10.6	PROTECTION LEVEL D
GROUND EL 271.4'	SOIL DRILLED 103	ROCK DRILLED NA	▽ BELOW GROUND
LOGGED BY TWT	CHECKED BY JWP	DATE 8/88	SITE D-4

DEPTH (FT)	PID AMB. AIR	SAMP NO. & TYPE NO.	SAMPLE	RECOVERY	CLP	PID HEADSPACE (ppm)	SOIL/ROCK DESCRIPTION	LITHOLOGIC SYMBOL	SOIL CLASS	BLOWS/6-IN RQD % (20 40 60 80 100)	WELL DATA	EL. (FT)
100												
							SAND; dark gray, silty sand to 102'		SM			
				2.0						1 5 6 8		
	S-21	BKG				BKG	CLAY; dark gray, firm, sharp change at 102'		CH			
							BOB = 103'					
105												

* U= THIN WALL S= SPLIT SPOON R= ROCK

E.C. JORDAN CO.

PLATTSBURGH AIR FORCE BASE

BORING NO. MW-23-005

CLIENT ORNL/SAC			PROJECT NO. 5329-09
CONTRACTOR LAYNE-NORTHERN CO.		DATE STARTED 7/10/88	COMPLTD. 7/11/88
METHOD HSA	CASING SIZE 4¼" ID	PID 10.6	PROTECTION LEVEL D
GROUND EL 251.21	SOIL DRILLED 87'	ROCK DRILLED NA	▽ BELOW GROUND
LOGGED BY TWT	CHECKED BY JWP	DATE 8/88	SITE D-4

DEPTH (FT)	PID AMB. AIR	SAMP NO. & TYPE NO.	SAMPLE RECOVERY	CLP	PID HEADSPACE (ppm)	SOIL/ROCK DESCRIPTION	LITHOLOGIC SYMBOL	SOIL CLASS	BLOWS/6-IN RQD % (20 40 60 80 100)	WELL DATA	EL. (FT)
						Note: see log of MW-110 for geologic descriptions of the soils from 0 to 45.'		SP			
45	BKG	S-1	1.5		BKG	SAND; med brown, fine to medium, well sorted well rounded sand, dense No stratification as in MW-201.		SP	5 12 20 27		
50	BKG	S-2	2.0		BKG	SAND; brown, fine to very fine, well sorted, with a 1" silt seam, loose		SP	WOR-4-6-8		
55	BKG	S-3	2.0		BKG			SP	1 4 5 7		
60	BKG	S-4	2.0		0.5	SAND; brown, contains up to 20% SILT below 61.5.' Thin rust seam at contact.		SP/SM	4 6 8 11		

* U= THIN WALL S= SPLIT SPOON R= ROCK

E.C. JORDAN CO.

PLATTSBURGH AIR FORCE BASE

BORING NO. MW-23-005

CLIENT ORNL/SAC			PROJECT NO. 5329-09
CONTRACTOR LAYNE-NORTHERN CO.		DATE STARTED 7/10/88	COMPLTD. 7/11/88
METHOD HSA	CASING SIZE 4¼" ID	PID 10.6	PROTECTION LEVEL D
GROUND EL 251.2'	SOIL DRILLED 87'	ROCK DRILLED NA	▽ BELOW GROUND
LOGGED BY TWT	CHECKED BY JWP	DATE 8/88	SITE D-4

DEPTH (FT)	PID AMB. AIR	SAMP NO. & TYPE NO.	SAMPLE	RECOVERY	CLP	PID HEADSPACE (ppm)	SOIL/ROCK DESCRIPTION	LITHOLOGIC SYMBOL	SOIL CLASS	BLOWS/6-IN RQD % (20 40 60 80 100)	WELL DATA	EL. (FT)
65	BKG	S-5		1.8			SAND; tan, fine, well sorted, no silt, very loose		SP	2 0 3 4		
70	BKG	S-6		1.5			SAND; gray, fine to medium, tr very fine sand, loose		SP	3 5 9 12		
75	BKG	S-7		2.0			SAND; gray very fine, very silty, some black motteling, loose. Change from sand to silty sand at 76'		SM	3 4 4 5		
80	BKG	S-8		2.0			Same SAND and SILTY SAND		SM	5 5 6 11		

* U= THIN WALL S= SPLIT SPOON R= ROCK

E.C. JORDAN CO.

PLATTSBURGH AIR FORCE BASE

BORING NO. MW-23-005

CLIENT ORNL/SAC			PROJECT NO. 5329-09
CONTRACTOR LAYNE-NORTHERN CO.		DATE STARTED 7/10/88	COMPLTD. 7/11/88
METHOD HSA	CASING SIZE 4 1/4" ID	PID 10.6	PROTECTION LEVEL D
GROUND EL 251.2'	SOIL DRILLED 87'	ROCK DRILLED NA	▽ BELOW GROUND
LOGGED BY TWT	CHECKED BY JWP	DATE 8/88	SITE D-4

DEPTH (FT)	PID AMB. AIR	SAMP NO. & TYPE NO.	SAMPLE	RECOVERY	CLP	PID HEADSPACE (ppm)	SOIL/ROCK DESCRIPTION	LITHOLOGIC SYMBOL	SOIL CLASS	BLOWS/6-IN RQD % (20 40 60 80 100)	WELL DATA	EL. (FT)
85	BKG	S-9	X	2.0			SILT; dark gray, clayey, soft.		MH	4 4 6 8		
							CLAY; dark gray, silty clay, black mottling with pieces of peat, soft to firm. Gradual change from clayey silt to silty clay.		CH			
90							BOB = 87'					

* U= THIN WALL S= SPLIT SPOON R= ROCK

E.C. JORDAN CO.

PLATTSBURGH AIR FORCE BASE

BORING NO. MW-23-00

CLIENT ORNL/SAC | PROJECT NO. 5329-09

CONTRACTOR LAYNE-NORTHERN CO. | DATE STARTED 7/20/88 | COMPLTD. 7/21/88

METHOD HSA	CASING SIZE 4¼" ID	PID 10.6	PROTECTION LEVEL D
GROUND EL 245.6'	SOIL DRILLED 45'	ROCK DRILLED NA	▽ BELOW GROUND
LOGGED BY TWT	CHECKED BY JWP	DATE 8/88	SITE D-4

DEPTH (FT)	PID AMB. AIR	SAMP NO. & TYPE NO.	SAMPLE	RECOVERY	CLP	PID HEADSPACE (ppm)	SOIL/ROCK DESCRIPTION	LITHOLOGIC SYMBOL	SOIL CLASS	BLOWS/6-IN RQD % 20 40 60 80 100	WELL DATA	EL. (FT)
0							No samples obtained For geologic description of the soils, refer to boring log of MW-204		SP			
10												
20												
30												
40												
							BOB = 45'					
50												

* U= THIN WALL S= SPLIT SPOON R= ROCK

E.C. JORDAN CO.

PLATTSBURGH AIR FORCE BASE

BORING NO. MW-23-007

CLIENT ORNL/SAC			PROJECT NO. 5321-07
CONTRACTOR LAYNE-NORTHERN CO.		DATE STARTED 7/12/88	COMPLTD. 7/13/88
METHOD HSA	CASING SIZE 4 1/4" ID	PID 10.6	PROTECTION LEVEL D
GROUND EL 245.8'	SOIL DRILLED 20'	ROCK DRILLED N/A	▽ BELOW GROUND
LOGGED BY TWT	CHECKED BY JWP	DATE 8/88	SITE D-4

DEPTH (FT)	PID-AMB. AIR	SAMP NO. & TYPE NO.	SAMPLE RECOVERY	CLP	PID HEADSPACE (ppm)	SOIL/ROCK DESCRIPTION	LITHOLOGIC SYMBOL	SOIL CLASS	BLOWS/6-IN RQD % (20 40 60 80 100)	WELL DATA	EL. (FT)
0	BKG	S-1		1.5	45	SAND: brown to rust brown, fine to med grained, well rounded, med dense		SP	3 2 4 5		
5	BKG	S-2		1.2	BKG	SAND: tan, medium grained, well sorted, well rounded, dense		SP	4 5 9 13		
10	BKG	S-3		0 R	BKG			SP	9 10 15 12		
15	BKG	S-4		1.5	BKG			SP	7 9 12 15		
20											

* U= THIN WALL S= SPLIT SPOON R= ROCK

E.C. JORDAN CO.

PLATTSBURGH AIR FORCE BASE

BORING NO. MW-23-007

CLIENT ORNL/SAC | PROJECT NO. 5329-09

CONTRACTOR LAYNE-NORTHERN CO. | DATE STARTED 7/12/88 | COMPLTD. 7/13/88

METHOD HSA	CASING SIZE 4¼" ID	PID 10.6	PROTECTION LEVEL D
GROUND EL 245.8'	SOIL DRILLED 80'	ROCK DRILLED NA	▽ BELOW GROUND
LOGGED BY TWT	CHECKED BY JWP	DATE 8/88	SITE 2-4

DEPTH (FT)	PID AMB. AIR	SAMP NO. & TYPE NO.	SAMPLE	RECOVERY	CLP	PID HEADSPACE (ppm)	SOIL/ROCK DESCRIPTION	LITHOLOGIC SYMBOL	SOIL CLASS	BLOWS/6-IN RQD % (20 40 60 80 100)	WELL DATA	EL. (FT)
20	BKG	S-5		1.5		BKG	Some SAND with some coarse gravel from 21 to 22'.		SP	7 9 11 12		
25	BKG	S-6		1.8		BKG	Some SAND, no gravel		SP	7 9 16 17		
30	BKG	S-7		1.8		BKG			SP	9 14 16 20		
35	BKG	S-8		2.0		BKG	Some SAND, with rust brown motteling and streaks		SP	5 8 10 13		
40												

* U= THIN WALL S= SPLIT SPOON R= ROCK

E.C. JORDAN CO.

PLATTSBURGH AIR FORCE BASE

BORING NO. MW-23-007

CLIENT ORNL/SAC			PROJECT NO. 5339-09
CONTRACTOR LAYNE-NORTHERN CO.		DATE STARTED 7/12/88	COMPLTD. 7/13/88
METHOD HSA	CASING SIZE 4 1/4" ID	PID 10.6	PROTECTION LEVEL D
GROUND EL 245.8'	SOIL DRILLED 80'	ROCK DRILLED	▽ BELOW GROUND
LOGGED BY TWT	CHECKED BY JWP	DATE 8/88	SITE D-A

DEPTH (FT)	PID AMB. AIR	SAMP NO. & TYPE NO.	SAMPLE	RECOVERY	CLP	PID HEADSPACE (ppm)	SOIL/ROCK DESCRIPTION	LITHOLOGIC SYMBOL	SOIL CLASS	BLOWS/6-IN RQD % (20 40 60 80 100)	WELL DATA	EL. (FT)
0	BKG	S-9		1.8		BKG	SAND; tan, fine to medium grained, with thin rust-brown bands, well sorted, well rounded, med. dense.		SP	5 5 8 14		
5	BKG	S-10		2.0		BKG			SP	5 8 13 21		
10	BKG	S-11		1.1		BKG	Same SAND, trace SILT		SP/SM	5 8 13 14		
15	BKG	S-12		1.5		BKG	Same SAND, no SILT		SP	3 8 13 18		
20												

* U= THIN WALL S= SPLIT SPOON R= ROCK

PLATTSBURGH AIR FORCE BASE

BORING NO. MW-23-00

CLIENT ORNL/SAC			PROJECT NO. 5329-09
CONTRACTOR LAYNE-NORTHERN CO.		DATE STARTED 7/12/88	COMPLTD. 7/13/88
METHOD HSA	CASING SIZE 4 1/4" ID	PID 10.6	PROTECTION LEVEL D
GROUND EL 245.8'	SOIL DRILLED 80'	ROCK DRILLED NA	▽ BELOW GROUND
LOGGED BY TLWT	CHECKED BY JWP	DATE 8/88	SITE D-4

DEPTH (FT)	PID AMB. AIR	SAMP NO. & TYPE NO.	SAMPLE	RECOVERY	CLP	PID HEADSPACE (ppm)	SOIL/ROCK DESCRIPTION	LITHOLOGIC SYMBOL	SOIL CLASS	BLOWS/6-IN RQD % (20 40 60 80 100)	WELL DATA	EL. (FT)
60	BKG	S-13	X	0.7		BKG	SAND; brown, fine and med sand layers interbedded, trace SILT in areas, some rust mottling, dense		SP	7 16 20 27		
65	BKG	S-14	X	1.0		BKG	SAND; gray, fine to med sand, well sorted, well rounded, med dense. sharp color change from brown to gray at 66.5'		SP	4 9 11 18		
70	BKG	S-15	X	0.7		BKG	Gray SAND, becomes silty		SM	4 7 9 13		
75	BKG	S-16	X	0.2		BKG	SAND; gray, silty, trace clay with black mottling, med dense		SM	5 8 10 12		
80	BKG	S-17	X	0.2		BKG	SAND, gray, fine to very fine, no silt or clay, relatively dry, very dense; beginning of TILL		SP	10 26 60 100/6		

BOB = 80'

* U= THIN WALL S= SPLIT SPOON R= ROCK

E.C. JORDAN CO.

PLATTSBURGH AIR FORCE BASE

BORING NO. MW-23-008

CLIENT ORNL/SAC			PROJECT NO. [illegible]
CONTRACTOR LAYNE-NORTHERN CO.		DATE STARTED 7/19/88	COMPLTD. 7/20/88
METHOD HSA	CASING SIZE 4¼" ID	PID 10.6	PROTECTION LEVEL D
GROUND EL 233.6'	SOIL DRILLED 35'	ROCK DRILLED 0.0	▽ BELOW GROUND
LOGGED BY TWT	CHECKED BY JWP	DATE 8/88	SITE D-4

DEPTH (FT)	PID AMB. AIR	SAMP NO. & TYPE NO.	SAMPLE	RECOVERY	CLP	PID HEADSPACE (ppm)	SOIL/ROCK DESCRIPTION	LITHOLOGIC SYMBOL	SOIL CLASS	BLOWS/6-IN RQD % (20 40 60 80 100)	WELL DATA	EL. (FT)
0							No samples obtained For geologic description of the soils, refer to boring log of MW-207		SP			
10												
20												
30												
							BOB = 35'					
40												

* U= THIN WALL S= SPLIT SPOON R= ROCK

E.C. JORDAN CO.

PLATTSBURGH AIR FORCE BASE

BORING NO. MW-23-00

CLIENT ORNL/SAC

PROJECT NO. 5329-09

CONTRACTOR LAYNE-NORTHERN CO.		DATE STARTED 7/19/88	COMPLTD. 7/19/88
METHOD HSA	CASING SIZE 4¼" ID	PID 10.6	PROTECTION LEVEL D
GROUND EL 253.6'	SOIL DRILLED 44'	ROCK DRILLED NA	▽ BELOW GROUND
LOGGED BY TWT	CHECKED BY JWP	DATE 8/88	SITE D-4

DEPTH (FT)	PID AMB. AIR	SAMP NO. & TYPE NO.	SAMPLE	RECOVERY	CLP	PID HEADSPACE (ppm)	SOIL/ROCK DESCRIPTION	LITHOLOGIC SYMBOL	SOIL CLASS	BLOWS/6-IN RQD % 20 40 60 80 100	WELL DATA	EL. (FT)
0							No samples obtained. For geologic description of the soils, refer to boring log of MW-207		SP			
10												
20												
30												
40												
							BOB = 44'					
50												

* U= THIN WALL S= SPLIT SPOON R= ROCK

E.C. JORDAN CO.

PLATTSBURGH AIR FORCE BASE

BORING NO. MW-23-010

CLIENT ORNL/SAC			PROJECT NO. 5339-09
CONTRACTOR LAYNE-NORTHERN CO.		DATE STARTED 7/14/88	COMPLTD. 7/15/88
METHOD HSA	CASING SIZE 4 1/4" ID	PID 10.6	PROTECTION LEVEL D
GROUND EL 233.7'	SOIL DRILLED 72'	ROCK DRILLED	▽ BELOW GROUND
LOGGED BY TWT	CHECKED BY JWP	DATE 8/88	SITE D-4

DEPTH (FT)	PID AMB. AIR	SAMP NO. & TYPE NO.	SAMPLE	RECOVERY	CLP	PID HEADSPACE (ppm)	SOIL/ROCK DESCRIPTION	LITHOLOGIC SYMBOL	SOIL CLASS	BLOWS/6-IN RQD % (20 40 60 80 100)	WELL DATA	EL. (FT)
0	BKG	S-1		1.2		115	SAND; rust brown, med to coarse, tr fine gravel, poorly sorted, well rounded, med dense.		SP	3 4 6 7		
5	BKG	S-2		1.5		BKG	SAND; tan, med to coarse well sorted, well rounded, med dense		SP	4 5 9 10		
10	BKG	S-3		1.1		BKG			SP	4 6 8 11		
15	BKG	S-4		1.8		BKG			SP	9 9 12 13		
20												

* U= THIN WALL S= SPLIT SPOON R= ROCK

E.C. JORDAN CO.

PLATTSBURGH AIR FORCE BASE

BORING NO. MW-23-01(

CLIENT ORNL/SAC			PROJECT NO. 5329-09
CONTRACTOR LAYNE-NORTHERN CO.		DATE STARTED 7/14/88	COMPLTD. 7/15/88
METHOD HSA	CASING SIZE 4 1/4" ID	PID 10.6	PROTECTION LEVEL D
GROUND EL 233.7'	SOIL DRILLED 72	ROCK DRILLED 0	▽ BELOW GROUND
LOGGED BY TWT	CHECKED BY JWP	DATE 8/88	SITE D-A

DEPTH (FT)	PID AMB. AIR	SAMP NO. & TYPE NO.	SAMPLE	RECOVERY	CLP	PID HEADSPACE (ppm)	SOIL/ROCK DESCRIPTION	LITHOLOGIC SYMBOL	SOIL CLASS	BLOWS/6-IN RQD % (20 40 60 80 100)	WELL DATA	EL. (FT)
20	BKG	S-5		0.2		BKG	Some SAND, with two thin interbeds of brown SILT		SP	9 9 12 13		
25	BKG	S-6		2.0		BKG	SAND; brown and rust brown, fine and medium grained sand and gray silty sand layers, all interbedded, poorly sorted, med dense		SW / SM	3 4 6 8		
30	BKG	S-7		1.0		BKG	SAND; brown, med grained, no stratification, well sorted, med dense		SP	3 7 10 11		
35	BKG	S-8		1.8		13	SAND; brown to rust brown, med to coarse sand with gravel, poorly sorted, med dense		SP	4 7 10 14		
40												

* U= THIN WALL S= SPLIT SPOON R= ROCK

E.C. JORDAN CO.

PLATTSBURGH AIR FORCE BASE

BORING NO. MW-23-010

CLIENT ORNL/SAC			PROJECT NO. 5339-09
CONTRACTOR LAYNE-NORTHERN CO.		DATE STARTED 7/14/88	COMPLTD. 7/15/88
METHOD HSA	CASING SIZE 4¼" ID	PID 10.6	PROTECTION LEVEL D
GROUND EL 233.7'	SOIL DRILLED 72	ROCK DRILLED NA	▽ BELOW GROUND
LOGGED BY TWT	CHECKED BY JWP	DATE 8/88	SITE D-A

DEPTH (FT)	PID AMB. AIR	SAMP NO. & TYPE NO.	SAMPLE	RECOVERY	CLP	PID HEADSPACE (ppm)	SOIL/ROCK DESCRIPTION	LITHOLOGIC SYMBOL	SOIL CLASS	BLOWS/6-IN RQD % (20 40 60 80 100)	WELL DATA	EL. (FT)
	BKG	S-9		1.5		5.4	SAND; 40'-40.7' is same gravelly sand as in S-8. Changes abruptly to a brown, fine to med, well sorted, well rounded med dense sand below 40.7'		SP	2 7 10 13		
	BKG	S-10		0.2		BKG	SAND; brown, fine sand interbedded with silty sand layers. Becomes gray fine sand sharply below 46.5'		SP/SM	5 10 10 19		
50	BKG	S-11		1.8		BKG	SAND; dark gray, very fine sand: interbedded with thin silty sand layers. Trace black mottling, med dense.		SP/SM	9 12 17 16		
55	BKG	S-12		0.2		BKG			SP/SM	5 9 12 23		
60												

* U= THIN WALL S= SPLIT SPOON R= ROCK

E.C. JORDAN CO.

PLATTSBURGH AIR FORCE BASE

BORING NO. MW-23-010

CLIENT ORNL/SAC			PROJECT NO. 5329-09
CONTRACTOR LAYNE-NORTHERN CO.		DATE STARTED 7/14/88	COMPLTD. 7/15/88
METHOD HSA	CASING SIZE 4¼" ID	PID 10.6	PROTECTION LEVEL D
GROUND EL 233.7'	SOIL DRILLED 72'	ROCK DRILLED NA	▽ BELOW GROUND
LOGGED BY TWT	CHECKED BY JWP	DATE 8/88	SITE D-4

DEPTH (FT)	PID AMB. AIR	SAMP NO. & TYPE NO.	SAMPLE	RECOVERY	CLP	PID HEADSPACE (ppm)	SOIL/ROCK DESCRIPTION	LITHOLOGIC SYMBOL	SOIL CLASS	BLOWS/6-IN RQD % (20 40 60 80 100)	WELL DATA	EL. (FT)
60	BKG	S-13	X	1.6		BKG	SAND; light gray, fine grained no silt except as very small interbedded seams, med dense		SP	6 11 17 21		
65	BKG	S-14	X	0.2		BKG	SILT; dark gray, with up to 30% very fine sand, tr clay, soft to firm		ML	4 5 9 6		
70	BKG	S-15	X	0.2		BKG	SAND; gray, silty, to 71.' Becomes fine to very fine sand with no silt or clay, dense.		SP	5 23 38 18		
75							BOB = 72'					

* U= THIN WALL S= SPLIT SPOON R= ROCK

E.C. JORDAN CO.

PLATTSBURGH AIR FORCE BASE			Boring no: MW-23-011;
Client ORNL/SAC			Project no: 532924
Contractor JOHN MATHES & ASSOC.		Date started 11/22/88	Completed 11/22/88
Method HSA	Casing size 4'/4 ID	PID 10.6	Protect'n level "C" Dermal
Ground el. 231'	Soil drilled 32.5'	Rock drilled NA	▽ Below grnd ≈ 21'
Logged by KDK, BGC	Ch'd by	Date	Site D-4

Depth (ft)	PID ambient air	Sample no. and type no.	Sample	Recovery	CLP	PID headspace (ppm)	Soil/rock description	Lithologic symbol	Soil class	Blows/6-in. or RQD % 0 20 40 60 80 100	Well data	Elevation (ft)
5							NO SAMPLES TAKEN SEE SOIL LOGS FOR MW-326		SP		GROUT	
10											PELLETS	
15												
20												
25												

*U = Thin wall tube S = Split spoon R = Rock

E.C. JORDAN

PLATTSBURGH AIR FORCE BASE			**Boring no:** MW-23-011
Client ORNL/SAC			**Project no:** 532924
Contractor JOHN MATHES & ASSOC.		**Date started** 11/22/88	**Completed** 11/22/88
Method HSA	**Casing size** 4¼ ID	**PID** 10.6	**Protect'n level** "C" DEDUNC
Ground el. 231'	**Soil drilled** 32.5'	**Rock drilled** NA	▽ **Below grnd** ≈ 21'
Logged by KDK, BGC	**Ch'd by**	**Date**	**Site** D-4

Depth (ft)	PID ambient air	Sample no. and type no.	Sample	Recovery	CLP	PID headspace (ppm)	Soil/rock description	Lithologic symbol	Soil class	Blows/6-in. or RQD % 0 20 40 60 80 100	Well data	Elevation (ft)
5							NO SAMPLES TAKEN SEE SOIL LOGS for MW-326		SP			
30							BOB 32.5'					

*U = Thin wall tube S = Split spoon R = Rock

E.C. JORDAN

PLATTSBURGH AIR FORCE BASE			**Boring no:** MW-23-012
Client ORNL/SAC			**Project no:** 532924
Contractor JOHN MATHES & ASSOC.		**Date started** 11/21/88	**Completed** 11/22/88
Method HSA	**Casing size** 4¼ ID	**PID** 10.6	**Protect'n level** "C" DERMAL
Ground el. 231'	**Soil drilled** 74'	**Rock drilled** NA	▽ **Below grnd** ≥ 21'
Logged by KDK, BGC	**Ch'd by**	**Date** 11/21/88	**Site** D-4

Depth (ft)	PID ambient air	Sample no. and type no.	Sample	Recovery	CLP	PID headspace (ppm)	Soil/rock description	Lithologic symbol	Soil class	Blows/6-in. or RQD % (0 20 40 60 80 100)	Well data	Elevation (ft)
	BKG	S-1	X	NA		10 ppm	SAND, L. BROWN, P. GRADED, FINE TO MED SAND, TR CRS, LOOSE MOIST		SP	CUTTINGS		
5	BKG	S-2	X	1.6		BKG	LAMINATED FINE SANDS W/DARK BANDS		SP	2 4 6 8		
10	BKG	S-3	X	1.2		BKG			SP	4 9 11 18		
15	BKG	S-4	X	1.4		BKG			SP	4 9 12 16	GROUT	
20	BKG	S-5	X	1.5		BKG	BROWN COLOR CHANGE GRAY ▽ 21'		SP	4 7 9 13		
25												

*U = Thin wall tube S = Split spoon R = Rock

PLATTSBURGH AIR FORCE BASE			**Boring no:** MW-23-012
Client ORNL/SAC			**Project no:** 532924
Contractor JOHN MATHES & ASSOC.		**Date started** 11/21/88	**Completed** 11/22/88
Method HSA	**Casing size** 4¼ ID	**PID** 10.6	**Protect'n level** "C" DERMAL
Ground el. 231'	**Soil drilled** 74'	**Rock drilled** NA	▽ **Below grnd** ≥ 21
Logged by KDK, BGC	**Ch'd by**	**Date**	**Site** D-4

Depth (ft)	PID ambient air	Sample no. and type no.	Sample	Recovery	CLP	PID headspace (ppm)	Soil/rock description	Lithologic symbol	Soil class	Blows/6-in. or RQD % (0 20 40 60 80 100)	Well data	Elevation (ft)
25	BKG	S-6	X	1.6		1ppm	SAND, GRAY, P. GRADED, MED TO FINE SAND, COMMON TO MOD DENSE, SATURATED		SP	7 8 12 14		
30	BKG	S-7	X	1.4		BKG			SP	WOR/0.5' 4 5 6	GROUT	
35	BKG	S-8	X	1.8		BKG			SP	6 10 12 14		
40	BKG	S-9	X	1.6		BKG	RUNNING SANDS		SP	WOR/1.0' 1 3	SLURRY	
45	BKG	S-10	X	1.6		1ppm			SP	9 13 27 28		
50												

*U = Thin wall tube S = Split spoon R = Rock

E.C. JORDAN

PLATTSBURGH AIR FORCE BASE			**Boring no:** MW-23-012
Client ORNL/SAC			**Project no:** 532924
Contractor JOHN MATHES & ASSOC.		**Date started** 11/21/88	**Completed** 11/22/88
Method HSA	**Casing size** 4 1/4 ID	**PID** 10.6	**Protect'n level** "C" DERMAL
Ground el. 231'	**Soil drilled** 74'	**Rock drilled** NA	▽ **Below grnd** ≈ 21
Logged by KDK, BGC	**Ch'd by**	**Date**	**Site** D-4

Depth (ft)	PID ambient air	Sample no. and type no.	Sample	Recovery	CLP	PID headspace (ppm)	Soil/rock description	Lithologic symbol	Soil class	Blows/6-in. or RQD % (0 20 40 60 80 100)	Well data	Elevation (ft)
50	BKG	S-11	X	1.6		BKG	SAND, GRAY, P. GRADED, MED TO FINE SAND, MOD DENSE SATURATED		SP	3 7 7 13		
55	BKG	S-12	X	1.7		BKG			SP	3 7 10 14		
60	BKG	S-13	X	2.0		BKG			SP	3 7 7 12		
65	BKG	S-14	X	1.9		BKG	266' SILT CLAY, GRAY, HIGH PLASTIC, SOFT		CL	2 1 3 4	PELLETS	
		S-15	X	1.9			SILTY SAND, GRAY, V. FINE to FINE SAND MOD DENSE, MOD PLASTIC		SM	3 7 11 18	SAND	
70	BKG	S-16	X	1.6		BKG	~71' SILTY CLAY, GRAY, MOD PLASTIC, MOD STIFF		SM / CL	1 2 2 8	NATURAL CAVE	
	BKG	S-17	X	2.0		BKG	SILT, GRAY, TR FINE SAND, MOD PLASTIC ~73' CLAY, GRAY, HIGH PLASTIC, W/ORGANIC MATERIAL		SM / CL	WOR/1.0' 1 2		

BOE 74'

*U = Thin wall tube S = Split spoon R = Rock

1 of 3

PLATTSBURGH AIR FORCE BASE			Boring no: MW-23-013
Client ORNL/SAC			Project no: 532924
Contractor JOHN MATHES & ASSOC.		Date started 11/20/88	Completed 11/21/88
Method HSA	Casing size 4¼" ID	PID 10.6	Protect'n level "C" DERMAL
Ground el. 233'	Soil drilled 74'	Rock drilled N/A	▽ Below grnd ≈ 24'
Logged by KDK, BGC	Ch'd by	Date	Site D-4

Depth (ft)	PID ambient air	Sample no. and type no.	Sample	Recovery	CLP	PID headspace (ppm)	Soil/rock description	Lithologic symbol	Soil class	Blows/6-in. or RQD % (0 20 40 60 80 100)	Well data	Elevation (ft)
	BKG	S-1	X	1.2		BKG	SAND, BROWN, P GRADED FINE TO MED SAND, MOD DENSE, DRY		SP	1 1 2 2		
5	BKG	S-2	X	1.3		BKG			SP	3 3 6 8		
10	BKG	S-3	X	1.6		BKG	FINE TO MED SAND V. FINE TO FINE SAND		SP	7 11 13 16	GROUT	
15	BKG	S-4	X	1.7		BKG			SP	8 12 13 18		
20	BKG	S-5	X	1.3		BKG			SP	6 12 19 19		
25							DRY SATURATED ▽					

*U = Thin wall tube S = Split spoon R = Rock

E.C. JORDAN

PLATTSBURGH AIR FORCE BASE			Boring no: MW-23-013
Client ORNL/SAC			Project no: 532924
Contractor JOHN MATHES & ASSOC.		Date started 11/20/88	Completed 11/21/88
Method HSA	Casing size 4¼" ID	PID 10.6	Protect'n level "C" DERMAL
Ground el. 233'	Soil drilled 74'	Rock drilled NA	▽ Below grnd ≈ 24'
Logged by KDK, BGC	Ch'd by	Date	Site D-4

Depth (ft)	PID ambient air	Sample no. and type no.	Sample	Recovery	CLP	PID headspace (ppm)	Soil/rock description	Lithologic symbol	Soil class	Blows/6-in. or RQD % (0 20 40 60 80 100)	Well data	Elevation (ft)
25	BKG	S-6	X	1.8		BKG	SAND, P GRADED, BROWN, V. FINE TO FINE, SAND, MOD DENSE, SATURATED		SP	4 6 14 18		
30	8ppm	S-7	X	1.0		BKG			SP	6 12 18 20		
35	2ppm	S-8	X	1.3		BKG	RUNNING SANDS		SP	1 4 7 13	GROUT	
40	5ppm	S-9	X	1.2		BKG			SP	WOR/0.5 2 8 13		
							BROWN GRAY					
45	2ppm	S-10	X	1.6		BKG			SP	WOR/1.0' 2 7	SLURRY	
50												

*U = Thin wall tube S = Split spoon R = Rock

PLATTSBURGH AIR FORCE BASE			**Boring no:** MW-23-013
Client ORNL/SAC			**Project no:** 532924
Contractor JOHN MATHES & ASSOC.		**Date started** 11/20/88	**Completed** 11/21/88
Method HSA	**Casing size** 4¼ ID	**PID** 10.6	**Protect'n level** "C" DERMA
Ground el. 233'	**Soil drilled** 74'	**Rock drilled** NA	▽ **Below grnd** ≈ 24'
Logged by KDK, BGC	**Ch'd by**	**Date**	**Site** D-4

Depth (ft)	PID ambient air	Sample no. and type no.	Sample Recovery	CLP	PID headspace (ppm)	Soil/rock description	Lithologic symbol	Soil class	Blows/6-in. or RQD % (0 20 40 60 80 100)	Well data	Elevation (ft)
50		S-11	1.8		BKG	SAND, GRAY, P. GRADED, MED SAND, SATURATED MOD DENSE, MASSIVE		SP	3 5 7 13	SLURRY	
55		S-12	1.6		BKG			SP	3 7 10 14		
60		S-13	1.7		BKG	SILTY CLAY, GRAY, High Plastic, MOD STIFF		SP / CL	3 7 7 12		
						SAND, GRAY, P. GRADED, FINE, w/ SILT, LOOSE, SATURATED		SM			
65		S-14	2.0		BKG	~66' SANDY CLAY, GRAY, MED TO FINE SAND, MOD PLASTIC, SOFT SATURATED		SM / CL	2 1 3 4	PELLETS	
70		S-15	1.9		BKG	~70' SILT, GRAY, MED TO FINE SAND, MOD PLASTIC, LOW DENSE, SATURATED		SM	3 7 14 18	NATURAL CAVE	
		S-16	1.0		BKG	72.5' CLAY, GRAY, V. PLASTIC, SOFT		CL	WOR/1.5' 6/0.5'		
						BOE 74'					

*U = Thin wall tube S = Split spoon R = Rock

E.C. JORDAN

APPENDIX D

TEST PIT LOGS

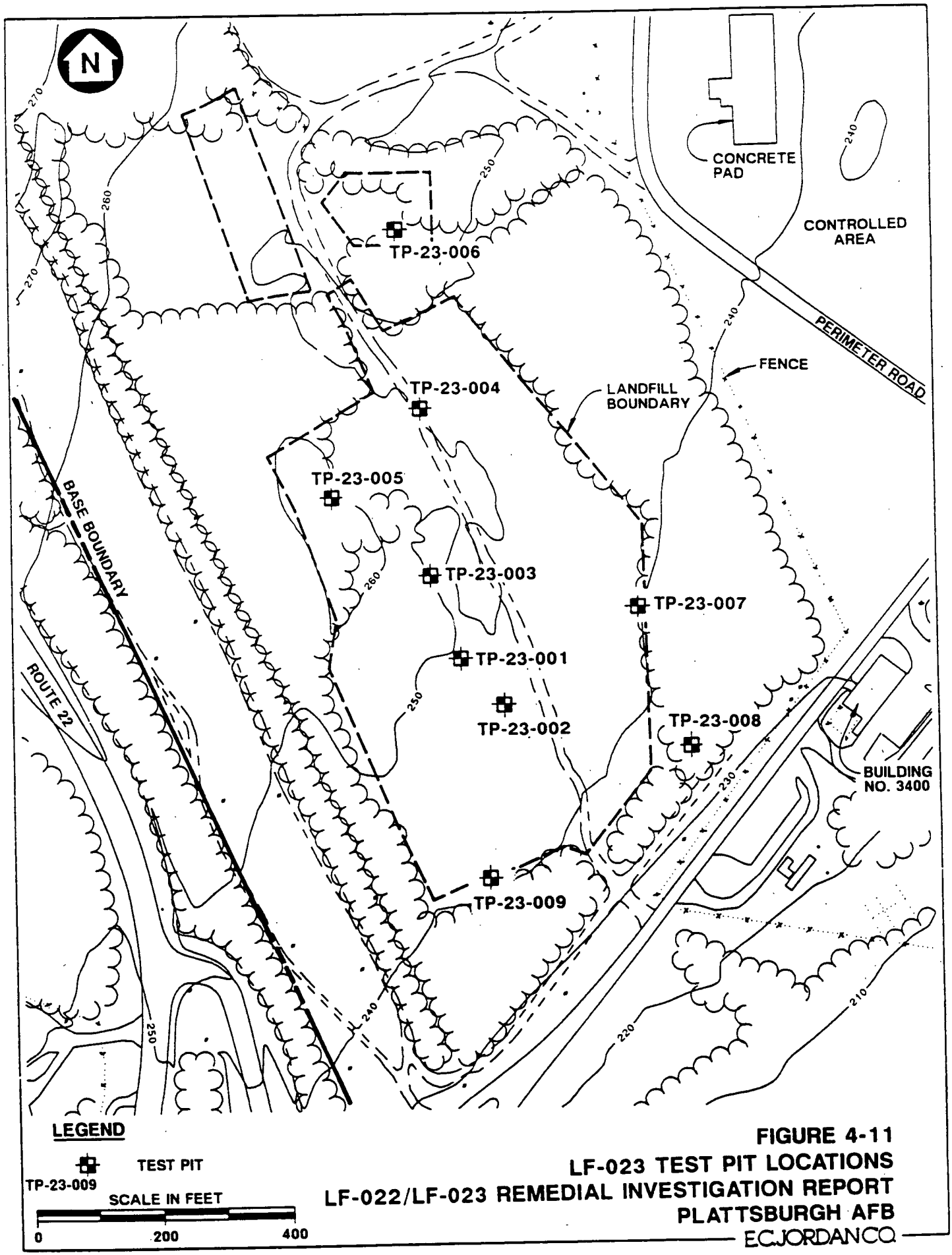

FIGURE 4-11
LF-023 TEST PIT LOCATIONS
LF-022/LF-023 REMEDIAL INVESTIGATION REPORT
PLATTSBURGH AFB

E.C.JORDAN CO.

6091-10

TEST PIT RECORD

SITE PAFB Dump 4

TEST PIT TP-23-001 DATE 11/3/87 TIME ST. 730 END 815

COORDINATES N360 E 160 GRID ELEMENT

SKETCH MAP OF TEST PIT SITE
(SHOW SURFACE MONITORING RESULTS)

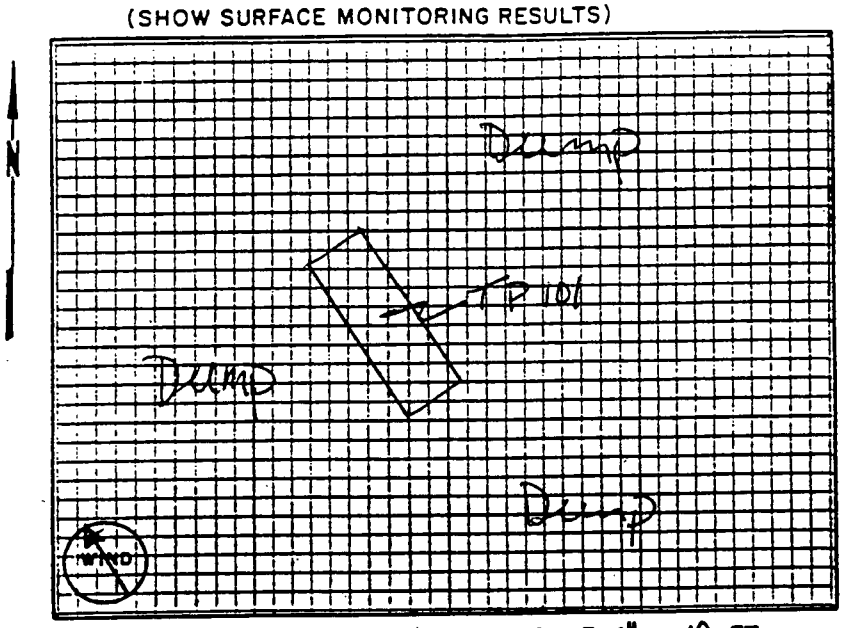

SCALE 1" = 10 FT

CREW MEMBERS
1. Kasper ECJ
2. Khiran ECJ
3. Rounds Layne
4.
5.
6.

MONITOR EQUIPMENT

PI METER	Y	N
EXPLOSIVE GAS	Y	N
AVAIL. OXYGEN	Y	N
OVA	Y	N

OTHER

PHOTOGRAPHS, ROLL

EXPOSURE

NOTES Investigate large magnetic anomaly in Dump 4 level D
No waste, no Rocks, no sample taken

Depth	PI Reading
@ 5'	5 @ surface level
7'	24 @ ¢
7.5'	90 @ ¢
8'	50 @ ¢

TEST PIT RECORD
PROFILE ALONG TEST PIT- TP-23-001

SITE DAFB D4

DEPTH (FT) 8' SCALE 1" = 10 FT

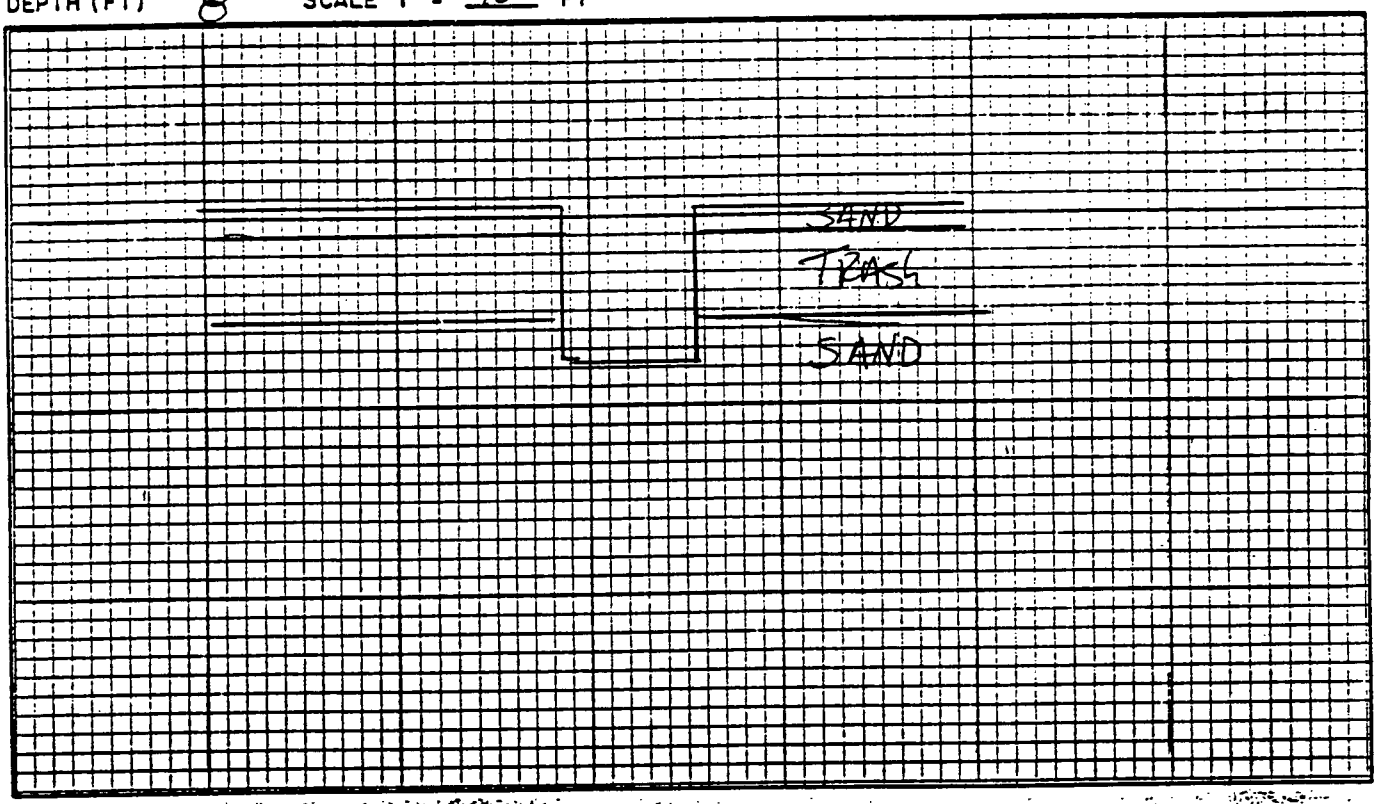

NOTES:
0 - 1.5' Red SAND
fine → Course Grained 80%
mod-sorted
sub-Rounded, Trace Silt
Trace V. Course Sand.
1.5 - 6' TRASH
Several Large Steel
objects, ~~gal~~ glass,
Plastic, wood, NO ASH
6 - 8' SAND Gray
V. fine - med Sand
Trace Silt
mod. sorted.

SAMPLES OBTAINED

NO.	DEPTH (FT)	INIT. SER. NO.	HD. SP. VOA PPM
S-1	NO	Sample	taken
S-2			
S-3			
S-4			
S-5			
S-6			
S-7			
S-8			

REFERENCE: FIELD BOOK, PG. 1
ATTACHMENTS

SIGNATURE

TEST PIT RECORD

SITE PAFB Dump 4

TEST PIT TP-23-002 DATE 11/3/87 TIME ST. 825 END 905

COORDINATES N270 E200 MAG GRID GRID ELEMENT

SKETCH MAP OF TEST PIT SITE
(SHOW SURFACE MONITORING RESULTS)

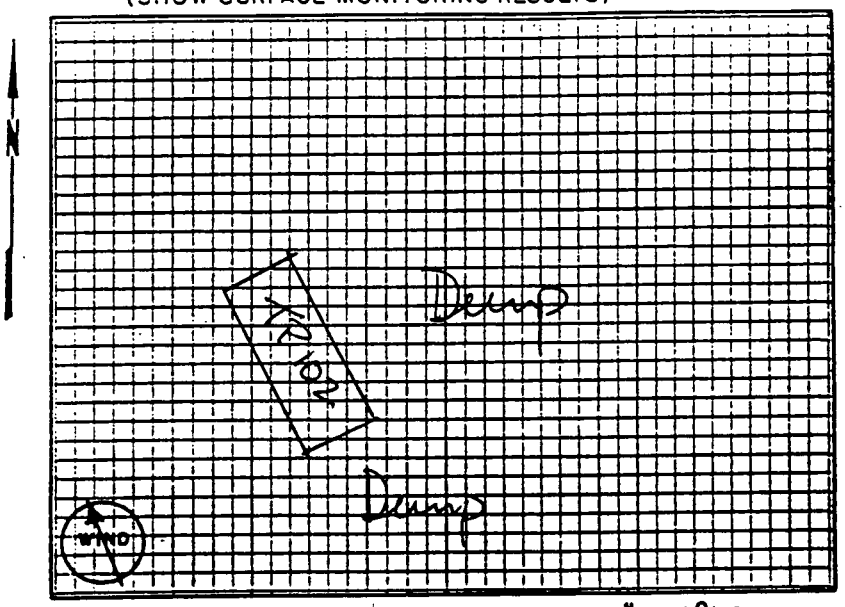

SCALE 1" = 10 FT

CREW MEMBERS
1. Kraeger ECJ
2. Kilgran ECJ
3. Rounds Layne
4.
5.
6.

MONITOR EQUIPMENT

PI METER	Y	N
EXPLOSIVE GAS	Y	N
AVAIL. OXYGEN	Y	N
OVA	Y	N

OTHER

PHOTOGRAPHS, ROLL

EXPOSURE

NOTES Investigate large magnetic anomaly in Dump 4
level D
NO water, NO Rocks,

~~No Sample taken~~

Depth	PI Reading
1'	45 @ surface level
1.5'	60 @ ℄
3'	20 → 100 @ ℄
4'	80 @ ℄
10'	90 @ ℄

BLUE CRYSTALS @ 2.0'

TEST PIT RECORD
PROFILE ALONG TEST PIT- TP-23-002

SITE PAFB D4

DEPTH (FT) 11 SCALE 1" = 10 FT

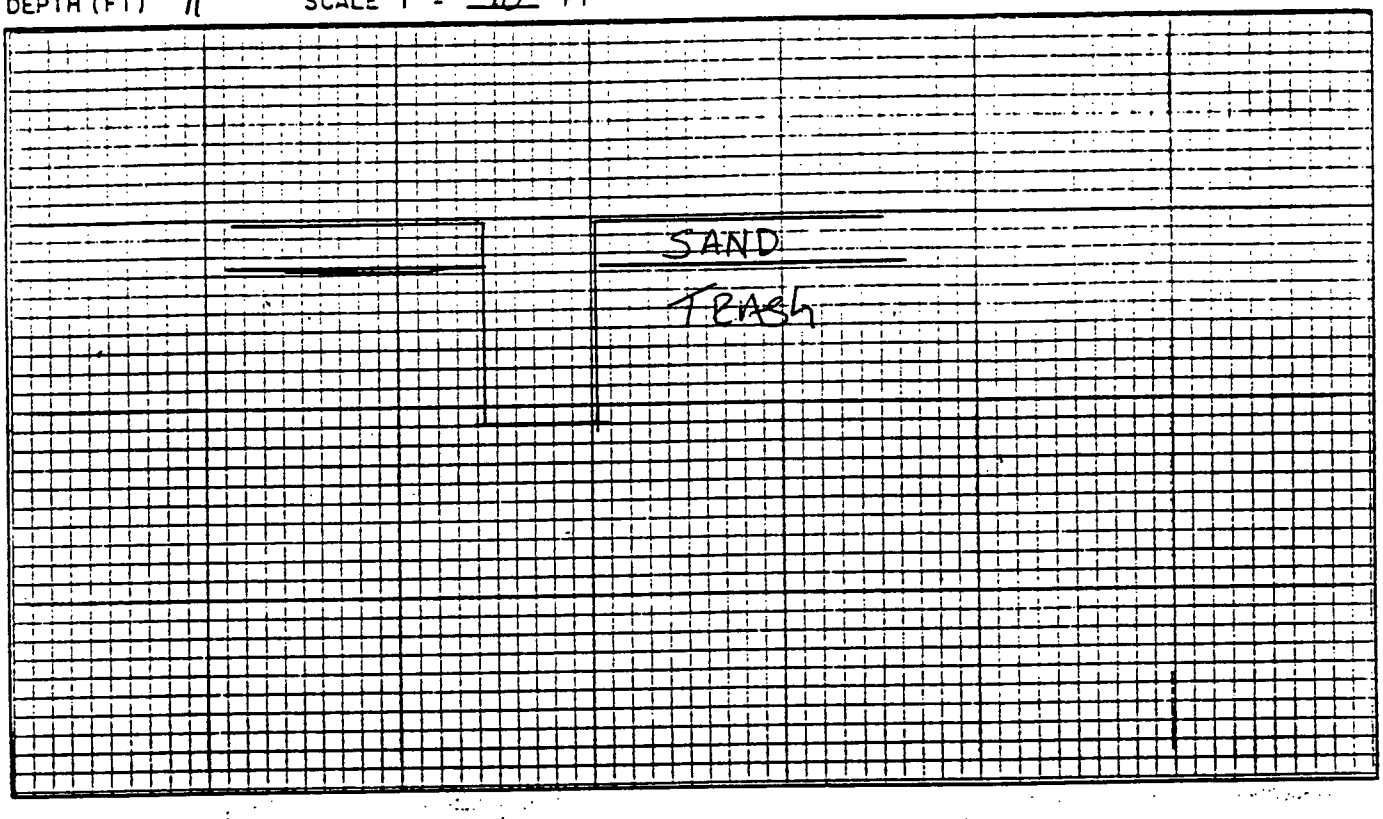

NOTES:

0-3' SAND, Red
fine - mod Grained Sand
Trace Silt, Trace V. Coarse
mod-sorted, sub-Rounded
3'-11' TRASH
General Trash
No many large
steel objects.

BLUE XC's @ 2'

SAMPLES OBTAINED

NO.	DEPTH (FT)	INIT. SER. NO.	HD. SP. VOA PPM
S-1	2'	D4XTP10202	
S-2	(4)	BLUE XC'S	
S-3			
S-4			
S-5			
S-6			
S-7			
S-8			

REFERENCE: FIELD BOOK, PG. 4
ATTACHMENTS

Kel Kegan
SIGNATURE

TEST PIT RECORD

SITE PAFB D4

TEST PIT TP-23-003 DATE 11/3/87 TIME ST. 920 END 940

COORDINATES N 500 E160 GRID ELEMENT

SKETCH MAP OF TEST PIT SITE
(SHOW SURFACE MONITORING RESULTS)

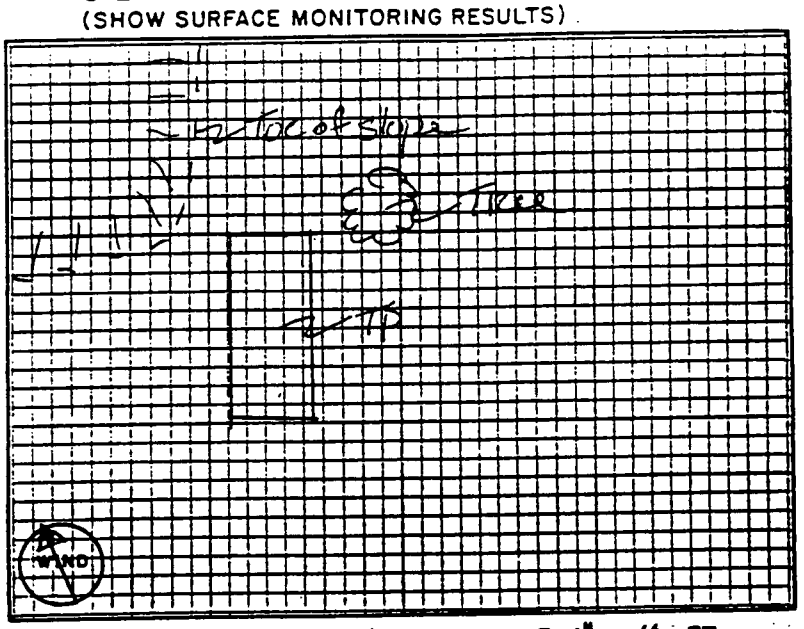

SCALE 1" = 10 FT

CREW MEMBERS
1. Kasper ECJ
2. Khran ECJ
3. Ronds Layne
4.
5.
6.

MONITOR EQUIPMENT

PI METER	Y	N
EXPLOSIVE GAS	Y	N
AVAIL. OXYGEN	Y	N
OVA	Y	N
OTHER		

PHOTOGRAPHS, ROLL
EXPOSURE

NOTES Investigate large magnetic anomaly in Dump 4
level D
No water, no Rocks
PI Reading Background throughout pit
No Sample taken
~~Note~~ Note: large anomaly and no steel may have been caused by exposed steel in adjacent slope.

TEST PIT RECORD
PROFILE ALONG TEST PIT– TP-23-003

SITE PAFB D4

DEPTH (FT) 8' SCALE 1" = 10 FT

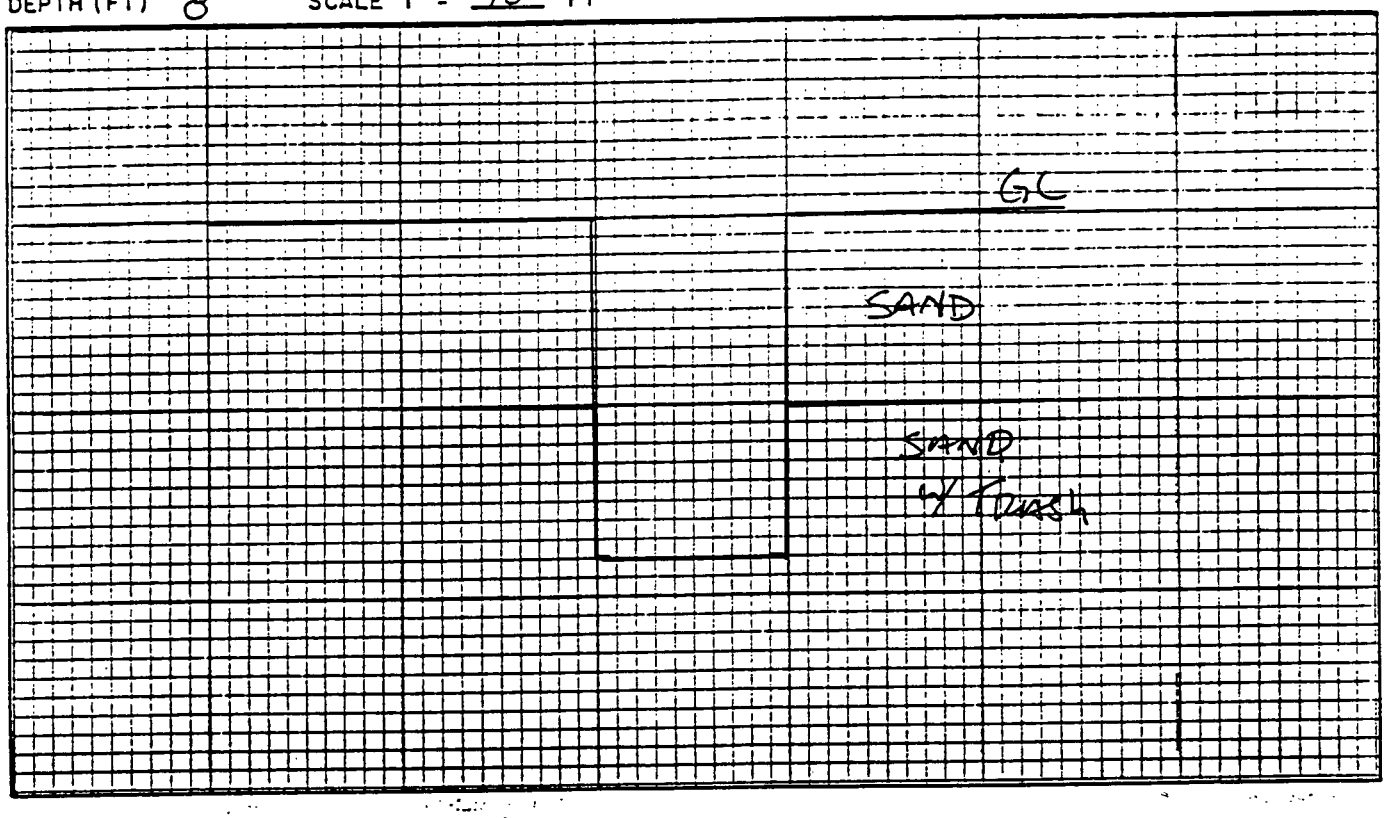

NOTES:

0-5' SAND, GRAY
v. fine - med GRAINED SAND
mod-sorted, sub-Rounded
& very little trash, "clean"
fill

5-8ft SAND, GRAY
same as above but
more trash < 5% vol,

SAMPLES OBTAINED

NO.	DEPTH (FT)	INIT. SER. NO.	HD. SP. VOA PPM
S-1		NO Sample Taken	
S-2			
S-3			
S-4			
S-5			
S-6			
S-7			
S-8			

REFERENCE: FIELD BOOK, PG. 5
ATTACHMENTS

Kel Kayes
SIGNATURE

TEST PIT RECORD

SITE PAFB D4

TEST PIT TP-23-004 DATE 11/3/87 TIME ST. ~~1010~~ 1010 END ~~1030~~ 1030

COORDINATES N760 E240 MA6621D GRID ELEMENT

SKETCH MAP OF TEST PIT SITE
(SHOW SURFACE MONITORING RESULTS)

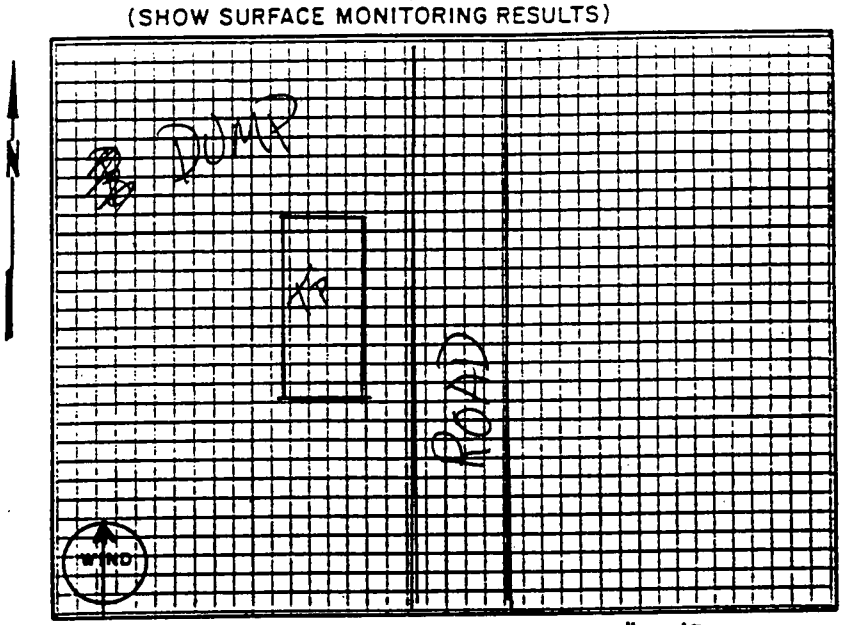

SCALE 1" = 10 FT

CREW MEMBERS

1. Knapp ECJ
2. Khran ECJ
3. Ronda Cayne
4.
5.
6.

MONITOR EQUIPMENT

PI METER	Y	N
EXPLOSIVE GAS	Y	N
AVAIL. OXYGEN	Y	N
OVA	Y	N

OTHER

PHOTOGRAPHS, ROLL

EXPOSURE

NOTES Investigate large magnetic anomaly in Dump 4

No water, no Rocks

Bottom of Pit @ ~~8'~~ 8'

PI Reading Back Ground Levels

No sample taken

TEST PIT RECORD
PROFILE ALONG TEST PIT– TP-23-004

SITE PAFB DH

DEPTH (FT) 8' SCALE 1" = 10 FT

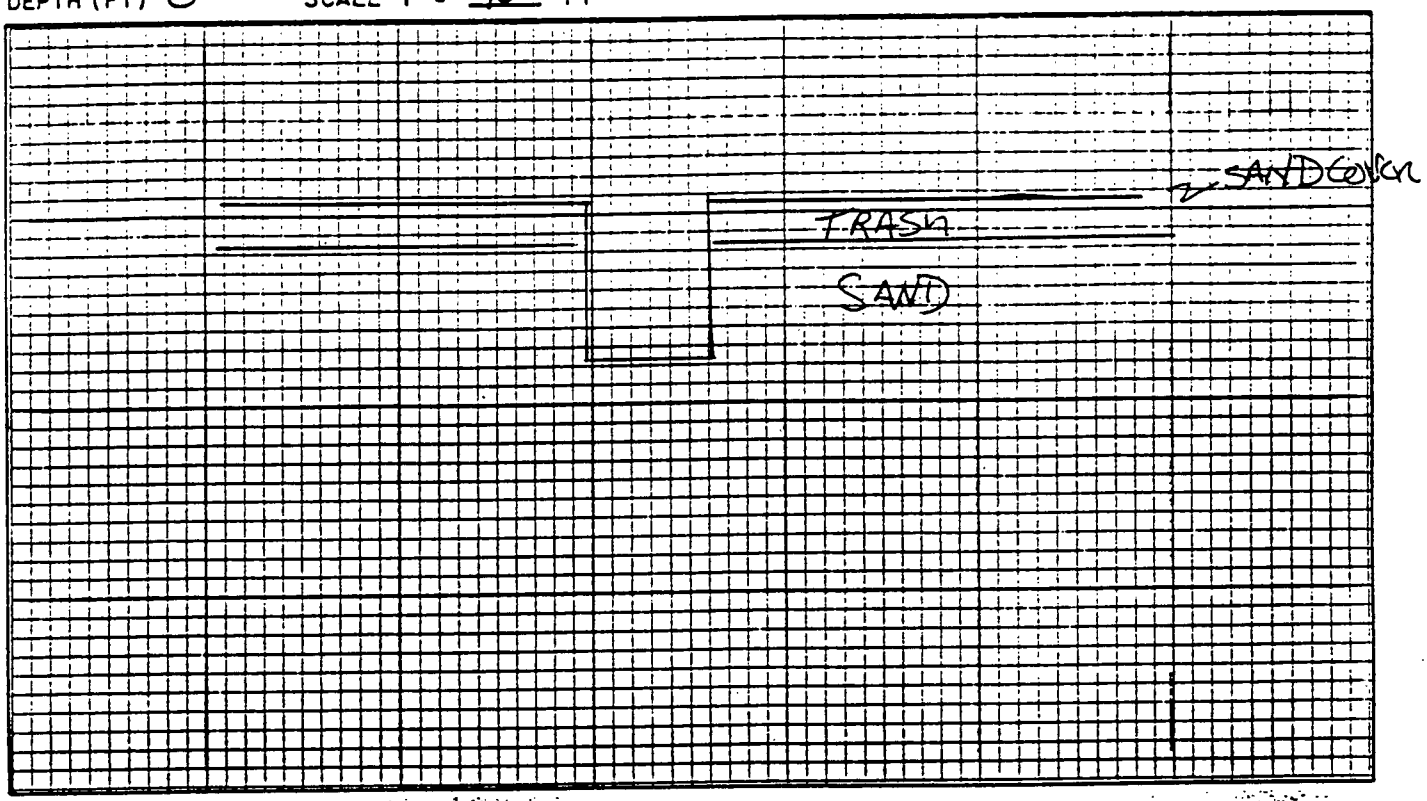

NOTES:

0-.25 SAND
med GRAINED SAND
Red/Brown
TRACE Silt
.25'-2' TRASH
@ 1' crushed CLAY
2'-8' SAND
GRAY, mod sorted
fine-med-GRAINED
sub-rounded, Natural?
SAND

SAMPLES OBTAINED

NO.	DEPTH (FT)	INIT. SER. NO.	HD. SP. VOA PPM
S-1	NO Sample taken		
S-2			
S-3			
S-4			
S-5			
S-6			
S-7			
S-8			

REFERENCE: FIELD BOOK, PG. 7

ATTACHMENTS

Karl Kr

SIGNATURE

TEST PIT RECORD

SITE PAFB DH

TEST PIT TP-23-005 DATE 11/3/87 TIME ST. 1050 END 1115

COORDINATES N680 E80 GRID ELEMENT

SKETCH MAP OF TEST PIT SITE
(SHOW SURFACE MONITORING RESULTS)

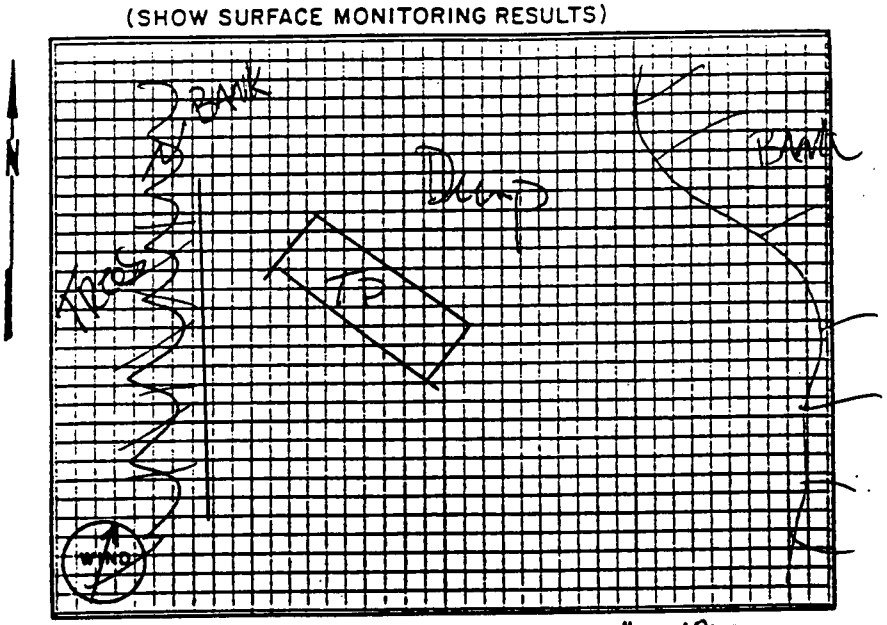

SCALE 1" = 10 FT

CREW MEMBERS

1. Kroger ECJ
2. Khiran ECJ
3. Randy Layne
4.
5.
6.

MONITOR EQUIPMENT

PI METER	Y	N
EXPLOSIVE GAS	Y	N
AVAIL. OXYGEN	Y	N
OVA	Y	N

OTHER

PHOTOGRAPHS, ROLL

EXPOSURE

NOTES Investigate large magnetic anomaly in Dump 4
No water, no Rerds
level D
Bottom of Pit @ 10'
PI Readings background (Light Rain)

TEST PIT RECORD
PROFILE ALONG TEST PIT- TP-23-005

SITE PAFB D4

DEPTH (FT) 10' SCALE 1" = 10 FT

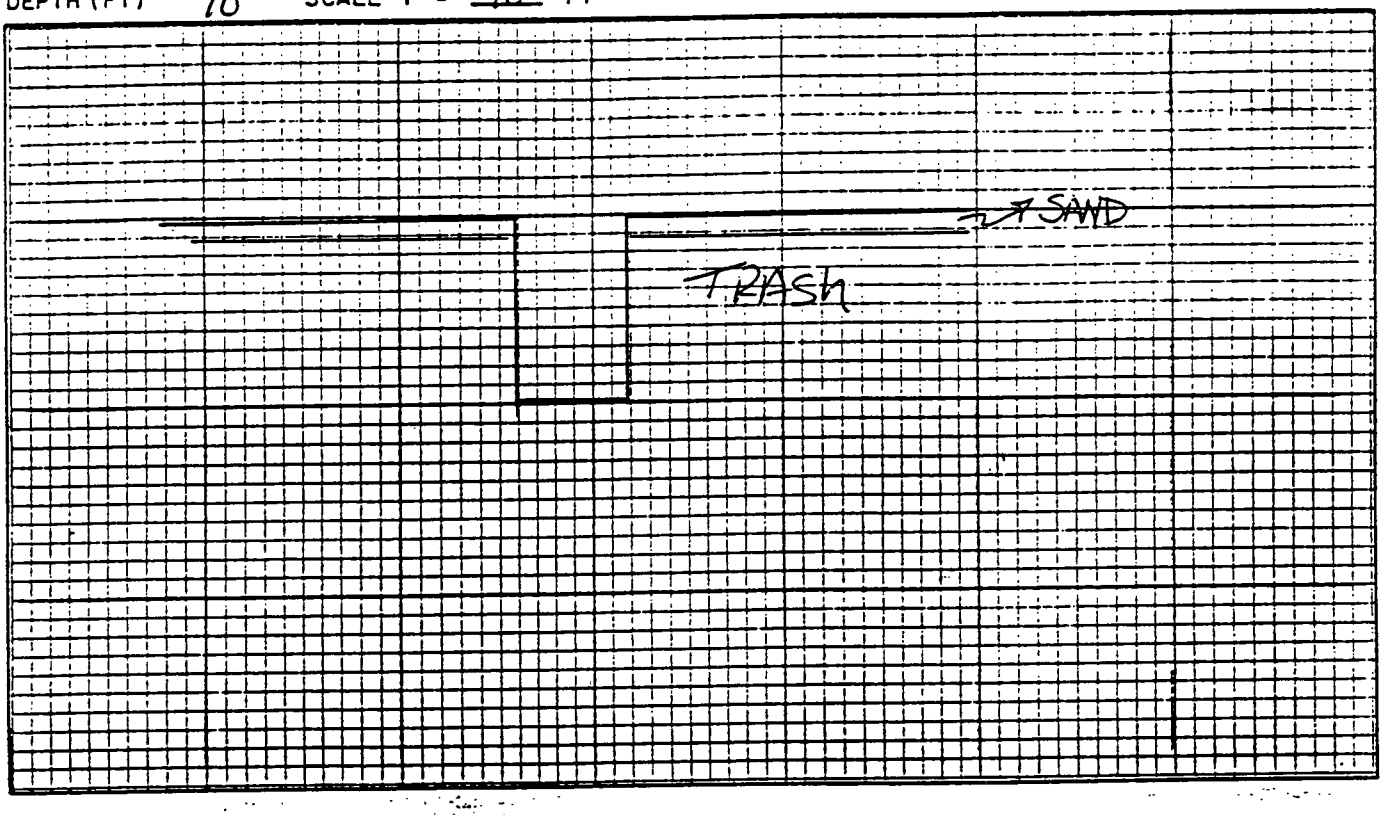

NOTES:
0 - 1.2' SAND
Red/Brown
fine - med sand
mod. sorted, fill
1.2 - 10' TRASH
several large steel
objects.

SAMPLES OBTAINED

NO.	DEPTH (FT)	INIT. SER. NO.	HD. SP. VOA PPM
S-1	10	D4XTP10410	
S-2			
S-3			
S-4			
S-5			
S-6			
S-7			
S-8			

REFERENCE: FIELD BOOK, PG. 9
ATTACHMENTS

Kel Kozma
SIGNATURE

TEST PIT RECORD

SITE PAER D4

TEST PIT TP-23-006 DATE 11/3/87 TIME ST. 1200 END 1250

COORDINATES N1040 E300 MAG GRID GRID ELEMENT

SKETCH MAP OF TEST PIT SITE
(SHOW SURFACE MONITORING RESULTS)

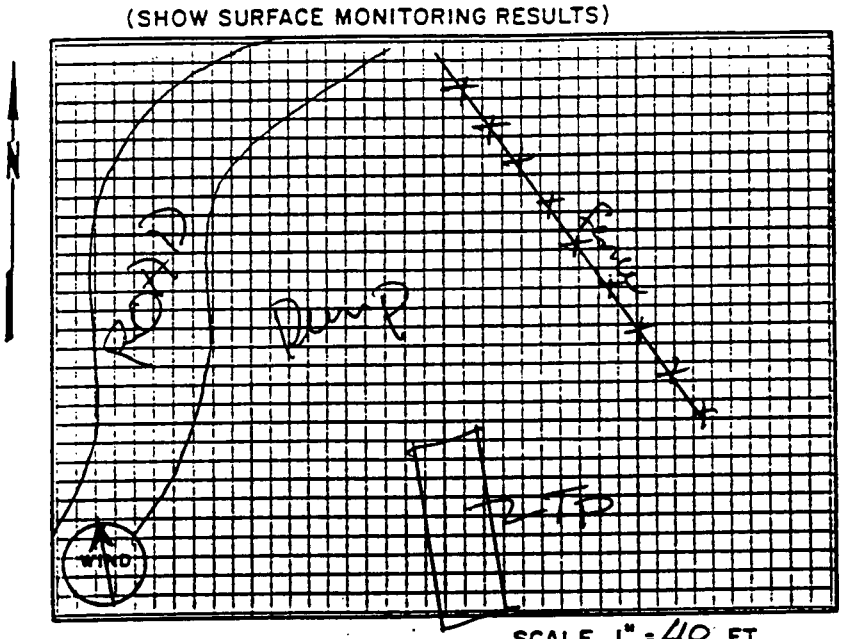

SCALE 1" = 40 FT

CREW MEMBERS

1. Kaspee ECJ
2. Khran ECJ
3. Rounds Layne
4.
5.
6.

MONITOR EQUIPMENT

PI METER	Y	N
EXPLOSIVE GAS	Y	N
AVAIL. OXYGEN	Y	N
OVA	Y	N

OTHER

PHOTOGRAPHS, ROLL 2

EXPOSURE

NOTES Investigate large magnetic anomaly in Dump 4
no water, no Rocks
Bottom of Pit @ 13'
PI Reading Back Ground w/ spikes up to 20 ppm (RAIN)

TEST PIT RECORD
PROFILE ALONG TEST PIT- TP-23-006

SITE PAFB D4

DEPTH (FT) 13' SCALE 1" = 10 FT

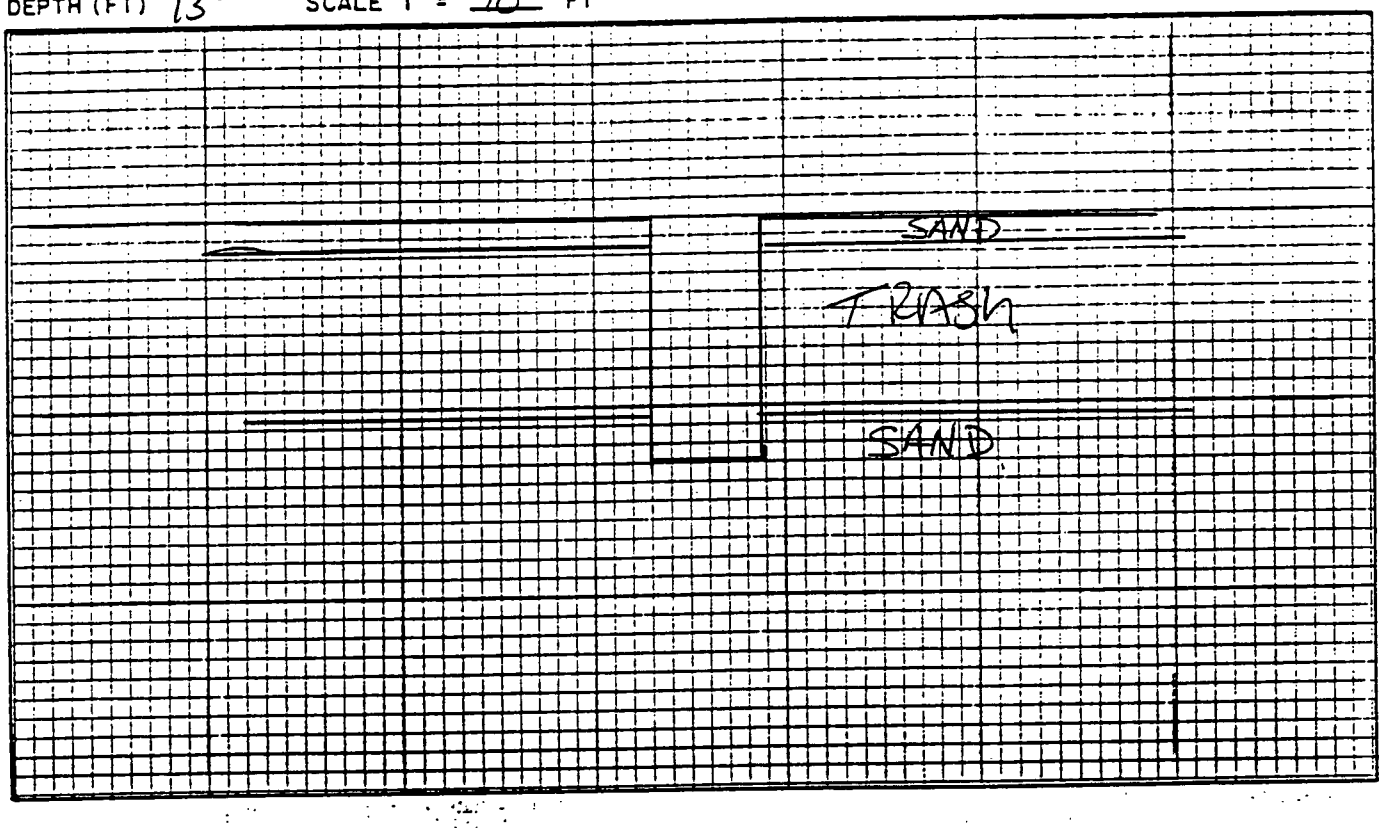

NOTES:

0 - 1.5' SAND
DARK BROWN,
fine - Coarse GRAVEL
Loose, Moist, sub-Round
w/ broken pieces of asphalt
1.5 - 12.5 TRASH
Layered Sand and
Trash, a few large
steel objects.
12.5 - 13' SAND, GRAY
V. fine - med SAND,
sub-Rounded, mod sorted.

SAMPLES OBTAINED

NO.	DEPTH (FT)	INIT. SER. NO.	HD. SP. VOA PPM
S-1	13	DHXTP1061B	
S-2			
S-3			
S-4			
S-5			
S-6			
S-7			
S-8			

REFERENCE: FIELD BOOK, PG. 15
ATTACHMENTS

Karl Kopp
SIGNATURE

TEST PIT RECORD

SITE PAFB D4

TEST PIT TP-23-007 DATE 11/3/87 TIME ST. 1400 END 1445

COORDINATES N 3410 E 460 MAG Grid GRID ELEMENT

SKETCH MAP OF TEST PIT SITE
(SHOW SURFACE MONITORING RESULTS)

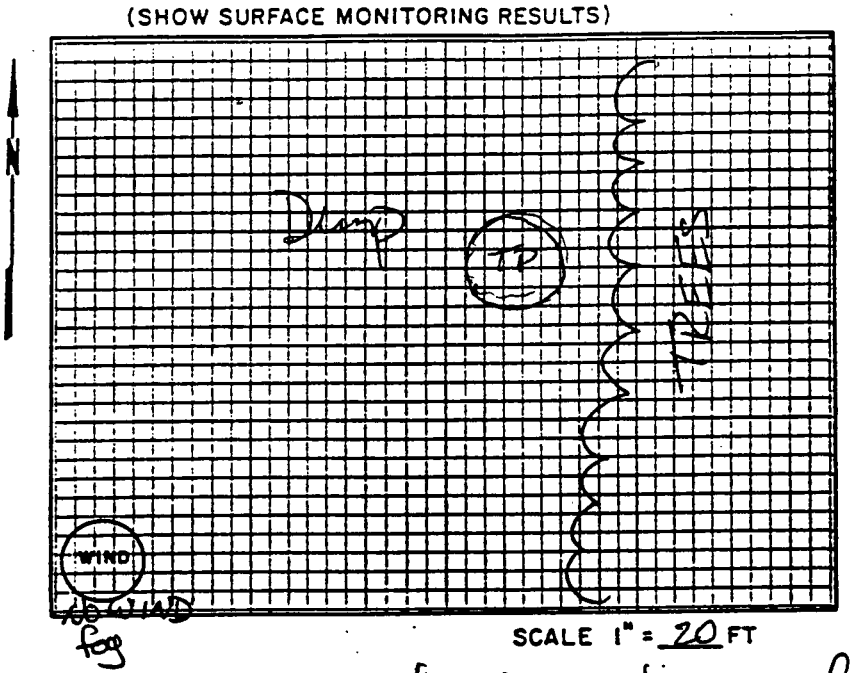

SCALE 1" = 20 FT

CREW MEMBERS

1. Kasper ECJ
2. Khan ECJ
3. Rounds Cayne
4.
5.
6.

MONITOR EQUIPMENT

PI METER	Y	N
EXPLOSIVE GAS	Y	N
AVAIL. OXYGEN	Y	N
OVA	Y	N

OTHER

PHOTOGRAPHS, ROLL

EXPOSURE

NOTES Investigate sub-surface hydrologic and soil stratigraphy
No water ~~table~~, NO Rocks, NO Trash
Bottom of Pit 10 ft.
DI Readings Back Ground.

TEST PIT RECORD
PROFILE ALONG TEST PIT- TP-23-007

SITE PAFB D4

DEPTH (FT) 10ft SCALE 1" = 10 FT

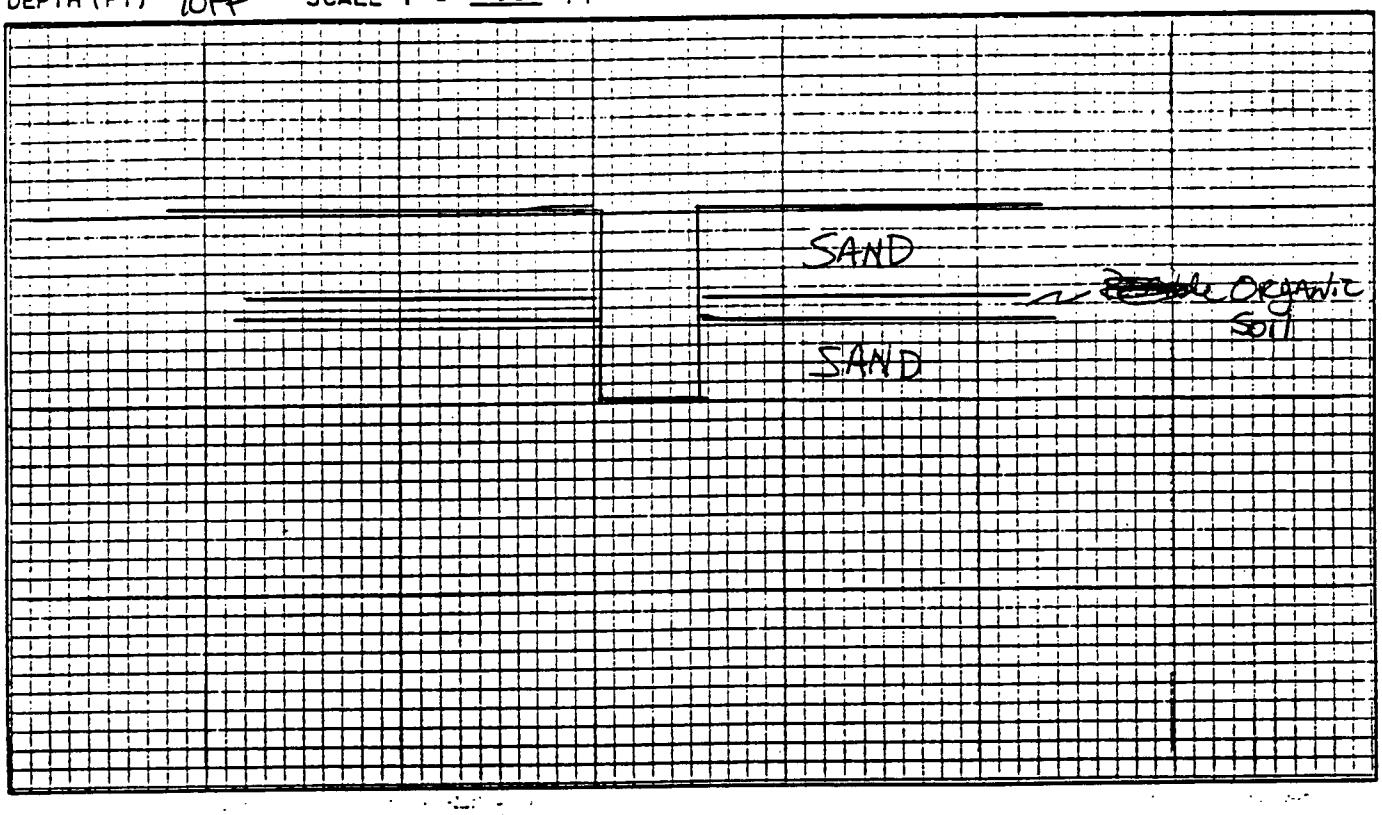

NOTES:

0-4.5' SAND, BROWN
v. fine - med Grained
mod, Sorted, TRACE SILT
5-5.5' ORGANIC Soil
Black w/ TRACE SAND
Possible buried A HORRIZION
NO TRASH
5.5'-10' SAND, GRAY
v. fine - med GRAINED SAND.
Cravered ≈ 1cm Rich, w/
Black Laminations, NO
TRASH, NATURAL? GROUND.

SAMPLES OBTAINED

NO.	DEPTH (FT)	INIT. SER. NO.	HD. SP. VOA PPM
S-1	5'	D4XTP10705	
S-2			
S-3			
S-4			
S-5			
S-6			
S-7			
S-8			

REFERENCE: FIELD BOOK, PG. 16
ATTACHMENTS

Kel Kozar
SIGNATURE

TEST PIT RECORD

SITE PAFB D4

TEST PIT TP-23-008 DATE 11/3/87 TIME ST. 1500 END 1520

COORDINATES 1/100 E460 MAG GRID GRID ELEMENT

SKETCH MAP OF TEST PIT SITE
(SHOW SURFACE MONITORING RESULTS)

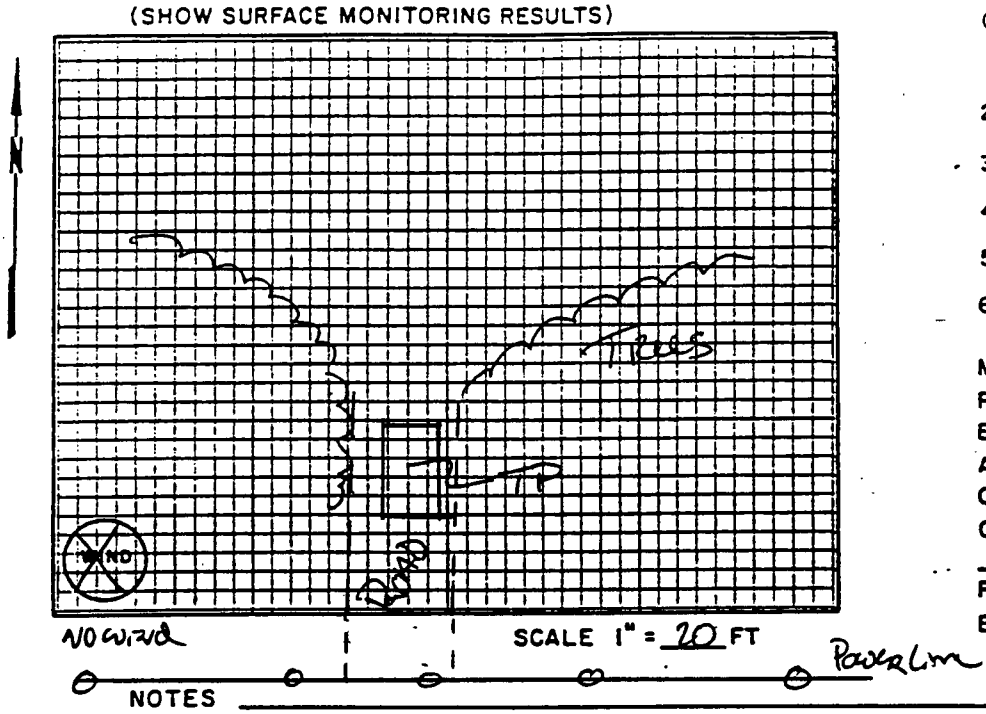

SCALE 1" = 20 FT

CREW MEMBERS

1. Kasper ECJ
2. Khrum ECJ
3. Rands Cayne
4.
5.
6.

MONITOR EQUIPMENT

PI METER	Y	N
EXPLOSIVE GAS	Y	N
AVAIL. OXYGEN	Y	N
OVA	Y	N

OTHER

PHOTOGRAPHS, ROLL

EXPOSURE

NOTES

Investigate sub-surface hydrologic and soil stratigraphy.

No water, no Rocks, no Trash
Bottom of Pit 8ft
PI Reading Back Ground.

TEST PIT RECORD
PROFILE ALONG TEST PIT- TP-23-008

SITE PAFB D4

DEPTH (FT) 8' SCALE 1" = 10 FT

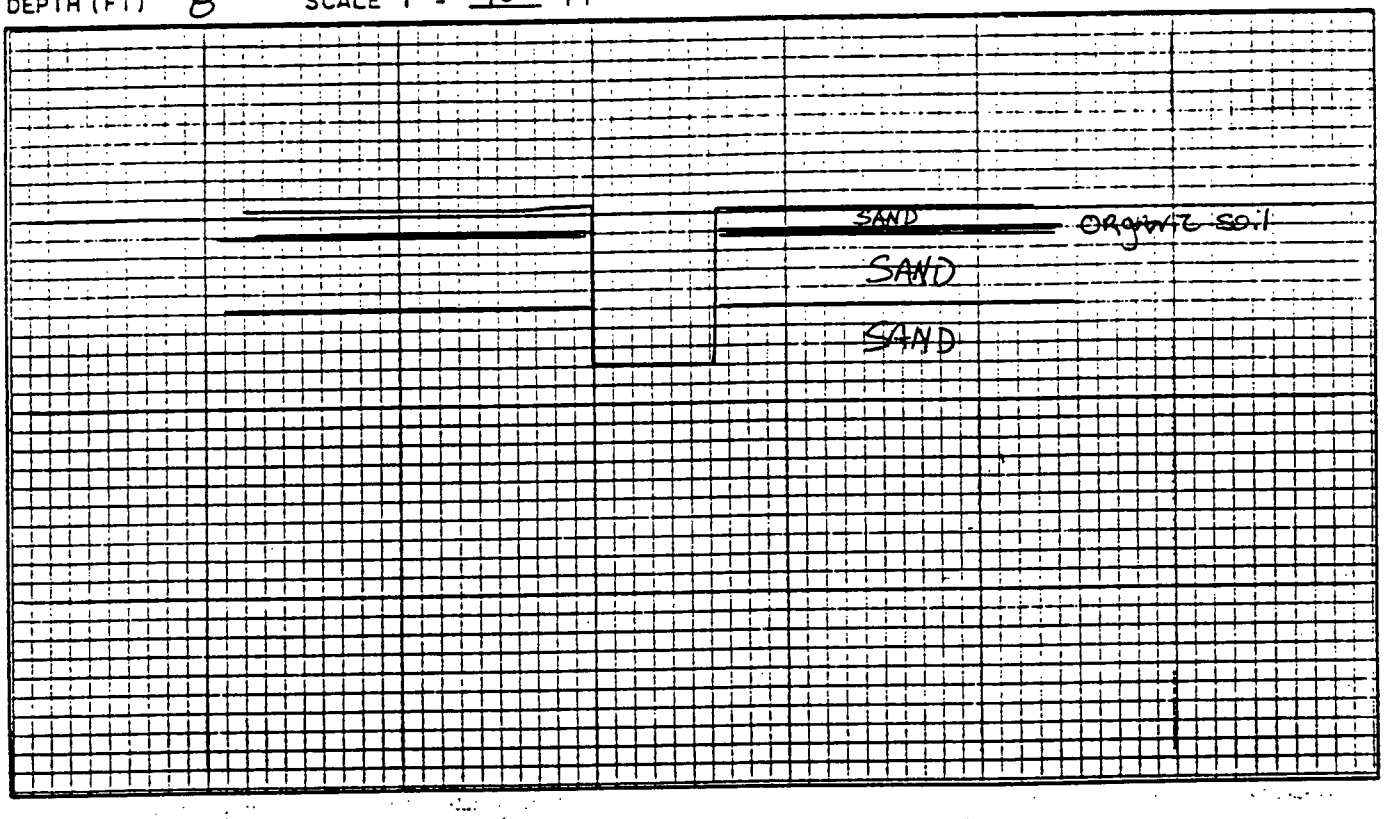

NOTES:

0-1 SAND, Brown, fine-Med Grained, Trace Silt, Mod. Sorted

1-1.5' Possible buried, Organic Soil, A' Horizon, Sandy Loam w/ Rootlets, NO TRASH

1.5-4' SAND, Red Brown → Gray color, fine-med grained Trace Silt, Mod. Sorted.

4-8' SAND, Gray fine-med grained Sand Layered ≈ 1cm w/ Black Concentrations, Natural? Sand NO TRASH

SAMPLES OBTAINED

NO.	DEPTH (FT)	INIT. SER. NO.	HD. SP. VOA PPM
S-1	8'	DHXTP10808	
S-2			
S-3			
S-4			
S-5			
S-6			
S-7			
S-8			

REFERENCE: FIELD BOOK, PG. 18

ATTACHMENTS

SIGNATURE

TEST PIT RECORD

SITE PAFB D4

TEST PIT TP-23-009 DATE 11/3/87 TIME ST. 1550 END 1630

COORDINATES N20 E80 MAG GRID GRID ELEMENT

SKETCH MAP OF TEST PIT SITE
(SHOW SURFACE MONITORING RESULTS)

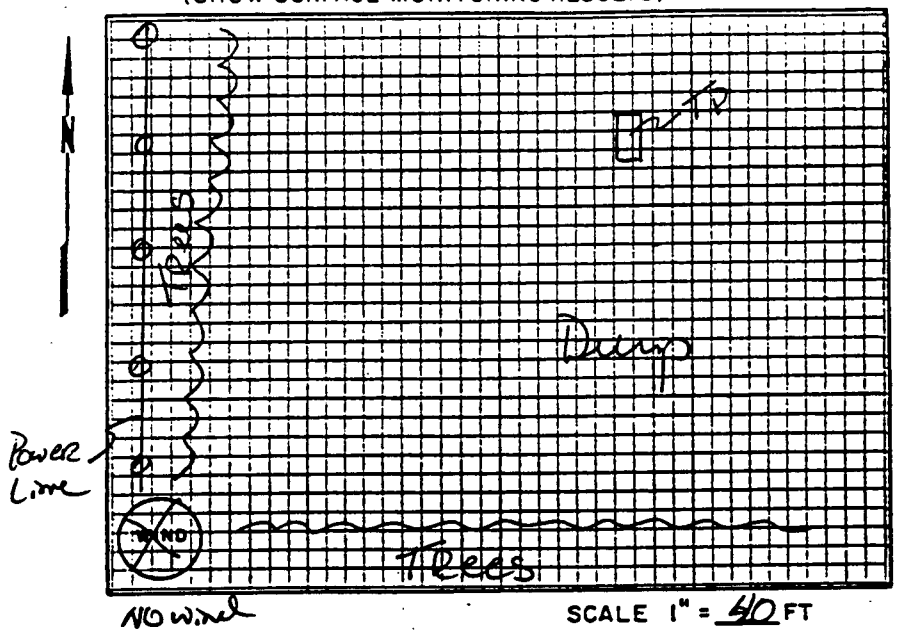

SCALE 1" = 40 FT

CREW MEMBERS
1. Knepec ECJ
2. Khrcan ECJ
3. Rounds Layne
4.
5.
6.

MONITOR EQUIPMENT

PI METER	Y	N
EXPLOSIVE GAS	Y	N
AVAIL. OXYGEN	Y	N
OVA	Y	N

OTHER

PHOTOGRAPHS, ROLL

EXPOSURE

NOTES Investigate sub-surface hydrologic and soil stratigraphy.
No water, No rocks,
Bottom of Pit 9.5'
PT Readings Back Ground

TEST PIT RECORD
PROFILE ALONG TEST PIT- TP-23-009

SITE PAFB D4

DEPTH (FT) 9.5' SCALE 1" = 10 FT

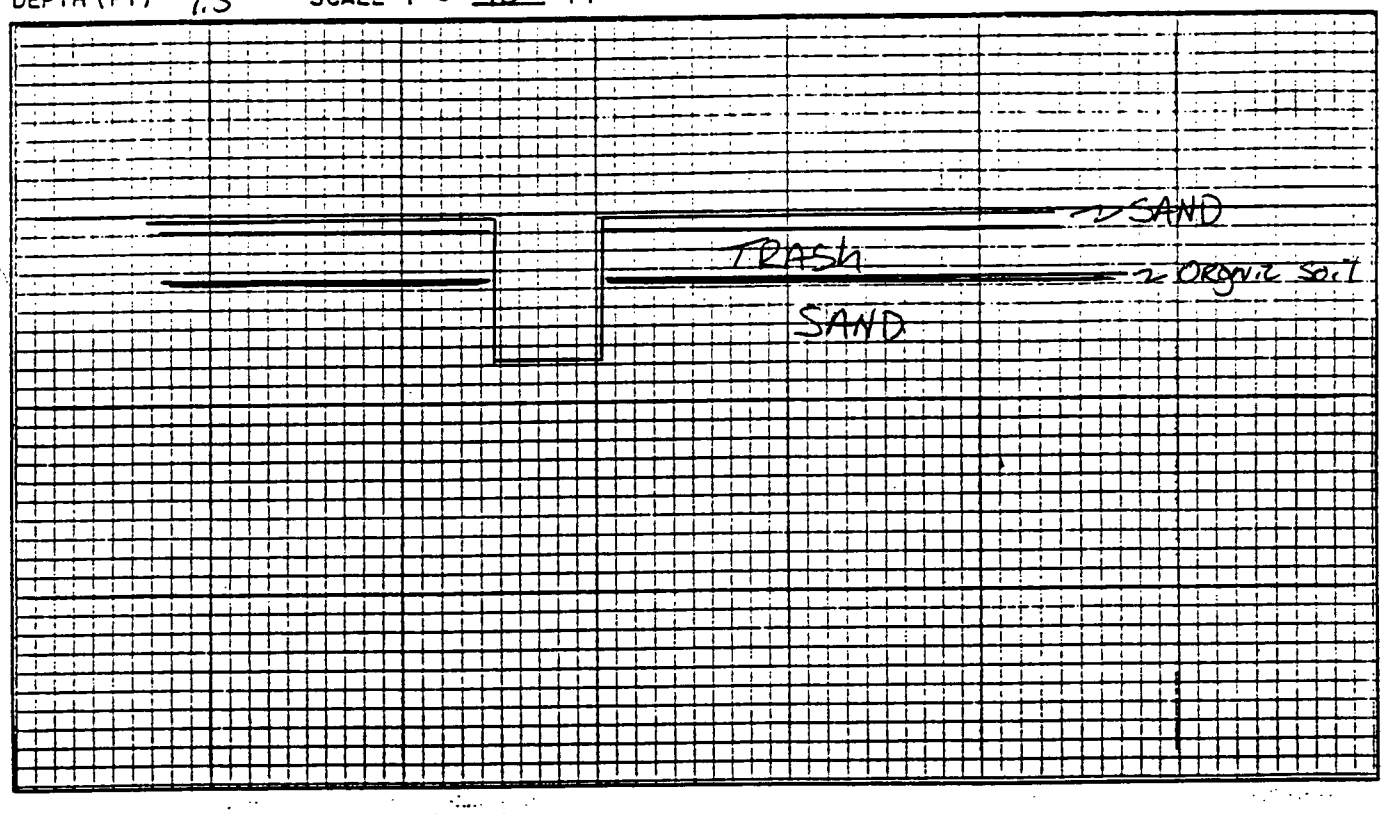

NOTES:
0-1' SAND, Red/Brown
fine-Med. gravel sand.
mod sorted, sub-rounded.
1-3.5' TRASH, mostly
bagged.
3.5'-4.0' ORGANIC Soil, Black
A Type soil Horizon
4.0-9.5' SAND, Gray/
fine-Med sand w/ Trace silt
sub-Rounded, mod. sorting
NO TRASH

SAMPLES OBTAINED

NO.	DEPTH (FT)	INIT. SER. NO.	HD. SP. VOA PPM
S-1	9.5'	D4XTP10910	
S-2	9.5'	D4DTP10910	Dup
S-3			
S-4			
S-5			
S-6			
S-7			
S-8			

REFERENCE: FIELD BOOK, PG. 20
ATTACHMENTS

SIGNATURE

APPENDIX E

BASELINE RISK ASSESSMENT
SOURCE: FINAL RI (FEBRUARY 1992)

second step, contaminant emission rates (Q_{10}) are estimated. These results are based on surface soil data and the area of the contaminated surface. The third step is to predict air concentrations (C_{10}).

Based on field measurements of erodible soil for surfaces with an "unlimited reservoir," an emission rate (E_{10}) for PM_{10} particles can be estimated. This estimation is based on site observations such as the fraction of surface with continuous vegetative cover and the type of vegetation present. This calculation also accounts for mean annual wind speed. Results of these calculations are presented in Appendix L.

Contaminant emission rates are calculated based on PM_{10} emission rates (E_{10}). Surface area of the site and surface soil concentrations of contaminants are considered. Contaminant emission rates (Q_{10}) are listed in Appendix L.

The last step in the box modeling process is to calculate airborne contaminant concentrations (C_{10}). This calculation is based on the contaminant emission rate (Q_{10}) calculated in Step 2, the fraction of a 24-hour day which activity occurs at the site, and the ventilation rate of the site. It was assumed that activity would occur at LF-023 24 hours per day. The ventilation rate is based on wind speed, the mixing height and the width of the site perpendicular to the wind. It was assumed that the downwind distance from the edge of LF-023 to a receptor was 1 m; the mixing height (i.e., the mean vertical displacement of emissions) is calculated based on this assumption. These results are presented in Appendix L.

Table 4-10 lists the airborne contaminant concentration (C_{10}) and the contaminant emission rate (Q_{10}) for each compound detected in the surface soil of LF-023. For a distance 1 m downwind of LF-023, the predicted airborne contaminant concentrations are very low even with the conservative assumptions used in this modeling. Exposure due to particulate emissions is not anticipated to be significant.

4.4 BASELINE RISK ASSESSMENT

A baseline risk assessment was conducted for Landfill LF-023 to determine whether contaminants at the site pose a risk to human and/or ecological receptors. This assessment consisted of three components: (1) Data Evaluation, (2) Human Health Risk Assessment, and (3) Habitat-Based Environmental Risk Assessment. The evaluated environmental media include groundwater, surface water, sediment, surface

TABLE 4-10
LF-023 CONTAMINANT PARTICULATE EMISSIONS

LF-022/LF-023 REMEDIAL INVESTIGATION REPORT
PLATTSBURGH AFB

COMPOUND	Q_{10} (mg/s)	C_{10} (mg/m^3)
Naphthalene	2.18E-04	4.00E-07
2-Methylnaphthalene	1.49E-04	2.74E-07
Acenaphthene	1.38E-03	2.53E-06
Dibenzofuran	7.46E-04	1.37E-06
Fluorene	1.32E-03	2.42E-06
Phenanthrene	1.55E-02	2.84E-05
Anthracene	2.70E-03	4.94E-06
Fluoranthene	1.26E-02	2.31E-05
Pyrene	1.09E-02	2.00E-05
Benzo(a)anthracene	3.56E-03	6.52E-06
Chrysene	3.33E-03	6.10E-06
Benzo(b)fluoranthene	3.50E-03	6.42E-06
Benzo(k)fluoranthene	3.50E-03	6.42E-06
Benzo(a)pyrene	2.01E-03	3.68E-06
Indeno(1,2,3-cd)pyrene	3.73E-04	6.84E-07
Dibenzo(a,h)anthracene	2.12E-04	3.89E-07
Benzo(g,h,i)perylene	2.87E-04	5.26E-07
Aroclor 1254	9.18E-03	1.68E-05
Silver	7.34E-07	1.35E-09

soil, and subsurface soil/waste material. These media were evaluated with regard to potential adverse effects to both human health and the environment. This assessment was conducted in the same manner and according to the same USEPA and NYSDEC guidance as the baseline risk assessment for LF-022.

4.4.1 Data Evaluation

Contaminants associated with the LF-023 site were detected in groundwater, surface water, sediment, surface soil, and subsurface soil/waste material. The site contaminants identified in Table 4-2 were chosen based on comparisons with background levels. These contaminants were further evaluated for their potential effects on human health and the environment. Based on this analysis, contaminants of potential concern were chosen for the baseline risk assessment.

4.4.1.1 Groundwater. Detected groundwater contaminants considered site-related include inorganics (i.e., aluminum, iron, manganese, and potassium), several VOCs (i.e., chloroform, vinyl chloride, chlorobenzene, benzene, ethylbenzene, and xylene), and naphthalene. Of these compounds, the VOCs and naphthalene are of most concern for humans. Vinyl chloride was detected in three of five samples at a maximum concentration of 31 μg/L. None of the inorganic compounds are particularly toxic to humans and all three are essential elements in the human diet. However, these elements were detected above their New York State Groundwater Quality Standards. Therefore, along with the VOCs and naphthalene, they represent contaminants of potential concern for groundwater. A summary of these data is in Table 4-5.

4.4.1.2 Surface Water/Sediment. Two surface water and two sediment samples were collected from seeps located at the northern edge of a red maple swamp located approximately 600 feet south of LF-023. Several metals were detected in these samples. However, the only contaminants determined to be site-related in surface water, and their maximum concentrations, were the following: aluminum (1.99 mg/L), arsenic (0.316 mg/L), iron (672 mg/L), and zinc (0.355 mg/L). The only site-related contaminants in sediment samples were PHCs. No VOCs or SVOCs were identified in either medium.

As discussed in the baseline risk assessment for LF-022, iron is not highly toxic at concentrations detected at this site (672 mg/L maximum). Iron is also an essential nutrient. Similarly, aluminum and zinc are not highly toxic at the detected concentrations. In fact, these compounds were selected as being site-related based

on comparisons with ecologically based Ambient Water Quality Criteria (AWQCs). Drinking water criteria for these compounds are based on aesthetic qualities (e.g., taste) rather than toxicity. Consequently, aluminum, iron, and zinc in the seeps south of LF-023 are contaminants of potential concern for ecological receptors only. Arsenic is the only surface water contaminant of potential concern for human health.

4.4.1.3 Subsurface Soil/Waste. Subsurface soil/waste samples were collected from test pits during the 1989 SI (E.C. Jordan Co., 1989). The only contaminant in subsurface fill considered to be site-related was 1,1-dichlorobenzene, which was detected once at 520 μg/kg.

4.4.1.4 Surface Soil. Composite surface soil samples were collected during a supplemental sampling round in November 1989. The landfill was divided into four quadrants and a composite sample consisting of 17 to 25 discrete samples was collected from each quadrant. These composite samples were analyzed for TCL SVOCs and pesticides/PCBs and TAL inorganics. One discrete sample from each quadrant was also analyzed for TCL VOCs. A summary of the composite surface soil data is in Table 4-11. This table presents the sitewide average concentration of each compound.

Contaminants of potential concern for surface soil are Aroclor-1254 (a PCB), silver, and various PAHs. Aroclor-1254 was detected in one of two duplicate samples from the southeast quadrant (SS-04) at a relatively low concentration (220 μg/kg). Using one-half the detection limit for the non-detect duplicate, a representative concentration of 0.15 μg/kg was calculated for this sample location.

PAHS were detected only in composite samples from the southeast and northwest quadrants. Seventeen separate PAH compounds were identified. The highest total concentration was 612 mg/kg in sample SS-04 from the southeast quadrant. No other SVOCs or VOCs were detected in surface soil.

Silver was the only inorganic compound detected in soil above typical background ranges (maximum of 12.8 mg/kg). Therefore, it represents the only inorganic contaminant of potential concern in surface soil.

4.4.2 Human Health Risk Assessment

The purpose of the baseline human health risk assessment of the LF-023 site is to determine if contamination at the site poses risks to human health, in the absence

TABLE 4-11
SUMMARY OF SURFACE SOIL DATA FOR LF-023

LF-022/LF-023 REMEDIAL INVESTIGATION REPORT
PLATTSBURGH AFB

CHEMICAL	*NORTHEAST* CONCENTRATION (mg/kg)	*NORTHWEST* CONCENTRATION (mg/kg)	*SOUTHWEST* CONCENTRATION (mg/kg)	*SOUTHEAST* CONCENTRATION (mg/kg)	WEIGHTED AVERAGE (mg/kg)
Silver	12.8	4.2 *	1 *	1 *	5
Fluoranthene	0.17 *	0.37	0.17 *	120	31.9
Pyrene	0.17 *	0.73	0.17 *	110	29.3
Benzo(a)anthracene	0.17 *	0.59	0.17 *	37	10
Chrysene	0.17 *	0.62	0.17 *	35	9.5
Benzo(b)fluoranthene	0.17 *	1	0.17 *	37	10.1
Benzo(k)fluoranthene	0.17 *	1	0.17 *	37	10.1
Benzo(a)pyrene	0.17 *	0.84	0.17 *	21	5.8
Napthalene	0.17 *	0.17 *	0.17 *	2	0.7
2-Methylnapthalene	0.17 *	0.17 *	0.17 *	1.4	0.5
Acenapthene	0.17 *	0.17 *	0.17 *	12	3.3
Dibenzofuran	0.17 *	0.17 *	0.17 *	6.6	1.9
Fluorene	0.17 *	0.17 *	0.17 *	12	3.3
Phenanthrene	0.17 *	0.17 *	0.17 *	144	38.2
Anthracene	0.17 *	0.17 *	0.17 *	26	7
Indeno(1,2,3-cd)pyrene	0.17 *	0.17 *	0.17 *	4.7	1.4
Dibenz(a,h)anthracene	0.17 *	0.17 *	0.17 *	2.8	0.9
Benzo(g,h,i)perylene	0.17 *	0.17 *	0.17 *	3.9	1.2
Aroclor-1254	0.08 *	0.08 *	0.08 *	0.15	0.1

NOTES:
* - Chemical not detected; value presented is 1/2 CRQL.
** - Values for Southeast Quadrant (SS-04) are averages of duplicate sample results, using 1/2 CRQL for non-detects.
Number of discrete samples per composite sample: Northeast SS-01 = 25; Northwerst SS-02 = 17; Southwest SS-03 = 22; Southeast SS-04 = 23

TAB4-11.WK1

of any remedial action. The baseline human health risk assessment contains the following components:

- Exposure Assessment
- Toxicity Assessment
- Risk Characterization

Collectively, these components describe (1) human populations that might come in contact with contaminants at the site and the pathways by which they could be exposed; (2) site contaminants that pose a potential risk to public health and the potential toxic effects and toxic potency of these contaminants; and (3) potential risks associated with contaminant exposure. This baseline risk assessment was conducted in accordance with the USEPA's "Risk Assessment Guidance for Superfund, Volume 1: Human Health Evaluation Manual (Part A)" (USEPA, 1989d) and the "Human Health Evaluation Manual, Supplemental Guidance: Standard Default Exposure Factors" (USEPA, 1991).

4.4.2.1 Exposure Assessment. An exposure assessment for LF-023 was conducted according to the procedures described in Subsection 3.4.2.1 of the LF-022 baseline risk assessment. Potential exposure pathways were identified for each contaminated medium and potential intakes were quantified for each complete exposure pathway. This assessment is described in the following paragraphs.

Identification of Potential Exposure Pathways. There are four potential sources of exposure associated with the LF-023 site: groundwater, surface water/sediments, subsurface soil/waste materials, and surface soil. However, based on current site uses, surface soil and surface water/sediments are the only media to which individuals may currently be exposed. A list of potential exposure pathways relevant to the LF-023 site is in Table 4-12, along with a designation of whether they will be evaluated in this risk assessment. The following paragraphs summarize the rationale for the selection of exposure pathways for each medium.

Groundwater. Various volatile contaminants and naphthalene were detected in groundwater downgradient of LF-023. These data are summarized in Table 4-5. Groundwater west of LF-023 is a source of potable water for the nearby mobile home development. However, contaminants related to LF-023 have not been detected in residential wells in this development, nor have contaminants been detected in monitoring wells located between LF-023 and the development. All hydrogeological data indicate that these wells are crossgradient of the site and are

TABLE 4-12
POTENTIAL EXPOSURE PATHWAYS FOR LF-023

LF-022/LF-023 REMEDIAL INVESTIGATION REPORT
PLATTSBURGH AFB

POTENTIALLY EXPOSED POPULATION	EXPOSURE ROUTE, MEDIUM AND EXPOSURE POINT	PATHWAY SELECTED FOR EVALUATION ?	REASON FOR SELECTION OR EXCLUSION
CURRENT CONDITIONS			
SECURITY POLICE	Direct contact with and ingestion of surface soil	Yes	Security police may contact surface soil during training exercises
CHILD TRESPASSER	Direct contact with and ingestion of surface soil	Yes	Children may contact surface soil while trespassing on the site
CHILD TRESPASSER	Direct contact with and ingestion of surface water/sediment	Yes	Children may contact surface water while exploring in the swamp
NEARBY RESIDENT	Inhalation of volatile and fugitive dust emissions	Yes	Residents of the mobile home park may be exposed to emissions
FUTURE CONDITIONS			
CHILD & ADULT RESIDENTS	Ingestion, direct contact, and inhalation of groundwater contaminants as a result of domestic use downgradient	Yes	Potential exists for groundwater to be used in the future as a source of potable water
CHILD & ADULT RESIDENTS	Incidental ingestion and direct contact with surface soil following residential development nearby	Yes	Future residential development could occur if the base were to close
CHILD & ADULT RESIDENTS	Inhalation of vapors and fugitive dust emissions following residential development nearby	Yes	Future residential development could occur if the base were to close
CHILD RESIDENT	Direct contact with and ingestion of surface water/sediment	Yes	Children may contact surface water while exploring in the swamp

TAB4-12.WK1

unlikely to be affected by site contaminants. The nearest downgradient residential well is south of the Salmon River over two miles south of the site. Therefore, there are no existing exposures to site-related groundwater contaminants.

The likelihood that a future water supply well will be developed on base downgradient of LF-023 is quite remote unless the base were to close. Nevertheless, the potential risks associated with exposure to groundwater contaminants were assessed as a potential future exposure pathway assuming that a well were placed downgradient of LF-023. As such, this scenario represents an extremely conservative exposure scenario. Because the contaminants of potential concern include volatile compounds, potential exposure routes include inhalation of contaminants during showering, as well as ingestion and direct contact. The potentially exposed population is assumed to be children and adult residents living directly downgradient of the landfill in the future.

Surface Soil. LF-023 is located within a controlled access area of the base. Only individuals possessing controlled area badges are allowed into the site. There are three subgroups of base personnel that may come in contact with the LF-023 site under current site conditions: security police, ROTC recruits, and civil engineering personnel. Of these groups, security police and ROTC recruits are the only people likely to come in actual contact with surface soil on a repeated basis. Both subgroups could be exposed to surface soil while involved in training exercises at the obstacle course in the northeast quadrant of the landfill. Civil engineering personnel may travel across the landfill but are unlikely to come in direct contact with soil. At this time, there are no routine activities conducted at the landfill that would cause other base personnel to come in contact with contaminated media. Therefore, exposure of on-base populations to LF-023 other than during training exercises is unlikely.

As noted, both security police and ROTC recruits could be exposed to surface soil contaminants via incidental ingestion and direct contact while participating in training exercises at the obstacle course. Of these two subgroups, the security personnel would be expected to be exposed to a greater extent. ROTC recruits typically train at LF-023 only twice in a year, while security police train three to four days per week for 12 weeks a year. Therefore, a security policeman was selected to represent the potentially exposed adult population associated with surface soil. These individuals may be exposed to surface soil to a greater extent at this site than normally assumed for adults because of the nature of required training activities. Therefore, the

exposure scenario developed to quantitatively estimate intake to this potentially exposed population reflects an increased magnitude of exposure.

As is the case with the LF-022 site, the only way for on-base or off-base civilian populations to access the LF-023 site is to enter from the west by climbing the boundary fence. The other sides of the landfill are bordered by controlled access areas. The site itself is considered limited access because of its proximity to these controlled access areas, and this area of the base is regularly patrolled. All individuals in this area of the base are subject to search. Consequently, trespassing by civilian populations is severely limited.

Of the three sites on the western border of the base (i.e., LF-022, LF-023, and FT-002), access to LF-023 by off-base populations is the easiest, as this site is closest to the nearby mobile home development. The relatively barren landfill surface is surrounded by pine trees. The only feature that would tend to attract teenagers or small children for recreation is the obstacle course. The frequency of trespassing on this site by children and/or teenagers is severely limited by regular patrols. There also are other nearby off-base areas where children can play. Therefore, it is unlikely that this site would be a preferred recreational area. The potential for exposure of the general public to contaminants at LF-023 is considered minimal.

Despite the fact that access to the landfill by either on-base or off-base populations is unlikely, a hypothetical exposure scenario was developed to assess potential health risks associated with surface soil contaminants. Because the site is located along the western boundary of Plattsburgh AFB, off-base populations are closest to the site. Therefore, an exposure scenario was developed (analogous to the trespassing scenario for LF-022) consisting of off-base children playing on the site. These children could be exposed to surface soil via the ingestion and direct contact exposure routes.

Landfill LF-023 is somewhat isolated from population centers and is patrolled regularly. Therefore, small children (younger than six years) are unlikely to wander onto the site. Children ages 6 to 16 are considered to be the age group with the greatest potential to trespass on the site. Because actual exposure is considered unlikely, the exposure scenario thus developed is considered to represent a conservative case.

As was the case for LF-022, the only scenario that might lead to increased exposure to surface soil would be base closure and subsequent residential development.

Therefore, an analogous exposure scenario was developed based on an individual being exposed as a result of living near the site. The USEPA default scenario for assessing residential exposure to surface soil was used, consisting of an individual from early childhood through early adulthood (USEPA, 1991).

Vapors and Fugitive Dusts In addition to direct contact with surface soil, individuals residing or working near the LF-023 site also could be exposed to surface soil contaminants by inhaling contaminants emitted from the landfill surface. As discussed in Subsection 4.3.6, contaminants may be released to the ambient air through volatilization and wind erosion of fugitive dusts.

Under current site conditions, the closest individuals that could potentially be exposed to vapors and dusts released from LF-022 are residents of the mobile home area located approximately 600 feet southwest of the site. Therefore, an exposure scenario was developed to assess potential risks to these individuals. Potential receptors include both children and adults. The concentrations of contaminants to which these individuals may be exposed is the sum of the concentrations resulting from volatile and fugitive dust emissions.

Potential inhalation exposure to vapors and fugitive dusts could increase in the future if residential development were to occur adjacent to LF-023. Consequently, a future residential inhalation scenario was developed analogous to the scenario developed for LF-022. Modeled air concentrations of volatile and fugitive dust emissions at a distance of 1 m were used to estimate the intake to a hypothetical resident living next to the site in the future.

Subsurface Soil/Waste Materials. The only contaminant of potential concern related to subsurface soil and waste materials is 1,1-dichlorobenzene, which was detected once at 520 μg/kg. The only way for individuals to be exposed to subsurface contaminants would be during an invasive operation requiring excavation, such as building construction or utility repair. There are no such activities taking place at the LF-023 site, nor are there plans to build at the site in the future. Therefore, exposure pathways associated with subsurface soils and waste materials were not evaluated. In the event further construction in this area takes place, a reevaluation of risks associated with the subsurface materials would be necessary.

Surface Water/Sediments. There are no surface water bodies on the LF-023 site. However, there is a state-identified wetland, unit PB-14, located south of the landfill. Two seep areas have been identified along the northern edge of this unit. As

indicated in the data evaluation, arsenic is the only contaminant of potential concern in surface water. No specific compounds of concern were detected in sediment at the seeps.

Although within the base boundary, this area is only about 200 feet east of the mobile home development. Therefore, children from this development could enter this area more readily than the site itself. An exposure scenario was developed based on exposure of small children/teenagers, the same population evaluated in the surface soil exposure pathway. These individuals could be exposed to surface water via incidental ingestion and direct contact while exploring in this area.

Potential exposure to surface water could increase in the future if residential development were to occur in the vicinity of the seeps. Therefore, a future exposure scenario was developed in which the same residential population is exposed but at a greater frequency.

Summary of Exposure Pathways. As a result of this exposure assessment, eight complete exposure pathways were identified as being relevant to LF-023 under both current and future site conditions:

Current Site Conditions

1. Incidental Ingestion of and Direct Contact with Surface Soil by a Security Policeman

2. Incidental Ingestion of and Direct Contact with Surface Soil by a Child Trespasser

3. Incidental Ingestion of and Direct Contact with Surface Water by a Child Trespasser

4. Inhalation of Vapors and Fugitive Dusts by a Nearby Resident

Future Site Conditions

1. Ingestion of, Direct Contact with, and Inhalation of Volatile Compounds from Groundwater by a Future Resident

2. Incidental Ingestion of and Direct Contact with Surface Soil by a Future Resident

3. Incidental Ingestion of and Direct Contact with Surface Water by a Future Child Resident

4. Inhalation of Vapors and Fugitive Dusts by a Future Resident

Quantification of Exposure. The intake of contaminants through these eight exposure pathways is calculated using a series of equations. These equations are described in more detail in Appendix N. The following paragraphs summarize the selection of exposure parameters for each identified exposure pathway.

Current Site Conditons

Incidental Ingestion and Direct Contact With Surface Soil - Security Police. While using the obstacle course at LF-023, security police could be exposed to surface soil via both incidental ingestion and direct skin contact. The exposure parameters for the security police using the obstacle course are as follows:

Exposed Population = Security Police

CS	=	chemical concentration in surface soil (mg/kg)
IR	=	200 mg/day (USEPA, 1989d)
AF	=	1.45 mg/cm^2 (USEPA, 1989d)
SA	=	8,620 cm^2 (USEPA, 1989d)
RAF	=	For ingestion: 1.0 (Assumption)
		For direct contact - organics: 0.1 (Assumption)
		For direct contact - inorganics: 0.01 (Assumption)
FI	=	100 percent (Assumption)
EF	=	48 days/year (4 days/week, 12 weeks/year)
ED	=	4 years
BW	=	70 kg (USEPA, 1989c)
AT	=	For carcinogens: 70 years x 365 days/year
		For noncarcinogens: 4 years x 365 days/year

Because security police using the obstacle course may be exposed to surface soil to a greater extent than adults engaged in normal activities, the soil ingestion rate (IR) used for this adult population is greater than that usually used to estimate soil ingestion by an adult. The rate of 200 mg/day is the same as that typically used for

small children. It is also assumed that the fraction of daily soil intake (FI) associated with exposure at LF-023 is 100 percent. The soil-skin adherence factor (AF) is a default value established by the USEPA (USEPA, 1989d).

The exposed surface area is the average total area of the hands, arms, and legs of adults. The exposure duration of four years is based on the average tour of duty for military personnel at Plattsburgh AFB. An exposure frequency of 48 days per year is based on the actual number of days spent on the obstacle course by security police. The RAF values are discussed further in Appendix O.

The chemical concentrations (CS) used to estimate intake by security police are based on the two data sets in Table 4-11: (1) the average concentration of each contaminant over the four quadrants, and (2) the concentration of each contaminant in the most contaminated quadrant (southeast).

The average over the entire landfill represents the concentration to which security police may be exposed if exposure were to occur in a random fashion across the entire landfill. The concentrations from the southeast quadrant (sample SS-04) represent a conservative estimate of the exposure concentration if personnel were to train only in this area. Security police are actually more likely to be exposed to surface soil in the northeast quadrant, the location of the obstacle course. However, except for silver, all contaminants of potential concern in this quadrant were reported as below the detection limit.

Incidental Ingestion and Direct Contact with Surface Soil - Child Trespasser. The other current surface soil exposure pathway evaluated in this risk assessment consists of children trespassing on the landfill. The exposure parameters for estimating intake via incidental ingestion and direct contact for this exposure pathway are as follows:

Exposed Population = Child Trespasser

CS	=	chemical concentration in surface soil (mg/kg)
IR	=	100 mg/day (USEPA, 1989d)
AF	=	1.45 mg/cm^2 (USEPA, 1989d)
SA	=	1,520 cm^2 (hands, forearms, and feet; USEPA, 1989c)
RAF	=	For ingestion: 1.0 (Assumption)
		For direct contact - organics: 0.1 (Assumption)
		For direct contact - inorganics: 0.01 (Assumption)
FI	=	100 percent (Assumption)

EF	=	5 days/year (Assumption)
ED	=	10 years (children age 6 to 16 years)
BW	=	38 kg (USEPA, 1989c)
AT	=	For carcinogens: 70 years x 365 days/year For noncarcinogens: 10 years x 365 days/year

These parameters are identical to those used for LF-022 for the trespassing scenario. The chemical concentrations (CS) used to estimate intake are shown in Table 4-11. As with LF-022, two sets of data were used to estimate intake: (1) the average concentration of each contaminant over the four quadrants, and (2) the concentration of each contaminant in the most contaminated quadrant (southeast).

The average over the entire landfill represents the concentration to which children are most likely to be exposed because exposure is likely occur in a random fashion. The only subarea of the site where children would preferentially explore would be the northeast quadrant, which contains the obstacle course. As indicated above, silver was the only contaminant or potential concern detected in this quadrant above the detection limit. The concentration from the southeast quadrant, therefore, represents a conservative estimate of the exposure concentration if children were to trespass only in this area.

Incidental Ingestion and Direct Contact With Surface Water - Child Trespasser. Children may be exposed to surface water via incidental ingestion and direct contact while exploring in the wetland south of LF-023. The following exposure parameters were used to estimate contaminant intake for this hypothetical population:

Exposed Population = Child Trespasser

CW	=	chemical concentration in surface water (mg/L)
IR	=	0.05 liter/hour (USEPA, 1989d)
SA	=	1,520 cm^2 (hands, forearms, and feet; USEPA, 1989c)
PC	=	For inorganics: 0.0008 cm/hour
RAF	=	For ingestion: 1.0 (Assumption)
ET	=	1 hour/day (Assumption)
EF	=	5 days/year (Assumption)
ED	=	10 years (children age 6 to 16 years)
BW	=	38 kg (USEPA, 1989c)
AT	=	For carcinogens: 70 years x 365 days/year For noncarcinogens: 10 years x 365 days/year

Most of the above parameters are identical to those used for the surface soil trespasser exposure pathway (i.e., EF, ED, RAF, SA, PC, and BW). The surface water ingestion rate (IR) is based on USEPA guidance (USEPA, 1989d). The exposure time (ET) of 1 hour/day reflects the limited amount of time a child might spend in one small seep area.

Inhalation of Volatile and Fugitive Dust Emissions - Nearby Resident. As indicated previously, the closest individuals that could potentially be exposed to vapors and dusts released from LF-022 are residents of the mobile home area located about 600 feet southwest of the site. The exposure parameters used to estimate inhalation intake for this scenario are listed below.

Exposed Population = Nearby Resident

CA	=	modeled chemical concentration in air at a distance of 200 m (mg/m^3)
RAF_{IH}	=	For volatile emissions: 1.0 (Assumption) For fugitive dusts: 0.75 (Assumption)
ET	=	16 hours/day (Assumption)
EF	=	175 days/year (USEPA, 1991)
AT	=	For carcinogens: 70 years x 365 days/year
<u>Child</u>		
IR	=	2.0 m^3/hour (USEPA, 1989c)
ED	=	6 years (children 1 to 6 years)
BW	=	16 kilograms (USEPA, 1989c)
AT	=	For noncarcinogens: 6 years x 365 days/year
<u>Adult</u>		
IR	=	1.4 m^3/hour (USEPA, 1989c)
ED	=	30 years (USEPA, 1991)
BW	=	70 kilograms (USEPA, 1989c)
AT	=	For noncarcinogens: 30 years x 365 days/year

This scenario is identical to the future residential inhalation exposure scenario developed for the LF-022 site except for the airborne contaminant concentrations. The concentrations in air (CA) used to estimate intake for this population are the modeled concentrations at a distance of 200 meters from the site.

Future Site Conditions

Ingestion of, Direct Contact With, and Inhalation of Volatile Compounds from Groundwater - Future Resident. As a result of the domestic use of groundwater downgradient of LF-023, a future resident could be exposed to contaminants via three exposure routes: (1) ingestion of water or beverages made with water, (2) dermal absorption during showering or bathing, and (3) inhalation of volatile compounds during showering. As indicated previously, both children and adult residents may be exposed to groundwater contaminants in the future. The exposure parameters for these two future populations are as follows:

Exposed Population = Future Resident

CW	=	maximum chemical concentration in drinking water (mg/liter)
CA	=	chemical concentration in air during a shower (mg/m^3)
RAF_{IG}	=	1.0 (Assumption)
RAF_{IH}	=	1.0 (Assumption)
PC	=	For chemicals with log K_{ow} > 2.0: 0.008 cm/hour For chemicals with log K_{ow} < 2.0: 0.0008 cm/hour
ET	=	12 minutes/day (USEPA, 1989d)
EF	=	350 days/year (USEPA, 1991)
AT	=	For carcinogens: 70 years x 365 days/year

<u>Child</u>

IR_{IG}	=	2 liters/day (USEPA, 1989d)
IR_{IH}	=	0.8 m^3/hour (USEPA, 1989c)
SA	=	7,220 cm^2 (whole body; USEPA, 1989c)
ED	=	6 years (children 1 to 6 years)
BW	=	16 kilograms (USEPA, 1989c)
AT	=	For noncarcinogens: 6 years x 365 days/year

<u>Adult</u>

IR_{IG}	=	2 liters/day (USEPA, 1991)
IR_{IH}	=	0.6 m^3/hour (USEPA, 1989d)
SA	=	18,150 cm^2 (whole body; USEPA, 1989c)
ED	=	30 years (USEPA, 1991)
BW	=	70 kilograms (USEPA, 1989c)
AT	=	For noncarcinogens: 30 years x 365 days/year

Most of the above parameters are default values established by the USEPA for the evaluation of exposure to drinking water. These include the following: exposure frequency (EF), exposure duration (ED), exposure time (ET; showering), body weight (BW), average daily intake of water (IR_{IG}), and inhalation rate while showering (IR_{IH}). The only parameters that are not default USEPA values are the relative absorption factor (RAF), the permeability constant (PC), and the chemical concentrations in water (CW) and air (CA). The RAF and PC are discussed further in Appendix O.

The maximum concentration of groundwater contaminants (CW) was used to estimate intake rather than the average to account for the uncertainty associated with the concentrations that might be present in a residential well downgradient of the landfill in the future. Groundwater data from the SI was not used in the risk assessment.

The chemical concentration in air (CA) during showering is based on the concentration of volatile compounds in groundwater and is calculated using partitioning equations developed by Foster and Chrostowski (1987). A description of these equations and the parameters involved in the calculations is presented in Appendix P. As with the ingestion and direct contact exposure routes, maximum groundwater concentrations were used as input to the shower model calculations.

Incidental Ingestion and Direct Contact With Surface Soil - Future Resident. This potential exposure pathway is identical to the future residential surface soil pathway developed for LF-022. The exposure parameters for this scenario are as follows:

Exposed Population = Future Resident

CS	=	chemical concentration in surface soil (mg/kg)
AF	=	1.45 mg/cm^2 (USEPA, 1989d)
RAF	=	For ingestion: 1.0 (Assumption)
		For direct contact - organics: 0.1 (Assumption)
		For direct contact - inorganics: 0.01 (Assumption)
FI	=	100 percent (Assumption)
EF	=	175 days/year (Assumption)
AT	=	For carcinogens: 70 years x 365 days/year

<u>Small Child</u>

IR	=	200 mg/day (USEPA, 1991)
SA	=	1,850 cm^2 (hands, arms, and feet; USEPA, 1989c)

ED	=	6 years (children 1 to 6 years; USEPA, 1991)
BW	=	16 kilograms (USEPA, 1989c)
AT	=	For noncarcinogens: 6 years x 365 days/year

Older Child/Adult

IR	=	100 mg/day (USEPA, 1991)
SA	=	2,980 cm^2 (hands, forearms, and feet; USEPA, 1989c)
ED	=	24 years (ages 7 to 30; USEPA, 1991)
BW	=	70 kilograms (USEPA, 1989c)
AT	=	For noncarcinogens: 24 years x 365 days/year

Incidental Ingestion and Direct Contact With Surface Water - Future Child Resident. The exposure parameters for this scenario are as follows:

Exposed Population = Future Child Resident

CW	=	chemical concentration in surface water (mg/liter)
IR	=	0.05 liter/hour (USEPA, 1989d)
SA	=	1,520 cm^2 (hands, forearms, and feet; USEPA, 1989c)
PC	=	For inorganics: 0.0008 cm/hour
RAF	=	For ingestion: 1.0 (Assumption)
ET	=	1 hour/day (Assumption)
EF	=	26 days/year (Assumption)
ED	=	10 years (children 6 to 16 years)
BW	=	38 kilograms (USEPA, 1989c)
AT	=	For carcinogens: 70 years x 365 days/year
		For noncarcinogens: 10 years x 365 days/year

This potential exposure pathway is identical to the surface water exposure scenario described above for current site conditions except for the frequency of exposure, which is assumed to be greater because of the increased accessibility of the swamp area following base closure. The point of exposure remains a small seep area in the swamp. Therefore, exposure frequency is still expected to be low. For the purposes of this assessment, a frequency of once per week during the warm months of the year was assumed.

Inhalation of Volatile and Fugitive Dust Emissions - Future Resident. The exposure parameters for this future exposure scenario are presented below:

Exposed Population = Future Resident

CA	=	modeled chemical concentration in air at a distance of 1 m (mg/m^3)
RAF_{IH}	=	For volatile emissions: 1.0 (Assumption) For fugitive dusts: 0.75 (Assumption)
ET	=	16 hours/day (Assumption)
EF	=	175 days/year (USEPA, 1991)
AT	=	For carcinogens: 70 years x 365 days/year

Child

IR	=	2.0 m^3/hour (USEPA, 1989c)
ED	=	6 years (children 1 to 6 years)
BW	=	16 kilograms (USEPA, 1989c)
AT	=	For noncarcinogens: 6 years x 365 days/year

Adult

IR	=	1.4 m^3/hour (USEPA, 1989c)
ED	=	30 years (USEPA, 1991)
BW	=	70 kilograms (USEPA, 1989c)
AT	=	For noncarcinogens: 30 years x 365 days/year

The parameters used in this scenario are identical to those in the evaluation of future inhalation exposure for LF-022.

4.4.2.2 Toxicity Assessment. A toxicity assessment for LF-023 was conducted according to the procedures described in Subsection 3.4.2.2 of the LF-022 baseline risk assessment. Toxicity values were identified from USEPA guidance for the contaminants of potential concern at LF-023. In Tables 4-13 and 4-14 are lists of the relevant oral and inhalation toxicity values for carcinogenic and noncarcinogenic effects.

The USEPA has derived oral cancer SFs for contaminants of potential concern at LF-023: arsenic, vinyl chloride, chloroform, benzene, benzo(a)pyrene and Aroclor-1254. The cancer SF for benzo(a)pyrene is, in fact, a value no longer officially approved by the USEPA because of concerns regarding the toxicological study upon which the value was based. In fact, some evidence exists to support a lower potency value for benzo(a)pyrene. However, because of the lack of a suitable alternative value, at this time, it is standard practice to use this value. In addition,

TABLE 4-13
ORAL TOXICITY DATA FOR LF-023
CONTAMINANTS OF POTENTIAL CONCERN

LF-022/LF-023 REMEDIAL INVESTIGATION REPORT
PLATTSBURGH AFB

CARCINOGENIC EFFECTS

COMPOUND	CANCER SLOPE FACTOR (mg/kg-day)-1	SOURCE	STUDY TYPE	WEIGHT OF EVIDENCE	TEST ANIMAL	CANCER TYPE
INORGANICS						
Arsenic	1.75 (1)	HEAST	DW	A	Human	Skin
VOLATILE ORGANICS						
Vinyl Chloride	1.9	HEAST	Diet	A	Rat	Lung
Chloroform	0.0061	IRIS	Drinking Water	B2	Rat	Kidney
Benzene	0.029	IRIS	Occupational	A	Human	Leukemia
SEMI-VOLATILE ORGANICS						
Benzo(a)anthracene	11.5	BaP (2)				
Chrysene	11.5	BaP				
Benzo(b)fluoranthene	11.5	BaP				
Benzo(k)fluoranthene	11.5	BaP				
Benzo(a)pyrene	11.5	SPHEM	Diet	B2	Mouse	Stomach
Indeno(1,2,3-cd)pyrene	11.5	BaP				
Dibenz(a,h)anthracene	11.5	BaP				
Benzo(g,h,i)perylene	11.5	BaP				
PCBS						
Aroclor-1254	7.7	IRIS	Diet	B2	Rat	Liver

NOTES:

1. The cancer SF for arsenic is based on a unit risk of 5E-05 (ug/L)-1.
2. The cancer SF for benzo(a)pyrene was used for all carcinogenic PAHs that lack chemical-specific values.

IRIS - Integrated Risk Information System, March 1991

SPHEM - Superfund Public Health Evaluation Manual, October, 1986

mg/kd-day = milligrams per kilogram body weight per day

TABLE 4-13, continued
ORAL TOXICITY DATA FOR LF-023
CONTAMINANTS OF POTENTIAL CONCERN

LF-022/LF-023 REMEDIAL INVESTIGATION REPORT
PLATTSBURGH AFB

NONCARCINOGENIC EFFECTS

COMPOUND	CHRONIC ORAL RfD (mg/kg-day)	SOURCE	STUDY TYPE	CONFIDENCE LEVEL	CRITICAL EFFECT	TEST ANIMAL	UNCERTAINTY FACTOR
INORGANICS	0.001	HEAST	DW		Keratosis and hyperpigmentaio	Human	UF = 1
Arsenic							
Silver	0.003	IRIS	Theraputic	Medium	Argyria	Human	UF = 2, L
VOLATILE ORGANICS							
Chloroform	0.01	IRIS	Toothpaste	Medium	Fatty cysts-liver	Dog	UF = 1,000, H,A,L
Vinyl Chloride	0.009	1,1-DCE (1)					
1,1-Dichloroethene	0.009	IRIS	Drinking Water	Medium	Hepatic lesions	Rat	UF = 1,000, H,A,L
Benzene	NA						
Chlorobenzene	0.02	IRIS	Capsule	Medium	Histepathologic changes-liver	Dog	UF = 1,000, H,A,S
Ethylbenzene	0.1	IRIS	Gavage	Low	Liver and kidney toxicity	Rat	UF = 1,000, H,A,S
Xylene	2	IRIS	Gavage	Medium	Hyperactivity, decreased body weight gain, mortaility	Rat	UF = 100, H,A
SEMI-VOLATILE ORGANICS							
Fluoranthene	0.04	IRIS	Gavage	Low	Nephropathy, increased liver weights, hematologic alterations	Mouse	UF = 3,000, H,A,S,D
Pyrene	0.03	IRIS	Gavage	Low	Kidney effects	Mouse	UF = 3,000, H,A,S,D
Benzo(a)anthracene	0.004	Naphthalene (2)					
Chrysene	0.004	Naphthalene					
Benzo(b)fluoranthene	0.004	Naphthalene					
Benzo(k)fluoranthene	0.004	Naphthalene					
Benzo(a)pyrene	0.004	Naphthalene					
Napthalene	0.004	HEAST	Gavage	NA	Decreased body weight gain	Rat	UF = 10,000
2-Methylnapthalene	0.004	Naphthalene					
Acenapthene	0.06	IRIS	Gavage	Low	Hepatotoxicity	Mouse	UF = 3,000, H,A,S,D
Dibenzofuran	NA						
Fluorene	0.04	IRIS	Gavage	Low	Hematologic alterations	Mouse	UF = 3,000, H,A,S,D
Phenanthrene	0.004	Naphthalene					
Anthracene	0.3	IRIS	Gavage	Low	No observed effects	Mouse	UF = 3,000, H,A,S,D

TAB443.WK1

TABLE 4-13, continued
ORAL TOXICITY DATA FOR LF-023
CONTAMINANTS OF POTENTIAL CONCERN

LF-022/LF-023 REMEDIAL INVESTIGATION REPORT
PLATTSBURGH AFB

NONCARCINOGENIC EFFECTS

COMPOUND	CHRONIC ORAL RfD (mg/kg-day)	SOURCE	STUDY TYPE	CONFIDENCE LEVEL	CRITICAL EFFECT	TEST ANIMAL	UNCERTAINTY FACTOR
SEMI-VOLATILE ORGANICS							
Indeno(1,2,3-cd)pyrene	0.004	Naphthalene					
Dibenz(a,h)anthracene	0.004	Naphthalene					
Benzo(g,h,i)perylene	0.004	Naphthalene					
PCBS							
Aroclor-1254	0.0001	LTHA					

NOTES:

1. The oral RfD for 1,1-dichloroethene (1,1-DCE) was used for vinyl chloride.
2. The oral RfD for naphthalene was used for all PAHs that lack chemical-specific values.

IRIS - Integrated Risk Information System, March 1991
HEAST - Health Effects Assessment Summary Tables, 4th Quarter 1990
LTHA - Long Term Health Advisory, Office of Drinking Water
mg/kd-day = milligrams per kilogram body weight per day
NA - not available

Uncertainty Factors (UF) of 10 are applied for each of the following uncertainties:
H = variation in human sensitivity
A = animal to human extrapolation
S = use of subchronic rather than chronic study
L = use of a LOAEL rather than a NOAEL
An additional UF of 1 to 10 may be applied to account for other uncertainties such as inadequacies in the data base (D) or the severity of the effect.

TABLE 4-14
INHALATION TOXICITY DATA FOR LF-023
CONTAMINANTS OF POTENTIAL CONCERN

LF-022/LF-023 REMEDIAL INVESTIGATION REPORT
PLATTSBURGH AFB

CARCINOGENIC EFFECTS

COMPOUND	CANCER SLOPE FACTOR (mg/kg-day)-1	SOURCE	STUDY TYPE	WEIGHT OF EVIDENCE	TEST ANIMAL	CANCER TYPE
VOLATILE ORGANICS						
Vinyl Chloride	0.295	HEAST	Inhalation	A	Rat	Liver
Chloroform	0.081	IRIS	Gavage	B2	Mouse	Liver
Benzene	0.035	IRIS (1)	Occupational	A	Human	Leukemia
SEMI-VOLATILE ORGANICS						
Benzo(a)anthracene	6.1	BaP (2)				
Chrysene	6.1	BaP				
Benzo(b)fluoranthene	6.1	BaP				
Benzo(k)fluoranthene	6.1	BaP				
Benzo(a)pyrene	6.1	SPHEM	Inhalation	B2	Hampster	Respiratory tract
Indeno(1,2,3-cd)pyrene	6.1	BaP				
Dibenz(a,h)anthracene	6.1	BaP				
Benzo(g,h,i)perylene	6.1	BaP				
PCBS						
Aroclor-1254	7.7	Oral (3)				

NOTES:

1. Cancer SF for benzene based on a unit risk of 1E-05 per $\mu g/m^3$.
2. The cancer SF for benzo(a)pyrene was used for all carcinogenic PAHs that lack chemical-specific values.
3. The oral cancer SF was used for PCBs in the absence of an inhalation value.

HEAST - Health Effects Assessment Summary Tables, 4th Quarter 1990

IRIS - Integrated Risk Information System, March 1991

SPHEM - Superfund Public Health Evaluation Manual, October, 1986

mg/kd-day = milligrams per kilogram body weight per day

TAB4-14.WK1

it is also standard practice to use this value for the other carcinogenic PAHs: (benzo(a)anthracene, benzo(b)fluoranthene, benzo(k)fluoranthene, benzo(g,h,i)perylene, chrysene, dibenzo(a,h)anthracene, and indeno(1,2,3-cd)pyrene, because of the lack of suitable chemical-specific values.

The oral cancer SF for arsenic presented in Table 4-13 is based on a drinking water unit risk value of $5x10^{-5}$ $(\mu g/L)^{-1}$. The caveer SF of 1.75 $(mg/kg\text{-}day)^{-1}$ is derived by assuming that the average individual drinks 2 liters of water per day and weighs 70kg.

The oral cancer SF used for Aroclor-1254 is based on a toxicologic study of the carcinogenic effects of Aroclor-1260. Aroclor is a trade name for PCBs, and the associated number denotes the degree of chlorination. The USEPA has recommended the Aroclor-1260 cancer SF be used for all mixtures of PCBs, including single compounds (IRIS, 1990).

The USEPA has derived inhalation cancer SFs for vinyl chloride, chloroform, beuzene, and benzo(a)pyrene. Like the oral value, the inhalation cancer SF for benzo(a)pyrene is also no longer approved by USEPA. However, it remains standard practice to use this value for all carcinogenic PAHs. A similar surrogate inhalation value for Aroclor-1254 is not available. Therefore, the oral cancer SF was used to estimate inhalation toxicity.

In terms of noncarcinogenic effects, oral RfD values could not be identified for many of the contaminants of potential concern at LF-023. Most of these compounds are PAHs. In the absence of chemical-specific values for individual PAHs, it is standard practice to use as a surrogate the RfD for naphthalene, the most toxic of the PAHs for which an RfD has been derived by USEPA.

No oral RfD could be identified for Aroclor-1254. However, a surrogate RfD was derived from the Longer-term Health Advisory (HA) developed by the USEPA Office of Drinking Water. HAs represent concentrations of chemicals in drinking water at which adverse noncarcinogenic health effects would not be expected to occur over a given period of exposure. The Longer-term HA is based on a period corresponding to 10 percent of a lifetime, or 7 years. The Longer-term HA for PCBs is 4 $\mu g/L$. By assuming the average adult ingests 2 liters of water per day and weighs 70 kg, a surrogate RfD of 0.0001 mg/kg-day was derived.

The USEPA has not developed inhalation RfD values for any contaminants of potential concern at LF-023. Therefore, the oral values were used to estimate inhalation toxicity.

In addition to slope factors and RfD values, Tables 4-13 and 4-14 also present the source of these values, and the study type used to determine these values. These values will be used along with the chemical intake estimates derived in the exposure assessment to estimate the potential risks to human health associated with the LF-023 site.

For in-depth discussion of the assumptions involved in deriving toxicity values, see Appendix O. This appendix also contains Toxicity Profiles for each contaminant of potential concern at LF-023. Toxicity Profiles describe the inherent toxic properties of the contaminants of potential concern for LF-023, and also discuss the toxicity values for each contaminant of potential concern.

4.4.2.3 Risk Characterization. Quantitative estimates of both carcinogenic and noncarcinogenic risks were calculated for LF-023 according to the procedures described in Subsection 3.4.2.3 of the LF-022 baseline risk assessment. Risk estimates were calculated for each contaminant of potential concern identified in the toxicity assessment and each complete exposure scenario identified in the exposure assessment.

Estimation of Risks. This risk assessment identified eight complete exposure pathways relevant to current and future conditions at the LF-023 site:

Current Site Conditions

1. Incidental Ingestion of and Direct Contact with Surface Soil by a Security Policeman

2. Incidental Ingestion of and Direct Contact with Surface Soil by a Child Trespasser

3. Incidental Ingestion of and Direct Contact with Surface Water by a Child Trespasser

4. Inhalation of Vapors and Fugitive Dusts by a Nearby Resident

Future Site Conditions

1. Ingestion of, Direct Contact with, and Inhalation of Volatile Compounds from Groundwater by a Future Resident

2. Incidental Ingestion of and Direct Contact with Surface Soil by a Future Resident

3. Incidental Ingestion of and Direct Contact with Surface Water by a Future Child Resident

4. Inhalation of Vapors and Fugitive Dusts by a Future Resident

The resulting risk estimates for each of these scenarios are presented in Tables 4-15, 4-16, and 4-17. The spreadsheets used to calculate these values are presented in Appendix N.

Current Site Conditions

Incidental Ingestion of and Direct Contact with Surface Soil - Security Police. Security policemen could be exposed to surface soil contaminants during training exercises involving the use of the obstacle course at LF-023. As indicated in Table 4-15, the carcinogenic risks associated with exposure to such individuals is estimated at $9x10^{-5}$ and $3x10^{-4}$ depending on the exposure point concentration used. The latter estimate is above the USEPA target risk range while the former is within the range. Virtually 100 percent of each of these risk estimates is attributable to carcinogenic PAHs in surface soil.

The lower of the two estimates is based on the sitewide average concentrations of contaminants. The upper estimate is based on the concentration detected in the southeast quadrant. Most of the obstacle course apparatus is actually located in the northeastern quadrant, in which no PAHs were detected. Therefore, these values represent conservative estimates of potential cancer risk. Of the two values, the most accurate estimate of cancer risk to this population is the value based on the sitewide average, because it is unlikely that the same individual would be exposed repeatedly to soil only in the southeast quadrant.

The Hazard Indices associated with this hypothetical exposure scenario are 0.07 and 0.3. Both of these estimates are below the USEPA target hazard index of 1.

TABLE 4-15
SUMMARY OF LF-023 SITE RISK ESTIMATES - SECURITY POLICE

LF-022/LF-023 REMEDIAL INVESTIGATION REPORT
PLATTSBURGH AFB

TYPE OF EFFECT	EXPOSURE ROUTE, MEDIUM AND EXPOSURE POINT	PATHWAY-SPECIFIC CANCER RISK OR HAZARD INDEX	TOTAL CANCER RISK OR HAZARD INDEX
CARCINOGENIC EFFECTS			
Site-wide Average	Direct contact with surface soil	8E-05	
	Ingestion of surface soil	1E-05	9E-05
Southeast Quadrant	Direct contact with surface soil	3E-04	
	Ingestion of surface soil	4E-05	3E-04
NONCARCINOGENIC EFFECTS			
Site-wide Average	Direct contact with surface soil	0.06	
	Ingestion of surface soil	0.01	0.07
Southeast Quadrant	Direct contact with surface soil	0.3	
	Ingestion of surface soil	0.05	0.3

TAB4RISK.WK1

TABLE 4-16
SUMMARY OF LF-023 SITE RISK ESTIMATES - CHILD TRESPASSER

LF-022/LF-023 REMEDIAL INVESTIGATION REPORT
PLATTSBURGH AFB

TYPE OF EFFECT	EXPOSURE ROUTE, MEDIUM AND EXPOSURE POINT	PATHWAY-SPECIFIC CANCER RISK OR HAZARD INDEX	TOTAL CANCER RISK OR HAZARD INDEX
CARCINOGENIC EFFECTS			
Site-wide Average	Direct contact with surface soil	6E-06	
	Ingestion of surface soil	3E-06	9E-06
Southeast Quadrant	Direct contact with surface soil	2E-05	
	Ingestion of surface soil	1E-05	3E-05
	Incidental ingestion of surface water	1E-06	
	Direct contact with surface water	3E-08	1E-06
		Total - Site-wide Average	1E-05
		Total - Southeast Quadrant	3E-05
NONCARCINOGENIC EFFECTS			
Site-wide Average	Direct contact with surface soil	0.002	
	Ingestion of surface soil	0.001	0.003
Southeast Quadrant	Direct contact with surface soil	0.01	
	Ingestion of surface soil	0.003	0.01
	Incidental ingestion of surface water	0.006	
	Direct contact with surface water	0.0001	0.006
		Total - Site-wide Average	0.009
		Total - Southeast Quadrant	0.02

TAB4RISK.WK1

TABLE 4-17
SUMMARY OF LF-023 SITE RISK ESTIMATES - FUTURE RESIDENT

LF-022/LF-023 REMEDIAL INVESTIGATION REPORT
PLATTSBURGH AFB

TYPE OF EFFECT	EXPOSURE ROUTE, MEDIUM AND EXPOSURE POINT	PATHWAY-SPECIFIC CANCER RISK OR HAZARD INDEX		TOTAL CANCER RISK OR HAZARD INDEX	
CARCINOGENIC EFFECTS		CHILD	ADULT	CHILD	ADULT
	Direct contact with groundwater	4E-07	1E-06		
	Ingestion of groundwater	6E-04	7E-04		
	Inhalation of volatiles - showering	5E-05	4E-05	7E-04	7E-04
Site-wide Average	Direct contact with surface soil	4E-04	6E-04		
	Ingestion of surface soil	3E-04	1E-04	7E-04	7E-04
Northwest Quadrant	Direct contact with surface soil	1E-03	2E-03		
	Ingestion of surface soil	1E-03	5E-04	2E-03	3E-03
	Incidental ingestion of surface water	2E-07			
	Direct contact with surface water	7E-06		8E-06	
	Inhalation of vapors and dusts	2E-04	1E-04	2E-04	1E-04
	Total: Site-Wide Average			2E-03	2E-03
	Total: Northwest Quadrant			3E-03	4E-03
	Total: Site-Wide Average			3E-03	
	Total: Northwest Quadrant			6E-03	
NONCARCINOGENIC EFFECTS		CHILD	ADULT	CHILD	ADULT
	Direct contact with groundwater	0.003	0.002		
	Ingestion of groundwater	0.9	0.2		
	Inhalation of volatiles - showering	0.3	0.06	1.2	0.3
Site-wide Average	Direct contact with surface soil	0.2	0.08		
	Ingestion of surface soil	0.2	0.02	0.4	0.1
Northwest Quadrant	Direct contact with surface soil	0.8	0.4		
	Ingestion of surface soil	1	0.09	2	0.5
	Incidental ingestion of surface water	0.0007			
	Direct contact with surface water	0.03		0.03	
	Inhalation of vapors and dusts	5	0.8	5	0.8
	Total: Site-Wide Average			7	1
	Total: Northwest Quadrant			8	2

TAB4RISK.WK1

Incidental Ingestion of and Direct Contact with Surface Soil - Child Trespasser. Potential risks to older children and teenagers associated with exposure to surface soil while trespassing on LF-023 were assessed despite the fact that trespassing in this area is unlikely. As indicated in Table 4-16, carcinogenic risks associated with this potential exposure pathway are $9x10^{-6}$, and $3x10^{-5}$, depending on the data set used. Each of these estimates is within the USEPA target risk range of 10^{-6} to 10^{-4}. Carcinogenic PAHs are responsible for essentially 100 percent of the risks associated with this surface soil exposure pathway as well.

The most accurate risk estimate for child trespassers is the lower of the two values ($9x10^{-6}$) because this number is based on sitewide average soil concentrations. As indicated in the Exposure Assessment, the average over the entire landfill represents the concentration to which children are most likely to be exposed because random exposure is likely. This value represents the potential cancer risk if children were to trespass on LF-023 for five days per year. Therefore, the estimated potential cancer risk of $9x10^{-6}$ is a conservative estimate.

The Hazard Indices associated with the child trespasser scenario are 0.03 and 0.01 depending on the data set. These values are both below the target Hazard Index of 1.

Incidental Ingestion and Direct Contact With Surface Water - Child Trespasser. In addition to trespassing on the landfill, children may also explore in the swamp south of LF-023. The potential risks associated with exposure to arsenic in seeps were estimated assuming that children would be exposed in this area for five days per year. These risk estimates are presented in Table 4-16.

The estimated cancer risk associated with exposure to arsenic in surface water is $1x10^{-6}$. This value is at the lower end of the USEPA target risk range. The estimated Hazard Index for this scenario is 0.006, which is below the target of 1. Both values represent conservative estimates as this area is somewhat isolated and an exposure frequency of 5 days/year may be an overestimate.

Inhalation of Vapors and Fugitive Dust Emissions - Nearby Resident. An evaluation of the potential risks associated with exposure to vapors and fugitive dust emissions on nearby populations was assessed. As presented in Subsection 4.3.6, airborne concentrations of surface soil contaminants were estimated at a distance of 200 m from the edge of the landfill. This corresponds to the approximate distance between LF-023 and the mobile home development to the southwest. The potential risks

associated with exposure to these contaminants were assessed using a conservative exposure model represented by a child and an adult resident of this mobile home development.

The cancer risk estimates associated with this potential exposure are $2x10^{-6}$ for the child receptor and $2x10^{-6}$ for the adult. The associated hazard indices are 0.04 and 0.006 for the child and adult, respectively. Both cancer risk estimates are within the USEPA target risk range while the two indices are below the target of 1.

Future Site Conditions

Ingestion of, Direct Contact with, and Inhalation of Volatile Compounds from Groundwater - Future Resident. Although groundwater immediately downgradient of LF-023 is not a source of drinking water, groundwater is used to the west (crossgradient) of the site by residents of a mobile home development. Groundwater downgradient of LF-023 is not likely to be used as a drinking water source in the future unless Plattsburgh AFB were to close. Nevertheless, the potential risks associated with exposure to groundwater contaminants as a result of use as a potable supply were assessed to evaluate the VOC contamination detected. Both a child and an adult receptor were evaluated. Because volatile compounds are present in groundwater, there are three potential routes of exposure to contaminants: ingestion, direct contact, and inhalation. These risk estimates are presented in Table 4-17.

As indicated in Table 4-17, the total carcinogenic risks to a hypothetical future resident associated with exposure to the maximum concentrations of groundwater contaminants are $7x10^{-4}$ for both the child and adult receptors. These risk estimates are above the target risk range established by USEPA. Most of these elevated risks are associated with the ingestion route of exposure, 85 percent for the child and 94 percent for the adult. Ninety-nine percent of each of these ingestion estimates is associated with vinyl chloride. In fact, 98 percent of the total cancer risks associated with exposure to groundwater contaminants via the three exposure routes is due to vinyl chloride.

The hazard indices associated with exposure to the maximum concentration of groundwater contaminants for ingestion, direct contact, and inhalation are 1.2 for the child and 0.3 for the adult. The former value is slightly above the USEPA target hazard index of 1.

Incidental Ingestion and Direct Contact with Surface Soil - Future Resident. The risks associated with exposure of a hypothetical future resident to contaminants in surface soil are presented in Table 4-17. Two sets of cancer and noncancer risk estimates are presented based on the two sets of surface soil data, site-wide average concentrations and concentrations from the most contaminated quadrant (southeast). Potential risks were also assessed separately for children and adults.

As indicated in Table 4-17, the cancer risks associated with a child being exposed to surface soil are $7x10^{-4}$ and $2x10^{-3}$, using the two surface soil data sets. The analogous cancer risks for an adult are $7x10^{-4}$ and $3x10^{-3}$. These values are all above the USEPA target cancer risk range. Essentially 100 percent of these elevated cancer risks are attributable to carcinogenic PAHs.

The associated hazard indices for a child are 0.4 and 1, while the hazard indices for an adult are 0.1 and 0.5. Of these four risk estimates, are all below the USEPA target of 1 except the hazard index for a child based on the surface soil concentrations within the southeast quadrant. Seventy percent of this elevated hazard index is attributable to four PAHs, phenanthrene (40 percent), benzo(a)anthracene (10 percent), benzo(b)fluoranthene (10 percent), and benzo(k)fluoranthene (10 percent). As indicated previously, risk estimates based on the concentrations within the most contaminated quadrant represent conservative estimates because is the unlikely that an individual would be exposed to surface soil only within this one quadrant.

Incidental Ingestion and Direct Contact With Surface Water - Future Child Resident. The potential risks associated with exposure to surface water were assessed based on the same older child/teenager population used under current site conditions. The only difference was an increase in the frequency of exposure based on the assumption that the base might close. The cancer and noncancer risk estimates for this exposure pathway are presented in Table 4-17. As indicated, the estimated cancer risk is $8x10^{-6}$. This value is within the USEPA target cancer risk range. The estimated hazard index is 0.03, which is below the target of 1.

Inhalation of Vapors and Fugitive Dust Emissions - Future Resident. An evaluation of the potential risks associated with exposure to vapors and fugitive dust emissions on future populations was assessed assuming the base were to close and houses were built adjacent to LF-023. As presented in Subsection 4.3.6, airborne concentrations of surface soil contaminants were estimated at a distance of 1 m from the edge of the landfill. The potential risks associated with exposure to these contaminants were

assessed using a conservative exposure model represented by a child and an adult resident living immediately adjacent to the landfill.

The cancer risk estimates associated with this exposure pathway are $2x10^{-4}$ for the child and $1x10^{-4}$ for the adult. Both values are above the target risk range established by the USEPA. The corresponding hazard indices for the child and adult receptors are 5 and 0.8, respectively. The former hazard index is above the USEPA target of 1.

Combination of Exposure Pathways. Following USEPA guidance for combining exposure pathways, there are two potentially exposed populations for which exposure pathways may be combined for LF-023: (1) a child trespasser under current site conditions, and (2) a future resident (child and adult).

Two exposure pathways may be combined for the child trespasser population: (1) incidental ingestion of and direct contact with surface soil, and (2) incidental ingestion of and direct contact with surface water. The combined risk estimates are presented in Table 4-16. The combination of these pathways results in a total site cancer risk for the child trespasser population of $1x10^{-5}$ or $3x10^{-5}$, depending on which surface soil data sets are used. These cancer risks are within the USEPA target cancer risk range of 10^{-6} to 10^{-4}. The corresponding total site hazard indices are 0.009 and 0.02, both of which are below the USEPA target hazard index of 1.

There are a total of four exposure pathways that may be combined for a hypothetical future resident: (1) incidental ingestion of, direct contact with, and inhalation of volatiles from groundwater, (2) incidental ingestion of and direct contact with surface soil, (3) incidental ingestion of and direct contact with surface water, and (4) inhalation of vapors and fugitive dusts. With the exception of the surface water pathway, which is applicable only to the child receptor, these pathways may be combined for the child and adult. In addition, if one assumes that the child and adult receptors in these scenarios represent the same individual at different stages of development, as was done for LF-022, then the total site cancer risks for the child and adult may be combined into one estimate for a future resident population. These combined risk estimates are presented in Table 4-17.

Combining the cancer risk estimates for the four child exposure scenarios results in total site cancer risks of $2x10^{-3}$ or $3x10^{-3}$ (based on the two surface soil data sets). The combined cancer risk estimates for the adult are $2x10^{-3}$ and $4x10^{-3}$. Combining these two sets of estimates into a single set results in total site cancer risks for a

hypothetical future resident of $3x10^{-3}$ or $6x10^{-3}$. Both values are above the USEPA target risk range.

All of the cancer risk estimates that were used in these combined values were either above or within the USEPA target risk range. However, the majority of the total site risk may be attributable (about equally) to the groundwater and surface soil pathways. As indicated previously, most of the cancer risk associated with exposure to groundwater is attributable to vinyl chloride while most of the risk associated with surface soil is attributable to carcinogenic PAHs.

The combined total site hazard indices for the child receptor are 7 or 8 depending on which surface soil data set is used. The combined hazard indices for the adult are 1 and 2. Of these, only the hazard index for the adult receptor that incorporates the surface soil scenario based on the site-wide averages is below the USEPA target of 1. All other are above the target hazard index. For the child receptor, the majority of the elevated hazard index is attributable to the inhalation of vapors and dust (71 or 63 percent).

Uncertainties and Limitations in Risk Assessment. The interpretation of these risk estimates is subject to a number of uncertainties as a result of the multiple layers of conservative assumptions inherent in risk assessment. All quantitative estimates of risk are based on numerous assumptions, most intended to be protective of public health (i.e., conservative). As such, risk estimates are not truly probabilistic estimates of risk, but rather conditional estimates given a series of conservative assumptions about exposure and toxicity.

In general, sources of uncertainty can be categorized into site-specific factors and toxicity assessment factors. A thorough discussion of all potential sources of uncertainty in this risk assessment is beyond the scope of this report. However, a summary of potential sources relevant to the LF-023 site, and the likely direction of their effect (i.e., to overestimate or underestimate risks), is presented in Table 4-18.

The most significant source of uncertainty in this risk assessment is the likelihood of exposure pathways. The elevated risks calculated here indicate that future residents of these homes might be at an increased risk of developing cancer or other systemic effects as a result of exposure to contaminants at this site. However, for such individuals to be at an increased risk, Plattsburgh AFB would have to close and residential housing would have to be built adjacent to LF-023. In addition, residents of these homes would have to install private wells as their source of potable water.

TABLE 4-18
POTENTIAL SOURCES OF UNCERTAINTY FOR LF-023

LF-022/LF-023 REMEDIAL INVESTIGATION REPORT
PLATTSBURGH AFB

Potential Source	Direction of Effect	Justification
Likelihood of exposure pathways	Over-estimate	Pathways may not actually occur (e.g., trespassing, future resident).
Lack of consideration of degradation of chemicals.	Under-estimate	Risk estimates are based on recent chemical concerntations. Concentration will tend to decrease with time as a result of degradation processes.
Exposure assumptions (frequency, duration and intensity).	Over-estimate	Parameters selected are conservative estimates of exposure.
Limited analytical data set	Unknown	Few samples were collected for surface soil and surface water. Concentrations detected may not represe concentrations to which people might be exposed.
Absorption of soil contaminants through the skin.	Over-estimate	Dermal absorption of chemicals is a function of the length of actual skin contact. Contact at the site may be insufficient to result in the amount of absorption assumed.
Extrapolation of animal toxicity data to humans.	Unknown, probably over-estimate	Animals and humans differ with repect to absorption, metabolism, distribution, and excretion of chemicals. The magnitude and direction of the difference will vary with each chemical. Animal studies typically involve high-dose exposures, whereas humans are exposed to low doses in the environment.

TAB4-18.WK1

TABLE 4-18
POTENTIAL SOURCES OF UNCERTAINTY FOR LF-023

LF-022/LF-023 REMEDIAL INVESTIGATION REPORT
PLATTSBURGH AFB

Potential Source	Direction of Effect	Justification
Use of linearized, multi-stage model to derive cancer slope factors.	Over-estimate	Model assumes a non-threshold, linear at low dose relationship for carcinogens. Many compounds induce cancer by non-genotoxic mechanisms Model results in a 95 % upper confidence limit of the cancer risk. The true risk is unlikely to be higher and may be as low as zero.
Summation of effects (cancer risks and hazard indices) from multiple substance.	Unknown	The assumption that effects are additive ignores potential synergistic and/or antagonistic effects. Assumes similarity in mechanism of action, which is not the case for many substances. Compounds may induce tumors or other toxic effects in different organs or systems.
Use of uncertainty factors in the derivation of reference doses.	Unknown	Ten-fold uncertainty factors are incorporated to account for various sources of uncertainty (animal to human extrapolation, protection of sensitive human populations, extrapolation from subchronic to chronic data, and use of LOAELS rather than NOAELs). Although some data seem to support the ten-fold factor, its selection is somewhat arbitrary.

TAB4-18.WK1

Given the unlikely nature of these events, all risk estimates based on this future resident scenario reflect "worst-case" conditions.

4.4.3 Habitat-Based Environmental Risk Assessment

The purpose of the Habitat-Based ERA for LF-023 is to define potential ecological effects resulting from exposure to chemicals in environmental media at the site. The ERA for LF-023 contains the same elements as the ERA for LF-022:

- Ecological Exposure Assessment
- Hazard Identification
- Ecological Risk Characterization
- Uncertainties

As with LF-022, the ERA for LF-023 was conducted in accordance with federal and state guidance where practicable. Potential ecological receptors of chemical contamination at LF-023 are identified in Subsection 4.1.7.

4.4.3.1 Ecological Exposure Assessment. The purpose of the ecological exposure assessment is to evaluate the potential for exposure to site-related chemicals at LF-023. This involves identification of actual or potential exposure routes to receptors (identified in the Description of the Existing Environment in Subsection 4.1.7) and evaluation of the magnitude of exposure to aquatic and terrestrial organisms. In this subsection, exposure concentrations are estimated for each receptor via each pathway. This exposure information is used with the toxicological information in Subsection 4.4.3.2 to evaluate ecological risk in the ecological risk characterization (Subsection 4.4.3.3).

Terrestrial organisms may be exposed to chemicals present in surface soils through several exposure pathways. No exposure pathways exist for groundwater or subsurface soil at the site because terrestrial organisms are not expected to come in contact with subsurface media (i.e. below approximately 2 feet depth) because no prey exist in subsurface areas. However, terrestrial organisms may be exposed to chemicals in seeps receiving groundwater discharge from the landfill in wetland unit PB-14 south of the landfill. There are no aquatic habitats on the site, and wetland PB-14 is not expected to support fish because standing water is not present throughout the year. However, aquatic invertebrates may live in the wetland and therefore might be receptors of groundwater discharging to the wetland.

Analytical data used in the ecological exposure assessment consist of data for surface soil and seep surface water samples discussed in Subsection 4.4.1. Surface soil data, which consist of four composite samples collected from four quadrants on the site, are summarized by quadrant (see Table 4-11). Additionally, a sitewide weighted average concentration of each chemical is presented.

Surface water and sediment samples were collected from two seep areas south of the site: SW-23-001 and SW-23-002. Sample SW-23-002 is located on the northern edge of wetland unit PB-14, and was the only seep sample used in the exposure assessment because all the site-related contaminants for surface water were detected in it. The only site-related contaminant detected in sample SW-23-001 was iron, present at a much lower concentration than in SW-23-002. The only site-related contaminant detected in sediments, PHCs, was not evaluated in the ecological evaluation because there are no toxicity data available for PHCs.

On-Site Exposures. Exposure to site-related contaminants in surface soil may occur via direct contact with and ingestion of surface soils, and ingestion of biota with bioaccumulated chemicals in their tissues. Because of the lack of species-specific data concerning chemical uptake via dermal contact and the inherent variability in uptake rates among species, this exposure pathway was not evaluated. The following five indicator species were selected to represent exposures to terrestrial organisms via ingestion of food and soil:

- White-footed mouse (*Peromyscus leucopus*), small mammal, omnivore
- Wood thrush (*Hylocichla mustelina*), small bird, omnivore
- Garter snake (*Thamnophis s. sirtalis*), herptile, carnivore
- Red fox (*Vulpes vulpes*), predatory mammal, omnivore
- Red-tailed hawk (*Buteo jamaicensis*), predatory bird, carnivore

These species were selected because they are representative of exposures to the range of mammals, birds, and herpetofauna (reptiles and amphibians) that may occur at the site. They are relatively common species in the vicinity of Plattsburgh AFB selected from the species lists in Appendix J, Tables J-1 through J-4, based on the habitats at the site and feeding preferences. Some of these species (e.g., red fox, red-tailed hawk) have been observed at Plattsburgh AFB during the remedial investigation. As shown, these species represent small mammals, small birds, herpetofauna, predatory mammals, and predatory birds. Modeling of exposures to rare species was not performed because no rare, threatened, or endangered species have been identified at Plattsburgh AFB (see Section 4.1.7).

Small mammals and birds are primary consumers, with most of their diet consisting of plants and decomposers (i.e., soil invertebrates). Herpetofauna may also be considered primary consumers, although a greater proportion of their diet may consist of animals. Predatory mammals may be primarily carnivorous, but subsist on plant matter when animal food is lacking. Predatory birds are expected to rely almost entirely on animal matter.

Exposures to these organisms were estimated using spreadsheet food web models, (see Appendix J, Table J-10). The documentation and derivation of exposure parameters used in these models are presented in Appendix J, Table J-6, while bioaccumulation data for site-related chemicals at LF-023 used in the models is presented in Appendix J, Table J-11.

A composite sample of surface soils was collected in each of the four quadrants of LF-023: northeast (NE), northwest (NW), southwest (SW), and southeast (SE). The locations of the NE, NW, SW, and SE quadrants (where surface soil samples SS-01, SS-02, SS-03, and SS-04 were collected, respectively) are shown in Figure 4-12. Each composite sample represents an average concentration of the 17 to 25 subsamples collected in each quadrant.

Modeling of acute and chronic exposures was performed separately for each quadrant based on results of this sampling (see Table 4-11). The concentration reported for each sample was used in the chronic food web models, as each sample represents the average concentration in 17 to 25 subsamples. A theoretical maximum concentration was calculated for each chemical in each sample by multiplying the reported concentration by the number of subsamples; these values were used to represent acute exposure to a "hot spot" in the acute exposure models. Additionally, food web modeling was performed for the entire site using a weighted average concentration (calculated by summing the reported concentration multiplied by number of subsamples for each composite sample and dividing by the total number of subsamples from all four composite samples).

Area is important in modeling chronic exposures to ecological receptors because of differences in home range sizes for different species. Organisms with large home ranges (such as the red fox) will spend less time foraging in contaminated areas than will organisms with small home ranges (such as the white-footed mouse), which may spend most or all their time in contaminated areas. For modeling chronic exposure, the areas of the NE, NW, SW, and SE quadrants (5.7, 3.9, 5.1, and 5.3 acres, respectively) were used. Area was not incorporated into the acute exposure models

because, while home range affects the probability of acute exposure, it is not a factor affecting the magnitude of exposure.

Off-Site Exposures. Exposure to chemicals detected in wetland seeps may occur via ingestion of seep surface water and sediment and contaminated prey by terrestrial organisms, or by direct contact by aquatic invertebrates. As performed for surface soil exposure, average and maximum surface water concentration data are typically used to assess chronic and acute exposures, respectively. However, in this case, only one sample (SW-023-02) was used in the ecological risk assessment. This sample was used to evaluate chronic and acute effects under two possible scenarios: (1) chronic exposure--if the concentration in SW-023-02 is representative of surface water concentrations along the northern edge of the wetland; and (2) acute exposure--if the concentration in SW-023-02 represents a localized hot spot (which appears likely given that the samples were collected from a seep).

The raccoon (*Procyon lotor*) was chosen as a representative omnivorous organism for modeling of acute and chronic exposures to arsenic and zinc via food, surface water, and sediment ingestion in the wetland. The exposure model includes sediment exposure because, even though they were not selected as site-related contaminant for sediments, arsenic and zinc in sediments will nonetheless contribute to overall exposure. Exposures to aluminum and iron, two of the site-related contaminants, were not modeled because these chemicals are considered essential elements for terrestrial organisms.

Modeling of exposures to aquatic invertebrates was not necessary because the reported concentrations of site-related contaminants in surface water sample SW-023-02 are representative of exposure concentrations for aquatic organisms. The concentration of site-related contaminants used in the exposure assessment, which are an average of the reported values for two duplicates of SW-023-02, are:

Chemical	Concentration (μg/L)
Aluminum	1990
Arsenic	316
Zinc	355

As described previously, these values were used to represent both acute and chronic exposures. Aluminum was included for aquatic organism exposure because it is toxic to aquatic organisms. Iron was not included for two reasons, even though it was

reported at concentrations above the AWQC of 1 mg/L. First, according to the Water Quality Criteria Summary (USEPA, 1986e), swamp waters (such as those in the wetland south of LF-023) may contain iron at concentrations of several mg/L but in a form that has little effect on aquatic life. Second, the samples collected at SW-023-01 were not filtered and were reportedly turbid, indicating that reported iron concentrations may have been due to the presence of suspended sediment or colloidal matter rather than dissolved iron.

The results of the food web modeling are expressed as a PDE in mg/kg body weight (BW)/day of each chemical under each exposure scenario (see Table J-10 in Appendix J). The PDE for each modeled receptor species is calculated by multiplying each predicted prey species tissue concentration by the proportion of that prey type in the diet, summing these values, and multiplying by the receptor species' Site Foraging Frequency (SFF). The PDE is represented by the following equation:

$$PDE = [\sum_{1 \to n} P_1 \times T_1 + P_2 \times T_2 + \ldots P_n \times T_n] \times SFF \times \frac{IR}{BW}$$

where
:

PDE	=	Potential Dietary Exposure (mg/kgBW/day)
P_n	=	Percent of prey item **n** ingested
T_n	=	Tissue concentration in prey item **n** (mg/kg), calculated by multiplying the chemical concentration in soil (or for ingestions of primary consumers, the PDE for the primary consumer) by a bioaccumulation factor
SFF	=	Site Foraging Frequency; calculated by dividing the area of the site or quadrant (acres) by the species home range (acres). Set equal to 1.0 for acute exposure scenario.
IR	=	Food Ingestion Rate (kg/day)
BW	=	Body Weight (kg)

These PDE estimates, which are directly comparable to available toxicological test data, are used in conjunction with toxicological data in Subsection 4.4.3.2 to evaluate ecological risks in the risk characterization (Subsection 4.4.3.3).

4.4.3.2 Hazard Identification. In the Hazard Identification, the toxicity of each site-related chemical is described. Information necessary to evaluate the potential effects to receptors at the exposure concentrations determined in Subsection 4.4.3.1 consists of published laboratory-derived toxicological data and threshold toxicity values developed using extrapolation techniques. Based on these data, RTVs are developed for terrestrial and aquatic organisms that represent a toxic threshold concentration in soil, water, or food.

Toxicity data for terrestrial receptors consist of acute and chronic ingestion studies. Terrestrial toxicologic data for site-related chemicals used in this ERA are presented in Appendix J, Table J-12. From the toxicological data set, the lowest acute or chronic value for each type of receptor (e.g., small mammal and small bird) was selected as the acute or chronic RTV, respectively. Because the lowest toxicity values were selected, the RTVs should be protective of the most sensitive species tested. The RTVs for terrestrial organisms for are indicated as shaded values in Appendix J, Table J-12.

Generally, the LOAEL was used as the chronic RTV. In cases where no chronic data are available, two factors were applied to the acute LD_{50} (i.e., single dose lethal to 50 percent of the test organisms). These factors are: (1) a factor of 0.2 for extrapolating from the oral LD_{50} to a value expected to protect 99.9 percent of the population against acute effects (USEPA, 1986d); and (2) a factor of 0.1 for extrapolating from acute to chronic values (the acute-chronic ratio for many chemicals is approximately 10).

Information available to evaluate toxicity to aquatic organisms includes AWQC, laboratory-derived toxicity data, and toxicity threshold values developed using extrapolation techniques (acute-chronic ratios and surrogate chemicals). These sources were used to generate acute and chronic RTVs for each site-related chemical in surface water. The RTVs for aquatic organisms are listed in the aquatic risk assessment in Appendix J, Table J-16.

Acute and chronic AWQC are available for all site-related contaminants in surface water (i.e., aluminum, arsenic, and zinc) and were selected as the acute and chronic RTVs, respectively. The AWQC are guidelines developed under the Clean Water Act for use in permitting wastewater discharges to surface water. These criteria specify the concentration of a compound in ambient water which, if not exceeded, should protect most (95 percent) species of aquatic life and their uses. The AWQC are derived from both plant and animal data and are developed to protect the types

of organisms necessary to support an aquatic community. The AWQC consider both acute (short-term) and chronic (long-term) effects. The acute and chronic criteria should not be exceeded by the 1-hour and four-day average chemical concentration, respectively, more than once every three years.

4.4.3.3 Ecological Risk Characterization. This subsection characterizes risks to terrestrial and aquatic receptors potentially exposed to site-related chemicals in surface soil at LF-023 and to surface water in wetland PB-14 south of the site. The magnitude of risk depends on the nature, duration, and frequency of exposure to the chemicals and on the characteristics of the exposed populations. This exposure information, detailed in Subsection 4.4.3.1, combined with the appropriate concentration-response toxicity data in Subsection 4.4.3.2, is the basis for the risk characterization.

The evaluation of risks to terrestrial and aquatic biota is presented in the following Appendix J tables: Table J-13 (risks to terrestrial organisms associated with surface soil exposure); Table J-14 (risks to raccoon ingesting water, sediment, and food from the seep in the wetland); and Table J-15 (risks to aquatic organisms in the wetland). The results of the risk assessment are summarized in Tables 4-19 and 4-20 for surface soil and seep exposures, respectively.

Risks to terrestrial biota exposed to surface soils at LF-023 were evaluated by comparing the acute (theoretical maximum) and chronic (average) PDE for each indicator species estimated in exposure scenarios with the acute and chronic RTVs, respectively (see Table J-13 in Appendix J). By dividing the PDE by the appropriate RTV, a Hazard Index is calculated. The Hazard Index for the individual chemicals are then summed to yield a summary Hazard Indices. The chronic and acute summary Hazard Indexes for each indicator species exposed to surface soil are presented in Table 4-19. Risks to organisms exposed to chemicals in the seep at the northern edge of the wetland (i.e., raccoon and aquatic invertebrates) are summarized in Table 4-20. Summary Hazard Index values were again calculated by dividing the exposure concentration by the appropriate RTV for each chemical and summing the individual Hazard Index values.

Adopting a technique developed for the ecological evaluation of pesticides (USEPA, 1986d) yields the following relative Hazard Index ranking:

$HI < 0.1$	No Adverse Effects
$0.1 \leq HI < 10$	Possible Adverse Effects

TABLE 4-19
SUMMARY OF ECOLOGICAL RISK ASSESSMENT FOR SURFACE SOILS AT LF-023

LF-022/LF-023 REMEDIAL INVESTIGATION REPORT
PLATTSBURGH AFB

INDICATOR SPECIES	CHRONIC SUMMARY HAZARD INDEX BY AREA				
	Northeast	Northwest	Southwest	Southeast	Entire Site
White-footed Mouse	3.1×10^{-2}	1.9×10^{-2}	7.2×10^{-3}	9.0×10^{-1}	2.5×10^{-1}
Wood Thrush	2.5×10^{-2}	2.2×10^{-2}	1.1×10^{-2}	$1.1 \times 10^{+0}$	3.1×10^{-1}
Garter Snake	1.2×10^{-2}	1.7×10^{-2}	1.1×10^{-2}	$1.4 \times 10^{+0}$	3.8×10^{-1}
Red Fox	8.9×10^{-5}	6.8×10^{-5}	4.3×10^{-5}	5.4×10^{-3}	5.7×10^{-3}
Red-Tailed Hawk	8.1×10^{-5}	5.2×10^{-5}	2.8×10^{-5}	4.2×10^{-3}	4.4×10^{-3}

INDICATOR SPECIES	ACUTE SUMMARY HAZARD INDEX BY AREA				
	Northeast	Northwest	Southwest	Southeast	Entire Site*
White-footed Mouse	7.9×10^{-2}	3.3×10^{-2}	1.6×10^{-2}	$2.1 \times 10^{+0}$	$2.1 \times 10^{+0}$
Wood Thrush	6.2×10^{-2}	3.7×10^{-2}	2.4×10^{-2}	$2.5 \times 10^{+0}$	$2.5 \times 10^{+0}$
Garter Snake	3.0×10^{-2}	3.6×10^{-2}	2.5×10^{-2}	$3.2 \times 10^{+0}$	$3.2 \times 10^{+0}$
Red Fox	9.8×10^{-3}	7.4×10^{-3}	4.6×10^{-3}	6.0×10^{-1}	6.0×10^{-1}
Red-Tailed Hawk	1.8×10^{-2}	1.1×10^{-2}	6.1×10^{-3}	9.3×10^{-1}	9.3×10^{-1}

NOTES:

* Acute summmary Hazard Index for entire site is the highest Hazard Index of the four quadrants.

RELATIVE HAZARD RANKING (USEPA, 1986d):

HI < 0.1	No Adverse Effects
$0.1 \leq$ HI < 10	Possible Adverse Effects
HI ≥ 10	Probable Adverse Effects

LF23_SS.TAB

TABLE 4-20
SUMMARY OF ECOLOGICAL RISK ASSESSMENT FOR WETLAND PB-14

LF-022/LF-023 REMEDIAL INVESTIGATION REPORT
PLATTSBURGH AFB

INDICATOR SPECIES	CHRONIC SUMMARY HAZARD INDEX	
	Acute	Chronic
Raccoon	3.1×10^{-3}	3.1×10^{-2}
Aquatic Invertebrates	$6.5 \times 10^{+0}$	$2.8 \times 10^{+1}$

NOTES:

RELATIVE HAZARD RANKING (USEPA, 1986d):

HI < 0.1	No Adverse Effects
$0.1 \leq$ HI < 10	Possible Adverse Effects
HI ≥ 10	Probable Adverse Effects

LF23_WET.TAB

HI ≥ 10 Probable Adverse Effects

This ranking scheme applies to ecological risk evaluation, and does not pertain to human health evaluation. The scheme reflects effects to individual organisms, and does not indicate potential population-level effects. In many cases, acute or chronic effects to individuals may occur with little impact on population growth, stability, or structure. However, as the number of organisms experiencing acute or chronic effects increases, so does the probability that population-level effects will occur. Because the number of affected individuals presumably increases with increasing Hazard Index values, the likelihood that population-level effects are occurring is expected to increase as the Hazard Index increases.

Application of this ranking scheme indicates that chronic effects to small mammals, small birds, and herpetofauna are possible in the SE quadrant, as well as from sitewide exposure (which is primarily attributable to the SE quadrant). Because summary Hazard Indices for the SE quadrant and the entire site are low (maximum summary Hazard Index = 1.4), effects are expected to be limited to a few individuals, with effects on populations unlikely. No effects are predicted for the NE, NW, or SW quadrants, and no effects are predicted for predatory birds or mammals in any quadrant or from sitewide exposure. The greatest contributor to chronic ecological risks is phenanthrene, which is responsible for approximately 60% of the total risk to ecological receptors.

Acute effects are possible for small mammals, small birds, herpetofauna, and predatory birds and mammals in the SE quadrant and from sitewide exposure. Because the acute summary Hazard Indices for the SE quadrant and the entire site are low (maximum summary Hazard Index = 3.2), effects are expected to be limited to a few individuals, with no population-level effects expected. The PAHs phenanthrene and benzo(a)pyrene are the greatest contributors to acute ecological risks at LF-023.

Risks are not predicted for terrestrial organisms in wetland PB-14, as represented by the raccoon, based on acute and chronic summary Hazard Index values of 0.0031 and 0.031, respectively. However, aquatic invertebrates, if present, may be at risk due to exposure to aluminum, arsenic, and zinc in wetland seeps, based on acute and chronic summary Hazard Index values of 6.5 and 28, respectively. If the samples collected at SW-023-02 are representative of long-term surface water concentrations of site-related contaminants in surface waters, the chronic Hazard Index value of 28 would apply. Using the relative ranking scheme described above, probable chronic

effects to aquatic organisms would be predicted. However, if the samples collected at SW-023-02 represent a local hot spot, possible acute effects would be predicted using the ranking scheme. Under either exposure scenario, effects to aquatic invertebrates may occur.

4.4.3.4 Uncertainties. The prediction of ecological risks involves several uncertainties. These are outlined below:

1) The models used to estimate exposures involve numerous exposure parameters, some of which are values from the literature, and some of which are estimated or assumed. Efforts were made to select exposure parameters representative of a variety of species so that exposure estimates would be representative of more than a single species. Because the parameters selected are generally conservative, risks for most species may be over-estimated however, risks may still be under-estimated for some species.

2) The exposure models assume that organisms will spend equal amounts of time in all habitats within their home range. In actuality, organisms will spend varying amounts of time in different habitats, which would affect their exposures. The limitation of this assumption is that exposures to the particular species modeled may be under- or over-estimated in the model. The consequences of this assumption at the site are expected to be minor because habitat types at the site are relatively uniform, and chemicals appear to be distributed over relatively large areas, minimizing the extent of variation in exposure.

3) In selecting RTVs, the lowest toxicity value reported was selected as the RTV, meaning that the RTVs may overestimate ecological risk.

4) Dermal contact was not evaluated because of a paucity of information concerning uptake rates for wildlife. Therefore, total exposures may be more than that predicted based on ingestion scenarios and risks may be under-estimated by scenarios that do not account for dermal exposure. However, the relative contribution of dermal contact to total risks is expected to be much lower than that of food and soil ingestion due to the fur, feathers, or hardened skin covering most species of terrestrial wildlife.

5) Chronic toxicity to small mammals, small birds, and herpetofauna may result in reduced reproductive success, while acute toxicity may result in mortality

in populations of these organisms. If populations of these organisms are significantly reduced, fewer prey items would be available for predatory birds and mammals. Predatory birds and mammals might stop foraging in those areas where populations were reduced, therefore, reducing the risks to predatory species. It is unlikely that populations of wildlife will be significantly reduced given the low hazard indices estimated in the ecological risk assessment.

6) The number of surface water samples collected in the wetland south of LF-023 may not fully characterize the magnitude or extent of surface water contamination. This could affect the risk estimates developed for aquatic and terrestrial organisms.

4.5 SUMMARY AND CONCLUSIONS

Various chemicals have been identified as site contaminants in various media at LF-023 (Table 4-2). The site contaminant identified in the waste material was 1,2-dichlorobenzene. The primary source of contamination at LF-023 is the surface soil. Seventeen SVOCs were identified as site-related contaminants in the surface soil. These SVOCs are all PAHs commonly found in fuels, oil, and their residues suggesting leaks or spills of waste oil at this site. Silver and one PCB, Aroclor 1254, were also identified as site contaminants in the surface soil. No site contaminants were identified in the subsurface soils.

Aluminum, iron, arsenic, and zinc were identified as site-related contaminants in the surface water. PHCs were detected in sediment samples and are considered site related contaminants. No PHCs were detected in the associated surface water samples. The PHCs may not be due to petroleum or fuel-based chemicals in sediments as no PAHs or BTEX chemicals were identified as site-related contaminants in sediments. The reported PHCs may instead be due to the organic material common in many wetland sediments.

Vinyl chloride, chloroform, chlorobenzene, benzene, ethylbenzene, xylenes (total), aluminum, iron, manganese, and potassium were identified as site contaminants in the groundwater. The halogenated organics are believed to have their origin in the landfill, but a source was not identified.

The PAHs and PCBs detected in the surface soil have low solubilities and a strong propensity to sorb to soils. The primary migration pathway for these compounds is mechanical transport. Biodegradation may occur for some of the PAHs and PCB congeners; however, this process is expected to be extremely slow for some of these compounds. Because silver was detected above background concentrations only in the surface soils, it is not expected to migrate to groundwater.

The 1,2-dichlorobenzene detected in one waste sample is moderately soluble and may migrate downward with rainwater infiltration.

The chlorinated solvents, vinyl chloride, chloroform, and chlorobenzene, are expected to persist in the groundwater and undergo only slow biodegradation. The fuel-related solvents, benzene, ethylbenzene, and xylene, and naphthalene will be transported by the same migration pathway (dispersion and diffusion) as the chlorinated solvents; however, the fuel-related compounds are expected to undergo relatively rapid biodegradation.

The high concentrations of iron and manganese are expected in the groundwater because of the anaerobic condition created by the landfill. The elevated aluminum concentration (above background) may be due to leaching from the waste or an increase in the solubility of the native aluminum because of the groundwater conditions. The potassium may be related to winter salting of nearby roads as indicated by the presence of potassium in the upgradient wells.

The aluminum, arsenic, iron, and zinc concentrations in the surface water may be the result of anaerobic conditions at the landfill, which may be increasing the solubility of the native compounds at the site (although this would still be considered a site effect). This is further supported by the fact that arsenic was not identified as a site contaminant in the surface soil, waste, or groundwater. In addition, the surface water samples were unfiltered which may add a high bias to the results.

A baseline risk assessment was conducted for the LF-023 site to determine whether site contaminants could pose a risk to human health or the environment. This assessment was conducted in accordance with USEPA (USEPA, 1989d) and NYSDEC guidance (NYSDEC, 1989a) in the same manner as the baseline risk assessment for LF-022. The risk assessment included a human health risk assessment and a habitat-based environmental risk assessment.

Contamination related to LF-023 has been detected in various media, including groundwater, surface soil, subsurface soil/waste material, surface water, and sediments. The contaminants of concern at LF-023 are VOCs (including vinyl chloride) and naphthalene in groundwater, PAHs in surface soil, and arsenic in surface water seeps south of LF-023. Other contaminants detected at the site include 1,1-dichlorobenzene in subsurface soil, and iron, manganese, and potassium in groundwater.

The human health risk assessment identified eight complete exposure pathways that were relevant to the LF-023 site.

Current Site Conditions

1. Incidental Ingestion of and Direct Contact with Surface Soil by a Security Policeman

2. Incidental Ingestion of and Direct Contact with Surface Soil by a Child Trespasser

3. Incidental Ingestion of and Direct Contact with Surface Water by a Child Trespasser

4. Inhalation of Vapors and Fugitive Dusts by a Nearby Resident

Future Site Conditions

1. Ingestion of, Direct Contact with, and Inhalation of Volatile Compounds from Groundwater by a Future Resident

2. Incidental Ingestion of and Direct Contact with Surface Soil by a Future Resident

3. Incidental Ingestion of and Direct Contact with Surface Water by a Future Child Resident

4. Inhalation of Vapors and Fugitive Dusts by a Future Resident

These scenarios were determined to be the most likely exposures that could occur at LF-023 under current and future site conditions. Each of these pathways was evaluated quantitatively to determine the potential carcinogenic and noncarcinogenic risks. Potential risks associated with subsurface soil and waste materials were not assessed quantitatively because of the lack of exposure to these media.

Based on the above eight pathways, a total of four potentially exposed populations were identified. The carcinogenic and noncarcinogenic risks from multiple pathways were combined to yield total site risks if the same individual could be exposed via more than one pathway. Three populations were identified for current site conditions: (1) Security Police, (2) a Child Trespasser, and (3) Nearby Residents. The only pathways that were combined under current site conditions were the child trespasser surface soil and surface water scenarios. One population was identified under future site conditions: Future Residents. Consequently, the carcinogenic and noncarcinogenic risks from all four future scenarios were combined to yield total site risks. In addition, for scenarios involving residential exposure, both a child and an adult receptor was evaluated.

Carcinogenic and noncarcinogenic risks were estimated for a security police officer engaged in training exercises at LF-023 under current site conditions. These risks are presented in Figures 4-15 and 4-16. Two sets of carcinogenic and noncarcinogenic risk estimates were calculated using the two surface soil data sets as exposure point concentrations: (1) the sitewide average from four composite surface soil samples; and (2) the concentrations detected in sample SS-04 from the southeast quadrant. The cancer risks for this population ($9x10^{-5}$ and $3x10^{-4}$) are near or slightly above the upper end of the USEPA target cancer risk range (Figure 4-15). The most realistic risk estimate for this population is the risk associated with sitewide average concentrations ($9x10^{-5}$). Because this is the only exposure pathway for this population at LF-023, security police are not likely to be at an increased risk of developing cancer over a lifetime.

The Hazard Indices associated with this potentially exposed population (i.e., 0.07 and 0.3) were below the USEPA target hazard index of 1. Therefore, this population is not likely to experience adverse noncarcinogenic effects as a result of exposure to surface soil at LF-023 (Figure 4-16).

Carcinogenic and noncarcinogenic risks associated with exposure of a child trespasser under current conditions were also assessed. Risks associated with exposure to surface soil and surface water at LF-023 were combined because this population

FIGURE 4-15

SUMMARY CANCER RISKS FOR LF-023 - SECURITY POLICE

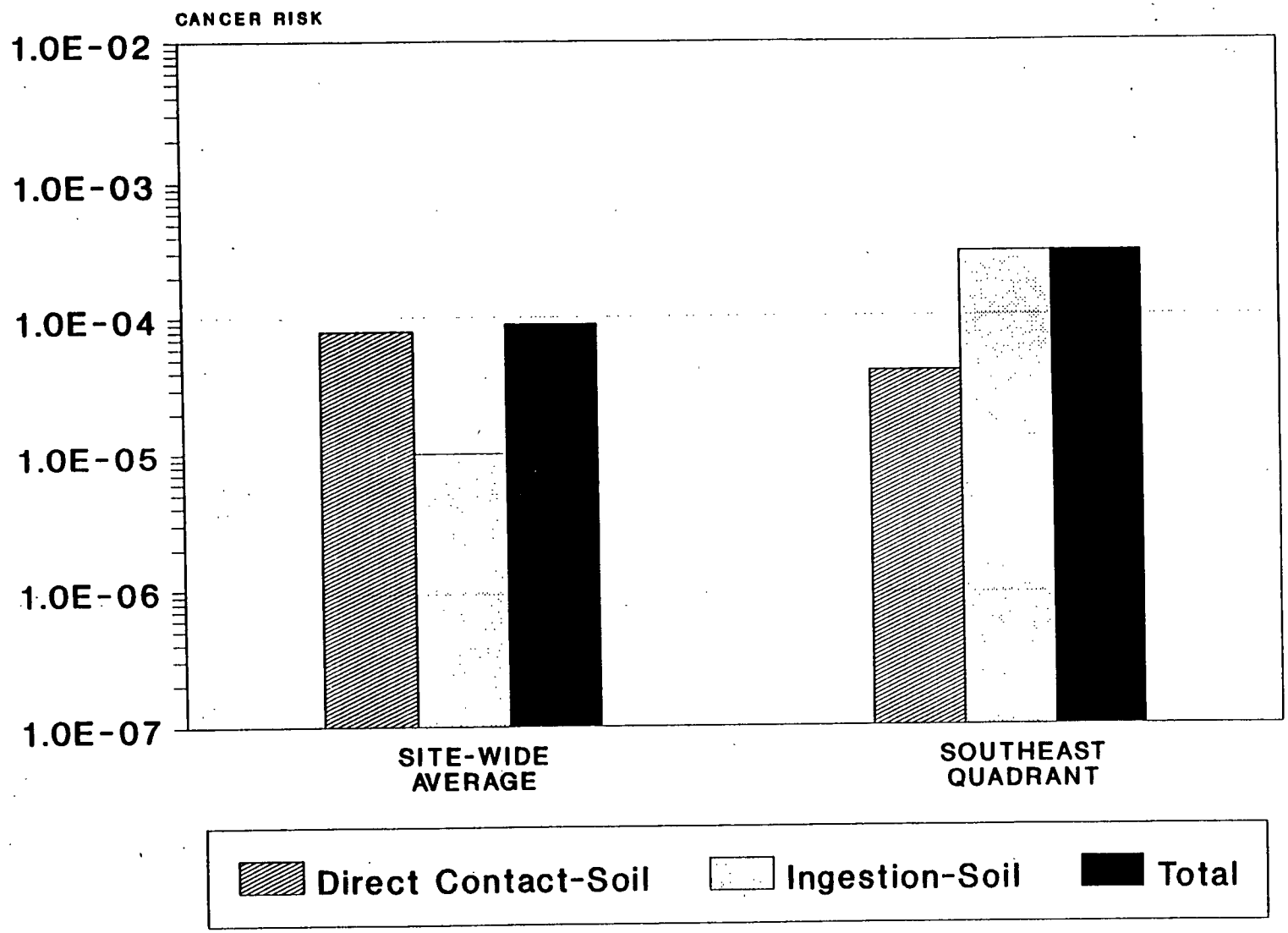

FIGURE 4-16

SUMMARY NONCANCER RISKS FOR LF-023 - SECURITY POLICE

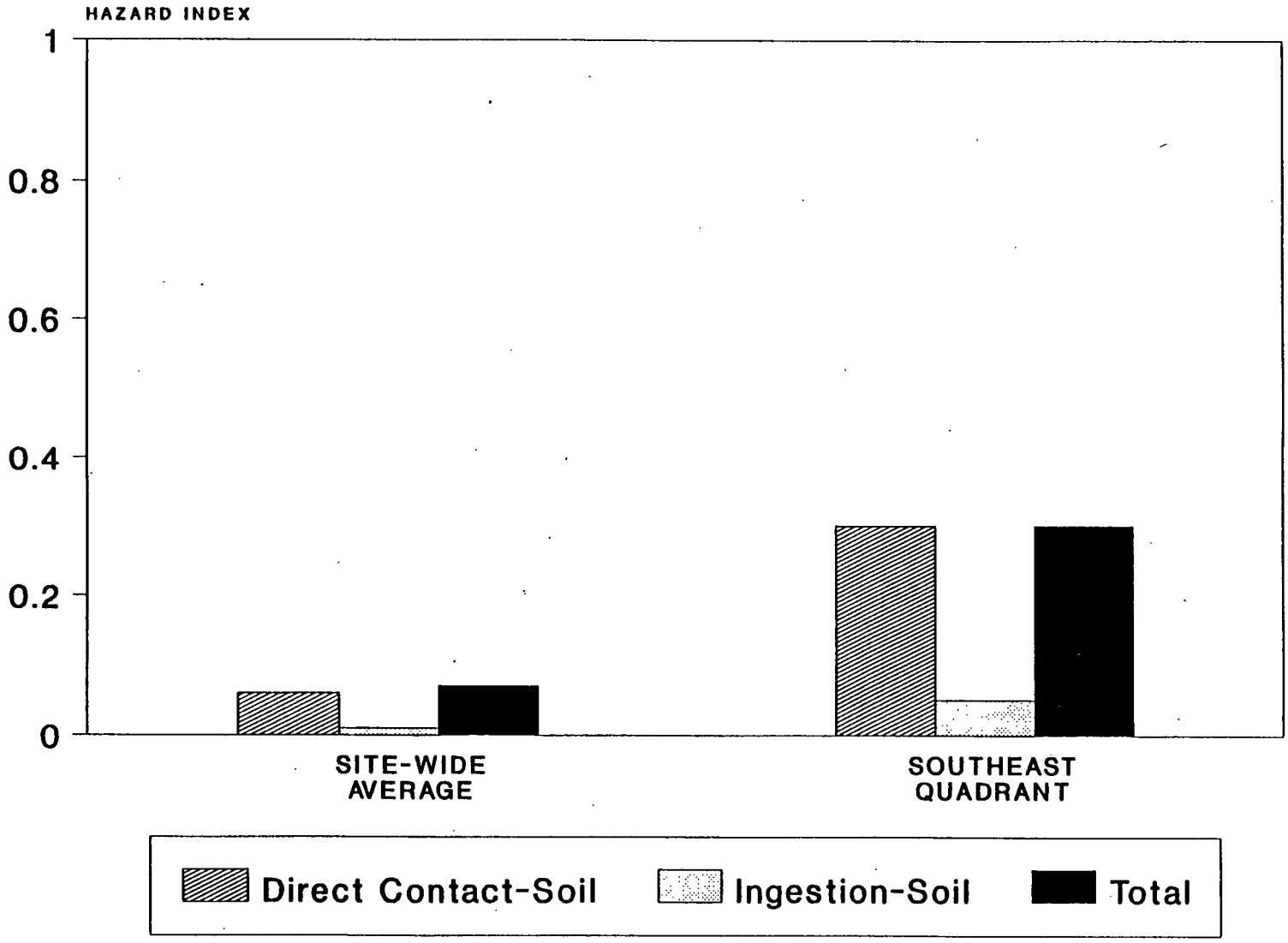

could be exposed via both pathways. The resulting risk estimates for the child trespasser scenario are depicted in Figures 4-17 and 4-18.

As with the Security Police surface soil scenario, two carcinogenic and noncarcinogenic risk estimates were calculated for the surface soil Child Trespasser pathways corresponding to the two different surface soil data sets. The risks associated with the sitewide average represent the most realistic risks for this population because preferential exposure to any one quadrant is unlikely.

As indicated in Figure 4-17, the two combined carcinogenic risks associated with this population ($1x10^{-5}$ and $3x10^{-5}$) are within the 10^{-6} to 10^{-4} target risk range established by USEPA. In the event that a child were to trespass on LF-023, it is unlikely that an individual would repeatedly be exposed to the same area. Therefore, the most realistic estimate of risk is $1x10^{-5}$, which describes the risks based on the sitewide average. This risk is within the acceptable range established by the USEPA. Consequently, an increased risk of cancer is not anticipated for this population.

Both Hazard Indices associated with this population (0.009 and 0.02) were below the USEPA target of 1 (Figure 4-18). This indicates that children trespassing on the site are unlikely to experience adverse noncarcinogenic effects as a result of exposure to surface soil and surface water.

The third potentially exposed population evaluated under current site conditions was a nearby resident of the mobile home development located southwest of LF-023. It was assumed that children and adults living in this area could inhale vapors and fugitive dusts released from the landfill surface. Conservative volatile and fugitive dust emission and dispersion models were used to estimate airborne contaminant concentrations at a distance of 200 m from the landfill. The carcinogenic risks associated with this hypothetical population are $2x10^{-6}$ for both the child and the adult receptor for a total site cancer risk of $4x10^{-6}$. This estimate is within the USEPA target risk range. These risk estimates are considered to be conservative given the conservative nature of the fate and transport models and the exposure scenarios used in the calculations. Therefore, individuals in the mobile home development are not likely to be at an increased risk of cancer as a result of inhaling airborne emissions from LF-023.

The hazard indices associated with this hypothetical exposure are 0.04 for the child receptor and 0.006 for the adult. Both are below the USEPA target of 1. Therefore,

FIGURE 4-17

SUMMARY CANCER RISKS FOR LF-023 - CHILD TRESPASSER

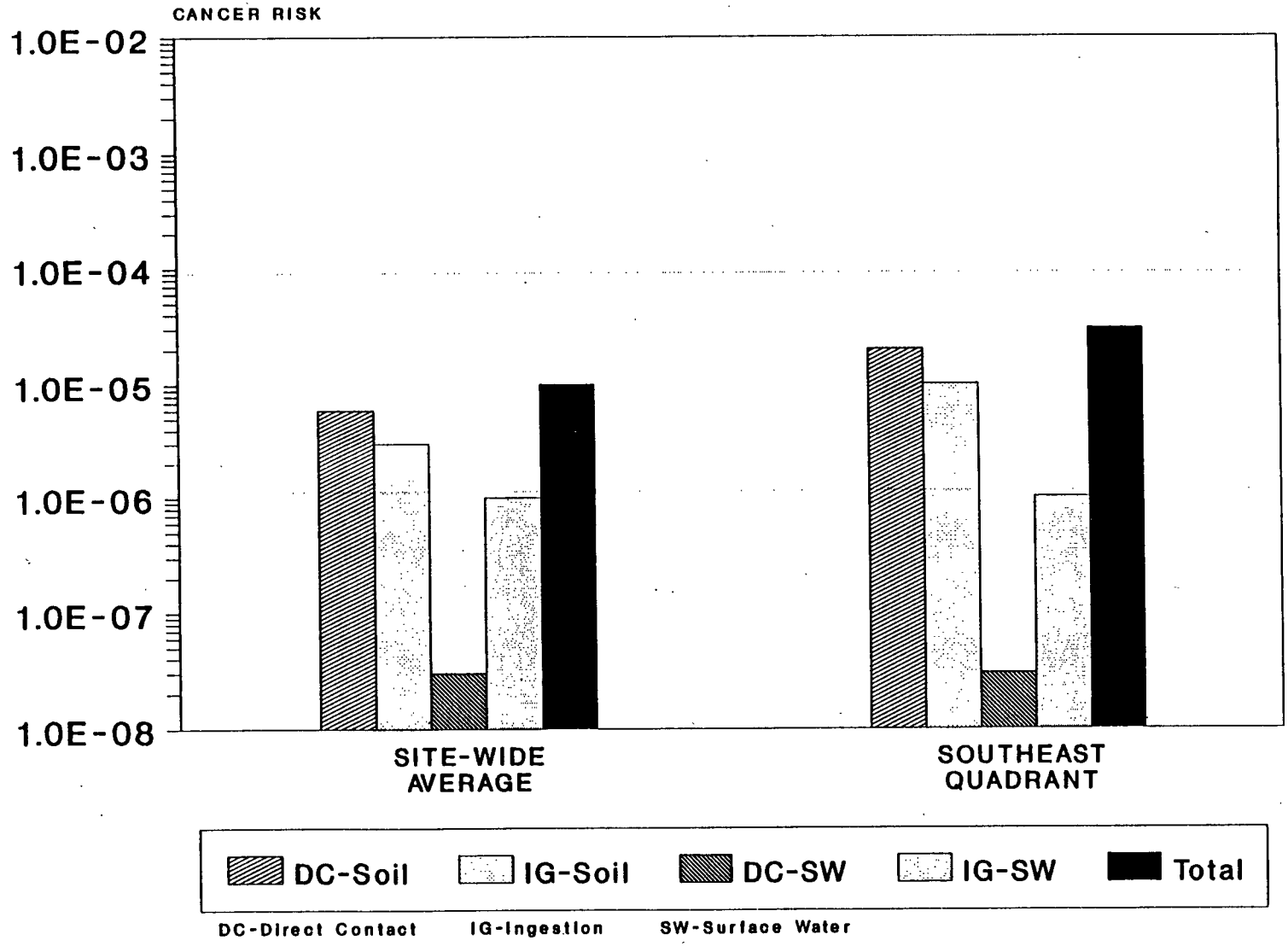

FIGURE 4-18

SUMMARY NONCANCER RISKS FOR LF-023 - CHILD TRESPASSER

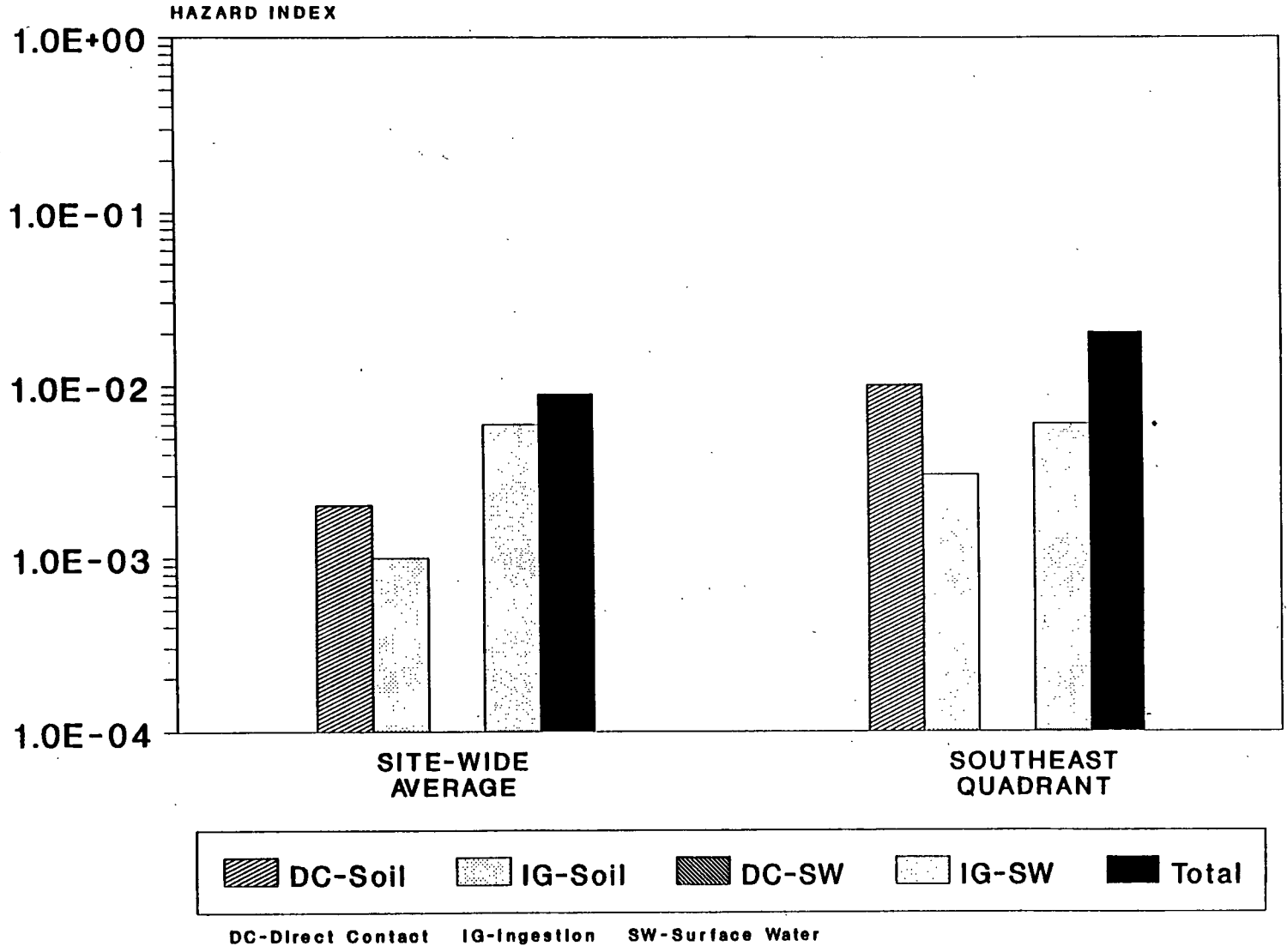

adverse noncarcinogenic health effects as a result of the inhalation of emissions from LF-023 are not expected.

Potential risks to a future resident were assessed assuming that Plattsburgh AFB will close and homes will be built adjacent to LF-23. Under such conditions, children and adults from these homes could be exposed to site-related contaminants in groundwater, surface soil, surface water (child only), and air. Consequently, the risks associated with these four media were combined. Cancer risks associated with the child and adults receptors were also combined based on the assumption that these receptors represent the same individual at different stages of life. In other words, an individual could be exposed to site-related contaminants in the four media as a child and again as an adult. The resulting risk estimates are presented in Figures 4-19 and 4-20.

As indicated in Figure 4-19, a hypothetical future resident is likely to be at an increased risk of developing cancer as a result of exposure to site-related contaminants at LF-023. Figure 4-20 indicates that such individuals, primarily children, might also be at risk of experiencing adverse noncarcinogenic effects. Essentially 100 percent of the total site cancer risks associated with the future resident population are attributable to exposure to vinyl chloride in groundwater (ingestion, direct contact and inhalation) and carcinogenic PAHs in surface soil (direct contact, incidental ingestion, and inhalation of emissions). The majority of the total site hazard indices is attributable to the inhalation of PAHs in airborne emissions. Lesser percentages of the hazard indices are attributable to PAHs in surface soil (direct contact and incidental ingestion) and vinyl chloride and naphthalene in groundwater (ingestion and inhalation).

The elevated risk estimates presented in Figures 4-19 and 4-20 are dependant upon the assumptions used in the exposure scenarios. The critical assumption involved in these scenarios is that the base will close. All other assumptions, such as the development of a water supply well downgradient of the landfill and the construction of housing units adjacent to the site, hinge on this assumption. Consequently, the risk estimates presented in Figures 4-19 and 4-20 represent conservative estimates under so-called "worst-case" conditions.

Ecological receptors may be exposed to site-related contaminants in surface soils on LF-023 as well as to surface waters in wetland PB-14. Ecological risks associated with exposures to site-related contaminants in surface soils are expected to be minor, with Hazard Indices in the range of 10^{-5} to 10^{+0}. While effects to individuals may

FIGURE 4-19

SUMMARY CANCER RISKS FOR LF-023 - FUTURE RESIDENT

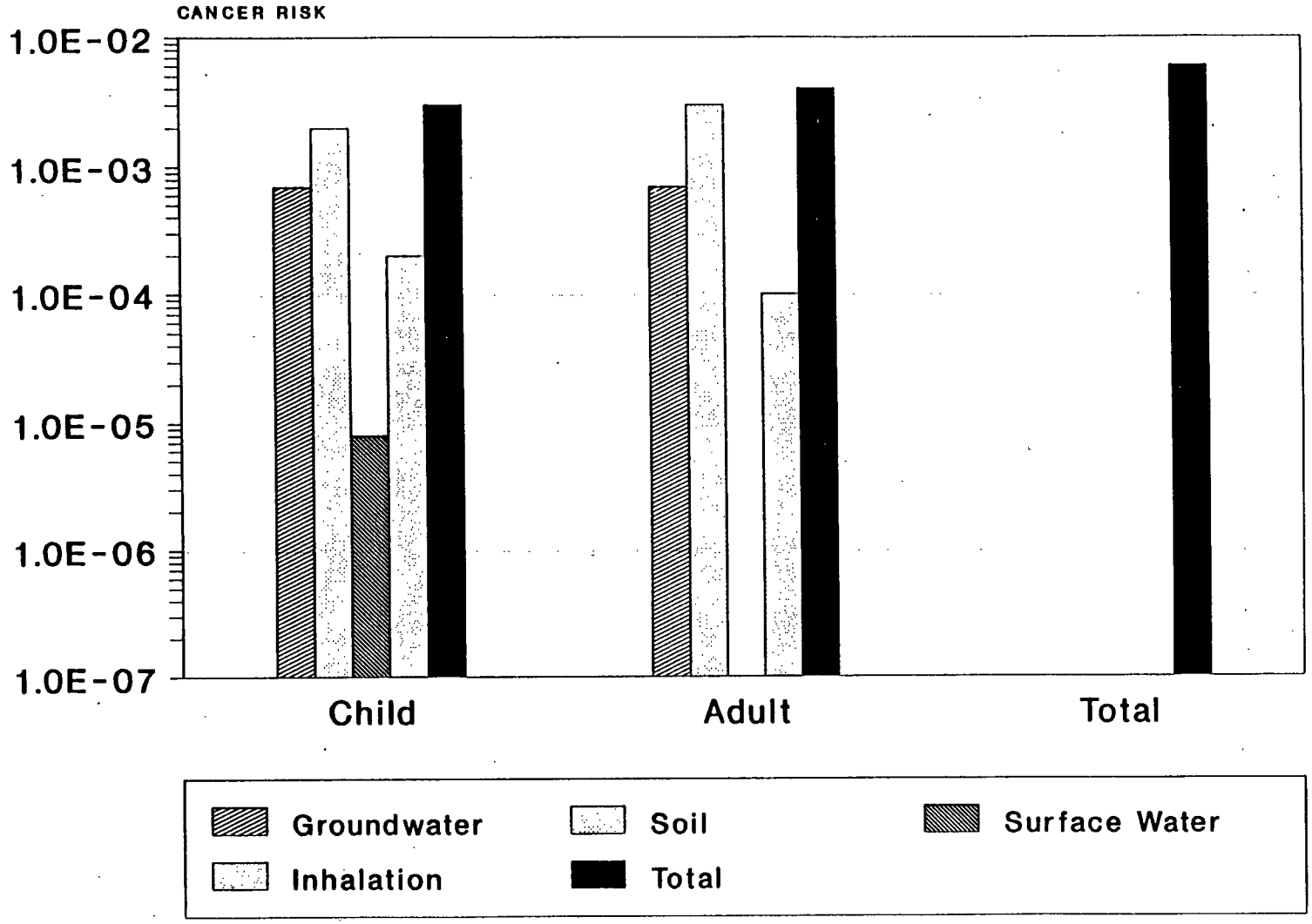

FIGURE 4-20

SUMMARY NONCANCER RISKS FOR LF-023 - FUTURE RESIDENT

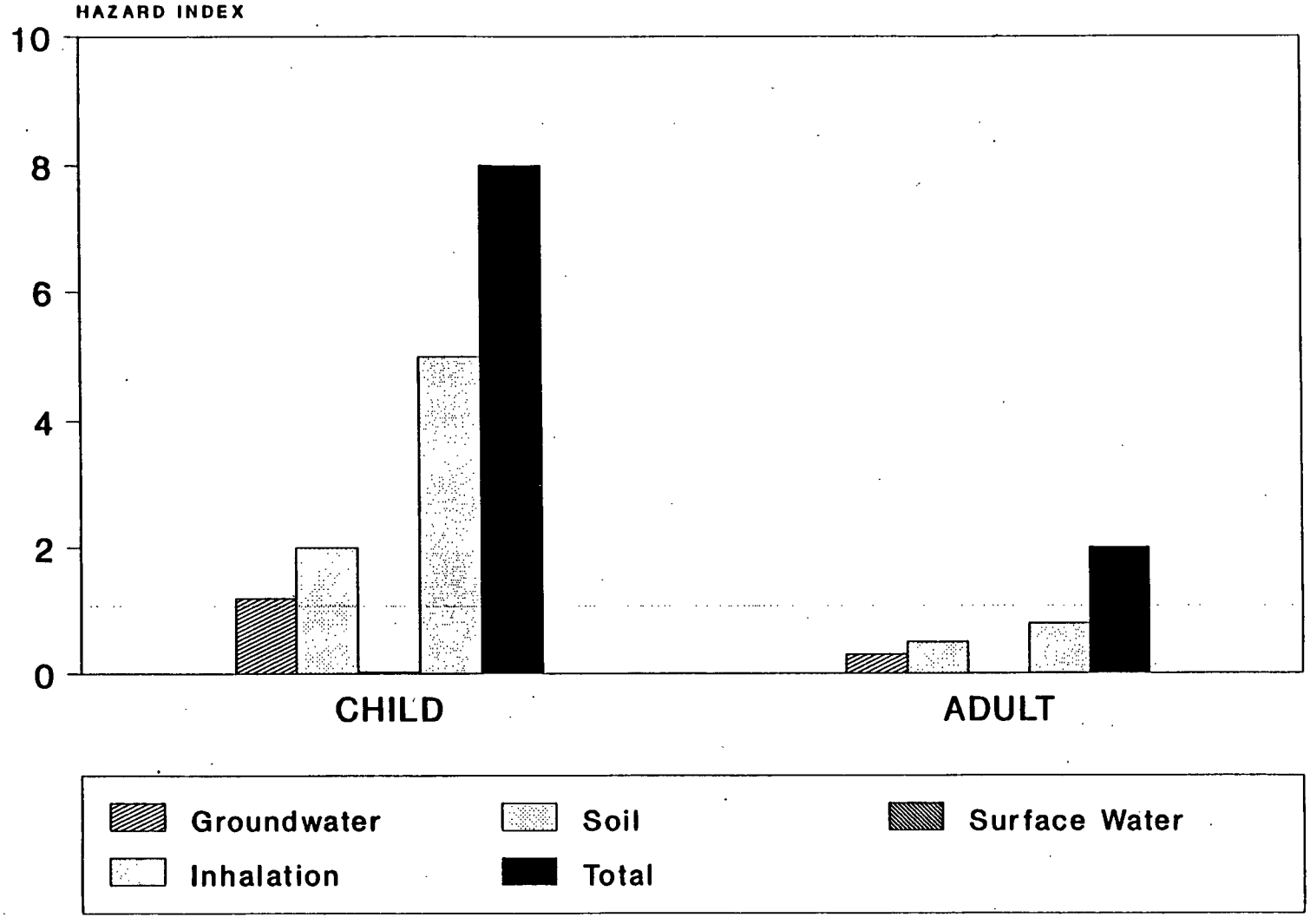

occur, population-level effects are unlikely because the number of individuals affected is expected to be low based on the low Hazard Indices calculated.

Effects to terrestrial organisms in the wetland south of LF-023 are not predicted based on Hazard Indices in the range of 10^{-3} to 10^{-2}. However, acute and chronic toxicity to aquatic organisms in the wetland (which are expected to be limited to aquatic invertebrates) may be occurring based on Hazard Indices in the range of 10^{+0} to 10^{+1}.

4.5.1 Recommended Remedial Action Objectives

Remedial response objectives are media-specific goals established to protect human health and the environment. These objectives are developed based on identified risks associated with the site contaminants and media of concern. The following remedial response objectives have been developed for LF-023:

- minimize potential public health and ecological risks associated with direct soil contact
- minimize potential for risks to aquatic organisms associated with surface water exposure in the adjacent wetland
- minimize infiltration of precipitation into waste materials
- minimize potential for contaminant migration from waste material
- minimize erosion of cover soil

4.5.2 Data Limitations and Recommendations for Future Work

The surface soils at LF-023 were characterized by collecting and analyzing four composite samples. While the data from the composite samples was sufficient for the purposes of the risk assessment they did not delineate the specific areas of concern. This has been identified as a data limitation.

Most of the subsurface samples from LF-022 were collected from the waste. There are few samples of natural soil from below the waste because sampling depth was limited by the sampling equipment (i.e. backhoe). Therefore, information about the

mobility, in soil, of contaminants detected in waste is limited and must be inferred from groundwater data.

The 2-butanone in groundwater cannot be unequivocally disregarded from consideration at this site, however, based upon the available data, it is unlikely that this compound is a site contaminant. The compound is a common sampling and analysis artifact, and its association with groundwater has been sporadic without a consistent temporal and spatial relationship, therefore, it has not been considered site contaminants at this time, but has been considered a data limitation. Groundwater from eight downgradient wells will be sampled to define the presence or absence of 2-butanone.

Additional surface water and sediment sampling will also be conducted at the seeps south of LF-023 to determine if groundwater from the site is discharging to the surface and affecting water quality.

A Feasibility Study should be conducted to address the remedial action objectives identified in Subsection 4.5.1. If a remedial alternative is selected for LF-023 that requires treatment and/or removal of contaminated surface soil, future sampling will be required.

APPENDIX F

NYSDEC MEMORANDUM: FUGITIVE DUST SUPPRESSION AND PARTICULATE MONITORING PROGRAM AT INACTIVE HAZARDOUS WASTE SITES

#50

HWR-89-4031
October 27, 1989

OCT 1989

BUREAU

New York State Department of Environmental Conservation

MEMORANDUM

TO: Regional Hazardous Waste Remediation Engrs., Bur. Directors & Section Chiefs

FROM: Michael J. O'Toole, Jr., Director, Division of Hazardous Waste Remediation

SUBJECT: DIVISION TECHNICAL AND ADMINISTRATIVE GUIDANCE MEMORANDUM--FUGITIVE DUST SUPPRESSION AND PARTICULATE MONITORING PROGRAM AT INACTIVE HAZARDOUS WASTE SITES

DATE: OCT 2 7 1989

Michael J. O'Toole

1. Introduction

Fugitive dust suppression, particulate monitoring, and subsequent action levels for such must be used and applied consistently during remedial activities at hazardous waste sites. This guidance provides a basis for developing and implementing a fugitive dust suppression and particulate monitoring program as an element of a hazardous waste site's health and safety program.

2. Background

Fugitive dust is particulate matter--a generic term for a broad class of chemically and physically diverse substances that exist as discrete particles, liquid droplets or solids, over a wide range of sizes--which becomes airborne and contributes to air quality as a nuisance and threat to human health and the environment.

On July 1, 1987, the United States Environmental Protection Agency (USEPA) revised the ambient air quality standard for particulates so as to reflect direct impact on human health by setting the standard for particulate matter less than ten microns in diameter (PM_{10}); this involves fugitive dust whether contaminated or not. Based upon an examination of air quality composition, respiratory tract deposition, and health effects, PM_{10} is considered conservative for the primary standard--that requisite to protect public health with an adequate margin of safety. The primary standards are 150 ug/m^3 over a 24-hour averaging time and 50 ug/m^3 over an annual averaging time. Both of these standards are to be averaged arithmetically.

There exists real-time monitoring equipment available to measure PM_{10} and capable of integrating over a period of six seconds to ten hours. Combined with an adequate fugitive dust suppression program, such equipment will aid in preventing the off-site migration of contaminated soil. It will also protect both on-site personnel from exposure to high levels of dust and the public around the site from any exposure to any dust. While specifically intended for the protection of on-site personnel as well as the public, this program is not meant to replace long-term monitoring which may be required given the contaminants inherent to the site and its air quality.

3. Guidance

A program for suppressing fugitive dust and monitoring particulate matter at hazardous waste sites can be developed without placing an undue burden on remedial activities while still being protective of health and environment. Since the responsibility for implementing this program ultimately will fall on the party performing the work, these procedures must be incorporated into appropriate work plans. The following fugitive dust suppression and particulate monitoring program will be employed at hazardous waste sites during construction and other activities which warrant its use:

(1) Reasonable fugitive dust suppression techniques must be employed during all site activities which may generate fugitive dust.

(2) Particulate monitoring must be employed during the handling of waste or contaminated soil or when activities on site may generate fugitive dust from exposed waste or contaminated soil. Such activities shall also include the excavation, grading, or placement of clean fill, and control measures therefore should be considered.

(3) Particulate monitoring must be performed using real-time particulate monitors and shall monitor particulate matter less than ten microns (PM_{10}) with the following minimum performance standards:

Object to be measured: Dusts, Mists, Aerosols
Size range: <0.1 to 10 microns
Sensitivity: 0.001 mg/m^3
Range: 0.001 to 10 mg/m^3
Overall Accuracy: $\pm$10% as compared to gravimetric analysis of stearic acid or reference dust

Operating Conditions:
Temperature: 0 to 40°C
Humidity: 10 to 99% Relative Humidity

Power: Battery operated with a minimum capacity of eight hours continuous operation

Automatic alarms are suggested.

Particulate levels will be monitored immediately downwind at the working site and integrated over a period not to exceed 15 minutes. Consequently, instrumentation shall require necessary averaging hardware to accomplish this task; the P-5 Digital Dust Indicator as manufactured by MDA Scientific, Inc. or similar is appropriate.

(4) In order to ensure the validity of the fugitive dust measurements performed, there must be appropriate Quality Assurance/Quality Control (QA/QC). It is the responsibility of the entity operating the equipment to adequately supplement QA/QC Plans to include the following critical features: periodic instrument calibration, operator training, daily instrument performance (span) checks, and a record keeping plan.

(5) The action level will be established at 150 ug/m^3 over the integrated period not to exceed 15 minutes. While conservative, this short-term interval will provide a real-time assessment of on-site air quality to assure both health and safety. If particulate levels are detected in excess of 150 ug/m^3, the upwind background level must be measured immediately using the same portable monitor. If the working site particulate measurement is greater than 100 ug/m^3 above the background level, additional dust suppression techniques must be implemented to reduce the generation of fugitive dust and corrective action taken to protect site personnel and reduce the potential for contaminant migration. Corrective measures may include increasing the level of personal protection for on-site personnel and implementing additional dust suppression techniques (see Paragraph 7). Should the action level of 150 ug/m^3 be exceeded, the Division of Air Resources must be notified in writing within five working days; the notification shall include a description of the control measures implemented to prevent further exceedences.

(6) It must be recognized that the generation of dust from waste or contaminated soil that migrates off-site, has the potential for transporting contaminants off-site. There may be situations when dust is being generated and leaving the site and the monitoring equipment does not measure PM_{10} at or above the action level. Since this situation has the potential to migrate contaminants off-site, it is unacceptable. While it is not practical to quantify total suspended particulates on a real-time basis, it is appropriate to rely on visual observation. If dust is observed leaving the working site, additional dust suppression techniques must be employed. Activities that have a high dusting potential--such as solidification and treatment involving materials like kiln dust and lime--will require the need for special measures to be considered.

(7) The following techniques have been shown to be effective for the controlling of the generation and migration of dust during construction activities:

1. Applying water on haul roads.
2. Wetting equipment and excavation faces.
3. Spraying water on buckets during excavation and dumping.
4. Hauling materials in properly tarped or watertight containers.
5. Restricting vehicle speeds to 10 mph.
6. Covering excavated areas and material after excavation activity ceases.
7. Reducing the excavation size and/or number of excavations.

Experience has shown that utilizing the above-mentioned dust suppression techniques, within reason as not to create excess water which would result in unacceptable wet conditions, the chance of exceeding the 150 ug/m^3 action level at hazardous waste site remediations is remote. Using atomizing sprays will prevent overly wet conditions, conserve water, and provide an effective means of suppressing the fugitive dust.

(8) If the dust suppression techniques being utilized at the site do not lower particulates to an acceptable level (that is, below 150 ug/m^3 and no visible dust), work must be suspended until appropriate corrective measures are approved to remedy the situation. Also, the evaluation of weather conditions will be necessary for proper fugitive dust control--when extreme wind conditions make dust control ineffective, as a last resort remedial actions may need to be suspended.

There may be situations that require fugitive dust suppression and particulate monitoring requirements with action levels more stringent than those provided above. Under some circumstances, the contaminant concentration and/or toxicity may require appropriate toxics monitoring to protect site personnel and the public. Additional integrated sampling and chemical analysis of the dust may also be in order. This must be evaluated when a health and safety plan is developed and when appropriate suppression and monitoring requirements are established for protection of health and the environment.

cc: E. Sullivan
D. Markell
A. DeBarbieri
C. Goddard
R. Tramontano
E. McCandless
A. Fossa
J. Kelleher
J. Colquhoun
M. Keenan
D. Ritter
Regional Directors
Regional Engineers
RSHWE
Reg. Citizen Participation Specs.