NAME: Ciba Geigy
I.D. NO.: RID001194323
FILE LOC: R-9

Stabilization Investigation

Former CIBA-GEIGY Facility
Cranston, Rhode Island

Final Stabilization Design Documents
Technical Specifications

Prepared For:
CIBA-GEIGY Corporation
444 Sawmill River Road
Ardsley, New York 10502

Prepared By:
Woodward-Clyde Consultants
201 Willowbrook Boulevard
Wayne, New Jersey 07470

Volume 2 of 4

June 1994
Project No. 87X4660D

SEMS DocID 657718

NAME: Ciba Geigy
I.D. NO: RID001194323
FILE LOC: R-5
OTHER:

REC'D 6-16-94
F.B.

Stabilization Investigation

Former CIBA-GEIGY Facility
Cranston, Rhode Island

Final Stabilization Design Documents
Technical Specifications

Prepared For:
CIBA-GEIGY Corporation
444 Sawmill River Road
Ardsley, New York 10502

Prepared By:
Woodward-Clyde Consultants
201 Willowbrook Boulevard
Wayne, New Jersey 07470

Volume 2 of 4

June 1994
Project No. 87X4660D

Division 1 - GENERAL REQUIREMENTS

01010	-	Summary of Work
01050	-	Field Engineering
01045	-	Cutting and Patching
01046	-	Connections to Existing Facilities
01091	-	Reference Standards
01120	-	Decontamination of Personnel and Equipment
01025	-	Measurement and Payment
01200	-	Preconstruction Conference
01210	-	Progress Meetings
01310	-	Construction Schedules
01300	-	Submittals
01026	-	Schedule of Values
01380	-	Construction Photographs
01560	-	Temporary Construction Facilities
01540	-	Protection of the Work and Property
01545	-	Security
01550	-	Access Roads and Parking Areas
01560	-	Environmental Controls
01610	-	Storage of Material
01630	-	Substitutions
01620	-	Installation of Equipment
01710	-	Cleaning
01720	-	Record Documents
01730	-	Operation and Maintenance Data
01750	-	Spare Parts and Maintenance Materials

Division 2 - SITE WORK

02060	-	Demolitions and Removals
02220	-	Excavation and Backfill
02545	-	Pavement
02671A	-	Soil Vapor Extraction Well Modifications
02671B	-	Groundwater Extraction Well Modifications

Division 3 - CONCRETE

03010	-	Grout
03300	-	Concrete

Division 4 - MASONRY

04100	-	Mortar
04150	-	Masonry Accessories
04200	-	Unit Masonry Construction

Division 5 - METALS

05120	-	Structural Steel
05500	-	Miscellaneous Metal Fabrications
05535	-	Aluminum Grating
05520	-	Aluminum Handrails and Railings
05505	-	Anchor Bolts, Expansion Anchors and Concrete Inserts

Division 6 - WOOD AND PLASTICS

06100	-	Rough Carpentry
06400	-	Pre-Engineered Wall Panels

Division 8 - DOORS AND WINDOWS

08110	-	Hollow Metal Doors and Frames
08300	-	Overhead Rolling Doors
08710	-	Door Hardware

Division 9 - FINISHES

09880	-	Protective Concrete Coatings Concrete Toppings
09900	-	Painting

Division 10 - SPECIALTIES

10200	-	Louvers and Vents
10400	-	Identification Devices

Division 11 - EQUIPMENT

11212	-	Air-Operated Diaphragm Pumps
11214	-	Positive Displacement Metering Pumps
11222	-	Top Entering Mechanical Mixing Equipment

11224	-	Side Entering Mechanical Mixing Equipment
11226	-	Lamella Gravity Settler/Thickener System
11365	-	Recessed Plate Filter Press
11247	-	Liquid Polymer Feed Equipment and Appurtenances
11210	-	Soil Vapor Extraction System Pumps
11340	-	Soil Vapor Extraction Equipment
11350	-	Vapor-Phase Treatment System

Division 13 - SPECIAL CONSTRUCTION

13400	-	Plant Monitoring and Control System - General Requirements
13410	-	General Instrumentation and Control Requirements
13422	-	Pressure Transmitter
13427	-	Level Transmitter - Continuous Level Sensor Element
13428	-	Single Point Level Switch
13432	-	Differential Pressure Transmitter
13432	-	Characterized Ball Flow Control Valves
13435	-	Butterfly Flow Valve, Pneumatic Airated
13436	-	Limirorque Quarter Turn Electric Valve Actuator/Positioner
13437	-	Flow Meter - Magnetic
13450	-	Control Panels
13451	-	Modicon Programmable Logic Controller
13452	-	Modicon Modbus Plus Bridge/Multiplexer
13455	-	Moore Industries DIN Power Supply
13456	-	ARCOM SHIM-8 HART Interface Unit
13457	-	Eaton IDT Panelmate Vide Control Panel
13470	-	Mon-Machine Interface Software
13201	-	Groundwater Pretreatment System Steel Tanks
13202	-	Bolted Equalization Tanks
13120	-	Pre-engineered Buildings
13121	-	SVE System Trailer and Appurtenances
13200	-	SVE Shop Fabricated Tanks

Division 15 - MECHANICAL

15080	-	Piping Smaller Than 4-Inches in Diameter
15085	-	Valves and Specials Smaller Than 4-Inches in Diameter
15140	-	Pipe Hangers, Supports, and Restraints

15051	-	Wall Pipes, Floor Pines and Pipe Sleeves
15090	-	Piping 4-inches in Diameter and Layer
15095	-	Valves and Specials 4-inches in Diameter and Layer
15120	-	Gas Piping System
15140	-	Supports and Anchors
15335	-	Dry Pipe Sprinkler System
15365	-	Portable Fire Protection Equipment
15550	-	Unit Heaters - Gas Fired
15750	-	Packaged Air Conditioning Units, Thru Wall, Room Type
15850	-	Make-Up Supply Air and Circulation Fans
15970	-	Automatic Temperature Controls
15990	-	Testing, Adjusting and Balancing of HVAC System

Division 16 - ELECTRICAL

16010	-	General Provisions
16111	-	Rigid Conduit
16112	-	Flexible Conduits
16130	-	Pull and Junction Boxes
16120	-	600 Volt Cable
16125	-	Instrumentation Cable
16127	-	Heat Tracing Cable
16440	-	Disconnect Switches
16170	-	Grounding Systems
16470	-	Lighting and Distribution Panelboards
16500	-	Lighting Fixtures
16482	-	Motor Control Centers
16480	-	Magnetic Motor Starters
16461	-	Dry Type Transformers
16465	-	Control Stations

SECTION 01010
SUMMARY OF WORK

PART 1 GENERAL

1.1 DESCRIPTION OF WORK

A. The following description is provided as a general scope of work for the construction of the Stabilization Action at the former CIBA-GEIGY facility in Cranston, Rhode Island. The summary of work presented in this section is an overall general summary of the CONTRACTOR'S responsibilities, and does not supersede the requirements of any other specific related section.

1. Modify two (2) existing groundwater recovery wells. Provide submersible pumps, piping, valves, instrumentation and a pre-engineered enclosure as shown and specified.

2. Provide and install a forcemain from the recovery wells to the pretreatment system.

3. Provide and install the forcemain from the Soil Vapor Extraction (SVE) system to the groundwater pretreatment system.

4. Provide a three-sided fence around both forcemains and all exposed exterior piping and conduit.

5. Provide and install two (2) equalization tanks, transfer pumps and secondary containment areas as shown and specified.

6. Demolish and remove selected areas of Building No. 15 as shown and specified.

7. Provide and install the groundwater pretreatment system including all required electrical, structural, equipment, tanks, instrumentation, piping/valves, plumbing, fire protection and HVAC work as shown and specified.

8. Relocate the existing sand filter in Building No. 15 and the existing Air Stripper, as shown.

9. Provide and construct the SVE System including all required electrical, structural, instrumentation, piping, extraction wells and HVAC work as shown and specified.

10. Provide and install a thermal/catalytic oxidizer for the SVE System.

11. Provide and install a new gravity sewer for the groundwater pretreatment system effluent.

B. Permits and Regulations:

1. Obtain and pay for all necessary and required permits for the work.

2. Comply with all applicable regulations of OSHA in performance of the work and take all required precautions to insure the safety and health of personnel.

C. Submittals:

Prior to beginning the work, the CONTRACTOR shall submit to the OWNER and ENGINEER for approval, all materials as required in other sections of this document.

D. Hours of Work:

1. Unless permitted by the OWNER, no work shall be performed between the hours of 6:00 pm and 7:00 am.

2. If it becomes absolutely necessary to perform the required work at either night or on weekends, the CONTRACTOR shall inform both the OWNER and the ENGINEER in writing, 24-hours in advance of beginning such work.

1.2 CONTRACTS

A. The work for this project shall be performed under one prime contract.

1.3 CONTRACTOR'S USE OF THE PREMISES

A. Coordinate the use of the premises, for storage and the operations of his workmen, with the OWNER Operations and the existing utility service companies.

B. Provide protection and safekeeping of all equipment and materials on the site. No claim shall be made against the OWNER or his authorized representatives by reason of any act. No materials or equipment may be placed upon the property other than the areas designated by the OWNER to be used for storage.

PART 2 PRODUCTS

(Not Used)

PART 3 EXECUTION

(Not Used)

END OF SECTION 01010

SECTION 01025
MEASUREMENT AND PAYMENT

PART 1 GENERAL

1.1 SECTION INCLUDES

A. Description of methods measuring and payment for work performed in accordance with the Contract Documents.

1.2 RELATED SECTIONS

A. General Conditins - Information to Bidders

1.3 DESCRIPTION

A. The items listed below beginning with Article 1.6, refer to and are the same pay items listed in the Bid Form. They constitute all of the pay items for the completion of the Work. No direct or separate payment will be made for providing miscellaneous temporary or accessory works, plant, services, CONTRACTOR'S field offices, layout surveys, job signs, sanitary requirements, testing, safety devices, approval and record drawings, water supplies, power, maintaining traffic, removal of waste, watchmen, bonds, insurance, and all other requirements of the General Conditions, and other sections. Compensation for all such services, things and materials shall be included in the prices stipulated for the lump sum and unit pay items listed herein.

1.4 ESTIMATE OF QUANTITIES

A. The estimated quantities for unit bid prices, as listed in the Bid Schedule, are approximate only and are included solely for the purpose of comparison of bids. The OWNER does not expressly or by implication agree that the nature of the materials encountered below the surface of the ground or the actual quantities of material encountered or required will correspond therewith and reserves the right to increase or decrease any quantity or to eliminate any quantity as OWNER may deem necessary. CONTRACTOR will not be entitled to any adjustment in a unit bid price as a result of any change in an estimated quantity and agrees to accept the aforesaid unit bid prices as complete and total compensation for any additions or deductions caused by a variation in quantities as a result of more accurate measurement, or by any changes or alterations in the Work approved by the OWNER, and for use in the computation of the value of the Work performed of progress payments.

1.5 RELATED PROVISIONS SPECIFIED ELSEWHERE

A. Payments to CONTRACTOR: Refer to General Conditions and Construction Contract.

B. Changes in Contract Price: General Conditions

C. Schedule of Valves: Section 01026

1.6 STABILIZATION ACTION

A. Measurement and Payment: The lump sum payment for Item 1 will be full compensation for completing the Work as shown and specified under Divisions 1 through 16.

END OF SECTION 01025

SECTION 01026
SCHEDULE OF VALUES

PART 1 GENERAL

1.1 SECTION INCLUDES

A. Description and requirements of the Schedule of Values.

1.2 DESCRIPTION

A. The Schedule of Values is an itemized list that establishes the value or cost of each part for the Work. It shall be used as the basis for preparing progress payments and may be used as a basis for negotiations concerning additional work or credits which may arise during the construction. Quantities and unit prices may be included in the schedule when approved by or required by the ENGINEER.

1.3 PREPARATION

A. The schedule shall show breakdown of labor, materials equipment and other costs used in preparation of the Bid.

B. The costs shall be in sufficient detail to indicate separate amounts for each Section of the Specifications.

C. Insurance, temporary facilities and job mobilization may be included. However, these items will be included for payment at a rate spread equally over the entire length of the project.

D. The Schedule of Values shall be prepared on a standard AIA Form.

E. Use the Table of Contents of the Specifications as basis for Schedule format and identify each item with number and title in the Table of Contents. List sub-items of major products or systems as appropriate or when requested by ENGINEER.

F. When requested by ENGINEER, support values with data that will substantiate their correctness.

G. The sum of the individual values shown on the Schedule of Values must equal the total Contract Price.

H. Each item shall include a directly proportional amount of the overhead and profit.

I. The schedule shall show the purchase and delivery costs for materials and equipment that the CONTRACTOR anticipates he shall request payment for prior to their installation.

1.4 SUBMITTAL

A. Submit two (2) copies of the Schedule of Values to the ENGINEER for approval at least 20 days prior to submitting the first application for a progress payment. After review by ENGINEER, revise and resubmit Schedule as required until it is approved.

PART 2 PRODUCTS

(Not Used)

PART 3 EXECUTION

(Not Used)

END OF SECTION 01026

SECTION 01040
COORDINATION

PART 1 GENERAL

1.1 SECTION INCLUDES

A. Information on coordination between the general CONTRACTOR, Subcontractors, CIBA-GEIGY (owner) and the ENGINEER.

1.2 COORDINATION

A. Provide coordination for all of the Work. Supervise, direct and cooperate fully with all Subcontractors, manufacturers, fabricators, suppliers, distributors, installers, testing agencies and all others whose services, materials or equipment are required to ensure the completion of the Work.

B. Provide coordination with the utility service companies or OWNER's employees performing additional work at the site. Coordinate arrangements for storage of materials during execution of the Work, affording them without compensation, reasonable use of facilities under his control necessary for the performance of their work. The CONTRACTOR shall have no claim against the OWNER for delay caused by conflicts with other CONTRACTORS, utility service companies or the OWNER employees which may be operating at the site.

C. The CONTRACTOR shall not be responsible for damage done by contractors not under his jurisdiction. He will not be liable for any such loss or damage unless it is through his own negligence.

D. Maintain sufficient competent personnel, drafting equipment and supplies at the site for the purpose of preparing layout and coordination drawings. These drawings shall supplement the Contract Documents, Working Drawings and Shop Drawings as necessary to correlate the work of various trades. Where such drawings are to be prepared by the mechanical, electrical, plumbing, or heating and ventilating Subcontractors, the CONTRACTOR will ensure that each Subcontractor maintains the required personnel and facilities at the site.

E. The CONTRACTOR shall also coordinate his Work with the work of others to assure compliance with the construction/project schedules.

F. Participate in all project coordination or progress meetings. Report on the progress of all Work and compliance with schedules.

G. Conduct all Work to assure compliance with the project schedules. Transmit written instructions to all concerned suppliers and Subcontractors with copies to the OWNER and ENGINEER. Report all conflicts and discrepancies to the ENGINEER in writing.

PART 2 PRODUCTS

(Not Used)

PART 3 EXECUTION

(Not Used)

END OF SECTION 01040

SECTION 01046
CONNECTIONS TO EXISTING FACILITIES

PART 1 GENERAL

1.1 SECTION INCLUDES

A. Connections and tie-ins to existing facilities (including test pits to locate existing utilities and structures which may be encountered) to complete construction.

1.2 SEQUENCING AND OPERATIONS

A. Keep existing facilities in operation unless otherwise specifically permitted in these Specifications or approved by the OWNER.

B. Perform all construction activities as to avoid interference with the operations of the facility and the work of others.

C. All operations of existing equipment shall be performed by the OWNER, unless specific permission is granted by the OWNER to the CONTRACTOR.

D. Coordinate all work and schedules and shall provide the OWNER with written notice at least 48-hours before a shut-down is required.

E. Complete all necessary preparatory Work and keep each shutdown to a minimum.

F. If Work during any shutdown or interruption period is not done satisfactorily, or as planned, or within the maximum time allocated, OWNER may order CONTRACTOR to place the facilities back in service and reschedule the Work, or he may order the Work required to place the facilities back in service done with other forces. If the Work is done by other forces, OWNER'S costs will be deducted from the amount due to the CONTRACTOR.

G. No direct payment will be made for any labor, materials, tools, equipment or temporary facilities required for shutdowns. All costs shall be considered to have been included in the prices bid for the Contract.

1.3 SUBMITTALS

A. Submit to the ENGINEER for Review and Comment a detailed schedule of proposed connections, including time estimate of shut-downs and tie-ins.

PART 2 PRODUCTS

(Not Used)

PART 3 EXECUTION

(Not Used)

END OF SECTION 01046

SECTION 01050
FIELD ENGINEERING

PART 1 GENERAL

1.1 SECTION INCLUDES

A. Land Surveyor requirements for maintaining horizontal and vertical control and record documentation for the Work.

1.2 RELATED SECTIONS

A. General Conditions.

B. Section 01720 - Record Documents.

1.3 REFERENCES

A. Topographical map of the Site.

1.4 SUBMITTALS

A. Submit to the ENGINEER, for review and comment, name, address, telephone number, and registration number of Surveyor before starting work.

1.5 QUALITY CONTROL

A. Employ a Land Surveyor, registered in the State of Rhode Island, and acceptable to the ENGINEER to maintain specified horizontal and vertical requirements for the work items.

1.6 RECORD DOCUMENTS

A. Maintain a complete and accurate log of control and survey work as it progresses.

B. On completion of the Work, prepare certified survey drawings illustrating as-constructed dimensions, locations, grades, angles, and elevations of construction and Site Work.

C. Submit Record Documents in accordance with Section 01720.

1.7 SURVEY REFERENCE POINTS

A. The ENGINEER will establish a base line and bench mark. Contractor shall establish all other lines required for the Work in accordance with the general conditions.

B. Protect survey control points prior to starting the Work. Preserve permanent reference points during construction. Replace damaged control and reference points at no additional cost.

1.8 SURVEY REQUIREMENTS

A. Establish local horizontal and vertical control and reference points for site mapping and Record Documents.

B. Establish interim controls for line and grade control of the Work as it progresses to assure proper placement of the Work.

PART 2 PRODUCTS

(Not Used)

PART 3 EXECUTION

(Not Used)

END OF SECTION 01050

SECTION 01045
CUTTING AND PATCHING

PART 1 GENERAL

1.1 SECTION INCLUDES

A. Cutting and patching during construction, completed Work and existing facilities to accommodate the coordination of work, work for access, inspection or testing, or similar purposes. "Demolition Work" is specified elsewhere.

1.2 CUTTING AND PATCHING

A. Execute all cutting and patching as follows:
   1. Remove and replace defective Work or Work not conforming to requirements of the Contract Documents.
   2. Remove samples of installed Work as required for testing.
   3. Remove all constructions required to provide for specified alteration or addition to existing Work.
   4. Uncover Work for ENGINEER'S inspection or inspection by regulatory agencies having jurisdiction.
   5. Connect to completed Work that was not accomplished in the proper sequence.
   6. Remove or relocate existing utilities and pipes which obstruct the Work to which connections must be made.
   7. Make connections or alterations to existing or new facilities.

B. Restore all existing Work to a state equal to that which it was in prior to cutting and restore new Work to the standards of these Specifications.

1.3 SUBMITTALS:

A. Prior to any cutting which may affect the integrity and design function of the Project, OWNER'S operations, or work of another contractor, submit written notice to the ENGINEER, requesting consent to proceed with cutting, including:
   1. Identification of Project.
   2. Description of affected Work and work of others.
   3. Necessity for cutting.
   4. Effect on other work and on structural integrity of location.
   5. Description of proposed Work. Designate:
      a) Scope of cutting and patching.
      b) CONTRACTOR, Subcontractor or trade to execute Work.
      c) Products proposed to be used.

d) Extent of refinishing.
e) Schedule of operations.

6. Alternatives to cutting and patching, if any.
7. Designation of party responsible for cost of cutting and patching.

B. Should conditions of Work, or schedule, indicate change of materials or methods, submit a written recommendation to the ENGINEER, including:
1. Conditions indicating change.
2. Recommendations for alternative materials or methods.
3. Submittals as required for substitutions.

C. Submit written notice to the ENGINEER, designating time Work will be uncovered, to provide for observation. Do not begin cutting or patching operations until authorized by the ENGINEER.

D. Provide shoring, bracing and support to maintain the structural integrity and protect adjacent Work from damage during cutting and patching.

E. Conform to all applicable Specifications for application and installation of materials used for patching.

PART 2 PRODUCTS

(Not Used)

PART 3 EXECUTION

(Not Used)

END OF SECTION 01045

SECTION 01091
REFERENCE STANDARDS

PART 1 GENERAL

1.1 SECTION INCLUDES

A. Reference standards to be used on this project.

1.2 REFERENCE STANDARDS

A. Comply with the requirements and recommendations of all stated reference standards, except when they are modified by the Contract Documents, or when applicable laws, ordinances, rules, regulations or codes establish stricter standards. The latest version of all noted standards shall apply to this Work, unless otherwise specified. Reference standards include, but are not necessarily limited to, the following:

AMCA	-	Air Moving and Conditioning Association, Inc.
ACI	-	American Concrete Institute.
ACIFS	-	American Cast Iron Flange Standards.
AFBMA	-	Anti-Friction Bearing Manufacturers Association.
AGA	-	American Gas Association.
AGMA	-	American Gear Manufacturers Association.
AIA	-	American Institute of Architects.
AISC	-	American Institute of Steel Construction.
AISI	-	American Iron and Steel Institute.
ANSI	-	American National Standards Institute.
ASCE	-	American Society of Civil Engineers.
ASHRAE	-	American Society of Heating, Refrigeration, and Air Conditioning Engineers.
ASME	-	American Society of Mechanical Engineers.
ASTM	-	American Society for Testing and Materials.
AWS	-	American Welding Society.
AWWA	-	American Water Works Association.
CGA	-	Compressed Gas Association.
CRSI	-	concrete Reinforcing Steel Institute.
DIPRA	-	Ductile Iron Pipe Research Association.
EEI	-	Edison Electric Institute.
EJMA	-	Expansion Joint Manufacturers' Association.
FM	-	Factory Mutual.
HMI	-	Hoist Manufacturers' Institute.
IEEE	-	Institute of Electrical and Electronic Engineers.

IPCEA	-	Insulated Power Cable Engineers Association.
NACE	-	National Association of Corrosion Engineers.
NBS	-	National Bureau of Standards.
NEC	-	National Electric Code.
NEMA	-	National Electrical Manufacturers Association.
NFPA	-	National Fire Protection Association.
OSHA	-	Occupational Safety and Health Act.
PCA	-	Portland Cement Association.
PCI	-	Prestressed Concrete Institute.
RMA	-	Rubber Manufacturers' Association.
SMACCNA	-	Sheet Metal and Air Conditioning Contractors National Association.
SPI	-	Society of the Plastics Industry.
SSPC	-	Steel Structures Painting Council.
STI	-	Steel Tank Institute.
UL	-	Underwriters' Laboratory.

B. When required, furnish evidence satisfactory to the ENGINEER, that the materials and methods used are in accordance with the standards specified.

PART 2 PRODUCTS

(Not Used)

PART 3 EXECUTION

(Not Used)

END OF SECTION 01091

SECTION 01120
DECONTAMINATION OF PERSONNEL AND EQUIPMENT

PART 1 GENERAL

1.1 SECTION INCLUDES

A. Labor, materials, and equipment necessary for the decontamination of all personnel, heavy equipment, drilling, driving equipment, sampling equipment, and miscellaneous equipment.

1.2 DECONTAMINATION

A. Supply all decontamination equipment, facilities, and supplies.

B. All personnel shall be decontaminated before leaving the site, as specified in the Site Health and Safety Plan.

C. Equipment shall be cleaned and decontaminated prior to use onsite, and prior to leaving the site.

D. All equipment shall be washed and cleaned in accordance with the requirements of the Site Health and Safety Plan, and approved by the OWNER's representative prior to initiation of work at the site.

F. All decontamination water shall be placed in sealed, DOT approved 55-gallon drums and relocated to a location on-site for temporary storage as designated by the ENGINEER. All containers shall be labeled and dated. The CONTRACTOR shall provide all required 55-gallon drums.

1.3 TRANSPORTATION OF HAZARDOUS WASTE

A. All hazardous waste material shall be transported to an approved TSDF or other USEPA designated site in accordance with all applicable EPA, RCRA, Rhode Island DOT, Federal DOT, or other Federal, State, and local regulations.

PART 2 - PRODUCTS

2.1 GENERAL

A. Provide all equipment necessary for decontamination, such as clean and distilled water, trisodium phosphate, acetone, methanol, a mobile hot-water high-pressure washer, buckets and brushes, etc.

PART 3 EXECUTION

3.1 GENERAL

A. Follow the general decontamination plans, as specified in the Site Health and Safety Plan. Prior to mobilization, finalize all personnel-decontamination needs, equipment, and procedures with the ENGINEER.

3.2 EQUIPMENT DECONTAMINATION

A. Heavy equipment shall be decontaminated prior to arrival on-site and before leaving the project site. Decontamination shall consist of the following:
   1. Non-phosphate detergent plus tap water wash.
   2. Tap water rinse.
   3. 10% nitric acid rinse.
   4. Tap water rinse.
   5. Hexane (pesticide grade) rinse.
   6. Deionized water rinse.
   7. Total air dry.

B. All drilling equipment and materials will be decontaminated prior to any drilling operations and between borings. All tools used for soil sampling and packaging, including split-spoon samplers, sample-cutting knives, etc., will be decontaminated prior to the collection of each sample. Well casing, screens, and fittings are to be delivered to the site in a clean condition and decontaminated onsite in the presence of the ENGINEER.

C. Decontamination of heavy equipment shall include the following:
   1. Scrape and remove all earthen materials from the equipment.
   2. Hose down equipment with a portable high-pressure, hot-water washer (steam cleaner).

D. At a minimum, all heavy equipment tires or support vehicles shall be cleaned with the steam cleaner prior to traveling on any public roads.

3.3 PERSONNEL DECONTAMINATION

A. Perform personnel decontamination prior to leaving the site. Provide all protective clothing and equipment necessary to comply with the decontamination procedures as specified in the Site Health and Safety Plan.

B. The following personnel decontamination procedures shall be followed:
   1. Remove disposable booties and place in plastic bag for disposal.
   2. Wash neoprene boots with detergent solution and rinse with clean water. Remove boots and retain for subsequent reuse.
   3. Wash outer gloves in detergent solution and rinse in clean water. Remove outer gloves and place into plastic bag for disposal or retain for subsequent reuse.
   4. Remove Tyvek or SARNEX coveralls (if used). Take care to prevent the release and dispersion of dusts which may have accumulated on the coveralls during onsite operations and place overalls into a disposable plastic bag.
   5. Remove the respirator (if used) and place spent filters into the plastic bag destined for disposal. Place the respirator onto a reusable table or into a separate plastic bag for later cleaning and disinfection.
   6. Remove disposable gloves.
   7. Thoroughly wash hands and face.
   8. If concentrations reach Level C, disposable items that were onsite will be placed in a 55-gallon drum with other solid wastes for eventual disposal.

END OF SECTION 01120

SECTION 01200
PRE-CONSTRUCTION CONFERENCE

PART 1 GENERAL

1.1 SECTION INCLUDES

A. Information on date, time, location required attendance and agenda for the Pre-Construction Conference.

1.2 PRE-CONSTRUCTION CONFERENCE

A. Conference will be held after execution of the Contract and before construction is started. The ENGINEER will set the date, time and location of the Pre-Construction Conference.

B. The ENGINEER shall prepare the agenda, preside at meeting, prepare and distribute a transcript of proceedings to all parties.

C. CONTRACTOR shall provide data required, contribute appropriate items for discussion, and be prepared to discuss all items on agenda.

1.3 REQUIRED ATTENDANCE

A. OWNER, or OWNER'S REPRESENTATIVE.

B. ENGINEER.

C. CONTRACTOR and suppliers.

1.4 AGENDA

A. The meeting agenda will include, but will not be limited to, the following:
   1. Designation of responsible personnel.
   2. Subcontractors.
   3. Coordination with other contractors.
   4. Construction schedule.
   5. Processing of Shop Drawings and distribution of Submittals.
   6. Processing of field decisions and Change Orders.
   7. Requirements for copies of Contract Documents.
   8. Insurance in force.
   9. Schedule of Values.

10. Processing and Schedule of Payments.
11. Use of premises.
12. CONTRACTOR responsibility for Health & Safety and first aid procedures.
13. Security.
14. Housekeeping.
15. Field Offices.
16. Record Drawings.
17. Any other project related items.

PART 2 PRODUCTS

(Not Used)

PART 3 EXECUTION

(Not Used)

END OF SECTION 01200

SECTION 01210
PROGRESS MEETINGS

PART 1 GENERAL

1.1 SECTION INCLUDES

A. Information on monthly progress meetings during construction

1.2 PROGRESS MEETINGS

A. Date and Time:
   1. Regular Monthly Meetings: As mutually agreed upon by ENGINEER and CONTRACTOR.

B. Place: CONTRACTOR'S field office at the Project Site or another mutually agreed upon location.

C. ENGINEER shall prepare agenda, preside at meetings, and prepare and distribute a transcript of proceedings to all parties.

D. CONTRACTOR shall provide data required and be prepared to discuss all items on agenda.

1.3 MINIMUM ATTENDANCE

A. CONTRACTOR, other contractors, and suppliers. Representatives present for each party shall be authorized to act on their behalf.

B. ENGINEER.

C. OWNER's Representative.

D. Others as appropriate.

1.4 AGENDA

A. Agenda will include, but will not necessarily be limited to, the following:
   1. Transcript of previous meeting.
   2. Progress since last meeting.
   3. Planned progress for next period.
   4. Shop Drawings.

5. Problems, conflicts and observations.
6. Change Orders.
7. Applications for payment.
8. Quality standards and control.
9. Schedules, including off-site fabrication and delivery schedules. Corrective measures required.
10. Coordination between parties.
11. Health and Safety Issues.
12. Other business.

PART 2 PRODUCTS

(Not Used)

PART 3 EXECUTION

(Not Used)

END OF SECTION 01210

SECTION 01300
SUBMITTALS

PART 1 GENERAL

1.1 SECTION INCLUDES

A. General requirements for submitting coordinated shop drawings, product data, and samples prior to commencing with the Work, and responsibilities for preparation and review of the submittals.

1.2 RELATED SECTIONS

A. General Conditions.

1.3 SHOP DRAWINGS

A. General

1. Submit working drawings, test reports, and data on materials (hereinafter in this Section called data), and material samples (hereinafter in this Section called samples) as required for the proper control of Work, including but not limited to those working drawings, data, and samples for materials specified elsewhere in the Specifications and on the Drawings.

B. Contractor's or subcontractor's Drawings made specifically for this Work

1. Shop drawings shall provide sufficient data, including layout, fabrication, and erection details to establish evidence of compliance with the Contract Documents.

2. Do not use reproductions of Contract Drawings as shop drawings.

3. Identify details by reference to sheet and detail numbers shown on the Drawings and by reference to paragraphs of Specification section.

C. Manufacturer's Standard Schematic Drawings

1. Modify drawings to delete information which is not applicable to Work. Drawings showing information which is not applicable will be returned without review.

2. Add supplemental information applicable to Work.

1.4 PRODUCT DATA

A. Manufacturer's Catalog Sheets, Brochures, Diagrams, Schedules, Performance Charts, Illustrations, and Other Standard Descriptive Data.

1. Clearly mark each copy to identify materials, products, or models applicable to this project. Submittals not marked shall be returned without review.

2. Where product data is printed in color and requires color for evaluation, all copies submitted shall be in original colors as published.

3. Show dimensions and clearances required.

4. Show performance, characteristics, and capacities.

1.5 SAMPLES

A. Samples of products proposed for use shall be submitted and of sufficient size and quantity in accordance with individual specification sections.

1.6 SUBMITTAL REQUIREMENTS

A. Submit layout, detail, and shop drawings in accordance with this section. When a submittal is requested to the Engineer, submit a copy of the transmittal cover letter to the Owner.

B. Do not combine submittals of more than one (1) product or specification section.

C. Submit four (4) complete sets of copies of each shop drawing and product data in addition to those required by the Contractor.

D. Submittals shall include the following information:

1. Relation to adjacent materials.

2. Field dimensions, clearly identified as such.

3. Finishes.

4. Shipping weights.

5. Gauges, fastenings, reinforcements, welding details.

6. Applicable standards, such as ASTM or Federal Specification numbers.

7. A blank space, 3 inches x 10 inches for the Engineer's stamp.

E. Contractor's stamp, initialed or signed, shall certify its approval of the submittal that verification of field measurements, coordination with all trades involved, and compliance with Contract Documents has been accomplished. Contractor shall not be relieved of responsibility for any deviation from the requirements of the Contract Documents by the Engineer's approval of shop drawings, product data or samples unless the Contractor has specifically informed the Engineer, in writing, of such deviation at the time of submission and the Engineer has given written approval to the specific deviation. Contractor shall not be relieved from responsibility for errors or omissions in the shop drawings, product data, or samples by the Engineer's approval thereof.

F. Substitutions for "or equal" products shall be as follows: "Any other additional cost incurred by the Owner or to any other Contractor as a result of the proposed substitution of equipment and/or material shall be borne by the Contractor who has proposed the substitution".

1.7 ENGINEER'S RESPONSIBILITIES

A. If Contractor does not review submittals before sending them to the Engineer, they will be returned unchecked.

B. Review submittals and return within two (2) weeks of their receipt.

C. Review for conformance to design concept of Work and information in Contract Documents. Review of separate items does not constitute review of an assembly in which item functions.

D. Affix stamp and date certifying review of submittals.

E. Return submittals to Contractor with approval or directions to correct and re-submit.

F. The Engineer's action on submittals will result in the making of one of the following notations with related meanings:

1. APPROVED - The work involved may proceed, and no further submission is required.

2. APPROVED - SUBJECT TO CORRECTIONS MARKED - The work involved may proceed providing submittal is corrected and resubmitted for record. Approval does not authorize changes to Contract Sum unless stated in a separate letter or Change Order. In the event any comment made to the submittal by the Engineer results in a change in the Contract Sum, the Engineer shall be notified immediately and fabrication may not be undertaken until written authorization to proceed is issued.

3. EXAMINED AND RETURNED FOR CORRECTION - The work involved may not proceed. Submittal must be corrected/redrawn and resubmitted.

1.8 RE-SUBMITTAL REQUIREMENTS

A. Identification of Changes - Clearly identify changes made from the initial submittal other than those requested by the Engineer. The Engineer will review only those changes he requested and those identified by the Contractor.

B. Make re-submittals as specified in paragraph 1.6 of this Section.

PART 2 PRODUCTS

(Not Used)

PART 3 EXECUTION

(Not Used)

END OF SECTION 01300

SECTION 01310
CONSTRUCTION SCHEDULES

PART 1 GENERAL

1.1 SECTION INCLUDES

A. Coordinated preparation, submittal, review, and maintenance of a construction schedule and monthly progress reports.

1.2 RELATED SECTIONS

A. General Conditions.

B. Section 01300 - Submittals.

1.3 SUBMITTALS

A. Submit to the Engineer for review and comment, within 10 days after the notice to proceed, three (3) copies of a preliminary progress schedule covering operations for the first 30 days. The preliminary progress schedule shall be a bar graph or an arrow diagram showing the times for start and completion of the various work planned to be started during the first 30 days.

B. Submit to the Engineer for review and comment, within 10 days after the notice to proceed, three (3) copies of a critical path-type analysis. The critical path-type analysis shall include a graphic network diagram, list of activities, and a brief written explanation of the proposed schedule. Submit two activity listings in two formats: sorted by activity number; sorted by total float then early start.

C. Submit updated monthly progress schedules with that months' Request for Payment to the Engineer for review and comment.

1.4 CONSTRUCTION SCHEDULE

A. The graphic network diagram shall consist of an arrow diagram, precedence diagram, or a geometric figure and connector diagram which clearly depicts the order and interdependencies of activities planned by the Contractor as well as activities by others which effect the Contractor's planning. Show the intended time for starting and completing each activity, the associated float time, and the quantity and kinds of major equipment to be used for each construction operation.

B. For those activities lasting more than 30 days, show either the estimated time for

25-, 50-, and 75-percent completion, or other significant milestones in the course of the activity. In addition to the actual construction operations, the network diagram shall show such items as submittal of samples and shop drawings, delivery of materials and equipment, construction in the area by other forces, and other significant items related to the progress of the construction. The graphic network diagram shall be printed neatly and legibly drawn to a time scale.

C. Activities shown shall be coordinated with the Contractor's bid items. Show types of work and minimum number of activities of each type.

D. Show for each activity the identification number, activity description, duration, the earliest starting and finishing dates, the latest starting and finishing dates, and the float or slack time. Identify activities which constitute the critical sequence whose float is zero.

E. Include sufficient information to describe the construction methods to be used to enable the Engineer to evaluate the schedule and supporting analysis for validity and practicality. If the schedule or written explanation is not accepted by the Engineer, re-submit in accordance with Section 01300.

1.5 MONTHLY PROGRESS REPORTS

A. Monthly progress reports shall list those uncompleted activities which have less than 90 days float and which are either in progress or scheduled to be started within the next reporting period. For each of the listed activities, show the following:

1. Early and late start and finish.

2. Actual start date.

3. Total float.

4. Activity description.

B. If the noted starting dates or durations delay the scheduled project completion date, the delay shall be noted. Give reasons for delay with an explanation of the Contractor's proposed corrective action. Note each activity completed during the report period.

1.6 REVISIONS

A. Submit a revised critical path-type analysis when one or more of the following conditions occur:

1. When a change order significantly affects the Contract completion date or the sequence.

2. When progress of any critical activity falls significantly behind the scheduled progress.

3. When delay on a non-critical activity is of such magnitude as to change the course of the critical path.

B. Submit the revised analysis in the same form and detail as the original submittal with explanation of the reasons for the revisions.

1.7 PROSECUTION OF WORK

A. Prosecute the Work in accordance with the latest critical path-type analysis. Deviations therefrom shall be submitted to the Engineer for review. In the event that the progress of items along the critical path is delayed, revise planning to include additional force, equipment, shifts, or hours as necessary to meet the Contract completion date. All additional costs resulting therefrom will be borne by the Contractor.

PART 2 PRODUCTS

(Not Used)

PART 3 EXECUTION

(Not Used)

END OF SECTION 01310

SECTION 01380
CONSTRUCTION PHOTOGRAPHS

PART 1 GENERAL

1.1 SECTION INCLUDES

A. Periodic photographs recording the progress of the work.

1.2 PHOTOGRAPHY

A. Retain a qualified professional photographer to perform the services specified in this Section.

B. Pay for the photographer's services and supplies for the duration of the Project.

C. Provide access, health, and safety equipment and supplies as required to the photographer for the duration of the Project.

1.3 PROJECT PHOTOGRAPHS

A. Record the important features of the site prior to the commencement of work, during construction, and after the work has been completed.

B. Before work begins, take a minimum of 50 views, including but not limited to, views of the site locations of the future pretreatment plant, and areas of excavation. The locations will be designated by the ENGINEER.

C. Take progress photographs throughout the project.

D. The progress photographs shall be 4 x 6 inches.

E. The progress photographs shall include, but not be limited to coverage of the following:
   1. Initial and completed views of the general site conditions.
   2. Future and existing recovery well locations.
   3. Temporary/final fencing.
   4. Easements, staging area and access roads.
   5. Temporary construction facilities.
   6. Decontamination of personnel and equipment.
   7. Groundwater Capture System.
   8. Pretreatment System.

9. Soil Vapor Extraction System Construction.
10. Utility trench.
11. Civil, electrical, structural, instrumentation and HVAC progress intervals.
12. Final site clean-up and restoration.
13. Unanticipated events.

F. After completion of the work, the shall take a minimum of 50 views. Total project photographs shall be 300 views.

1.4 VIEWS REQUIRED

A. Prints will illustrate condition and location of work and the state of progress.

B. At successive periods of photography, the CONTRACTOR shall take at least one photograph from the same overall view as previously required.

C. Consult with the ENGINEER at each period of photography for recommendations concerning views required.

1.5 DELIVERY OF PRINTS

A. The CONTRACTOR shall submit to the ENGINEER two (2) prints of each photograph taken prior to the commencement of work and after the completion of work, along with the negatives within ten (10) calendar days after taking the photographs, or as approved by the ENGINEER.

B. The CONTRACTOR shall submit to the ENGINEER two prints of each progress photograph along with the negatives within ten (10) calendar days after taking the photographs or as approved by the ENGINEER.

C. All photographs are the OWNER's property and will not be released to the public or news media by the CONTRACTOR, SUB-CONTRACTOR or any others. The photographs should be enclosed back-to-back in a double-face plastic sleeve punched to fit standard three-ring binders.

1.6 PRINTS

A. All prints shall be color.

PART 2 PRODUCTS

(Not Used)

PART 3 EXECUTION

(Not Used)

END OF SECTION 01380

SECTION 01540
PROTECTION OF THE WORK AND PROPERTY

PART 1 GENERAL

1.1 SECTION INCLUDES

A. Precautions and programs to protect the Work and all public, private property and facilities from damage.

1.2 PROTECTION OF WORK

A. In order to prevent damage, injury or loss, CONTRACTOR'S actions shall include, but not be limited to, the following:

1. Store apparatus, materials, supplies, and equipment in an orderly, safe manner that will not unduly interfere with the progress of the Work or the Work of any other Contractor or utility service company.
2. Provide suitable storage facilities for all materials which are subject to injury by exposure to weather, theft, breakage, or otherwise.
3. Place upon the Work or any part thereof only such loads as are consistent with the safety of that portion of the Work.
4. Clean up frequently all refuse, rubbish, scrap materials, and debris caused by his operations, to the end that at all times the site of the Work shall present a safe, orderly and workmanlike appearance.
5. Provide barricades and guard rails around openings, for scaffolding, for temporary stairs and ramps, around excavations, elevated walkways and other hazardous areas.

B. Do not, except after written consent from the proper parties, enter or occupy with people, tools, materials or equipment, privately-owned land except on easements approved by the ENGINEER.

C. Assume full responsibility for the preservation of all public and private property or facility on or adjacent to the site. If any direct or indirect damage is done by or on account of any act, omission, neglect or misconduct in the execution of the Work by the CONTRACTOR, it shall be restored by the CONTRACTOR, at his expense, to a condition equal to that existing before the damage was done.

D. Following completion of the Work, damages to curbs, sidewalks, driveways, lawns, shrubbery, monuments or other property caused by CONTRACTOR, shall be repaired at the CONTRACTOR'S expense in a manner acceptable to the ENGINEER. The CONTRACTOR may take photographs to document damage which existed prior to construction.

E. CONTRACTOR shall submit to the ENGINEER lists of damages to property that exist prior to construction or construction related activity. The lists shall be submitted in the sequence with the construction progress and shall be submitted sufficiently in advance for ENGINEER to verify the damages. The lists shall include the following information:

1. Location of damage.
2. Nature of damage.
3. Extent of damage.

F. CONTRACTOR shall expeditiously and satisfactorily resolve all claims and complaints arising as a result of Work under this Contract. CONTRACTOR shall provide the services of an authorized representative during normal working hours for the purpose of handling all such claims and complaints. A file shall be maintained to log all claims and complaints and shall include the date and time, name of person filing the claim or complaint, nature and extent of the claim or complaint and its resolution. CONTRACTOR must advise ENGINEER monthly in writing of all such claims and complaints received by him including the status of

each, and for each claim or complaint that has been secured by his insurance company, proof that such has been done.

G. CONTRACTOR shall pay for all costs to handle and resolve any claims or complaints. If, within 90 days of receipt of a complaint, CONTRACTOR fails to settle or secure any claim or complaint, as determined by ENGINEER, OWNER may retain such amounts of money from payments that would otherwise be due CONTRACTOR as, in the opinion of OWNER, may be required to settle all claims filed with OWNER.

1.3 BARRICADES AND WARNING SIGNALS

A. Where Work is performed on or adjacent to any roadway, right-of-way, or public place, CONTRACTOR shall furnish and erect barricades, fences, lights, warning signs, and danger signals, and shall take other precautionary measures for the protection of persons or property and of the Work. Barricades shall be painted to be visible at night.

1.4 PROTECTION OF EXISTING STRUCTURES

A. Underground Structures:

1. Underground structures are defined to include, but not be limited to, all sewer, water, gas, and other piping, and manholes, chambers, electrical conduits, tunnels and other existing subsurface work located within or adjacent to the Contract limits.
2. Underground structures known to ENGINEER except water, sewer, electric and telephone service connections are shown on the Drawings. This information is shown for the assistance of CONTRACTOR in accordance with the best information available, but is not guaranteed to be correct or complete.
3. CONTRACTOR shall explore ahead of his trenching and excavation Work and shall uncover all obstructing underground

structures sufficiently to determine their location, to prevent damage to them and to prevent interruption to the services which such structures provide. If CONTRACTOR damages an underground structure, he shall restore it to original condition at his expense.

4. Necessary changes in the location of the work may be made by ENGINEER, to avoid unanticipated underground structures.

5. If permanent relocation of an underground structure or other sub-surface facility is required and is not otherwise provided for in the Contract Documents, ENGINEER will direct CONTRACTOR in writing to perform the Work, which shall be paid for under the provisions of the General Conditions.

B. Surface Structures:

1. Surface structures are defined as all existing buildings, structures and other facilities above the ground surface. Included with such structures are their foundations or any extension below the surface. Surface structures include, but are not limited to, buildings, tanks, walls, bridges, roads, dams, channels, open drainage, piping, poles, wires, posts, signs, markers, curbs, walks and all other facilities that are visible above the ground surface.

C. Protection of Underground and Surface Structures:

1. CONTRACTOR shall sustain in their places and protect from direct or indirect injury all underground and surface structures located within or adjacent to the limits of the Work. Such sustaining and supporting shall be done carefully and as required by the party owning or controlling such structure. Before proceeding with the work of sustaining and supporting such structure, CONTRACTOR shall satisfy ENGINEER that the methods and procedures to be used have been approved by the party owning same.

2. CONTRACTOR shall assume all risks attending the presence or proximity of all underground and surface structures within or adjacent to the limits to the Work. CONTRACTOR shall be responsible for all damage and expense for direct or indirect injury caused by his Work to any structure. CONTRACTOR shall repair immediately all damage caused by his work, to the satisfaction of the owner of the damaged structure.

D. All other existing surface facilities, including but not limited to, guard rails, posts, guard cables, signs, poles, markers, and curbs which are temporarily removed to facilitate installation of the Work shall be replaced and restored to their original condition at CONTRACTOR'S expense.

1.5 PROTECTION OF FLOORS AND ROOFS

A. CONTRACTOR shall protect floors and roofs during entire construction period.

B. Proper protective covering shall be used when moving heavy equipment, handling materials or other loads, when painting, handling mortar and grout and when cleaning walls and ceilings.

C. Use metal plans to collect all oil and cuttings from pipe, conduit, or rod threading machines and under all metal cutting machines.

D. Concrete less than 28 days old shall not be loaded without written permission of the ENGINEER. No floor, roof or slab shall be loaded in excess of its design loading.

E. Roofs shall not be loaded without written permission of the ENGINEER.

F. CONTRACTOR shall restrict access to roofs and keep clear of existing roofs except as required by the new Work.

G. If access to roofs is required, roofing, parapets, openings and all other construction on or adjacent to roof shall be protected with suitable plywood or other approved means.

1.6 PROTECTION OF INSTALLED PRODUCTS AND LANDSCAPING

A. Provide protection of installed products to prevent damage from subsequent operations. Remove protection facilities when no longer needed, prior to completion of Work.

B. Control traffic to prevent damage to equipment, materials and surfaces.

C. Provide coverings to protect equipment and materials from damage.
   1. Cover projections, wall corners, and jambs, sills and soffits of openings, in areas used for traffic and passage of products in subsequent work.

PART 2 PRODUCTS

(Not Used)

PART 3 EXECUTION

(Not Used)

END OF SECTION 01540

SECTION 01545
SECURITY

PART 1 GENERAL

1.1 SECTION INCLUDES

A. Protection of all Work, materials, equipment and property from loss, theft, damage and vandalism.

1.2 SECURITY

A. Safely guard property, including the OWNER'S property, and other private property from injury or loss in connection with the performance of the Contract.

B. Employ watchmen as needed to provide the required security and prevent unauthorized entry.

C. Make no claim against the OWNER for damage resulting from trespass.

D. Party responsible for security shall make good all damage to property of OWNER and others arising from failure to provide adequate security.

E. If existing fencing or barriers are breached or removed for purposes of construction, CONTRACTOR shall provide and maintain temporary security fencing equal to the existing in a manner satisfactory to the ENGINEER and OWNER.

F. Maintain security program throughout construction and occupancy precludes need for CONTRACTOR'S security program.

1.3 CONTRACTOR'S ACCESS TO THE SITE

A. The CONTRACTOR shall provide a uniformed guard to control movement to and from the site. The guard shall be provided continuously between the hours of 5:00 p.m. and 7:00 a.m., Monday through Friday, for the duration of this Contract. No separate payment shall be made for the services of the uniformed guard. It is the responsibility of the CONTRACTOR to insure that the Gate not be left unguarded at any time during the hours stated above. If access is required by the CONTRACTOR at times other than that specified above, the CONTRACTOR shall furnish a uniformed guard as required. The cost of this extra uniformed guard service shall be borne by the CONTRACTOR.

B. Access to the site for CONTRACTOR'S employees, material, tools and equipment shall be only through the Main Gate.

PART 2 PRODUCTS

(Not Used)

PART 3 EXECUTION

(Not Used)

END OF SECTION 01545

SECTION 01550
ACCESS ROADS AND PARKING AREAS

PART 1 GENERAL

1.1 SECTION INCLUDES

A. Provide all temporary construction roads, walks and parking areas required beyond the designated available space during the construction and for use of emergency vehicles.

1.2 ACCESS ROADS AND PARKING

A. Temporary roads and parking areas shall be designed and maintained by CONTRACTOR so as to be fully usable in all weather conditions.

B. Prevent interference with traffic and OWNER'S operations on existing roads. Contractor shall indemnify and hold harmless the OWNER from any expenses caused by CONTRACTOR'S operations over these roads.

C. Roadways damaged by CONTRACTOR shall be restored to their original condition by CONTRACTOR subject to approval of the OWNER or ENGINEER.

D. Temporary roads, walks and parking areas shall be removed by CONTRACTOR prior to final acceptance and the ground returned to its original condition, unless otherwise required by the Contract Documents.

PART 2 PRODUCTS

(Not Used)

PART 3 EXECUTION

(Not Used)

END OF SECTION 01550

SECTION 01560
ENVIRONMENTAL CONTROLS

PART 1 GENERAL

1.1 SECTION INCLUDES

A. Methods, equipment, and temporary construction, to provide controls over environmental conditions at the construction site and adjacent areas.

1.2 NOISE CONTROL

A. CONTRACTOR'S vehicles and equipment shall be such as to minimize noise to the greatest degree practicable. Noise levels shall conform to the latest OSHA standards and in no case will noise levels be permitted which interfere with the Work.

1.3 DUST CONTROL

A. Control objectionable dust caused by operation of vehicles and equipment, clearing or for any reasons. Dust control methods shall be approved by the ENGINEER.

1.4 PEST AND RODENT CONTROL

A. Provide rodent and pest control (as necessary) to prevent infestation of construction and/or storage area.
   1. Employ methods and use materials which will not adversely affect conditions at the Site or on adjoining properties.

1.5 WATER CONTROL

A. Provide methods to control surface water and water from excavations and structures to prevent damage to the Work, the Site, or adjoining properties.
   1. Control fill, grading and ditching to direct water away from excavations, pits, tunnels and other construction areas; and to direct drainage to proper runoff courses so as to prevent any erosion, damage or nuisance.

B. Provide, operate and maintain equipment and facilities of adequate size to control surface water.

C. Dispose of drainage water in a manner to prevent flooding, erosion, or other damage to any portion of the Site or to adjoining areas and in conformance with all environmental requirements.

1.6 POLLUTION CONTROL

A. Provide methods, means and facilities required to prevent contamination of soil, water or atmosphere by the discharge of noxious substances from construction operations.

B. Provide equipment and personnel, perform emergency measures required to contain any spillages, and to remove contaminated soils or liquids.
   1. Excavate and dispose of any contaminated earth off-site, and replace with suitable compacted fill and topsoil.

C. Take special measures to prevent harmful substances from entering public waters.
   1. Prevent disposal of wastes, effluents, chemicals, or other such substances adjacent to streams, rivers, sanitary or storm sewers.

D. Provide systems for control of atmospheric pollutants.
   1. Prevent toxic concentrations of chemicals.
   2. Prevent harmful dispersal of pollutants into the atmosphere.

E. CONTRACTOR'S equipment used during construction shall conform to all current federal, state and local laws and regulations.

1.7 EROSION CONTROL

A. Plan and execute construction work and earthwork by methods to control surface drainage from cuts and fills, and from borrow and waste disposal areas, to prevent erosion and sedimentation.
   1. Hold the areas of bare soil exposed at one time to a minimum.
   2. Provide temporary control measures such as berms, dikes and drains.

B. Construct fills and waste areas by selective placement to eliminate surface silts or clays which will erode.

C. Periodically inspect earthwork to detect any evidence of the start of erosion, apply corrective measures as required to control erosion.

PART 2 PRODUCTS

(Not Used)

PART 3 EXECUTION

(Not Used)

END OF SECTION 01560

SECTION 01590
TEMPORARY CONSTRUCTION FACILITIES

PART 1 GENERAL

1.1 SECTION INCLUDES

A. Temporary construction facilities that are required for the completion of the Work.

1.2 TEMPORARY FACILITIES

A. Provide all arrangements with utility service companies (except for electricity) for temporary services.

B. Temporary construction facilities that are CONTRACTOR'S responsibility include:
   1. Water.
   2. Telephone.
   3. Heat, Weather Protection and Ventilation.
   4. Fire Protection.
   5. Sanitary and First Aid Facilities.
   6. Lighting.

C. Abide by all rules and regulations of the utility service company or authority having jurisdiction.

D. Sufficient temporary heat and ventilation shall be provided to assure safe working conditions and that no damage will occur to any of the Work. In addition, all enclosed areas of the building in which the Work is performed shall be maintained at a minimum of 50°F, unless otherwise specifically excepted in the Specifications.

E. Provide all materials and equipment required for distribution of temporary electricity and lighting. Include continuous power for construction site offices. Provide all outlets with circuit breaker protection and comply with ground fault protection requirements of OSHA and NEC. Minimum lighting shall be 5 foot candles for open areas, 10 foot candles for stairs and shops. Provide minimum of one 300 watt lamp for each 400 square feet on 20 foot centers in Work areas. OWNER'S electrical services will be made available for temporary power and lighting as follows:
   1. 100 ampere, 480 volt, 3 phase service terminated at a disconnect switch in the vicinity of the pretreatment system construction area.

F. Suitably enclosed chemical or self-contained toilets shall be provided for the use of the persons employed on the Work. Toilets shall be located near the Work site and secluded from observation insofar as possible. Toilets shall be serviced at regular intervals, kept clean and supplied throughout the course of the Work.

G. Furnish and maintain a safe drinking water supply readily available to all workers.

H. CONTRACTOR shall be responsible for all utility service costs until the Work is substantially complete. Included are all fuel, heat and other utility services necessary for execution, completion, testing and initial operation of the Work.

I. CONTRACTOR shall:
   1. Comply with all applicable requirements specified in Divisions 15 and 16.
   2. Maintain and operate the temporary systems to assure continuous service.
   3. Modify and extend systems as Work progress.
   4. Completely remove temporary materials and equipment when their use is no longer required.
   5. Clean and repair damage caused by temporary installations or use of temporary facilities.
   6. Restore existing facilities used for temporary services to specified or to original condition. This includes restoration of lawns to areas where staging was performed.

PART 2 PRODUCTS

(Not Used)

PART 3 EXECUTION

(Not Used)

END OF SECTION 10590

SECTION 01610
STORAGE OF MATERIALS

PART 1 GENERAL

1.1 SECTION INCLUDES

A. Storage and protection of materials in accordance with manufacturer's recommendations and requirements of Specifications.

1.2 STORAGE OF MATERIALS

A. Make all arrangements and provisions necessary for the storage of materials and equipment. All excavated materials, construction equipment, materials and equipment to be incorporated into the Work shall be placed in a location so as not to injure any part of the Work or existing facilities. Provide free access at all times to all parts of the Work and to all public utility installations in the vicinity of the Work. Materials and equipment shall be kept neatly and compactly stored in locations that will cause a minimum of inconvenience to other contractors, public travel, adjoining owners, tenants and occupants. Arrange storage in a manner to provide easy access for inspection.

B. Areas available on the construction site for storage of material and equipment shall be or approved by the ENGINEER.

C. The ENGINEER reserves the option to require the CONTRACTOR to vacate an assigned storage area with 60 days notice. The ENGINEER shall designate another storage area of equivalent size for use of the CONTRACTOR.

D. Materials and equipment which are to become the property of the OWNER shall be stored to facilitate their inspection and insure preservation of the quality and fitness of the Work, including proper protection against damage by freezing and moisture. They shall be placed in inside storage areas unless otherwise acceptable to ENGINEER.

E. Lawns, grass plots or other private property shall not be used for storage purposes without the written permission of the ENGINEER or other person in possession or control of such premises.

F. CONTRACTOR shall be fully responsible for loss or damage of stored materials and equipment.

G. Do not open manufacturers' containers until time of installation unless recommended by the manufacturer or otherwise specified.

H. Do not store products in areas under construction unless approved in writing by the ENGINEER.

1.3 UNCOVERED STORAGE

A. The following types of materials may be stored out-of-doors without cover:

1. Masonry units.

2. Reinforcing steel.

3. Structural steel.

4. Piping.

5. Castings.

B. Store the above materials on wood blocking so there is no contact with the ground.

1.4 COVERED STORAGE

A. Rough lumber may be stored out-of-doors if covered with materials impervious to water.

B. Provide tie down covers with rope and slope to prevent accumulation of water on covers.

C. Store materials on wood blocking.

1.5 FULLY PROTECTED STORAGE

A. Store all products not listed above in buildings or trailers which have a concrete or wooden floor, a roof, and fully closed walls on all sides.

B. Provide heated storage space for materials that would be damaged by freezing.

C. Protect mechanical and electrical equipment from contamination by dust, dirt and moisture.

D. Maintain humidity at levels recommended by manufacturers for electrical and electronic equipment.

1.6 PANEL AND INSTRUMENTATION STORAGE

A. All panels, microprocessor based equipment and all other devices subject to damage or useful life decrease because of temperatures below 40°F or above 120°F, relative humidity above 90 percent, or exposure to rain shall not be stored on site.

B. Storage shall be in an insured climate-controlled warehouse. The OWNER shall have the right to inspect the equipment during normal working hours. Placed inside each panel or device shall be desiccant, volatile corrosion inhibitor blocks (VCI), a moisture indicator and maximum-minimum indicating thermometer. The panels and equipment shall be checked once per month. The desiccant, VCI and moisture indicator shall be replaced as often as required or every six months whichever occurs first. A certified record of the daily maximum and minimum temperature and humidity in the warehouse shall be available for inspection by the OWNER. A certified record of the monthly inspection noting maximum and minimum temperature for the month, condition of desiccant, VCI and moisture indicator shall also be available for inspection by the OWNER.

C. All costs for the storage shall be included in the Contract Price. Any panel or device which has been damaged by any cause or for which the storage temperatures or humidity range has been exceeded shall be replaced at no cost to the OWNER and shall not be cause for a delay in Contract completion.

D. The panels and equipment shall not be shipped to the plant site until field conditions are ready for installation including all slabs, walls, roofs, and environmental controls. The failure to have the plant site ready for installation shall not relieve the CONTRACTOR from meeting all Contract conditions.

1.7 MAINTENANCE OF STORAGE

A. Maintain periodic system of inspection of stored products on a scheduled basis to assure that:

1. State of storage facilities is adequate to provide required conditions.

2. Required environmental conditions are maintained on continuous basis.

3. Products exposed to elements are not adversely affected.

B. Mechanical and electrical equipment which requires long-term storage shall have complete manufacturer's instructions for servicing accompanying each item, with notice of enclosed instructions shown on exterior of package.

1. Comply with manufacturer's instructions on scheduled basis.

2. Space heaters which are part of the electrical equipment shall not be connected and operated continuously until equipment is placed in service.

PART 2 PRODUCTS

(Not Used)

PART 3 EXECUTION

(Not Used)

END OF SECTION 01610

SECTION 01620
INSTALLATION OF EQUIPMENT

PART 1 GENERAL

1.1 SECTION INCLUDES

A. Installation of equipment and materials to be incorporated into this project. This section supplements the Specification requirements presented in Divisions 2 through 16.

1.2 SHOP DRAWINGS

A. Shop Drawings, installation drawings and instructions furnished by the manufacturers shall be used by the CONTRACTOR in the installation of the equipment and materials.

1.3 ANCHOR BOLTS AND GROUT

A. Anchor and expansion bolts shall be furnished by the CONTRACTOR, as specified and required. Use expansion bolts only where shown or approved by ENGINEER. Anchor and expansion bolts shall be of specified materials with heavy hexhead nuts. Anchorage items shall conform to the applicable requirements of Section 03250.

B. Grouting shall be in accordance with Section 03600.

1.4 TRANSPORTING, HANDLING AND INSTALLING EQUIPMENT AND MATERIALS

A. Conform to requirements of Division 1.

B. Employ competent mechanics experienced in the installation of the types of equipment and materials to be furnished, and shall ensure that all equipment and materials are installed in accordance with the recommendations of the manufacturer.

C. All bolts, nuts and other fastenings shall be furnished by CONTRACTOR, and shall comply with the applicable requirements of Section 03250.

1.5 EQUIPMENT ERECTION

A. General: Conform to the following as a minimum.

1. Use only mechanics skilled in the handling, setting, aligning, leveling and adjusting of the type of equipment and materials furnished.

2. Use only an oil bath heater to expand couplings, gears, etc. Do not force or drive them on equipment shafts, nor subject them to an open flame or torch.

3. Wedging will not be permitted. Use least number of flat shims possible in leveling equipment. Shims shall be clean and free of slags. All shims, filling pieces, keys, packing red or white lead grout, or other materials necessary to properly align, level and secure apparatus in place shall be provided. When requested by ENGINEER, demonstrate that all elements are level and plumb. Grind as necessary to bring parts to proper bearing after erection.

4. Use proper tools in the assembly of equipment and materials to prevent deforming or marring the surface of shafts, nuts or other parts.

5. Connections requiring gaskets shall be tightened evenly all around to ensure uniform stress over the entire gasket area.

6. No equipment and materials shall be altered or repaired, and no burning or welding will be permitted on any parts having machined surfaces, except by written permission of the ENGINEER.

7. No rigging shall be done from any structure without the permission of the ENGINEER. The CONTRACTOR shall be completely responsible for damage to the structure resulting from his operations.

8. Use tools, equipment and materials that will not damage the structure or equipment.

9. Furnish and install plugs in lubrication holes to prevent entry of foreign material.

10. Electrical work, testing, lubricating and painting shall all comply with the requirements of Division 16.

B. Setting and Erection:

1. All units shall be carefully set and aligned on their foundations by qualified millwrights after their sole plates have been shimmed to true alignment at the anchor bolts. The anchor bolts shall be set in place and the nuts tightened against the shims. After the foundation alignments have been approved by the ENGINEER, the bedplates or wing feet of the equipment shall be further checked after securing to the foundations and, after confirmation of all

alignments, the sole plates shall be finally grouted in place. CONTRACTOR shall be responsible for the correct alignment of equipment with its associated piping. "Pipe springing" will not be allowed.

2. Misaligned holes shall be reamed. "Driving" of bolts or keys will not be permitted.

C. Alignment and Leveling:

1. All shafts, couplings and sheaves shall be field checked for alignment and adjusted to manufacturer's specifications where necessary.

2. Couplings shall be aligned while the equipment is free from all external loads.

3. Angular and parallel alignment shall be checked, and the actual alignment shall be recorded and submitted to the ENGINEER. Alignment shall be within manufacturer's recommended tolerance.

4. Dial indicators shall be used for the checking of angular and parallel alignment. During rotation of the half couplings in performance of this test, they shall be maintained in the same relative position, and the dial indicator readings shall be taken at the same place on the circumference of the coupling.

D. Threaded Connections:

1. A molybdenum disulfide anti-seize compound shall be applied to all threads in mechanical connections such as bolts, studs, cap screws, tubing, etc. unless otherwise indicated.

1.6 SERVICES OF MANUFACTURERS' REPRESENTATIVE

A. Equipment furnished under Division's 11 and 13 shall include the cost of competent, qualified representatives of manufacturers of all equipment to supervise the installation, adjustment and testing of the equipment and to instruct the operating personnel on operation and maintenance. The training time and additional requirements for furnishing services of manufacturers' representatives are detailed in the appropriate Sections of the Specifications.

B. A certificate from the manufacturer stating that the installation of the equipment is satisfactory, that the unit has been satisfactorily tested and is ready for operation, and that the operating personnel have been suitably instructed in the operation, lubrication and care of the unit shall be submitted within thirty days (30) of completion of the performance test.

PART 2 PRODUCTS

(Not Used)

PART 3 EXECUTION

(Not Used)

END OF SECTION 01620

SECTION 01630
SUBSTITUTIONS

PART 1 GENERAL

1.1 SECTION INCLUDES

A. Requests for review of a substitution shall conform to the requirements of the General Conditions and shall contain complete data substantiating compliance of proposed substitution with the Contract Documents.

1.2 CONTRACTOR'S OPTIONS

A. For materials or equipment (hereinafter products) specified only by reference standard, select product meeting that standard, by any manufacturer, fabricator, supplier or distributor (hereinafter manufacturer). To the maximum extent possible, provide products of the same generic kind from a single source.

B. For products specified by naming several products or manufacturers, select any one of the products or manufacturers named which complies with the Specifications.

C. For products specified by naming only one product or manufacturer and followed by words indicating that no substitution is permitted, there is no option and no substitution will be allowed.

D. Where more than one choice is available as a CONTRACTOR'S option, select product which is compatible with other products already selected or specified.

1.3 SUBSTITUTIONS

A. During a period of 60 days after date of commencement of Contract Time, ENGINEER will consider written requests from CONTRACTOR for substitution of products or manufacturers, and construction methods only in case of unavailability of products or other conditions beyond control of CONTRACTOR.

B. Submit 5 copies of request for substitution. Submit separate request for each substitution. In addition to requirements set forth in the General Conditions, include in request the following:
   1. For products or manufacturers:
      a. Product identification, including manufacturer's name and address.
      b. Manufacturer's literature with product description, performance and test data, and reference standards.
      c. Samples, if appropriate.

d. Name and address of similar projects on which product was used, and date of installation.

2. For construction methods (if specified):
   a. Detailed description of proposed method.
   b. Drawings illustrating method.
3. Such other data as the ENGINEER may require to establish that the proposed substitution is equal to the product, manufacturer or method specified.

C. In making request for substitution, the CONTRACTOR represents that:
1. CONTRACTOR has investigated proposed substitution, and determined that it is equal to or superior in all respects to the product, manufacturer or method specified.
2. CONTRACTOR will provide the same or better guarantees or warranties for proposed substitution as for product, manufacturer or method specified.
3. CONTRACTOR waives all claims for additional costs or extension of time related to proposed substitution that subsequently may become apparent.

D. A proposed substitution will not be accepted if:
1. Acceptance will require changes in the design concept or a substantial revision of the Contract Documents.
2. It will delay completion of the Work, or the work of other contractors.
3. It is indicated or implied on a Shop Drawing and is not accompanied by a formal request for substitution from CONTRACTOR.

E. If the ENGINEER determines that a proposed substitute is not equal to that specified, CONTRACTOR shall furnish the product, manufacturer or method specified at no additional cost to OWNER.

F. Approval of a substitution will not relieve CONTRACTOR from the requirement for submission of Shop Drawings as set forth in the Contract Documents.

PART 2 PRODUCTS

(Not Used)

PART 3 EXECUTION

(Not Used)

END OF SECTION 01630

SECTION 01710
CLEANING

PART 1 GENERAL

1.1 SECTION INCLUDES

A. Producing cleaning, during progress of the Work, at completion of the Work, regulatory requirements and schedules.

1.2 REGULATORY REQUIREMENTS

A. In addition to the requirements herein, maintain the cleanliness of the Work and surrounding premises within the Work limits so as to comply with federal, state, and local fire and safety laws, ordinances, codes and regulations.

B. Comply with all federal, state and local anti-pollution laws, ordinances, codes and regulations when disposing of waste materials, debris and rubbish.

1.3 SCHEDULING OF CLEANING AND DISPOSAL OPERATIONS:

A. So that dust, wash water or other contaminants generated during such operations do not damage or mar painted or finished surfaces.

B. To prevent accumulation of dust, dirt, debris, rubbish and waste materials on or within the Work or on the premises surrounding the Work.

C. Waste Disposal:

1. Dispose of all non-hazardous waste materials, surplus materials, debris and rubbish in dumpsters. All non-hazardous waste materials shall be disposed of off-site by the CONTRACTOR in accordance with all applicable federal, state and local laws.
2. Do not burn or bury rubbish and waste materials on the plant site.
3. Do not dispose of volatile or hazardous wastes such as mineral spirits, oil, or paint thinner in storm or sanitary drains.
4. Do not discharge wastes into only streams or waterways.

1.4 CLEANING MATERIALS:

A. Use only cleaning materials recommended by manufacturer of surface to be cleaned.

B. Use each type of cleaning material on only those surfaces recommended by the cleaning material manufacturer.

C. Use only materials which will not create hazards to health or property.

1.5 SCHEDULE

A. During Construction:
   1. Keep the Work and surrounding premises within work limits free of accumulations of dirt, dust, waste materials, debris and rubbish.
   2. Keep dust generating areas wetted down.
   3. Provide suitable containers for storage of non-hazardous waste materials, debris and rubbish until time of disposal.
   4. Provide approved 55-gallon drums for storage of hazardous waste materials including but not limited to drill cuttings and personnel protection equipment.
   5. Store sealed 55-gallon drums containing hazardous waste materials on-site until an approved TSDF or designated facility will accept the sealed drums in accordance with all RECRA, USEPA, federal, state and local regulations.

B. When Project is Completed:
   1. Remove and dispose of all excess or waste materials, debris, rubbish, and temporary facilities from the site, structures and all facilities.
   2. Repair pavement, roads, sod, and all other areas affected by construction operations and restore them to original condition or to a minimum condition specified.
   3. Remove spatter, grease, stains, fingerprints, dirt, dust, labels, tags, packing materials and other foreign items or substances from interior and exterior surfaces, equipment, signs and lettering.
   4. Repair, patch and touch up chipped, scratched, dented or otherwise marred surfaces to match specified finish.
   5. Remove paint, clean and restore all equipment and material nameplates, labels and other identification markings.
   6. Clean all floors, slabs, pavements and ground surfaces.
   7. Maintain cleaning until final acceptance by ENGINEER.

PART 2 PRODUCTS

(Not Used)

PART 3 EXECUTION

(Not Used)

END OF SECTION 01710

SECTION 01720
RECORD DOCUMENTS

PART 1 GENERAL

1.1 SECTION INCLUDES

A. Preparation, maintenance and submittal of Record documentation that reflects the actual work installed and constructed.

1.2 RECORD DOCUMENTS

A. Maintenance of Documents:
   1. Maintain in CONTRACTOR'S field office in clean, dry, legible condition complete sets of the following: Drawings, Specifications, Addenda, approved Shop Drawings, Samples, photographs, Change Orders, other modifications of Contract Documents, test records, survey data, Field Orders, and all other documents pertinent to CONTRACTOR'S Work.
   2. Provide files and racks for proper storage and easy access. File in accordance with filing format of Construction Specification Institute (CSI), unless otherwise approved by ENGINEER.
   3. Make documents available at all times for inspection by ENGINEER and OWNER.
   4. Record documents shall not be used for any other purpose and shall not be removed from the CONTRACTOR'S office without ENGINEER'S approval.

B. Marking System: Provide colored pencils or felt tipped pens for marking changes, revisions, additions and deletions, to the record set of Drawings. Use following color code unless otherwise approved by the ENGINEER:
   1. Process and Mechanical: Red
   2. Architectural: Blue
   3. Structural: Purple
   4. Plumbing: Brown
   5. HVAC: Green
   6. Other Printed Notations: Black

C. Recordings:
   1. Label each document "PROJECT RECORDS" in 2-inch high printed letters.
   2. Keep record documents current.
   3. Do not permanently conceal any Work until required information has been recorded.
   4. Drawings: Legibly mark to record actual construction including:

a. Depths of various elements of foundation in relation to datum.
b. Horizontal and vertical location of underground utilities and appurtenances referenced to permanent surface improvements.
c. Location of internal utilities and appurtenances concealed in construction referenced to visible and accessible features of structure.
d. Field changes of dimensions and details.
e. Changes made by Change Order or Field Order.
f. Details not on original Drawings.

5. Specifications and Addenda: Legibly mark up each Section to record:
   a. Manufacturer, trade name, catalog number, and supplier of each product and item of equipment actually installed.
   b. Changes made by Change Order or Field Order.
   c. Other matters not originally specified.

D. Submittal:
1. Upon Substantial Completion of the Work, deliver one (1) set of record documents to the ENGINEER. Final payment will not be made until satisfactory record documents are received by ENGINEER.
2. Accompany submittal with transmittal letter containing:
   a. Date.
   b. Project title and number.
   c. CONTRACTOR'S name and address.
   d. Title and number of each record document.
   e. Certification that each document as submitted is complete and accurate.
   f. Signature of CONTRACTOR, or his authorized representative.

PART 2 PRODUCTS

(Not Used)

PART 3 EXECUTION

(Not Used)

END OF SECTION 01720

SECTION 01730
OPERATION AND MAINTENANCE DATA

PART 1 GENERAL

1.1 SECTION INCLUDES

A. Provide operation and maintenance data in the form of instructional manuals for use by the operation personnel for all equipment, systems, valves, related accessories, all instruments and control devices.

1.2 DEFINITIONS:

A. The term "operation and maintenance data" includes all product related information and documents which are required for preparation of the plant operation and maintenance manual.

B. Required operation and maintenance data include, but are not limited to, the following:

1) Complete, detailed written operating instructions for each product or piece of equipment including: equipment function; operating characteristics; limiting conditions; operating instructions for startup, normal and emergency conditions; regulation and control; and shutdown.
2) Complete, detailed written preventive maintenance instructions as defined below.
3) Recommended spare parts lists and local sources of supply for parts.
4) Written explanations of all safety considerations relating to operation and maintenance procedures.
5) Name, address and phone number of manufacturer, manufacturer's local service representative, and Subcontractor or installer.
6) Copy of all approved Shop Drawings, and copy of warranty bond and service contract as applicable.

C. The term "preventive maintenance instructions" includes all information and instructions required to keep a product or piece of equipment properly lubricated, adjusted and maintained so that the item functions economically throughout its full design life.

D. Preventive maintenance instructions include, but are not limited to, the following:
   1) A written explanation with illustrations for each preventive maintenance task.
   2) Recommended schedule for execution of preventive maintenance tasks.
   3) Lubrication charts.
   4) Table of alternative lubricants.
   5) Trouble shooting instructions.
   6) List of required maintenance tools and equipment.

1.3 SUBMITTALS:

A. Submit operations and maintenance data to the ENGINEER within 90 days after approval of Shop Drawings unless noted otherwise.

B. Number of Copies: Six (6) of each item.

C. Letter of Transmittal: Provide a letter of transmittal with each submittal and include the following in the letter:
   1. Date of submittal.
   2. CONTRACTOR'S name and address.
   3. A list of the attachments and the Specification Sections to which they relate.
   4. Reference to or explanation of related submittals already made or to be made at a future date.

D. Format Requirements:
   1. Use 8-1/2 inch by 11 inch paper of high rag content and equality. Larger drawings of illustrations are acceptable if neatly folded to the specified size in a manner which will permit easy unfolding without removal from the binder. Provide reinforced punched binder tab. Or provide fly-leaf for each product.
   2. All text must be legible typewritten or machine printed originals of high quality copies of same.
   3. Each page shall have a binding margin of approximately 1-1/2 inches and be punched for placement in a three ring looseleaf or triple post binder. Provide binders. Identify each binder with the following:
      a. Title "OPERATING AND MAINTENANCE INSTRUCTIONS".
      b. Title of Project/Project No.
      c. Contract No.
      d. Identity of general subject matter covered.
   4. Use dividers and indexed tabs between major categories of information such as operating instructions, preventive maintenance instructions, or other. When necessary, place each major category in a separate binder.

5. Provide a table of contents for each binder.
6. Identify products by their functional names in the table of contents and at least once in each chapter or Section. Thereafter, abbreviations and acronyms may be used if their meaning is explained in a table in the back of each binder. Use of model or catalog numbers or letters for identification is not acceptable.

PART 2 PRODUCTS

(Not Used)

PART 3 EXECUTION

(Not Used)

END OF SECTION 01730

SECTION 01750
SPARE PARTS AND MAINTENANCE MATERIALS

PART 1 GENERAL

1.1 SECTION INCLUDES

A. Procedures to furnish spare parts and maintenance materials as specified in the individual Sections.

1.2 SPARE PARTS

A. Parts and materials shall be furnished in manufacturer's unopened cartons, boxes, crates or other protective covering suitable for preventing corrosion or deterioration for the maximum length of storage which may be normally anticipated. They shall be clearly marked and identified.

B. During construction, store parts in accordance with manufacturers' recommendations. Protect from weather, condensation and humidity.

C. Parts and materials shall be delivered to the OWNER upon completion of the Work. CONTRACTOR shall then place them in permanent storage rooms or areas approved by the ENGINEER.

D. CONTRACTOR shall be fully responsible for loss or damage to parts and materials until they are transmitted to the OWNER.

PART 2 PRODUCTS

(Not Used)

PART 3 EXECUTION

(Not Used)

END OF SECTION 01750

SECTION 02060
DEMOLITION AND REMOVALS

PART 1 GENERAL

1.1 SECTION INCLUDES

A. Demolition, removal and disposal of existing floor slab, mechanical equipment, transformers, switchgear, panelboards, switches, circuit breakers, electrical conduits, motors, limit switches, pressure switches and instrumentation as designated to be removed on the Drawings. All electrical equipment to be retained shall be relocated or isolated by the CONTRACTOR prior to the removal of the equipment specified herein and shown.

1.2 RELATED SECTIONS:

A. Section 02220, Excavation and Backfill.

1.3 SUBMITTALS

A. Submit for approval a detailed description of methods, equipment and sequence of the demolition for the ENGINEER's review and comments.

1.4 PROTECTION

A. General:

1. Demolition and removal Work shall be performed by competent workmen experienced in the various types of demolition and removal work required and shall be carried through to completion with due regard to the safety of all OWNERS employees, workmen on the Site and the public. The Work shall be performed with as little nuisance as possible.
2. The Work shall comply with the applicable provisions and recommendation of ANSI A10.2, Safety Code for Building Construction, all governing codes and as hereinafter specified.
3. Perform investigations, explorations and probes as are necessary to ascertain any required protective measures before proceeding with the demolition.
4. Provide interior and exterior shoring, bracing and support to prevent movement, settlement, or collapse of existing structures or facilities. The OWNER assumes no responsibility for the actual condition of the structures or facilities adjacent to the Work or the structures or facilities designated for removal or modification.

5. Do not bring explosives on site. No explosives will be permitted for this Project.

B. Execution:

1. Provide, erect and maintain catch platforms, lights, barriers, weather protection, warning signs and other items as required for proper protection of the public, occupants of the building, workmen engaged in demolition operations, and adjacent construction.
2. Provide and maintain weather protection at exterior openings so as to fully protect the interior premises against damage from the elements until such openings are closed by new construction.
3. Provide and maintain temporary protection of the existing structure designated to remain where the demolition, Work and new Work is being performed, connections are being made, materials are handled or equipment moved.
4. Take all necessary precautions to prevent dust from rising by wetting demolished masonry, concrete, plaster and similar debris. Unaltered portions of the existing buildings affected by the operations under this Section shall be protected by dustproof partitions and other adequate means.
5. Provide adequate fire protection in accordance with the local Fire Department requirements.
6. Do not close or obstruct walkways, passageways, or stairways and do not store or place materials in passageways, stairs or other means of egress. CONTRACTOR shall conduct operations with minimum traffic interference.
7. CONTRACTOR shall be responsible for any damage to the existing structure or contents by reason of the insufficiency of protection provided.
8. Carry out all operations so as to avoid interference with operations and work in the existing facilities and the work under other contracts.
9. Be solely responsible for making all necessary arrangements and for performing all necessary work involving the discontinuance or interruption of all utilities or services.
10. Any equipment, piping and appurtenances removed without proper authorization, shall immediately be replaced to the satisfaction of ENGINEER a no cost to OWNER.

C. Notification:

1. At least 48 hours prior to commencement of all demolition or removal Work, the CONTRACTOR shall notify the ENGINEER in writing of this proposed schedule. OWNER shall inspect the existing equipment and review with CONTRACTOR those items which are to remain the property of OWNER. No removals shall be started without the permission of ENGINEER.

PART 2 - PRODUCTS

(Not Used)

PART 3 - EXECUTION

3.1 GENERAL

A. The Work required shall be done with care, and shall include all required shoring, bracing, etc. The CONTRACTOR shall be responsible for any damage which may be caused by the demolition and removal Work to any part or parts of the existing structures or items designated for reuse or to remain. The CONTRACTOR shall perform patching, restoration and new Work in accordance with applicable technical sections of the Specification and in accordance with the details shown on the Drawings.

B. There is no guarantee by the OWNER that the number of fixtures, amount of equipment or any other material of value existing in the buildings and structures to be demolished at the bidding time will be present in the structures when they are demolished. The CONTRACTOR shall have no claim against the OWNER because of the absence of such fixtures and materials.

C. Surfaces of walls, floors, ceilings, or other areas which are exposed by any of the removals specified herein, and which will remain as architecturally finished surfaces, which have holes, scars, chipped or other damaged surfaces revealed by the removal shall be repaired by CONTRACTOR with the same or matching materials as the existing surface or as may be otherwise approved by ENGINEER.

D. Pollution Controls: Use water sprinkling, temporary enclosures, and other suitable methods to limit the amount of dust and dirt rising and scattering in the air to the lowest practical level. Comply with governing regulations pertaining to environmental protection.
   1. Do not use water when it may create hazardous or objectionable conditions such as ice, flooding, and pollution.
   2. Clean adjacent structures, facilities, and improvements of dust, dirt, and debris caused by demolition operations. Return adjacent areas to conditions existing prior to the start of the Work.

E. All supports, pedestals and anchors shall be removed with the equipment and piping unless otherwise specified or required. Concrete bases, anchor bolts and other supports shall be removed to approximately one inch below the surrounding finished area and the recesses shall be patched to match the adjacent areas. Superstructure wall and roof openings shall be closed, and damaged surfaces shall be patched to match the adjacent areas, as specified under applicable sections of the Specifications, as shown, or as directed by ENGINEER. Wall sleeves and

castings shall be plugged or blanked off, all openings in concrete shall be closed in a manner meeting the requirements of the appropriate sections of the Specifications, as shown or as directed and approved by ENGINEER.

F. Where equipment is shown or specified to be removed and relocated, the CONTRACTOR shall not proceed with removal of this equipment without specific prior approval of the ENGINEER. Such items shall be removed with care, under the supervision of the trade responsible for reinstallation and protected and stored until required. Material or items damaged during removal shall be replaced with similar new material or items. Any equipment that is removed without proper authorization and is required for plant operation shall be replaced at no cost to the OWNER.

G. Wherever piping is to be removed for disposition, the piping shall be drained by CONTRACTOR and adjacent pipe and headers that are to remain in service shall be blanked off or plugged and then anchored in an approved manner.

H. Where alterations occur, or new and old Work join, the CONTRACTOR shall cut, remove , patch, repair or refinish the adjacent surfaces to the extent required by the construction conditions, so as to leave the altered Work in as good a condition as existed prior to the start of the Work. The materials and workmanship employed in the alternations, unless otherwise shown on the Drawings or specified, shall comply with that of the various respective trades which normally perform the particular items of work.

I. Confine the cutting of the existing Building Floor to the limits of the new Work.

J. Remove all temporary work, such as enclosures, signs, guards, and the like when such temporary work is no longer required or when directed at the completion of the Work.

3.2 STRUCTURAL REMOVALS

A. Remove concrete and structures to the lines and grades shown unless otherwise directed by ENGINEER. Where no limits are shown, the limits shall be 4 inches outside the item to be installed. The removal of masonry beyond these limits shall be at CONTRACTOR's expense and these excess removals shall be reconstructed to the satisfaction of ENGINEER with no additional compensation to the CONTRACTOR.

B. Determine the thickness of existing concrete to be removed and the extent to which it is reinforced. No additional compensation will be made because of variations from the thickness shown or for variations in the amount of reinforcement.

C. All concrete, brick, tile, concrete block, roofing materials, reinforcement, structural or miscellaneous metals, plaster, wire mesh and other items contained in or upon the structure shall be removed and taken from the site, unless otherwise approved by the ENGINEER. Demolished items shall not be used in backfill.

D. After removal of parts or all of masonry walls, slabs and like work which tie into new Work or existing work, the point of junction shall be neatly repaired so as to leave only finished edges and finished surfaces exposed.

3.3 PAVEMENT, CURB AND SIDEWALK REMOVALS

A. Remove existing pavement, including base and surface courses, stabilized sub-bases, curbs, and gutters as required to construct new facilities or as shown. Before removing, saw a straight joint at least 1-1/2-inches deep between sidewalk and pavement designated for removal and that left in place. Curbs and gutters shall be removed to the nearest construction joint beyond the end of demolition symbol shown on the Drawings.

B. Provide for satisfactory transition between replaced pavement and sidewalks and the portions remaining in place.

3.4 EQUIPMENT REMOVALS

A. Equipment removals shall consist of dismantling and removing of existing piping, pumps, motors, equipment, and other appurtenances as specified, shown, or required for the completion of the Work. It shall include cutting, capping, draining, and plugging as required. The cutting of existing piping for the purpose of making connections will be included under Division 15.

B. When underground piping is to be altered or removed, the remaining piping shall be properly capped. Abandoned underground piping may be left in place unless it interferes with new Work or is shown or specified to be removed.

C. Water and vent piping shall be removed to points shown or required. Pipe shall be plugged with cleanouts and plugs. Where piping or ducts pass through existing roof the hole in the roof shall be properly patched and made the watertight.

D. Any demolition or changes to potable water piping and other plumbing and heating system work shall be made in conformance with all applicable codes. Portions of the potable water system that may have been altered or opened shall be pressure tested and disinfected in accordance with Division 15 and local codes. Other plumbing piping and heating piping shall be pressure tested only.

E. Provide all caps, plugs, blind flanges, shut-off valves and other work and materials required to remove from service existing piping and necessary to keep existing piping in service where shown or required.

3.5 ELECTRICAL REMOVALS

A. Electrical removals shall consist of the removal of existing transformers, distribution switchboards, control panels, motors, conduits and wires, panelboards, lighting fixtures, and miscellaneous electrical equipment all as required to perform the Work.

B. All existing electrical equipment and fixtures to be removed shall be removed by the CONTRACTOR with such care as may be required to prevent unnecessary damage, to keep existing systems in operation and to keep the integrity of the grounding systems.

1. The Electrical CONTRACTOR shall, in conjunction with OWNER, de-energize panelboards, lighting switches, pressure switches, instrumentation, wiring and similar power equipment prior to removal.

C. Where shown or otherwise required, wiring shall be removed. The CONTRACTOR shall verify the function of all wiring before disconnecting and removing it. Ducts which are not to be reused shall be plugged and made watertight. All openings in buildings for entrance of abandoned conduit or direct-burial cable shall be patched and made watertight.

D. Panelboards shall be removed and disposed of off the site. All cutting and patching necessary for the removal and replacement of panelboards shall be performed.

E. Lighting fixtures shall be relocated as shown or required to install the new Work or perform the demolition work.

F. Switches, receptacles, starters and other miscellaneous electrical equipment, shall be removed and disposed of off the site. Care shall be taken in removing all equipment so as to minimize damage to architectural and structural members. Any damage incurred shall be repaired.

3.6 MISCELLANEOUS REMOVALS

A. CONTRACTOR shall remove miscellaneous concrete walls, slabs, pipe supports, equipment pads, and curbs where shown on the Drawings or where necessary for the construction of new structures or modification of existing structures. Anchor bolts shall be cut back one inch below the concrete surface and the hole patched.

3.7 MODIFICATIONS AND CLOSURES

A. Modifications shall conform with all applicable Specifications, the Drawings, and the directions and approvals of ENGINEER.

B. Where alterations require cutting or drilling into existing floors, walls, and roofs the holes shall be repaired in an approved manner. Repair such openings with the same or matching materials as the existing floor, wall, or roof or as otherwise approved by ENGINEER. All repairs shall be smoothly finished unless otherwise approved by ENGINEER.

   1. CONTRACTOR shall confine cutting of existing roof areas designated to remain to the limits required for the proper installation of the new Work. CONTRACTOR shall cut and remove insulation, etc. and provide temporary weathertight protection as required until new roofing, insulation and flashings are installed.

C. Openings in existing concrete slabs, ceilings, roofs, masonry walls, floors and partitions which are not to be used in the new Work shall be closed and sealed as shown or otherwise directed by ENGINEER.

D. Where parts of exiting structures are to remain in service, demolish the portions to be removed, repair damage, and leave the structure in proper condition for the intended use. Remove concrete and masonry to the lines designated by drilling, chipping, and other suitable methods. Leave the resulting surfaces true and even, with sharp straight corners that will result in neat joints with new construction or be satisfactory for the purpose intended. Where existing reinforcing rods are to extend into new construction, remove the concrete so that the reinforcing is clean undamaged. Cut off other reinforcing flush with the surface.

E. All new Work shall be keyed into the existing in an acceptable manner. New reinforcing steel shall be welded to the existing reinforcing. Welding shall conform to AWS D12.1, Reinforcing Steel Welding Code. In general, the same or matching materials as the existing adjacent surface shall be used. The finished closure shall be a smooth, tight, sealed, permanent closure with all exposed surfaces smooth finished and acceptable to ENGINEER.

3.8. TITLE TO EQUIPMENT AND MATERIALS

A. CONTRACTOR shall have no right or title to any of the equipment, materials or other items removed from the existing buildings or structures unless otherwise directed by the ENGINEER. The CONTRACTOR shall not sell or assign or attempt to sell or assign any interest in the said equipment, materials or other items until the said equipment, materials or other items have been removed.

B. CONTRACTOR shall have no claim against OWNER because of the absence of such fixtures and materials.

3.9 CONDITION OF BUILDINGS, STRUCTURES AND EQUIPMENT

A. The OWNER does not assume responsibility for the actual condition of buildings, structures and equipment to be demolished and removed.

B. Conditions existing at the time of inspection for bidding purposes will be maintained by OWNER so far as practicable.

C. The information regarding the existing structures and equipment shown on the Drawings is based on visual inspection and a walk-through survey only. Neither the ENGINEER nor OWNER will be responsible for interpretations or conclusions drawn therefrom by CONTRACTOR.

3.10 MAINTENANCE AND CLEAN UP

A. Maintain the buildings, structures and public properties free from accumulations of waste, debris and rubbish, caused by the demolition and removal operations.

B. Provide on-site dump containers for collection of waste materials, debris and rubbish, and he shall wet down dry materials to lay down and prevent blowing dust.

C. At reasonable intervals during the progress of the demolition and removal Work (or as directed by the ENGINEER) clean the Site and properties, and dispose of waste materials, debris and rubbish.

END OF SECTION 02060

SECTION 02220
EXCAVATION AND BACKFILL

PART 1 GENERAL

1.1 SECTION INCLUDES

A. Excavating, backfilling and disposing of earth materials for the purpose of constructing structures, conduits, pipelines and other facilities. Preparation of subgrade for footings, foundations, and slabs and temporary means needed to prevent discharge of sediment to water courses.

1.2 QUALITY ASSURANCE

A. Source Quality Control: CONTRACTOR shall be responsible for the payment of all testing required to determine the acceptability of proposed fill and backfill material.

B. Permits and Regulations:
   1. All required building and construction permits.
   2. Perform excavation work in compliance with applicable requirements of governing authorities having jurisdiction.

C. Reference Standards: Comply with applicable provisions and recommendations of the following except as otherwise shown or specified.
   1. ASTM A 36, Structural Steel.
   2. ASTM A 328, Steel Sheet Piling.
   3. ASTM D 422, Particle-Size Analysis of Soils.
   4. ASTM D 423, Liquid Limit of Soils.
   5. ASTM D 424, Plastic Limit and Plasticity Index of Soils.
   6. ASTM D 1556, Density of Soil in Place by the Sand-Cone Method.
   7. ASTM D 2487, Classification of Soils for Engineering Purposes.
   8. AISC Specifications for the Design, Fabrication, and Erection of Structural Steel for Buildings.

1.3 SUBMITTALS

A. Submit for review and comment the following items:
   1. Sheeting and bracing.
   2. Protection methods anticipated.
   3. Underpinning.

B. The Drawings shall be prepared by a professional engineer registered in the State of Rhode Island and recognized as expert in the specialty involved. The Drawings shall be submitted to the ENGINEER for purposes of establishing that the terms of the Specifications are complied with only. Submit calculations and all other pertinent information. Drawing submissions will not be checked and will not imply approval by the CONTRACTOR of the work involved.

C. CONTRACTOR shall be wholly responsible for designing, installing and operating whatever system is necessary to accomplish satisfactory sheeting, bracing, protection, underpinning and dewatering.

1.4 JOB CONDITIONS

A. Perform two (2) test borings in the area of the Equalization Tanks Containment Area to verify the soil bearing capacity.

B. Existing Structures and Utilities:
   1. Shown on the Drawings are certain surface and underground structures adjacent to the Work. This information has been obtained from existing records. It is not guaranteed to be correct or complete and is shown for the convenience of the CONTRACTOR. Explore ahead of the required excavation to determine the exact location of all structures. They shall be supported and protected from injury by the CONTRACTOR. If they are broken or otherwise damaged, they shall be restored immediately by the CONTRACTOR at his expense.
   2. Locate existing underground utilities in the areas of Work. If utilities are to remain in place, provide adequate means of protection during earthwork operations.
      a. Should uncharted or incorrectly charted piping or other utilities be encountered during excavation, consult the OWNER and ENGINEER immediately for directions as to procedures to be taken. Cooperate with OWNER and utility companies in keeping respective services and facilities in operation. Repair damaged utilities to satisfaction of utility owner.
   3. Do not interrupt existing utilities serving facilities occupied and used by others, except when permitted in writing by OWNER and then only after acceptable temporary utility services have been provided.

C. Use of Explosives: Not permitted on the job site.

D. Protection of Persons and Property:
   1. Barricade open excavations occurring as part of this Work and post with warning lights.

2. Operate warning lights during hours from dusk to dawn each day and as otherwise required.
3. Protect structures, utilities, pavements, and other facilities from damage caused by settlement, lateral movement, undermining, washout and other hazards created by earthwork operations.

E. Dust Control: Conduct all operations and maintain the area of activities, including sweeping and sprinkling of roadways, so as to minimize creation and dispersion of dust.

PART 2 PRODUCTS

2.1 SOIL MATERIALS

A. Select Fill and Backfill Materials:
1. Place below footings, foundations, slabs and against structure walls.
2. Fill shall be well-graded, granular material or bank run gravel, free from organic matter. All fill shall be from a clean, virgin source, and not subject to previous industrial activity. Not more than 50 percent by weight shall pass through a No. 40 sieve; not more than 10 percent by weight shall pass through a No. 200 sieve; and 100 percent shall pass a 6-inch square sieve.

PART 3 EXECUTION

3.1 INSPECTION

A. Examine the areas and conditions under which excavating are to be performed and notify the ENGINEER of conditions he may find that are detrimental to the proper and timely completion of the Work. Do not proceed with the Work until unsatisfactory conditions have been corrected in an acceptable manner.

3.2 TEST PITS

A. Where ordered by the ENGINEER, excavate and backfill, in advance of construction, test pits to determine conditions or location of existing facilities.
B. Test pits may be made by the CONTRACTOR for his own use at no additional cost to the OWNER.

3.3 EXCAVATION

A. General:
   1. Perform all excavation required to complete the Work as shown and specified.
   2. Excavated Materials: Earth, sand, clay, gravel, hardpan, boulders not requiring drilling or jackhammering to remove, decomposed rock, sediment, rubbish and all other materials within the excavation limits, except rock.

B. Structures and Pipelines:
   1. Excavations: Open excavations, shored and braced where necessary to prevent possible injury to workmen and to new and existing structures or pipelines.
   2. Sheeting and Bracing: Install in accordance with drawings submitted under Article 1.3 above.

C. Footings:
   1. Consider the elevation of the bottom of footings shown as approximate only and the ENGINEER may order such changes in dimensions and elevations as may be required to secure a satisfactory footing.
   2. Hand trim all structure excavations to permit the placing of full widths, and lengths of footings on horizontal beds. Rounded and undercut edges will not be permitted.
   3. When excavations are made below the required grades, without the written order of the ENGINEER, backfill with well graded granular material to be compacted to the specified density or concrete as directed by the ENGINEER at expense of CONTRACTOR.

D. Size of Excavations: Extend excavation sufficiently on each side of structures, footings, etc., to permit setting of forms, installation of sheeting or the safe sloping of banks.

E. Subgrades:
   1. General Requirements: The compaction of backfill shall be maintained at +2 percent from optimum moisture content. The compacted fill shall remain firm and in tact under all construction operations. Mud, muck and other soft or unsuitable materials shall be removed.
   2. Subgrade Requirements for Pipeline Trench Bottoms and Floor Slabs: Compact to at least 90% of the maximum modified Proctor Method dry unit weight.
   3. Subgrade Requirements for Footing Foundations: Compact to at least 95 percent of the maximum modified Proctor dry unit weight.
   4. Soft Subgrades: For subgrades which are otherwise solid, but which become soft or mucky on top due to construction operations, follow these procedures:
      a. Remove the soft and mucky material and replace with suitable backfill

and recompacted to the specified density. The soft surface can also be stabilized with crushed stone, crushed slag or lime.

b. Overlay with geotextile fabric prior to placement of crushed stone or gravel.

5. Finished Elevation of Stabilized Subgrades: Do not place above subgrade elevations shown.

F. Stability of Excavations:

1. Sides of Excavations: Slope to comply with codes and ordinances of agencies having jurisdiction.
2. Shoring and Bracing: Where sloping is not possible either because of space restrictions or stability of material excavated.
3. Safety: Maintain sides and slopes of excavations in a safe condition until completion of backfilling.
4. Caving: If caving occurs outside the excavation area, backfill the resulting hole in accordance with the requirements of this section after removing the loose material.

G. Material Storage:

1. Stockpile excavated materials in an approved area, until required for backfill or fill. Do not place clean soil in the protection area.
2. Place, grade and shape stockpiles for proper drainage.
3. Locate and retain soil materials away from edge of excavations.
4. Excess soil and waste materials shall be stored on-site and tested to determine heavy metal concentrations.

H. Unsuitable Material:

1. Where the existing material beneath the bedding material is considered unsuitable by the ENGINEER, remove and replace it with select backfill.
2. The selected backfill shall be compacted in accordance with the specified density criteria in subsection 3.7.

3.4 UNAUTHORIZED EXCAVATION

A. All excavation outside the lines and grades shown.

B. All unauthorized excavation together with the removal, testing, required treatment and disposal of the associated materials is at the CONTRACTOR'S expense.

C. Fill and compact the unauthorized excavation with select backfill and at CONTRACTOR'S expense.

3.5 DRAINAGE AND DEWATERING

A. General:
   1. Prevent surface and subsurface water from ponding in the excavations and from flooding adjacent areas.
   2. Remove water from excavation as fast as it collects.
   3. Maintain the ground water level at least 3 feet below the bottom of the excavation to provide a stable surface for construction operations, a stable subgrade for the permanent work, and to prevent damage to the Work during all stages of construction.
   4. Provide and maintain pumps, sumps, suction and discharge lines and other dewatering system components necessary to convey water away from excavations.
   5. Obtain ENGINEER's approval before shutting down dewatering system for any reason.

B. Standby Requirements for Dewatering: Provide standby equipment to ensure continuity of dewatering operations.

C. Disposal of Water Removed by Dewatering System:
   1. Dispose of all water removed from the excavation to a storage tank prior to discharge to the local sanitary sewer.
   2. Dispose of water in such a manner as to cause no inconvenience to the OWNER, ENGINEER, or others involved in work about the site.
   3. Convey water from the construction site in a closed conduit. Do not use trench excavations as temporary drainage ditches.

3.6 SHEETING, SHORING AND BRACING

A. General:
   1. Sheet, shore and brace all open excavations where necessary to prevent injury to workmen, structures, or pipe lines.
   2. Observe all municipal, county, state and federal ordinances, codes, regulations and laws.
   3. Used material shall be in good condition, not damaged or excessively pitted. All steel or wood sheeting designated to remain in place shall be new. New or used sheeting may be used for temporary work.
   4. Timber Used for Breast Boards (lagging): New or used, meeting the requirements for Douglas Fir Dense Construction grade or Southern Pine No. 2 Dense S3.
   5. Design in accordance with the provisions of the "Specifications for the Design, Fabrication and Erection of Structural Steel for Buildings(m), of the AISC all

steel work for sheeting, shoring, bracing, cofferdams, etc. except that field welding will be permitted.

6. Steel Sheet Piling: Manufactured from steel conforming to ASTM A 328. Steel for soldier piles, wales and braces shall be new or used and shall conform to ASTM A 36. Furnish mill test reports on new piling but not used ones.
7. Maintain shoring and bracing in excavations regardless of time period excavations will be open. Carry down shoring and bracing as excavation progresses.
8. Unless otherwise shown, specified, or ordered, remove all materials used for temporary construction when work is completed. Make this removal in a manner not injurious to the structure or its appearance or to adjacent Work.
9. **Safe and satisfactory sheeting shall be the entire responsibility of the CONTRACTOR.**

B. Removal of Sheeting and Bracing:
1. Remove sheeting and bracing from excavation unless otherwise directed in writing by the ENGINEER.
2. Conduct removal so as to not cause injury to the Work.
3. Removal shall be equal on both sides of excavation to ensure no unequal loads on pipe or structure.
4. Defer removal of sheeting and bracing, where removal may cause soil to come into contact with concrete until the following conditions are satisfied:
   a. Concrete has cured a minimum of 7 days.
   b. Wall and floor framing up to and including grade level floors are in place.

3.7 GENERAL BACKFILL

A. Furnish, place and compact all general backfill and fill required to provide the finished grades shown and described herein.

B. Restrictions: Backfill excavations as promptly as Work permits, but not until completion of the following:
1. Reviewed by ENGINEER of construction below finish grade.
2. Inspection, testing, approval, and recording of locations of underground utilities.
3. Removal of concrete formwork.
4. Removal of shoring and bracing, and backfilling of voids with satisfactory materials. Cut off temporary sheet piling driven below bottom of structures and remove in manner to prevent settlement of the structure or utilities, or leave in place if required.
5. Removal of trash and debris.

6. Permanent or temporary horizontal bracing is in place on horizontally supported walls.
7. Placement of settlement plates.

C. Placement:
1. Keep excavation dry during backfilling operations.
2. Bring up backfill evenly on all sides around structures.
3. Compact fill to the degree and within the moisture content specified in Paragraph 3.7.I of this Section.

D. Backfill Against Concrete:
1. Do not differ the levels of backfill against concrete walls by more than 2 feet on either side of walls unless walls are adequately braced.

E. Thickness of Lifts: Unless otherwise specified or required, place fill in horizontal loose lifts not exceeding 9 inches in thickness and mix and spread in a manner assuring uniform lift thickness after placing.

F. Moisture:
1. Control the water content of fill material during placement within the range necessary to obtain the compaction specified.
2. In general, maintain the moisture content of the fill within 2 percent of the optimum moisture content for compaction as determined by laboratory tests.
3. Perform all necessary work to adjust the water content of the material to within the range necessary to permit the compaction specified.
4. Do not place fill material when free water is standing on the surface of the area where the fill is to be placed.
5. No compaction of fill will be permitted with free water on any portion of the fill to be compacted.

G. Unacceptable Material:
1. Do not place or compact fill in a frozen condition or on top of frozen material.
2. Remove fill containing organic materials or other unacceptable material and replace with approved fill material.

H. Equipment:
1. Compact fill with equipment suitable for the type of material placed and which is capable of providing the densities required.
2. Select compaction equipment and submit it and proposed procedure to the ENGINEER for approval.

I. Compaction Criteria:
   1. General backfill shall be compacted to at least 90 percent of the maximum modified Proctor dry unit weight as achieved by ASTM D 1557.
   2. The backfill shall be compacted with a moisture content within +2 percent of the optimum moisture content.

J. Tests:
   1. Test the effectiveness of the equipment at the commencement of compacted fill Work by construction of a small section of fill within the area where fill is to be placed.
   2. If tests on this section of fill show that the specified compaction is not obtained, increase the amount of coverages, decrease the lift thickness or obtain a different type of compactor.
   3. No additional cost to the OWNER shall be incurred.

K. Backfill Around Structures:
   1. Follow the specified procedures for backfill around structures except that within 2 feet of foundations and underground structures, use light compaction equipment with the gross weight of the equipment not exceeding 7,000 pounds.
   2. Provide equipment that is capable of the required compaction within restricted areas next to structures and around piping.

L. Inadequate Compaction:
   1. If the specified densities are not obtained because of improper control of placement or compaction procedures, or because of inadequate or improperly functioning compaction equipment, perform whatever work is required to provide the required densities.
   2. This work includes complete removal of unacceptable fill areas and replacement and recompaction until acceptable fill is provided.

M. Settlement:
   1. Repair any settlement that occurs, at CONTRACTOR'S expense.

   2. Make all repairs and replacements necessary within 30 days after notice from the ENGINEER or OWNER.

3.8 SELECT BACKFILL

A. Furnish, place and compact all select backfill and fill required as shown and described herein.

B. Restrictions:
   1. Make subgrade surface level, dry, firm and subject to CONTRACTOR'S approval.
   2. Do not place fill if any water is on the surface of area to receive fill.
   3. Do not place or compact fill in a frozen condition or on top of frozen material.

C. Thickness of Lifts:
   1. Place fill in horizontal loose lifts of 9 inches maximum thickness.
   2. Mix and spread in a manner to assure uniform lift thickness after placing.
   3. Compact each layer of fill before placement of the next lift.

D. Unacceptable Material:
   1. Do not place fill containing lumps or pockets of soil. Fill material containing rubble, debris, wood or other organic matter is not acceptable.
   2. Remove and dispose of fill containing unacceptable material.

E. Moisture:
   1. The water content of the fill being compacted shall be within the range of plus or minus 2 percentage points from the optimum moisture content of the material.
   2. Wet the fill materials during placement to achieve water contents needed for effective compaction.

F. Equipment:
   1. Perform compaction of fill with equipment suitable for the type of fill material being placed.
   2. Select equipment which is capable of providing the densities required and submit the equipment to the ENGINEER for review.
   3. Vibratory rollers or vibratory plate compactors are suitable for compaction of select fill.

G. Coverage:
   1. Compact each layer of fill material by at least two complete coverages of all portions of the surface of each lift using suitable compaction equipment.
   2. One coverage is defined as the condition reached when all portions of the fill lift have been subjected to the direct contact of the compacting surface of the compactor.

H. Compaction:
   1. The minimum density to be obtained in compacting the selected backfill or fill below the footing foundation shall be 95 percent of the maximum modified Proctor dry unit weight obtained in the laboratory in accordance with ASTM

D 1557, Method C.

2. If the field and laboratory tests indicate unsatisfactory compaction, provide the additional compaction necessary to obtain the specified degree of compaction.

I. Disturbed Materials:

1. Provide, place and compact select fill necessary to replace subgrade materials disturbed and softened as a result of the CONTRACTOR'S operations or to backfill unauthorized excavation.
2. Furnish additional fill at the CONTRACTOR'S expense.

3.9 GRADING

A. General:

1. Uniformly grade areas within limits of grading under this Section, including adjacent transition areas.
2. Smooth subgrade surfaces within specified tolerances.
3. Compact with uniform levels or slopes between points where elevations are shown, or between such points and existing grades.

3.10 DISPOSAL OF EXCAVATED MATERIALS

A. Following testing, all excess material removed from the excavations will be disposed of off the site in accordance with EPA, state and local regulations.

END OF SECTION 02220

SECTION 02545
PAVEMENT

PART 1 GENERAL

1.1 SECTION INCLUDES

A. Furnish and install temporary and permanent hot-mix bituminous paving.

1.2 PAVEMENT

A. The Work includes permanent and temporary pavements comprised of one or more of the following:
   a. Aggregate base course.
   b. Tack coats.
   c. Binder course.
   d. Top course.
   e. Pavement marking.

B. Temporary pavement shall be placed as necessary to maintain continuous access to the parking lot and other locations on-site.

C. In order to prevent damage to the permanent pavement by CONTRACTOR's operations, all permanent pavement materials, including the aggregate base course, shall not be installed until approved in writing by ENGINEER. The finished course of paving shall not be installed until all structures, equipment, piping and outside facilities are substantially completed and at a time approved by ENGINEER.

1.3 RELATED SECTIONS

A. Section 02060, Demolition and Removals.
B. Section 02220, Excavation and Backfill.

1.4 QUALITY ASSURANCE

A. Laboratory approval of the sources of supply of the fine aggregates, coarse aggregates, mineral filler, bituminous materials, liquefiers and any other materials used in the mix shall be obtained and submitted by CONTRACTOR. No delivery or mixed materials shall be made from any bituminous mixing plant until the source of supply are approved.

1.5 SUBMITTALS

A. Submit for approval job mix formula proposed, giving complete data on materials, including source, location, percentages, temperatures, date of last testing, and all other pertinent data.

1.6 JOB CONDITIONS

A. Weather Limitations:
   1. Permanent paving materials, including the aggregate base course, shall be placed only when the air temperature is 40 degrees Fahrenheit and rising or warmer and the surface on which the paving is to be laid is 40 degrees Fahrenheit or higher. All temperatures are to be measured in the shade.
   2. Bituminous pavement for temporary uses, that are not and will not become part of a permanent pavement, will not be subject to the above regulations in regard to weather limitations. No pavement, however, shall be laid on a frozen subgrade.

B. Grade Control: Establish and maintain the required lines and grades, including crown and cross-slope for each course during construction operations.

PART 2 PRODUCTS

2.1 PAVEMENT THICKNESS

A. In-place compacted material thickness shall not be less than 6 inches.

2.2 MATERIALS

A. Materials shall conform to the following:
   1. Subgrade shall be virgin material or select fill conforming to the requirements of Section 02220, Excavation and Backfill.
   2. Base Courses:
      a. Aggregate for permanent pavement base course shall consist of crushed stone conforming to the following gradation:

Screen Size	% Passing
1-1/2-in	100
1-in	100
1/2-in	65-85
3/8-in	55-75
#4	40-55

#8	30-45
#16	22-36
#30	16-27
#50	12-19
#100	7-13
#200	3-8

3. Pavement:
   a. Permanent: Provide a two course wearing surface for permanent pavement, consisting of a binder course and a top course.
   b. Temporary: Provide a one course wearing surface for temporary pavement, consisting of a top course as specified above.
4. Tack Coat: Tack coat shall be an asphalt emulsion.

PART 3 EXECUTION

3.1 GENERAL

A. Installation of all pavement materials and pavement markings shall be performed by experienced personnel.

B. Preparing the mixtures, paving equipment, placing the mixes, and compacting the mixes shall be in accordance with below.
   1. Preparing the mixtures includes the plant equipment, stockpiling, heating, aggregate processing, mixing of aggregate and bituminous material, and transportation to job site.
   2. Paving equipment includes bituminous pavers, rolling equipment and hand tools.
   3. Placing the mixes includes paver placing, hand placing, spreading, tamping and jointing.
   4. Compacting the mixes includes breakdown rolling, second rolling and finish rolling.

C. Regardless of the type of temporary or permanent restoration involved, CONTRACTOR shall insure that all castings are set flush with the road surface. CONTRACTOR is advised that there shall be no placement of bituminous concrete top course until:
   1. Manholes have been constructed to their final elevation.
   2. Defective areas of the binder course have been repaired.

D. Provide final surfaces of uniform texture, conforming to required grades and cross sections.

3.2 SUBGRADE PREPARATION

A. Permanent Pavement: Preparation of the permanent pavement subgrade including compaction shall be completed for the full width of the surface.

1. Fine grade earth subgrade and compact with self-powered rollers of sufficient size to provide a firm, unyielding surface to receive the aggregate base course. Remove and replace all unsuitable subgrade material as directed by ENGINEER.
2. Where the subgrade is constructed by excavation of the existing grade, the top 6-inches of the subgrade shall be compacted to at least 95 percent of maximum density at optimum moisture content as determined in ASTM D 698.
3. When the subgrade is constructed on fill:
   a. Existing grade shall be made smooth and compacted per Section 3.2.A.2.
   b. Subgrade shall be brought to the appropriate lines and grades utilizing select backfill placed in accordance with the applicable requirements of Section 2D1, Excavation and Backfill.
4. Existing grades prior to placement of subbase or backfill shall be established such that when materials for construction are placed no rutting or displacement will occur.

B. Temporary Pavement: Subgrade shall be compacted with a ten (10) ton roller or other approved method.

C. No materials, temporary or permanent, shall be placed on subgrades which are muddy or have water thereon.

3.3 PERMANENT PAVEMENT BASE COURSE INSTALLATION

A. Construct base course to thickness specified in equal layers not more than three inches (compacted) thick. If subgrade material is worked into the base material during compaction or finishing operations, remove the aggregate over this area and replace with new aggregate.

B. Compact each layer with a power driven roller weighing not less than ten tons in an approved manner with the aid of water. Before mixing and spreading the base material, the moisture content shall be both sufficient to prevent segregation into pockets of fine and coarse material, and to permit satisfactory compaction. Add water as required.

C. After compaction, the top surface of this course shall not extend above, nor more than 1/2-inch below true grade and surface at any location. Depressions shall be filled with additional aggregate material and the surface rerolled. Base course shall

be maintained by CONTRACTOR within the 1/2-inch tolerance until the pavement course is installed.

3.4 PAVEMENT INSTALLATION

A. Contact surfaces of all curbings, gutters, castings and adjacent pavement edges shall be painted with a layer of tack coat before placing or repairing the pavement course.

B. Bituminous concrete shall be constructed to thicknesses specified and rolled with a twelve (12) ton self powered two axle or three axle tandem or three wheel roller to a density of 94 percent of maximum.

C. Pavement shall be uniform in appearance, free of bumps and hollows, worked to drain, and free of bleeding.

D. Trim the existing pavement with pneumatic chisels of all loose edges and broom and tack coat all edges prior to placing the transition pavement.

E. In placing and compacting abutting courses of bituminous concrete pavements, joint heating devices shall be used on all joints (transverse, longitudinal and existing).

F. Bituminous pavement shall match in thickness the existing pavement and shall butt with the pavement in a smooth, even transition.

G. Test bituminous pavement for conformity with the specified crown and grade immediately after initial compression. Correct variations by the removal or additional of materials and by continuous rolling.

H. The finished surface shall not vary more than 1/4-inch when tested with a 16-ft straightedge applied parallel with, or at right angles to, the centerline.

I. After final rolling, again test the smoothness of the course. Correct humps or depressions exceeding the specified tolerances or that retain water on the surface by removing the defective work and replacing with new material.

3.6 TEMPORARY PAVEMENT OVER TRENCHES

A. Bituminous concrete plant mix to be utilized for temporary pavement over trenches, as required, shall conform to the requirements for the top course Type La plant mix.

B. Trenches for utility work within existing paved areas-shall receive temporary pavement. The ENGINEER shall determine the limits of temporary pavement to be installed over these trenches.

C. After the trench has been properly backfilled, excavation shall be made over the trench area and the sub-grade compacted by rolling with a ten ton roller or other approved methods, so as to permit the placing of a one and one-half inch (1-1/2") compacted thickness of bituminous concrete. The sub-grade shall not be in a muddy or frozen condition and shall be smooth and parallel to the desired surface of the finished pavement. Compaction of this 1-1/2" minimum thickness bituminous concrete shall be as specified herein.

3.7 PATCHING

A. Remove and replace all defective areas in temporary and permanent pavements. Cut-out such areas and fill with fresh Type La bituminous concrete top course as specified. Compact to the required density.

3.8 CLEANING AND PROTECTION

A. After completion of paving operations, clean surfaces of excess or spilled bituminous materials and all foreign matter.

B. Protect newly finished pavement until it has become properly hardened by cooling.

C. During the paving operation cover openings of drainage structures in the area of paving.

3.9 MAINTENANCE AND ACCEPTANCE

A. Maintain all paved surfaces until the roads and parking areas have been accepted. Paved areas will not be accepted until after CONTRACTOR has completed all phases of the work, including all necessary transportation, hauling and severe usage of the paved areas. ENGINEER shall be the sole judge in this matter.

END OF SECTION 02545

SECTION 02671A

SOIL VAPOR EXTRACTION WELL MODIFICATIONS

PART 1 GENERAL

1.1 SECTION INCLUDES

A. Modifying wells VE-1R, VE-2R, VE-3R, VE-9, VE-10, and VE-11 for soil vapor and groundwater extraction.

1.2 RELATED SECTIONS

A. Section 11210 - SVE System Groundwater Pumps

B. Section 11340 - SVE Equipment

C. Section 15060 - SVE Piping and Appurtenances

D. Section 15260 - Piping Insulation

E. Section 15980 - Functional Description and Instrumentation and Controls

1.3 REFERENCES

A. Refer to 1.2 Related Sections.

1.4 SYSTEM DESCRIPTION

A. General: Six wells (VE-1R, VE-2R, VE-3, VE-9, VE-10, and VE-11 (formerly MW-14S) will be modified. The wells are screened through the unsaturated zone into the saturated zone and the modifications to these wells will enable them to extract both contaminated groundwater and soil gas. None Aqueous Phase Liquid (NAPL) is not anticipated to be encountered.

B. The wells will be fitted with a TEE WYE reducing fitting, as specified by the Contract Drawings, to facilitate the connection of a 4 inch vapor extraction pipe directly onto the well riser (casing) as well as provide access for installation and adjustment of level sensing equipment and the water extraction straw. The vapor extraction wells will be used to extract soil gases by applying vacuum, generated in an air vacuum tank, directly to the unsaturated zone soils. Each well riser will be provided with a vacuum gauge for measurement of the vacuum level applied to the well.

C. Groundwater Extraction: In addition, each well will also be provided with a water extraction straw, set at the desired depth within the well, as specified by the Contract Drawings, and run coaxially through the vapor extraction pipe, from the

well to the water extraction manifold. A vacuum applied to the manifold, generated by the water extraction tank and water discharge pump system will facilitate groundwater extraction from the wells through the water extraction straw. Intrinsically-safe water level sensors will be installed into each well to provide a control signal to the corresponding water extraction manifold solenoid valve in order to control each well's water extraction rate and pumping level.

1.5 SUBMITTALS FOR REVIEW

A. Section 1E4 - Shop Drawing Submittal and Correspondence Procedure

B. Product Data: Include data indicating rated capacities, working pressure, materials of construction, and accessories.

1.6 SUBMITTALS FOR INFORMATION

A. Manufacturer's Installation Instructions: Assembly, and installation instructions.

1.7 SUBMITTALS AT PROJECT CLOSEOUT

A. Section - 1I2 - Record Documents

1.8 QUALITY ASSURANCE

A. Perform Work in accordance with references identified in sections listed in 1.2 Related Sections.

B. Submit proof of state well drillers/pump installers license to perform this work.

1.9 SEQUENCING

A. Sequence Work to occur before placement of water and vapor extraction piping interconnecting the extraction wells with the VES trailer.

PART 2 PRODUCTS

2.1 MATERIALS

A. Tee Wye Fitting: See Section 15060.

B. Rigid and Flexible Ground Pipe Coupling: See Section 15060.

C. Steel Pipe, Nipples, Couplings, Caps, and Fittings: See Section 15060.

D. Vacuum Gauge Assemblies: See Section 15980.

E. Water Extraction Straw: See Section 15060.

F. Level Sensors: See Section

G. Foot Valve: See Section 15060.

H. Straw Centralizer: 4" x 1" S.S. nylon construction or other material compatible with a 1.5% toluene concentration in air. Shall fit firm and snug within well casing and have an open web spider configuration such that cause minimal soil gas flow restriction will occur. Johnson Type 304 Centering or equal.

I. Adjustable Tethering Cable Assembly: 1/8" 7 x 19 Strand Core Type 304 S.S. Wire Rope, McMaster Carr Supply Co., Part No. 3461T65, or equal. Contractor shall submit shop drawing of Tethering Assembly showing proposed cable connections to 6" pipe cap and 5 lb weight, as well as ground wire connection and level sensors. Assembly to allow for easy adjustability of level sensor elevations and spacing.

PART 3 EXECUTION

3.1 INSTALLATION

A. Install all equipment in accordance with manufacturer's instructions (where applicable), as shown on the contract drawings and per approved shop drawings.

B. Electrical Connections: Refer to Section 16A.

C. Insulate and heat trace well head providing means for access to key components, such as level sensors, extraction straw, and conduit box. Pressure gauge face must be visible (backmounted face is unacceptable). Refer to Sections 15260 and 16C5.

3.2 TOLERANCES

A. Initial level sensor settings and water extraction straw setting shall be within $\pm$ 1 inch of settings as shown on the contract drawings.

B. Plumbness and alignment shall be sufficient to allow proper operation, access and removal, installation, and inspection of all components.

3.3 TESTING

A. Notify Engineer 3 days prior to testing.

B. Test all grooved joints in accordance with grooved fitting manufacturer's requirements.

C. Verify level sensor continuity and function.

3.4 CLEANING

A. Clean piping in preparation for testing.

END OF SECTION

SECTION 02671B

GROUNDWATER EXTRACTION WELL MODIFICATIONS

PART 1 GENERAL

1.1 SECTION INCLUDES

A. Modifying existing well VE-7 for groundwater extraction.

B. Water and system testing and certification.

1.2 RELATED SECTIONS

A. Section 15060 - SVE Piping and Appurtenances

B. Section 15140 - Supports and Anchors

C. Section 15260 - Piping Insulation

D. Section 16111 - Conduit

E. Section 15980 - Functional Description and Instrumentation and Controls

1.3 REFERENCES

A. Refer to 1.2 Related Sections.

1.4 SYSTEM DESCRIPTION

A. One monitoring well (VE-7) will be modified as specified by the Contract Drawings. The well will be fitted with a Pitless Adaptor to facilitate installation of a 4" submersible pump, as well as the required interfacing with 1" drop and discharge piping. The Pitless Adaptor will also provide access for installation and adjustment of level sensing equipment required to facilitate extraction and discharge of groundwater from well VE-7 to the common 2" groundwater discharge piping. This common discharge pipe will combine contaminated groundwater flows from the VE-7 and the other SWMU-11 extraction wells and deliver it to equalization tank #2. The well will also be provided with a throttling valve and pressure gauge assembly on the 1" aboveground discharge piping to allow for required adjustment of the submersible pump.

Intrinsically-safe water level sensors will be installed into the well to provide a control signal to the control panel in order to start and stop the submersible pump and control the pumping level. None Aqueous Phase Liquid (NAPL) is not anticipated to be encountered.

1.5 SUBMITTALS FOR REVIEW

A. Section 1E4 - Shop Drawing Submittal and Correspondence Procedure

B. Product Data: Include data indicating rated capacities, performance curves, working pressure, materials of construction, and accessories.

C. Pumping Test: Results of pumping test data for the purpose of verifying the pump's performance only.

1.6 SUBMITTALS FOR INFORMATION

A. Manufacturer's Installation Instructions: Assembly, and installation instructions in accordance with provisions of Section 1E4.

1.7 SUBMITTALS AT PROJECT CLOSEOUT

A. Section - 1I2 - Record Documents

1.8 QUALITY ASSURANCE

A. Perform Work in accordance with references identified in sections listed in 1.2 Related Sections.

B. Submit proof of state well drillers/pump installers license to perform this work.

1.9 SEQUENCING

A. Sequence Work to occur before placement of water and discharge piping interconnecting the groundwater extraction well with the VES trailer.

PART 2 HARDWARE AND EQUIPMENT

2.1 SUBMERSIBLE PUMP: Manufacturer/Model: Grundfos Redi-Flo4 5E3 Environmental pump complete with Grundfos Environmental Motor and 1" FNPT Discharge. Motor Data: 1/3 HP, 3450 RPM, 230 VAC, single phase, 60 Hz with a 1.75 service factor.

2.2 PITLESS ADAPTER: Manufacturer: Baker, Evansville, Wisconsin
Model: SA4X1 Snappy Pitless Adapter
Provides clearance for installation of a 4" pump within 4" casing, as well as providing a connection between the 1" drop pipe and 1" discharge piping. Other types acceptable if they meet the requirements of the application.

2.3 RIGID AND FLEXIBLE GROOVED PIPE COUPLING: See Section 15060.

2.4 STEEL PIPE, NIPPLES, COUPLINGS, CAPS, AND FITTINGS: See Section 15060.

2.5 PRESSURE GAUGE ASSEMBLY: See Section (? C&I).

2.6 DROP PIPE: 1" Sch. 40 black steel, straight threaded and coupled.

2.7 LEVEL SENSORS: See Section (? C&I).

2.8 CHECK VALVE: Tag No. FV-069 - See Section 15060.

2.9 LEVEL SENSOR MOUNTING DETAILS: 1/8" 7 x 19 Strand Core Type 304 S.S. Wire Rope, McMaster Carr Supply Co., Part No. 3461T65, or equal. Contractor shall submit shop drawing showing proposed level sensor mounting details, as well as ground wire connection to the drop pipe. Sensor mounting detail to allow for easy adjustability of level sensor elevations and spacing.

2.10 WELL SEAL: 4" x 1" Grundfos Well Seal or equal. Plug drop pipe penetration and utilize wire parts only for motor wire and level sensor conduction access.

2.11 LINK SEAL: Line-Seal by Thunderline Corp., Belleville, MI. Provide correct selection for sealing annular space between ID of 3" Sch. 40 Steel Pipe and OD at 1" Sch. 40 Steel Pipe.

PART 3 EXECUTION

3.1 EXAMINATION

A. Verify site conditions under provisions of Section 01041.

3.2 PREPARATION

A. Protect structures near the well from damage.

3.3 INSTALLATION

A. Install all equipment in accordance with manufacturer's instructions (where applicable).

B. Electrical Connections: Refer to Section (Elec.?)

C. Adjust throttling valve such that pump operates within manufacturer's acceptable range while discharging into system during condition of pumping with and without SVE groundwater pump system activation.

3.4 TOLERANCES

A. Initial level sensor settings and water extraction straw setting shall be within $\pm$ 1 inch of settings as shown on the contract drawings.

B. Plumbness and alignment shall be sufficient to allow for proper operation, drawings, access and removal, installation, and inspection of all components.

3.5 TESTING

A. Notify Engineer 3 days prior to testing.

B. Perform Hydrostatic Leak Test on all piping and fittings.

C. Perform Start Pump Test and obtain 3 data points minimum (Discharge Pressure, Flow Rate) to verify pump performance.

3.6 CLEANING

A. Clean piping in preparation for testing.

END OF SECTION

SECTION 02800
FENCING

PART 1 GENERAL

1.1 SECTION INCLUDES

A. Furnish and install fencing around the forcemain.

1.2 RELATED SECTIONS

1. Section 03300, Cast-in-Place Concrete.

1.3 QUALITY ASSURANCE

A. Erector Qualifications: Erector ust be a firm experienced in the erection of fencing of the type specified.

B. Design Criteria: Comply with the standards of the Chain Link Fence Manufacturer's Institute for "Galvanized Steel Chain Link Fence Fabric" and Federal Specification RR-F-191 (latest revision), unless otherwise shown or specified.

C. Source Quality Control: Provide each type of fence and gate as a complete unit produced by a single manufacturer, including necessary erection accessories, fittings and fastenings.

D. Reference Standards: Comply with applicable provisions and recommendations of the following, except as otherwise shown or specified:

1. ASTM A 53, Specification for Pipe, Steel, Black and Hot-Dipped Zinc-Coated (Galvanized) Welded and Seamless.

2. ASTM A 121, Specification for Zinc-Coated (Galvanized) Steel Barbed Wire.

3. ASTM A 153, Specification for Zinc Coating (Hot-Dip) on Iron and Steel Hardware.

4. ASTM A 392, Specification for Zinc-Coated Steel Chain-Link Fence Fabric.

5. Chain Link Fence Manufacturer's Institute, Galvanized Steel Chain-Link Fence Fabric.

6. Federal Specification, RR-F-191 (latest revision), Fencing, Wire and Post, metal (Chain-Link Fence Fabric).

1.4 SUBMITTALS

A. Samples: Submit for approval the following:

1. Approximately 6 inches long, or 6 inch square of fabric material, framework members, and typical accessories, in a full range of manufacturer's standard and custom colors. ENGINEER's review will be for color and texture only. Compliance with all other requirements is the exclusive responsibility of the CONTRACTOR.

B. Shop Drawings: Submit for approval the following:

1. Plan layout and details illustrating fence height, location and sizes of posts, rails, braces, gates, footings, operators, hardware list and erection procedures.

2. Copies of manufacturer's technical data test reports on physical properties, and installation instructions for steel fences and gates.

1.5 PRODUCT DELIVERY, STORAGE AND HANDLING

A. Delivery of Materials: Deliver material in manufacturer's original packaging with all tags and labels intact and legible.

B. Handling of Materials: Handle and store material in such manner as to avoid damage.

PART 2 PRODUCTS

2.1 GENERAL

A. Pipe sizes specified are commercial pipe sizes.

B. Tube sizes specified are nominal outside dimension.

C. Rolled-formed section sizes are the nominal outside dimensions.

D. Finish for Framework and Appurtenances: Furnish the following finishes for steel framework and appurtenances:

1. Galvanized finish with minimum weights of zinc as follows:

a. Pipe: ASTM A 53, Schedule 40, 1.8 ounce zinc per square foot.

b. Hardware and Accessories: ASTM A 153, zinc weight per Table I, Federal Specification RR-F-191 (latest revision).

2.2 FABRIC

A. Furnish chain link fabric as follows:

1. One-piece fabric widths, for fence heights up to 12 feet.

a. No. 9 gage wires.

2. Top salvages twisted and barbed and bottom selvage knuckled for fabric cover 60 inches high.

3. Top and bottom salvages knuckled for 1-3/4-inch and 1-inch fabric.

4. Galvanized finish with not less than 2.0 ounces zinc per square foot complying with ASTM A 392, Class II.

2.3 POSTS, RAILS AND BRACES

A. End, Corner, and Pull Posts: Furnish end, corner, and pull posts of the minimum sizes and weights as follows:

1. 2.375 inches OD pipe weighing 3.65 pounds per linear foot.

B. Line Posts: Furnish line posts of the minimum sizes and weights as follows. Space posts 10 feet on centers maximum, unless otherwise shown.

1. Over 6 feet fabric height:

a. 2.375 inches OD pipe weighing 3.65 pounds per linear foot.

C. Gage Posts: Furnish gate posts for supporting single gate leaf, or one leaf of a double gate installation, for nominal gate widths as follows:

1. Over 13 feet and up to 18 feet wide:

a. 6.625 inches OD pipe weighing 18.97 pounds per linear foot.

D. Center Rails Between Line Posts: Furnish center rails between line posts where indicated, consisting of 1.660 inch OD pipe weighing 1.35 pounds per linear foot.

E. Post Brace Assembly: Furnish bracing assemblies at end and gate posts at both sides of corner and pull posts, with the horizontal brace located at mid-height of the fabric.

1. Use 1.660 inch OD pipe weighing 1.35 pounds per linear foot for horizontal brace and 3/8 inch diameter rod with turnbuckle for diagonal truss.

F. Tension Wire: Furnish tension wire consisting of aluminized 7 gage coiled spring wire.

1. Locate at bottom of fabric only.

G. Barbed Wire Supporting Arms: Furnish pressed steel, wrought iron, or malleable iron barbed wire supporting arms, complete with provisions for anchorage to posts attaching 3 rows of barbed wire to each arm. Supporting arms shall be integral with post top weather cap. Provide following type:

1. Single vertical arm, one for each post where shown.

H. Barbed Wire: 2 strand, 11 gage wire with 14 gage, 4-point aluminum barbs spaced 5 inches on center, as follows:

I. Post Tops: Pressed steel, wrought iron, or malleable iron, designed as a weathertight closure cap, for tubular posts. Furnish one cap for each post unless equal protection is afforded by combination post top cap and barbed wire supporting arm, where barbed wire is required

1. Furnish caps with openings to permit through passage of the top rail.

J. Stretcher Bars: One piece lengths equal to full height of fabric, with a minimum cross-section of 3/16 inch by 3/4 inch. Provide one stretcher bar for each gate and end post, and 2 for each corner and pull post, except where fabric is integrally woven into the post.

K. Stretcher Bar Bands: Steel, galvanized, 0.078 to 0.108 inches thick depending on post diameter, spaced not over 15 inches on center to secure stretcher bars to end, corner, pull, and gate posts.

1. Bands may also be used with special fittings for securing rails to end, corner, pull and gate posts.

2.4 GATES

A. Fabricate gate perimeter frames of tubular members. Provide additional horizontal and vertical members to ensure proper gate operation and for attachment of fabric, hardware and accessories. Space so that frame members are not more than 8 feet apart. Fabricate as follows:

1. Up to 6 feet high, or leak width 8 feet or less:

   a. 1.660 inch OD pipe weighing 1.80 pounds per linear foot

2. Over 6 feet high, or leaf width exceeding 8 feet:

   a. 1.90 inch OD pipe weighing 2.72 pounds per linear foot.

B. Assemble gate frames by welding or with special malleable or pressed steel fittings and rivets for rigid connections. Use same fabric as for fence. Install fabric with stretcher bars at vertical edges. Bars may also be used at top and bottom edges. Attach stretchers to gate frame at not more than 15 inches on center. Attach hardware with rivets or by other means which will provide security against removal or breakage.

C. Install diagonal cross-bracing consisting of 3/8-inch diameter adjustable length truss rods on gates where necessary to ensure frame rigidity without sag or twist.

1. Where barbed wire is shown above gates, extend the end members of gate frames 1 foot-0 inch above the top member and prepare to receive 3 strands of wire. Provide necessary clips for securing wire to extensions.

D. Gate Hardware: Furnish the following hardware and accessories for each gate.

1. Hinges: Pressed or forged steel or malleable iron to suit gate size, non-lift-off type, offset to permit 180 degrees gate opening. Provide 1-1/2 pair of hinges for each leaf over 6 feet nominal height.

2. Latch: Forked type or plunger-bar type to permit operation from either side of gate, with padlock eye as integral part of latch.

3. Keeper: Provide keeper for all vehicle gates, which automatically engages the gate leaf and holds it in the open position until manually released.

4. Double Gates: Provide gate stops for double gates, consisting of much room type or flush plate with anchors. Set in concrete to engage the center drop rod or

plunger bar. Include locking device and padlock eyes as an integral part of the latch, using one padlock for locking both gate leaves.

2.5 MISCELLANEOUS MATERIALS AND ACCESSORIES

A. Wire Ties: For tying fabric to line posts, use 9 gage wire ties spaced 12 inches on center. For typing fabric to rials and braces, use 9 gage wire ties spaced 24 inches on center. For typing fabric to tension wire, use 11 gage hog rings spaced 24 inches on center. Finish of ties to match fabric finish.

1. Manufacturer's standard procedure will be accepted if of equal strength and durability.

PART 3 EXECUTION

3.1 INSPECTION

A. CONTRACTOR and his installer must examine the conditions under which the fence and gates are to be installed and notify CONTRACTOR in writing of conditions detrimental to the proper and timely completion of the Work. Do not proceed with the Work until unsatisfactory conditions have been corrected in a manner acceptable to CONTRACTOR.

3.2 PREPARATION

A. Do not begin fence installation and erection before th final grading is completed, with finish elevations established.

3.3 INSTALLATION

A. Install framework, fabric and accessories in accordance with ASTM F 567.

B. Excavation: Drill holes of diameters and spacings shown, for post footings in firm, undisturbed or compacted soil.

1. If not shown on the Drawings, excavate holes to the minimum diameters as recommended by fence manufacturer.

2. Unless otherwise indicated, excavate hole depths approximately 3 inches lower than the post bottom, with bottom of posts set not less than 36 inches below the surface when in firm, undisturbed soil.

a. Spread soil from excavations uniformly adjacent to the fence line, or on adjacent areas of th site, as directed.

C. Setting Posts: Remove loose and foreign materials from sides and bottoms of holes, and moisten soil prior to placing concrete.

1. Center and align posts in holes 3 inches above bottom of excavation.

2. Place concrete around posts in a continuous pour, and vibrate or tamp for consolidation. Check each post for vertical and top alignment, and hold in position during placement and finishing operations.

3. Trowel finish tops of footings, and slope or dome to direct water away from posts. Extend footings for gate posts to the underside of bottom hinge. Set keeps, stops, sleeves and other accessories into concrete as required.

4. Keep exposed concrete surfaces moist for at least 7 days after placement, or cure with membrane curing materials, or other acceptable curing method.

D. Concrete Strength: Allow concrete to attain at least 75 percent of its minimum 28-day compressive strength, but in no case sooner than 7 days after placement, before rials, tension wires, barbed wire, or fabric is installed. Do not stretch and tension fabric and wires, and do not hang gates until the concrete has attained its full design strength.

1. Take samples and test concrete to determine strength as specified in concrete sections of Division 3.

E. Top Rails: Run rail continuously through post caps or extension arms, bending to radius for curved runs. Provide expansion couplings as recommended by fencing manufacturer.

F. Center Rails: Provide center rails only where shown. Install in one piece between posts and flush with post on fabric side, using special offset fittings where necessary.

G. Brace Assemblies: Install braces so posts are plumb when diagonal rod is under proper tension.

H. Tension Wire: Install tension wires by weaving through the fabric and tying each post with not less than 6 gage galvanized wire, or by securing the wire to he fabric.

I. Fabric: Leave approximately 2 inches between finish grade and bottom selvage, except where bottom of fabric extends into concrete. Pull fabric taut and tie to posts, rials,

and tension wires. Install fabric on security side of fence, and anchor to framework so that fabric remains in tension after pulling force is released.

J. Repair coatings damaged in the shop or during field erection by recoating with manufacturer's recommended repair compounds, applied per manufacturer's direction.

K. Stretcher Bars: Thread through or clamp to fabric 4 inches on center, and secure to posts with metal bands spaced 15 inches on center.

L. Barbed Wire: Install 3 parallel wires on each extension arm; on security side of fence, unless otherwise indicated. Pull wire taut and fasten securely to each extension arm.

M. Gates: Install gates plumb, level, and secure for full opening without interference. Install ground-set items in concrete for anchorage, as recommended by the fence manufacturer. Adjust hardware for smooth operation and lubricate where necessary.

O. Tie Wires: Use U-shaped wires conforming to diameter of pipe. Clasp pipe and fabric firmly with ends twisted at least 2 full turns. Bend ends of wire to minimize hazard to persons or clothing.

P. Fasteners: Install nuts for tension band and hardware bolts on side of fence opposite fabric side. Peen ends of bolts or score threads to prevent removal of nuts.

3.4 ADJUSTMENT AND CLEANING

A. Adjust all fencing and gates and leave in good working condition.

B. Repair or replace any broken or bent components as directed by the CONTRACTOR.

C. Protect gates and fencing from construction traffic until acceptance of the Work.

END OF SECTION 02800

SECTION 03010
GROUT

PART 1 GENERAL

1.1 SECTION INCLUDES

A. Furnish and install grout at all column and beam bearing, equipment bases, handrails and railings, and construction joints. The types of grout include non-shrink, epoxy types, non-shrink, non-metallic type, and ordinary cement-sand.

1.2 RELATED SECTIONS:

1. Section 03300, Cast-in-Place Concrete.
2. Section 04100, Mortar
3. Section 05120, Structural Steel.
4. Section 05520, Aluminum Handrails and Railings.

1.3 QUALITY ASSURANCE

A. Reference Standards: Comply with applicable provisions and recommendations of the following, except as otherwise shown or specified.

1. ASTM C 144, Aggregate for Masonry Mortar.
2. ASTM C 150, Portland Cement.
3. ASTM C 109, Compressive Strength of Hydraulic Cement Mortars (using 2-in. or 50 mm. Cube Specimens)
4. ASTM C 191, Time of Setting of Hydraulic Cement by Vicar Needle.
5. CRD-C-588, Specifications for Non-Shrink Grout.
6. CRD-C-619, Specification for Grout Fluidifier.

1.4 SUBMITTALS

A. Shop Drawings: Submit for approval the following:

1. Manufacturer's specifications and installation instructions for all proprietary materials.

2. For ordinary cement grout, submit copies of grout design mix and laboratory test reports for grout strength tests.

B. Reports and Certificates:

1. For proprietary materials, submit copies of reports on quality control tests.

2. For nonproprietary materials, submit certification that materials meet specification requirements.

1.5 PRODUCT DELIVERY, STORAGE AND HANDLING

A. Delivery of Materials: Grout materials from manufacturers shall be delivered in unopened containers and shall bear intact manufacturer's labels.

B. Storage of Materials: Grout materials shall be stored in a dry shelter and shall be protected from moisture.

PART 2 PRODUCTS

2.1 MATERIALS

A. Non-metallic, 100 percent solids, high strength epoxy grout.

1. Use clean well graded sand with epoxy resins suitable for use on dry or damp surfaces.

2. Product and Manufacturer: Provide one of the following:

a. Euco High Strength Grout by The Euclid Chemical Company.

b. Sikadur 42 Grout by Sika Chemical Company.

c. Five Star Epoxy Grout by U.S. Grout Corporation.

B. Non-Shrink, Non-Metallic Grout:

1. Pre-mixed non-staining cementitious grout requiring only the addition of water at the jobsite.

2. Product and Manufacturer: Provide one of the following:

   a. Euco N-S by The Euclid Chemical Company.

   b. Masterflow 713 by Master Builders Company.

   c. Sika Grout 212 by Sika Chemical Company.

C. Ordinary Cement-Sand Grout: Prepare design mixes of ordinary cement grout. Mixes subject to the following limitations:

1. Cement:

   a. Portland cement, ASTM C150, Type II; or blended hydraulic cement, ASTM C595, Type 1P.

2. Aggregates: ASTM C33 and as herein specified.

   a. Do not use aggregates containing soluble salts or other substances such as iron sulfides, pyrite, marcasite, ochre, or other materials that can cause stains on exposed concrete surfaces.

   b. Fine Aggregate: Clean, sharp, natural sand free from loam, clay, lumps or other deleterious substances.

      1) Dune sand, bank run sand and manufactured sand are not acceptable.

   c. Coarse Aggregate: Clean, uncoated, processed aggregate containing no clay, mud, loam, or foreign matter, as follows:

      1) Crushed stone, processed from natural rock or stone.

      2) Washed gravel, either natural or crushed. Use of slag and pit or bank run gravel is not permitted.

      3) Coarse Aggregate Size: Size to be ASTM C33, Nos. 7 for Class "B" grout. Coarse aggregate <u>not</u> permitted in Class "A" grout.

3. Admixtures: Provide admixtures produced by established reputable manufacturers, and use in compliance with the manufacturer's printed instruction. Do not use admixtures, which have not been incorporated and tested in the accepted mixes, unless otherwise authorized in writing by ENGINEER. Refer to Section 03300 for additional admixtures requirements.

4. Proportioning and Design of Mixes: Prepare design mixes for each glass of grout. Mixes subject to the following limitations:

   a. Class "A" Grout:

      1) Specified 28-day Compressive Strength: 4,000 psi.

      2) Maximum Water-Cement Ratio by Weight: 0.45.

      3) Fine Aggregate meeting ASTM C33.

      4) Air Content Percentage: 9±1%.

      5) Minimum Cement Content in Pounds per Cubic Yard: 658.

   b. Class "B" Grout:

      1) Specified 28-day Compressive Strength: 3,000 psi.

      2) Maximum Water-Cement Ratio by Weight: 0.50.

      3) Fine and Coarse Aggregate (No. 7) meeting ASTM C33.

      4) Air Content Percentage: 7±1%.

      5) Minimum Cement Content in Pounds per Cubic Yard: 611.

5. Use an independent testing company acceptable to the ENGINEER for preparing and reporting proposed mix designs.

   a. The testing company shall not be the same as used for field quality control testing unless approved by the ENGINEER.

6. Proportion mixes by either laboratory trial batch or field experience methods, using materials to be employed on the Project for grout required. Comply with ACI 211.1 and report to the ENGINEER the following data:

   a. Complete identification of aggregate source of supply.

   b. Tests of aggregates for compliance with specified requirements.

   c. Scale weight of each aggregate.

d. Absorbed water in each aggregate.

e. Brand, type and composition of cement.

f. Brand, type and amount of each admixture.

g. Amounts of water used in trial mixes.

h. Proportions of each material per cubic yard.

i. Gross weight and yield per cubic yard of trial mixtures.

j. Measured slump.

k. Measured air content.

l. Compressive strength developed at 7 days and 28 days, from not less than 3 test specimens cast for each 7-day and 28-day test, and for each design mix.

7. Submit written reports to the ENGINEER of proposed mix of grout at least 30 days prior to start of Work. Do not begin grout production until mixes have been approved by the ENGINEER.

8. Laboratory Trial Batches: When laboratory trial batches are used to select grout proportions, prepare test specimens and conduct strength tests as specified in ACI 301, Chapter 3 - Proportioning. However, 4,000 psi mixes need not be designed for greater than 3,400 psi, regardless of the production facilities standard deviation.

9. Field Experience Method: When field experience methods are used to select grout proportions, establish proportions as specified in ACI 301, Chapter 3.

10. Admixtures: Use air-entraining admixture in all grout. Provide not less than 4-1/2 percent nor more than 7-1/2 percent entrained air. Use amounts of admixtures as recommended by the manufacturer for climatic conditions prevailing at the time of placing. Adjust quantities and types of admixtures as required to maintain quality control. Do not use admixtures which have not been incorporated and tested in the accepted design mix, unless otherwise authorized in writing by the ENGINEER.

11. Slump Limits: Proportion and design mixes to result in grout slump at the point of placement of not more than 5 inches.

D. Water:

1. Use clean, fresh, potable water free from injurious amounts of oils, acids, alkalies or organic matter.

PART 3 - EXECUTION

3.1 INSPECTION

A. The CONTRACTOR and his installer shall examine the substrate and conditions under which grout is to be placed, and notify ENGINEER in writing of unsatisfactory conditions. Do not proceed with the work until unsatisfactory conditions have been corrected in a manner acceptable to ENGINEER.

3.2 INSTALLATION

A. General:

1. Place grout as shown and in accordance with manufacturer's instructions. If manufacturer's instructions conflict with the Specifications do not proceed until ENGINEER provides clarification.

2. Drypacking will not be permitted.

3. Manufacturers of proprietary products shall make available upon 72 hours notification the services of a qualified, full time employee to aid in assuring proper use of the product under job conditions.

4. Placing grout shall conform to temperature and weather limitations in Section 03300.

B. Columns, Beams and Equipment Bases:

1. After shimming equipment to proper grade, securely tighten anchor bolts. Properly form around the base plates, allowing sufficient room around the edges for placing the grout. Adequate depth between the bottom of the base plate and the top of concrete base must be provided to assure that the void is completely filled with the epoxy grout.

2. After shimming columns, beams and equipment to proper grade, securely tighten anchor bolts. Properly form around the base plates allowing sufficient room around the edges for placing the grout. Adequate depth between the bottom of

the base plate and the top of concrete base must be provided to assure that the void is completely filled with the non-shrink, non-metallic grout.

C. Handrails and Railings:

1. After posts have been properly inserted into the holes or sleeves, fill the annular space between posts and sleeve with the non-shrink, non-metallic grout. Bevel grout at juncture with post so that moisture flows away from post.

D. Grout Fill Around Reinforcement in Masonry Work:

1. Provide ordinary Class "B" cement grout for grout fill in masonry lintels, bond beams and pilasters. Site mixing of grout is acceptable. Use of water-reducing admixture is not required.

END OF SECTION 03010

SECTION 03300
CONCRETE

PART 1 GENERAL

1.1 SECTION INCLUDES

A. Furnish and install cast-in-place concrete reinforcement and related materials.

B. General:

1. Class "A" concrete shall be steel reinforced and includes the following:

   a. Precast structures.

   b. Other reinforced concrete structures.

2. Class "B" concrete shall be placed without forms or with simple forms, with little or no reinforcing, and includes the following:

   a. Concrete fill.

   b. Curbs and gutters.

   c. Sidewalks.

   d. Encasements, etc.

3. Steel Reinforcement: Includes bars, ties, supports and welded wire fabric.

1.2 QUALITY ASSURANCE

A. Source Quality Control:

1. Concrete Testing Service:

   a. CONTRACTOR shall employ acceptable testing laboratory to perform materials evaluation, testing and design of concrete mixes.

   b. CONTRACTOR's laboratory shall also evaluate concrete delivered to and placed at the site.

b. CONTRACTOR's laboratory shall also evaluate concrete delivered to and placed at the site.

2. Certificates, signed by concrete producer and CONTRACTOR, may be submitted in lieu of material testing when acceptable to ENGINEER.

3. Quality Control: Perform sampling and testing during concrete placement, as follows:

4. Quality Control: CONTRACTOR's testing laboratory will perform sampling and testing during concrete placement, as follows:

a. Sampling: ASTM C 172.

b. Slump: ASTM 143, one test for each load at point of discharge.

c. Air Content: ASTM C 31, one for each set of compressive strength specimens.

d. Compressive Strength: ASTM C 39, one set for each 50 cubic yards or fraction thereof of each class of concrete; 1 specimen tested at 7 days, 2 specimens tested at 28 days.

1) When the total quantity of concrete is less than 50 cubic yards, the strength tests may be waived by CONTRACTOR if field experience indicates evidence of satisfactory strength.

5. Report test results in writing to ENGINEER on same day tests are made.

B. Reference Standards: Comply with the applicable provisions and recommendations of the following, except as otherwise shown or specified.

1. ACI 301, Specifications for Structural Concrete for Building (includes ASTM Standards referred to herein except ASTM A 36).

2. ACI 347, Recommended Practice for Concrete Formwork.

3. ACI 304, Recommended Practice for Measuring, Mixing, Transporting, and Placing Concrete.

4. ACI 315, Manual of Standard Practice for Detailing Reinforced Concrete Structures.

7. ASTM A 36, Structural Steel.

8. Concrete Reinforcing Steel Institute, Manual of Standard Practice, include ASTM Standards referenced herein.

1.3 SUBMITTALS

A. Samples: Submit samples of materials as specified and may be requested by ENGINEER including names, sources and descriptions.

B. Shop Drawings: Submit for approval the following:

1. Copies of manufacturer's specifications with application and installation instructions for proprietary materials and items, including admixtures and bonding agents.

2. Drawings for fabrication, bending, and placement of concrete reinforcement. Comply with ACI 315, Chapters 1 thru 8. For walls, show elevations to a minimum scale of 1/4 inch to 1 foot. Show bar schedules, stirrup spacing, diagrams of bent bars, arrangements and assemblies, as required for the fabrication and placement of concrete reinforcement.

3. List of concrete materials and concrete mix designs proposed for use. Include the results of all tests performed to qualify the materials and to establish the mix designs in accordance with ACI 301, 3.9. Submit written report to ENGINEER for each proposed concrete mix at least 15 days prior to start of Work. Do not begin concrete production until mixes have been reviewed and are acceptable to ENGINEER. Mix designs may be readjusted when material characteristics, job conditions, weather, test results, or other circumstances warrant. Do not use revised concrete mixes until submitted to and accepted by ENGINEER.

C. Laboratory Test Reports: Submit copies of laboratory test reports for concrete cylinders, materials and mix design tests. ENGINEER'S review will be for general information only. Production of concrete to comply with specified requirements is the responsibility of CONTRACTOR.

1.4 PRODUCT DELIVERY, STORAGE AND HANDLING

A. Deliver concrete reinforcement materials to the site bundled, tagged and marked. Use metal tags indicating bar size, lengths, and other information corresponding to markings shown on placement diagrams.

B. All materials used for concrete must be kept clean and free from all foreign matter during transportation and handling and kept separate until measured and placed in the mixer. Bins or platforms having hard clean surfaces shall be provided for storage. Suitable means shall be taken during hauling, piling and handling to insure that segregation of the coarse and fine aggregate particles does not occur and the grading is not affected.

PART 2 - PRODUCTS

2.1 CONCRETE MATERIALS

A. Portland Cement: ASTM C 150, Type II.

B. Aggregates: ASTM C 33.

1. Fine Aggregate: Clean, sharp, natural sand free from loam, clay, lumps or other deleterious substances. Dune sand, bank ran sand and manufactured sand are not acceptable.

2. Coarse Aggregate: Clean, uncoated, processed aggregate containing no clay mud, loam or foreign matter, as follows:

a. Crushed stone, processed from natural rock or stone.

b. Washed gravel, either natural or crushed. Use of slag and pit or bank run gravel is not permitted.

C. Coarse Aggregate Size: Size to be ASTM C 33, Nos. 57 or 67, unless permitted otherwise by ENGINEER.

D. Water: Clean, drinkable.

E. Air-Entraining Admixture: AST C 260.

F. Water-Reducing Admixture: ASTM C 494. Only use admixtures which have been tested and accepted in mix designs.

2.2 FORM MATERIALS

A. Provide form materials with sufficient stability to withstand pressure of placed concrete without bow or deflection.

B. Exposed Concrete Surfaces: Acceptable panel-type to provide continuous, straight, smooth, as-cast surfaces. Use largest practical sizes to minimize form joints.

C. Unexposed Concrete Surfaces: Suitable material to suit project conditions.

D. Provide 3/4-inch chamfer at all exposed corners.

2.3 REINFORCING MATERIALS

A. Reinforcing Bars: ASTM A 615, Grade 60.

1. Bars noted on plans to be epoxy-coated shall be coated with Scotch-kote Brand Fusion Bonded Epoxy Coating 213 or 214 as manufactured by 3M, St. Paul Minnesota. Coating shall be applied to cleaned steel reinforcing bars by the electrostatic spray method and fully cured in accordance with the recommendations of the manufacturer of the coating material. Before coating, the bars shall be cleaned by abrasive blast cleaning to meet the requirements of near white metal in accordance with SSPC-SP10. The Coating shall be applied to the cleaned surface as soon as possible after cleaning, and before osication of the surface discernable to the unaided eye occurs. However, in no case shall application of the coating be delayed more than 8 hours after cleaning. The film thickness of the coating after curing shall be 5 to 20 mils, inclusive, as measured using ASTM G 12 on the body of the reinforcing bar between the deformations and/or ribs on a straight length of bar. The coating shall be free from holes, voids, cracks, and damaged areas discernable to the unaided eye. Damaged or other unsatisfactory areas shall be patched with a coring material and by a method recommended by the coating manufacturer.

B. Welded Wire Fabric: ASTM A 185.

C. Steel Wire: ASTM A 82.

D. Supports for Reinforcement: Bolsters, chairs, spacers and other devices for spacing, supporting and fastening reinforcement in place.

1. Use wire bar type supports complying with CRSI recommendations, except as specified below. Do not use wood, brick, or other unacceptable materials.

2. For slabs on grade, use supports with sand plates or horizontal runners where base materials will not support chair legs.

3. For all concrete surfaces, where legs of supports are in contact with forms, provide supports complying with CRSI, Manual of Standard Practice as follows:

   a. Either hot-dip galvanized, plastic protected or stainless steel legs.

4. Over waterproof membranes, use precast concrete chairs.

2.4 RELATED MATERIALS

A. Waterstops:

1. Flat dumbbell or centerbulb type, size to suit joints, of Polyvinyl Chloride.

   a. Manufacturer: Provide waterstops of one of the following:

      1) W.R. Meadows, Incorporated.

      2) A.C. Horn, Incorporated.

B. Membrane-Forming Curing compounds: ASTM C 309, Type I.

C. Epoxy Bonding Agent:

1. Two-component epoxy resin bonding agent.

   a. Product and Manufacturer: Provide one of the following:

      1) Sikadur Hi-Mod by Sika Chemical Corporation.

      2) Epoxtite Binder (Code No. 2390) by A.C. Horn, Incorporated.

D. Joint Fillers: See Section 7J.

2.5 MOISTURE BARRIER

A. Moisture Barrier: ASTM E 154:

1. Provide moisture barrier cover over prepared base material where indicated. Use polyethylene membrane not less than 8 mils thick, lapping at least 9 inches at joints.

PART 3 - EXECUTION

3.1 INSPECTION

A. CONTRACTOR and his installer shall examine the substrate and the conditions under which Work is to be performed and notify ENGINEER of unsatisfactory conditions. Do not proceed with the Work until unsatisfactory conditions have been corrected in a manner acceptable to ENGINEER.

3.2 FORMWORK

A. Formwork: Construction so that concrete members and structures are correct size, shape, alignment, elevation and position, complying with ACI 347.

B. Provide openings in formwork to accommodate Work of other trades. Accurately place and securely support items built into forms.

C. Tie holes shall be filled immediately after form removal. The cavities shall be cleaned, thoroughly dampened, and filled solid with mortar. Where appearance is essential, they shall be finished to match the surrounding surface. A bonding coat and curing is not required.

3.3 REINFORCEMENT, JOINTS, AND EMBEDDED ITEMS

A. Comply with the applicable recommendations of specified codes and standards, and CRSI, Manual of Standard Practice, for details and methods of reinforcement placement and supports.

B. Clean reinforcement to remove loose rust and mill scale, earth, ice, and other materials which reducer or destroy bond with concrete.

C. Position, support, and secure reinforcement against displacement during formwork construction or concrete placement. Locate and support reinforcing by metal chairs, runners, bolsters, spacers and hangers, as required.

1. Place reinforcement to obtain the minimum concrete coverage as shown and as specified in ACI 318. Arrange, space, and securely tie bars and bar supports together with 61 gage wire to hold reinforcement accurately in position during concrete placement operations. Set with ties so that twisted ends are directed away from exposed concrete surfaces.

2. Reinforcing steel shall not be secured to forms with wire, nails, or other ferrous metal. Metal supports subject to corrosion shall not touch formed or exposed

concrete surfaces.

D. Provide sufficient numbers of supports of strength required to carry reinforcement. Do not place reinforcing bars more than 2 inches beyond the last leg of any continuous bar support. Do not use supports as bases for runways for concrete conveying equipment and similar construction loads.

E. Splices:

1. Provide standard reinforcement splices by lapping ends, placing bars in contact, and tying tightly with wire. Comply with requirements shown for minimum lap of spliced bars.

F. Install welded wire fabric in as long lengths as practical, lapping at least one mesh.

G. Concrete shall not be placed until the reinforcing steel is inspected and permission for placing concrete is granted by ENGINEER. All concrete placed in violation of this provision will be rejected.

H. Joints: Provide construction, isolation, and control joints as indicated on drawings or required. Locate construction joints so as to not impair the strength and appearance of the structure. Place isolation and control joints in slabs on ground to stabilize differential settlement and random cracking.

I. Installation of Embedded Items: Set and build into the Work anchorage devices and embedded items required for other Work that is attached to, or supported by cast-in-place concrete. Use setting diagrams, templates, and instruction provided under other Sections and other contracts for locating and setting. Refer also to Paragraph 1.1.B., Coordination, above.

3.4 CONCRETE AND PLACEMENT

A. Proportioning and Design of Mix:

1. Minimum compressive strength at 28 days: 4000 psi.

2. Maximum water cement ratio by weight: 0.45.

3. Minimum cement content: 564 pounds per cubic yard.

4. Normal weight: 145 pounds per cubic foot.

5. Use air-entraining admixture in all concrete: provide not less than 4 percent nor

more than 8 percent entrained air for concrete exposed to freezing and thawing, and from 2 percent to 4 percent for other concrete.

6. Calcium Chloride: Do not use calcium chloride in concrete, unless otherwise authorized in writing by ENGINEER. Do not use admixtures containing calcium chloride.

B. Mob-Site Mixing: Use drum type batch machine mixer, mixing not less than 1-1/2 minutes for one cubic yard or smaller capacity. Increase mixing time at least 15 seconds for each additional cubic yard or fraction thereof.

C. Ready-Mixed Concrete: ASTM C 94.

D. Concrete Placement: Comply with ACI 304, placing concrete in a continuous operation within planned joints or sections. Do not begin placement until work of other trades affecting concrete is completed.

E. Consolidate placed concrete using mechanical vibrating equipment with hand ridding and tamping, so that concrete is worked around reinforcement and other embedded items and into all parts of forms.

F. Protect concrete from physical damage or reduced strength due to weather extremes during mixing, placement, and curing.

1. In cold weather comply with ACI 306.

2. In hot weather comply with ACI 305.

3.5 QUALITY OF CONCRETE WORK

A. Make all concrete solid, compact and smooth, and free of laitance, cracks and cold joints.

B. All concrete for liquid retaining structures, and all concrete in contact with earth, water, or exposed directly to the elements shall be watertight.

C. Cut out and properly replace to the extent ordered by ENGINEER, or repair to the satisfaction of ENGINEER surfaces which contain cracks or voids, ar unduly rough, or are in any way defective. Patches or plastering will not be acceptable.

D. Repair, removal, and replacement of defective concrete as ordered by ENGINEER shall be at no additional cost to OWNER.

3.6 CURING

A. Curing: Begin initial curing as soon as free water has disappeared from exposed surfaces. Where possible, keep continuously moist for not less than 72 hours. Continue curing use of moisture-retaining cover or membrance-forming curing compound. Cure formed surfaces by moist curing until forms are removed. Provide protection as required to prevent damage to exposed concrete surfaces.

3.7 FINISHES

A. Finish:

1. After placing concrete slabs, do not work the surface further until ready for floating. Begin floating when the surface water has disappeared or when the concrete has stiffened sufficiently. Use a wood float only. Check and level the surface plane to a tolerance not exceeding 1/4 inch in 10 feet when tested with a 10 foot straightedge placed on the surface at not less than 2 different angles. Cut down high spots and fill all low spots. Uniformly slope surfaces to drains. Immediately after leveling, refloat the surface to a uniform, smooth, granular texture.

2. After floating, begin the first trowel finish operating using a power-driven trowel. Begin final troweling when the surface produces a ringing sound as the trowel is moved over the surface.

3. Consolidate the concrete surface by the final hand troweling operation. Finish shall be free of trowel marks, uniform in texture and appearance, and with a surface plane tolerance not exceeding 1/8 inch in 10 feet when tested with a 10-foot straight edge. Grind smooth surface defects which would telegraph through applied floor covering system.

4. Use trowel finish fore the following:
   a. Interior exposed slabs unless otherwise shown or specified.

5. Apply non-slip broom finish to the exterior concrete slab and elsewhere as shown on the Drawings.

B. Apply chemical floor hardener to exposed interior concrete floor areas when cured and dry, in accordance with manufacturer's instructions.

3.8 GROUT PLACEMENT

A. General:

1. Place grout as shown and in accordance with manufacturer's instructions. If manufacturer's instructions conflict with the Specifications do not proceed until CONTRACTOR provides clarification.

2. Drypacking will not be permitted.

3. Manufacturers of proprietary products shall make available upon 72 hours notification the services of qualified, full-time employee to aid in assuring proper use of the product under job conditions.

4. Placing grout shall conform to the temperature and weather limitations described in Article 3.4 above.

END OF SECTION 03300

SECTION 04100
MORTAR

PART 1 - GENERAL

1.1 DESCRIPTION

A. Furnish all mortar. The types of mortar required includes, but is not necessarily limited to Portland cement-lime mortars, fire-resistant mortar, grouts, and miscellaneous additives.

1.2 RELATED SECTIONS:

1. Section 03010, Grout.

1.3 QUALITY ASSURANCE

A. Requirements of Regulatory Agencies: Wherever a fire-resistance classification is shown or scheduled for unit masonry construction (4-hour, 3-hour and similar designations), provide mortar and proportions complying with the requirements established by UL and other governing authorities.

B. Codes: Comply with the applicable requirements of the State of Rhode Island Official Compilation of Codes, Rules and Regulations for types of mortar Work specified.

C. Source Quality Control:

1. Do not change source or brands of mortar materials during the course of the Work.

2. Where question of compliance to the requirements of this Section arise the mortar properties specification shall take precedence over the mortar proportion specifications.

3. No change shall be made in the proportions established for mortar accepted under the property specifications nor shall materials with different physical characteristics be utilized in mortar used in the Work unless compliance with the requirements of the property specifications is re-established by Shop Drawing data submission to ENGINEER.

4. Two air-entraining materials shall not be combined in mortar.

D. Reference Standards: Comply with applicable provisions and recommendations of the following, except as otherwise shown or specified.

1. ASTM C 5, Quicklime for Structural Purposes.

2. ASTM C 91, Masonry Cement.

3. ASTM C 136, Sieve or Screen Analysis of Fine and Coarse Aggregates.

4. ASTM C 144, Aggregate for Masonry Mortar.

5. ASTM C 150, Portland Cement.

6. ASTM C 207, Hydrated Lime for Masonry Purposes.

7. ASTM C 270, Mortar for Unit Masonry.

8. ASTM C 404, Aggregates for Masonry Grouts.

9. ASTM C 476, Grout for Masonry.

10. UL, Design Numbers U901 through U908.

1.4 SUBMITTALS

A. Shop Drawings: Submit for approval the following:

1. Copies of manufacturer's specifications and instructions for each manufactured product.

2. Product specification data for integral waterproofing admixture.

1.5 PRODUCT DELIVERY, STORAGE AND HANDLING

A. Delivery of Materials: Manufactured materials, such as cement and lime, shall be delivered and stored in their original containers, plainly marked with identification of materials and manufacturer.

B. Storage of Materials:

1. Store mortar materials off the ground in a dry location and under a properly constructed shelter using tarpaulins, felt paper, or polyethylene sheets.

2. Protect liquid admixtures from freezing.

PART 2 PRODUCTS

2.1 MATERIALS

A. Portland Cement: Provide the following for portland cement-lime mortars:

1. USTM C 150, Type I.

2. Use ASTM C 150, Type III, high early strength, for laying masonry when outside temperature is less than 50°F.

3. Provide nonstaining portland cement of natural color.

4. Product and Manufacturer: Provide one of the following:

   a. Speed Portland Cement and Hi-Speed Portland Cement by Louisville Cement Company.

   b. Atlas Type I and Atlas Type III Portland Cement by Lehigh Portland Cement Company.

   c. Or equal.

5. Product and Manufacturer: Provide one of the following:

   a. White Portland Cement by Ideal Basic Industries.

   b. Atlas White Portland Cement Type I and Type III by Lehigh Portland Cement Company.

B. Hydrated Lime: ASTM C 207, Type S, or lime putty ASTM C 5.

C. Sand Aggregates

1. ASTM C 144, except for joints less than 1/4 inch use aggregate graded with 100 percent passing the No. 16 sieve.

2. White Mortar Aggregates: Provide natural white sand or ground white stone for portland cement-lime mortars.

3. Fine Aggregate for Grout: Sand, ASTM C 404, Size No.1.

4. Course Aggregate for Grout: ASTM C 404, Size No. 8 or Size No. 89.

D. Water: Free from injurious amounts of oils, acids, alkalis, or organic matter, and clean, fresh and potable.

E. Waterproofing Admixture for Load-Bearing Concrete Unit Masonry:

1. Provide an cross linking acrylic polymer integral waterproofing system.

2. Proportion and Mixing: In strict accordance with manufacturer's instructions.

3. Product and Manufacturer: Provide one of the following:

a. DRY-BLOCK Mortar Admix by Forrer Industries.
b. Or Equal

2.2 MORTAR MIXES

A. General:

1. Anti-Freeze Admixture or Agents: Not permitted.

2. Calcium Chloride: Not permitted.

B. Fire Resistant Mortar:

1. Standard: UL Design Numbers U901, U902, U903, U904, U905, U906 and U907.

2. Proportion: Use 1 part portland cement, 3 parts clean sand,and 15 percent hydrated lime (by cement volume).

C. Mortar for All Other Unit Masonry: Comply with ASTM C 270, Table 2, except limit materials to those specified herein, do not substitute ASTM C 91 masonry cement for ASTM C 150 portland cement without an approved Shop Drawing review by ENGINEER, and limit cement to lime ratio by volume as follows:

1. Type S:

a. Provide the following proportions by volume:

1) Portland Cement: 1 part.

2) Hydrated Lime or Lime Putty: Over 1/4 to 1/2 maximum.

3) Aggregate Ratio (Measured in Damp Loose Condition): Not less than 2-1/4 and not more than 3 times the sum of the volumes of cementitious materials.

b. Property Specification:

1) Average Compressive Strength, ASTM C 270: 1800 pounds per square inch.

2) Minimum Water Retention, ASTM C 270: 75 percent.

3) Maximum Air Content, ASTM C 270: 12 percent for portland cement-lime mortars.

2. Type N:

a. Provide the following proportions by volume:

1) Portland Cement: 1 part.

2) Hydrated Lime or Lime Putty: Over 1/2 to 1-1/4 maximum.

3) Aggregate Ratio (measured in damp loose condition): Not less than 2-1/4 and not more than 3 times the sum of the volumes of cementitious materials.

b. Property Specifications:

1) Average Compressive Strength, ASTM C 270: 750 pounds per square inch.

2) Minimum Water Retention, ASTM C 270: 75 percent.

3) Maximum Air Content, ASTM C 270: 12 percent for portland cement-lime mortars.

D. Grout:

1. Fine Grout:

a. Provide the following proportions by volume:

1) Portland Cement: 1 part.

2) Hydrated Lime or Lime Putty: 0 to 1/10 part.

3) Aggregate Ratio (Measured in a Damp Loose Condition): Sand; not less than 2-1/4 and not more than 3 times the sum of the volumes of cementitious materials.

b. Mix grout to have a slump of 10-inches plus or minus 1-inch, at time of placement.

2. Coarse Grout:

a. Provide the following proportions by volume:

1) Portland Cement: 1 part.

2) Hydrated Lime or Lime Putty: 0 to 1/10 part.

3) Fine Aggregate Ratio (Measured in a Damp Loose Condition): Sand; not less than 2-1/4 and not more than 3 times the sum of the volumes of cementitious materials.

4) Coarse Aggregate Ratio: Not less than 1 and not more than 2 times the sum of the volumes of cement and lime.

b. Mix grout to have a slump of 10-inches plus or minus 1-inch, at time of placement.

3. Grout Fill Around Reinforcement in Masonry Lintels: Portland cement, sand, gravel and water, to be proportioned as required to provide a 28-day minimum compressive strength of 3000 pounds per square inch.

PART 3 - EXECUTION

3.1 PREPARATION

A. Measurement of Materials:

1. Cement and Hydrated Lime: Batched by the bag.

2. Sand: Batched by volume in suitably calibrated containers, provided proper allowance is made for bulking and consolidation and for weight per cubic foot, of contained moisture.

3. Proportion of Volumetric Mixtures: One 94-pound sack of portland cement and one 50-pound sack of hydrated lime constitute nominal one cubic foot.

4. Shovel measurement: Not permitted.

B. Mortar Mixing:

1. Type of Mixer: Machine mix in approved mixer in which the quantity of water is accurately and uniformly controlled.

2. While mixer is in operation add approximately 3/4 the required water, 1/2 the sand, all the cement,a then add remainder of sand.

3. Allow batch to mix briefly then add water in small quantities until satisfactory workability is obtained.

4. Mix for not less than five minutes after all materials have been added.

5. Hydrated Lime for Mortar Requiring Lime Content: Use dry-mix method. Turn over together the materials for each batch until the even color of the mixed, dry materials indicates that cementitious material has been thoroughly distributed throughout the mass, then add water to obtain required plasticity.

6. Lime putty if approved for use shall be prepared in accordance with ASTM C 5.

7. Waterproofing Admixture: Add to mortar mix for all exterior masonry in strict accordance with manufacturer's instructions.

8. The mixer drum shall be completely emptied before recharging the next batch.

9. Limit batch size to avoid retempering. Retempering of mortar shall not be permitted.

3.2 INSTALLATION

A. Refer to the following:

1. Section 4C1, Unit Masonry Construction.

3.3 FIELD QUALITY CONTROL

A. CONTRACTOR shall engage an independent testing laboratory Yacceptable to ENGINEER, to take samples and conduct tests to evaluate air entrainment,water retention and the compliance of materials with the Specifications and to determine the compressive strength of mortar and grout. Tests shall be conducted in accordance with ASTM C 91. Test results shall be made available to ENGINEER prior to the commencement of Work.

B. After the initial test, ENGINEER may require a maximum of 5 additional tests to be conducted at his discretion.

END OF SECTION 04100

SECTION 04150
MASONRY ACCESSORIES

PART 1 GENERAL

1.1 SECTION INCLUDES

A. Furnish all masonry accessories Work including, but not necessarily limited to: continuous horizontal wire reinforcing and ties, individual wire ties, anchoring devices, and miscellaneous masonry accessories.

1.2 RELATED SECTIONS

1. Section 04100, Mortar.

2. Section 04200, Unit Masonry Construction.

3. Section 05120, Structural Steel.

4. Section 05500, Miscellaneous Metal Fabrications.

5. Section 09900, Painting.

1.3 QUALITY ASSURANCE

A. Requirements of Regulatory Agencies: Wherever a fire-resistance classification is shown or scheduled for unit masonry construction (4-hour, 3-hour and similar designations),provide masonry accessories complying with the requirements established by UL and other governing authorities.

B. Codes: Comply with the applicable requirements of the State of Rhode Island Official Compilation of Codes, Rules and Regulations for types of masonry accessories Work shown and specified.

C. Reference Standards: Comply with applicable provisions and recommendations of the following, except where otherwise shown or specified.

1. ASTM A 82, Cold-Drawn Steel Wire for Concrete Reinforcement.

2. ASTM A 153, Zinc-Coating (Hot Dip) on Iron and Steel Hardware.

3. ASTM A 615, Deformed and Plain Billet-Steel Bars for Concrete Reinforcement.

4. ASTM AA 663, Steel Bars, Carbon, Merchant Quality, Mechanical Properties.

5. ACI 315, "Manual of Standard Practice for Detailing Reinforced Concrete Structures."

6. UL, Design Numbers U901 through U908.

1.4 SUBMITTALS

A. Samples: Submit for approval the following:

1. 6-inch lengths of each item specified and one of each individual item.

2. Compliance with all other requirements is the exclusive responsibility of CONTRACTOR.

B. Shop Drawings: Submit for approval the following:

1. Copies of manufacturer's specifications and installation instructions for each masonry accessory required. Include data substantiating that materials comply with specified requirements, and where each masonry accessory shall be used in the Work.

2. Explain where each masonry accessory will be used in the Work and the intended spacing.

1.5 PRODUCT DELIVERY, STORAGE AND HANDLING

A. Delivery of Materials: Deliver accessories in original packages, plainly marked with identification of materials and manufacturer.

B. Storage of Materials: Store and cover materials to prevent corrosion and deterioration.

PART 2 PRODUCTS

2.1 MATERIALS

A. Continuous Horizontal Wire Reinforcing and Ties for Masonry: Provide the following unless otherwise shown:

1. General: Welded wire units prefabricated in straight lengths of not less than 10 feet, with matching corner "L" and intersection "T" units. Fabricate from cold-

drawn steel wire complying with ASTM A 82, with deformed continuous 9 gage side rods and plain 9 gage cross rods, with unit width of 1-1/2 to 2 inches less than thickness of wall or partition. All reinforcing and ties shall be hot dipped galvanized after fabrication with 1.5 ounces per square foot of zinc coating complying with ASTM A 153, Class B-1 and B-2 unless otherwise specified.

2. For single-wythe and multi-wythe masonry, use units fabricated as follows:

   a. Truss-type fabricated with one horizontal rode beneath each unit masonry shell wall and continuous diagonal cross-rods spaced not more than 16 inches on centers.

   b. Product and Manufacturer: Provide one of the following:

      1) Blok-Trus AA600 and 3-Wire Blok-Trus by AA Wire Products Company.

      2) Or equal.

B. Individual Wire Ties for Masonry: Provide the following where shown:

1. General: Fabricate from 3/16 inch cold-drawn steel wire complying with ASTM A 82, with 1.5 ounces per square foot of hot-dip coating complying with ASTM A 153, Class B-3 with unit width of 1-1/2 a to 2 inches less than thickness of wall or partition.

2. Where facing and back-up joints align use single-piece ties as follows:

   a. For use with hollow masonry units laid with cells vertical, provide 4-inch wide rectangular shaped ties.

   b. For use with solid masonry units or hollow units laid with cells horizontal, provide ties with ends bent to 90 degree angles to form hooks not less than 2-inches long.

   c. Product and Manufacturer: Provide one of the following:

      1) AA309 Wire or AA304 Rectangular Wire Tie by AA Wire Products Company.

3. Where facing and back-up joints do not align, use adjustable two-piece ties as follows:

a) For use with hollow masonry units laid with cells vertical, and with solid masonry units or hollow units laid with cells horizontal provide 4-inch wide adjustable rectangular shaped ties with lock bars welded across box ties and adjustable ties with ends bent to 90 degree angles to form box ties not less than 2-inches long. Eye-type units are not acceptable and shall not be approved by CONTRACTOR.

b) Product and Manufacturer: Provide one of the following:

1) AA301 Adjustable U-Bar and Rectangular Box Ties by AA Wire Products Company.

C. Anchoring Devices for Masonry: Provide the following unless otherwise shown:

1. General:

a. Unless otherwise specified all anchoring devices for masonry shall be hot dipped galvanized after fabrication with 1.5 ounces per square foot of zinc coating complying with ASTM A 153, Class B-1, B-2 and B-3.

b. Flexible Anchors: Whenever masonry abuts structural walls or framework provide flexible anchors which permit horizontal and vertical movement of masonry but provides lateral restraint.

2. For anchorage to concrete structure provide the following:

a. Two-piece anchors with 24 gage sheet metal dovetail and 16 gage rectangular corrugated tie 1-inch wide, sized to extend to within one inch of face of masonry.

b. Product and Manufacturer: Provide one of the following:

1) No. AA100 Dovetail and AA205 Anchors by AA Wire Products Company.

3. For anchorage to steel framework provide the following:

a. Two-piece anchors with 8-inch long channel slot fabricated from 11 gage steel and 16 gage rectangular corrugated 1-inch wide tie sections sized to extend within one inch of opposite face of masonry, to a depth of 12 inches abutting flanges, or between 1-1/2 inch and 2 inches less than width of masonry abutting web.

b. Product and Manufacturer: Provide one of the following:

1) No. AA209 Channel and AA210 Tie by AA Wire Products Company.

D. Miscellaneous Masonry Accessories: Provide the following where shown:

1. Reinforcing Bars:

a. Deformed carbon steel, ASTM A 615, Grade 60 for bars No. 3 to No. 18 except as otherwise shown.

b. Plain carbon steel, ASTM A 663, Grade 80 where No. 2 bars are shown or required.

c. Provide galvanized steel reinforcing bars complying with ASTM A 153, Class B-1, where shown.

2. Compressible Filler:

a. Use foamed polyurethane strip saturated with polybutylene waterproofing material. When compressed to 50 percent of its original volume, filler shall hold six feet of water hydrostatically,and 10 feet at 60 percent compression. Filler shall maintain its resiliency to allow for installation in temperatures as low as 40°F. Filler shall be waterproof when compressed to 50 percent of its original volume in temperatures from -40°F to +200°F. Elongation shall be at least 325 percent with a tensile strength of not less than 53 pounds per square inch. No migration of polybutylene compound in the polyurethane strip will be allowed.

b. Product and Manufacturer: Provide one of the following:

1) Polytite by Sandell Manufacturing Company.

2) Compriband by Secoa Corporation, Division of Phoenix Building Products, Incorporated.

3. Premolded Control Joint Strips: Solid polyvinyl chloride strips with a Shore A durometer hardness of 80 to 90, designed to fit standard sash block and maintain lateral stability in masonry wall, size and configuration shall be as specified.

a. Product and Manufacturer: Provide one of the following:

1) Blok-Tite AA2003 and AA2005 by AA Wire Products Company.

4. Sealants: Section 7J1, Calking and Sealants.

5. Cavity Fill Mesh: Provide hot dip galvanized 1/2-inch mesh hardware cloth, backed with asphalt impregnated cloth below. Install below all block courses that are to be filled with mortar.

2.2 FABRICATION

A. Weld-in-place all channel slots and other specified weld-on anchors at the shop. Field welding is not acceptable.

B. Coordinate location of all weld-on anchors and show on structural steel Shop Drawings included under Section 5A3, Structural Steel.

C. Weld anchor slots and other required accessories in place before shop priming of structural steel.

D. Prime all weld-on anchors and other accessories and passivate anchor coating as required and specified under Section 9L, Painting.

E. Shop-fabricate reinforcing bars which are shown or required to be bent or hooked. Comply with ACI 315 for the fabrication of reinforcing steel for unit masonry construction Work.

PART 3 EXECUTION

3.1 INSTALLATION

A. Refer to the following:

1. Section 04200, Unit Masonry Construction.

END OF SECTION 04150

SECTION 04200
UNIT MASONRY CONSTRUCTION

PART 1 GENERAL

1.1 DESCRIPTION

A. Providing openings in unit masonry construction to accommodate the Work under this and other Sections and building into the unit masonry construction all items such as sleeves, anchor bolts, inserts and all other items to be embedded in unit masonry construction for which placement is not specifically provided under other Sections.

B. Coordination:
   1. Review installation procedures under other Sections and coordinate the installation of items that must be installed with the unit masonry construction Work.
   2. Unit masonry construction Work advanced without built-in flashing and other built-in Work shall be removed and rebuilt at no additional expense to OWNER even if discovered after unit masonry construction Work has been completed.
   3. Coordinate the Work of other Sections to avoid delay of the unit masonry construction Work.

1.2 RELATED SECTIONS

1. Section 04100, Mortar.
2. Section 04150, Masonry Accessories.
3. Section 05500, Miscellaneous Metal Fabrications.
4. Section 06100, Rough Carpentry.

1.3 QUALITY ASSURANCE

A. Requirements of Regulatory Agencies: Wherever a fire-resistance classification is shown or scheduled for unit masonry construction Work (4-hour, 3-hour, and similar designations), comply with applicable requirements for materials and installation established by UL and other governing authorities.

B. Codes: Comply with the applicable requirements of the State of Rhode Island Official Compilation of Codes, Rules and Regulations for the types of unit masonry construction Work shown.

C. Construction Tolerances:

1. Variation from Plumb: For lines and surfaces of columns, walls and arises, do not exceed 1/4 inch in 10 feet, or 3/8 inch to a story height or 20 feet maximum, nor 1/2 inch in 40 feet or more. Except for external corners, expansion joints and other conspicuous lines, do not exceed 1/4 inch in any story or 20 feet maximum, nor 1/2 inch in 40 feet or more.

2. Variation from Level: For lines of exposed lintels, sills, parapets, horizontal grooves and other conspicuous lines,do not exceed 1/4 inch in any bay or 20 feet maximum, nor 3/4 inch in 40 feet or more.

3. Variation of Linear Building Line: For position shown and related portion of columns, walls and partitions, do not exceed 1/2 inch in any bay or 20 feet maximum, nor 3/4 inch in 40 feet or more.

4. Variation in Cross-Sectional Dimensions: For columns and thickness of walls, from dimensions shown, do not exceed minus 1/4 inch nor plus 1/2 inch.

D. Job Mock-up:

1. Prior to installation of unit masonry construction Work, but after ENGINEER's approval of samples, erect job mock-up using materials, pattern bond and joint tooling shown or specified for final Work. Provide special features as directed including finished opening 1 foot-4 inches by 1 foot-4 inches, finished end, and masonry control joint. Build mock-up at the site, in location approved by ENGINEER, of full required wall thickness and approximately 4 feet by 3 feet-4 inches, unless otherwise shown. Indicate the proposed range of color, texture and workmanship to be expected in the completed Work. Obtain ENGINEER's acceptance of visual qualities of the mock-up before start of unit masonry construction Work. Retain and protect mock-up during construction as a standard for judging completed unit masonry construction Work. Do not alter, move or destroy mock-up until given written permission by ENGINEER.

2. Build as many job mock-up panels as required to obtain ENGINEER'S acceptance of the Work.

3. Unit masonry construction Work which proceeds without an approved job mock-up panel shall be removed.

4. Masonry construction that does not meet the standards approved on the sample panel shall be removed and rebuilt as required by ENGINEER. Provide mock-up panel or the following:

a. Typical complete exterior wall including elastic masonry flashing.

b. Typical complete interior wall of glass unit masonry.

E. Preconstruction Conference:

1. Prior to the installation of unit masonry construction Work, CONTRACTOR shall schedule a preconstruction conference at the project site. Review foreseeable methods and procedures related to the unit masonry construction Work including, but not necessarily limited to, the following:

a. Project requirements, including Drawings, Specifications and other Contract Documents.

b. Structural concept.

c. Method of sequence of masonry construction.

d. Special masonry details.

e. Required submittals, both completed and yet to be completed.

f. Standard of workmanship.

g. Quality control requirements.

h. Job organization and availability of materials, tradesmen, equipment and facilities needed to make progress and avoid delays.

i. Masonry control and expansion joint location and materials.

j. Modular planning requirements.

k. Weather and forecasted weather conditions, and procedures for coping with unfavorable conditions.

l. Required inspection, testing and certifying procedures.

m. Regulations concerning building code compliance.

F. Reference Standards: Comply with applicable provisions and recommendations of the following, except as otherwise shown or specified.

1. ASTM C 67, Standard Methods of Sampling and Testing Brick.

2. Brick Institute of America, "Technical Notes on Brick and Tile Construction."

3. Brick Institute of America, Technical Bulletin 1A. "Construction and Protection Recommendations for Cold Weather Masonry Construction."

4. Brick Institute of America, Technical Notes on "Cleaning Clay Products Masonry."

5. National Concrete Masonry Association, "guide Specifications" and "Technical Bulletins."

1.4 SUBMITTALS

A. Shop Drawings: Submit for approval the following:

1. Complete layout of all masonry walls showing modular planning and all special shapes to be used in the Work. Show all details for each condition encountered in the Work. Provide plans and elevations drawn at 1/4 inch scale and details drawn at 1-1/2 inch scale. Show all items required to be built into unit masonry construction Work.

2. Masonry control joint locations and details.

3. Shop Drawings showing the location, extent and accurate configuration and profile of all items shown, specified and required by this and other sections to be built into the unit masonry construction Work as the Work progresses. Provide elevations drawn at 1/4 inch scale and all details drawn at 1-1/2 inch scale.

4. Shop Drawing for fabrication, bending, and placement of reinforcing bars. Show bar schedules, diagrams of bent bars, stirrup spacing, lateral ties and other arrangements and assemblies as required for fabrication and placement of reinforcing for unit masonry construction Work.

1.5 PRODUCT DELIVERY, STORAGE AND HANDLING

A. Delivery of Materials:

1. Deliver reinforcing to the site, bundled, tagged and marked. Use metal tags indicating size, lengths and other markings shown on approved Shop Drawings.

B. Storage of Materials:

1. Protect masonry materials during storage and construction with a properly erected shelter from wetting by rain, snow or ground water and from soilage or intermixture with earth or other materials.

2. Maintain temperatures in shelter so that masonry materials are above 20°F when laid.

C. Handling Materials:

1. Handle materials in a manner that minimizes chips, cracks, voids, discolorations or other defects which might be visible or cause staining in finished Work.

1.6 JOB CONDITIONS

A. Site Facilities: Supplemental heat sources as may be required should CONTRACTOR wish to continue unit masonry construction Work in cold weather are not available at the project site. The provision of all supplemental heat energy sources and equipment is the responsibility of CONTRACTOR.

B. Environmental Requirements:

1. Do not place any unit masonry construction Work when air temperature is below 28°F on a rising temperature or below 36°F on falling temperatures without temporary heated enclosures or without heating materials or other precautions necessary to prevent freezing as specified in 1.5.C below.

2. No frozen materials shall be used nor shall frozen unit masonry construction Work be built upon.

3. Remove and replace all unit masonry construction Work damaged by frost or freezing.

C. Protection:

1. Protect all unit masonry construction Work against freezing for at least 48 hours after being placed.

a. Mean Daily Air Temperature 40°F to 32°F: Protect unit masonry construction Work from rain or snow for 48 hours after installation.

b. Mean Daily Temperature 32°F to 25°F: Completely cover unit masonry construction Work for 48 hours after installation.

c. Mean Daily Temperature 25°F to 20°F: Completely cover unit masonry construction Work with insulating blankets for 48 hours.

d. Mean Daily Temperature 20°F and Below: Maintain unit masonry construction Work above 32°F for 48 hours by enclosure and supplementary heat.

2. Protect partially completed masonry against rapid heat loss and from water entering masonry, when Work is not in progress, by covering top of walls with strong, waterproof, nonstaining membrane. Extend membrane at least 2 feet down both sides of walls and secure in place using wall cover clamps spaced at intervals of 4 feet-0 inches and at each end and joint of covering.

3. Do not apply uniform floor or roof loading for at least three days after completing masonry columns or walls.

4. Do not apply concentrated loads for at least seven days after completing masonry columns or walls.

D. Cold Weather Unit Masonry Construction Work:

1. All mortar for use in unit masonry construction Work when the mean daily temperature is below 40°F shall be portland cement-lime-sand mortars using high early strength portland cement.

2. Clay or shale unit masonry with suction in excess of 20 grams per 30 square inches shall be sprinkled with heated water just prior to laying. Provide water temperature above 70°F when units are above 32°F. Water temperature shall be above 120°F when temperature of units are below 32°F.

3. Air Temperature 40°F to 32°F: Heat sand or mixing water to minimum of 70°F and maximum of 160°F.

4. Air Temperature 32°F to 25°F: Heat sand and mixing water to minimum of 70°F and maximum of 160°F.

5. Air Temperature 25°F to 20°F: Heat sand and mixing water to minimum of 70°F and maximum of 160°F. Provide heat on both sides of wall under construction. Employ wind breakers when wind is in excess of 15 mph.

6. Air Temperature 20°F and Below: Heat sand and mixing water to minimum of 70°F and maximum of 160°F. Provide enclosure and auxiliary heat to maintain air temperature above 32°F. Temperature of masonry units when laid shall not

be less than 20°F.

E. Hot Weather Unit Masonry Construction Work: Protect unit masonry construction Work by methods acceptable to ENGINEER, from direct exposure to wind and sun when the surrounding air temperature is 99°F in the shade with relative humidity less than 50 percent.

PART 2 PRODUCTS

2.1 MATERIALS

a. Refer to the following Sections for required masonry materials.

1. Section 04100, Mortar.

2. Section 04150, Masonry Accessories.

PART 3 EXECUTION

3.1 INSPECTION

A. CONTRACTOR and his installer shall examine areas and conditions under which unit masonry construction Work is to be installed, and notify ENGINEER of unsatisfactory conditions. Do not proceed with the Work until unsatisfactory conditions have been corrected in a manner acceptable to ENGINEER.

3.2 PREPARATION

A. Wetting of Masonry Units:

1. Use wetting methods which ensure that each masonry unit is nearly saturated but surface dry when laid.

2. Except for absorbent units specified to be wetted, lay masonry units dry. Do not wet concrete masonry units.

B. Cleaning Reinforcement: Before being placed, remove all loose rust, mill scale, earth, ice and other contamination from reinforcement. Do not use reinforcing bars with kinks or bends not shown on Drawings or approved Shop Drawings, or bars with reduced cross-section due to excessive rusting or other causes.

3.3 INSTALLATION, GENERAL

A. Thickness: Build walls, floors and other unit masonry construction Work to the full thickness shown. Build single-wythe walls to the actual thickness of the masonry units, using units of nominal thickness shown or specified.

B. Build chases and recesses as shown or required by others. Refer to Paragraph 1.1.B. herein for the requirements of coordination with others. Provide not less than 8 inches of masonry between chase or recess and jamb of openings, and between adjacent chases and recesses.

C. Leave openings for equipment, piping, ducts, and other items to be installed subsequent to starting of masonry Work. After installation of said items, complete unit masonry construction Work to match Work immediately adjacent to openings.

D. Cut masonry units using motor driven saws to provide clean, sharp, unchipped edges. Cut units as required to provide pattern shown and to fit adjoining Work neatly. Use full size units without cutting wherever possible.

3.4 LAYING MASONRY WALLS

A. General:

1. Mortar Types: Unless otherwise indicated, use mortar as specified in Section 4A, Mortar, and as follows:

   a. For all wythes of exterior wall construction Work use Type S mortar.

   b. For interior wall construction Work, use Type N mortar.

   c. Use grout fill for structural requirements and for grouting reinforcing steel in unit masonry construction Work.

   d. Do not use mortar which has begun to set or if more than 1/2 hour has elapsed since initial mixing. Retemper mortar during the 1/2-hour period only as required to restore workability.

2. Layout walls in advance for accurate spacing of surface pattern bond with uniform joint widths and to properly locate openings, masonry control joints, returns and offsets. Avoid the use of less than half size units at corners, jambs and wherever possible at other locations.

3. Lay up walls plumb and true to comply with specified tolerances, with courses level, accurately spaced and coordinated with other Work.

4. Pattern Bond:

   a. Lay all concrete unit masonry construction Work in a running bond pattern with vertical joints centered on units in courses above and below.

   b. Bond and interlock each course of each wythe at corners.

   c. Do not use units with less than 8-inch horizontal face dimensions at corners or jambs.

5. Color and Texture:

   a. Lay all concrete unit masonry construction Work using colored or white portland cement mortar.

B. Mortar Bedding and Jointing:

1. Lay solid masonry units with completely filled bed and head joint; butter ends with sufficient mortar to fill heat joints and shove into place. Do not slush head joints.

2. Lay hollow concrete masonry units with full mortar coverage on horizontal and vertical face shells. Bed webs in mortar in starting course of piers, columns and pilasters, and where adjacent to cells or cavities to be reinforced or filled with concrete or grout.

3. Maintain joint widths shown except for minor variations required to maintain pattern bond alignment. If not shown lay concrete unit masonry walls with 3/8-inch joint.

4. Cut joints flush for masonry walls that are to be concealed or to be covered by other materials, except paint, unless otherwise shown.

5. Tool exposed joints, when mortar is "thumbprint" hard, slightly concave. Rake out mortar in preparation for application of calking or sealants where required.

6. Concave-tool exterior joints below grade.

7. Remove masonry units disturbed after laying; clean and reset in fresh mortar. Do not pound corners at jambs to fit stretcher units which have been set in position.

If adjustments are required, remove units, clean off mortar and reset in fresh mortar.

C. Collar Joints: Fill the vertical space between wythes solidly with mortar by parging the in-place wythe and shoving units into the parging, for the following unit masonry construction Work:

1. All multi-wythe concrete unit masonry and unfilled ground face concrete unit masonry walls.

D. Stopping and Resuming Work: Rake back one unit masonry length in each course; do not tooth. Clean exposed surfaces of set masonry, wet units lightly, if required, and remove loose masonry units and mortar prior to laying new masonry.

E. Built-in Work:

1. As the Work progresses, build in items shown, specified or required by others. Refer to paragraph 1.1.B. herein for the requirements of coordination with others. Fill cores in one block width solidly with masonry around built-in items.

2. Fill space between hollow metal frames and masonry solidly with mortar.

3. Where built-in items are to be embedded in cores of hollow masonry units, place a layer of cavity fill mesh in the joint below and rod mortar or grout into core.

4. Where required by governing code requirements and to meet thickness to height ratio and to provide required fire-resistance, fill all cells of unit masonry construction solid with grout.

F. Structural Bonding of Multi-Wythe Masonry:

1. Use continuous reinforcing embedded in horizontal mortar joints for bond tie between wythes as specified herein.

2. Corners: Provide interlocking masonry unit bond in each course at corners, unless otherwise shown.

   a. For horizontally reinforced masonry, provide continuity at corners with prefabricated "L" units as specified herein, in addition to masonry bonding.

3. Intersecting and Abutting Walls: Unless vertical expansion or masonry control joints are shown at juncture, provide same type of bonding specified for structural

bonding between wythes and space as follows:

a. Provide masonry bond in alternate courses.

b. Provide individual metal ties at not more than 24 inches on centers vertically, unless shown at closer spacing.

c. Provide continuity with horizontal joint reinforcing using prefabricated "T" and "L" units.

G. Non-Load-Bearing Partitions Wythes:

1. Build full height of story to underside of structure above, unless otherwise shown.

2. Tie non-load-bearing partitions at top and sides with masonry anchors at terminations. Build in end blocks to facilitate placing compressible filler. Insert compressible filler, specified in Section 4B, Masonry Accessories in all horizontal and vertical joints where non-load-bearing masonry terminates. Insert filler 3/4 inches from both faces of masonry. Use filler four times as thick as the widest part of the joint. Thickness of filler shall be a minimum of 1.5 times the compressed thickness. Compress filler to less than thickness of joint and insert. At splices, overlap strips by 3 inches and compress ends to form tight joint. Finish with backer rod and sealant.

H. Horizontal Joint Reinforcing:

1. Provide continuous horizontal joint reinforcing as shown and specified. Refer to Section 4B, Masonry Accessories, for type of reinforcing units required. Fully embed longitudinal side rods in mortar for their entire length with a minimum cover of 5/8 inch on exterior side of walls and 1/2 inch at other locations. Lap reinforcement a minimum of 6 inches at ends of units. Do not bridge masonry control joints and building expansion joints with reinforcing.

2. Reinforce all walls with continuous horizontal joint reinforcing unless specifically noted or specified to be omitted.

3. Provide continuity at corners and wall intersections by use of prefabricated "L" and "T" sections. Cut and bend units in accordance with manufacturer's written instructions for continuity at returns, offsets, pipe enclosures and other special conditions.

4. Space continuous horizontal reinforcing as follows:

a. For solid multi-wythe walls, where continuous horizontal reinforcing also acts as structural bond or tie between wythes, space reinforcing as required by code but not more than 16 inches on centers vertically.

b. For single wythe walls, space reinforcing at 16 inches on center vertically.

5. Reinforce masonry openings greater than 12 inches wide, with horizontal joint reinforcing placed in two horizontal joints approximately 8 inches apart, immediately above the lintel and immediately below the sill. Extend reinforcing a minimum of 24 inches beyond jambs of the opening.

6. In addition to wall reinforcing, provide additional reinforcing at openings as required to comply with the above.

I. Structural Reinforced Unit Masonry Construction:

1. Shape and dimension reinforcement as shown and are required by governing codes.

2. Position reinforcing accurately at the spacing shown. Support and secure vertical bars against displacement.

3. Where vertical bars are shown in close proximity, provide a clear distance between bars of not less than the nominal bar diameter or 1 inch, whichever is greater.

4. For columns, piers and pilasters, provide a clear distance between vertical bars as shown, but not less than 1-1/2 times the nominal bar diameter or 1-1/2 inches, whichever is greater. Provide lateral ties.

5. Provide lapped splices with reinforcing steel placed in contact and wire tied. Provide minimum lap required by governing code unless more stringent requirements are shown. Do not splice reinforcement at points other than shown or as approved on Shop Drawings.

J. Grouting Structural Reinforced Unit Masonry Construction:

1. Limit extent of masonry construction to sections which do not exceed the maximum pour requirements specified. Provide temporary dams or barriers to control horizontal flow of grout at ends of wall sections. Build dams full height of grout pour. If masonry units are used, do not bond into permanent masonry wythes. Remove temporary dams after completion of grout pour.

2. Use fine grout for filling spaces less than 4 inches in both horizontal directions. Use coarse grout for filling spaces 4 inches or larger in both horizontal directions.

3. For spaces 10 inches and larger use concrete fill.

4. Low-Life Grouting:

   a. Use low-lift grouting techniques using fine grout mix for the following:

      1) Two-wythe walls with grout space of 2-inches or less in width.

      2) Multi-wythe walls.

      3) At CONTRACTOR'S option, low-lift grouting technique may be used for structural reinforced unit masonry construction Work with grout spaces wider than 2 inches, except use coarse grout mix and place in lifts not to exceed 8 inches in height.

   b. Grout spaces less than 2 inches in width at intervals not to exceed 24 inches in lifts of 6 to 8 inches.

   c. Construct low-lift structural reinforced unit masonry construction Work by placing reinforcing, laying masonry units and pouring grout as the Work progresses.

   d. Place vertical reinforcing bars and supports prior to laying of masonry units. Extend above elevation of maximum pour height as required to allow for splicing. Horizontal reinforcing bars may be placed progressively with laying of masonry units.

   e. Limit grout pours as required to prevent displacement of masonry by grout pressures (blowout), but do not exceed 12 inch pour height.

   f. Lay masonry units prior to each grout pour, but do not construct more than 12 inches above maximum grout pour height in one exterior wythe and 4 inches above in other exterior wythe. Provide metal wall ties if required to prevent blowouts.

   g. Pour grout using container with spout and consolidate immediately by rodding or puddling; do not use trowels. Place grout continuously; do not interrupt pouring of grout for more than one hour. If poured in lifts, place from center-to-center of masonry courses. Terminate pour 1-1/2 inches below top of highest course in pour.

K. Anchoring Masonry Work:

1. Provide anchoring devices of the type shown and as specified under Section 4B, Masonry Accessories. If not shown or specified, provide standard type for facing and back-up involved.

2. Anchor masonry to structural members where masonry abuts or faces such members to comply with the following:

   a. Provide an open space not less than 1/2 inch in width between masonry and structural member, unless otherwise shown. Keep open space free of mortar or other rigid materials.

   b. Anchor masonry to structural members with metal ties embedded in masonry joints and attached to structure. Provide anchors with flexible tie sections, unless otherwise shown.

   c. Space anchors as shown, but not more than 24 inches on center vertically and 36 inches on center horizontally.

   d. Provide end blocks where masonry abuts structural support to facilitate installation of compressible filler, fire safing insulation, backer rod and sealant.

3. Anchor single wythe masonry veneer to backing with metal ties as follows:

   a. Anchor veneer to structural members with metal anchors embedded in masonry joints and attached to structure. Provide anchors with flexible tie section, unless otherwise shown.

   b. Anchor veneer to concrete back up with dovetail anchors.

L. Masonry Control Joints:

1. Provide vertical control joints in masonry where shown. Build in related items as the unit masonry construction Work progresses. Rake out mortar in preparation for application of calking and sealants. Refer to Section 7J1, Calking and Sealants.

2. Provide masonry control joints consisting of items specified under Section 4B, Masonry Accessories, where masonry control joints are shown.

a. Build in compressible fillers where shown. Install in accordance with manufacturer's written instructions.

b. Build in factory premolded control joint strips into masonry. Build in sash block and premolded control joint strips as the Work progresses.

c. Provide end blocks where masonry partitions abut structure to facilitate installation of compressible filler, fire safing insulation, backer rod and sealant.

3. Masonry Control Joint Spacing: Locate masonry control joints as shown.

M. Lintels and Bond Beams:

1. Provide steel lintels where shown and as specified in Section 5E3, Miscellaneous Metal Fabrications.

2. Provide masonry lintels and bond beams where shown and wherever openings of 16 inches or more are shown without structural steel lintels. Provide formed in place masonry lintels and bond beams. Temporarily support formed-in-place lintels and bond beams.

a. Unless otherwise shown, provide one horizontal number six deformed reinforcing bar for each 4 inches of wall thickness.

b. For hollow masonry unit walls, use specially formed "U" shaped lintel and bond beam units with reinforcing bars placed as shown, filled with grout as specified in Section 4A, Mortar.

3. Provide minimum bearing at each jamb, of 4 inches for openings less than 6 feet-0 inches wide, and 8 inches for wider openings.

4. On concrete unit masonry walls where pattern bond remains visually exposed, increase minimum bearing of masonry lintels to maintain joint pattern of wall and install so as to be indistinguishable from surrounding masonry.

N. Flashing of Masonry Work:

1. Provide concealed flashings in masonry Work as shown. Refer to Section 7H1, Flashing and Trim. Prepare masonry surfaces smooth and free from projections which might puncture flashing. Place through wall flashing on bed of mortar and cover with mortar. Seal flashing penetrations with mastic before covering with mortar. Terminate flashing 1/2 inch from face of wall, unless otherwise shown.

3.5 REPAIR, POINTING AND CLEANING

A. Remove and replace masonry units which are loose, chipped, broken, stained or otherwise damaged, or if units do not match adjoining units as intended. Provide anew units to match adjoining units and install in fresh mortar or grout, pointed to eliminate evidence of replacement.

B. Pointing Concrete Unit Masonry: During the tooling of joints, enlarge any voids or holes, except weep holes, and completely fill with mortar. Point up all joints at corners, openings and adjacent Work to provide a neat, uniform appearance, properly prepared for application of sealant compounds.

C. Cleaning Exposed, Unglazed Masonry Surfaces:

1. Wipe off excess mortar as the Work progresses. Dry brush at the end of each day's work.

2. Final Cleaning: After mortar is thoroughly set and cured, clean sample wall area of approximately 20 square feet as described below. Obtain ENGINEER'S acceptance of sample cleaning before proceeding to clean remainder of masonry work.

   a. Dry clean to remove large particles of mortar using wood paddles and scrapers. Use chisel or wire brush if required.

   b. Presoak wall by saturating with water and flush off loose mortar and dirt.

   c. Comply with the requirements and recommendations for "Cleaning Clay Products Masonry" of the Technical Notes on Brick and Tile Construction by Brick Institute of America for the type of masonry and conditions involved in the Work.

   d. Apply acid type cleaners in compliance with manufacturer's instructions.

   e. Protect other Work from acid solutions and cleaning operations.

D. Protection:

1. Protect the unit masonry construction Work from deterioration, discoloration or damage during subsequent construction operations. See Section 06100, Rough Carpentry.

END OF SECTION 04200

SECTION 05120
STRUCTURAL STEEL

PART 1 GENERAL

1.1 SECTION INCLUDES

A. Furnish all labor, materials, equipment, and incidentals required to provide structural steel, including surface preparation and shop priming.

1.2 QUALITY ASSURANCE

A. Reference Standards: Comply with applicable provisions and recommendations of the following except as otherwise shown or specified.

1. AISC Code of Standard Practice for Steel Buildings and Bridges.

2. AISC Specifications for Structural Steel Buildings including Commentary".

3. AWS D1.1, Structural Welding Code.

1.3 SUBMITTALS

A. Shop Drawings:

1. Submit for approval Shop Drawings including complete details and schedules for fabrication and shop assembly of members and details, schedules, procedures and diagrams showing the sequence of erection.

PART 2 - PRODUCTS

2.1 MATERIALS

A. Rolled Steel Plates, Shapes and Bars: ASTM A 36, except where other type steel is shown.

B. Cold-Formed steel Tubing: ASTM A 500, Grade B.

C. Steel Pipe: ASTM A 53, Type E or S, Grade B.

D. Fasteners: High-strength bolts and nuts, ASTM A 325 or A 490; unfinished bolts and nuts, ASTM A 307, Grade A.

E. Electrodes for Welding: E70XX complying with AWS D1.1, Design of New Buildings, Section 8.

F. Shop Paint: Included herein but as specified in Section 9L.

2.2 FABRICATION

A. Shop Fabrication and Assembly:

1. General:

a. Fabricate and assemble structural assemblies in the shop to the greatest extent possible. Fabricate items of structural steel in accordance with AISC, Manual of Steel Construction, and as shown on the Shop Drawings.

b. Provisions for Other Work: Fabricate structural steel members to provide holes for securing other work and for passage of other work through steel framing as indicated.

B. Connections:

1. Shop Connections:

a. Unless otherwise shown, shop connections may be welded or high strength bolted. Unless shown otherwise, all welds shall be 1/4-inch minimum.

b. Wherever reaction values of a beam are not shown, the connections shall be designed to support the total uniform load capacity tabulated in the AISC tables for allowable loads on beams for the given shape, span, and steel specified for the beam in question.

2. Field Connections:

a. All field connections unless otherwise specified below or noted shall be made with high strength bolts, and shall be bearing type connections.

C. Columns: Columns shall have milled bearing surfaces at the base and at all splice lines.

PART 3 EXECUTION

3.1 INSPECTION

A. CONTRACTOR and his erector shall examine areas and conditions under which structural steel Work is to be installed, and notify ENGINEER of conditions detrimental to proper and timely completion of Work. Do not proceed with Work until unsatisfactory conditions have been corrected in a manner acceptable to ENGINEER.

3.2 ERECTION

A. General: Comply with the AISC Specifications and Code of Standard Practice, and as herein specified.

B. Anchor Bolts:

1. Furnish anchor bolts and other connectors required for securing structural steel to foundations and other in-place Work.

2. Furnish templates and other devices as necessary for presetting bolts and other anchors to accurate locations.

C. Setting Bases and Bearing Plates:

1. Clean concrete and masonry bearing surfaces of bond-reducing materials and roughen to improve bond to surfaces. Clean the bottom surface of base and bearing plates.

2. Set loose and attached base plates and bearing plates for structural members on steel wedges and grout.

D. Field Assembly: Set structural frames accurately to the lines and elevations indicated. Level and plumb individual members of the structure within tolerances as specified in AISC Manual.

E. Touch-Up Painting:

1. Comply with all requirements of touch-up painting in Section 9L.

END OF SECTION 05120

SECTION 05500
MISCELLANEOUS METAL FABRICATIONS

PART 1 GENERAL

1.1 SECTION INCLUDES

A. Furnish and install all miscellaneous metal fabrications Work, including items fabricated from iron, steel and aluminum shapes, plates, bars, castings and extrusions, which are not a part of other metal systems covered by other Sections of these Specifications.

B. The types of miscellaneous metal fabrications Work required includes, but not limited to, the following:

a. Ladders.

b. Ladder safety cages.

c. Fall prevention system.

d. Expansion shield fasteners.

e. Miscellaneous framing and supports.

f. Truck bollards.

g. Miscellaneous accessories and fasteners.

1.2 RELATED SECTIONS

A. Section 03300, Concrete.

B. Section 09900, Painting.

1.3 QUALITY ASSURANCE

A. Reference Standards: Comply with the applicable provisions and recommendations of the following, except as otherwise shown or specified:

1. ASTM A 36, Structural Steel.

2. ASTM A 123, Zinc (Hot-Galvanized) Coatings on Products Fabricated from Rolled, Pressed, and Forged Steel Shapes, Plates, Bars, and Strip.

3. ASTM A 153, Zinc Coating (Hot-Dip) on Iron and Steel Hardware.

4. ASTM A 240, Heat Resisting Chromium and Chromium-Nickel Stainless Steel Plate, Sheet, and Strip for Fusion-Welded Unfired Pressure Vessels.

5. ASTM A 320, Alloy Steel Bolting Material for Low Temperature Service.

6. ASTM A 386, Zinc Coating (Hot-Dip) on Assembled Steel Products.

7. ASTM B 209, Aluminum-Alloy Sheet and Plate.

8. ASTM B 211, Aluminum-Alloy Bars, Rods and Wire.

9. ASTM B 221, Aluminum-Alloy Extruded Bars, Rods, Wire, Shapes and Tubes.

10. ANSI A14.3, Safety Requirements for Fixed Ladders.

11. AWS D1.1, Structural Welding Code.

12. AISI Standards for Stainless Steel.

B. Design Criteria: The size and spacing of expansion bolts, anchor bolts, cast-in-place inserts and similar items shown or specified shall be considered the minimum acceptable size. Final selection of these items shall be based upon the actual design load times a minimum safety factor of four. Where the size and spacing of expansion bolts, anchor bolts, cast-in-place inserts and similar items are not shown or are not specified, the CONTRACTOR shall provide such items of sufficient size, length, load carrying capacity and spacing required to carry the design load times a minimum safety factor of four. Provide non-corrodible materials for all such items.

C. Field Measurements: Take field measurements where required prior to preparation of Shop Drawings and fabrication to ensure proper fitting of the Work.

D. Shop Assembly: Preassemble items in the shop to the greatest extent possible, so as to minimize field splicing and assembly of units at the project site. Disassemble units only to the extent necessary for shipping and handling limitations. Clearly mark units for reassembly and coordinated installation.

1.4 SUBMITTALS

A. Submit for approval sets of representative samples of materials including nosings, rungs and other finished products as requested by the ENGINEER. Review will be for color, texture, style, and finish only. Compliance with all other requirements is the exclusive responsibility of the CONTRACTOR.

B. Submit for approval the following:

1. Shop Drawings for the fabrication and erection of all assemblies of miscellaneous metal fabrications Work. Include plans, elevations, and details of sections and connections. Show anchorage and accessory items. Include setting drawings and templates for location and installation of miscellaneous metal fabrications items and anchorage devices.
2. Copies of manufacturer's specifications, load tables, dimension diagrams, anchor details, and installation instructions for products to be used in miscellaneous metal fabrications Work.

PART 2 PRODUCTS

2.1 MATERIALS

A. Stainless Steel Sheet and Plate: ASTM A 240.

B. Steel Plates, Shapes and Bars: ASTM A 36.

C. Aluminum:

1. Alloy and Temper: Provide alloy and temper as shown or specified, or as otherwise recommended by the aluminum producer or finisher.

2. Extruded Shapes and Tubes: ASTM B 221.

3. Plate and Sheet: ASTM B 209.

4. Bars, Rods and Wire: ASTM B 211.

5. Finish: Provide Architectural Class I anodized finish AA-M32C22A41 Clear as specified in the NAAMM Manual.

D. Stainless Steel Fasteners and Fittings: ASTM A 320.

E. Zinc Coated Hardware: ASTM A 153.

2.2 MISCELLANEOUS METAL ITEMS

A. Aluminum Ladders:

1. Fabricate ladders for the locations shown, with dimensions, spacings, details and anchorages as shown and specified. Comply with the requirements of ANSI A14.3, except as otherwise shown or specified.

   a. Unless otherwise shown, provide aluminum pipe, ASTM B 429, 554, 1.90-inch outside diameter, Schedule 80 side rails spaced 18 inches apart, minimum.

   b. Provide solid aluminum square rungs, spaced 12 inches on centers, maximum, with non-slip surface on the top of each rung.

2. Fit rungs in centerline of side rails, plug weld and grind smooth on outer rail faces.

3. Support each ladder at top and bottom and at intermediate points spaced not more than 5 feet on centers. Use welded or bolted brackets, designed for adequate support and anchorage, and to hold the ladder clear of the wall surface with a minimum of 7 inches clearance from wall to centerline of rungs. Extend rails 42 inches above top rung, and return rails to wall or structure unless other secure handholds are provided. If the adjacent structure does not extend above the top rung, gooseneck the extended rails back to the structure to provide secure ladder access.

B. Aluminum Ladder Safety Cages:

1. Fabricate ladder safety cages from flat bars, assembled by welding. Unless otherwise shown, provide 1/2-inch by 3-inch top, bottom and intermediate hoops spaced not more than 5 feet on centers; and 3/8-inch by 2-inch vertical bars, secured to each hoop. Space vertical bars approximately 9 inches on centers. Fasten assembled safety cage to ladder rails and adjacent construction as shown. Grind all welds, sharp edges and projections smooth.

2. Comply with the requirements of ANSI A14.3.

C. Fall Prevention System: All ladders shall be provided with a fall prevention system. The system shall meet OSHA standards.

1. The system shall consist of curved and straight custom lengths of Type 316 stainless steel notched carrier rails and rung clamps permanently attached to

the ladder to which a harness belt is attached. Spacing of ladder attachments shall be provided as recommended by the manufacturer.

2. Provide each ladder with one of each of the following in addition to rail and support assemblies:

   a. Cast manganese bronze locking sleeve with locking pawl filled with fire stainless steel sealed roller bearings in covered housing.

   b. Polyester nylon and leather safety belt recommended by the system manufacturer for full feature compatibility.

   c. Removable stainless steel extension system consisting of rail, stainless steel tie-down rod and mandril.

3. System manufacturer shall review each ladder to determine desirability of detachment sections. Inform Engineer of recommendations.

4. Product and Manufacturer: Provide fall prevention systems as manufactured by one of the following:

   a. Saf-T-Climb System by North Consumer Products, A division of Siebe North Incorporated.

   b. Or equal.

Loose Steel Lintels: Provide loose hot dipped galvanized structural steel lintels for openings and recesses in masonry walls and partitions as shown. Where not shown provide loose steel lintels as specified. Weld adjoining members together to form a single unit and grind welds smooth where exposed in the finished Work. Provide not less than 4 inches bearing at each side of openings, unless otherwise specified. Unless otherwise shown size loose lintels as follows:

Clear Span (Max)	Exterior Angle	Interior Angles
-0"	3-1/2-inches x 3-1/2-inches x 5/16-inches	(2) 3-1/2-inches x 3-1/2-inches x 5/16-inches
6'-0"	4-inches x 3-1/2-inches x S/16-inches	(2) 4-inches x 3-1/2-inches x 5/16-inches
8'-0"	5-inches x 3-1/2-inches x S/16-inches	(2) 5-inches x 3-1/2-inches x S/16-inches
Greater than 8'-0"	Submit calculations prepared, signed end stamped with the seal of a greater than 8'-0" Registered Professional Engineer licensed to practice in the State of Rhode Island and recognized as an expert in the required Work.	

E. Shelf Angles: Provide galvanized steel shelf angles of sizes shown for attachment to concrete and masonry construction. Provide horizontal slotted holes to receive 3/4-inch bolts, spaced not more than 6 inches from ends and not more than 2 foot-6 inches on centers. Weld adjoining members together to form a single unit and grind welds smooth where exposed in the finished Work.

F. Miscellaneous Framing and Supports:

1. Provide miscellaneous metal framing, supports and other metal items required which are not a part of the structural steel framework and are required to complete the Work.

2. Fabricate miscellaneous units to the sizes, shapes and profiles shown or, if not shown, of the required dimensions to receive adjacent grating, plates, tanks, doors, or other work to be retained by the framing. Except as otherwise shown, fabricate from structural shapes, plates, and bars, of all welded construction using mitered corners, welded brackets and splice plates and a minimum number of joints for field connection. Cut, drill and tap units to receive hardware and similar items to be anchored to the Work.

3. Equip units with integrally welded anchors for casting into concrete or building into masonry. Furnish inserts if units must be installed after concrete is placed.

a. Except as otherwise shown, space anchors, 24 inches on centers, and provide units and equivalent of 1-1/4-inch by 1-1/4-inch by 8-inch strips.

b. Galvanize all exterior miscellaneous framing and supports.

c. Galvanize interior miscellaneous framing and supports where shown.

G. Alternating tread cross-over ladder and platform:

1. Provide stair 24-inches wide and platform 24-inches square fabricated from AAF356F cast alloy aluminum with all walking surfaces cast with skid resistant patterns as follows:

a. Provide stairs 68 degrees to horizontal.

b. Fabricate to clear containment wall.

c. All castings MIG welded.

d. Provide cast aluminum foot divider integral with platforms.

e. Railings shall be contoured for body guidance and underarm support and be fabricated of 6061-T4 aluminum.

f. Central stringer shall be aluminum 6063-T52.

g. All aluminum shall be A41 clear anodized.

2. Product and Manufacturer: Provide one of the following:

a. Alternating tread cross-over aluminum ladder and associated platforms by Lapeyre Stair Incorporated.

H. Truck Bollards: Provide 8-inch diameter, double extra strong galvanized steel pipe, 3 foot-4 inches above grade, 3 feet below grade. Fill with concrete and mound top.

I. Primer Paint: Unless otherwise shown or specified, prepare surfaces and prime steel items as required under Section 09900, Painting.

J. Galvanizing: All galvanizing of fabricated steel items shall comply with the requirements of ASTM A 123.

K. Aluminum Finish: Provide a natural mill finish for all aluminum Work unless otherwise shown or specified.

L. Expansion Shield Fasteners: Unless otherwise specified by materials or equipment manufacturer, expansion anchors shall conform to the following:

1. For items not anchored into concrete or masonry with integral anchors welded or bolted to the item, provide fasteners for anchoring made of stainless steel as specified.

2. Install fastener in accordance with manufacturer's recommendations.

3. 1/2-inch diameter, 2-inches embedment length minimum.

4. Power driven pin" and stud" type fasteners will not be permitted.

5. Product and Manufacturer: Provide one of the following:

a. Molly Parabolts by USM Corporation.

b. Kwik-Bolt by Hilti Corporation.

2.3 SURFACE PREPARATION AND SHOP PAINTING

A. Surface preparation and shop painting is required for all ferrous metals, equipment and accessories. Stainless steel shall not be painted.

B. All ferrous metal surfaces shall be cleaned and provided with surface preparation and two coats of priming paint in accordance with the applicable requirements of Section 09900, Painting. All prime coat materials shall be compatible with the finish coat materials to be furnished under Section 9L, Painting.

PART 3 EXECUTION

3.1 FABRICATION, GENERAL

A. Use materials of the size and thicknesses shown. If not shown, usethe required size and thickness to produce adequate strength and durability in the finished product for the intended use. Work to the dimensions shown or accepted on Shop Drawings using proven details of fabrication and support. Use the type of materials shown or specified for the various components of Work.

B. Form exposed Work true to line and level with accurate angles and surfaces and straight sharp edges. Ease exposed edges to a radius of approximately 1/32 inch unless otherwise shown or specified. Form bent metal corners to the smallest radius possible without causing grain separation or otherwise impairing the Work.

C. Weld corners and seams continuously and in accordance with the recommendation of AWS. Grind exposed welds smooth and flush to match and blend with adjoining surfaces. Discoloration of finished surfaces of materials not to be painted will not be acceptable.

D. Form exposed connections with hairline joints which are flush and smooth using concealed fasteners wherever possible. Use exposed fasteners of the type shown or if not shown, use flathead (countersunk) screws or bolts.

E. Cut, reinforce, drill, and tap miscellaneous metal fabrications Work as may be required to receive finish hardware and similar items of Work.

F. Use hot-rolled steel bars for Work fabricated from bar stock unless Work is otherwise shown or specified to be fabricated from cold-finished or cold-rolled stock.

3.2 INSTALLATION

A. Set miscellaneous metal fabrications accurately in location, alignment and elevation, plumb, level, true and free of rack, measured from established lines and levels. Brace temporarily or anchor temporarily in formwork where fabrications are to be built into concrete, masonry or similar construction.

B. Anchor securely as shown or as required for the intended use, using concealed anchors wherever possible. Comply with the following:

1. Drilling equipment used and installation of expansion anchors shall be in accordance with manufacturer's instructions.

2. Assure that embedded items are protected from damage and are not filled in with concrete.

3. Expansion anchors may be used for hanging or supporting 2-inch diameter pipes and smaller. Expansion anchors shall not be used for larger pipe unless otherwise shown or approved by ENGINEER. 4. Use concrete inserts for pipe hangers and supports for the pipe size and loading recommended by the insert manufacturer.

   a. Minimum embedment depth in concrete: 5 diameters.

   b. Minimum anchor spacing on centers: 10 diameters.

c. Minimum distance to edge of concrete: 5 diameters.

d. Increase dimensions above if required to develop the required anchor load capacity.

C. Fit exposed connections accurately together to form tight hairline joints. Weld steel connections which are not to be left as exposed joints, but cannot be shop welded because of shipping size limitations. Grind steel joints smooth and touch up shop paint coat. Do not weld, cut or abrade the surfaces of exterior units which have been hot-dip galvanized after fabrication, and are intended for bolted or screwed field connections.

D. Protection of Aluminum from Dissimilar Materials: Using approved washers, strips or sheets of felt, and coating specified in Section 09900, Painting, protect all surfaces of aluminum from contact with dissimilar materials such as concrete, masonry, steel, nonferrous metals, etc.

END OF SECTION 05500

SECTION 05505
ANCHOR BOLTS, EXPANSION ANCHORS AND CONCRETE INSERTS

PART 1 - GENERAL

1.1 SECTION INCLUDES

A. Furnish and install anchor bolts, expansion anchors and concrete inserts.

B. This Section includes all bolts, anchors, toggles and inserts required for the Work but not specified under other Sections.

C. The types of work using the bolts, anchors, toggles and inserts include, but are not limited to the following:

1. Hangers and brackets.
2. Equipment.
3. Piping.
4. Tanks.
5. Grating and floor plate.
6. Electrical, Plumbing and HVAC Work.
7. Wood and plastic fabrications.
8. Partitions.
9. Shelf angles and masonry lintels.

1.2 RELATED SECTIONS

1. Section 05120, Structural Steel.
2. Section 05500, Miscellaneous Metal Fabrications.
3. Section 05520, Aluminum Handrails and Railings.

4. Section 15140, Pipe Hangers, Supports and Restraints.

1.3 QUALITY ASSURANCE

A. Reference Standards: Comply with the applicable provisions and recommendations of the following, except as otherwise shown and specified.

1. ASTM A 307, Specification for Carbon Steel Bolts and Studs, 60,000 psi Tensile.

2. ASTM A 320, Specification for Alloys-Steel Bolting Materials for Low-Temperature Service.

B. Expansion anchors and inserts shall be UL or FM approved.

C. Toggle Bolts: FS-FF-B-588C, Type I, Class A, Style 1.

1.4 SUBMITTALS

A. Shop Drawings: Submit for approval the following:

1. Setting drawings and templates for location and installation of anchorage devices.

2. Copies of manufacturer's specifications, load tables, dimension diagrams and installation instructions for the devices.

B. Samples: Submit for approval the following:

1. Representative samples of bolts, anchors and inserts as may be requested by ENGINEER. Review will be for type and finish only. Compliance with all other requirements is exclusive responsibility of CONTRACTOR.

PART 2 PRODUCTS

2.1 DESIGN CRITERIA

A. When the size, length or load carrying capacity of an anchor bolt, expansion anchor, toggle bolt, or concrete insert is not shown on the Drawings, provide the size, length and capacity required to carry the design load times a minimum safety factor of four.

B. Determine design loads as follows:

1. For equipment anchors, use the design load recommended by the manufacturer and approved by ENGINEER.

2. For pipe hangers and supports, use one half the total weight of pipe, fittings, valves, accessories and water contained in pipe, between the hanger or support in question and adjacent hangers and supports on both sides.

3. Allowances for vibration are included in the safety factor specified above.

4. Anchors shall develop ultimate shear and pull-out loads of not less than the following values in concrete:

Bolt Diameter (Inches)	Min. Shear (Pounds)	Min. Pull-Out Load (Pounds)
1/2	4,500	6,300
5/8	6,900	7,700
3/4	10,500	9,900

2.2 MATERIALS

A. Anchor Bolts:

1. Provide carbon steel bolts complying with ASTM A 307, non headed type unless otherwise indicated.

2. In buried or submerged locations, provide stainless steel bolts complete with nuts and washers complying with ASTM A 320, AISI Type 304. Other AISI types may be used subject to ENGINEER'S approval.

B. Expansion Anchors:

1. Provide stainless steel anchors complying with ASTM A 320, AISI Type 304.

2. Anchors shall be of the size required for the concrete strength specified. Provide stud type (male thread) or flush type (female thread), as required.

3. Manufacturer: Provide anchors of one of the following:

a. Molly Division of USM Corporation.

b. Hilti, Incorporated.

4. In buried or submerged locations, provide stainless steel anchors complying with ASTM A 320, AISI Type 303. Other AISI types may be used, subject to ENGINEER'S approval.

C. Toggle Bolts:

1. Provide spring-wing toggle bolts, with two-piece wings.

2. Provide carbon steel bolts with zinc coating in accordance with FS-QQ-Z-325.

3. Manufacturer: Provide toggle bolts of one of the following:

a. U.S.E. Diamond, Incorporated.

b. Haydon Bolts, Incorporated.

D. Concrete Inserts:

1. For piping, grating, floor plate and masonry lintels, provide malleable iron inserts. Provide those recommended by the manufacturer for the required loading.

2. Finish shall be black.

3. Product and Manufacturer: Provide one of the following inserts:

a. Figure 282 by ITT Grinnell.

b. No. 380 by Hohmann and Barnard, Incorporated.

E. Powder actuated fasteners and other types of bolts and fasteners not specified herein shall not be used unless approved by ENGINEER.

PART 3 - EXECUTION

3.1 INSPECTION

A. CONTRACTOR shall examine areas and conditions under which anchor bolts, expansion anchors, toggle bolts and concrete insert Work is to be installed, and notify ENGINEER of conditions detrimental to proper and timely completion of Work.

3.2 INSTALLATION

A. Drilling equipment used and installation of expansion anchors shall be in accordance with manufacturer's instructions.

B. Assure that embedded items are protected from damage and are not filled in with concrete.

C. Expansion anchors may be used for hanging or supporting pipe 2 inches diameter and smaller. Expansion anchors shall not be used for larger pipe unless otherwise shown or approved by ENGINEER.

D. Use concrete inserts for pipe hangers and supports for the pipe size and loading recommended by the insert manufacturer.

E. Use toggle bolts for fastening brackets and other elements onto masonry units.

F. Unless otherwise shown or approved by ENGINEER conform to following for expansion anchors:

1. Minimum embedment depth in concrete: 5 diameters.

2. Minimum anchor spacing on centers: 10 diameters.

3. Minimum distance to edge of concrete: 5 diameters.

4. Increase dimensions above if required to develop the required anchor load capacity.

3.3 CLEANING

A. After embedding concrete is placed, remove protection and clean bolts and inserts.

END OF SECTION 05505

SECTION 05520
ALUMINUM HANDRAILS AND RAILINGS

PART 1 GENERAL

1.1 SECTION INCLUDES

A. Furnish and install aluminum handrail and railings Work including, but not necessarily limited to top and intermediate horizontal railing, handrail, toeboard, anchors and fasteners, sleeves, castings, reinforcing inserts, wall brackets, and other miscellaneous accessories.

1.2 RELATED SECTIONS:

1. Section 03010, Grout.

2. Section 05500, Miscellaneous Metal Fabrications.

1.3 QUALITY ASSURANCE

A. Manufacturer Qualifications:

1. Engage a single firm, with undivided responsibility for performance of the aluminum handrail and railing Work.

2. Engage a firm which can show five (5) years previous successful experience in the fabrication and erection of aluminum handrail and railing systems of scope and type similar to the required Work.

3. Provide manufacturer capable of fabricating custom details shown.

B. Design Criteria:

1. Provide adequate expansion within the fabricated system which allows a thermal change of 100° F above installation temperature without warp or bow. Provide 0.1 inch space for each 20 feet of length of rail for each 25° F difference of thermal change specified or use manufacturer's published formulas for determining expansion joint movement and spacing. Limit the exposed width of each expansion joint to 1/4 inch.

2. Provide expansion joint in aluminum handrail and railing system work where systems cross expansion joints in structure.

3. Aluminum handrail and railing is shown to indicate general locations where handrail and railing is required by the ENGINEER. All aluminum handrail and railing shown shall be as specified herein regardless of the number of immediate horizontal rails shown. In addition, where handrail or railing is required by either the State of Rhode Island Official Compilation of Codes, Rules and Regulations or the Occupational Safety and Health Act of 1970, aluminum handrail and railing of the type specified herein shall be provided at no additional cost to ENGINEER, whether or not shown.

4. Configuration of all handrail and railing details shall be as shown on the General Railing and Handrail Sheet regardless of symbolic indications which may be otherwise shown.

5. Provide aluminum handrail and railing system Work that conforms to OSHA, Part 1910.23, including the 200 pound loading requirement. In addition, the system shall conform to the following requirements of ANSI A1264:

   a. Completed aluminum handrail and railing system Work to withstand a load of 25 pounds per linear foot applied in any direction at the top of the handrail and railing.

   b. Intermediate rail to withstand a horizontal load of 20 pounds per linear foot.

   c. All above loads are not additive.

   d. Other pertinent requirements ceded to ANSI A1264.1 by governing codes.

6. Select systems components and post spacing so that specified applied loads produce no permanent set in the completed aluminum handrail and railing system Work.

7. All railing system posts shall be provided with a circular profile solid reinforcing bar with outside diameter equal to inside diameter of post. All posts shall receive one reinforcing bar. Select schedule of pipe using alloys, minimum diameter, loadings and maximum post spacing specified in order to limit deflection in each single-span of handrail and railing to 1.5-inches maximum and on railing posts to 1.4-inches maximum and with a safety factor of 1.65:1 for all Work.

C. Codes: Comply with the applicable requirements of the State of Rhode Island Official Compilation of Codes, Rules and Regulations and the Occupational Safety

and Health Act of 1970 for types of aluminum handrail and railing system Work shown and specified.

D. Allowable Tolerances:

1. Limit variation of cast-in-place inserts, sleeves and field drilled holes to the following:

   a. Spacing: +3/8 inch.

   b. Alignment: +1/4 inch.

   c. Plumbness: +1/8 inch.

2. Limit variation of completed railing system alignment to 1/4 inch in 12 feet.

3. Set rails horizontal or parallel to rake of steps or ramp to within 1/4 inch in 12 feet.

E. Reference Standards: Comply with applicable provisions and recommendations of the following, except as otherwise shown or specified.

1. ASTM B 26, Aluminum-Alloy Sand Castings.

2. ASTM B 210, Aluminum-Alloy Drawn Seamless Tubes.

3. ASTM B 221, Aluminum-Alloy Extruded Bars, Rods, Wire, Shapes and Tubes.

4. ASTM B 241, Aluminum-Alloy Seamless Pipe and Seamless Extruded Tube.

5. ASTM B 247, Aluminum-Alloy Die and Hand Forgings.

6. ASTM B 429, Aluminum-Alloy Extruded Structural Pipe and Tube.

7. AWS D10.7, Gas Shielded-Arc Welding of Aluminum and Aluminum Alloy Pipe.

8. The Aluminum Association, Aluminum Standards and Data; and Standards for Anodized Architectural Aluminum.

9. NMMM, Metal Finishes Manual".

10. NMMM, Pipe Railing Manual.

11. ANSI A1264.1, Safety Requirements for Workplace Floor and Wall Openings, Stairs and Railing Systems.

12. OSHA Part 1910.23 - Guarding Floor and Wall Openings and Holes.

F. Field Measurements: Take field measurements, where required, prior to preparation of Shop Drawings and fabrication to ensure proper fitting of the Work.

G. Shop Assembly: Preassemble items in the shop to the greatest extent possible, so as to minimize field splicing and assembly of units at the project site. Disassemble units only to the extent necessary for shipping and handling limitations. Clearly mark units for reassembly and coordinate installation.

1.4 SUBMITTALS

A. Samples: Submit for approval the following:

1. Full size sample of assembled post and rails intersections with all associated components including mounted toeboard and socket, all with specified metal finish, including typical welded or bolted connections, with rails not less than 6-inches long. Samples will be reviewed for finish, color, joinery tolerances, workmanship and general component assembly only. Compliance with all other requirements is the exclusive responsibility of CONTRACTOR.

2. Color Samples: Maximum range of clear anodized aluminum that shall appear in finished Work. Prepare range samples, to show the highest level of color control feasible for actual aluminum handrail and railing system Work, as determined by the licensor of the finishing process selected, on actual extrusions and castings of the Work.

B. Shop Drawings: Submit for approval the following:

1. Shop Drawings for the fabrication and erection of aluminum handrail and railing system Work. Include all plans and elevations identifying the location of all handrail and railing, and details of sections and connections. Show all anchorage items.

2. Calculations for the complete structural design of the aluminum handrail and railing system Work including calculations showing compliance with design criteria specified.

3. Manufacturer's complete catalogs showing complete selection of standard and custom components and miscellaneous accessories for selection by the ENGINEER.

4. Maintenance Manuals: Upon completion of the Work, furnish copies of detailed maintenance manual including the following information:

   a. Product name and number.
   b. Name, address and telephone number of manufacturer and local distributor.

   c. Detailed procedures for routine maintenance and cleaning, including cleaning materials, application methods and precautions as to use of materials that may be detrimental to finish when improperly applied.

C. Certification: Furnish certification by manufacturer that load tests have been performed on the aluminum handrail and railing systems Work and that they conform to all applicable OSHA, ANSI and building code requirements for loading and deflections and meet minimum criteria specified herein.

D. Finish: Furnish a written certificate confirming specified coating film thickness, coating weight, sealing treatment and stain test.

1.5 PRODUCT DELIVERY, STORAGE AND HANDLING

A. Delivery of Materials:

1. Deliver materials to the site in good condition and properly protected against damage to finished surfaces.

B. Storage of Materials:

1. Store all materials in clean, dry location, away from uncured concrete and masonry.

2. Cover all materials with waterproof paper, tarpaulin or polyethylene sheeting.

C. Handling of Materials:

1. Keep on-site handling to a minimum.

2. Maintain protective covering on handrails and railings until installation is complete.

1.6 JOB CONDITIONS

A. Protection: Protect cast-in-place sleeves and field-drilled holes from debris and water intrusion by use of temporary covers or removable foam inserts.

PART 2 PRODUCTS

2.1 MATERIALS

A. Extruded Aluminum Architectural and Ornamental Shapes: ASTM B 221, Alloy 6063-T52.

B. Aluminum Forgings: ASTM B 247.

C. Extruded or Drawn Aluminum Pipe and Tube:

1. ASTM B 429 or ASTM B 241, Alloy 6063-T5, 6063-T52 or 6063-T832 as required by loadings, deflections and post spacings specified.

2. Provide all rails and posts with minimum outside diameter of 1.900-inches.

D. Reinforcing Bars: Solid 24-inch long 6061-T6 circular cross section aluminum reinforcing bars with outside diameter same as inside diameter of post.

F. Anchors and Fastenings: Stainless steel of the type recommended by the manufacturer of the aluminum handrail and railing system. Provide minimum of four bolt fasteners per post where surface mounted posts are shown.

G. Castings:

1. Provide high strength aluminum alloy brackets, flanges and fittings suitable for anodizing as specified.

2. Aluminum-Alloy Sand Castings: ASTM B 26.

H. Connector Sleeves: Schedule 40, 5-inches long by 1.610-inches diameter.

I. Brackets and Flanges: Provide manufacturer's complete selection of standard and custom brackets and flanges for railing posts and for handrail supports.

J. Sockets: Provide 6-inch deep by 2-1/2-inch outside diameter aluminum sockets with 3-1/2-inch wide socket cover on bottom of all sockets and on top and bottom of removable post sockets.

K. Hinges: Provide two self-closing aluminum hinges for each railing system gate shown.

L. Latches and Stops: Provide one latch and stop with rubber bumper and 1-inch diameter plastic knob for each railing system gate shown.

M. Chain, Snaps and Eye Bolts: Provide oblong 0.250-inch welded link, Type 316 stainless steel chain weighing 57 pounds per cubic foot, each link 1-1/8-inch by 7/16-inch. Provide stainless steel eyebolts, 1/4-inch stainless steel threaded quick links and heavy duty swivel snaps with spring loaded latch.

N. Cover Flanges: Provide 1-inch high by 4-inch diameter aluminum cover flanges for all non-removal posts and 3-1/2-inch wide by 1-1/8-inch high aluminum pipe collars with 1/4-inch set screws for all removable posts.

O. Components and Miscellaneous Accessories: Provide a complete selection of manufacturer's standard and custom aluminum handrail and railing components and miscellaneous accessories.

P. Adhesive: Epoxy type as recommended by handrail and railing manufacturer.

2.2 FABRICATION

A. Form exposed Work true to line and level with accurate angles, surfaces and straight edges.

B. Form bent-metal corners to the radius shown without causing grain separation or otherwise impairing the Work. Form all change in handrail and railing direction with radius bends.

C. Remove burrs from all exposed edges.

D. Form elbow bends and wall returns to uniform radius, free from buckles and twists, with smooth finished surfaces, or use prefabricated bends.

E. Locate intermediate rail equally spaced between top rail and finished floor.

F. Close aluminum pipe ends by using prefabricated fittings.

G. Weep Holes:

1. Fabricate joints which will be exposed to the weather so as to exclude water.

2. Provide 15/64 inch diameter weep holes at the lowest possible point on all railing system posts.

3. Provide pressure relief holes at closed ends of handrails and railings.

H. Toeboards:

1. Provide extruded 6063 alloy aluminum toeboards for railings, unless railing is mounted on curbs or other construction of sufficient height and type to meet the requirements of OSHA 1910.23. Bars or plates are not acceptable and shall not be approved by ENGINEER.

2. Unless otherwise specified, toeboards shall meet requirements of OSHA Part 1910.23, Section (e).

3. Provide manufacturer's toeboard detail which accommodates movement caused by thermal change specified without warping or bowing toeboards.

I. Reinforcing Bars: Provide circular profile solid reinforcing bar friction-fitted at all railing system posts. Extend reinforcing bars 6-inches into cast-in- place sleeves or other types of supporting brackets.

J. Mechanically Fitted Component Pipe Handrail and Railing:

1. Use a nonwelded pipe handrail and railing system with posts, top and intermediate rail(s) and flush joints.

2. Provide a top and one intermediate horizontal rail, equally spaced.

3. Blind rivets, pop rivets or other exposed fastening devices shall not be used in the Work. Fasteners used for side mounting fascia flanges where shown or specified may be exposed in the Work. Provide internal threaded tubular aluminum rivets, stainless steel through bolts with lock nuts, stainless steel sheet metal screws with lockwashers and epoxy adhesive for fastening all components of the Work.

4. Product and Manufacturer: Provide one of the following:

a. Custom Fabricated Connectorail System by Julius Blum & Company, Incorporated.

b. Custom Fabricated Series SOO Non-Welded Aluminum Pipe Railing by Superior Aluminum Products, Incorporated.

2.3 ALUMINUM COATINGS

A. General:

1. Prepare surfaces for finishing in accordance with recommendations of the aluminum producer and the finisher or processor.

2. Adjust and control the direction of mechanical finishes specified to achieve the best overall visual effect in the Work.

3. Color and Texture Tolerance: ENGINEER reserves the right to reject aluminum materials because of color or texture variations, which are visually objectionable, but only where the variation exceeds the range of variations established by the manufacturer prior to the Work, by means of range samples which have been accepted by ENGINEER.

4. Anodize all aluminum components of the Work.

B. Exposed Aluminum Anodic Coating: Provide anodic coatings as specified which do not depend on dyes or impregnation processes to obtain color. Apply architectural Class 1 coatings using only the alloy and electrolyte to obtain specified colors. Comply with the following:

1. Chemically finish aluminum by etching to a medium matte finish,Aluminum Association Designation - C22.

2. Desmut by bathing the aluminum in either nitric acid solution or as recommended by the coating applicator.

3. Clean and rinse between steps as recommended by the aluminum manufacturer.

4. Provide architectural Class I high density anodic coating, Aluminum Association Designation A41, for clear coatings.

5. Coating Thickness, ASTM B 244: Minimum of 0.7 mils thick.

6. Coating Weight, ASTM B 137: Minimum of 32 mg/sq. in.

7. Resistance to Staining, ASTM B 136: No stain after 5 minutes dye solution exposure.

8. Salt Spray, ASTM B 117: 30,000 hours exposure with no corrosion or shade change.

PART 3 EXECUTION

3.1 INSPECTION

A. Examine the substrate and conditions under which the aluminum handrail and railing system Work is to be performed and notify the ENGINEER in writing of unsatisfactory tolerances which exceed specified limits and other conditions detrimental to proper and timely completion of the Work. Do not proceed with installation until unsatisfactory conditions have been corrected in a manner acceptable to the ENGINEER.

3.2 INSTALLATION

A. Fastening to In-Place Construction:

1. Adjust aluminum handrail and railing system Work prior to securing in place, to ensure proper matching at butting joints and correct alignment throughout their length. Plumb posts in each direction. Secure posts and rail ends to building construction as follows:

   a. Anchor posts in concrete by means of sockets and side mounted fascia flange brackets, set and anchored into the concrete floor slabs and sides of concrete walls and raised walkways. Provide closure secured to the bottom of sleeve. Before installing posts remove all debris and water from sleeves. Verify that reinforcing bars have been inserted into posts before installation. Do not install posts without reinforcing bar. For all nonremovable railing sections, after the posts have been inserted into the sockets, fill the annular space between posts and sockets solid with grout as specified in Section 03600, Grout.

   b. Anchor posts to stair stringers with stringer or support flanges, angle type or floor type as required by conditions, shop connected to posts and bolted to the supporting members. Flanges shall be as recommended by manufacturer. Verify that reinforcing bars have been inserted into posts before installation. Do not install posts without reinforcing bar.

   c. Provide removable railing sections where shown. Removable railing posts shall be provided with friction fitted reinforcing bar in each post. Provide sockets with socket covers stored in extruded toeboard. Provide

aluminum pipe collars for all removable posts. Accurately locate sleeves to match post spacings.

d. All posts set in concrete shall be provided with an aluminum floor cover flange.

2. Use devices and fasteners recommended by the aluminum handrail and railing manufacturer.

B. Cutting, Fitting and Placement:

1. Perform cutting, drilling and fitting required for installation. Set the Work accurately in location, alignment and elevation, plumb, level, true and free of rack, measured from established lines and levels.

2. Fit exposed connections accurately together to form tight hair- line joints. Do not cut or abrade the surfaces of units which have been finished after fabrication, and are intended for field connections.

3. Permanent field splice connections shall be made using manufacturer's recommended epoxy adhesive and 5-inch minimum length connector sleeves. Tight press-fit all field splice connectors and install in accordance with manufacturer's written instructions. Follow epoxy manufacturer's recommendations for requirements of installation and conditions of use.

4. Make all splices as near as possible to posts but not exceeding 12 inches from nearest post.

5. Space posts 6 foot-0 inch minimum on centers and 8 foot-0 inch maximum on centers, based on loading and deflection criteria specified and manufacturer's suggested maximum spacing except where details shown dimension required locations for posts. Where details show post location requirements at or near end of runs, uniformly space intermediate posts as required to meet loading and deflection criteria specified but not greater than maximum spacing specified.

6. Provide hinged railing sections as shown. Provide hinges and latch for connection to adjacent railing.

7. Provide chain sections as shown. Provide one chain length with fastening accessories for top and each intermediate railing.

8. Secure handrails to walls with wall brackets and end fittings as shown. Locate brackets as shown or, if not shown, at not more than 5 feet on centers.

9. Secure wall brackets to building construction as follows:
   a. For concrete and solid masonry anchorage, use bolt anchor expansion shields and lag bolts.

   b. For hollow masonry anchorage, use toggle bolts having square heads.

10. Securely fasten toeboards in place with not more than 1/4 inch clearance above floor level.

11. Drill one 15/64 inch diameter weep hole not more than 1/4 inch above the top of location of circular profile solid reinforcing bar in each post.

C. Expansion Joints:

1. Provide slip joint with internal sleeve extending 2 inches minimum beyond joint on each side.

2. Construct expansion joints as for field splices except fasten internal sleeve securely to one side of rail only.

3. Locate joints within 6 inches of posts.

4. Submit locations and details of all expansion joints to the ENGINEER.

D. Protection from Dissimilar Materials:

1. Coat all surfaces of aluminum in contact with dissimilar materials such as concrete, masonry and steel as specified in Section 09900, Painting.

2. Remove coating where exposed in the finished Work.

3.3 CLEANING AND REPAIRING

A. Remove protective plastic as recommended by manufacturer immediately after installation.

B. Remove all stains, dirt, grease or other substances by washing railings thoroughly using clean water and soap; rinse with clean water.

C. Do not use acid solution, steel wool or other harsh abrasives. If stain remains after washing remove defective sections and replace with new material meeting the requirements of the Specification.

D. Remove all damaged or otherwise defective Work and replace with material that meets specification requirements.

END OF SECTION 05520

SECTION 05535
ALUMINUM GRATING

PART 1 GENERAL

1.1 SECTION INCLUDES

A. Provide and install aluminum pressure-locked grating and frames.

B. Coordination:

1. Review installation procedures under other Sections and coordinate the Work that must be installed with or attached to the grating.

1.2 QUALITY ASSURANCE

A. Reference Standards: Comply with applicable provisions and recommendations of the following except as otherwise shown or specified.

1. ASTM B 210, Standard Specification for Aluminum and Aluminum Alloy Drawn Seamless Tubes.

2. ASTM B 221, Standard Specification for Aluminum and Aluminum Alloy Extruded Bars, Rods, Wire, Shapes and Tubes.

3. MMM, Metal Finishes Manual, and Metal Bar Grating Manual.

B. Field Measurements:

1. Take field measurements prior to preparation of Shop Drawings and fabrication where required, to ensure proper fitting of the Work.

1.3 SUBMITTALS

A. Submit for approval the following: Representative samples of grating, appurtenances and other finished products as requested by ENGINEER. His review will be for type and finish only. Compliance with all other requirements is the exclusive responsibility of the CONTRACTOR.

B. Submit for approval the following:

1. Fabrication and erection of all Work. Include plans, elevations, and details of sections and connections. Show anchorage and accessory items.

2. Setting drawings and templates for location and installation of anchorage devices.

3. Manufacturer's specifications, load tables, dimension diagrams, anchor details and installation instructions.

PART 2 PRODUCTS

2.1 PERFORMANCE CRITERIA

A. The manufacturer shall furnish grating to conform the following criteria:

1. Design Loads: Uniform live load or a concentrated load on any area 24 inches square, whichever gives the greatest stresses.

Live Load	Concentrated Load
200 psf	2000 lbs

2. Maximum Clear Span Deflection: 1/120 of span.

3. Maximum Fiber Stress: 12,000 psi.

4. Bearing bars shall be a maximum of 1-3/16 inches on center and 3/16 inches minimum thickness.

5. Cross bars or bent connecting bars shall not exceed 7 inches on center.

2.2 MATERIALS

A. Bearing Bars: Alloy 6061-T6 or Alloy 6063-T6, conforming to ASTM B 221.

B. Cross Bars or Bent Connecting Bars: Alloy conforming to either ASTM B 221 or ASTM B 210.

C. Rivets: Aluminum-Alloy as recommended by the Manufacturer.

2.3 FABRICATION

A. Use materials of the minimum size and thickness as specified above unless shown otherwise. Work to the dimensions shown on approved Shop Drawings.

B. Grating shall be as shown and shall comply with the NAAMM "Metal Bar Grating Manual", except as specified herein.

1. Cross Bars: Perpendicular to bearing bars, secured by mechanical locking.

2. Traffic Surface: Plain.

C. Type of Finish: Mill, as fabricated.

D. Provide grating sections with end-banding bars welded about 4 inches on centers for each panel, 4 saddle clip or flange block anchors designed to fit 2 bearing bars, and 4 stud or machine bolts with washers and nuts, unless otherwise indicated.

E. Cut gratings for penetrations as indicated. Layout units to allow grating removal without disturbing items penetrating grating.

1. For openings in grating separated by more than 4 bearing bars, provide banding of same material and size as bearing bars, unless otherwise indicated. Weld band to each bearing bar.

2. Notching of bearing bars at supports to maintain elevations will not be permitted.

F. Weld stainless steel stud bolts to receive saddle clip or flange block anchors to supporting steel members. Drill for machine bolts when supports are aluminum.

G. Provide gratings in concrete with aluminum angle frames having mitered corners and welded joints. Grind exposed joints smooth. Frames shall have welded anchors set into concrete. Angle size shall match grating depth selected to assure flush fit.

H. Provide gratings attached to existing concrete, masonry or steel with aluminum bearing angles fastened with anchors as shown or otherwise approved by ENGINEER.

PART 3 EXECUTION

3.1 INSTALLATION

A. Fastening to In-Place Construction:

1. Use anchorage devices and fasteners to secure grating to supporting members or prepared openings, as recommended by the manufacturer.

B. Cutting, Fitting and Placement:

1. Perform all cutting, drilling and fitting required for installation. Set the Work accurately in location, alignment and elevation, plumb, level, true and free of rack. Do not use wedges or shimming devices.

2. However gratings are pierced by pipes, ducts, and structural members, cut openings neatly and accurately to size and attach a strap collar not less than 1/8-inch thick to the cut ends of the bars.

3. Divide the panels into sections only to the extent required for installation wherever grating is to be placed around previously installed pipe, ducts, and structural members.

4. For contact surfaces between aluminum and concrete, masonry, steel, or other dissimilar surface use a coat of bituminous paint or other approved insulating material.

C. Protection of Aluminum from Dissimilar Materials: Using approved asphaltic or zinc chromate paint, provide two heavy coats on aluminum surfaces in contact with dissimilar materials such as concrete, masonry, steel and other metals.

END OF SECTION 05535

SECTION 06100
ROUGH CARPENTRY

PART 1 - GENERAL

1.1 SECTION INCLUDES

A. Providing openings in rough carpentry to accommodate the Work under this and other Sections and building into the rough carpentry all items such as sleeves, anchor bolts, inserts and all other items to be embedded in rough carpentry for which placement is not specifically provided under other Sections.

The types of rough carpentry Work required includes, but is not necessarily limited to, the following:

a. Wood framing, blocking, furring strips and other miscellaneous wood framing.

b. Plywood.

c. Miscellaneous accessories, fasteners and anchorages.

1.2 QUALITY ASSURANCE

A. Design Criteria:

1. Lumber Standard: Comply with PS-20, except as otherwise specified.

2. State of Rhode Island Official Compilation of Codes, Rules and Regulations.

B. Codes: Comply with the applicable requirements of governing authorities and the State of Rhode Island Official Compilation of Codes, Rules and Regulations for size, spacing and attachment of wood members.

C. Source Quality Control:

1. Factory-mark each piece of lumber and type, grade, mill and grading agency.

2. Shop-fabricate rough carpentry Work to the extent feasible and where shop fabrication will result in better workmanship than feasible for on-site fabrication.

D. Reference Standards: Comply with applicable provisions and recommendations of the following, except where otherwise shown or specified:

1. American Lumber Standard Committee, National Grading Rule for Dimension Lumber, PS-20.

2. Occupational Safety and Health Act of 1970.

3. West Coast Lumber Inspection Bureau, Grading Rules.

1.3 PRODUCT DELIVERY STORAGE AND HANDLING

A. Storage of Materials:

1. Keep materials dry during delivery and storage.

2. Protect against exposure to weather and contact with damp or wet surfaces.

3. Stack lumber, and provide air circulation within stacks.

1.4 JOB CONDITIONS

A. Coordination: Fit rough carpentry Work to other work and scribe and cope as required for accurate fit. Correlate location of furring, nailers, blocking, grounds and similar supports to allow proper attachment of other work.

PART 2 - PRODUCTS

2.1 MATERIALS

A. Lumber, General:

1. Nominal sizes are shown, except as shown by detail dimensions. Provide actual sizes as required by American Lumber Standard Committee, National Grading Rule for Dimension Lumber PS-20, for the moisture content specified for each use.

   a. Provide dressed lumber, S4S, unless otherwise shown or specified.

   b. Provide seasoned lumber with 19 percent maximum moisture content at time of dressing.

2. Provide the following grade and species:

   a. Construction Grade.

   b. Douglas Fir, WWPA, or Southern Pine, SPIB.

B. Plywood:

1. Exterior Type: Grade CC/EXT-APA, 3/4-inch thick.

2. American Lumber Standard Committee, Plywood Standard, PS-1.

C. Fasteners and Anchorages:

1. Provide size and type as recommended by the State of New York Official Compilation of Codes, Rules and Regulations, complying with applicable Federal Specifications for nails, staples, screws, bolts, nuts, washers and anchoring devices.

2. Provide stainless steel nails for exterior Work. Zinc coated nails for all other uses.

D. Lumber for Protection and Temporary Support: Size and grades to meet applicable requirements of the Occupational Safety and Health Act of 1970 and structural requirements.

PART 3 - EXECUTION

3.1 INSPECTION

A. CONTRACTOR (and/or his installer) shall examine the substrates and supporting structure and the conditions under which the rough carpentry Work is to be installed, and notify ENGINEER in writing of the conditions detrimental to the Work. Do not proceed with the installation until unsatisfactory conditions have been corrected in a manner acceptable to ENGINEER.

3.2 INSTALLATION

A. General:

1. Discard units of material with defects which might impair the quality of the Work, and units which are too small to fabricate the Work with minimum joints or the optimum joint arrangement.

2. Set rough carpentry Work accurately to required levels and lines, with members plumb and true and accurately cut and fitted.

3. Securely attach rough carpentry Work to substrates by anchoring and fastening as shown and as required by recognized standards. Countersink nail heads on exposed rough carpentry Work and fill holes. Use common wire nails, except as otherwise shown. Use finishing nails for finish Work. Select fasteners of size that will not penetrate members where opposite side will be exposed to view or will receive finish materials. Make tight connections between members. Install fasteners without splitting of wood, predrill as required.

B. Wood Grounds, Nailers, and Blocking

1. Provide wherever shown and where required for attachment of other work. Form to shapes as shown and cut as required for true line and level of Work to be attached. Coordinate location with other work involved.

2. Attach substrates as required to support applied loading. Countersink bolts and nuts flush with surfaces, unless otherwise shown.

3. Provide permanent grounds of dressed, preservative treated, keybevelled lumber not less than 1-1/2 inch wide and of the thickness required to bring face of ground to exact thickness of finish material involved. Remove temporary grounds when no longer required.

C. Plywood: Install in accordance with the requirements of the State of Rhode Island Official Compilation of Codes, Rules and Regulations. Allow for installed clearances between individual plywood panels as specified by the plywood manufacturer.

END OF SECTION 06100

SECTION 06400
PRE-ENGINEERED WALL PANELS

PART 1 GENERAL

1.1 SECTION INCLUDES

A. Furnish and install pre-engineered wall panels with expanded polystyrene (EPA) insulation.

1.2 RELATED SECTIONS

A. Section 06100, Rough Carpentry.

1.3 SUBMITTALS

A. Provide evidence of compliance with code requirements as an alternate method of construction.

B. Each wall panel shall be accompanied with verified structural calculations by a registered architect or professional engineer qualified to per form such work.

C. Manufacturer shall certify that panels have been tested in accordance with ASTM E 72 and ASTM E 119, ASTM E 84, and other applicable tests.

D. Manufacturer shall supply a hard copy product certificate showing compliance to Third Party Quality Control.

E. Provide Material Safety Data Sheet (MSDS) regarding panel material components.

1.4 QUALITY ASSURANCE

A. Each panel shall be labeled indicating the maintenance of in-plant Quality Control/Third Party Inspection Service in compliance with national codes.

B. Provide evidence of third party inspection and labeling of all insulation used in manufacture of panels. Both flame and physical characteristics will be covered by manufacturer's quality Control and Listing programs.

C. Provide Lamination and R-Value Warranty documents for building owner acceptance and execution. Manufacturer's standard forms shall be submitted.

D. Provide panels with insect treatment. Treatment must be EPA registered, with treatment efficacy substantiated by independent research and on-going in-plant testing.

1.5 PRODUCT DELIVERY, STORAGE AND HANDLING

A. All panels shall be stored in a protected area and supported to prevent contact with the ground.

B. Prior to installation, panels shall be covered and protected from exposure to sunlight and moisture.

C. After installation, all panels shall be covered to prevent contact with water on all exposed panel edges.

PART 2 PRODUCTS

2.1 WALL PANELS

A. Provide a pressure laminated panel consisting of the following:

1. Expanded polystyrene core - minimum of .95 pcf AFM Certified EPS complying with ASTM C 578 (other densities may be specified). Insulation manufacturer must provide certification of Third Party Inspection.

2. OSB - shall be identified on the panel with an APA performance rating mark, with an Exposure 1 durability rating; minimum physical properties shall be tested and described in APA PRP-108.

3. Adhesives - shall be an approved laminating adhesive having an in use temperature range of -40° to +250°F.

B. Splines - splines for use in joining panels shall be supplied by panel manufacturer.

C. Fasteners - shall be #14 corrosion resistant screws for roof, corners and attachment of panel to frames. In addition, zinc galvanized screws, nails or staples for spline and plate attachments. All fasteners as supplied by panel manufacturer.

D. Caulk - a caulk compatible with all components of the panel and adjacent materials as supplied by the panel manufacturer.

E. Construction Adhesive - adhesive for installing accessories and dimensional lumber to be supplied by panel manufacturer.

F. Foam Sealant - a sealant compatible with all components of the panel and adjacent materials as supplied by the panel manufacturer.

G. Install caulks, adhesives and sealants per manufacturer's details.

H. Dimensional Lumber - SPF or white wood #2 or better or pre-engineered equivalent.

2.2 PERFORMANCE CHARACTERISTICS

A. Sizes 4' x 8' up to 8' x 24'.

B. Thermal Characteristics

R-Value Design Chart
R-Control Structural Panel

Panel Thickness	R-Value at 75°F	R-Value at 40°F
4 1/2"	14.88	16.00
6 1/2"	22.58	24.33
8 1/4"	29.31	31.63
10 1/4"	37.00	39.88
12 1/4"	44.71	48.31

C. Panels shall be manufactured in order to crate a 1/8" gap between sheathing edges to allow for movement and placement of caulk.

D. Structural Testing - Each panel type shown on the drawings shall meet or exceed performance standards when tested in accordance with the following methods:

1. Compressive Load
   Test Method: ASTM E 72

2. Transverse Load
   Test Method: ASTM E 72

3. Concentrated Load
   Test Method: ASTM E 72

4. Racking Load
   Test Method: ASTM E 72

5. Combined Axial and ending
   Test Method: ASTM E 72

6. Long Term Cold Creep Under Load
   Test method: ASTM E 72

7. Tension Testing
   Test Method: ASTM C 297

8. Impact Testing
   Test Method: ASTM E 695

9. Accelerated Aging
   Test Method: ASTM D 1183C

10. Insect Resistance Test

11. Full Scale Roof/Floor Diaphragm
    Test Method: Modified ASTM E 455

12. Tested values shall meet or exceed those stated on manufacturer's load design charts and applicable technical data reports.

E. Fire Testing - The panel with approved finishes shall have successfully passed the following fire tests as conducted by testing agencies approved and listed by the model code. In addition, panel must be listed in current UL Directories, Sections BLBT, BXUV and BZXX.

1. UBC 17-5, Room Corner Burn Test.

2. ASTM E 119, 20 Minute with 3-Story load applied for the duration of the test.

3. ASTM E 119, One Hour with 3-Story load applied for the duration of the test followed by hose stream.

4. ASTM E 119, One-Hour Roof/Ceiling with design load applied for the duration of the test.

5. ASTM E 119 (small scale) 20-minute and One-Hour wall exposures with openings.

6. ASTM E 84 Surface Burning Characteristics conducted for the rigid insulation core.

7. ASTM E 84 Surface Burning Characteristics conducted for the interior and exterior surfaces of the finished panel.

F. Wind uplift and diaphragm capacity shall be calculated for recommended fastening of roof panels by a certified engineering professional.

2.3 MANUFACTURERS/CONTRACTORS

A. All components called for in this section to be supplied by the panel manufacturer shall be obtained from the selected manufacturer or its approved supplied.

B. Manufacturers:

1. AFM Corporation, Box 246, Excelsior, MN 55331
   800-255-0176

2. Or equal.

C. All manufacturers seeking to qualify under this section shall submit all supporting documentation 30 days prior to the bid date.

PART 3 - INSTALLATION

3.1 GENERAL

A. The contractor shall inspect conditions of substrate, grade and other conditions which may affect the proper installation of panels. Any adverse conditions are to be reported in writing to the construction manager. Do not proceed with the installation until adverse conditions are corrected.

B. Installation shall be in strict accordance with manufacturer's published instructions, details and the drawings that are part of the contract documents for this project. Any conflicts between these documents shall be resolved in writing. All plans shall be reviewed by a qualified architect/engineer and shall be signed and/or sealed. Deviations from standard detail and load design values shall be calculated and signed and/or sealed by a qualified architect/engineer.

3.2 PROTECTION

A. When storing panels, do not allow them to come into ground contact. Stored panels must remain dry. Do not allow panels to be stored in an unsupported manner. Improper storage may cause tolerance problems in the field.

B. Roof panels must be fully protected from weather by roofing materials to provide temporary protection at the end of the day or when rain or snow is imminent.

C. Remove and replace insulated wall or roof panels which have become excessively wet or damaged before proceeding with installation of additional panels or other work.

D. All refuse created by the installation of the work in this section shall be removed by the construction manager.

END OF SECTION 06400

SECTION 08110
HOLLOW METAL DOORS AND FRAMES

PART 1 GENERAL

1.1 SECTION INCLUDES

A. Furnish and install all hollow metal doors and frames.

The types of hollow metal doors and frames required includes, but is not necessarily limited to, the following:

a. Flush doors and frames.

b. Fire-rated flush doors and frames.

c. Stick systems.

d. Miscellaneous fabrications, anchors, reinforcements, fasteners and trim.

1.2 COORDINATION

1. Review installation procedures under other Sections and coordinate them with the Work specified herein.

2. Where hollow metal doors and frames Work require the building-in of plates, inserts and other items, furnish required inserts to avoid delay in the work of other trades. Provide setting drawings, templates, and directions for installation of plates, inserts and anchors, required by the Work of this Section but installed under other Sections of the Work.

1.3 RELATED SECTIONS

1. Section 04200, Unit Masonry Construction.

2. Section 06100, Rough Carpentry.

3. Section 08710, Door Hardware.

4. Section 09900, Painting.

1.4 QUALITY ASSURANCE

A. Manufacturer Qualifications: Provide hollow metal doors, frames and accessories manufactured by a single firm specializing in the production of this type of Work and complying with all applicable standards of the Steel Door Institute, recommended specifications for Standard Steel Doors and Frames (S.D.I. 100).

B. Requirements of Regulatory Agencies:

1. Fire-rated Assemblies: Wherever a fire-resistance classification is shown or scheduled for hollow metal doors and frames Work (3-hour, 1-1/2 hour, and similar designations), provide fire rated hollow metal doors and frames investigated and tested as an complete assembly including type of fire door hardware to be used. Identify each fire door, frame and stick system assembly with recognized testing laboratory labels, indicating applicable fire rating of both door, frame and stick system assembly.

2. Construct assemblies to comply with NFPA Standard No. 80, and applicable provisions of the State of Rhode Island Official Compilation of Codes, Rules and Regulations.

3. Temperature Rise Rating: Wherever a temperature rise rating is required provide doors for ratings as specified in accordance with UL 10(b).

4. Oversize Assemblies: However hollow metal assemblies are larger than size limitations established by NFPA, provide manufacturer's certification that assembly has been constructed with materials and methods equivalent to labeled construction.

C. Reference Standards: Comply with applicable provisions and recommendations of the following, except where otherwise shown or specified.

1. ASTM A 153, Zinc Coating on Iron and Steel Hardware.

2. ASTM A 366, Carbon Steel Cold-Rolled Sheet.

3. ASTM A 525, Steel Sheet, Galvanized by the Hot-Dip Process General.

4. ASTM A 526, Steel Sheet, Galvanized by the Hot-Dip Process - Specifications.

5. ASTM A 568, Carbon Steel and High Strength Low Alloy Hot Rolled Sheet, Hot Rolled Strip and Cold-Rolled Sheet.

6. ASTM A 569, Steel, Carbon Hot-Rolled Sheet and Strip.

7. ASTM E 152, Fire Tests of Door Assemblies.

8. Steel Door Institute Standard Steel Doors and Frames.

9. ANSI A115, Specification for Door and Frame Preparations for Hardware.

10. NFPA 80, Standard for Fire Doors and Windows.

11. NFPA 252, Fire Tests of Door Assemblies.

12. UL10(b), Fire Tests of Door Assemblies.

13. UL 63, Fire Door Frames.

14. U.L. Building Materials Directory.

15. National Association of Architectural Metal Manufacturers (NM MM), Hardware Locations for Custom Hollow Metal Doors.

1.5 SUBMITTALS

A. Samples: Submit for approval the following:

1. Metal frame, 12-inch by 12-inch "L" section of frame showing corner detail of all types specified.

2. Stick system frame, 12-inch by 12-inch section of frame showing corner detail and molding and gasket of all types specified.

3. Door, 12-inch by 12-inch section of all door types specified showing internal construction, edge detail and reinforcement for butts.

B. Shop Drawings: Submit for approval the following:

1. Shop Drawings for the fabrication and installation of hollow metal doors and frames. Include details of each frame type, elevations of door design types, conditions at openings, details of construction, location and

installation requirements of finish hardware and reinforcements, and details of joints and connections.

2. Schedule of doors and frames using same reference numbers for details and openings as those on the Drawings.

C. Test Reports: Submit for approval the following:

1. Certification of Labeled Construction Fire for Doors and Frames.

2. Certification of label construction for doors not requiring labels but requiring labeled construction.

D. Certificates: Submit for approval the following:

1. Oversize Fire-rated Doors and Frames: Certification for oversize fire-rated doors and frames that each assembly has been constructed with materials and methods equivalent to requirements for labeled construction.

1.6 DELIVERY, STORAGE AND HANDLING

A. Delivery of Materials:

1. Deliver hollow metal doors and frames cartoned or crated to provide protection during transit and job storage.

2. Inspect hollow metal Work upon delivery for damage. Minor damage may be repaired provided the finish items are equal in all respects to new Work and acceptable to ENGINEER; otherwise, remove and replace damaged items as directed.

B. Storage of Materials:

1. Store doors and frames at the building site under cover.

2. Place units up off the floors in a manner that will prevent rust and damage.

3. Avoid the use of non-vented plastic or canvas shelters which could create a humidity chamber. If the cardboard wrapper on the door becomes wet, remove the carton immediately.

4. Provide a 1/4 inch space between stacked doors to promote air circulation.

1.7 SCHEDULES

A. Coordinate with other work by furnishing Shop Drawings, inserts and similar items at the appropriate times for proper sequencing of construction without delays.

PART 2 PRODUCTS

2.1 MATERIALS

A. Frames: Hot-Rolled Steel Sheets and Strips: Commercial quality carbon steel, pickled and oiled, complying with ASTM A 569 and ASTM A 568.

B. Door Faces: Zinc-coated carbon steel sheets of commercial quality, complying with ASTM A 526, with ASTM A 525, G60 zinc coating, millphosphatized.

C. Supports and Anchors: Sheet metal, hot-dip galvanized after fabrication complying with ASTM A 153, Class B.

D. Inserts, Bolts and Fasteners: Sheet metal, hot-dipped galvanized complying with ASTM A 153, Class C or D as applicable.

2.2 FABRICATION, GENERAL

A. Fabricate hollow metal units to be rigid, neat in appearance and free of defects, warp or buckle. Accurately form metal to required sizes and profiles. Practicable, fit and assemble units in the manufacturer's plant. Clearly identify Work, that cannot be permanently factory-assembled before shipment, to assure proper assembly at the project site. Weld exposed joints continuously, grind, dress, and make smooth, flush and invisible. Filler to conceal manufacturing defects is not acceptable.

B. Exposed Fasteners: Unless otherwise specified, provide countersunk flat Phillips or Jackson heads for exposed screws and bolts.

C. Finish Hardware Preparation:

1. Prepare hollow metal units to receive mortised and concealed finish hardware, including cutouts, reinforcing, drilling and tapping in accordance with final Finish Hardware Schedule and templates provided by hardware supplier. Comply with applicable requirements of ANSI A115, Specifications for Door and Frame Preparation for Hardware. Drilling and tapping for surface applied finish hardware may be done at the site.

2. Reinforce hollow metal units to receive surface-applied and recessed finish hardware.

3. Locate finish hardware as shown on approved Shop Drawings, in accordance with hardware templates provided by hardware manufacturer and in accordance with National Association of Architectural Metal Manufacturers, Hardware Locations for Custom Hollow Metal Doors. Refer to Section 8H1, Finish Hardware.

D. Shop Painting:

1. Clean, treat and paint exposed surface of fabricated hollow metal units, including galvanized surfaces.

2. Clean steel surfaces of mill scale, rust, oil grease, dirt and other foreign materials before the application of the shop coat of paint.

3. Apply pretreatment to cleaned metal surfaces, using cold phosphate solution (SSPC-PT 2), hot phosphate solution (SSPC-PT 4) or basic zinc chromate-vinyl butyral solution (SSPC-PT 3).

4. Refer to Section 9L, Painting for field applied primer and finish paint for exterior or interior exposed ferrous, non-ferrous, or galvanized surfaces.

5. Apply shop coat of prime paint within time limits recommended by pretreatment manufacturer. Apply a uniform dry film thickness of not less than 1.5 mils.

6. Finish shall be rust inhibitive primer capable of humidity test in accordance with ASTM B 117 as certified by an independent laboratory.

2.3 FLUSH DOORS

A. Door Types:

1. Provide flush design doors, 1-3/4-inches thick, seamless hollow construction, unless otherwise shown or specified.

B. Door Construction:

1. Fabricate doors of two outer stretcher-leveled steel sheets galvanized with a G60 zinc coating of 0.60 ounces per square foot in accordance with ASTM A 525 and A 526 and not less than 16 gage. Construct doors with smooth, flush surfaces without visible joints or seams or exposed faces or stile edges, except around glazed or louvered panel inserts. Provide continuously welded seams for all door construction. No fillers shall be used. Provide weep hole openings in the bottom of exterior doors to permit the escape of entrapped moisture.

2. Reinforce inside of doors with phenolic resin impregnated kraft 1-inch hexagonal cell honeycomb core completely filling the inside of the door and laminated to the inside of both face panels with an adhesive. The honeycomb material shall have a crushing strength not less than 4000 pounds per square foot and the lamination shall withstand not less than 1100 pounds per square foot in shear.

3. Door reinforcement may be modified in fabrication method approved by ENGINEER in order to provide a UL labeled fire rated door.

4. Reinforce tops and bottoms of doors with flushed mounted minimum 16 gage horizontal galvanized steel channels welded continuously to the outer sheets.

5. Edge profiles shall be provided on both stiles of doors as follows: beveled 1/8 inch in 2 inches.

C. Finish Hardware Reinforcement:

1. Refer to Section 08710, Door Hardware.

2. Hardware supplier shall furnish hollow metal door and frame manufacturer approved hardware schedule, hardware templates, and samples of physical hardware where necessary to insure correct fitting and installation.

3. Preparation includes sinkages and cut-outs for mortise and concealed hardware.

4. Provide reinforcements for both concealed and surface applied hardware:

   a. Drill and tap mortise reinforcements at factory, using templates.

   b. Install reinforcements with concealed connections designed to develop full strength of reinforcements.

5. Reinforce doors for required finish hardware, with minimum gages as follows:

   a. Hinges: Steel plate 1/4-inch gage thick by 1-1/2-inches wide by 8-inches longer than hinge secured by not less than 6 spot or projection welds.

   b. Mortise Locksets and Dead Bolts: 12 gage steel sheet, secured with not less than 2 spot or projection welds.

   c. Flush Bolts: 12 gage steel sheet, secured with not less than 2 spot or projection welds.

   d. Surface-Applied Closers: 1/4-inch thick steel plate, secured with not less than 6 spot or projection welds.

   e. Push Plates and Bars: 16 gage steel sheet secured with not less than 2 spot or projection welds.

   f. Surface Panic Devices: 16 gage sheet steel secured with not less than 2 spot or projection welds.

   g. Automatic Door Bottoms: Reinforce for mortise-type units with 14 gage steel, and 16 gage for surface-applied units.

D. Product and Manufacturer: Provide one of the following:

   1. Series CH with DURA-WELD seams by Pioneer Industries, Division of SOS Consolidated, Incorporated.

2.4 FIRE-RATED DOORS

A. Provide the same construction specified above under door construction and within UL requirements as specified.

B. Provide fire-rated doors in accordance with Underwriters' Laboratories Standard, UL 10(b), and NFPA No. 80 and as follows:

1. For a UL 3-hour (A) classification provide doors with a temperature rise rating of not more than 250 F maximum to 30 minutes of exposure.

2. For a UL 1-1/2 hour (B) classification provide doors with a temperature rise rating of not more than 450 F or 650 F maximum to 30 minutes of exposure.

C. Provide fire-rated doors with metal labels permanently fastened to the door. Labels shall display all UL required information.

D. Product and Manufacturer: Provide one of the following:

1. Series CH Underwriters' Label Doors with DURA-WELD seams by Pioneer Industries, Division of SOS Consolidated, Incorporation.

2.5 FRAMES

A. Frame Types: Provide hollow metal frames for doors, and other openings of size and profile as shown or specified.

B. Frame Construction:

1. Fabricate frames of full-welded unit construction, with corners mitered, reinforced, continuously welded full depth and width of frame with exposed welds ground flush and smooth.

2. Form frames of hot rolled prime quality carbon steel in accordance with ASTM A 568 and A 569 and galvanized with a G60 zinc coating of 0.60 ounces per foot in accordance with ASTM A 153, A 525, and A 526 or cold rolled steel sheets in accordance with ASTM A 366 and galvanized in accordance with ASTM A 153, A 525 and A 526.

3. Gage thickness of steel: not less than 14.

4. Finish Hardware Reinforcement: Reinforce frames for requiredFinish hardware with minimum gages as follows:

a. Hinges and Pivots: Steel plate 1/4-inch gage thick by 1-1/2-inches wide by 8-inches longer than hinge, secured by not less than 6 spot or projection welds.

b. Strike Plate Clips: Steel plate 10 gage thick by 1-1/2-inches wide by 3-inches long.

c. Surface-Applied Closers: 1/4-inch thick steel plate, secured with not less than 5 spot or projection welds.

5. Head Reinforcing: Where installed in masonry, leave vertical mullions in frames open at the top so they can be filled with grout.

6. Jamb Anchors: Furnish jamb anchors as required to secure frames to adjacent construction, formed of not less than 16 gage galvanized steel.

   a. Masonry Construction (except as otherwise shown): Adjustable, corrugated or perforated, T-shaped to suit frame size with leg not less than 2-inches wide by 10-inches long. Furnish at least 3 anchors per jamb up to 7 feet 6 inches height; 4 anchors up to 8 feet-0 inch jamb height; one additional anchor for each 24 inch or fraction thereof over 8 feet-0 inch height. Furnish UL construction where required.

   b. Cast-In-Place Concrete: Anchor frame jambs with minimum 3/8-inch concealed bolts into expansion shields or inserts at 6-inches from top and bottom and 24-inches on centers. Reinforce frames at anchor locations. Apply removable stop to cover anchor bolts.

7. Floor Anchors: Provide floor anchors for each jamb and mullion which extends to floor, formed of not less than 14 gage galvanized steel sheet, clip type anchors, with 2 holes to receive fasteners, welded to bottom of jambs and mullions.

8. Head Anchors: Provide 2 anchors at head of frames exceeding 42 inches wide frames mounted in drywall partitions.

9. Head Strut Supports: Provide 3/8-inch by 2-inch vertical steel struts extending from top of frame at each jamb to supporting construction above, unless frame is anchored to masonry or to other structural support at each jamb. Bend top of struts to provide flush contact for securing to supporting construction above. Provide adjustable bolted anchorage to frame jamb members.

10. Head Reinforcing: For frames over 4 feet-0 inch wide, in masonry openings, provide continuous steel channel or angle stiffener, not less than 12 gage for full width of opening, welded to back of frame at head.

11. Spreader Bars: Provide removable spreader bar across bottom of frames, tack welded to jambs and mullions.

12. Rubber Door Silencers: Drill stop to receive 3 silencers on single-door frames and 4 silencers on double-door frames. Install plastic plugs to keep holes clear during construction.

13. Product and Manufacturer: Provide one of the following:

a. Series F-14 by Pioneer Industries, Division of SOS Consolidated, Incorporated.

b. Or equal.

2.6 FIRE-RATED FRAMES

A. Provide the same construction specified above under frame construction and within UL and NFPA requirements as specified above.

B. Provide fire-rated frames with metal libels permanently fastened to the frame. Labels shall display all UL required information.

C. Provide fire-rated frames in accordance with UL Standards UL 10 (b) and UL 63 and NFPA Pamphlet No. 80 and as listed in UL.

D. Product and Manufacturer: Provide one of the following:

a. Series F-14 Underwriters' Label Frames by Pioneer Industries, Division of SOS Consolidated Incorporation.

2.7 STOPS AND MOULDINGS

A. Provide stops and mouldings around solid, glazed and louvered panels in hollow metal units and in frames to receive glass.

B. Form fixed stops and mouldings integral with frame. Provide fixed stops on inside of hollow metal units exposed to exterior and on corridor side of interior units.

C. Provide removable stops and molds at other locations, formed of not less than galvanized 20 gage steel sheets. Secure with countersunk machine screws spaced uniformly not more than 12 inches on center. Form corners with butted hairline joints.

D. Coordinate width of rabbet between fixed and removable stops with type of glass or panel and type of installation indicated.

PART 3 EXECUTION

3.1 INSPECTION

A. CONTRACTOR and his installer must examine the substrate and conditions under which hollow metal doors and frames are to be installed and notify ENGINEER in writing of any conditions detrimental to the proper and timely completion of the Work. Do not proceed with the Work until unsatisfactory conditions have been corrected in a manner acceptable to ENGINEER.

3.2 INSTALLATION

A. Install hollow metal units and accessories in accordance with the final Shop Drawings, manufacturer's data, and as shown and specified.

B. Place frames at fire-rated openings in accordance with NFPA StandardNo. 80.

C. Frames that are bowed, twisted or otherwise unacceptable shall be removed from the jobsite and replaced with properly constructed frames.

D. Setting Masonry Anchorage Devices:

1. In masonry construction, building in of anchors and grouting of frames is included in Section 4C1, Unit Masonry Construction.

2. Provide masonry anchorage devices and machine screws where required for securing hollow metal frames to masonry construction.

3. Set anchorage devices opposite each anchor location, in accordance with details on approved Shop Drawings and anchorage device manufacturer's instructions. Leave drilled holes rough, not reamed, and free from dust and debris.

4. Floor anchors may be set with powder-actuated fasteners instead of masonry anchorage devices and machine screws, if so shown on final Shop Drawings.

E. Secure frames to concrete framing with reinforcement concealed in hollow metal frames.

F. Placing Frames:

1. Set frames accurately in position, plumbed, aligned, and braced securely until permanent anchors are set. After wall construction is complete, remove temporary braces and spreaders leaving surfaces smooth and undamaged. Remove spreader bars only after frames have been properly set and secured.

2. Make field splices in frames as detailed on approved Shop Drawings, welded and finished to match factory Work.

G. Protective Coating: Protect inside, concealed, faces of door frames in plaster or masonry construction using fibered asphalt emulsion coating. Apply over shop primer approximately 1/8 inch thick and allow to dry before handling.

H. Door Installation:

1. Fit hollow metal doors accurately in their respective frames, with the following clearances:

a. Jambs and Head: 3/32 inch.

b. Meeting Edges, Pairs of Doors: 1/8 inch.

c. Bottom: 3/4 inch, where no threshold or carpet.

d. Bottom: At threshold, 1/8 inch.

2. Place fire-rated doors with clearances as specified in NFPA Standard No. 80.

3. Finish hardware installation is specified under Section 8H1, Finish Hardware.

3.3 ADJUSTMENT AND CLEANING

A. Final Adjustments: Check and readjust operating finish hardware items in hollow metal Work just prior to final inspection. Leave Work in complete and proper operating conditions.

B. Prime Coat Touch-Up: Immediately after erection, sand and apply touch-up of compatible air-drying primer.

C. Protection: Protect installed hollow metal doors and frames against damage from other construction work.

END OF SECTION 08110

SECTION 08300
OVERHEAD ROLLING DOORS

PART 1 GENERAL

1.1 SECTION INCLUDES

A. Furnish and install galvanized steel weatherstripped overhead rolling door with insulated slats, electric operator, control stations, starters, safety edge device and associated components.

1.2 RELATED SECTIONS:

1. Section 04200, Unit Masonry Construction.

2. Section 09900, Painting.

3. Section 16120, 600 Volt Cable.

1.3 QUALITY ASSURANCE

A. Design Criteria: Design and reinforce overhead rolling door to withstand a wind loading pressure 30 pounds per square foot.

B. Source Quality Control: Provide overhead rolling doors as complete units produced by a single manufacturer specializing in the production of this type of Work, including hardware, accessories, mounting and installation components.

C. Reference Standards: Comply with applicable provisions and recommendations of the following, except where otherwise shown or specified.

1. National Electrical Manufacturers Association (NEMA), Standard KS 1-1969.

1.4 SUBMITTALS

A. Shop Drawings: Submit for approval the following:

1. All components and installations as shown or specified.

2. Copies of manufacturer's specifications, roughing-in diagrams, and installation instructions for rolling door. Include manufacturer's data, operating instructions and maintenance data. Indicate by transmittal form that installer has received a copy of diagrams and installation instructions.

1.5 PRODUCT DELIVERY, STORAGE AND HANDLING

A. Delivery of Materials:

1. Deliver doors and frames cartoned or crated to provide protection during transit and job storage.

2. Inspect metal Work upon delivery for damage. Minor damage may be repaired provided the finish items are equal in all respects to new Work and acceptable to ENGINEER; otherwise, remove and replace damaged items as directed.

B. Storage of Materials: Store overhead rolling doors at the building site under cover. Place units up off the floors in a manner that will prevent rust and damage. Avoid the use of non-vented plastic or canvas shelters which could create a humidity chamber.

PART 2 PRODUCTS

2.1 MATERIALS

A. Door Curtain:

1. Door Curtain Slats: Fabricate overhead rolling door curtain of flat interlocking slats designed to withstand the specified wind loading but not less than 20 gage galvanized steel, of continuous length for the width of the door without splices. Unless otherwise shown or specified, provide slats of the material gage recommended by the door manufacturer for the size and type of door and finish required, as follows:

   a. Galvanized Steel Door Curtain Slats: Provide double face slats, 5/8-inch thick, with galvanized finish.

   b. Provide slats completely filled with glass fiber reinforced polyisocyanurate foam plastic with aluminum foil facers with a minimum "R" valve of 5.0 and UL Flame Spread 25 maximum.

2. Windlocks: Provide continuous internal bent lock bar. Fit both sides of guide with flexible strip.

3. Bottom Bar: Furnish bottom bar consisting of two galvanized steel angles, each not less than 1-1/2-inches by 1-1/2-inches by 1/8-inch thick.

B. Curtain Jamb Guides:

1. Fabricate curtain jamb guides of galvanized steel with sufficient depth and strength to retain the curtain against specified wind loading. Build-up units with minimum 3/16-inch thick steel sections complying with ASTM A-36. Slot bolt holes for track adjustment.

2. Secure continuous galvanized steel wall angle to wall framing by 3/8-inch minimum stainless steel bolts at not more than 30 inches of center, unless otherwise recommended by door manufacturer. Extend wall angles above door opening head to support coil brackets, unless otherwise shown. Place anchor bolts on exterior wall guides so that they are concealed when door is in closed position. Provide removable stops on guides to prevent overtravel of curtain.

C. Weather Seals:

1. Provide natural rubber or neoprene rubber weatherstripping for exterior doors. Secure weather seals with continuous metal pressure bars. At door heads, use a 1/8-inch thick continuous sheet secured to the inside of the curtain coil hood. At door jambs, use a 1/8-inch thick continuous strip secured to the exterior side of the jamb guide.

2. Provide double guide weatherstripping which when tested at 1.30 pounds per square foot pressure differential allows 3.75 cubic feet per minute air infiltration per linear foot of overhead rolling door perimeter maximum.

3. Provide weatherstripping around all edges of door, including hood baffle, astragal, and guide weatherstripping.

D. Counterbalancing Mechanism:

1. Counterbalance doors by means of an adjustable steel helical torsion spring mounted around a galvanized steel shaft and mounted in a spring barrel and connected to the door curtain with the required barrel rings. Use grease-sealed ball bearings or self-lubricating graphite bearings for all rotating members.

2. Counterbalance Barrel:

a. Fabricate spring barrel of hot-formed structural quality carbon steel, welded or seamless pipe, of sufficient diameter and wall thickness to support the roll-up of curtain without distortion of slats and limit barrel deflection to not more than 0.03 inch per foot of span under full load.

b. Provide spring balance of one or more oil-tempered, heattreated steel helical torsion springs. Size springs to counterbalance the weight of the curtain, with uniform adjustment accessible from outside barrel. Provide cast steel barrel plugs to secure ends of springs to the barrel and the shaft.

c. Fabricate torsion rod for counterbalance shaft of casehardened steel, of required size to hold the fixed spring ends and carry the torsional load.

3. Brackets: Provide mounting brackets of manufacturer's standard design, of cold-rolled stainless steel plate with bell-mouth guide groove for curtain.

4. Hood:

a. Form to entirely enclose coiled curtain and operating mechanism at opening head, and act as a weather seal. Contour to suit end brackets to which hood is attached. Roll and reinforce top and bottom edges for stiffness. Provide closed ends for surface-mounted hoods, and any portion of between jamb mounting projecting beyond wall face. Provide intermediate support brackets as required to prevent sag.

b. Fabricate hoods of 16 gage galvanized steel sheet with prime coat compatible with finish specified in Section 09900, Painting.

E. Product and Manufacturer: Provide one of the following:

1. AIR-BAR Door with AIR-BAR F3B Flat Slat by North American Rolling Door Incorporated.

2.2 ACCESSORIES

A. Electric Door Operator:

1. General: Furnish electric door operator assembly of the size and capacity recommended and provided by the door manufacturer; complete with electric motor and factory-prewired motor controls, including starter, gear reduction unit, solenoid operated brake, clutch, remote control stations, and control devices and wiring.

2. Provide a hand-operated disconnect or a mechanism for automatically engaging a sprocket and chain operator and releasing brake for emergency manual operation. Mount disconnect and operator so that they are accessible from floor level. Include an interlock device to automatically prevent the motor from operating when emergency operator is engaged.

3. Design operator so that motor may be removed without disturbing the limit-switch adjustment and without affecting the emergency auxiliary operator.

4. Door Operator Type:

   a. Provide wall or bracket-mounted door operator units consisting of an electric motor, a worm gear drive from motor to reduction gear box, a chain or worm gear drive from reduction box to a gear wheel mounted on the counterbalance shaft, and a quick-clutch disconnect-release for manual operation.

   b. Provide motor, clutch, and drive assembly of horsepower and design as determined by the door manufacturer for the size of door required and as herein specified.

5. Electric Motor:

   a. Provide high-starting torque, reversible, constant duty, Class A insulated electric motors with overload protection.

   b. Provide maximum 1 horsepower motor suitable for 480 volt 3-phase supply or motor sized by manufacturer, sized to move door in either direction, from any position, at not less than 8 inches nor more than 12 inches per second.

c. Coordinate wiring requirements and current characteristics of motors with the building electrical system; see Division 16 Sections of these Specifications.

d. Provide totally enclosed, fan cooled (TEFC) type, waterproof electric motor, fitted with a plugged drain.

6. Remote Control Station:

a. Unless otherwise shown, provide momentary-contact, 3-button control station with push button controls labeled "open", "close" and "stop".

b. Provide interior units, full-guarded type, surface-mounted, heavy-duty, with NEMA 4X enclosure, key operated.

7. Safety Edge Device:

a. Provide overhead rolling door with an electric safety switch, extending full width of the door bottom, and located within a U-shaped neoprene or rubber astragal mounted to the bottom door rail.

b. Design the unit to operate such that contact with the switch before fully closing will immediately stop the downward travel and reverse the direction to the fully opened position.

c. Connect to the control circuit through a retracting safety cord.

d. The compressible strip shall also serve as a weatherseal along the bottom of the door.

2.3 PAINTING

A. Shop clean and prime all ferrous metal and galvanized surfaces, exposed and unexposed, except lubricated surfaces, with door manufacturer's standard rust inhibitive primer drying to a flat sheen.

B. Refer to Section 09900, Painting, to coordinate shop and field prime and finish paint of interior and exterior ferrous and non-ferrous metals.

PART 3 EXECUTION

3.1 INSPECTION

A. Examine the substrates and conditions under which the Work is to be installed and notify the ENGINEER in writing of conditions detrimental to the proper and timely completion of the Work. Do not proceed with the Work until unsatisfactory conditions have been corrected in a manner acceptable to the ENGINEER.

3.2 INSTALLATION

A. Install, wire, connect and adjust doors, motors, starters, pushbutton stations, limit and safety switches and all other electrical accessories and connections required in full accordance with the manufacturer's written instructions, the approved Shop Drawings and as shown and specified.

3.3 FIELD QUALITY CONTROL

A. Upon completion of installation including the work by other trades, test and adjust doors to operate easily, free from warp, twist or distortion.

B. Test the door in presence of the ENGINEER to demonstrate compliance with the Specifications and the manufacturers design criteria.

3.4 ADJUSTMENT AND CLEANING

A. Adjust mechanism so moving parts operate smoothly.

B. Repair damage, and rolling doors, and match manufacturer's original finish.

C. Leave work area clean and free of debris.

END OF SECTION 08300

SECTION 08710
DOOR HARDWARE

PART 1 GENERAL

1. 1 SECTION INCLUDES

A. Furnish and install all door hardware. Door hardware is defined to include all items known commercially as finish hardware, as required for swing doors, except special types of unique and non-matching hardware specified in the same Section as the door and door frame.

B. The types of finish hardware Work required includes, but is not necessarily limited to, the following:

a. Mortise hinges.

b. Locksets.

c. Latchsets.

d. Panic exit devices.

e. Door closers.

f. Overhead holders and stops.

g. Stops.

h. Silencers.

i. Stripping and seals.

j. Thresholds.

k. Miscellaneous items.

1.2 RELATED SECTIONS

1. Section 08110, Hollow Metal Doors and Frames.
2. Section 08300, Overhead Rolling Doors.

1.3 QUALITY ASSURANCE

A. Supplier Qualifications: The finish hardware supplier shall have in his employ a member of the American Society of Architectural Hardware Consultants who shall be responsible for checking and supervising the complete finish hardware installation.

B. Design Criteria:

1. Where the finish, shape, size or function of a member receiving finish hardware is such as to prevent the use of, or make unsuitable the types specified, furnish similar types having as nearly as practicable the same operation.

2. If finish hardware for any location is not specified, provide finish hardware equal in design and quality to adjacent finish hardware for comparable openings.

3. Furnish finish hardware items of proper design for use on doors and frames of the thickness, profile, swing, security and similar requirements, as necessary for proper installation and function.

4. Unless otherwise specified, comply with the National Builders Hardware Association, "Recommended Locations for Builders Hardware".

5. Provide stainless steel finish hardware, or matching finish hardware as specified, for all doors and frames.

C. Requirements of Regulatory Agencies:

1. Provide finish hardware for fire-rated openings in compliance with NFPA No. 80. This requirement takes precedence over other requirements for such finish hardware.

2. Provide only finish hardware which has been tested, listed and labeled by UL for the types and sizes of doors required, and complies with the requirements of the door and door frame labels. Modify scheduled finish hardware, as required, to meet UL requirements.

3. Codes: Comply with the applicable requirements of governing authorities and codes for the types of finish hardware specified.

D. Source Quality Control: To the greatest extent possible, obtain each type of finish hardware from only one manufacturer.

E. Reference Standards: Comply with the applicable provisions and recommendations of the following except where otherwise shown or specified:

1. FS TT-S-001657, Sealing Compound - Single Component, Butyl Rubber Based, Solvent Release Type.

2. National Fire Protection Association, Standard for Fire Doors and Windows No. 80.

3. UL, Building Materials Directory.

4. UL, List of Inspected Fire Protection Equipment and Materials.

5. UL, Hardware, Automatic Flush or Surface Bolts.

6. National Builders Hardware Association, Recommended Locations for Builders Hardware.

1.4 SUBMITTALS

A. Samples: Submit for approval each item of finished hardware with specified finish.

B. Shop Drawings: Submit for approval the following:

1. Copies of manufacturer's data for each item of finish hardware. Include whatever information may be necessary to show compliance with requirements, and include instructions for installation and for maintenance of operating parts and exposed finishes. Wherever needed, furnish templates to fabricators of other work which is to receive finish hardware.

2. Copies of the finish hardware schedule. Include a separate key schedule, showing clearly how final instructions on keying of locks have been fulfilled. Finish hardware schedules are intended for coordination of the Work. Review and acceptance by ENGINEER does not relieve CONTRACTOR of his exclusive responsibility to fulfill the requirements as shown and specified.

3. Based on the finish hardware requirements specified, organize the final finish hardware schedule into "hardware sets," indicating complete designation of every item required for each door or opening. Furnish initial draft of schedule at the earliest possible date, in order to facilitate the fabrication of other work (such as hollow metal frames) which may be critical in the Project construction schedule. Furnish final draft of schedule after samples, manufacturer's data sheets, coordination with Shop Drawings for other work, delivery schedules and

similar information have been completed and accepted.

4. Maintenance Manual: Upon completion of the Work, furnish copies of detailed maintenance manual including the following information:

   a. Product names and numbers.

   b. Name, address and telephone number of manufacturer and local distributor.

   c. Complete repair, installation and parts manuals for all items.

   d. Detailed procedures for routine maintenance and cleaning.

   e. Detailed procedures for light repairs such as dents, scratches and staining.

5. Complete information on required maintenance tools to be furnished as recommended by the finish hardware manufacturer.

1.5 PRODUCT DELIVERY, STORAGE AND HANDLING

A. Delivery of Materials:

1. Deliver finish hardware sufficiently in advance of its setting for proper inspection.

2. Pack each piece of finish hardware separately, complete with screws, keying, instructions and templates, tagged to correspond with the approved finish hardware schedule.

B. Storage of Materials:

1. Provide secure lock-up for finish hardware stored at the site, but not yet installed.

2. Store finish hardware in manufacturers' original packages.

C. Handling of Materials: Control the handling and installation of finish hardware items which are not immediately replaceable, so that the completion of the Work will not be delayed by finish hardware losses, both before and after installation.

1.6 JOB CONDITIONS

A. Scheduling: Deliver individually packaged finish hardware items at the proper time to the proper locations for installation.

1.7 SUBSTITUTIONS

A. Do not make substitutions after ENGINEER's approval of final finish hardware schedule.

B. Clearly identify all proposed substitutions and provide complete comparative data with specified product at time of Shop Drawing submission.

PART 2 PRODUCTS

2.1 MATERIALS AND FABRICATION

A. General:

1. Hand of Door: The Drawings show the swing or hand of each door leaf (left, right, reverse bevel, etc.). Furnish each item of finish hardware for proper installation and operation of the door swing as shown.

2. Manufacturer's Name Plate: Do not use manufacturer's products which have manufacturer's name or trade name displayed in a visible location (omit removable nameplates), except in conjunction with required UL labels.

3. Base Metals: Produce finish hardware units of the basic metal and forming method specified, using the manufacturer's standard metal alloy, composition, temper and hardness. Do not substitute materials or forming methods for those specified.

4. Fasteners: Manufacture finish hardware to conform to published templates, generally prepared for machine screw installation. Do not provide finish hardware which has been prepared for selftapping sheet metal screws, except as specifically indicated.

5. Furnish screws for installation, with each finish hardware item. Provide Phillips flat-head screws except as otherwise specified. Finish exposed (exposed under any condition) screws to match the hardware finish or, if exposed in surfaces on other Work, to match the finish of such other Work as closely as possible, including "prepared for paint" in surfaces to receive painted finish.

6. Provide fasteners which are compatible with both the unit fastened and the substrate, and which will not cause corrosion or deterioration of finish hardware, base material or fastener.

7. Provide concealed fasteners for finish hardware units which are not exposed when the door is closed, except to the extent no standard manufacturer units of the type specified are available with concealed fasteners. Do not use through bolts for installation where the bolt head or the nut on the opposite face is exposed in other Work under any condition, except where it is not possible to adequately reinforce the Work and use machine screws or concealed fasteners of another standard type to satisfactorily avoid the use of through bolts.

8. Tools for Maintenance: Furnish a complete set of specialized tools as needed for ENGINEER's continued adjustment, maintenance, removal and replacement of finish hardware.

B. Mortise Hinges: Provide all doors with mortise hinges unless specifically scheduled as receiving pivot hinges:

1. Templates and Screws: Provide only template-produced units.

2. Base Metal: Fabricate hinges from stainless steel and finish to match the latch and lock set.

3. Number of Hinges: Except as otherwise specified, provide 2 hinges on each door leaf of less than 60-inches height; provide one additional hinge for next 30-inches of door height; provide two additional hinges for each 30-inches or fraction thereof for doors above 90-inches tall.

4. Hinge Size: Except as otherwise specified or as required to comply with UL and NFPA, provide hinges of the following sizes:

   a. Interior and Exterior Doors, maximum 36-inches wide: 4-1/2 inch heavy weight (0.180-inch). b. Wide Exterior and Interior Doors:

      1) Maximum 47-inches Wide: 5-inch heavy weight (0.190 inch).

      2) 48-inches Wide and Over: 6-inch heavy weight (0.203 inch).

5. Types of Hinges: Provide full-mortise type, ball-bearing hinges swaged for mortise applications, inner leaf beveled, square cornered, unless manufacturer's recommendations indicate that half-mortise, half-surface, full-surface or other type should be used for the frame and door type or condition.

6. Hinge Pins: Except as otherwise specified, provide hinge pins as follows:

   a. Pins: Stainless steel.

   b. Exterior Doors: Non-removable pins.

   c. Tips: Hospital tips and matching plug, finished to match leaves.

7. Product and Manufacturer: Provide one of the following:

   a. FBB 199H by The Stanley Works.

   b. T4B3386H by McKinney Manufacturing Company.

8. Comply with UL, List of Inspected Fire Protection Equipment and Materials and NFPA No. 80 requirements.

C. Mortise Locks and Latch Sets:

1. Strikes: Provide manufacturer's standard wrought box strike, for each location and use shown. Provide stainless steel curved lip strikes, unless otherwise recommended by manufacturer, finished to match lock or latch set trim.

2. Lock Throw: Provide minimum of 3/4-inch anti-friction latch bolt and 1-inch dead bolt throw wherever available on manufacturer's functions specified. Comply with UL requirements for throw of latchbolts and deadbolts on fire-rated openings.

3. Materials: Provide the following materials: a. Latch Bolt: Stainless steel. b. Dead Bolt: Stainless steel. c. Case: Heavy gage steel with corrosion resistant finish. d. Hub: Stainless steel. e. Scalp: Bronze finished to match trim specified. f. All components shall be of marine quality wherever possible.

4. Backset: Provide minimum backset of 2-3/4-inches.

5. Modify specified locks and latches to comply with UL, Building Materials Directory, and List of Inspected Fire Protection Equipment and Materials and NFPA No. 80 requirements.

6. Finish: US 32D stainless steel.

7. Product and Manufacturer: Provide one of the following:

a. Heavy-Duty Mortise Lock 9700 Series 773L Design with LE2 Escutcheon (US 32D) by Corbin Division of Emhart Corporation.

b. Heavy-Duty Mortise Lock A7000 Series LusMo-LE (US 32D) by Russwin, Division of Emhart Corporation.

D. Panic Exit Devices:

1. Strikes: Provide manufacturer's standard wrought steel open back strikes for each location and use shown to allow independent opening and closing of each leaf of double doors with panic exit devices. Comply with UL, List of Inspected Fire Protection Equipment and Materials and NFPA No. 80 requirements.

2. Exit Doors: Where required by governing regulations or where shown or scheduled, provide panic exit devices, of the type required.

3. Fire Doors: Where shown or specified as a fire-rated door, provide units listed and labeled by UL to comply with the rating and size of door shown.

4. Lock Throws: Provide minimum of 3/4-inch latch bolt throw.

5. Provide surface mounted vertical rod type exit device and mortise type exit devices as specified.

6. Provide the following materials:

a. Latch Bolt: Brass.

b. Case: Heavy gage chrome plated steel.

c. Cylinders: Bronze.

d. Front: Heavy gage steel.

e. Chassis: Brass.

f. Crossbar: Stainless steel, 0.062-inches minimum thickness, with steel reinforcing tube.

g. Surface Mounted Bolts: Minimum 1/2-inch diameter stainless steel.

7. Backset: Provide minimum backset of 2-3/4-inches.

8. Finish: US 32D stainless steel.

9. Product and Manufacturer: Provide one of the following:

   a. 3126 1/2 for single doors and 3126 1/2 x 3245U-73 for double doors 31MG Design (US 32D) by Corbin Division of Emhart Corporation.

   b. 796 1/2 for single doors and 796 1/2 x U771-73 for double doors 7415 Modera (US 32D) by Russwin Division of Emhart Corporation.

E. Cylinders and Keying System:

1. Review the keying system with CONTRACTOR and provide the type required (master, grandmaster or greatgrandmaster).

2. Equip all locks with manufacturer's special 6-pin tumbler cylinder, with construction master key feature, which permits voiding of construction keys without cylinder removal.

3. Comply with the ENGINEER's instructions for masterkeying and, except as otherwise specified, provide individual change key for each lock which is not designated to be keyed alike with a group of related locks.

4. Key Material: Provide keys of nickel silver only.

5. Key Quantity: Furnish 3 keys for each lock and each master and grandmaster system. Provide one extra key blank for each lock.

6. Provide a key control system including envelopes, labels, tags with self-locking key clips, receipt forms, 3-way visible card index, temporary markers, permanent markers and standard metal cabinet, all as recommended by system manufacturer, with capacity for 150 percent of the number of locks required for the project. Provide a hinged-panel type cabinet, for wall mounting.

F. Door Closers:

1. Provide all doors, both active and inactive, with door closers, unless otherwise specified.

2. Size of Units: Except as otherwise specified, comply with the manufacturer's recommendations for size of door control unit, depending upon size of door, exposure to weather, and anticipated frequency of use.

3. Where parallel arms are specified, and for closers on exterior doors, provide closer unit one size larger than recommended for use with standard arms.

4. Use parallel arm arrangement for doors that would otherwise have the door closer appearing in finished corridors or entries.

5. Modify closers specified as required to comply with UL, Building Materials Directory, and List of Inspected Fire Protection Equipment and Materials, and NFPA No. 80 for doors requiring door closers.

6. Provide hold open feature for all non-fire rated doors unless otherwise specified.

7. Select all arms to clear weatherstripping, and overhead door holders.

8. Provide long arm to allow door to swing 180 degrees where long arm will eliminate floor mounted stops and as shown.

9. Provide closers with spring power adjustment feature capable of increasing spring power 50 percent minimum in all closer sizes.

10. Provide closer with delayed closing action feature. Position valve at top of closer.

11. Provide individual regulating valves for closing and latching speeds, and separate adjustable backcheck valve.

12. Material: Provide the following materials: a. Metallic Cover: Aluminum US 27. b. Case: Cast iron. c. Other Parts: Steel.

13. Finish: Color coordinate all arms and other accessories.

14. Product and Manufacturer: Provide one of the following:

    a. 110 Series Door Closers by Corbin, Division of Emhart Corporation.

    b. DA 2810 Series Door Closers by Russwin, Division of Emhart Corporation.

G. Holders and Stops:

1. Provide concealed overhead holders and stops on all exterior doors and as specified; with hold open feature. Comply with UL and NFPA requirements.

2. Material: Provide the following materials: a. Shock Absorber Spring: Heavy tempered steel. b. All other Parts: Extruded bronze.

3. Coordinate placement of overhead holder and stop with arm and bracket selection for door closers, for non-interference.

4. Two types of holders and stops are required as follows:

   a. For all door leaves with maximum width of 3 foot-0 inches provide the following:

      1) Product and Manufacturer: Provide one of the following:

         a) GJlOOA Series Heavy Duty Concealed Overhead Door Holder by Glynn Johnson Corporation.

   b. For all door leaves wider than 3 foot-O inches provide the following:

      1) Design extra heavy-duty surface mounted door holders and connections where they are fastened to other materials, to resist a superimposed load of 30 pounds per square foot acting on the plane of the doors.

      2) Provide extra heavy-duty units at head of each leaf which shall engage and release door automatically by roller cam action with a provision at the end of the arm to regulate the hold-open tension or place it in a neutral position.

      3) Provide 3/4-inch diameter steel arm, all other parts shall be cast bronze.

      4) Provide all manufacturer recommended door reinforcements and coordinate the furnishing of hardware templates required for the installation of the units.

      5) Finish: US 32D stainless steel.

      6) Product and Manufacturer: Provide one of the following:

         a) GJ79HD by Glynn-Johnson Division of Dayton-Walther Corporation.

H. Stops:

1. All doors shall have stops. Provide wall stops for all interior doors wherever possible. Provide long arms on closers where possible in order to avoid use of floor stops.

2. Materials: Chassis with grey rubber tip.

3. Finish: US 3S 32D stainless steel.

4. Provide concealed stainless steel fasteners as required by the substrate.

5. Product and Manufacturer: Provide one of the following:

   a. WB60MX wall mounted concave series type series by Glynn Johnson Division of Dayton-Walther Corporation.

I. Stripping and Seals:

1. Provide perimeter weather stripping at all exterior doors and as specified.

2. Continuity of Stripping: Except as otherwise specified, it is required that the stripping at each opening be continuous and without unnecessary interruptions at door corners and hardware.

3. Replaceable Seal Strips: It is required that the resilient or flexible seal strip of every unit be easily replaceable and readily available from stocks maintained by the manufacturer.

4. Provide bumper type weather stripping at jambs and head, including a resilient insert and metal retainer strip, surface-applied, of the following metal, finish and resilient bumper material:

   a. Housing: Extruded aluminum with clear anodized finish; 0.062-inch minimum thickness of main walls and flanges.

   b. Seals: Closed cell extruded sponge neoprene.

5. Product and Manufacturer: Provide one of the following:

   a. No. 350CSR by Pemko Manufacturing Company.

6. Provide automatic drop-seal sound-stripping door-bottom unit of manufacturer's standard design, with operating seal bar of the following material, retained in an extruded metal bar, and capable of operating to close a 3/4-inch gap (from door bottom to floor or threshold). House mechanism and operating bar in the following metal housing, for mounting on doors as follows:

   a. Housing: Extruded aluminum, 0.062-inch thick, with clear anodized finish on exposed surfaces.

   b. Seal: Closed-cell sponge neoprene.

   c. Mounting: Semi-montise mounted. Mount on stop-face of doors, except mount on hinge-face of swing-in exterior doors.

7. Product and Manufacturer: Provide one of the following:

   a. No. 430CMR by Pemko Manufacturing Company.

J. Thresholds:

1. Provide thresholds on all exterior doors. Interior doors shall be provided with thresholds as scheduled.

2. Metal: Extruded aluminum.

3. Surface Pattern: Grooved tread, manufacturer's standard.

4. Provide countersunk bronze screws and expansion shields.

5. Width: 5-inches wide and full width of opening.

6. Construction:

   a. Single-piece, complying with manufacturer's recommendations.

7. Profile: Provide manufacturer's standard unit which conforms with the minimum size and profile requirements specified.

   a. For doors equipped with panic hardware, including floor bolts, provide profile with stop bar of proper size and shape to function as the strike plate for the floor bolts.

8. Thickness: 1/4-inch minimum.

9. Product and Manufacturer: Provide one of the following:

a. 171 and 227 with 196 by Pemko Manufacturing Company.

K. Silencers:

1. Provide silencers for all non-fire rated door frames.

2. Product and Manufacturer: Provide one of the following:

a. No. 3446 by Sargent and Company.

L. Sealants: Provide butyl rubber sealant complying with FS TT-S-001657 for use with thresholds.

2.2 HARDWARE FINISHES

A. Provide matching finishes for finish hardware units at each door or opening, to the greatest extent possible. Reduce differences in color and textures as much as commercially possible where the base metal or metal forming process is different for individual units of finish hardware exposed at the same door or opening. In general, match all items to the manufacturer's standard finish for the latch and lock set for color and texture.

PART 3 EXECUTION

3.1 INSPECTION

A. CONTRACTOR (and/or his installer) shall examine the substrate to receive finish hardware, and ascertain the conditions under which the Work will be performed, and notify ENGINEER in writing of unsatisfactory conditions. Do not proceed with the finish hardware Work until unsatisfactory conditions have been corrected in a manner acceptable to ENGINEER.

3.2 PREPARATION

A. Templates: Furnish finish hardware templates to each fabricator of doors, frames and other work to be factory-prepared for the installation of finish hardware. Upon request, check the Shop Drawings of such other work, to confirm that adequate provisions are made for the proper installation of the finish hardware.

3.3 INSTALLATION

A. Mount finish hardware units at heights recommended in, "Recommended Locations for Builders' Hardware," by National Builders Hardware Association, except as otherwise specified or required to comply with governing regulations.

B. Install each finish hardware item in compliance with the manufacturer's instructions and recommendations. Wherever cutting and fitting is required to install finish hardware onto or into surfaces which are later to be painted or finished in another way, install each item completely and then remove and store in a secure place during the finish application. After completion of the finishes, re-install each item. Do not install surface-mounted items until finishes have been completed on the substrate.

C. Set units level, plumb and true to line and location. Adjust and reinforce the attachment substrate as necessary for proper installation and operation.

D. Drill and countersink units which are not factory-prepared for anchorage fasteners. Space fasteners and anchors in accordance with industry standards.

E. Cut and fit threshold and floor covers to profile of door frames, with mitered corners and hair-line joints. Join units with concealed welds or concealed mechanical joints. Cut smooth openings for spindles, bolts and similar items, if any.

F. Screw thresholds to substrate with No. 10 or larger bronze screws, of the proper type for permanent anchorage.

G. Set thresholds in a bead of butyl rubber sealant to completely fill concealed voids and exclude moisture from every source. Do not plug drainage holes or block weeps. Remove excess sealant.

3.4 ADJUSTMENT AND CLEANING

A. Adjust and check each operating item of finish hardware and each door, to ensure proper operation or function of every unit. Lubricate moving parts with the type lubrication recommended by manufacturer (graphite-type if no other recommended). Replace units which cannot be adjusted and lubricated to operate freely and smoothly as intended for the application.

B. Final Adjustment: Where finish hardware installation is made more than one month prior to Final Acceptance or occupancy of a space or area, return to the Work during the week prior to Final Acceptance or occupancy, and make a final check and adjustment of all finish hardware items in such space or area. Clean and relubricate operating items as necessary to restore proper function and finish of finish

hardware and doors. Adjust door control devices to compensate for final operating of heating and ventilating equipment.

C. Instruct OWNER's personnel in proper adjustment and maintenance of finish hardware during the final adjustment of finish hardware.

D. Finish hardware which is blemished or defective will be rejected even though it was set in place before defects were discovered. Remove and replace with new finish hardware. Repair all resultant damage to other work.

E. Continued Maintenance Service: Approximately 6 months after the acceptance of finish hardware in each area, the installer, accompanied by the representative of the latch and lock manufacturer, shall return to the project and re-adjust every item of hardware to restore proper function of doors and finish hardware. Consult with and instruct OWNER's personnel in recommended additions to the maintenance procedures. Clean and lubricate operational items wherever required. Replace finish hardware items which have deteriorated or failed due to faulty design, materials or installation of finish hardware units. Prepare a written report of current and predictable problems (of substantial nature) in the performance of the finish hardware.

3.5 SCHEDULES

A. Scheduled items for each door are generic and rely on information specified above. The listing of hardware types provided is only a general guideline for the final finish hardware schedule. CONTRACTOR shall submit a finish hardware schedule acceptable to all codes and testing agencies.

END OF SECTION 08710

SECTION 09880
PROTECTIVE CONCRETE COATINGS

PART 1 GENERAL

1.1 SECTION INCLUDES

A. Furnish and install all concrete toppings in the equipment areas.

1.2 COORDINATION

A. Coordinate and schedule sandblasting of substrates before equipment and similar items are installed to avoid later difficulty or delay in performing the Work of this section.

B. Coordinate the protection of existing equipment to remain in place during substrate preparation.

C. Review installation procedures under other Sections and coordinate the installation of items that must be installed with the concrete toppings.

D. Coordinate the finishing of substrates for acceptability of substrates to concrete toppings manufacturers.

E. Coordinate floor drain mounting heights and types. Provide floor drain type which accommodates 1/4-inch thick concrete floor toppings.

F. Remove all chemicals, compounds and other materials from substrates to receive the Work of this Section, as may be required by the concrete toppings manufacturers, at no additional expense to OWNER even if chemicals, compounds and other materials are permitted by other Sections of this Specification.

1.3 RELATED SECTIONS

1. Section 03300, Cast-In-Place Concrete.

1.2 QUALITY ASSURANCE

A. Applicator Qualifications: Certified or licensed by the flooring materials manufacturer.

B. Source Quality Control: Provide each component of concrete topping produced by a single manufacturer, including recommended primers (if any), base coat, aggregate, and top coat materials.

C. Allowable Tolerances: Provide the following:

1. Finished toppings level to 1/8 inch in 10 feet-O inches.

2. Smooth, continuous color with no color streaks or inconsistencies.

3. Uniformly textured non-slip finish.

D. Reference Standards: Comply with applicable provisions and recommendations of the following except as otherwise shown or specified.

1. ASTM C 109, Compressive Strength of Hydraulic Cement Mortars.

2. ASTM C 150, Portland Cement.

3. ASTM C 190, Tensile Strength of Hydraulic Cement Mortars.

4. ASTM C 321, Bond Strength of Chemical-Resistant Mortars.

5. ASTM C 501, Relative Resistance to Wear of Unglazed Ceramic Tile by the Taber Abraser.

6. ASTM D 696, Test for Coefficient of Linear Thermal Expansion of Plastics.

7. ASTM D 790, Test of Flexural Properties of Plastics.

8. ASTM D 1308, Effect of Household Chemicals on Clear and Pigmented Organic Finishes.

9. ASTM D 2240, Rubber Property-Durometer Hardness.

10. ASTM E 84, Surface Burning Characteristics of Building Materials.

11. Military Specification, MIL-3134F.

1.5 SUBMITTALS

A. Samples: Submit for approval the following:

1. 12-inch by 12-inch samples of each type of concrete toppings on plywood. Show range of color and pattern variation. Sample submittals will be reviewed for color, texture, and pattern only. Compliance with all other requirements is the exclusive responsibility of CONTRACTOR.

2. After samples have been approved, a sample of concrete toppings shall be applied to floor areas selected by ENGINEER. Upon acceptance by ENGINEER, the samples shall be the standard by which all Work shall be compared.

B. Shop Drawings: Submit for approval the following:

1. Show floor plans indicating where concrete toppings occurs in each space. Show interface details with other items occurring in the spaces such as thresholds, floor drains, coves, equipment pads and trench drains or horizontal pipe chases.

2. Copies of manufacturer's technical data and installation instructions for concrete topping required.

3. Maintenance Manual: Copies of manufacturer's written instructions for recommended maintenance practices.

4. Test Reports: Copies of test data from an independent testing laboratory for all the physical properties listed herein.

1.6 PRODUCT DELIVERY, STORAGE AND HANDLING

A. Delivery of Materials:

1. Deliver material in manufacturer's original unopened and undamaged packages.

2. Clearly identify manufacturer, brand name, contents, color stock number, and order number on each package.

3. Packages showing indications of damage that may affect condition of contents are not acceptable.

B. Storage of Materials:

1. Store in original packaging under protective cover and protect from damage.

2. Stack containers in accordance with manufacturer's recommendations.

C. Handling of Materials: Handle materials in such a manner as to prevent damage to products or finishes.

1.7 JOB CONDITIONS

A. Environmental Requirements:

1. Maintain substrate temperature and room temperature before, during and after installation above 50° F and in accordance with flooring material manufacturer's instructions.

2. Provide adequate ventilation during application and curing periods.

B. Scheduling:

1. Schedule the installation of concrete topping Work in order to provide concrete topping on top of equipment pads, within horizontal pipe chases and similar locations where installation of equipment, piping and similar items would cause concrete topping installation difficulties, before such equipment, piping and similar items which would preclude later installation of concrete topping have been installed.

2. Provide all temporary heat and shelters as may be required to schedule the installation of concrete topping Work at no additional expense to OWNER.

PART 2 PRODUCTS

2.1 MATERIALS

A. Chemical Resistant Concrete Topping: Provide the following chemical resistant topping all individual components of which shall be capable of and recommended by the manufacturer for immersion in the reagent specified for one year without loss of specified properties or color.

1. Acid Etch: Provide manufacturer's recommended acid etching compound in addition to sandblast surface preparation.

2. Bond Coat: As recommended by the manufacturer.

3. Aggregate: Acid resistant granite chips.

4. Reinforcement: Provide a glass reinforced system using materials recommended for the system and chemical resistance specified. Provide Type H glass cloth.

5. Underlayment Fill: As recommended by the manufacturer.

6. Binder: Troweled vinyl ester composition flooring.

7. Top Coats: Non-slip with complete selection of manufacturer's top coats for maximum chemical resistant.

8. Termination Strips: White metal, tapered bar type as recommended by the manufacturer.

9. Physical Properties: The complete installation when thoroughly cured shall have the following physical properties:

   a. Tensile Strength, ASTM D 638: 13,000 pounds per square inch minimum.

   b. Indentation, MIL-D-3134F, PAR. 4.7.3: 0.062 inches maximum.

   c. Bond Strength, ASTM C 321: 300 pounds per square inch minimum.

   d. Flame Spread, ASTM D 635: Self-extinguishing.

   e. Thermal Coefficient of Linear Expansion, ASTM C 531: 7.2 by 10 inches per inch per ·F maximum.

   f. Abrasive Resistance, ASTM C 501: 27 wear index.

   g. Flexural Strength, ASTM C 580: 22,000 pounds per square inch minimum.

   h. Compressive Strength, ASTM C 109: 16,000 pounds per square inch minimum.

   i. Surface Hardness, ASTM D 2240: Scale "D" 77.

   j. Water Absorption, MIL-D-3134, 4.78: 0.12.

   k. Chemical Resistance, ASTM D 1308:

Reagent	Film Integrity
50% Sodium Hydroxide	Unaffected
93% Sulfuric Acid (Spills Only)	Unaffected
35% Hydrogen Peroxide (Spills Only)	Unaffected

10. Color: Provide manufacturer's standard color Dark Grey 852.

11. Texture: Non-slip surface.

12. Product and Manufacturer: Provide one of the following:

    a. Ceilcrete 6650 Vinyl Ester Flooring by the Ceilcote Company.

    b. DR3116 Vinyl Ester Trafficote #16 by General Polymers Corporation.

PART 3 EXECUTION

3.1 INSPECTION

A. CONTRACTOR (and/or his installer) shall examine the areas and conditions under which concrete toppings are to be placed and notify ENGINEER in writing of conditions detrimental to the proper and timely completion of the Work. Do not proceed with the Work until unsatisfactory conditions have been corrected in a manner acceptable to ENGINEER.

B. Subfloor shall have a wood float finish. Concrete shall have cured for 28 days prior to initiation of this Work.

3.2 PREPARATION

A. Subfloors: Prior to start of applying flooring, broom clean or vacuum surfaces to be covered and inspect the subfloor. Start of application operations will indicate acceptance of subfloor conditions and full responsibility for the completed Work.

B. Sandblasting and Acid Etching: All areas to receive the Work of this Section shall be given a medium sandblast finish to insure maximum topping adhesion followed by concrete toppings manufacturer's recommended acid etching treatment.

C. Primer: Apply primer as recommended by flooring manufacturer, prior to application of the base coat. Apply in accordance with manufacturer's directions.

D. Fill or grind concrete substrate as may be required to achieve a smooth uniform, level finished appearance on finished Work.

3.3 APPLICATION

A. Do not power trowel the heavy duty concrete topping unless manufacturer provides written certification to ENGINEER that material shall experience no loss in compressive strength or tensile strength.

B. Apply termination and expansion joint strips at the junction of the flooring with other materials and at expansion joints as recommended by the manufacturer.

C. Apply flooring only after finishing operations have been completed and permanent heating system is operating. Moisture content of concrete slabs, building air temperature and relative humidity must be within limits recommended by manufacturer.

D. Mix materials and apply bonding coat in accordance with manufacturer's instructions.

E. Apply glass reinforcement as specified.

F. Apply grout coats to smooth body coat.

G. Apply vinyl ester floor topping coat to 1/4-inch dry cured minimum thickness, or greater if specifically recommended to achieve the physical properties, chemical resistances and dimensional tolerances specified.

H. Power sand to remove trowel marks.

I. Apply top coat sealer material for maximum chemical resistance and cleanability as recommended by the manufacturers.

3.4 ADJUSTMENT AND CLEANING

A. Finishing: Apply a final top coat, to match the texture of the approved samples.

B. Protect installed flooring from damage, by use of heavy Kraft paper or other covering so that flooring is without damage, or unusual or accelerated wear at time of Final Acceptance.

C. Flooring damaged in any manner shall be repaired or replaced at the discretion of ENGINEER, at no additional cost to ENGINEER.

D. The flooring at the time of Final Acceptance shall be clean and without damage, other than for normal wear associated with normal foot traffic, according to the manufacturer's published literature.

END OF SECTION 09880

SECTION 09900
PAINTING

PART 1 GENERAL

1.1 SECTION INCLUDES

A. Surface preparation, priming and coats of paint specified in addition to shop priming and surface treatment specified under other sections of the Work.

1.2 GENERAL

A. The term "paint" as used herein means all coating systems materials, which includes pretreatments, primers, emulsions, enamels, stain, sealers and fillers, and other applied materials whether used as prime, intermediate or finish coats.

B. Paint all exposed surfaces whether or not colors are designated in any schedule, except where the natural finish of the material is specifically noted as a surface not to be painted. The term "exposed" as used herein means all items not covered with cement plaster or concrete. Conduits and other materials with corrosion resistant surfaces which are in chases, above finished ceilings, or other inaccessible areas shall not require field painting. Where items or surfaces are not specifically mentioned, paint these the same as adjacent similar materials or areas.

C. Structural and miscellaneous metals covered with concrete, shall only receive a primer compatible with the covering material.

D. Pipe markers and label shall be provided in accordance with OSHA standards.

1.3 COORDINATION

1. Review installation procedures under other Sections and coordinate the installation of items that must be field painted in this Section.

2. Coordinate the painting of areas that are inaccessible once equipment has been installed.

3. Provide finish coats which are compatible with the prime paints used. Review other Sections of these Specifications in which prime paints are to be provided to ensure compatibility of the total coatings system for the various substrates. CONTRACTOR shall be responsible for the compatibility of all shop primed and field painted items. Furnish information on the characteristics of the

finish materials proposed to use, to ensure that compatible prime coats are used. Provide barrier coats over incompatible primers or remove and reprime as required. Notify the ENGINEER in writing of anticipated problems using the coating systems as specified with substrates primed by others.

1.4 PAINTING NOT INCLUDED

A. The following categories of Work are not included as part of the field-applied finish Work, or are included in other Sections of these Specifications or in other contracts.

1. Shop Priming: Unless otherwise specified, shop priming of structural metal, miscellaneous metal fabrications, other metal items and such fabricated components as shop-fabricated or factory-built heating and ventilating, instrumentation and electrical equipment or accessories shall conform to applicable requirements of Section 09900 but is included under the appropriate Sections of this Specification.

2. Pre-Finished Items: Do not include painting when factory finishing such as baked-on enamel, ceramic glazes, ceramic porcelain, polyvinylidene fluoride, plastic laminate or other similar finish is specified.

3. CONTRACTOR shall be required to touch up factory painted items with paint supplied by the item manufacturer. CONTRACTOR shall field paint damaged prefinished items as directed by ENGINEER.

4. Metal surfaces of anodized aluminum, stainless steel, chromium plate, bronze, copper, and similar finished materials will not require finish painting, unless shown or specified.

5. Operating Parts and Labels:

   a. Moving parts of operating units, mechanical and electrical parts, such as valve and damper operators, linkages, sinkages, sensing devices, motor and fan shafts do not require finish painting unless otherwise specified.
   b. Do not paint over any code-required labels, such as UL and Factory Mutual, or any equipment identification, performance rating, name, or nomenclature plates.
   c. Remove all paint, coating or splatter inadvertently placed on these surfaces.

6. Cast-in-place concrete floor slabs.

7. Cast-in-place concrete walls and ceilings.

8. Sealants.

1.5 QUALITY ASSURANCE

A. Applicator Qualifications:

1. Submit the name and experience record of the painting applicator. Include a list of utility or industrial installations painted, responsible officials, architects, or engineers concerned with the project and the approximate contract price.

2. Painting applicators whose submissions indicate that they have not had the experience required to perform the Work will not be approved.

B. Source Quality Control: Obtain all materials from the same manufacturer unless otherwise approved. Obtain materials only from manufacturers who will:

1. Provide the services of a qualified manufacturer's representative at the project site at the commencement of Work to advise on materials, installation and finishing techniques.

2. Certify long term compatibility of all coatings with all substrates.

C. Reference Standards: Comply with applicable provisions and recommendations of the following, except where otherwise shown or specified:

1. ANSI A13.1, Scheme for the Identification of Piping Systems.

2. OSHA 1910.144, Safety Color Code for Marking Physical Hazards.

3. SSPC Volume 2, Systems and Specifications, Surface Preparation Guide and Paint Application Specifications.

4. State of Rhode Island, Department of Public Health.

5. ANSI/NFS Standard 60, Drinking Water Treatment Chemicals Health Effects.
6. ANSI/NFS Standard 61, Drinking Water System Components - Health Effects.

D. Requirements of Regulatory Agencies: Coatings for surfaces in contact with potable water or water being treated for potable use shall not impart any taste or odor to the water or result in any organic or inorganic content in excess of the maximum contaminant level established by applicable laws or regulations. All such coatings shall be approved by the applicable regulatory agency. Revise painting systems

specified herein to provide manufacturer's regulatory agency approved coating systems at no additional cost to the OWNER.

1.6 SUBMITTALS

A. Samples: Submit for approval the following:

1. Pipe Markers: Each type of marker specified.

B. Shop Drawings: Submit for approval the following:

1. Copies of manufacturer's technical information, including paint label analysis and application instructions for each material proposed for use.

2. Copies of proposed protection procedures in each area of the Work.

3. Copies of manufacturer's Product profile sheets.

4. List each material and cross-reference to the specific paint and finish system and application. Identify by manufacturer's catalog number and general classification.

5. Copies of manufacturer's complete color charts for each coating system.

6. Pipe Markers: Copies of manufacturer's technical brochure, including color chart and list of standard markers.

7. Maintenance Manual: Upon completion of the Work, furnish copies of a detailed maintenance manual including the following information:

   a. Product name and number.
   b. Name, address and telephone number of manufacturer and local distributor.
   c. Detailed procedures for routine maintenance and cleaning.
   d. Detailed procedures for light repairs such as dents, scratches and staining.

C. Test Reports: Submit for approval certified laboratory test reports for required performance tests.

1.7 PRODUCT DELIVERY, STORAGE AND HANDLING

A. Delivery of Materials: Deliver all materials to the job site in original, new and unopened packages and containers bearing manufacturer's name and label, and the following information.

1. Name or title of material.

2. Manufacturer's stock number and date of manufacture.

3. Manufacturer's name.

4. Contents by volume, for major pigment and vehicle constituents.

5. Thinning instructions where recommended.

6. Application instructions.
7. Color name and number.

B. Storage of Materials:

1. Store only acceptable project materials on project site.

2. Store in a suitable location approved by the ENGINEER. Keep area clean and accessible.

3. Restrict storage to paint materials and related equipment.

4. Comply with health and fire regulations including the Occupational Safety and Health Act of 1970.

C. Handling of Materials:

1. Handle materials carefully to prevent inclusion of foreign materials.

2. Do not open containers or mix components until necessary preparatory Work has been completed and application Work will start immediately.

1.8 JOB CONDITIONS

A. Existing Conditions:

1. Before painting is started in any area, it shall be broom cleaned and excessive dust shall be removed.

2. After painting operations begin in a given area, broom cleaning will not be allowed; cleaning shall then be done only with commercial vacuum cleaning equipment.

B. Environmental Requirements:

1. Apply water-base paints only when the temperature of surfaces to be painted and the surrounding air temperatures are between 55° F and 90° F unless otherwise permitted by the paint manufacturer's printed instructions.

2. Apply other paints only when the temperature of surfaces to be painted and the surrounding air temperatures are between 65° F and 95° F, unless otherwise permitted by the paint manufacturer's printed instructions.

3. Do not apply paint in snow, rain, fog, or mist; or when the relative humidity exceeds 85 percent; or to damp or wet surfaces.

4. Painting may be continued during inclement weather only if the areas and surfaces to be painted are enclosed and heated within the temperature limits specified by the paint manufacturer during application and drying periods.

5. Adequate illumination and ventilation shall be provided in all areas where painting operations are in progress.

6. Install piping markers only after all painting and finish Work has been completed.

C. Protection:

1. Cover or otherwise protect finished Work of other trades and surfaces not being painted concurrently or not to be painted.

2. Comply with governing code requirements for air quality and material disposal regulations.

3. Provide fire extinguishers and post caution signs warning against smoking and open flame when working with flammable materials.

4. Submit protection procedures to be employed to the ENGINEER.

PART 2 PRODUCTS

2.1 MATERIAL QUALITY

A. Manufacturer: Provide products manufactured by one of the following:

1. Tnemec Company, Incorporated.

2. Koppers, Incorporated.

B. Provide the best grade of the various types of coatings as regularly manufactured by acceptable paint materials manufacturers. Materials not displaying the manufacturer's identification as a standard, best-grade product will not be acceptable.

C. Provide primers produced by the same manufacturer as the finish coats. Use only thinners recommended by the paint manufacturer, and use only to recommended limits.

D. Provide paints, of durable and washable quality. Use materials which will withstand normal washing as required to remove grease, oil, chemicals, etc., without showing discoloration, loss of gloss, staining, or other damage.

2.2 SUBSTITUTIONS

A. No substitutions shall be considered that decrease the film thickness, the number of coats, the surface preparation or the generic type of coating specified. Approved manufacturers must furnish the same color selection as the manufacturers specified, including accent colors in all coating systems.

2.3 COLORS AND FINISHES

A. Surface treatments, and finishes, are shown under "Painting Systems" below. All substrates scheduled under "Painting Systems" shall be painted whether or not shown on the Drawings, or in Schedules, unless an item is specifically scheduled as not requiring the painting system scheduled below.

B. Color Selection: A maximum of 10 different colors shall be selected for the project.

C. After approval of submittals and prior to beginning Work, will furnish color schedules for surfaces to be painted listed in the painting systems below.

D. Pipe and Sign Color Coding: In general, and unless otherwise specified, all color coding of piping, ducts and equipment shall comply with applicable standards of ANSI A13.1 and OSHA 1910.144.

E. Use representative colors when preparing samples for CONTRACTOR'S review.

F. Color Pigments: Pure, nonfading, applicable types to suit the substrates and service indicated.

1. Lead: Lead content shall not exceed amount permitted by federal, state and local government laws and regulations.

2. Paints specified for application in contact with potable water shall be approved by the Rhode Island Department of Health.

G. Submit proposed application techniques to the ENGINEER. Submit proof of acceptability, of technique proposed, by the paint manufacturer selected.

2.4 PAINTING SYSTEMS

A. Concrete Block Walls; Interior, non-immersion:

1. Surface Preparation: Remove grease, oil and all foreign matter as specified in 3.2.B.

2. Product and Manufacturer: Provide the following:

a. Tnemec:

1) Primer: 54-660 Block Filler - 1 coat, 10.0 dry mils, 75-100 square feet per gallon.

2) Finish: 66 H.B. Epoxoline - 2 coats, 2.0-3.0 dry mils per coat, 240-360 square feet per gallon per coat.

B. Ferrous Metals including all Structural Steel, Miscellaneous Ferrous Metals, and all Ferrous Piping; Interior, non-immersion:

1. Surface Preparation: SSPC-SP 6 Commercial Blast Cleaning as specified in 3.2.C.

2. Product and Manufacturer: Provide the following:

a. Tnemec:

1) Shop Primer: 66-1211 Epoxy - 2 coats, 1.5-2.5 dry mils per coat, 270-460 square feet per gallon per coat.

2) Field Primer or Field Touchup: 66-1211 Epoxy - 1 coat, 1.5-2.5 dry mils per coat, 270-460 square feet per gallon.

3) Finish: 66 H.B. Epoxoline - 2 coats, 2.0-3.0 dry mils per coat, 240-360 square feet per gallon per coat.

C. Ferrous Metals, Interior and Exterior, immersion:

1. Surface Preparation: SSPC-SP10 Near-White Blast

2. Product and Manufacturer: Provide the following:

a. Koppers:

1) Primer: Kop-Coat 340 Gold - 1 coat 4.0 - 6.0 dry mils.

2) Finish: Super Hi-Guard 891 - 2 coats 4.0 - 6.0 dry mils.

D. Ferrous, Non-Ferrous Metals, Fiberglass and Galvanized Metals; Exterior, non-immersion:

1. Surface Preparation:

a. Ferrous Metals: SSPC-SP 6 Commercial Blast Cleaning as specified in 3.2.C.

b. Galvanized and Non-Ferrous Metal: SSPC-SP 1 Solvent Cleaning as specified in 3.2.E. and 3.2.D.

c. Fiberglass: Sand as specified in 3.2.F.

2. Product and Manufacturer: Provide the following:

a. Tnemec:

1) Primer:
a) Ferrous Metals: 66-1211 Epoxy - 2 coats, 1.5-2.5 dry mils per coat, 270-460 square feet per gallon per coat.
b) Non-Ferrous and Galvanized: None.

2) Intermediate: 66 H.B. Epoxoline - 1 coat, 2.0-3.0 dry mils, 240-360 square feet per gallon.

3) Finish: 71 Endura-Shield - 1 coat, 1.5- 2.5 dry mils, 270-460 square feet per gallon.

E. Galvanized Metal and Non-Ferrous Metal; Interior:

1. Surface Preparation: SSPC-SP 1 Solvent Cleaning, as specified in Section 3.2.D., and 3.2.E.

2. Product and Manufacturer: Provide the following:

a. Tnemec:

1) Primer: 66 H.B. Epoxoline - 1 coat, 2.0-3.0 dry mils, 240-360 square feet per gallon.

2) Finish: 66 H.B. Epoxoline - 1 coat, 2.0-3.0 dry mils, 240-360 square feet per gallon.

F. All Aluminum in Contact with Dissimilar Materials:

1. Surface Preparation:

a. Remove all foreign matter.

b. Pretreatment Wash Coat of Polyvinyl Butyral Resin: 1 coat, 0.3-0.5 dry mils.

2. Product and Manufacturer: Provide the following:

a. Tnemec:
1) 66 H.B. Epoxoline - 2 coats, 2.0-3.0 dry mils per coat, 240-360 square feet per gallon per coat.

G. Pipe and Duct Insulation, Cloth; Interior:

1. Surface Preparation: Remove all foreign matter as specified in 3.2.G.

2. Products and Manufacturer: Provide the following:

a. Tnemec:

1) Primer: 51-792 PVA Sealer - 1 coat, 1.0 dry mils, 400 square feet per gallon.

2) Finish: 66 H.B. Epoxoline - 2 coats, 2.0-3.0 dry mils per coat, 240-360 square feet per gallon per coat.

H. PVC Piping, Fiberglass, Fiberglass Insulation Covering; Interior:

1. Surface Preparation: Sand as specified in 3.2.F.

2. Product and Manufacturer: Provide the following:

a. Tnemec:

1) Finish: 66 H.B. Epoxoline - 2 coats, 2.0-3.0 dry mils per coat, 240-360 square feet per gallon per coat.

I. Steel and Galvanized Steel Pipe; Buried Exterior:

1. Surface Preparation: SSPC-SP 10, Near-White Blast, as specified in Section 3.2.C.

2. Product and Manufacturer: Provide the following:

a. Tnemec:

1) Shop Primer: 66-1211 Epoxy - 2 coats, 1.5-2.5 dry mils per coat, 270-460 square feet per gallon per coat.

2) Field Primer or Field Touchup: Surface preparation as specified.

3) Finish: 46H-413 Tneme-Tar - 2 coats, 8.0-10.0 dry mils per coat, 90-120 square feet per gallon per coat.

J. Pre-Cast Concrete; immersion:

1. Surface Preparation: Remove grease, oil and all foreign matter as specified in 3.2.B.

2. Product and Manufacturer: Provide the following:

a. Koppers:

1) Finish: Kop-Coat 600 - 2 coats, 2-4 dry mils per coat.

K. Cast-In-Place Concrete; Interior and Exterior, Non-Immersion:

1. Surface Preparation: Brush-off Blast

2. Products and Manufacture: Provide the following:

a. Koppers:

1) Finish: Bitumastic 300M - 2 coats, 8 - 20 dry mils per coat.

2.5 PIPE MARKERS

A. Manufacturer: Provide products produced by one of the following:

1. W. H. Brady Company.

2. Seton Name Plate Corporation.

B. General:

1. Piping markers shall be formed from laminated plastic. All printing shall be sealed with a formed butyrate plastic film. Markers for piping up to 6-inch diameter shall be preformed to completely wrap around the pipe requiring no adhesive. Markers for pipes over 6-inch diameter shall be preformed to the contour of the pipe and attached with stainless steel spring fasteners.

2. For pipes under 3/4-inch outside diameter: Provide brass tags, 1 1/2-inch diameter, with depressed 1/4-inch high black filled letters above 1/2-inch high black filled numbers.

3. Each marker shall consist of at least 1 legend descriptive of the function of the pipe, and a directional arrow.

4. The size of lettering and marker shall conform to ANSI A13.1.

5. Location of Markers:

a. Adjacent to each valve and "T" connection.

b. At each branch and riser takeoff.

c. At each pipe passage through a wall, floor and ceiling.

d. On all horizontal and vertical pipe runs at 25-foot intervals.

PART 3 EXECUTION

3.1 INSPECTION

A. Examine the areas and conditions under which painting Work is to be performed and notify the ENGINEER in writing of conditions detrimental to the proper and timely completion of the Work. Do not proceed with the Work until unsatisfactory conditions have been corrected in a manner acceptable to the ENGINEER.

B. Do not paint over dirt, rust, scale, grease, moisture, scuffed surfaces, or conditions otherwise detrimental to the formation of a durable paint film.

3.2 SURFACE PREPARATION

A. General:

1. Perform all preparation and cleaning procedures as specified herein and in strict accordance with the paint manufacturer's instructions for each particular substrate and atmospheric condition.

2. Remove all hardware, hardware accessories, machined surfaces, plates, lighting fixtures, and similar items in place and not to be finish painted, or provide surface applied protection prior to surface preparation and painting operations. Remove, if necessary, for the complete painting of the items and adjacent surfaces. Following completion of painting of each space or area, reinstall the removed items by workmen skilled in the trades involved.

3. Clean surfaces to be painted before applying paint or surface treatments. Remove oil and grease with clean cloths and cleaning solvents prior to mechanical cleaning. Program the cleaning and painting so that dust and other contaminants from the cleaning process will not fall in wet, newly painted surfaces.

4. All surfaces which were not shop painted or which were improperly shop painted, and all abraded or rusted shop painted surfaces, which are to be painted, as determined by ENGINEER, shall be prepared as specified below.

B. Masonry Surfaces:

1. Prepare surfaces of concrete block to be painted by removing all efflorescence, chalk, dust, dirt, grease, oils, with soap and water.

2. Determine the alkalinity and moisture content of the surfaces to be painted by performing appropriate tests. If the surfaces are found to be sufficiently alkaline to cause blistering and burning of the finish paint, correct this condition before application of paint. Provide the ENGINEER with suitable testing materials in order to carry out alkalinity and moisture tests.

3. Do not paint over surfaces where the moisture content exceeds 8 percent, unless otherwise permitted in the manufacturer's printed directions.

4. Concrete block surfaces that cannot be adequately cleaned by soap and water shall be acid etched.

C. Ferrous Metals:

1. Clean ferrous surfaces including structural steel and miscellaneous metal to be shop primed, of all oil, grease, dirt, mill scale and other foreign matter by commercial blast cleaning complying with SSPC-SP 6.

2. Clean ferrous surfaces that have not been shop- coated of all oil, grease, dirt, loose mill scale and other foreign substances by commercial blasting, complying with SSPC-SP 6.

3. Clean ferrous surfaces that are exposed to temperatures above 250 F or which will be buried, or that, in the opinion of the ENGINEER, have been improperly shop coated, of all oil, grease, dirt, mill scale and other foreign matter by near white blasting complying with SSPC-SP 10.

4. Treat bare and blasted or pickled clean metal with metal treatment wash coat, prior to priming only if recommended by the paint manufacturer.

5. Touch-up shop-applied prime coats which have damaged or bare areas, with primer recommended by the coating manufacturer after commercial blasting complying with SSPC-SP 6.

D. Non-Ferrous Metal Surfaces: Clean non-ferrous metal surfaces in accordance with the coating system manufacturer's instructions for the type of service, metal substrate, and application required.

E. Galvanized Surfaces:

1. Clean free of oil and surface contaminants with a non-petroleum based solvent, recommended by the coating manufacturer, complying with SSPC-SP 1.

2. Remove shop applied chromic acid treatments on galvanized surfaces to be painted. Galvanized metals which have been given a humid storage stain treatment shall be prepared for painting by sanding or by other techniques as recommended by the paint manufacturer at no additional expense to ENGINEER.

F. PVC Piping and Fiberglass: Lightly sand and clean all surfaces to be painted.

G. Covering on Pipe:: Clean free of oil and surface contaminants as recommended by the coating manufacturer for substrate and application required. Do not cut or damage the insulation in any way.

3.3 MATERIALS PREPARATION

A. General:

1. Mix and prepare painting materials in strict accordance with the manufacturer's directions.

2. Do not mix coating materials produced by different manufacturers, unless otherwise permitted by the manufacturer's instructions.

3. Store materials not in actual use in tightly covered containers. Maintain containers used in storage, mixing, and application of paint in a clean condition, free of foreign materials and residue.

4. Stir all materials before application to produce a mixture of uniform density, and as required during the application of the materials. Do not stir any film which may form on the surface into the material. Remove the film and, if necessary, strain the material before using.

5. Mixing:

   a. Mix only in containers placed in suitably sized non-ferrous or oxide resistant metal pans to protect concrete floor from splashes or spills which could stain exposed concrete or react with subsequent finish floor material.
   b. Mix and apply paint only in containers bearing accurate product name of material being mixed, or applied.

3.4 APPLICATION

A. General:

1. Apply paint by brush, roller, air spray, or airless spray in accordance with the manufacturer's directions and recommendations of Paint Application Specifications No. 1 in SSPC Vol. 2, where applicable. Use brushes best suited for the type of material being applied. Use rollers of carpet, velvet back, or high pile sheep's wool as recommended by the paint manufacturer for material and texture required. Use air spray and airless spray equipment recommended by the paint manufacturer for specific coating system specified. Submit a list of application methods proposed, listing paint systems and location.

2. The paint film thickness required is the same regardless of the application method. Do not apply succeeding coats until the previous coat has completely dried.

3. Apply additional coats when undercoats, stains, or other conditions show through the final coat of paint, until the paint film is of uniform finish, color and appearance. This is of particular importance regarding intense primary accent colors. Insure that all surfaces, including edges, corners, crevices, welds, and exposed fasteners receive a film thickness equivalent to that of flat surfaces.

4. Surfaces not exposed to view do not require color coding but require the same coating system specified for exposed surfaces.

   a. "Exposed to view surfaces" is defined as those areas visible when permanent or built-in fixtures convector covers, covers, covers for finned tube radiation, grilles, etc. are in place in areas scheduled to be painted.

5. Paint interior surfaces of ducts, where visible through registers or grilles, with a flat, non-specular black paint as specified, before final installation of equipment.

6. Paint aluminum parts in contact with dissimilar materials as specified with appropriate primer.

7. Omit field primer on metal surfaces which have been shop primed touch-up paint shop prime coats only when approved by the ENGINEER.

8. Paint the backs of access panels, and removable or hinged covers to match the exposed surfaces.

B. Heating, Ventilating, Air Conditioning and Electrical Work:

1. Heating, ventilating, and air conditioning items to be painted include, but are not limited to, the following:

a. Piping, pipe hangers, and supports.

b. Heat exchangers.

c. Tanks.

d. Ductwork and insulation.

e. Motors, mechanical equipment, and supports.

f. Accessory items.

2. Electrical items to be painted include, but are not limited to, the following:

a. Conduit and fittings.

b. Switchgear, panels, junction boxes, motor control centers, motors and accessories.

C. Minimum Coating Thickness:

1. Apply each material at not less than the manufacturer's recommended spreading rate, and provide total dry film thickness as specified.

2. Apply extra coat if required to obtain specified total dry film thickness.

D. Scheduling Painting:

1. Apply the first-coat material to surfaces that have been cleaned, pretreated or otherwise prepared for painting as soon as practicable after preparation and before subsequent surface deterioration.

2. Allow sufficient time between successive coatings to permit proper drying. Do not recoat until paint has dried to where it feels firm, does not deform or

feel sticky under moderate thumb pressure, and the application of another coat of paint does not cause lifting or loss of adhesion of the undercoat.

E. Prime Coats: Recoat primed and sealed walls and ceilings where there is evidence of suction spots or unsealed areas in first coat, to assure a finish coat with no burn-through or other defects caused by insufficient sealing.

F. Pigmented (Opaque) Finishes: Completely cover to provide an opaque, smooth surface of uniform finish, color, appearance, and coverage.

G. Transparent (Clear) Finishes:

1. On exposed to view portions, use multiple coats to produce glass- smooth surface film continuity of even matt luster. Provide a finish free of laps, cloudiness, color irregularity, runs, brush marks, orange peel, nail holes, or other surface imperfections.

2. Provide satin finish for final coats, unless otherwise indicated.

H. Brush Application:

1. Brush-out and work all brush coats onto the surfaces in an even film. Cloudiness, spotting, holidays, laps, brush marks, runs, sags, ropiness, or other surface imperfections will not be acceptable. Neatly draw all glass and color break lines.

2. Brush apply all primer or first coats, unless otherwise permitted to use mechanical applicators.

I. Mechanical Applicators:

1. Use mechanical methods for paint application when permitted by governing ordinances, paint manufacturer, and approved by the ENGINEER. If permitted, limit to only those surfaces impracticable for brush applications.

2. Limit roller applications, if approved by the CONTRACTOR, to interior wall finishes for second and third coats. Apply each roller coat to provide the equivalent hiding as brush-applied coats.

3. Confine spray application to metal framework, siding, decking, wire mesh and similar surfaces where hand brush work would be inferior and to other surfaces specifically recommended by paint manufacturer.

4. Wherever spray application is used, apply each coat to provide the equivalent hiding of brush-applied coats. Do not double back with spray equipment for the purpose of building up film thickness of 2 coats in one pass.

J. Completed Work: Match approved samples for color, texture and coverage. Remove, refinish, or repaint Work not in compliance with specified requirements as required by CONTRACTOR.

K. Piping Markers: Apply piping markers in accordance with the manufacturer's written instructions in locations herein specified.

3.5 PROTECTION

A. Protect work of other trades, whether to be painted or not, from the Work of this Section. Leave all such work undamaged. Correct all damages by cleaning, repairing or replacing, and repainting, as acceptable to the ENGINEER.

B. Provide "Wet Paint" signs as required to protect newly painted finishes. Remove all temporary protective wrappings provided for protection of this Contract and other contracts after completion of painting operations.

3.6 CLEAN-UP

A. During the progress of the Work, remove from the site all discarded paint materials, rubbish, cans and rags at the end of each work day.

B. Upon completion of painting Work, clean all paint-spattered surfaces. Remove spattered paint by proper methods of washing and scraping, using care not to scratch or otherwise damage finished surfaces.

C. At the completion of work of other trades, touch-up and restore all damaged or defaced painted surfaces as determined by the ENGINEER.

END OF SECTION 09900

SECTION 10200
LOUVERS AND VENTS

PART 1 GENERAL

1.1 SECTION INCLUDES

A. Furnish and install all louvers and vent Work.

1. The types of louvers and vent Work required includes, but is not necessarily limited to, the following:

   a. 6-inch dual combination drainable blade-motor operable louvers.

   b. Sill extensions, bird screens, and other miscellaneous trim, fasteners, insulated blank-off panels and other accessories.

   c. Full strength custom color polyvinylidene fluoride coating system.

1.2 COORDINATION

1. Review installation procedures under other Sections and coordinate the installation of items that must be installed with the louvers and vent Work.

2. Coordinate louver selections with Section 15970, Automatic Temperature Controls.

1.3 RELATED SECTIONS

1. Section 15970, Automatic Temperature Controls.

2. Division 16, electrical.

1.4 QUALITY ASSURANCE

A. Design Criteria: Comply with Sheet Metal and Air Conditioning Contractor's National Association, Architectural Sheet Metal Manual, recommendations for fabrication, construction details, and installation procedures, except as otherwise shown or specified.

B. Source Quality Control: Verify size, location and placement of louver units prior to fabrication, wherever possible. Coordinate field measurements and Shop Drawings with fabrication and shop assembly to minimize field adjustments, splicing,

mechanical joints and field assembly of units. Preassemble units in as large sections as practicable.

C. Reference Standards: Comply with applicable provisions and recommendations of the following except as otherwise shown or specified.

1. ASTM B 117, Salt Spray (Fog) Testing.

2. ASTM D 523, Specular Gloss.

3. ASTM D 659, Evaluating Degree of Resistance to Chalking of Exterior Paints.

4. ASTM 1308, Effect of Household Chemicals on Clear and Pigmented Organic Finishes.

5. ASTM D 1737, Elongation of Attached Organic Coatings with Cylindrical Mandrel Apparatus.

6. ASTM D 2244, Color Differences of Opaque Materials.

7. ASTM D 2247, Coated Metal Specimens at 100 Percent Relative Humidity.

1.5 SUBMITTALS

A. Samples: Submit for approval the following:

1. 12-inch by 12-inch corner section of each louver specified with specified finish.

2. CONTRACTOR's review will be for color, general appearance and workmanship only. Compliance with all other requirements is the exclusive responsibility of CONTRACTOR.

B. Shop Drawings: Submit for approval the following:

1. Shop Drawings for the fabrication and erection of louver and vent assemblies. Include details of sections and connections. Show anchorage and accessory items.

2. Copies of manufacturer's technical data including free area, air infiltration, anchor details and installation instructions including finishing products.

3. Manufacturer's written guarantees as specified.

1.6 GUARANTEE

A. Provide written guarantee agreeing to replace louver and vent Work which fail in materials or workmanship within 3 years of the date of Final acceptance. Failure of materials or workmanship shall include, but is not limited to excessive leakage or air infiltration, excessive deflections, deterioration of finish or metal in excess of normal weathering, and defects in accessories, weatherstripping, and other components of the Work.

PART 2 PRODUCTS

2.1 MATERIALS

A. Aluminum Sheet: ASTM B 209, 5005 with temper as required for forming, or as otherwise recommended by the metal producer to provide the required finish.

B. Aluminum Extrusions: ASTM B 221, Alloy 6063-T52.

C. Fastenings: Use same materials as items fabricated. Provide types, gages and lengths to suit unit installation conditions. Use Phillips flat-head machine screws for exposed fasteners, unless otherwise specified. Use continuous aluminum closure angles on the inside perimeter frame of all louver and vent Work, finished to match louvers and vents.

D. Anchors and Inserts: Use stainless expansion bolt devices for drilled-in place anchors.

E. Bituminous Paint: SSPC-Paint 12 (cold-applied asphalt mastic).

F. Insulated Blank-Off Panels: Provide 2-inch thick, 0.032-inch aluminum sheet with Copper Metallic polyvinylidene fluoride finish. Provide stainless steel fasteners, 12 inches on centers with closed cell polyvinylchloride compression gaskets around entire perimeter of each blank-off panel.

2.2 DUAL COMBINATION LOUVERS

A. Furnish 6-inch electrically operable dual drainable blade dual combination louvers at all locations where operable louvers are shown. Furnish manufacturer's recommended bearings and operating mechanisms to suit the louver sizes and method of operation.

B. Air Leakage: Do not exceed 3.5 cubic foot per minute per square foot at a static pressure of 0.5-inch of water gage.

C. Provide all drainable operable blades 0.125-inch thick pivoted with two reinforcing bosses and 1/2-inch diameter zamac alloy pinions operating in self-lubricating nylon bearings. Drainable fixed blades shall be 0.081-inches thick with front lip gutter and recessed second gutter, both of which direct water to jamb and mullion drains. Mullions shall be of the sliding interlock type with integral drainage profile. All louver blades shall have vinyl gaskets on all edges and shall be operated by drive arms at each jamb and assembled with aluminum shoulder rivets. Head, sill and jambs shall be one piece structural members with integral calking strips and retaining beads.

D. Provide closed cell polyvinylchloride compression gaskets between bottom of mullion and jamb and top of sill to insure leak tight connections.

E. Provide head, sill, and jamb of one piece structural member with integral calking strips and retaining beads.

F. Provide louver supports designed to carry 30 pounds per square foot wind load.

G. Product and Manufacturer: Provide one of the following:

1. No. 6967 model D0C6 by Air Stream Products Division, Penn Ventilator Co., Inc., by Construction Specialties, Incorporated.

2. Or equal.

2.3 FINISHES

A. Exposed Aluminum Polyvinylidene Fluoride Based Coating: Apply full strength polyvinylidene fluoride based coatings at the factory by coil coating for sheet material and spray coating for extruded material. Provide the following three coat system complying with the following:

1. Alkali clean and hot water rinse all surfaces to receive polyvinylidene fluoride based finish.

2. Prepare a chemical conversion coating on the surface, using phosphates or chromates followed by a cold water rinse. Seal with a chromic acid rinse and dry, except where manufacturer recommends another method to achieve greater coating reliability.

3. Apply a base prime coat of epoxy paint to the prepared surface in its coil form, by reverse roller coating. Fully cure in a gas-fired oven to a dry film thickness of 0.2 - 0.4 mils.

4. Apply color coat over the primer by roller coating for coil material and airless or Ransburg Elastrostatic Hand Spray for extrusions and fuse at a peak metal temperature of 440 F for a dry film thickness of 0.7 mils for coil coating and 1.2 mils for spray coating.

5. Apply clear fluoropolymer topcoat to provide a dry film thickness of 0.4 - 0.8 mils. The entire three coat system shall have a dry film thickness of 1.6 mils minimum.

6. Provide the following physical properties, as proven by appropriate and recognized laboratory test methods acceptable to CONTRACTOR:

   a. Weathering, ASTM D 659: Chalking, not more than No. 8, after exposure for 5000 hours in Sunshine Arc Weatherometer XWR using 60/60 cycle.

   b. Color Change, ASTM D 2244: No grater than 5 N.B.S. units after removal of external deposits and after exposure for 5000 hours in Sunshine Arc Weatherometer XWR using 60/60 cycle.

   c. Humidity Resistance, ASTM D 2247; few scattered blisters no larger than ASTM No. 4, after 1000 hours.

   d. Salt Spray, ASTM B 117: Few scattered blisters no larger than ASTM No. 4, and no more than 1/16 inch creep from areas scribed to bare metal after 500 hours.

   e. Dry Adhesion: No pick-off when tape tested over 1/16 inch cross hatch.

   f. Wet Adhesion: No pick-off when tape tested over 1/16 inch cross hatch; extruded material only.

   g. Boil Water Adhesion: No pick-off when tape tested over cross hatch area after 1 hour immersion in distilled boiling water.

   h. Water Immersion: No pick-off when tape tested over cross hatch area after immersion in aerated distilled water 80 $\pm$ 10F after 500 hours.

   i. Abrasion Resistance, ASTM D 968: Coefficient of abrasion of 67 minimum.

   j. Gloss, ASTM D 523: 30 $\pm$ 5 reflectivity at 60F.

k. Pencil Hardness: HB-H minimum

l. Dry Film Thickness: Primer, 0.2 - 0.4 mils, polyvinylidene fluoride color coating, 0.7 - 1.5 mils; clear top coat, 0.4 - 0.8 mils.

m. Solvent Resistance: 100 Double MEK rubs minimum.

n. Flexibility, ASTM D 1737: No cracking prior to metal fracture.

o. Acid Resistance, ASTM D 1308: 16 hour spot test with 5% hydrochloric acid - no effect.

p. Alkali Resistance, ASTM D 1308: 16 hour spot test with 5% sodium hydroxide - no effect.

q. Provide the following colors:

1. Operable Louvers, Sill Extension and Continuous Closure Angles: All Components: Light bronze DF-02
2. Exposed Fasteners: Color and finish to match substrate

2.5 LOUVER SCREENS

A. Provide removable screens on the interior side of all louvers.

B. Fabricate screen frames of the same metal and finish as the louver units to which secured. Provide frames consisting of extra heavy duty extruded 0.090-inch aluminum for permanently securing screen mesh. Frames shall be rewirable.

C. Use bird screen of 1/2-inch mesh, 0.063-inch diameter stainless steel intercrimp wire.

D. Secure screens to louver frames with machine screws, spaced at each corner and at 12 inches on centers.

E. Provide minimum No. 8 stainless steel metal screws unless larger screws are required by screen size.

2.6 SILL EXTENSION

A. Gage and Finish: Same as louver.

PART 3 EXECUTION

3.1 INSPECTION

A. CONTRACTOR and his installer must examine the areas and conditions under which louvers and vent Work and associated items are to be installed and notify OWNER in writing of conditions detrimental to the proper and timely completion of the Work. Do not proceed with the Work until unsatisfactory conditions have been corrected in a manner acceptable to OWNER.

3.2 PREPARATION

a. Coordinate setting drawings, diagrams, templates, instructions and directions for the installation of anchorages which are to be embedded in concrete or masonry construction. Coordinate the delivery of such items to the project site.

3.3 INSTALLATION

A. Locate and place louver units plumb, level and in proper alignment with adjacent work.

B. Use stainless steel expansion bolt anchors with stainless steel washers and neoprene gaskets. Use spring clips at all anchors to stop deflection of the louver frame. Provide anchors spaced 2 feet-0 inches on centers. Provide continuous aluminum angles for anchoring all operable louvers.

C. Form tight joints with exposed connections accurately fitted together. Provide reveals and openings for sealants and joint fillers, as shown.

D. Repair finishes damaged by cutting, welding, soldering and grinding operations required for fitting and jointing. Restore finishes and prime coats of paint so that there is no evidence of corrective Work. Return items which cannot be refinished in the field to the shop, make the required alterations, and refinish the entire unit, or provide new units, as determined by CONTRACTOR.

E. Protection-ferrous metal surfaces from corrosion or galvanic action by application of a heavy coating of bituminous paint on surfaces which will be in contact with concrete, masonry or dissimilar metals.

F. Provide aluminum sheet frames of same color and finish as louvers around all louver frames projecting beyond the masonry walls on the interior, and install as the Work progresses to make the installations weathertight.

3.4 FIELD QUALITY CONTROL

A. Determine conformity of louver and vent finish to the specifications as follows:

1. The manufacturer of the louver and vent shall set aside and label samples of the metal from each production lot for the job. Protect samples from weather.

2. Make sample louver and vent available at all times, for comparison with installed louver and vent Work as requested by CONTRACTOR, for the full time of the warranty.

3. Make color comparison measurements with a Hunter Tristimulus Color Difference Meter employing methods of computation in use at the National Bureau of Standards conforming to ASTM D 2224.

3.5 ADJUSTMENT AND CLEANING

A. Set adjustable louver blades for uniform alignment in open and closed positions.

B. Adjust louvers so moving parts operate smoothly.

C. Check the motor operator installation for the operable louver.

END OF SECTION 110200

SECTION 10400
IDENTIFICATION DEVICES

PART 1 - GENERAL

1.1 SECTION INCLUDED

A. Furnish and install all identification devices Work. The type of identification devices includes, but is not necessarily limited to, interior room identification signs, self-luminous exit signs, miscellaneous fasteners and supports, safety signs, and right-to-know labels and tags.

1.2 RELATED SECTIONS

1. Section 09900, Painting.

1.3 QUALITY ASSURANCE

A. Field Measurements: Take field measurements prior to preparation of Shop Drawings and fabrication, where possible, to ensure proper fitting of the Work.

B. Inserts and Anchorages:

1. Furnish inserts and mechanical anchoring devices for the installation of identification devices and related work.

2. Provide setting drawings, templates, instructions and directions for installation of anchorage devices. Coordinate delivery with other work to avoid delay.

C. Shop Assembly: Preassemble items in the shop to the greatest extent possible. Disassemble units only to the extent necessary for shipping and handling limitations. Clearly mark units for reassembly and coordinated installation.

1.4 SUBMITTALS

A. Samples: Submit for approval samples of each color and finish of exposed materials and accessories required for identification devices. ENGINEER's review of samples will be for color and texture only. Compliance with all other requirements is the exclusive responsibility of CONTRACTOR.

B. Shop Drawings: Submit for approval the following:

1. Shop Drawings for fabrication and erection of identification devices. Include plans, elevations, and full-size graphic layout. Show anchorages and accessory items. Furnish location template drawings for items supported or anchored to permanent construction.

2. Copies of manufacturer's technical data and installation instructions for each type of device required.

3. Complete selection of specified manufacturer's standard and custom colors.

4. Plans showing location of all required exit signs with information indicating mounting position, location and substrate. Coordinate location of exit signs for non-interference with other Work as required by governing building code.

PART 2 - PRODUCTS

2.1 ROOM IDENTIFICATION SIGNS, FIRE EXTINGUISHER LOCATION SIGNS AND SAFETY SIGNS

A. Material: Subsurfaced silk screened on transparent acrylic sheet, .015-inches thick, 1-5/8-inches by 13-inches, laminated to .125-inch thick colored background with white helvetica medium lettering, 3/4-inch size, all capitals, square edges and corners, 2-inch by 13-3/8-inch aluminum frame.

1. Room Identification Signs: Schedule of room names will be supplied by ENGINEER after award of Contract. Every interior door will receive two plaques and room names may be used to estimate quantities of letters.

2. Product and Manufacturer: Provide one of the following:

   a. 320 Series, SOG construction as manufactured by ASI Sign Systems, Incorporated.

   b. ES100 as manufactured by Vomar Products, Incorporated.

3. Safety Sign: Provide 25 signs to be used throughout the project, change background color to yellow with black lettering. Message, and location to be determined by ENGINEER. Signs shall be fiberglass or metal backed butylate, 10 inches by 14 inches.

4. Fire Extinguisher Identification Sign: Provide one for each surface mounted fire extinguisher. Background color red with white lettering. Sign shall incorporate a directional arrow as located by ENGINEER.

5. Product and Manufacturer: Provide one of the following:

a. Butyrate signs as manufactured by Seton Name Plate Corporation.

b. Fiberglass signs as manufactured by W.H. Brady Company.

2.2 SELF-LUMINOUS EXIT SIGNS

A. Provide self-luminous exit signs. Sign housing shall consist of an A42 color anodized extruded aluminum frame. The size, graphics and background color of the sign legend shall conform to all relevant code requirements. The legend shall be protected by a temper-resistant acrylic shield.

B. Lumination for exit signs shall be provided by sealed phosphor-coated tubes containing tritium located directly behind each portion of each letter. The tritium light sources shall be housed in a single impact resistant module.

C. Signs shall be listed by Underwriters Laboratories as being capable of providing a 10-15 year service life.

D. Mount exit signs in locations shown. Surface mount signs above all exit doors unless otherwise shown. Provide manufacturer's standard universal mounting bracket.

E. Product and Manufacturer: Provide one of the following:

1. Everglo Signs by Self Powered Lighting Incorporated.

2. Isolite Model 2040-01 Signs by Safety Light Corporation.

2.3 RIGHT-TO-KNOW LABELS AND TAGS

A. Provide right-to-know target organ labels for each chemical storage area. Provide right-to-know tags along chemical pipelines and fill pipes as specified.

B. Right-to-know labels for storage areas shall be provided with stick-on numbers/symbols and legends. Labels shall provide information such as chemical name and/or CAS number, fire and health hazard, reactivity, personal protection and target organ legends.

C. Provide right-to-know tags for attaching to pipelines and fill lines. Locate tags at 25 feet maximum center to center distance within range on each side of through-wall pipe penetrations and as directed by ENGINEER. Tags shall be constructed of laminated plastic and furnished with nylon tie fasteners.

D. Quantity:

1. Right-to-know Labels: 25 labels minimum.

2. Right-to-know Tags: As required based on criteria specified and installed lengths of pipelines and fill lines.

E. Product and Manufacturer: Provide one of the following:

1. Right-to-know Labels and Style RTK-T2 Tags by Seton Name Plate Company.

PART 3 - EXECUTION

3.1 INSPECTION

A. CONTRACTOR and his installer must examine the substrates and conditions under which the devices are to be installed and notify ENGINEER in writing of conditions detrimental to the proper and timely completion of the Work. Do not proceed with the Work until unsatisfactory conditions have been corrected in a manner acceptable to ENGINEER.

3.2 INSTALLATION

A. Install identification devices and components at the locations shown or, if not shown, as directed by ENGINEER, securely mounted with concealed theft- resistant fasteners. Attach signs to substrates in accordance with the manufacturer's instructions, unless otherwise shown.

B. Use stainless steel fasteners.

C. Install level, plumb, and at the proper height. Cooperate with other trades for installation of sign units to finish surfaces. Repair or replace damaged units as directed by ENGINEER.

END OF SECTION 10400

SECTION 11210

SOIL VAPOR EXTRACTION SYSTEM GROUNDWATER PUMPS

PART 1 GENERAL

1.1 SECTION INCLUDES

A. Water discharge pumps.

B. Pump motor.

1.2 RELATED SECTIONS

A. Section 02671 A & B - Soil Vapor Extraction and Groundwater Extraction Well Modification Extraction Wells.

B. Section 15060 - Soil Vapor Extraction Piping and Appurtenances.

C. Section 15260 - Piping Insulation.

D. Section 15980 - Functional Description and Instrumentation

E. Section 16111 - Conduit.

1.3 REFERENCES

A. NEMA MG-1 - Motors and Generators.

B. NEMA 250 - Enclosures for Electrical Equipment (1000 Volt Maximum).

C. UL 778 - Motor Operated Water Pumps.

1.4 SYSTEM DESCRIPTION

A. Provide two (2) electric motor driven progressive cavity, wobble stator, horizontal pumps with electric controllers for discharge of groundwater from water extraction tank to equalization tank # 2. Pumps shall be designated as "Duty" and "Back-Up".

1.5 SUBMITTALS

A. Submit under provisions of Section 1E4.

B. Shop Drawings: Indicate layout, general assembly, components, dimensions, weights, clearances, and methods of assembly.

C. Product Data: Provide manufacturers literature including general assembly, and operation and maintenance.

D. Manufacturer's Installation Instruction: Indicate support details, connection requirements, and include start-up instructions for pump system.

E. Manufacturer's Certificate: Certify that pumps meet or exceed specified requirements at specified operating conditions.

F. Field Reports: Indicate summary of hydrostatic test and field acceptance tests performed.

G. Operation Data: Include manufacturers instructions, start-up data, trouble-shooting check lists, wiring diagrams and service connections for pumps, drivers, and controllers.

H. Maintenance Data: Include manufacturers literature, cleaning procedures, replacement parts lists, and repair data for pumps, drivers and controllers.

1.6 QUALITY ASSURANCE

A. Equipment and Components: Bear UL label or marking.

B. Maintain 1 copy of each document on site.

1.7 QUALIFICATIONS

A. Installer: Company specializing in performing the work of this Section with minimum 3 years documented experience.

1.8 DELIVERY, STORAGE, AND HANDLING

A. Delivery, store, protect and handle products to site under provisions of SectionS 1G9 and 1G17. 01600..10

B. Accept pumps and components on site in factory packing. Inspect for damage. Comply with manufacturers rigging and installation instructions.

C. Protect pumps and components from physical damage including effects of weather, water, and construction debris.

D. Provide temporary inlet and outlet caps, and maintain in place until installation.

1.9 MAINTENANCE SERVICE

A. Furnish service and maintenance of pump, driver, and controller for 1 year from date of Substantial Completion.

1.10 SPARE PARTS

A. Provide 1 set of seals, stator and rotor for each pump type and model supplied.

PART 2 PRODUCTS

2.1 MANUFACTURERS

A. Robbins & Myers, Inc., Springfield, Ohio, Product: Progressive County Pumps

2.2 PUMPS

A. Type: Progressive Cavity

B. Casting: Cast iron with NPT female suction and discharge.

C. Stator: Viton.

D. Rotor: Solid 416 S.S, chrome plated.

E. Mechanical Seal: Abrasion resistant type - carbon rotating against a stationary ceramic seat viton fitted, 275 degrees F (135 degrees C) maximum continuous operating temperature.

F. Baseplate: ASTM A-36 Steel; 10 inch C Channel

G. Performance:

1. Pump Performance Curve attached - Model 356 operating at 1200 RPM.

2. Calculated Pump Operating Flow Rates (Excludes Affects of VE7 Groundwater Extraction Well):

	Q(gpm)	ΔP(psi)	DP(psig)
Duty (1 pump)	15-1/2	19	5
Duty & Backup (2 pumps)	31	24	10

Fluid based on H_2O @ 60°F
Density = 62.37 lb/ft^3
Kinematic Viscosity = 1.217×10^{-5} ft^2/sec
ΔP = Differential Pressure
DP = Discharge Pressure

H. Model: 35601 Moyno SP

2.3 ELECTRIC MOTOR DRIVE

A. Motor: 1 hp (0.75 kW), 440 volt, 3 phase, 60 Hz, 1.25 service factor, 1200 RPM, Explosion Proof for Class I, Division 2 Hazardous Environments. Refer to Section 16482.

B. Drive: Pumps shall be long coupled and mounted to steel channel base plate complete with coupling guard by manufacturer or a qualified representative/distributor.

PART 3 EXECUTION

3.1 INSTALLATION

A. Install in accordance with manufacturer's instructions.

B. Provide access space around pumps for service. Provide no less than minimum as recommended by manufacturer.

C. Decrease from line size, if required, with long radius, eccentric reducing elbows. Support piping adjacent to pump such that no weight is carried on pump casings. For base mounted pumps, provide

supports under elbows on pump suction and discharge. Refer to Section 15060.

D. Provide piping. Refer to Section 15060.

E. Provide bypass relief valve set at 25 psig (adjustable setting). Refer to Section 15060.

F. Provide for connection to electrical service.

G. Perform pre-operational services per manufacturer's recommendations prior to start-up.

H. Check, align, and certify base mounted pumps by pump manufacturer or qualified representative/distributor.

3.2 FIELD QUALITY CONTROL

A. Perform hydrostatic flow test on entire system.

B. Testing to be witnessed by Engineer.

END OF SECTION

SECTION 11212
AIR OPERATED DIAPHRAGM PUMPS

PART 1 GENERAL

1.1 SECTION INCLUDES

A. Furnish and install the positive displacement, air operated double diaphragm type pumps complete with piping and valves for the sludge recycle, sludge transfer, and sludge feed pumps.

1.2 RELATED SECTIONS

1. Section 15080, Piping Smaller Than 4 Inches in Diameter.

1.3 QUALITY ASSURANCE

A. Reference Standards: Comply with all applicable provisions and recommendations of the following:

1. Standards of the Hydraulic Institute.

1.4 SUBMITTALS

A. Shop Drawings: Submit for approval the following:

1. Manufacturer's literature, including illustrations, specifications, materials, performance date, flow rate and total dynamic head.

2. Fabrication, assembly, installation and wiring drawings.
3. Operation and Maintenance manual.

PART 2 PRODUCTS

2.1 SERVICE CONDITIONS

A. The pumps shall be specifically designed and constructed for the service intended and shall comply with the following minimum conditions:

Design Condition:	Description:
Service:	Sludge Recycle
No. Required:	1
pH Range:	8 - 10
Design Flow:	15 gallons/minute
TDH:	25 feet
Inlet Size:	2-inch
Discharge Size:	2-inch
Temperature:	Ambient
Service:	Sludge Transfer
No. Required:	1
pH Range:	8 - 11
Design Flow:	25 gallons/minute
TDH:	25 feet
Inlet Size:	2-inch
Discharge Size:	2-inch
Temperature:	Ambient
Service:	Sludge Feed
No. Required:	1
pH Range:	8 - 10
Design Flow:	25 gallons/minute

Design Condition:	Description:
TDH:	100 psig
Inlet Size:	2-inch
Discharge Size:	2-inch
Temperature:	Ambient

2.2 DETAILS OF CONSTRUCTION

A. Materials of Construction: All pumps shall be designed for continuous operation, 24 hours per day, 7 days per week without damage. The pumps shall be held together with clamp bands for added security and easy maintenance.

1. The pump body and all non-wetted parts shall be constructed of close grain cast-iron.

2. Pump ball check valve shall be constructed of Teflon.

3. Valve seats shall be constructed of Teflon.

4. Pump diaphragms: Double diaphragms constructed of Teflon.

5. External Hardware: All bolts, nuts and cap screws shall have hexagon heads and be constructed of stainless steel, type 316.

6. Air Valve: The air control valve shall be constructed of an aluminum alloy which has been machined and hardened. The air control valve shall have only one moving part. The valve shall be able to be serviced without requiring disassembly of the pump.

7. Priming: Self priming dry to 20 feet.

8. Noise: Pumps shall include a muffler to reduce air exhaust noise to less than 85 dbs.

C. Painting: All pump non-wetted parts shall receive the manufacturer's standard finish paint system prior to shipment.

D. Warranty: All pumps shall be hydrostatically and functionally tested prior to shipment from the factory. All pump materials shall be guaranteed for a period of one-year from the date of start-up by the manufacturer.

E. Products and Manufacturer: Provide the sludge transfer and recycle pumps from one of the following:

1. Wilden Pump and Engineering Co.

2. Warren Rupp Sand Piper.

3. Or equal.

END OF SECTION 11212

SECTION 11214
POSITIVE DISPLACEMENT METERING PUMPS

PART 1 GENERAL

1.1 SECTION INCLUDES

A. Furnish and install four (4) positive displacement, diaphragm type complete with piping and valves as shown and specified.

1.2 RELATED SECTIONS

1. Section 15080, Piping Smaller Than 4 Inches in Diameter.

2. Division 16, Electrical.

1.3 QUALITY ASSURANCE

A. Reference Standards: Comply with all applicable provisions and recommendations of the following:

1. Standards of the Hydraulic Institute.

1.4 SUBMITTALS

A. Shop Drawings: Submit for approval the following:

1. Manufacturer's literature, including illustrations, specifications, materials, performance date, flow rate and total dynamic head.

2. Fabrication, assembly, installation and wiring drawings.

3. Operation and Maintenance manual.

PART 2 PRODUCTS

2.1 SERVICE CONDITIONS

A. The pumps shall be specifically designed and constructed for the service intended and shall comply with the following minimum conditions:

Design Conditions	Caustic Soda Feed	Hydrogen Peroxide Feed	Sulfuric Acid Feed
1. Service:	25% Liquid Sodium Hydroxide	35% By wt. Hydrogen Peroxide	93% By wt. Sulfuric Acid
2. Number Required:	2	1	1
3. Flow	1.5 GPH	1 GPH	1 GPH
4. TDH (ft)	35	35	15
5. Temperature:	Ambient	Ambient	Ambient
6. Suction:Lift (ft.)	Flooded	Flooded	Flooded
7. Materials of Construction:			
Wetted Parts	PVC	PVC	Kynar
Diaphragm	Teflon	Teflon	Teflon
Ballchecks	316SS/Teflon	Teflon	Alloy 20/Teflon
8. Stroke Adjustment:	Manual	Manual	Manual
9. Turn down ratio	100:1	100:1	100:1

B. Drives

1. Pump motor shall be TEFC rated for continuous duty.

2. Power supply shall be 115VAC, 60 Hz.

3. Motor shall be designed for normal starting torque. Service factor shall be 1.0.

2.2 Painting: All pump non-wetted parts shall receive the manufacturer's standard finish paint system prior to shipment.

2.3 Warranty: All pumps shall be hydrostatically and functionally tested prior to shipment from the factory. All pump materials shall be guaranteed for a period of one-year from the date of start-up by the manufacturer.

2.4 Products and Manufacturer: Provide the pumps from one of the following:

1. LMI-Liquid Metronics Division - Milton Roy.

2. The Dariron Meeting Pump Group.

3. Or equal.

PART 3 EXECUTION

3.1 GENERAL

A. Install all metering pumps in accordance with the manufacturers recommendations.

END OF SECTION 11214

SECTION 11222
TOP ENTERING MECHANICAL MIXING EQUIPMENT

PART 1 GENERAL

1.1 SECTION INCLUDES

A. Furnish and install top-mounted, parallel shaft mixers, complete with motors, gears, and accessories.

1.2 GENERAL

A. All equipment shall be furnished by a single mixer manufacturer, who shall assume responsibility for proper alignment and operation of the complete mixing unit.

B. Drawings:

1. Drawings are for purposes of guidance and to show functional features required. They do not show all components required to accomplish the desired results or all components required to interface equipment. All parts, equipment and devices necessary to meet the functional requirements shall be provided.

2. Drawings are not intended to show exact dimensions peculiar to any specific mixing equipment. The dimensions of the mixer bases, may have to be changed in order to accommodate the equipment furnished.

3. All mixers shall be designed and built for the specified service, without overheating, without excessive vibration or strain, and requiring only that degree of maintenance generally accepted as peculiar to the specific type of mixer required.

1.3 RELATED SECTIONS

A. Division 3, Concrete.
B. Section 09900, Painting.
C. Division 16, Electrical.

1.4 QUALITY ASSURANCE

A. Reference Standards: Comply with applicable provisions and recommendations of the following, except as otherwise shown or specified.
   1. American Gear Manufacturers Association.
   2. Anti-Friction Bearing Manufacturers Association.
   3. Occupational Safety and Health Act.
   4. National Electric Code.
   5. National Electrical Manufacturers Association.
   6. Institute of Electrical and Electronic Engineers.
   7. American National Standards Institute.
   8. Joint Industrial Council.

1.4 SUBMITTALS

A. Shop Drawings:
   1. Manufacturer's literature, illustrations, specifications and engineering data for all equipment including:
      a. Dimensions.
      b. Materials.
      c. Size.
      d. Weight.
      e. Torque.
      f. Bending moment.
      g. Critical speed.
      h. Diameter of shaft.
      i. Shaft rpm.

j. Impeller diameter.

k. Pitch of impeller.

l. Distance from bottom of tank to impeller.

2. Drawings showing fabrication, assembly, installation and wiring diagrams.

B. Operation and Maintenance Manuals.

1. Submit in accordance with requirements of Section 1I3, Operation and Maintenance Data - 3 copies.

PART 2 PRODUCTS

2.1 SERVICE CONDITIONS

A. All mixers shall be single speed, vertical type as shown and specified. They shall be specially designed, constructed and installed for the service intended and shall comply with the following design conditions:

B. Design Conditions

1. Oxidation Tank/pH Adjustment Tank:

Location:	Interior
Use:	Air oxidation/pH adjustment
Liquid Mixed:	Groundwater
Tank Size:	14'-0" Dia, 6'-0" Height
Flow Rate:	90-180 gpm
Liquid Level:	Constant
Temperature:	Ambient
Solids:	< 100 ppm
pH:	5 - 10

2. Deaeration Tank/pH Adjustment Tank:

Location:	Interior
Use:	Deaeration/pH adjustment
Liquid Mixed:	Groundwater
Tank Size:	14'-0" Dia, 6'-0" Height
Flow Rate:	90-180 gpm
Liquid Level:	Constant during operation
Temperature	Ambient
Solids	< 100 ppm
pH	5 - 10

3. Final pH Adjustment Tank:

Location:	Interior
Use:	pH adjustment
Liquid Mixed:	Groundwater
Tank Size:	8'-0" Dia, 9'-0" Height
Flow Rate:	90-180 gpm
Liquid Level:	Constant
Temperature	Abmient
Solids	< 10 ppm
pH	10 - 5

4. Lift Station #3:

Location:	Interior
Use:	Lift station, wet well mixed to avoid settling of solids
Liquid Mixed:	Groundwater, iron sludge
Tank Size:	6'W x 6'L x 5'D
Liquid Level:	Variable during operation
Temperature	Ambient
Solids	200 - 500 ppm
pH	6 - 8

5. Mixing units shall be designed for continuous 24-hour per day, 7 day/week operation.
6. Sound pressure levels of the equipment shall not exceed 80 dbs at any point 3 feet from the equipment.

2.2 DETAILS OF CONSTRUCTION

A. Mixers:

1. Speed Reducers:
   a. Double or triple reduction units, with fully-enclosed helical gears.
   b. Lubrication: Lifetime grease system.
   c. All gear motors shall have an AGMA Class III gear rating. Gears shall be designed and rated for an AGMA service factor of not less than 1.5.
   d. Thermal rating of the speed reducer shall exceed the design mechanical rating to eliminate the need for external coolers.
   e. Speed reducer output shaft shall be constructed and supported such that shaft deflections caused by operating loads do not cause misalignment of the bearings or of the gearing. Output shaft shall be equipped with extra heavy tapered roller bearings.
   f. All bearings shall be antifriction type, oil lubricated, except for the lower output shaft bearing which may be grease lubricated. All bearings shall have a minimum B-10 life of 100,000 hours.
   g. Housing and Baseplate: Cast iron.

2. Impeller Shaft:
   a. Material: 316 stainless steel.
   b. Removable from drive unit.
   c. Maximum operating speed shall be less than 60 percent of first lateral critical speed. Bottom steady bearings are not acceptable.
   d. Total shaft runout shall not exceed 0.125 inches per 10 feet of shaft length.
   e. Maximum impeller shaft speed shall not exceed 70 rpm.
   f. Impeller shaft shall be connected to the gear reducer output shaft by a rigid flanged coupling welded to the shaft. Coupling shall be

designed to transmit any torque and withstand any bending moments which the coupling may be subject to. The unit shall be supplied with a flonge-mounted lip seal for atmospheric pressure on both sides of shaft seal. The seal shall be constructed of 316 stainless steel with teflon elastomers.

3. Impellers:
   a. Four (4) blade, 316 stainless steel, axial turbine type, keyed to the shaft.
   b. Blades shall be pitched at a maximum of 45 degrees from the horizontal, and bolted to the impeller hub.
4. Motors:
   a. Suitable for continuous operation, of sufficient horsepower to operate the mixer within the nameplate rating without overloading. All motors shall be built in accordance with current NEMA, IEEE and ANSI standards.
   b. Single speed, squirrel cage induction, TEFC, NEMA Design B. motor shall be suitable for operation on a 480 volt, 60 Hz, 3 phase supply, and shall include a 1.5 service factor. Motor speed shall not exceed 1800 rpm.
   c. Equipped with non-hygroscopic ball bearings of the extended duty type, grease or oil lubricated.
   d. Motor frame and shields shall be cast iron or heavy fabricated steel of such design and sizes as to hold the motor components rigidly in proper position. They shall be provided with lifting lugs and stainless steel rating nameplates indicating motor characteristics.
   e. Critical speed of the shaft and rotor assembly shall be at least 20 percent greater than maximum motor operating speed.
5. Product and Manufacturer:
   a. Lightnin Mixers.
   b. Philadelphia Mixers.

2.3 TOOLS, SPARE PARTS AND MAINTENANCE MATERIALS

A. Each mixer shall be furnished with the following:
   1. One set of each type of bearings used.

2.4 PAINTING

A. Equipment shall receive manufacturer's shop primer and standard protective coating system prior to shipment. Primer shall be compatible with field painting specified herein.

B. Machined, polished, and non-ferrous surfaces shall be coated with corrosion prevention compound.

PART 3 EXECUTION

3.1 INSTALLATION

A. Installation shall be in complete accordance with manufacturer's instructions and recommendations.

B. All electrical connections shall be in conformance with the requirements of Division 16, Electrical.

C. Once installation is complete, touch-up damaged paint with manufacturer supplied paint.

END OF SECTION 11222

SECTION 11224

SIDE ENTERING MECHANICAL MIXING EQUIPMENT

PART 1 GENERAL

1.1 SECTION INCLUDES

A. Furnish and install side entering mixers complete with motors, gears, and accessories.

1.2 GENERAL

A. All equipment shall be furnished by a single mixer manufacturer, who shall assume responsibility for proper alignment and operation of the complete mixing unit.

B. Drawings are for purposes of guidance and to show functional features required. They do not show all components required to accomplish the desired results or all components required to interface equipment. All parts, equipment and devices necessary to meet the functional requirements shall be provided.

C. Drawings are not intended to show exact dimensions peculiar to any specific mixing equipment. The dimensions of the mixer bases, may have to be changed in order to accommodate the equipment furnished.

D. All mixers shall be designed and built for the specified service, without overheating, without excessive vibration or strain, and requiring only that degree of maintenance generally accepted as peculiar to the specific type of mixer required.

1.3 RELATED SECTIONS

1. Division 03300, Concrete.

2. Section 09900, Painting.

3. Division 16, Electrical.

1.4 QUALITY ASSURANCE

A. Reference Standards: Comply with applicable provisions and recommendations of the following, except as otherwise shown or specified.

1. American Gear Manufacturers Association.

2. Anti-Friction Bearing Manufacturers Association.

3. Occupational Safety and Health Act.

4. National Electric Code.

5. National Electrical Manufacturers Association.

6. Institute of Electrical and Electronic Engineers.

7. American National Standards Institute.

8. Joint Industrial Council.

1.5 SUBMITTALS

A. Shop Drawings:

1. Manufacturer's literature, illustrations, specifications and engineering data for all equipment including:

   a. Dimensions.

   b. Materials.

   c. Size.

   d. Weight.

   e. Torque.

   f. Bending moment.

   g. Critical speed.

   h. Diameter of shaft.

   i. Shaft rpm.

   j. Impeller diameter.

   k. Pitch of impeller.

   l. Distance from bottom of tank to impeller.

2. Drawings showing fabrication, assembly, installation and wiring diagrams.

B. Operation and Maintenance Manuals.

1. Submit in accordance with requirements of Section 1I3, Operation and Maintenance Data - 3 copies.

PART 2 PRODUCTS

2.1 SERVICE CONDITIONS

A. Mixers shall be single speed, vertical type as shown and specified. They shall be specially designed, constructed and installed for the service intended and shall comply with the following design conditions:

B. Design Conditions:

C. Equalization Tank No. 1:

Location:	Exterior
Use:	Equalization
Liquid Mixed:	Groundwater with volatile organics
Tank Size:	21'-0" Dia, 20'-0" Height
Flow Rate:	90-180 gpm
Liquid Level:	Variable during operation
Volume	50,000 gallons

D. Equalization Tank No. 2:

Location:	Exterior
Use:	Equalization
Liquid Mixed:	Groundwater with volatile organics (toluene concentrations as high as 150 mg/l)
Tank Size:	12'-0" Dia, 15'-0" Height
Volume	12,000 gal
Flow Rate:	10-20 gpm
Liquid Level:	Variable during operation

2. Mixing units shall be designed for continuous 24 hour per day, 7 day/week operation.

3. Sound pressure levels of the equipment shall not exceed 80 dB at any point 3 feet from the equipment.

2.2 DETAILS OF CONSTRUCTION

A. Mixers:

1. Speed Reducers:

a. Double or triple reduction units, with fully-enclosed helical gears.

b. Lubrication: Lifetime grease system.

c. All gear motors shall have an AGMA Class III gear rating. Gears shall be designed and rated for an AGMA service factor of not less than 1.5.

d. Thermal rating of the speed reducer shall exceed the design mechanical rating to eliminate the need for external coolers.

e. Speed reducer output shaft shall be constructed and supported such that shaft deflections caused by operating loads do not cause misalignment of the bearings or of the gearing. Output shaft shall be equipped with extra heavy tapered roller bearings.

f. All bearings shall be antifriction type, oil lubricated, except for the lower output shaft bearing which may be grease lubricated. All bearings shall have a minimum B-10 life of 100,000 hours.

g. Housing and Baseplate: Cast iron.

2. Impeller Shaft:

   a. Material: 316 stainless steel.

   b. Removable from drive unit.

   c. Maximum operating speed shall be less than 60 percent of first lateral critical speed. Bottom steady bearings are not acceptable.

   d. Total shaft runout shall not exceed 0.125 inches per 10 feet of shaft length.

   e. Maximum impeller shaft speed shall not exceed 70 rpm.

   f. Impeller shaft shall be connected to the gear reducer output shaft by a rigid flanged coupling welded to the shaft. Coupling shall be designed to transmit any torque and withstand any bending moments which the coupling may be subject to. The unit shall be supplied with a shaft seal for atmospheric pressure on both sides of shaft seal.

3. Impellers:

   a. Four (4) blade, high efficiency, axial flow hydrofoil type, keyed to the shaft.

   b. Blades shall be pitched at a maximum of 45 degrees from the vertical, and bolted to the impeller hub.

4. Motors:

   a. Suitable for continuous operation, of sufficient horsepower to operate the mixer within the nameplate rating without overloading. All motors shall be built in accordance with current NEMA, IEEE and ANSI standards.

b. Single speed, squirrel cage induction, TEFC, NEMA Design B. motor shall be suitable for operation on a 480 volt, 60 Hz, 3 phase supply, and shall include a 1.5 service factor. Motor speed shall not exceed 1800 rpm.

c. Equipped with non-hygroscopic ball bearings of the extended duty type, grease or oil lubricated.

d. Motor frame and shields shall be cast iron or heavy fabricated steel of such design and sizes as to hold the motor components rigidly in proper position. They shall be provided with lifting lugs and stainless steel rating nameplates indicating motor characteristics.

e. Critical speed of the shaft and rotor assembly shall be at least 20 percent greater than maximum motor operating speed.

5. Product and Manufacturer:

a. Lightnin Mixers.

b. Philadelphia Mixers.

2.3 TOOLS, SPARE PARTS AND MAINTENANCE MATERIALS

A. Each mixer shall be furnished with the following:

1. One set of each type of bearings used.

2.4 PAINTING

A. Equipment shall receive manufacturer's shop primer and standard protective coating system prior to shipment. Primer shall be compatible with field painting specified herein.

B. Machined, polished, and non-ferrous surfaces shall be coated with corrosion prevention compound.

PART 3 EXECUTION

3.1 INSTALLATION

A. Installation shall be in complete accordance with manufacturer's instructions and recommendations.

B. All electrical connections shall be in conformance with the requirements of Division 16, Electrical.

C. Once installation is complete, touch-up damaged paint with manufacturer supplied paint.

END OF SECTION 11224

SECTION 11226

LAMELLA GRAVITY SETTLER/THICKENER SYSTEM

PART 1 GENERAL

1.1 SECTION INCLUDES

A. Furnish and install a Lamella Gravity Settler/Thickener System including flash-mix tank, flocculation tank, gravity thickener, sludge hopper and all required motors, controllers and controls.

1.2 RELATED SECTIONS

1. Section 03300, Concrete

2. Division 15, Mechanical

3. Division 16, Electrical

1.3 QUALITY ASSURANCE

A. Manufacturer shall have at least five (5(years experience in producing similar equipment, and shall show evidence of similar installations in satisfactory condition and operation.

B. Reference Standards:

1. Comply with applicable provisions and recommendations of the following, except as otherwise shown or specified.

a. AWS D1.1, Structural Welding Code.

b. ASTM A 36, Structural Steel.

c. National Electric Code.

d. Standards of National Electrical Manufacturers Assc.

e. Institute of Electrical and Electronic Engineers.

f. American National Standards Institute.

g. Standards of American Water Works Association

h. American Institute of Steel Construction.

i. American Gear Manufacturer's Association.

1.4 SUBMITTALS

A. Shop Drawings:

1. Submit for approval the following:

a. Manufacturer's literature, illustrations, specifications, and engineering data including: dimensions, materials, size and weight.

b. Fabrication, assembly, installation and wiring diagrams.

c. Provide setting drawings, templates and directions for the installation of anchor bolts and other anchorages.

d. Instrumentation and panel submittals in accordance with Section 13000, Instrumentation and Control.

e. Certified test data and curves for all associated pumps showing overall pump efficiencies, required net positive suction head, flow rate, head, brake horsepower, motor horsepower, speed and shutoff head.

B. Operation and Maintenance Manual:

1. Submit three (3) complete installation, operation and maintenance manuals including copies of all approved Shop Drawings.

PART 2 PRODUCTS

2.1 SERVICE CONDITIONS

A. The Lamella Gravity Settler/Thickener shall be designed, constructed and installed for the service intended, and shall comply with the following conditions:

Design Conditions:

Location:	Indoors
Use:	Heavy Metal Precipitation
Flowrate:	180 gpm
Wastewater Temperature:	Ambient
Influent pH:	6-10 units
Max. Hydraulic Loading:	0.4 gpm/foot square of plate area.
Plate Material:	FRP
Plate Angle:	55°-60°
Sludge Tank Diameter:	8'-0"feet
Sludge Tank Volume:	3,000 gallons (minimum)
Flash-Mix Retention Time:	20 seconds
Flocculator Retention Time:	25 minutes

Electrical Requirements	115 Volt AC

Flanged Nozzles:	
Influent	6-inch
Sludge Recycle	1-inch
Effluent	8-inch
Sludge Drain	2-inch
Sludge Recycle	2-inch

2.2 DETAILS OF CONSTRUCTION

A. General: The settling tank equipment shall conform with the following details of construction, materials and equipment.

1. All tanks, covers, supports, ladders, and all associated equipment shall be constructed of steel conforming to ASTM A-36, with a minimum thickness of 3/16-inch.

2. All gaskets shall be constructed of Teflon.

3. All weldments shall be designed and performed in strict conformance with AWS standards. Continuous welds shall be used for all seal welds and structural support welds. Intermittent welding shall be permitted for stiffener welds. All continuous seal welds are to be visually examined and dye penetrant tested in the shop.

B. Flash Mixer/Flocculator

1. Materials of Construction: All wetted parts shall be bitumastic epoxy coated carbon steel. The speed reducer shall have a close ground cast-iron housing. All gears shall be case hardened and precision ground. All bearings shall be extra heavy duty and shall be provided with a suitable means of lubrication.

2. The flocculator mixer drive shall be a variable speed mixer comprised of a paddle-type mixer with a hollow-shaft gear reducer. Maximum motor size shall be 3/4 hp. The mixer motor shall be TEFC.

3. The flash mixer drive shall be a rapid-fixed speed unit, comprised of a hollow-shaft gear reducer. The flash mixer motor shall not exceed 1/2 hp. The mixer motor shall be TEFC.

C. Plates:

1. Settler plates shall be constructed of fiberglass reinforced polyester (FRP) with a minimum thickness of 0.09 inches. Stiffeners shall run the full length of each plate, spaced on a maximum of 12-inch on centers. Plates shall be manufactured in rigid plate pack assemblies.

2. The number of plates required shall be determined by the manufacturer to comply with the overflow rate, based upon laboratory settling tests, on-site pilot tests, or past operating experience.

3. Influent shall enter the plates through openings located on the sides of the plates at a point that will assure an even flow distribution across the plate.

4. All plates shall be removable from the unit.

D. Sludge Storage Tank:

1. The sludge tank, included with the package unit, shall be epoxy painted carbon steel. The sludge tank shall include an externally driven, full length picket fence sludge scraper/thickener rake. The tank shall include (4) sample valves, a 24-inch diameter manway, and a sludge outlet. The tank shell shall have a minimum thickness of 1/4 inch and the tank bottom plate shall have a minimum thickness of 3/8 inch.

2. A sludge rake drive unit shall be provided and be mounted at the top of the tank. Motor enclosure shall be TEFC. The drive shall have a visual torque indicator showing percentage of load and two electrical contacts for alarm and shut-down. The rake shall have a stalled torque rating of 511 ft-lbs.

E. Controls:

1. Provide a NEMA 4 control panel for operation of the gravity settler/thickener drive units. Panel shall be equipped with all necessary controllers, door mounted controls and all other components required to provide a complete and functional system. The panel shall be suitable for mounting at the gravity thickener.

2. The panel shall be arranged to receive a 480 volt, 3 phase power supply with a ground. A main disconnect dive shall be provided to remove the service supply from the enclosure. Provisions shall be made to distribute 3 phase service to each drive motor. Provide separate power circuit breaker disconnect, controller and circuitry for each drive motor arranged in accordance with NEC requirements.

3. Controllers shall be of the AC and DC type. All AC type controllers shall be magnetic coil operated, NEMA rated, and shall include three melting alloy type overload relays with manual reset, visual trip indicators and heater elements. All DC controllers shall be SCR type, suitable for operation from a 120 volt, single phase input supply which converts to adjustable DC output for supply to each motor. Each SCR controller shall be equipped with an isolation transformer to isolate the incoming power from the power required at the controller.

4. Panel shall include all auxiliary controls powered from a suitably sized and protected control power transformer. The controls shall consist of all devices and components for the following operation:

   a. Stop/start push buttons for each drive motor arranged for momentary control.

b. Run pilot lights for each drive motor.

c. Master local-off-remote selector switch. In the local position, drives shall be controlled from panel stop/start push buttons. In the remote position, drives shall be controlled from remote start/stop momentary push buttons at the main control panel.

d. Manual speed rotentiometer shall be provided for each SCR controller.

e. Rake drive torque shutdown control with dry contact alarm indication at the main control panel.

f. Drive run status dry contacts for remote indication of each drive at the main control panel shall be provided.

F. Covers:

The flash mixer, flocculator, and clarifier sections shall include full, flat, bolted covers to minimize odors. All mixer and sludge drive shafts, shall include lip seals where they penetrate the cover. Provide a full teflongasket to seal between cover and clarifier rim. Each section of the clarifier will include a hatch to view chamber contents.

G. Painting:

1. Minimum acceptable surface preparation for any equipment furnished with the manufacturer's standard paint system shall include cleaning with a commercial sandblast (SSPC-SP6).

2. Drive equipment and control panels shall be cleaned and provided with the manufacturer's standard painting system for equipment in corrosive environments.

3. All carbon steel surfaces shall be painted as follows:

a. Exterior Surfaces:
Base Coat: DuPont High Solids Epoxy Mastic LF63325P, 2 coats, 5-6 dry mils total.
Finish: DuPont High Solids 50P Polyacryl Anhydride Enamel, 2 coats, 1.5- 2.5 dry mils total.

b. Interior Surfaces:
Base Coat: DuPont High Solids Epoxy Mastic LF63325P, 2 coats, 5-6 dry mils total.
Finish: DuPont Solids Epoxy Mastic LF-65M25P, 2 coats, 5-6 dry mils total.

c. Stainless steels, nickel, monel, lead Hastelloy, galvanized steel, rubber, plastic and/or fiberglass shall not be painted.

H. Lubricants:

The Manufacturer shall furnish an initial supply of all lubricants and oils required to operate the equipment and a lubricant specification with the type and grade to meet the service requirements of the equipment. The Manufacturer shall supply a chart listing type of lubricant or oil, place used, and corresponding product name and number.

I. Specials:

The Manufacturer shall furnish one (1) complete set of all special tools, new and in first-class condition, which are required for maintenance of the equipment herein specified. Identification of all tools by name and number shall be provided, and this number shall appear on drawings and instructions to indicate the application of the tools furnished and to permit ordering replacements. An itemized list of these tools shall be submitted.

PART 3 EXECUTION

3.1 INSTALLATION

A. Installation shall be in complete accordance with manufacturer's instructions and recommendations.

B. Provide all conduit and wire from the driven equipment to the control panel.

3.2 MANUFACTURER'S SERVICES

A. The CONTRACTOR shall furnish the services of a qualified factory-trained serviceman who shall assist in the installation of the settling equipment, check the installation before it is place into operation, assist with performance of the field tests required, assist with initial operations and instruct the operators with the care, operation, and maintenance of the equipment. A minimum of two (2) days training shall be provided by the manufacturer.

END OF SECTION 11226

SECTION 11247
LIQUID POLYMER FEED EQUIPMENT

PART 1 GENERAL

1.1 SECTION INCLUDES

A. Furnish and install one complete pre-engineered liquid polymer blending/feed system, including controls, rotameters, spare parts and all other appurtenances.

1.2 RELATED SECTIONS

1. Division 3, Concrete.

2. Section 05505, Anchor Bolts, Expansion Anchors, Toggle Bolts and Concrete Inserts.

3. Section 09900, Painting.

4. Section 13000, Plant Monitoring and Control System.

5. Division 15, Sections on Piping and Valves.

6. Division 16, Electrical.

1.3 QUALITY ASSURANCE

A. Manufacturer's Qualifications:

1. Manufacturer shall have experience in producing substantially similar equipment and shall show evidence of at least five (5) installations where

liquid polymer feed system of the type specified has been in satisfactory operation for a period of at least three (3) years.

B. Source Quality Control: All equipment shall be shop tested prior to shipment.

C. Reference Standards: Comply with applicable provision and recommendations of the following, except as otherwise shown or specified:

1. American National Standards Institute

2. Occupational Safety and Health Act

3. National Electric Code

4. Standards of National Electrical Manufacturers Association

5. Standards of Institute of Electrical and Electronics Engineers

6. Joint Industrial Council

D. Required Manufacturer's Services: Retain the services of a manufacturer's technical representative with experience in the installation and operation of the liquid polymer feed equipment to perform the following services:

1. Test, calibrate and adjust all components of the equipment.

2. Inspect the completed installations and prepare an inspection report.

3. Instruct operating personnel in the operation and user maintenance.

1.4 SUBMITTALS

A. Equipment Shop Drawings: Submit for approval the following:

1. Description of proposed equipment including materials of construction, weight and dimensions.

2. Installation drawings.

3. Electrical wiring and point-to-point connection drawings.

4. Manufacturer's literature, illustrations, specifications, and engineering data including dimensions, materials of construction, size, weight and motor information.

B. Operation and Maintenance Data: Submit complete manuals including:

1. Copies of all Shop Drawings, test reports, maintenance data and schedules, description of operation and spare parts information.

1.5 PRODUCT DELIVERY, STORAGE AND HANDLING

A. Equipment delivered to the job site shall be inspected by the CONTRACTOR for damage, unloaded and stored with a minimum of handling. Comply with manufacturer's recommendations in handling and storing equipment. All equipment shall be shipped in boxes or wooden crates. Shipments shall be made to the site by truck.

1.6 MANUFACTURER

A. Liquid polymer feed equipment shall be furnished by a single manufacturer who shall assume complete system responsibility. Liquid polymer feed equipment shall be supplied by PolyBlend by Stranco, Inc. or equal.

PART 2 PRODUCTS

2.1 PRE-ENGINEERED LIQUID POLYMER FEED EQUIPMENT

A. General: One (1) pre-engineered liquid polymer blending system shall be provided to meter, dilute, activate and feed concentrated liquid emulsion type polymers and water automatically. Concentrated neat liquid polymer at ambient temperatures and a pH of approximately 6 to 8 shall be mixed, activated and blended with water. Temperature limits of the polymer shall range between 33-100° F and dilution water temperatures shall range between 35-85° F. Maximum water pressure available to the unit before regulation is up to 60 psig. Ambient air conditions will vary between temperatures of 50 to 104° F.

B. Enclosure: Packaged polymer blender shall be furnished with either a stainless steel or plastic housing meeting NEMA 4 requirements.

C. Metering Pump:

1. Type: Self-priming diaphragm pump with variable stroke frequency and stroke length.

2. Operating Range: 200:1 minimum adjustable range.

3. Full Scale Capacity: 1.0 gph + of neat polymer at maximum 50 psig discharge pressure.

4. Diaphragm: TFE or TFE faced.

5. Ball Checks: Spring loaded single or double Type 316 Stainless steel or TFE balls on both suction/discharge ends.

6. Liquid Ends and Fittings: Type 316 Stainless steel or PVC.

7. Power Requirements: 120 volts, 60 Hertz, single phase power.

8. Metering pump shall be equipped with multi-function discharge valve for backpressure/anti-syphon, pressure relief, priming aid and for discharge line pressure vent purposes.

D. Features:

1. Maximum neat polymer output: 0-1.0 gph.

2. Dilution Water Flow and pressure: 5-50 gph maximum and 20-60 psig, respectively.

3. Electrical Input: 120 VAC, 60 Hz, single phase power.

4. All wetted parts in contact with polymer shall be constructed of plastic corrosion - resistant materials.

5. System shall be equipped with either 5-inch or 10-inch glass tube rotometer type flow indicator and a means to adjust water flow using an external flow control valve with external adjustment.

6. System shall be mounted within an enclosure rated for NEMA 4.

7. System shall be equipped with a sight flow indicator to show at a glance the flow and clarity of the polymer solution.

E. Controls:

1. System shall be equipped with a solenoid valve for on-off control of dilution water supply.

2. Solenoid valve shall be a 2-way unit and shall close on a low pressure alarm condition.

3. Control system shall be equipped with an "ON-OFF" power disconnect switch, a "Local-Off-Remote" mode switch, a system start switch, a low water pressure alarm light and an indicator light to indicate that the system is in operation.

4. Controls shall be provided to accept a start-stop momentary control signal from the remote Main Control Panel for remote control.

5. Mode selector switch at the feed unit shall control the operation of the polymer feed system. In the "A" position of the selector switch, a dry start-stop signal from The Main Control Panel shall control the operation of the polymer feed system automatically. In the "H" position of the selector switch, manual operation from the unit shall be possible.

6. Local circuitry shall be furnished to repeat a low water pressure alarm signal at a remote panel.

7. Packaged feed system shall be equipped with a time adjustable automatic flushing system. Flushing system shall begin to function when system mode selector switch is turned off and power to the metering pump shuts down. Maximum flushing time cycle shall be adjustable between 15-20 minutes.

8. An adjustable pressure switch shall be furnished at the dilution water inlet and shall function to shutdown the system and initiate a low pressure alarm locally and remotely when pressure drops below preset pressure. System shall reset automatically and restart when water pressure rises above preset pressure.

9. System shall be equipped with a repeat "running" status dry contact for connection to controls at the Main Control Panel.

2.3 ACCESSORIES

The following accessories shall be furnished with the liquid polymer blending system:

A. Calibration Column (1 Required):

1. Construction: Transparent, clear PVC graduated tube with bottom outlet and open top.

2. Calibration kit to be calibrated in milliliters.

3. Size: 250 ml minimum, 500 ml maximum.

4. Unit to be equipped with three PVC ball valves and outlet hose.

B. Wall-Mount Shelf:

1. Type: Shelf with mounting bracket.

2. Materials of construction: Type 304 or 316 Stainless Steel.

3. Hardware: Stainless steel.

4. Manufacturer: Stranco Model PB3030; or equal.

C. Backflow Preventer (1 Required):

1. Type: Reduced pressure principle.

2. Materials of Construction: All bronze with stainless steel internal parts and tight seating rubber check valve assemblies.

3. Unit shall be furnished with inlet and outlet gate valves and a Y-type bronze strainer with blow-off valve.

4. Size: 3/4 inch.

5. Tested and Certified by American Society of Sanitary Engineering Standard 1013 and AWWA C506.

6. Manufacturer: Watts Regulation Model 909; Mueller; or equal.

D. Pressure Gage (2 Required):

1. Dial Size: 4-1/2-inch.

2. Range: 0-100 psig.

3. Materials: Cast aluminum case with flanged back and phosphor bronze bourdon tube. Case shall receive a black epoxy coating.

4. Window: Acrylic.

5. Unit furnished with shut off valve and snubber.

6. Manufacturer: Ashcroft, Duragauge No. 1379 AS; U.S. Gauge; or equal.

E. Pressure Regulating Valve (1 Required):

1. Bronze body construction with renewable stainless steel seat.

2. Integral stainless steel strainer.

3. Union inlet connection with threaded tailpiece.

4. Size: 3/4-inch.

5. Reduced Pressure Range: 25-75 psig.

6. Manufacturer: Stranco Model PB4.5-3005; or equal.

F. Sight Flow Indicator (1 Required):

1. Size: 3/4-inch.

2. Type: To show at a glance the blended polymer solution flow and clarity of the discharge, single cylinder wall.

3. Ends: Screwed ends, FPT.

4. Materials of Construction: PVC ends with nitrile or viton seals; acrylic or pyrex wall.

2.4 SPARE PARTS

A. General: The following spare parts shall be furnished with the liquid polymer feeder:

1. One spare diaphragm type metering pump identical to unit furnished with feeder.

2. One spare multi-function discharge valve.

3. One spare solenoid valve identical to unit furnished with equipment.

4. One complete assembly pressure switch identical to unit furnished.

5. One mixing chamber.

2.5 LIQUID POLYMER UNLOADING EQUIPMENT

A. Drum Piping Assembly:

1. Number of units required: 1.

2. Type: Each unit shall contain a 3/4-inch stainless steel hose coupling, screwed drum fitting and a clear one-inch plastic sight gage assembly. Disconnect connection shall be equipped with a 3/4-inch check valve to prevent leakage and a 3/4-inch ball shutoff valve.

3. Suitable for bung hole opening.

B. Vent Assembly:

1. Number of units required: 1.

2. Size: 2-inch.

3. Connection: 2-inch suitable to connect to vent connection on a 55-gallon drum.

4. Length: 5 inches ±.

C. Liquid Feeder Suction Tubing:

1. Tubing shall be one-inch I.D. hypalon reinforced suction tubing equipped with a quick disconnect plug for hose connection on one end and a one inch ball valve with hose connection at the other end.

2. Ball valve shall have screwed and hose end connections.

2.6 DRUM MIXER

A. Type: Bayonet-mount drum mixer:

1. Materials of construction:

a. Shaft: Type 304 stainless steel.

b. Impeller: Type 304 stainless steel, collapsible design.

2. Mount: 2 inch bung hole opening, 1/4 inch thick flange.

B. Electrical:

1. Motor: 1/2-horsepower, TEFC, 1725 rpm.

2. Power: 120 volt, 60 Hz, single phase.

3. Cord: 3 wire, #18 AWG, 8 feet long with grounded plug and on-off switch. UL approved.

PART 3 EXECUTION

3.1 INSPECTION

A. Inspect equipment specified herein prior to installation. If equipment is damaged, notify the manufacturer immediately.

B. Damaged equipment shall not be installed until repairs are made in accordance with the manufacturer's written instructions and approved by the Engineer. Repairs shall be made under the manufacturer's direct supervision.

C. Inspect all concrete pads and bases for equipment for proper elevation, dimensions, cutouts, evenness and anchor bolt locations. Correct if required.

3.2 INSTALLATION

A. Installation of equipment shall be in complete accordance with manufacturer's instructions and recommendations.

B. Make all electrical connections in conformance with requirements of Division 16, Electrical.

C. Once installation is complete, touch up damaged paint with manufacturer's supplied paint.

D. Install all items to permit adjustment and calibration from floor or platforms without the use of ladders or scaffolding.

3.3 START-UP AND TESTING

A. The CONTRACTOR shall make adjustments required to place the plymer feed system in proper operating condition. The CONTRACTOR shall field test and calibrate the equipment to assure that the system operates in accordance with these Specifications and to the satisfaction of the ENGINEER.

B. Manufacturer's representatives shall check and approve the installation before operation and assist the CONTRACTOR in performing field tests and in the calibration of the equipment.

C. CONTRACTOR shall provide the services of a factory-trained operating specialist for one (1) 4-hour period for the instruction of the operating personnel.

END OF SECTION 11247

SECTION 11300
VERTICAL SUBMERSIBLE RECOVERY WELL PUMPS

PART 1 GENERAL

1.1 SECTION INCLUDES

A. Furnish and install two (2) vertical, submersible recovery well pumps.

1.2 RELATED SECTIONS

A. 1. Section 13400, Plant Monitoring and Control System

2. Division 15, Mechanical

3. Division 16, Electrical

1.3 QUALITY ASSURANCE

A. Manufacturer's Qualifications:

1. Manufacturer shall have experience in producing similar equipment, and shall show evidence of similar installations in satisfactory condition and operation.

B. Reference Standards: Comply with applicable provisions and recommendations of the following, except as otherwise shown or specified.

1. Standards of the Hydraulic Institute.

2. National Electric Code.

3. Standards of National Electrical Manufacturers Assc.

4. Institute of Electric and Electronic Engineers.

5. American National Standards Institute.

6. Standards of American Water Works Association.

1.4 SUBMITTALS

A. Shop Drawings: submit for approval Shop Drawings showing the following:

1. Manufacturer's literature, illustrations, specifications, and engineering data including: dimensions, materials, size and weight, flowrate, head, brake horsepower, motor horsepower, speed, shut-off head, performance data.

2. Shop drawings showing: Fabrication, assembly, installation and schematic wiring diagrams.

3. Certified test data and curves for all pumps showing overall pump efficiencies, required net positive suction head, flow rate, head, brake horsepower, motor horsepower, speed and shutoff head.

4. Operation and Maintenance Manuals: Submit three (3) complete installation, operation and maintenance manuals including copies of all approved Shop Drawings.

PART 2 PRODUCTS

2.1 SERVICE CONDITIONS

A. The well pumps shall be of the vertical submersible type. The pumps shall be designed, constructed and installed for the service intended, and shall comply with the following minimum conditions:

Design and Conditions:

Location	Production Area
Recovery Well PW-110	
Flowrate:	50 gpm
Temperature:	Ambient
pH:	6.5-7.5 units
Casing Diameter:	6-inch
TDH:	90 feet
Discharge Piping Size:	4-inch
Max. Motor size:	5 Hp

Design and Conditions:

Location	Production Area
Recovery Well PW-120	
Flowrate:	20 gpm
Temperature:	Ambient
pH:	6.5-7.5 units
Casing Diameter:	6-inch
TDH:	90 feet
Discharge Piping Size:	4-inch
Max. Motor size:	5 Hp

2.2 DETAILS OF CONSTRUCTION

A. General: The vertical submersible well pumps shall conform with the following details of construction and materials. The pumps shall be designed for continuous operation under submergence, without leakage.

1. Pump impellers and check valve shall be constructed of 304 stainless steel.

2. Bushings shall be constructed of bronze, ASTM B505 alloy 836.

3. The suction inlet shall be belled. A sand collar constructed of rubber shall be provided to protect the suction bearings from abrasives in the liquid to be pumped.

4. The impeller shall be enclosed and balanced. The impeller shall be securely fastened to the bowl shaft with taper collets, constructed of stainless steel, type 304.

5. The shaft shall be constructed of high chrome stainless steel, ASTM A2176, grade 304.

6. The pump suction shall include a stainless steel strainer. the net inlet area shall be equal to at least 5 times the impeller inlet area.

7. The coupling shall be constructed of 416 stainless steel and keyed to the pump shaft.

B. Motors:

1. The pump motor shall be of the submersible induction type designed for continuous under-water operation. Motor shall be suitable for operation on a 480 volt, 60 Hz, 3 phase supply.

2. The motor shall be designed with normal starting torque. The motor shall have a service factor of 1.50.

3. The motor shall be oil-filled and shall incorporate a mechanical seal to restrict foreign matter from entering the motor.

4. The motor shall be equipped with a factory-installed winding protection, suitable for mounting on the stator winding. The winding protection shall be of the thermostat type, temperature sensing with normally closed contacts.

5. Pump motor cables shall be designed for submersible duty and shall be indicated by code or legend permanently applied to cable.

C. Product and manufacturer: Provide the submersible vertical well pumps as manufactured by one of the following:

1. Grundfos Pumps Corporation

2. Or equal.

2.3 PAINTING

A. Pumps, motors, appurtenances shall receive the manufacturer's standard finish paint system prior to shipment.

PART 3 EXECUTION

3.1 INSTALLATION

A. Installation shall be in complete accordance with manufacturer's instructions and recommendations.

END OF SECTION 11300

SECTION 11350
HORIZONTAL CENTRIFUGAL PUMPS

PART 1 GENERAL

1.1 SECTION INCLUDES

A. Furnish and install horizontal pumps baseplate mounted complete and operational with motors, coupling, coupling guard, and shaft seal.

1.2 RELATED SECTIONS

1. Sections 15080, Piping, Smaller Than 4 Inches Diameter

2. Division 16, Electrical.

1.3 QUALITY ASSURANCE

A. Reference Standards: Comply with all applicable provisions and recommendations of the following, except as otherwise shown or specified.

1. Standards of the Hydraulic Institute.

2. National Electric Code.

3. Standards of National Electrical Manufacturers Association.

4. American National Standards Institute.

5. Standards of American Water Work Association.

B. Shop Tests:

1. Pump casings shall be hydrostatically tested to twice the discharge head or 1-1/2 times the shutoff head, whichever is greater.

1.4 SUBMITTALS

A. Shop Drawings: Submit for approval the following:

1. Manufacturer's literature, illustrations, specifications and engineering data include: dimensions, materials, size, weight, performance data and curves showing overall

pump efficiencies, flow rate, head, brake horsepower, motor horsepower, speed and shut-off head.

2. Shop Drawings Showing: Fabrication, assembly, and installation information.

3. Operation and Maintenance Manuals Including: Complete installation, operation, and maintenance data including. Recommended spare parts list for all components.

4. Pump test data.

5. Motor tests and data.

PART 2 PRODUCTS

2.1 SERVICE CONDITIONS

A. The pumps shall be specifically designed and constructed for the service intended and shall comply with the following minimum conditions:

Design Conditions	**Pump Name**				
	Equalization Tank # 1 Transfer Pump	Equalization Tank # 2 Transfer Pump	Lift Station # 1 Transfer Pump	Lift Station # 2 Transfer Pump	Lift Station # 3 Transfer Pump
1. No Required:	2	1	2	2	2
2. Service Conditions: Flow Rate (GPM)	170	10	180	180	25
TDH (ft)					
Suction Lift	Flooded	Flooded	Flooded	Self priming 6' lift	Self priming-6' lift
SG	1.05	1.05	1.05	1.05	1.05
pH Range	7-8	7-8	8-10	8-10	8-10
Temperature	Ambient	Ambient	Ambient	Ambient	Ambient
Wetted materials of construction	316SS	316SS	316SS	316SS	316SS

2.2 DETAILS OF CONSTRUCTION

A. Construction: All pumps shall be designed for continuous operation, 24 hours/day, 7 days per week without damage. The pumps shall conform to ANSI process pump design standards.

1. All non-wetted parts shall be mild steel, cast iron, or ductile iron per manufacturers standards.

2. Stuffing box seal shall be double mechanical seal design providing drip-tight operation and requiring no external lubrication.

3. Bearings shall be extra heavy duty type designed to provide less than 0.001 inch end play. Boring shall be oil lubricated.

B. Pump Drive:

1. Suitable for continuous operation with sufficient horsepower to cover the entire selected impeller curve.

2. Motors shall be built in accordance with current NEMA, IEEE, and NASI standards for single speed, squirrel cage induction motors.

3. Motors shall be TEFC type, wound for 3 phase, 60 Hz, 480V service with a 1.5 service factor. Motor speed shall not exceed 3600 RPM.

4. Motors shall be equipped with oil or grease lubricated, extended duty non-hygroscopic ball bearings.

5. Motor shall include a permanently attached stainless steel nameplate showing all motor characteristics.

C. Self Primary Pumps:

1. Pumps listed as self-priming or as having a suction lift will include an efficient self-priming casing.

2. Self priming casings shall be of the same materials of construction as other wetted parts.

3. Self-priming casing shall be an integral part of pump casing. Remotely mounted chambers are not acceptable.

2.3 PAINTING

A. Pumps, motors, drives, frames, baseplates, appurtenances, etc., shall receive manufacturer's standard finish paint system prior to shipment.

PART 3 EXECUTION

3.1 INSTALLATION

A. Installation shall be in complete accordance with manufacturer's instructions and recommendations.

B. Support piping independent of pumps.

3.2 START-UP AND TEST

A. CONTRACTOR shall verify that structures, pipes and equipment are compatible.

B. Make adjustments as required, to place system in proper operating condition.

END OF SECTION 11350

SECTION 11350

VAPOR PHASE TREATMENT SYSTEM

PART 1 GENERAL

1.1 SECTION INCLUDES

A. Thermal/Catalytic Oxidizer

1.2 RELATED SECTIONS

A. Section 11340 - Soil Vapor Extraction Equipment
B. Section 15060 - Soil Vapor Extraction Piping and Appurtenances
C. Section 15980 - Functional Description And Instrumentation and Controls

1.3 REFERENCES

1.4 SYSTEM DESCRIPTION

A. As required to meet vapor-phase discharge requirements, one (1) thermal/catalytic oxidizer vapor phase treatment system will be installed to reduce the effluent contamination levels to the necessary limits. This device will be set-up to operate using natural gas and will be provided with a flame arrestor and an exhaust heat exchanger to preheat the inlet air. The unit will be designed for ready changeover from thermal oxidation (LEL 80% maximum inlet concentration) to catalytic oxidation (LEL 30% maximum inlet concentration), as the combustible vapor concentrations decrease with time. This system will be fitted with an automatic temperatue-driven dilution air control system, complete with motor actuated dilution air valve (provided loose) and a high temperature shutdown/alarm. The device will meet the explosion-proof requirements of the equipment shelter. As a minimum, the combustion blower motor will be explosion-proof, and the control unit will be air purged.

1.5 SUBMITTALS

A. Submit under provisions of Section 1E4.

B. Shop Drawings: Indicate layout, general assembly, components, dimensions, weights, clearances, and methods of assembly.

C. Product Data: Provide manufacturer's literature, including general assembly, controls, wiring diagrams, and service connections.

D. Manufacturer's Installation Instruction: Indicate support details, connection requirements, and include start-up instructions.

E. Manufacturer's Certificate: Certify that thermal/catalytic oxidizer meets or exceeds specified requirements at specified operating conditions.

1.6 OPERATION AND MAINTENANCE DATA

A. Submit under provisions of Section 01700.

B. Operation Data: Include Manufacturer's instructions, start-up data, and trouble-shooting checklists.

C. Maintenance Data: Include Manufacturer's literature, cleaning procedures, replacement parts lists, and repairs data for vacuum blower, air filter, and extraction manifolds.

1.7 QUALIFICATIONS

A. Manufacturer: Company specializing in manufacturing the products specified in this Section with minimum three years documented experience.

B. Installer: Company specializing in performing the work of this Section with minimum 3 years documented experience.

1.8 DELIVERY, STORAGE, AND HANDLING

A. Delivery, store, protect and handle products to site under provisions of Section 1G9 and 1G17.

B. Accept thermal/catalytic oxidizer and components on site in factory packing. Inspect for damage. Comply with Manufacturer's rigging and installation instructions.

C. Protect thermal/catalytic oxidizer and components from physical damage including effects of weather, water, and construction debris.

PART 2 PRODUCTS

2.1 THERMAL/CATALYTIC OXIDIZER

A. Unit shall be provided by the manufacturer complete with all accessories including a flame arrestor, dilution air valve (provided loose), and a heat exchanger.

B. Skid: 60 in. x 147 in. (152.4 cm x 373.4 cm)

C. Stack: ID of 22 in. x 23 in. (55.9 cm x 58.4 cm)

D. Combustion Chamber: ID of 48 in. x 48 in. x 60 in. (121.9 cm x 121.9 cm x 152.4 cm)

E. Combustion Blower Motor: 3 hp (2.2 kw)

F. Burner: turndown ratio 20 to 1; maximum output capability 3,000,000BTU/hour

G. SCFM Rating: 1000 SCFM (28.3 m^3/min)

H. Calculated Operating Differential Pressure:
Max without Catalyst = 10 in. W.C.
Max with Catalyst = 15 in. W.C.

I. Performance:

1. Thermal Data

• SCFM added by combustion blower when fired on ratio	383 SCFM (10.9 m^3/min)
• total ACFM @ 1400°F (760°C)	4872 ACFM (138.0 m^3/min)
• burner chamber volume required for 0.5 seconds retention time @ 1400°F (760°C)	40.6 ft^3 (1.15 m^3)
• burner chamber volume required for 1.0 seconds retention time @ 1500°F (815°C)	85.6 ft^3 (2.424 m^3/min)
• stack velocity	
@ 500 SCFM (14.2m^3.min) from process stream	11.6 ft/sec (3.54 m/sec)
@1000 SCFM (28.3m^3.min) from process stream	23.1 ft/sec (7.04 m/sec)
• estimated weight, thermal unit only	2300 lbs (1043 Kg)

2. Catalytic Data

• SCFM added by combustion blower when fired on ratio	117 SCFM (3.3 m^3/min)
• total ACFM @ 600°F (315°c)	2242 ACFM (63.5 m^3/min)
• catalyst volume for 90% plus destructive efficiency	2.0 ft^3 (56,634 cm^3)
• inlet temperature	600°F (315°C)
• maximum concentrations	25% of the LEL

- stack velocity
  @ 500 SCFM ($14.2m^3$.min) from process stream 5.3 ft/sec (1.62 m/sec)
  @1000 SCFM ($28.3m^3$.min) from process stream 10.6 ft/sec (3.23 m/sec)

- estimated weight, thermal unit only plus catalytic module 2640 lbs (1198 Kg)

3. Operating Pressure Unit shall be designed to withstand two (2) times the expected operating differential pressure indicated above.

J. Dilution Air Valve: Shall be 6" nominal size, wafer or flanged style butterfly valve with NEMA 7 reversing electric actuator. Materials of construction must be compatible with toluene at a concentration of 1.5% in air. Other specifications may apply as determined by the Thermal/Catalytic Oxidizer System manufacturer.

PART 3 EXECUTION

3.1 INSTALLATION

A. Install in accordance with manufacturer's instructions.

B. Provide access space around thermal/catalytic oxidizer for service. Provide no less than minimum as recommended by manufacturer.

C. Insulate piping associated with thermal/catalytic oxidizer. Refer to Section 15260.

D. Provide for connection to electrical service. Refer to Section 16111.

E. Unit shall be set on existing pavement and leveled as indicated on the contract drawings.

3.2 FIELD QUALITY CONTROL

A. Perform flow test on entire system.

B. Require test to be witnessed by Engineer.

END OF SECTION

SECTION 11365
RECESSED PLATE FILTER PRESS

PART 1 GENERAL

1.1 SECTION INCLUDES:

A. Furnish and install the recessed plate filter press complete with hydraulic plate shifter CGR plates, filter cloths, drip tray, closing ram, blanking plate and controls.

1.2 GENERAL:

A. All equipment shall be furnished by a single manufacturer, who shall assume responsibility for proper alignment and operation of the complete unit.

B. Drawings are for purposes of guidance and to show functional features required. They do not show all components required to accomplish the desired results or all components required to interface equipment. All parts, equipment and devices necessary to meet the functional requirements shall be provided.

C. Drawings are not intended to show exact dimensions peculiar to any specific equipment. The dimensions of the press mounting base, may have to be changed in order to accommodate the equipment furnished.

D. All components shall be designed and built for the specified service, without overheating, without excessive vibration or strain, and requiring only that degree of maintenance generally associated with this type of equipment.

1.3 RELATED SECTIONS

1. Division 15, Sections on Piping.

2. Section 09900, Painting.

3. Division 16, Electrical.

1.4 QUALITY ASSURANCE

A. Manufacturer's Qualifications:

1. Manufacturer shall have at least five (5) years experience of producing substantially similar equipment and shall show evidence of at least five (5) installations where this type of equipment has been in satisfactory operation for a period of at least three (3) years.

B. Source Quality Control: All equipment shall be shop tested prior to shipment.

C. Reference Standards: Comply with applicable provision and recommendations of the following, except as otherwise shown or specified:

1. American National Standards Institute.

2. Occupational Safety and Health Act.

3. National Electric Code.

4. Standards of National Electrical Manufacturers Association.

5. Standards of Institute of Electrical and Electronics Engineers. 6. Joint Industrial Council.

D. Required Manufacturer's Services: Retain the services of a manufacturer's technical representative experienced in the installation and operation of the equipment to perform the following services:

1. Test, calibrate and adjust all components of the equipment.

2. Inspect the completed installations and prepare an inspection report.

3. Instruct operating personnel in the operation and user maintenance.

1.5 SUBMITTALS

A. Equipment Shop Drawings: Submit for approval the following:

1. Description of proposed equipment including materials of construction, weight and dimensions.

2. Installation drawings.

3. Electrical wiring and point-to-point connection drawings.

4. Manufacturer's literature, illustrations, specifications, and engineering data including dimensions, materials of construction, size, weight and motor information.

B. Operation and Maintenance Data: Submit complete manuals including three (3) copies of all Shop Drawings, test reports, maintenance data and schedules, description of operation and spare parts information.

1.6 PRODUCT DELIVERY, STORAGE AND HANDLING

A. Equipment delivered to the job site shall be inspected by the CONTRACTOR for damage, unloaded and stored with a minimum of handling. Comply with

manufacturer's recommendations in handling and storing equipment. All equipment shall be shipped in boxes or wooden crates. Shipments shall be made to the site by truck.

PART 2 PRODUCTS

2.1 SERVICE CONDITIONS

A. The press shall be sized to comply with the following minimum conditions:

1. Sludge Type: Metal Hydroxide, primarily iron.
2. Dry Solids Per Day: 138 lb
3. Press Cycles per Week (7 Days): 1 to 2
4. Press Cycle Time: 2-3 Hours
5. Filter Cake Dry Solids: 30-35% wt
6. Filter Cake Density: 75 lbs/cu ft
7. Minimum Press Capacity: 25 cu ft
8. Additional Expansion Capacity: 5 cu ft
9. Sludge pH Range: 6 - 10
10. Sludge Feed Rate: 25 gpm
11. Solids Content: 2,000 - 3,000 ppm
12. Temperature: Ambient

13. Maximum Cake Thickness: 1.25 inch

2.2 FILTER PLATES

A. Filter plates shall be center feed, alternating corner discharge design for operation at 100 psi pressure at ambient temperature. Plates shall be of the gasketed design. Gasketing shall be on the perimeter sealing surface and around each of the corner eyes. Plates shall come complete with filter cloths installed.

B. Recessed plates shall be molded from virgin, gray polypropylene and shall contain no fillers. Plates shall have a drainage surface design that shall provide adequate support for filter cloths and shall have integrally molded stayboss supports equally spaced on the drain field. Plate sealing surfaces shall be machined to a maximum parallel plane tolerance of .3 mm. Chamber recess depth dimension shall have a tolerance not to exceed .5 mm.

C. Plates shall have a round bottomed caulking groove machined around the perimeter of each drainfield for installation of filter cloths. Grooves of the dovetail design shall be machined around each corner port and around the cake chamber on the sealing surface for the installation of gasketing.

D. Filter cloths shall be polypropylene fabric. Fabric shall be heat set and calendared. Cloths shall have a monofilament fiber warp and a monofilament fiber weave. Cloths shall have a plain design weave. Cloths shall be held in place on the filter plates by a woven, high density polypropylene cord sewn into the perimeter of the cloth. It shall be pressed or caulked into place on the filter plate and held there by an interference fit.

E. Gasketing shall be molded Viton elastomer compound and shall be of the O-ring-type design. Gasketing shall have a minimum 70A durometer hardness.

F. The filter press shall be supplied with a back up plate to allow for the processing of less than a full capacity press load. The blank back-up plate shall be capable of being

inserted, along with the tail filter plate, at any point in the press plate stack to reduce the penetrating capacity of the filter press.

2.3 FILTER PRESS SKELETON

A. The filter press skeleton and related sub-components shall be designed to maintain the filter pack in a closed position against an internal operating pressure of 100 psi plus a minimum clamping factor of 25% greater than the maximum internal operating pressure multiplied times the filter area of the tail filter plate.

B. The filter press frame shall be fabricated of ASTM-A36 carbon steel plate and structures. Weldments shall be totally enclosed box construction for maximum strength and ease of maintenance. All weldments shall be designed to evenly distribute the operational forces developed during filtration over the entire component. All components shall be continuously welded with a fillet weld for maximum strength. Intermittent welding of joints shall not be acceptable. Enclosed compartments within the head end weldment shall have drain holes. All components shall be designed with a minimum safety factor of 1.5 times the maximum closure force. Critical assembly points such as sidebar/end weldment shall be machined to close tolerances to ensure uniform load distribution at all stress bearing areas.

C. All edges and welds shall be deburred and ground smooth. All weld splatter, weld slag and mill scale shall be removed before painting.

D. The head end weldment and the cylinder bracket shall be connected at two points each. Two side bars of hot rolled steel shall connect the head and cylinder bracket at the horizontal centerline of the plate pack so as not to interfere with cake discharge. Each connection point shall be designed with a minimum safety factor of 1.5 times the maximum closure force.

E. Each connection point shall have the intersecting components machined to tolerances that shall ensure proper fit.

F. The side bars shall be of sufficient size and weight to support the full operational weight of the filter plate pack including the follower head, plate pack and filter cake with a maximum deflection of 1/900 of the length of the filter press assembly.

To prevent corrosion of the sidebars due to surface finish erosion, the side bars shall come complete with 304 SS wear strips on the contact surface with plate suspension handles and follower head rollers.

The follower head sub-assembly shall be suspended from the side bars. The follower shall ride on Delrin rollers on stainless steel axles. Grease nipples shall be provided on the axles for periodic interspacial flushing of the roller/axle assembly.

All non-stainless steel metallic surfaces shall be finished for maximum corrosion resistance in accordance with the following:

A. Surface Preparation: Blast to SSPC-10, near white metal blast cleaned surface.

B. Primer: One coat, two component, chrome free, low VOC polyurethane primer @ 1.5 to 2.0 MDFT.

C. Finish: Two coats, single stage, two component acrylic urethane @ 1.5 MDFT each coat.

2.4 PNEUMATIC/HYDRAULIC CLOSURE

The pneumatic/hydraulic opening and closing system shall include one (1) double acting hydraulic cylinder and one (1) hydraulic power pack. The system shall be designed to automatically compensate for any thermal expansion or contraction of the plate stack as well as maintain the proper clamping force throughout the process cycle.

The pneumatic/hydraulic power pack shall contain an air driven hydraulic pumping module that shall clamp the press by pressurizing the hydraulic system after the plate pack is fully closed. The hydraulic pumping module shall be designed to only operate after the hydraulic

cylinder has been fully extended through the use of a pressurized oil reservoir. To minimize the use of the hydraulic pumping module, the press shall be opened by means of pressurizing the retraction stroke of the cylinder with compressed air. All hydraulic tubing, subject to system pressure, within the power pack and to and from the cylinder shall be of 304 type stainless steel and shall have a minimum burst pressure rating of 3.5 times the maximum operating pressure of the power pack. The power pack shall be fully enclosed in a fabricated steel cabinet for protection from damage and shall be easily accessible for maintenance from a full width hinged cabinet door. All components shall be modular for ease of maintenance.

2.5 CONTROLS

The filter press control panel shall be mounted to the hydraulic cylinder bracket and shall be NEMA 4. The control panel shall contain all necessary switches, gauges, valving and tubing. The panel shall come complete with two position selector switches for the following functions:

A. Air Supply, on/off

B. Filter press, open/close

C. Hydraulic Pump, on/off

D. Bombay Doors, open/close/auto

E. Air Blow Down Valve Sequence, on/off/auto

2.6 SEMIAUTOMATIC PLATE SHIFTER

The filter press shall be supplied with a semi-automatic plate shifter system that shall be designed to assure each plate is straightened and is perpendicular to the side bars prior to shifting. To maintain proper alignment, the shifter shall have Delrin rollers (V-notch on one side and spool type on the opposite) with sealed roller bearings and stainless steel shafts. The

rollers shall ride on 304 stainless steel rails. The plate shifter shall operate in a semi-automatic mode requiring operator initiation of each plate shifting sequence.

Shifter control shall be fully-automatic with "deadman" type, maintain contact button, hand-held lanyard.

2.7 PAINTING SYSTEM

A. Surface preparation: Blast to SSPC-10, near white metal blast cleaned surface.

B. Primer: One coat, two component, chrome free, low VOC polyurethane primer @ 1.5 to 2.0 MDFT (Mils Dry Film Thickness).

C. Finish: Two coats, single stage, two component acrylic urethane @ 1.5 MDFT each coat.

PART 3 EXECUTION

3.1 INSTALLATION

A. CONTRACTOR shall make all necessary field connections required to place the filter press system in proper operation in accordance with manufacturer's instructions and recommendations.

B. Coordinate location of water supply piping, drain and pump suction with field requirements.

C. Make all electrical connections in conformance with requirements of Division 16, Electrical.

3.2 FIELD PAINTING

A. Provide in accordance with Section 09900

3.3 START-UP AND TESTING

A. make all adjustments to place pumps, tanks and accessories in proper operation. He shall perform operating tests and calibrate equipment to ensure that the system operates in accordance with these Specifications and to the satisfaction of the OWNER.

B. Manufacturer's representative shall check and approve the installation before operation and assist CONTRACTOR in performing field tests and in calibration of the equipment.

C. CONTRACTOR shall provide the services of a factory-trained operating specialist for an eight hour period for the instruction of the operating personnel. The instruction period may not be consecutive.

END OF SECTION 11365

SECTION 11375
CENTRIFUGAL AIR BLOWERS

PART 1 GENERAL

1.1 SECTION INCLUDES

A. Furnish and install low pressure horizontal centrifugal type blowers complete with baseplate, drive, guards, silencer and air filter for the air oxidation tank.

1.2 RELATED SECTIONS

1. Section 15080, Piping Smaller Than 4 Inches Diameter.

2. Division 16, Electrical.

1.3 QUALITY ASSURANCE

A. Reference Standards: Complete with all applicable provisions and recommendations of the following standards:

1. National Electric Code.

2. Additional Electrical Manufacturers Association.

3. American National Standards Institute.

B. Shop Tests:

1. The blower shall be tested to ensure compliance with the specified performance curve and sound requirements.

1.4 SUBMITTALS

A. Shop Drawings: Submit for approval the following:

1. Manufacturer's literature, illustrations, specifications and engineering data including: dimensions, materials, size, weight, performance data and curves showing total inlet capacity versus discharge pressure, horsepower requirements, and speed.

2. Shop Drawings showing fabrication, assembly, and installation information.

3. Operation and maintenance manuals including complete installation, operation, and maintenance data with recommended spare parts list.

4. Blower test data.

5. Motor test data.

PART 2 PRODUCTS

2.1 GENERAL

1. Process Air Blower equipment furnished hereunder shall be as manufactured by Hoffman, or an approved equal.

2. Each air blower unit shall include a multi-stage centrifugal air blower driven by a check valve, couplings, coupling guards, air filter and discharge silencers, and all appurtenances so as to provide a complete and operable process air supply stem.

3. Each blower shall be factory assembled and tested prior to shipment.

4. Each blower shall be equipped with a filter-silencer to reduce noise levels to a maximum 85 dba.

2.2 SERVICE CONDITIONS

1. The blower shall provide 50 scfm air at 6 psig when operating at a temperature range of 32° - 95°F.

2. Blower will be mounted indoors.

2.3 DETAILS OF CONSTRUCTION

A. Construction: Blower will be designated for continuous operation 24 hours per day, 7 days per week.

1. Housing to be close grained cast iron with an aluminum impeller.

2. Seals shall be provided on compressor shaft at inlet and outlet head to prevent air leakage.

3. Blower shall include a structural or fabricated steel baseplate.

B. Blower Drive:

1. Suitable for continuous operation with sufficient horsepower to cover the entire selected impeller curve.

2. Motors shall be built in accordance with current NEMA, IEEE, and ANSI standards for single speed, squirrel cage induction motors.

3. Motors shall be TEFC type wound for 3 phase, 60 Hz, 480V service with a 1.5 service factor. Motor speed shall not exceed 3,600 rpm.

4. Motors shall be equipped with oil or grease lubricated, extended duty non-hydroscopic ball bearings.

5. Motor shall include a permanently attached stainless steel name plate showing all motor characteristics.

2.4 PAINTING

A. Blower, motor, frame, baseplate, ect. shall receive manufacturer's standard finish paint system prior to shipment.

PART 3 EXECUTION

A. Installation shall be incomplete agreement with manufacturers instructions and recommendations.

B. Support piping independently of blower.

3.2 STARTUP AND TEST

A. CONTRACTOR shall verify that structures, pipes and equipment are compatible.

B. CONTRACTOR shall make adjustments as required, to place system in proper operating conditions.

C. CONTRACTOR shall test installed unit for sound levels produced under normal operating conditions blower sound levels shall not exceed 85 dba when tested using ANSI SL.13-1971.

END OF SECTION 11375

SECTION 11400
ACTIVATED CARBON ADSORPTION SYSTEMS

PART 1 GENERAL

1.1 SECTION INCLUDES

A. Furnish and install a vapor-phase and aqueous phase, activated carbon adsorption systems including valves, pressure gauges and piping.

1.2 RELATED SECTIONS

1. Division 15, Mechanical

2. Section 13400, Plant Monitoring and Control System

3. Section 13435, Butterfly Control Valve

1.3 QUALITY ASSURANCE

A. Manufacturer's Qualifications: Manufacturer shall have experience in producing similar equipment, and shall show evidence of similar installations in satisfactory condition and operation.

B. Reference Standards:

1. Comply with applicable provisions and recommendations of Section 01091.

1.4 SUBMITTALS

A. Shop Drawings:

1. Submit for approval the following:
   a. Equipment arrangement and weights, detailed drawings, specifications and manufacturer's literature.
   b. Setting drawings, templates and directions for installation.
   c. Operation and maintenance manuals including six (6) copies of all approved Shop Drawings.

PART 2 PRODUCTS

2.1 VAPOR-PHASE ACTIVATED CARBON ADSORPTION UNITS

A. Genera:

The vapor-phase Activated Carbon Adsorption Units shall be designed to meet the following minimum conditions:

Purpose:	VOC Removal/Odor Control
Carbon Grade:	Reactivated
Unit Size:	22' x 8' x 8'
Carbon Weight:	12,500 lbs per unit
No. Required:	2
Inlet Size:	20-inch ID
Outlet Size:	20-inch ID
Total Flowrate:	2000 SCFM
No. of Beds/Unit:	2
Construction:	Epoxy carbon steel
Static Pressure:	0.5 psig
Temperature Rating:	150°F max
Unit Type:	Transportable

B. Product Manufacturer: Provide Vapor Phase Activated Carbon Adsorption Units as manufactured by one of the following:

1. Calgon Carbon Corporation - Vapor-pac 10
2. Or Equal

2.2 AQUEOUS-PHASE ACTIVATED CARBON ADSORPTION UNITS

A. The aqueous-phase Activated Carbon Adsorption Units shall be designed to meet the following minimum conditions.

Purpose:	VOC removal from groundwater
Flow:	180 gpm
Configuration:	Series or parallel flow
Mode:	Downflow with backwashing
Backwash Rate:	600 gpm
No. of Vessels:	2
Vessel Diameter:	8 feet
ASME Code:	75 psig at 150°F
Carbon Volume:	10,000 pounds per vessel
Influent:	6-inch
Effluent:	6-inch
Backwash:	6-inch
Carbon Transfer:	4-inch
Carbon Transfer Mode:	Slurry
Monway:	20-inch
Vessel:	Carbon steel with internal vinyl ester coating and external epoxy coating
Piping:	Carbon steel
Valves:	Butterfly, automatic

B. Product and Manufacturer: Provide aqueous-phase activated carbon adsorption units as manufactured by one of the following:

1. Calgon Carbon Corporation - Model 8

2. Or Equal.

PART 3 - EXECUTION

3.1 INSTALLATION

A. Install all Activated Carbon Adsorption Units in accordance with the manufacturer's instructions.

3.2 START-UP AND TESTING

A. CONTRACTOR shall verify that all required piping and equipment are compatible prior to start-up.

B. CONTRACTOR shall perform adjustments required to place the system in the proper operating condition as required by the OWNER.

END OF SECTION

SECTION 13120
PRE-ENGINEERED BUILDINGS

PART 1 GENERAL

1.1 SECTION INCLUDES

A. Modular, insulated metal wall and roof panel systems for the recovery walls.

1.2 REFERENCES

A. ASTM C-177.

B. ASTM E-84.

1.3 SYSTEM DESCRIPTION

A. Clear span, modular construction of structural, insulated sandwich panel for the roof and walls.

B. Roof slope: flat

C. Assembly: Free of rattles, racking, thermal stress creaking, and wind whistles.

1.4 DESIGN REQUIREMENTS

A. Thermal Resistance of Wall System: maximum R value of 34.

B. Thermal Resistant of Roof System: maximum R value of 34.

C. Members shall withstand dead load, snow load and wind loads calculated in accordance with Basic National Building Code (BOCA), latest edition and local and state amendments.

D. Exterior wall and roof system to withstand imposed loads with maximum allowable deflection of span = 1/180.

E. Assembly to permit movement of components without buckling, failure of joint seals, undue stress on fasteners or other detrimental effects, when subject to temperature range of 120 degrees F.

F. Size and fabricate wall and roof systems free of distortion or defects detrimental to appearance or performance.

1.5 SUBMITTALS

A. Product Data: Provide assembly dimensions, locations, connections, attachments and openings.

B. Provide wall and roof system dimensions; panel layout; general construction detail; anchorages and method of anchorage; and method of installation.

C. Provide anchor bolt settings, sizes and locations.

D. Manufacturer's Installation Instructions: Provide preparation requirements and assembly sequence.

1.6 QUALIFICATIONS

A. Manufacturer: Company specializing in manufacturing products specified under this Section with minimum three years documented experience.

B. Modular system shall meet minimum dead and live load requirements in accordance with New Jersey's Uniform Construction Code, and shall be approved by a professional engineer experienced in the design of this Work and licensed in the State of New Jersey.

1.7 REGULATORY REQUIREMENTS

A. Conform to applicable code for submission of design calculations and as required for acquiring permit.

B. Cooperate with regulatory agency or authority and provide all data as requested.

1.8 FIELD MEASUREMENTS

A. Verify that field measurements are as indicated.

1.9 WARRANTY

A. Provide ten (10) year warranty of any part against defects in materials or workmanship.

PART 2 PRODUCTS

2.1 MANUFACTURERS - BUILDING SYSTEM

A. Modular System by Bally Engineered Structures, Inc., Bally, PA (215)845-2311.

B. Or equal.

2.2 MATERIALS - WALL AND ROOF SYSTEM

A. Insulation: Urethane foam core classified by Underwriters Laboratories as having flame spread of 25 or lower and smoke generation of less than 450 in accordance with ASTM E-84-76. Panels shall also be approved by Factory Mutual as Class I building type.

B. Panels shall consist of interior and exterior metal skins formed with steel dies and roll-forming equipment and checked with gauges for uniformity and accuracy. Metal skins shall be placed into steel molds and liquid urethane injected between them. For extra rigidity, the exteriors of all vertical panels, except corners, shall have vertical grooves spaced on 5-3/4 inch centers. Urethane shall be foamed-in-place and when completely heat-cured shall bond to the metal skins to form a rigid 4-inch or 5-inch insulated panel. The insulation must retain dimensional stability in an operating temperature range of 90 degrees F to 250 degrees F dry heat. Panels shall be 100 percent urethane insulation. To insure tight joints, panel edges must have foamed-in-place tongues and grooves with flexible vinyl gasket also foamed-in-place on the interior and exterior of all tongue edges. Gaskets shall be resistant to damage from oil, fats, water, detergents, sunlight, and contaminated groundwater.

C. All panels except corner panels shall be made in 23 inch and 46 inch widths, and shall be fully interchangeable for easy assembly. Panels 11-1/2 inches and 34-1/2 inches wide are to be furnished only when required to fit the allocated space. To assure correct alignment and maximum strength, corner panels shall be 90 degree angles with exterior horizontal dimensions of 12 inches on each side.

D. Wall Anchors: Shall be supplied by the manufacturer and shall be proved to be adequate in size and number by Engineering calculations.

E. Shelter outside dimensions shall match the outside dimensions of the foundation wall and "Z" base drip edges shall be supplied by the manufacturer to prevent water damage to the base of the panel.

F. Panels shall be equipped with Bally "Speed Lok" joining devices. Distance between locks shall not exceed 46 inches. Each locking device shall consist of a cam-action, hooked locking arm of a replaceable type placed in one panel and a steel rod positioned in the adjoining panel, so that when the locking arm is rotated, the hook engages over the rod and draws the panels tightly together with cam-action. The locking arms and steel rods shall be housed in individual steel pockets set into the panel. Pockets on one side of the panel shall be connected to pockets on the other side, in width, by the use of 2 inch wide steel straps set into the insulation. When panels are joined together, these straps shall form "perimeters of steel," with lock-to-lock connections for extra strength. An aligning device shall be provided in at least one "Speed-Lock" pocket for every vertical panel. Press-fit caps shall be provided to close wrench holes. The required locking wrench shall be supplied.

G. Exterior Finish: .026 galvanized steel with sand tan polyester painted finish.

H. Interior finish: .026 galvanized steel with white polyester painted finish.

I. Roof: Shall be of similar construction as the walls, with a weatherproof .038 inch stucco-embossed aluminum outer finish.

J. Gutters and downspouts shall be provided by the building manufacturer as shown.

2.3 METAL DOORS AND FRAMES

A. Doors shall be 2 inch steel faced security doors with full urethane insulation core. Doors shall be supplied with weatherstripping and wiper gasket.

B. Jambs shall be heavy gage steel and sized to screw to building wall panels.

C. Entrance shall be a double leaf door without center post with clean opening of 72 inches by 84 inches.

D. Hardware for doors shall be Marks Model #2032ASP26D cylindrical lockset with satin stainless steel finish.

E. Door hinges shall be SOSS 450 tamperproof pinned butt hinges. Three hinges per door.

F. Weatherproof shields shall be installed above doors to divert rain and snow.

G. Sillplate shall be extruded aluminum plate.

2.4 FABRICATION - GUTTERS AND DOWNSPOUTS

A. Fabricate of same material and finish as roofing metal.

B. Form gutters and downspouts of standard profile and size to collect and remove water. Fabricate with connection pieces.

C. Form sections in maximum possible lengths. Hem exposed edges.

D. Fabricate support straps of same material and finish as roofing metal, color as selected.

PART 3 EXECUTION

3.1 EXAMINATION

A. Verify that foundation, floor slab, mechanical devices, electrical utilities, and anchors are installed as shown and specified.

3.2 ERECTION - WALL AND ROOFING SYSTEMS

A. Install in accordance with manufacturer's instructions.

B. Exercise care when cutting prefinished material to ensure cuttings do not remain on finish surface.

C. Install sealant and gaskets to prevent weather penetration.

3.3 ERECTION - GUTTER AND DOWNSPOUT

A. Rigidly support and secure components. Join lengths with formed seams sealed watertight. Flash and seal gutters to downspouts.

B. Apply bituminous paint on surfaces in contact with cementitious materials.

C. Slope gutters minimum 1/16 inch/foot.

3.4 INSTALLATION - ACCESSORIES

A. Install door frame and door in accordance with manufacturer's instruction.

B. Seal wall and roof accessories watertight and weather tight with sealant recommended by the building manufacturer.

3.5 TOLERANCES

A. Siding and Roofing: 1/8 inch (3 mm) from line and plumb over building height.

END OF SECTION 13120

SECTION 13121

SVE SYSTEM PROCESS TRAILER AND APPURTENANCES

PART 1 GENERAL

1.1 SECTION INCLUDES

A. Shop reconditioned and modified process equipment shelter (trailer).

B. Exterior doors, wood stairs, louvers, interior lighting, heating, air supply and exhaust ventilation, partition wall, and foundation requirements.

1.2 RELATED SECTIONS

A. Section 11340 - Soil Vapor Extraction System Equipment.

1.3 REFERENCES

A. ALSC - American Lumber Standards Committee: Softwood Lumber Standards.

B. APA: American Plywood Association.

C. Sealant and Waterproofer's Institute - Sealant and Caulking Guide Specification.

D. UL 305 - Panic Hardware.

1.4 SVE SYSTEM PROCESS TRAILER

A. A reconditioned 40- x 8-foot box trailer will be required to house major SVE process equipment and will be located at SWMU-11 as shown on the contract drawings. The trailer will be placed and anchored onto foundation supports to prevent movement. The foundation will be constructed such that stormwater can flow underneath the trailer.

The trailer will require internal modifications, such as additional exterior doorways, interior partition wall with door, noise insulation, lighting, heating, ventilation, and equipment installation. The exterior of the trailer must have a clean, neat appearance, including a fresh coat of paint.

1.5 SUBMITTALS

A. Submit under provisions of Section 1E4.

B. Product Data: Provide data describing design characteristics, materials, and finishes.

C. Shop Drawings: Indicate assembly dimensions, materials, exact position of access doors, stairs, and barrier wall. Indicate louver layout plan and elevations, opening and clearance dimensions, and tolerances.

D. Manufacturer's Certificate: Certify that Products meet or exceed specified requirements.

E. Manufacturer's Installation Instructions: Indicate special procedures, perimeter conditions requiring special attention, and rough in dimensions.

1.6 OPERATION AND MAINTENANCE DATA

A. Submit under provisions of Section 1I3.

B. Operation and Maintenance Data: Include data on start-up, troubleshooting, and operating hardware, cleaning and lubrication requirements, and inspection procedures related to preventative maintenance.

1.7 REGULATORY REQUIREMENTS

A. Conform to applicable code for closing operable louvers in conjunction with the fire and smoke alarm system.

B. Conform to applicable code for fire rated access units and fire retardant requirements.

C. Products Requiring Electrical Connection: Listed and classified by Underwriters Laboratories, Inc. as suitable for the purpose specified and indicated.

D. Cooperate with regulatory agency or authority and provide data as requested.

1.8 COORDINATION

A. Coordinate work under provisions of Section 01041.

B. Coordinate the work with installation of mechanical ductwork and electrical service to motorized devices.

C. Coordinate the work with plumbing, electrical, rough-in, and installation of associated and adjacent components.

1.9 WARRANTY

A. Section 01700 - Contract Closeout.

B. Provide a five-year warranty to include coverage for exterior pre-finished surfaces to cover pre-finished color coat against chipping, cracking or crazing, blistering,

peeling, chalking, or fading. Include coverage for weather tightness of building enclosure elements after installation.

C. Provide three-year warranty under provisions of Section 01700 for barrier wall.

D. Warranty: Include coverage of installed sealant and sheet materials which fail to achieve air tight and watertight seal, exhibit loss of adhesion or cohesion, or do not cure.

1.10 DELIVERY, STORAGE, AND HANDLING

A. Deliver, store, protect and handle products to site under provisions of Section 01600.

B. Protect work from moisture damage.

1.11 FIELD MEASUREMENTS

A. Verify that field measurements are as indicated on Drawings.

1.12 MAINTENANCE MATERIALS

A. Provide maintenance materials under provisions of 01700.

PART 2 PRODUCTS

2.1 EQUIPMENT SHELTER (TRAILER)

A. The reconditioned trailer must be sturdy and clean. All advertising and identification will be removed or permanently covered and the entire exterior shall be painted so the trailer will have a clean, neat appearance. The trailer roof and walls shall be leak-free.

B. The internal dimensions of the trailer shall meet the following requirements:

Internal Length $\geq$ 39'0"
Internal Width $\geq$ 7'3-1/2"
Internal Height $\geq$ 8'10"
(Ceiling Height)

C. Access

The process trailer doors (or roll-up) will be secured closed after the major equipment has been installed. This closure will be semi-permanent such that at a future date the access could be opened in the event process equipment must be removed and/or replaced. Carriage bolts through angle-iron or wooden blocking is acceptable.

Two steel, insulated exterior doors must be added to the trailer for regular access and emergency exit. Both exterior doors shall be constructed with 16 gauge steel frames and flanges and insulated steel paneled doors. The emergency exit door will have an emergency exit pushbar. The access door will have a rugged external locking mechanism used to secure the unmanned trailer, which can be disabled/disengaged/removed such that operator lock-in can be prevented. The access door will have a stairway and landing. The emergency exit requires a stairway only. Provide OSHA handrails as required.

D. Interior Partition Wall

The trailer will be partitioned into hazardous and non-hazardous zones with the addition of a wall and door. The wall will be tightly fitted and sealed with caulking or sealer to the trailer floor, walls and ceiling. The door will be plain, rugged, and will be gasket-sealed around all edges. The partition wall will be insulated and rough-finished with dry wall on both sides. This wall will prevent the ingress of potentially hazardous vapors from the VES treatment area into the positive (supply) air pressure in the controls space provide an additional safety factor as well as cooling and ventilation. The entire wall system shall be designed to withstand a minimum >8psf distributed load normal to the wall's surface due to the differential pressure generated by the air supply and exhaust ventilation fans.

The partition wall can be constructed of wood or steel studs and plates and covered with plywood and dry-wall or dry-wall only, provided wall system load requirements have been met.

E. Air Supply Ventilator

An air supply ventilator (Dayton Electric, as supplied by W. W. Grainger, Inc., P/N 3C405 or equal) will be installed in the power supply/control section of the trailer to provide a positive ventilation pressure at all times during system operation. It shall be suitably mounted on the roof of the trailer (with mounting curb) to pressurize and ventilate the electrical distribution/controls area of the trailer. It shall be rated to provide a minimum air flow of 1600 CFM at zero pressure, 850 CFM at 0.375-inch pressure.

F. Air Exhaust Ventilator/Intake Louver

An explosion-proof roof ventilator shall be installed on the trailer roof above the VES blower system, using an appropriate curb. The ventilator (McMaster-Carr Model 2207K42 or equal) will produce 2000 CFM at 0.25-inch static pressure minimum. Two 20- x 14-inch air intake louvers (McMaster Carr Model 2039K2 or equal) shall be installed through the trailer floor in a location as shown on the contract drawings.

G. Lighting

Eight (8) explosion-proof lighting fixtures fitted with 100 watt bulbs shall be installed along the peripheral length of the trailer walls on staggered centers, within 8 inches of the ceiling. The lighting circuit extends from the non-hazardous area into a potentially hazardous Class I, Division 2, area, and the electrical conduit should be sealed and connected accordingly.

H. Heating

One (1) explosion-proof (McMaster Carr P/N 1752K21 or equal) (Class I, Group D hazardous locations) 1800-watt heater shall be installed in the VES process area complete with thermostat. The main function of this heater is freeze protection. The thermostat can be set to energize the heater at 45°F (initial setting).

One (1) 1500-watt baseboard heater with thermostat (McMaster Carr P/N 1778K34 or equal) shall be installed in the electrical distribution/control area of the trailer. The thermostat setting shall be operator's preference.

I. Foundation

The process trailer will be supported at each corner and mid-section by concrete piers and wood blocking as shown on the contract drawings. As a minimum, the top of the pier will be 12 inches by 12 inches, and the base will be 18 inches by 18 inches. Two poured concrete anchors, minimum 12-inch-diameter depth of local frost will be set into the ground in line with the piers at each end and the centerline of the trailer. The trailer will be securely fastened to the anchors using heavy U-bolts, chain, and turnbuckles. Each component of this fastening system will be rated for a minimum working load of 6,000 pounds, and shall be arranged for maximum strength. Concrete shall have a minimum 28-day compressive strength of 3,000 psi.

The trailer should be temporarily placed into position to locate the anchor points and align the pier locations, and to verify the trailer interface details.

When the anchors and trailer fastening hardware have been prepared, the process trailer can be rolled into position, disconnected, blocked level, and securely fastened into place. Once everything is secure, the trailer wheels should be removed and placed in storage.

J. Fire Extinguisher

Provide one (1) 20 B:C rated fire extinguisher and mount on partition wall adjacent to doorway on the VES treatment area side (Hazardous Area).

PART 3 EXECUTION

3.1 EXAMINATION

A. Verify that prepared and rough openings are ready to receive work and opening dimensions are as instructed by the ventilator, door, and louver manufacturers.

B. Verify that piers and placed anchors are in correct position.

C. Verify electrical and building items affecting work of this section are placed and ready to receive this work.

D. Verify that electric power is available to power operated devices and of the correct characteristics.

3.2 INSTALLATION - PROCESS EQUIPMENT

A. Install 15 days after date fixed in Owner-Contractor Agreement.

3.3 INSTALLATION - LOUVERS

A. Install louver assembly in accordance with manufacturer's instructions.

B. Install louvers level and plumb.

C. Align louver assembly to ensure moisture shed from flashings and diversion of moisture to exterior.

D. Secure louvers in opening framing with exposed fasteners.

E. Install bird and insect screen and frame to exterior of louver.

F. Adjust and clean work.

G. Adjust operable louvers for freedom of movement of control mechanism. Lubricate operating joints.

3.4 INSTALLATION - ACCESS DOORS

A. Install units in accordance with manufacturer's instructions.

B. Install frames plumb and level in opening. Secure rigidly in place.

3.5 INSTALLATION - BARRIER WALL

A. Construct framing members full length without splices.

B. Set and secure materials and components in place, plumb and level.

C. Secure wall sheathing and or drywall with long dimension perpendicular to wall studs, with ends over firm bearing.

D. Calk all trailer and door frame interfaces with sealant to ensure complete seal.

END OF SECTION

SECTION 13200

SHOP FABRICATED TANKS

PART 1 GENERAL

1.1 SECTION INCLUDES

A. Vapor Vacuum and Water Extraction Tanks.

1.2 RELATED SECTIONS

A. Section 11340 - Soil Vapor Extraction Equipment

B. Section 9L - Painting

1.3 REFERENCES

A. ASME Boiler and Pressure Vessel Code, Section VIII, Division 1, "Pressure Vessels".

1.4 SYSTEM DESCRIPTION

As required for separation of vapor and liquid phases from six (6) extraction wells as part of the Soil Vapor Extraction system process, a quantity of one (1) Vapor Extraction Tank (120 gallon nominal capacity) and one (1) Groundwater Extraction Tank (120 gallon nominal capacity) will be required. The vapor extraction tank will serve to remove entrained liquids from the extracted soil vapor stream prior to delivery of vapors to the Vacuum Blower and Vapor Phase Treatment System and shall be equipped with controls to provide for the automatic removal of separated liquids. The Water Extraction Tank will serve as a hydropneumatic vacuum storage tank and will maintain a steady vacuum pressure to the groundwater extraction straws as well as provide draw capacity for the groundwater extraction pump system. The water extraction tank shall be equipped with controls to provide for automatic pressure and liquid level regulation.

1.5 SUBMITTALS

A. Submit under provisions of Section 01300.

B. Product Data: Provide manufacturer data including but not limited to Operation and Maintenance instructions, coating and compatibility data.

C. Manufacturer's Installation Instructions: Indicate special procedures for assembly and testing of tanks and components.

D. Form U-1A "Manufacturer's Data Report for Pressure Vessels" certifying conformance to ASME Boiler and Pressure Vessel Code.

1.6 DESIGN REQUIREMENTS

A. Tanks shall be shop fabricated and furnished with all fittings and features as specified.

B. All tanks shall have suitable lifting lugs for handling and placement in intended installed orientation.

C. All Tanks shall have prefabricated structural steel legs with pre-drilled mounting plates for vertical installation.

D. PERFORMANCE:

Capacity: Vapor Vacuum and Water Extraction Tank - 120 gallons (nominal).

Type: Vapor Vacuum and Water Extraction Tank - Vertical, Cylindrical, ASTM, ASME Code, exterior Dished Heads (Top and Bottom) with removable, flanged, top head. Designed for vacuum service (Vapor Vacuum Tank = 0-15 inches Hg, Water Extraction Tank = 0-Full Vacuum) in conformance with the design methods, manufacturing procedures and testing requirements of ASME Boiler and Pressure Vessel Code.

Material: Carbon Steel

Operating Temperature Range: 0° to 140°F

E. Fitting Schedules:

1. VAPOR VACUUM TANK

Quantity	Nom. Diameter (Inches)	Type	Location
1	8	Flanged Fitting	Lower tank shell, Tangential (C.C. direction)
1	6	Flanged Fitting with 18" internal drop tube	Top Head, axially centered.

Quantity	Nom. Diameter (Inches)	Type	Location
2	1	Screwed Fitting	Top Head, Vertical.
1	1	Screwed Fitting	Bottom Head, axially centered.
1	1½	Screwed Fitting	Lower Tank Shell
2	1	Screwed Fitting	Lower Tank Shell

2. WATER EXTRACTION TANK

Quantity	Nom. Diameter (inches)	Type	Location
1	2	Flanged Fitting	Upper tank shell
4	1	Screwed Fitting	Top Head, Vertical
1	2	Flanged Fitting	Bottom Head, axially centered..
1	1½	Screwed Fitting	Lower Shell

PART 2 PRODUCTS

2.1 MANUFACTURER/DISTRIBUTOR

A. Stoystown Tank & Steel Co.,Inc./The John Wood Co.,Valley Forge, Pennsylvania or Equal.

PART 3 EXECUTION

3.1 INSTALLATION

A. Install and Test in accordance with the manufacturer's instructions as well as ASME requirements.

END OF SECTION

SECTION 13201

GROUNDWATER PRETREATMENT SYSTEM STEEL TANKS

PART 1 GENERAL

1.1 SECTION INCLUDES

A. Design, fabricate, deliver, erect, and test the required steel tanks for the groundwater pretreatment system as shown and specified.

1.2 RELATED SECTIONS

1. Division 15, Piping.

2. Section 09900, Painting.

1.3 QUALITY ASSURANCE

A. Reference Standards:

1. Comply with applicable provisions and recommendations of the following, except as otherwise shown or specified:

a. AWWA D100, Standard for Welded Steel Tanks.

b. SSPC-SP6, Steel Structures Painting Counsel Standard for Commercial Blast Cleaning.

c. SSPC-SP10, Steel Structures Painting Counsel Standard for Near-White Blast Cleaning.

d. OSHA

1.4 SUBMITTALS

A. Shop Drawings:

1. Submit for approval the following:

a. Copies of detailed tank drawings. Drawings shall include all dimensions, sizes, plate thicknesses, anchorage, and piping details and details of all required accessories. Use welding symbols recommended by American Welding Society.

PART 2 PRODUCTS

2.1 TANKS

A. Air Oxidation Tank:

1. Diameter: 14'-0"

2. Sidewall Height: 6'-0"

3. Nominal Capacity: 7,000 gallons

4. Tank Geometry: Flat bottom, closed top,

5. Nozzles (150 lb flanges):

a. Inlet: 4-inch

b. Hydrogen Peroxide Feed: 1-inch on top

c. Caustic Feed: 1-inch on top

d. pH Probe: 4-inch on top

e. Air Exhaust: 6-inch on top

f. Mixer: 6-inch on top

g. Air Sparger: 4-inch on top

h. Outlet: 6-inch on tank sidewall

6. Manway: 24" diameter on top

7. Solution pH: 6-10

8. Temperature: Ambient

9. Solution SG: 1.05

10. Mixer Support Bridge

11. Tank Drain: 2-inch

12. Spare Nozzles: 4-inch (2 on top, 2 on sidewall)

B. Deaeration/pH Adjustment Tank:

1. Diameter: 14'-0"

2. Sidewall Height: 6'-0"

3. Nominal Capacity: 7,000 gallons

4. Tank Geometry: Flat bottom, closed top

5. Nozzles (150 lb flanges):

   a. Inlet: 6-inch on tank sidewall

   b. Caustic: 1-inch on top

   c. pH Probe: 4-inch on top

   d. Air Exhaust: 6-inch on top

   e. Mixer: 6-inch on top

   f. Outlet: 6-inch on tank sidewall

6. Manway: 24-inch diameter on top

7. Solution pH: 6-10

8. Temperature: Ambient

9. Solution SG: 1.05

10. Tank Drain: 2-inch

11. Mixer Bridge Support

12. Spare Nozzles: 4-inch (2 on top, 2 on sidewall)

C. Lift Station No. 1:

1. Diameter: 8'-0"

2. Sidewall Height: 9'-0"

3. Nominal Capacity: 3,000 gallons

4. Tank Geometry: Flat bottom, closed top,

5. Nozzles:

   a. Inlet: 8-inch on top

   b. Air Exhaust: 6-inch on top

   c. Level Control: 4-inch on top

   d. Organic Analyzer Return: 1-inch on top

   e. Pump Suction: 4-inch on sidewall

6. Manway: 24-inch diameter on top

7. Solution pH: 6-10

8. Temperature: Ambient

9. Solution SG: 1.05

10. Tank Drain: 2-inch

11. Spare Nozzles: 4-inch (2 on top, 2 on sidewall)

D. Final pH Adjustment Tank:

1. Diameter: 8'-0"

2. Sidewall Height: 9'-0"

3. Nominal Capacity: 3,000 gallons

4. Tank Geometry: Flat bottom,

5. Nozzles:

   a. Inlet: 4-inch on tank sidewall

   b. Outlet: 4-inch on tank sidewall

   c. Mixer: 6-inch

   d. pH probe: 4-inch on top

   e. Tank Drain: 2-inch

6. Solution pH: 6-10

7. Temperature: Ambient

8. Solution SG: 1.05

9. Mixer Support Bridge

10. Spare Nozzle: 4-inch (2 on top, 2 on sidewall)

E. Sludge Holding Tank:

1. Diameter: 12'-0"

2. Sidewall Height: 12'-0"

3. Nominal Capacity: 6,000 gallons

4. Tank Geometry: Cone bottom, closed top, vertical

5. Nozzles:

   a. Inlet: 2-inch on tank top

   b. Air Exhaust: 6-inch on tank top

   c. Recycle: 2-inch on tank top

   d. Overflow: 2-inch on tank top

   e. Drain: 2-inch on cone

   f. Sludge Taps: (4) 2-inch on cone

6. Manway: 24-inch diameter on top

7. Solution pH: 8-10

8. Temperature: Ambient

9. Solution SG: 1.05

10. Cone Angle (minimum): 45°

11. Spare Nozzles: 4-inch (2 on top, 2 on sidewall)

F. Minimum Steel Thickness:

1. The minimum thickness of any part of tank structure, shall be the larger of the following:

a. Steel sheet ASTM A 570, Grade 33 with a minimum yield strength of 33,000 psi. Minimum thickness shall be 12 gauge.

b. Steel plate shall conform ASTM A 36. Minimum yield strength shall be 36,000 psi.

c. Rolled structure shapes - ASTM A 36.

d. 1/8-inch greater than the minimum values specified in Section 3.10 of AWWA D100. Calculate minimum thickness values based on a wastewater with a specific gravity of (SG) = 1.05.

2.2 ACCESSORIES

A. Provide the following accessories for each tank.

1. Ladder:

a. Provide one steel ladder for each tank as shown and specified.

B. Mixer Bridge Support:

1. Provide a bridge support designed to carry the load, bonding moment and torque of the mixing equipment.

2.3 PAINTING SYSTEM

A. General:

1. Both the interior and exterior of the tank shall be painted with an protective coating system, as per specification 09900. All paint and paint products used for each system shall be the product of a single paint manufacturer.

PART 3 EXECUTION

3.1 GENERAL

A. Install all steel tanks in accordance with the manufacturers/suppliers recommendations.

END OF SECTION 13201

SECTION 13202
BOLTED EQUALIZATION TANKS

PART 1 GENERAL

1.1 SECTION INCLUDES

A. Design, fabricate, deliver, erect, and install a 50,000 gallon equalization tank and a 12,000 gallon equalization tank.

1.2 RELATED SECTIONS

1. Division 15, Piping.

2. Section 09900, Painting.

3. Section 11224 Side Entering Mechanical Mixing Equipment.

1.3 QUALITY ASSURANCE

A. Reference Standards:

1. Comply with applicable provisions and recommendations of the following, except as otherwise shown or specified:

a. API 12B, Bolted Steel Tanks.

b. SSPC-SP6, Steel Structures Painting Counsel Standard for Commercial Blast Cleaning.

c. SSPC-SP10, Steel Structures Painting Counsel Standard for Near-White Blast Cleaning.

1.4 SUBMITTALS

A. Shop Drawings:

1. Submit for approval the following:

a. Copies of detailed tank drawings. Drawings shall include all dimensions, sizes, plate thicknesses, anchorage, support, piping details and details of all required accessories.

PART 2 PRODUCTS

2.1 TANKS

A. General: Equalization Tank No. 1 (50,000 gallon capacity) shall be designed to meet the following general requirements.

1. Diameter: 21'-0"
2. Nominal Capacity: 50,000 gallons.
3. Height: 21'-0"
4. Type: Vertical.
5. Tank Cover: Dome shaped.
6. Tank Bottom: Flat.
7. Liquid S.G. ≅ 1.05.
8. Liquid to be Stored: Groundwater, VOC's
9. Tank Material: Carbon Steel, Epoxy Coated
10. Liquid Level: Variable.

Equalization Tank No. 2 (12,000 gallon capacity) shall be designed to meet the following requirements:

1. Diameter: 12'-0"
2. Nominal Capacity: 12,000 gallons
3. Height: 16'-0"
4. Type: Vertical
5. Tank Cover: Dome shaped
6. Tank Bottom: Flat
7. Liquid S.G.: ≅ 1.05

8. Liquid to be Stored: Groundwater (with toluene concentrations as high as 150 mg/L)

9. Tank Material: Carbon Steel, Epoxy coated

10. Liquid Level: Variable.

The equalization tanks shall be designed to be watertight and have zero leakage of material. The tanks shall also be designed to support and carry the impact and vibration loads developed by the tank mixing equipment under all scenarios.

B. Materials:

1. Sheet. Steel sheets shall conform to, or be at least equal to, hot-rolled quality per ASTM A570 Grade 33 with a minimum yield strength of 33,000 psi. Minimum thickness shall be 12 gauge (0.0972" minimum).

2. Plate. Steel plates shall conform to, or at least be equal to, the requirements of ASTM A36 with a minimum yield strength of 36,000 psi.

3. Rolled Structural Shapes. Rolled structural shapes shall conform to ASTM A36.

4. The minimum thickness of any part of tank structure shall be 1/8-inch greater than the minimum values specified by API 12B.

C. Tank Bolts:

1. All bolts used in tank joints shall be 1/2 inch diameter and shall be encapsulated with Blue Kynar (polyvinylvidene fluoride PVDF). A sealing ring shall be molded under the head of each bolt. The bolts shall be mechanically zinc-coated and the coating shall conform to the requirements of Class 55 of ASTM B 454 or to the coating thickness, adherence, and quality requirements of Class C of ASTM A 153. Mechanically zinc-coated nuts for assembly with mechanically zinc-coated bolts shall be tapped oversize prior to coating and shall not be retapped afterwards.

2. All other bolts shall conform to ASTM A307.

D. Gaskets: All bolted connections shall incorporate a 1-3/4" minimum width gasket. All gaskets shall be continuous and shall be constructed of nitrile. Neoprene-backed, galvanized steel washers shall be provided for all bolts in contact with stored liquid.

E. Product and Manufacturer: Provide the equalization tanks from one of the following:

2.2 ACCESSORIES

A. Provide the following tank accessories:

Equalization Tank No. 1

Connection	Size	No.	Rating/Notes
Manway	36-inch	2	Flanged 2 required
Influent	4-inch	1	150# F/F
Mixer	6-inch	2	150# F/F (with a lip seal) on tank sides
Effluent	4-inch	2	150# F/F
Level Control	4-inch	1	150# F/F
Backwash	6-inch	1	150# F/F
Spare	4-inch	4	150# F/F

Equalization Tank No. 2 (12,000 gallons):

Connection	Size	No.	Rating/Notes
Manway	24-inch	2	Flanged 2 required
Influent	2-inch	1	150# F/F
Mixer	4-inch	1	150# F/F (with a lip seal) on tank sides
Effluent	2-inch	2	150# F/F
Level Control	4-inch		150# F/F
Spare	4-inch	4	150# F/F

B. Piping Connections:

1. Provide influent, effluent piping connections and accessories as shown on the contract drawings. Pipe connections shall conform to requirements of Section 15A, Piping. The influent pipe shall be provided with a downcomer pipeline the same size as the influent line.

2.3 PROTECTIVE COATING SYSTEM

A. General:

1. Both the interior and exterior of the tank shall be supplied with a protective coating system. All interior steel surfaces shall be protected by a two-coat thermally-cured epoxy coating system. The coating system shall be suitable

for continuous contact with groundwater containing high concentrations of toluene. Minimum dry film thickness shall be 5.0 mils/coat. All exterior steel surfaces shall be protected by two coats of a thermally cured amine epoxy primer and acrylic enamel. Dry film thickness shall be a minimum of 3.0 mils/coat.

PART 3 EXECUTION

3.1 INSTALLATION

A. Except as otherwise shown or specified, tank shall be erected in accordance with the requirements of API-12B.

3.2 CLEANING

A. Exposed surfaces shall be protected from blemishes and stains during tank construction. If discoloration of exposed concrete results from painting, rusting or any other aspects of tank construction, it shall be removed to the satisfaction of ENGINEER.

3.3 TESTING

A. Following erection and cleaning, the equalization tanks, shall be filled to capacity and tested for a 24-hr period to ensure liquid tightness and zero leakage of material.

B. Any leaks noted during the testing period shall be corrected in accordance with the manufacturer's recommendations at no additional cost to the OWNER.

END OF SECTION 13202

SECTION 13410

GENERAL INSTRUMENTATION AND CONTROL REQUIREMENTS

PART 1 GENERAL

1.01 SECTION INCLUDES

A. Installation of:

1. Sensors and transmitters.

2. Instrumentation tubing, wiring and conduits.

3. Control panels.

4. Field wiring terminations within the control panels.

5. Cabling and termination devices for the Programmable Logic Controllers (PLC) area network.

B. Validation, operational testing, and training.

1.02 SYSTEM RESPONSIBILITY

A. The Contractor shall be responsible for:

1. equipment installation;

2. process and electrical connections; and

3. pre-startup checkout, in accordance with Specifications and as shown on the Drawings.

B. The Owner shall be responsible for:

1. instrument and control device procurement;

2. instrument calibration;

3. control panel procurement;

4. system validation;

5. system operational testing;

6. training; and

7. record drawings and documentation.

1.03 RELATED SECTIONS

A. Section 13422 - Pressure Transmitter.

B. Section 13427 - Level Transmitter-Continuous Level Sensor Element.

C. Section 13428 - Single Point Level Switch.

D. Section 13431 - Differential Pressure Transmitter.

E. Section 13435 - Butterfly Flow Valve-Pneumatic Actuated.

F. Section 13436 - Limitorque Quarter Turn Electric Valve Actuator/Positioner.

G. Section 13437 - Flow Meter-Magnetic.

H. Section 13450 - Control Panels.

1.04 REFERENCES

A. NFPA 70 - National Electrical Code.

B. NEMA ICS 1-101 - General Standards for Industrial Control and Systems.

1.05 RECORD DRAWINGS AND DOCUMENTATION

A. Record Drawings:

1. Reproducible drawings showing the work as actually constructed and labeled as "Record". Drawings to include:
   a. Process and Instrumentation Diagram.
   b. Complete instrumentation and control equipment descriptions.
   c. Equipment locations.
   d. Equipment installation details showing dimensions, physical configurations, mounting, process connections, and electrical connections.
   e. Loop Diagrams.
   f. Electrical schematics.
   g. Panel fabrication details.
   h. Graphic display details.
   i. Bill of materials.

B. Operation and Maintenance Manual:

1. Contents:
   The following information, as applicable, for each instrument, equipment, subsystem,

and/or control loop:

a. General introduction and overall description, purpose, functions, simplified theory of operations, etc.
b. Specifications.
c. Installation instructions, procedures, sequence, tolerances, and precautions.
d. Operational procedure.
e. Shut-down procedures.
f. Maintenance, calibration, and trouble shooting instructions.
g. Schematics and wiring diagrams.
h. Detailed circuit operational description.
i. Parts lists and spare parts recommendations.
j. Instrument calibration report.

2. Format:
   a. Drawings and pictorials to illustrate the text to the extent necessary to insure a clear, concise presentation.
   b. Where manufacturer manuals written to cover a family of similar instruments or equipment are included, inapplicable information may be struck out in a neat fashion or the applicable portion may be emphasized by heavily weighted arrows, circles, or boxes.

3. Binding:
   a. Standard 3-inch three ring binder(s).

C. System Validation Documentation:

1. Installation and Operational Qualification signed worksheets.

PART 2 REQUIREMENTS

2.01 SCOPE OF WORK

A. Contractor shall perform the following as shown on the drawings and as specified herein:

1. Install all instruments.

2. Provide and install instrumentation tubing, pipe, gaskets, bolting, fittings, wiring and conduits.

3. Install the control panels.

4. Install all field wiring terminations within the control panels.

5. Install cabling and termination devices for the PLC Area Network.

6. Verify correctness and integrity of all connections and terminations.

B. Owner shall:

1. Provide all instruments.

2. Provide pre-fabricated control panels.

3. Provide cabling and termination devices for the PLC Area Network.

4. Perform instrument calibration, system validation, operational testing, and training.

2.02 INSTRUMENT AND CONTROL DEVICE INSTALLATION

A. Mounting:

1. Mount instruments and control devices as indicated on the Drawings and in accordance with Supplier's recommendations. Supplier's recommendations shall govern in the event of a conflict.

2. Unless specified otherwise, mount instruments:
   a. Below their process connection point for pressure instruments;
   b. Level and plumb;
   c. Rigidly supported;
   d. Protected from excessive heat, cold, shock and vibration;
   e. Free of interference with piping, conduit, or other equipment;
   f. Near as possible to primary connections consistent with instrument accessibility.

3. Mount non-inline devices, instruments with calibration adjustments, or equipment requiring periodic adjustments so that the centerline is not more than 5-feet 0-inches or less than 3-feet 0-inches above grade, walkways, catwalks, or platforms.

B. Process Connections:

1. Provide instrument piping, tubing, block valves, fittings, and other process connections to meet the intended process service and ambient environmental condition for corrosion resistance as shown on the Drawings. Slope lines, as required according to service, to promote self-draining or venting back to the process.

2. Terminate connection to process lines or vessels in a service rated block valve that will permit closing off the sense line or removal of element without requiring shut down of the process.

3. Include drip legs and blow-down valves for terminations of sense lines at instruments when mounted such that condensation can accumulate.

C. Pneumatic Connections:

1. Terminate pneumatic process tubing as shown on the Drawings.

2. Tubing shall be instrument grade polyethelene for general industrial and chemical applications.

3. Individual tubes shall be neatly bundled and the bundles secured within metal channel or tray with self-locking polyethylene plastic ties.

4. Individual tubes shall be labeled with machine printed tie on plastic tags.

5. Drop lines to air line conditioning devices shall be attached to the top of main headers to reduce the amount of moisture that might run down to the devices.

6. All pneumatic tubing shall be free of sharp bends and kinks. Necessary turns shall have as large a radius as possible. Where it is necessary to clamp tubing, ensure that tubing is not crushed.

7. Conditioning devices shall be installed as close as possible to the point of use, consistent with accessibility for inspection and servicing.

D. Electrical Connections:

1. Unless furnished by the Owner as described above, provide wire, cables, conduits, fittings, and other electrical accessories in accordance with the Drawings and the National Electrical Code.

2. Where wires are terminated on screw terminals, insulated crimped locking fork lugs shall be used. Lugs shall be of the appropriate size for the terminal block screws.

3. Label individual wires and cables with the identification shown on the Drawings. Wire labels shall be the nonmetallic adhesive label or sleeve type with machine printed identification.

4. Neatly bundle individual wires and cables entering panels and enclosures and secure the bundles with self-locking plastic ties.

E. Equipment Indentification:

1. Provide identification tag for instruments not identified by the Supplier as shown on the Drawings. The tag shall be made of stainless steel with 3/16-inch high letters and attached with a stainless steel band with a worm screw clamping device or another method approved by the Owner. Tags shall be plainly visible to a standing observer.

F. Repair of Damaged Finishes:

1. Restore any damaged finish on all instrumentation equipment to the new condition.

G. Protection of Installed Instruments:

1. All field instruments installed shall be protected by covering with plastic sheeting until the instrument is ready to be put in operation at which time the Contractor shall remove all covers.

2.03 CONTROL PANELS

A. Mounting:

1. Mount control panels at locations shown on the Drawings. Ensure that panels are installed level and plumb. Verify that door of each panel may be fully opened without interference.

B. Electrical Connections:

1. Terminate power wires and signal cables on panel terminal blocks and label individual wires and cables with the identification shown on the Drawings. Wire labels shall be the nonmetallic adhesive label or sleeve type with machine printed identification.

2. Provide a separate ground wire from the power distribution panel to the panel ground point.

3. Neatly bundle individual wires and cables entering the enclosure and secure the bundles with self-locking plastic ties. Signal wiring shall be separated at least 6-inches from any power wiring.

C. Repair of Damaged Finish:

1. Restore any areas of damaged finish on the panels to new condition.

D. Protection of Installed Panel:

1. Each control panel shall be protected by covering with plastic sheeting until the panel is ready to be put in operation at which time the Contractor shall remove all covers.

2.04 PROGRAMMABLE LOGIC CONTROLLER AREA NETWORK INSTALLATION

A. Provide conduits, fittings, and other electrical accessories, except cable and cable connector devices which shall be furnished by the Owner, required to install the Modbus Plus Programmable Logic Controller Area Network as shown on the Drawings. Install network cable in either a separate conduit, or if installed on cable tray in an area at least 6-inches away from power conductors, to minimize electrical interference. Install cable connector devices per installation detail drawings.

PART 3 EXECUTION

3.01 INSPECTION

A. Owner shall inspect, prior to installation, each instrument and piece of equipment for damage, defects, and completeness.

B. Contractor shall inspect any previously installed related Work and verify that it is ready for installation of instruments and equipment.

3.02 PREPARATION

A. Contractor shall ensure that installation areas are clean and that dirt and dust generating operations are completed prior to installing instruments and equipment.

3.03 FIELD QUALITY CONTROL

A. System Validation

1. The Owner shall validate that system equipment is operational and performing its intended function within published equipment and system design specifications. The System Validation shall consist of two parts: Installation Qualification (IQ) and Operational Qualification (OQ).

B. Installation Qualification (IQ)

1. Installation Qualification shall include the verification of instrument calibration, commissioning of system equipment, evidence that the system conforms to design specifications and safety requirements, and development of preventive maintenance schedules.

2. The Owner shall be responsible for developing a separate written IQ Protocol for the system. Execution of the Protocol shall be the responsibility of the Owner. Forms specially prepared and part of the IQ Protocol shall be used to document and sign-off each step of the Protocol.

C. Operational Qualification (OQ)

1. Operational Qualification shall demonstrate that the system functions as designed with respect to process control and interlocks under a range of operating conditions. OQ shall include, but not be limited to, specified operational modes, taking process variables to their limits (simulated or process) to verify alarms, failure interlocks, and operational interlocks between systems and mechanical equipment, and criteria for system start-up.

2. Defects and malfunctions identified during OQ shall be immediately corrected with approved methods and materials and the OQ test repeated.

3. The Owner shall be responsible for developing a separate written OQ Protocol for the system. Execution of the Protocol shall be the responsibility of the Owner. Forms specially prepared and part of the OQ Protocol shall be used to document and sign-off each step of the Protocol.

3.04 OPERATIONAL TESTING AND FINAL ACCEPTANCE

A. Upon completion of system validation, operational testing of the system under nominal process conditions shall commence for a period of at least 90 days. During this period, defects and malfunctions identified shall be immediately corrected with approved methods and materials. Upon completion of final operational testing, a certified report shall be prepared by the Owner with substantiating data sheets, that the total control system meets the functional specifications. This shall constitute final acceptance.

3.05 TRAINING

A. The Owner shall prepare and execute a training program for operating and maintenance personnel. Vendor resources shall be used, where available, to assist in developing and implementing the training program.

END OF SECTION

SECTION 13415

FUNCTIONAL SPECIFICATION

PART 1 GENERAL

1.01 SUMMARY

A. This Section describes the Instrumentation, Control and Monitoring Systems (ICMS) for the Final Stabilization Action at the Ciba-Geigy Facility, Cranston, Rhode Island. The intent of this Section is to supplement, where applicable, other Sections of Division 13, and amplify information contained in other sections.

1.02 FUNCTIONS

A. The primary function of the ICMS shall be to provide centralized control and monitoring of each unit process for the treatment of extracted groundwater. Each ICMS will communicate to the Building 15 Control Room to provide visual and audible information on operating parameters, equipment status and alarm conditions.
B. Major constituents of the ICMS include an Analog Subsystem (AS), a Programmable Controller Subsystem (PCS) and Supervisory Computer and Data Aquisition (SCADA) system.

1.03 CONTROL PHILOSOPHY

A. For control purposes, the ICMS shall be divided into the following seven (7) Unit Processes:

1. Pumping Wells for Groundwater Extraction
2. Equilization
3. Air Oxidation and pH Adjustment
4. Clarification and Sand Filtration
5. Air Stripping
6. Granulated Activated Carbon Treatment (GAC)
7. Sludge Disposal

B. The ICMS shall be designed to run automatically with minimal operator interface. However, the capability shall be provided for limited local manual control of system operations. Critical functions and changes to the system configuration shall be permitted only after verification of security passwords.

1.04 FUNCTIONAL REQUIREMENTS

A. General:

1. The ICMS shall provide all of the functions described herein for each Unit Process. Major equipment items are specified for each Unit Process, however all items of equipment necessary to implement the required Unit Process performance shall be provided.

B. Format:

1. Functional requirements are grouped by Unit Process.
2. Each Unit Process is divided into four subheadings: Overview, Analog/Digital Subsystem Functions, Programmable Controller Subsystem Functions, Supervisory Control and Data Acquisition System Functions.
3. The Analog/Digital Subsystem Functions subheading is further divided into two sections: Sensors/Transmitters and Control.
4. The Programmable Controller Subsystem Functions subheading is further divided into four sections: Control, Data Acquisition, Interlocks and Alarms

C. Components:

1. Analog Subsystem:

a. Overview - Process Sensor/Transmitter Instruments: Process sensor/transmitter instruments shall measure pressure, pH, level and flow for Unit Processes 1 to 8 as specified herein. The instruments shall have the capability of communicating using the "HART" protocol for the purpose of transmitting process information and instrument status as well as providing a means for remote calibration. If "HART" compatible devices are not available, the specified instrument shall transmit a 4-20mA dc signal in linear proportion to the measured variable. The devices shall conform to the individual instrument specifications described in subsequent sections of Division 13.

2. Programmable Controller Subsystem:

a. Overview - Programmable Logic Controller (PLC): The Programmable Logic Controller shall provide all functions for Unit Processes 1 to 8 as specified herein and as shown on

the Drawings including:

(1) Execution of the appropriate Proportional Integral Deriviative (PID) loop control algorithm;
(2) Data acquisition from process sensors and conversion to engineering units;
(3) Totalization of elapsed runtime for all equipment items that have an ON/OFF status;
(4) Alternation of the lead pumps in the appropriate sumps at a preselected interval;
(5) Primary alarm detection and logging; and
(6) Interfacing with and supporting the Supervisory Control and Data Acquisition System.

b. Overview - Operator Interface (OI)
The Operator Interface shall consist of an Eaton PanelMate Series 1000 Video Control Panel equipped with a Modbus compatible driver for communication to the local PLC. The OI shall perform the following specific tasks:

(1) Display at operator's request operational status of the local Unit Process, Unit Process data, alarm indication and alarm logging;
(2) Provide operator access, using a minimum of keystrokes, to modify parameter values, change the status of ON/OFF equipment when required and to acknowledge alarms;

3. Supervisory Control and Data Acquisition System:

a. Overview: The Supervisory Control and Data Acquisition System shall consist of a Digital Equipment Corporation desktop computer running the WONDERWARE InTouch process monitoring and control software package under the Microsoft Disk Operating System (MS-DOS) and Windows Graphical User Interface program. The computer shall communicate to the PLC over a Modbus Plus link using a communications adapter board and software supplied by the PLC manufacturer. The InTouch software package shall provide a driver to read and write data to the PLC over the Modbus Plus link. The software package shall also act as the primary method of operator interface with the PLC through the means of keyboard, function keys and graphic displays (Man-Machine Interface (MMI)). The MMI shall perform the following specific tasks:

(1) Display at operator's request operational status of Unit Processes, Unit Process data, alarm indication and alarm logging;

(2) Provide operator access, using a minimum of keystrokes, to modify parameter values, change the status of ON/OFF equipment when required and to acknowledge alarms;
(3) Provide password protection to prevent entering of unauthorized changes;
(4) Display real-time trends of all analog/digital process data over an eight hour interval;

The SCADA functions shall perform the following specific tasks:

(1) Update the internal process database continually by scanning PLC input and output registers;
(2) Display information from the process database automatically on user created color graphic displays;
(3) Produce alarm messages based on specific conditions that occur in the process data base;
(4) Produce historical trend graphs on user selected data samples from the process data base; and
(5) Generate a user customized report, either on demand or automatically and direct the report to the video screen, the system printer, to a disk storage file, or other suitable output device.

D. Unit Process 1 - Pumping Wells for Groundwater Extraction (P&ID I2A & I2B)

1. Overview

a. The Pumping Wells for Groundwater Extraction shall deliver extracted groundwater into Equilization Tank T-300 via a 4" forced main header at an expected combined average flow rate of 60 gallons per minute (gpm) to a maximum of 90 gpm. Flow control from the individual Pumping Wells (PW) shall be accomplished by modulating an electrically actuated level control valve (LCV) to maintain a differential setpoint level between the Monitoring Wells (MW) and Stream Wells (SW).

b. The Pumping Wells for Ground Water Extraction Unit Process shall consist of two pumping wells (PW-110 and PW-120), two monitoring wells (MW-110 and MW-120), two stream wells (SW-110 and SW-120), two submersible well pumps (P-110 and P-120), six continuous level transmitters (LT-110A, LT-110B, LT-110C, LT-120A, LT-120B and LT-120C) two level switches (LS-110 and LS-120), two pressure control valves (PCV-110 and PCV-120), two flow transmitters (FT-110 and FT-120), two pressure transmitters (PT-110 and PT-120), two pressure indicators (PI-110 and PI-120), two level control valves (LCV-110 and LCV-120), two electric actuators (ZY-110 and

ZY-120) and eight hand switches (HS-110A, HS-110B, HS-110C, HS-110D, HS-120A, HS-120B, HS-120C, HS-120D).

c. Water from Pumping Well PW-110 shall be delivered at a rate sufficient to maintain a differential setpoint level between Stream Well SW-110 and Monitoring Well MW-110 of 1.7 feet as monitored by continuous level probes LT-110C and LT-110B, respectively.

d. Water from Pumping Well PW-120 shall be delivered at a rate sufficient to maintain a differential setpoint level between Stream Well SW-120 and Monitoring Well MW-120 of 0.5 feet as monitored by continuous level probes LT-120C and LT-120B, respectively.

2. Analog/Digital Subsystems Functions:

a. Sensors/Transmitters:
Measure the following parameters and transmit a digital signal to the local PCS (where XXX refers to the equipment/instrument at the appropriate well location):

(1) Level of Pumping Well (LT-XXXA).
(2) Level of Monitoring Well (LT-XXXB).
(3) Level of Stream Well (LT-XXXC).
(4) Flow rate of extracted groundwater from Pumping Well (FIT-XXX)
(5) Position of level control valve (LCV-XXX)
(6) Pumping Well discharge pressure (PT-XXX)

b. Control:

(1) Input HAND and AUTO selection for each pump motor (HS-XXXB).
(2) Input ON selection for each pump motor (HS-XXXC).
(3) Input OFF selection for each pump motor (HS-XXXD).
(4) Input FIELD DISCONNECT status for each pump motor (HS-XXXA).
(5) Input status of each pump motor starter auxillary (YY-XXX) at Motor Control Center (MCC) PCS.
(6) Input status of shelter security switch (YS-XXX).
(7) Input status of Level Control Valve (LCV-XXX).
(8) Input status of Pumping Well Level Transmitter (LT-XXXA).
(9) Input status of Monitoring Well Level Transmitter (LT-XXXB).
(10) Input status of Stream Well Level Transmitter (LT-XXXC).
(11) Input status of Flow Indicating Transmitter (FIT-XXX).
(12) Input status of Pressure Transmitter (PT-XXX).

3. Programmable Controller Subsystem Functions:

   a. Control:

      (1) If AUTO selected, provide ON-OFF function to Pump motor P-XXX.

(2) Provide feedback control of Well Pump P-XXX flow by transmitting a digital signal to LCV-XXX based on differential level of LT-XXXC and LT-XXXB. Feedback control loop shall have two modes: MANUAL and AUTO. In AUTO, level control valve position shall be adjusted until the differential level, as determined by measuring Stream Well level at LT-XXXC and Monitoring Well level at LT-XXXB, equals the setpoint. In MANUAL, level control valve position shall be adjusted by manually varying the loop output digital signal.
(4) Totalize runtime in minutes for pump P-XXX
(5) Provide means to reset each runtime totalizer if reset function selected.
(6) Provide failure indication output if pump P-XXX stops running when it is supposed to be in run state.
(7) Provide failure indication output if level contrl Valve LCV-XXX fails to travel to desired position.
(8) Provide indication output if LT-XXXA status changes.
(9) Provide indication output if LT-XXXB status changes.
(10) Provide indication output if LT-XXXC status changes.
(11) Provide indication output if FIT-XXX status changes.
(12) Provide indication output if PT-XXX status changes.
(13) Provide indication output if LCV-XXX status changes.

b. Data Aquisition:
Monitor the following parameters:

(1) HAND and AUTO selection indication for Pump P-XXX (HS-XXXB)
(2) Motor starter status for Pump P-XXX (YY-XXX) at MCC PCS.
(3) Local FIELD DISCONNECT status for Pump P-XXX (HS-XXXA).
(4) ON selection indication for Pump P-XXX (HS-XXXC).
(5) OFF selection indication for Pump P-XXX (HS-XXXD).
(6) Shelter security switch status for Pumping Well Enclosure XXX (YS-XXX).
(7) Status of LT-XXXA.
(8) Status of LT-XXXB.
(9) Status of LT-XXXC.
(10) Status of FIT-XXX.
(11) Status of PT-XXX.
(12) Status of LCV-XXX.

Scale to engineering units and store in memory:

(13) Pumping Well Level, LT-XXXA.
(14) Monitoring Well Level, LT-XXXB.
(15) Stream Well Level, LT-XXXC.
(16) Pumping Well Flow Rate, FIT-XXX
(17) Pumping Well Discharge Pressure, PT-XXX

(18) Level Control Valve Position, ZT-XXX.

c. Interlocks:

(1) Close LCV-XXX if: Pump P-XXX motor starter status (YY-XXX) off.
(2) Stop Pumping Well pumps (P-110 or P-120) if: Equilization Tank Level (LT-300) high high.

d. Alarms:

(1) Pumping Well Level (LT-XXXA) high.
(2) Pumping Well Level (LT-XXXA) high high.
(3) Pumping Well Level (LT-XXXA) low.
(4) Pumping Well Level (LT-XXXA) low low.
(5) Monitoring Well Level (LT-XXXB) high.
(6) Monitoring Well Level (LT-XXXB) high high.
(7) Monitoring Well Level (LT-XXXB) low.
(8) Monitoring Well Level (LT-XXXB) low low.
(9) Stream Well Level (LT-XXXC) high.
(10) Stream Well Level (LT-XXXC) high high.
(11) Stream Well Level (LT-XXXC) low.
(12) Stream Well Level (LT-XXXC) low low.
(13) Differential Level high.
(14) Differential Level high high.
(15) Differential Level low.
(16) Differnetial Level low low.
(17) Pumping Well Flow (FIT-XXX) high.
(18) Pumping Well Flow (FIT-XXX) high high.
(19) Pumping Well Flow (FIT-XXX) low.
(20) Pumping Well Flow (FIT-XXX) low low.
(21) Pumping Well Discharge Pressure (PT-XXX) high.
(22) Pumping Well Discharge Pressure (PT-XXX) high high.
(23) Pumping Well Discharge Pressure (PT-XXX) low.
(24) Pumping Well Discharge Pressure (PT-XXX) low low.
(25) Level Control Valve Position (ZT-XXX) failure.
(26) Pumping Well Level Transmitter (LT-XXXA) status change .
(27) Monitoring Well Level Transmitter (LT-XXXB) status change.
(28) Stream Well Level Transmitter (LT-XXXC) status change .
(29) Pumping Well Discharge Pressure Transmitter (PT-XXX) status change.
(30) Pumping Well Flow Indicating Transmitter (FIT-XXX) status change.
(31) Level Control Valve (LCV-XXX) status change.
(32) Pump P-XXX motor starter tripped.

4. Supervisory Control and Data Aquisition System Functions:

The Man-Machine Interface (MMI) function of the SCADA system shall display the following information:

(1) Process control loop parameters and mode.
(2) Mode and status of pump P-XXX

(3) Analog values of parameters listed in paragraph 3b items 7 to 12.
(4) Display cummulative runtimes of Pump P-XXX.
(5) Display alarm indications as listed in paragraph 3d. Provide means for alarm acknowledgement.
(6) Provide operator interface to:
Activate ON-OFF function to pump P-XXX;
Change differential flow control loop parameters and mode;
Reset runtime totalizer of pump.
(7) Provide real time trends of analog parameters listed in paragraph 3b items 7 to 12.
(8) Provide real time trend of differential level control loop output.

All Unit Process parameters listed in paragraph 3b and alarms listed in paragraph 3d shall be made available over the communication link to the host computer and the WONDERWARE graphical process interface software.

E. Unit Process 2 - Equilization
(P&ID I3)

1. Overview

a. The Equilization Unit Process consists of two tanks to receive the extracted groundwater from Unit Process 1 and the groundwater obtained from the Soil Vapor Extraction (SVE) Unit Process (See ABCDEFG for description of SVE system). The flow of groundwater from the Equilization Unit Process tanks is delivered at a rate sufficient to maintain at a setpoint level in each tank. Flow from the first floor tanks is delivered to the second floor Air Oxidation and pH Adjustment Unit Process (Unit Process 3) via a 4" carbon steel (CS) line. The ratio, at which the tank effluents are delivered, is determined by the Organic Analyzer monitoring the influent to the Air Stripper. An increase or decrease in organic concentration will result in an adjustment to this ratio to maintain a desired organic content in the Air Stripper influent.

b. The Equilization Unit Process shall consist of the extracted groundwater tank (T-300) and SVE groundwater tank (T-320), two side entry mixers (A-300 and A-320), three pumps (P-310, P-311 and P-330), two level transmitters (LT-300 and LT-320), two level switches (LS-300 and LS-320), seven pressure indicators (PI-300, PI-310A, PI-310B, PI-311, PI-320, PI-330A and PI-330B), two pressure transmitters (PIT-310 and PIT-330), two flow indicating transmitters (FIT-300 and

FIT-320), two level control valves (LCV-300 and LCV-320), two electric actuators (ZY-300 and ZY-320) and twenty hand switches (HS-300A, HS-300B, HS-300C, HS-300D, HS-310A, HS-310B, HS-310C, HS-310D, HS-311A, HS-311B, HS-311C, HS-311D, HS-320A, HS-320B, HS-320C, HS-320D, HS-330A, HS-330B, HS-330C, HS-330D).

c. The ratio of the combined effluents from tanks T-300 and T-320 shall be maintained based on the concentration of organics in the Air Stripper feed as determined by the Organic Analyzer (AIT-611 - P&ID I7, Unit Process 6). The ratio of the effluents shall be maintained by modulating level control valves LCV-300 and LCV-320.

d. The level of tanks T-300 and T-320 shall be maintained at setpoint conditions, in conjunction with the variable ratio of the effluent streams, by monitoring the level continuously at LT-300 and LT-320, respectively, and adjusting the flow rate accordingly to a maximum of 90 gpm.

2. Analog Subsystems Functions:

a. Sensors/Transmitters:
Measure the following parameters and transmit a digital signal to the local PCS:

(1) Level of Tank T-300 (LT-300).
(2) Level of Tank T-320 (LT-320).
(3) Discharge Pressure of either Pump P-310 or P-311 (PT-310).
(4) Discharge Pressure of Pump P-330 (PT-330).
(5) Effluent flow rate of Tank T-300 (FIT-300).
(6) Effluent flow rate of Tank T-320 (FIT-320).
(7) Position of T-300 Level Control Valve (LCV-300).
(8) Position of T-320 Level Control Valve (LCV-320).

b. Control:

(1) Input HAND and AUTO selection for agitator motor A-300 (HS-300B).
(2) Input ON selection for agitator motor A-300 (HS-300C).
(3) Input OFF selection for agitator motor A-300 (HS-300D).
(4) Input FIELD DISCONNECT status for agitator motor A-300 (HS-300A).
(5) Input status of agitator motor A-300 starter auxillary (YY-300) at Motor Control Center (MCC) PCS.
(6) Input HAND and AUTO selection for agitator motor A-320 (HS-320B).

(7) Input ON selection for agitator motor A-320 (HS-320C).
(8) Input OFF selection for agitator motor A-320 (HS-320D).
(9) Input FIELD DISCONNECT status for agitator motor A-320 (HS-320A).
(10) Input status of agitator motor A-320 starter auxillary (YY-320) at Motor Control Center (MCC) PCS.
(11) Input HAND and AUTO selection for pump motor P-310 (HS-310B).
(12) Input ON selection for pump motor P-310 (HS-310C).
(13) Input OFF selection for pump motor P-310 (HS-310D).
(14) Input FIELD DISCONNECT status for pump motor P-310 (HS-310A).
(15) Input status of pump motor P-310 starter auxillary (YY-310) at Motor Control Center (MCC) PCS.
(16) Input HAND and AUTO selection for pump motor P-311 (HS-311B).
(17) Input ON selection for pump motor P-311 (HS-311C).
(18) Input OFF selection for pump motor P-311 (HS-311D).
(19) Input FIELD DISCONNECT status for pump motor P-311 (HS-311A).
(20) Input status of pump motor P-311 starter auxillary (YY-311) at Motor Control Center (MCC) PCS.
(21) Input HAND and AUTO selection for pump motor P-330 (HS-330B).
(22) Input ON selection for pump motor P-330 (HS-330C).
(23) Input OFF selection for pump motor P-330 (HS-330D).
(24) Input FIELD DISCONNECT status for pump motor P-330 (HS-330A).
(25) Input status of pump motor P-330 starter auxillary (YY-330) at Motor Control Center (MCC) PCS.
(26) Input status of T-300 level transmitter (LT-300).
(27) Input status of T-320 level transmitter (LT-320).
(28) Input status of pump P-310 or P-311 discharge pressure transmitter (PT-310).
(29) Input status of pump P-330 discharge pressure transmitter (PT-330).
(30) Input status of T-300 flow indicating transmitter (FIT-300).
(31) Input status of T-320 flow indicating transmitter (FIT-320).
(32) Input status of T-300 level control valve (LCV-300).
(33) Input status of T-320 level control valve (LCV-320).

3. Programmable Controller Subsystem Functions:

a. Control:

(1) If AUTO selected, provide ON-OFF function to agitator motor A-300.
(2) Totalize runtime in minutes for agitator A-300.

(3) Provide means to reset each runtime totalizer if reset function selected.
(4) Provide failure indication output if agitator A-300 stops running when it is supposed to be in run state.
(5) If AUTO selected, provide ON-OFF function to agitator motor A-320.
(6) Totalize runtime in minutes for agitator A-320.
(7) Provide means to reset each runtime totalizer if reset function selected.
(8) Provide failure indication output if agitator A-320 stops running when it is supposed to be in run state.
(9) If AUTO selected, provide ON-OFF function to pump motor P-310.
(10) Totalize runtime in minutes for pump P-310.
(11) Provide means to reset each runtime totalizer if reset function selected.
(12) Provide failure indication output if pump P-310 stops running when it is supposed to be in run state.
(13) If AUTO selected, provide ON-OFF function to pump motor P-311.
(14) Totalize runtime in minutes for pump P-311.
(15) Provide means to reset each runtime totalizer if reset function selected.
(16) Provide failure indication output if pump P-311 stops running when it is supposed to be in run state.
(17) Alternate operation of pumps P-310 and P-311 at a selected time interval or a default runtime interval of seven days.
(18) If AUTO selected, provide ON-OFF function to pump motor P-330.
(19) Totalize runtime in minutes for pump P-330.
(20) Provide means to reset each runtime totalizer if reset function selected.
(21) Provide failure indication output if pump P-330 stops running when it is supposed to be in run state.
(22) Provide feedback control of Equilization Tank T-300 level by transmitting a digital signal to LCV-300. Feedback control loop shall have two modes: MANUAL and AUTO. In AUTO, level shall be maintained modulating LCV-300 until the level measured at LT-300 equals the setpoint. In MANUAL, LCV-300 may be manually modulated by varying the output digital signal until the desired level is acheived.
(23) Provide feedback control of Equilization Tank T-320 level by transmitting a digital signal to LCV-320. Feedback control loop shall have two modes: MANUAL and AUTO. In AUTO, level shall be maintained modulating LCV-320 until the level measured at LT-320 equals the setpoint. In MANUAL, LCV-320 may be manually modulated by varying the output digital signal until the desired level is acheived.

(24) Provide output indication if LT-300 status changes.
(25) Provide output indication if LT-320 status changes.
(26) Provide output indication if PT-310 status changes.
(27) Provide output indication if PT-330 status changes.
(28) Provide output indication if FIT-300 status changes.
(29) Provide output indication if FIT-320 status changes.
(30) Provide output indication if LCV-300 status changes.
(31) Provide output indication if LCV-320 status changes.

b. Data Aquisition:
Monitor the following parameters:

(1) HAND and AUTO selection indication for agitators A-300, A-320, pumps P-310, P-311, P-330 (HS-XXXB).
(2) ON selection for agitators A-300, A-320, pumps P-310, P-311 and P-330 (HS-XXXC).
(3) OFF selection for agitators A-300, A-320, pumps P-310, P-311 and P-330 (HS-XXXD).
(4) FIELD DISCONNECT status for agitators A-300, A-320, pumps P-310, P-311 and P-330 (HS-XXXA).
(5) Motor starter status for agitators A-300, A-320, pumps P-310, P-311 and P-330 (YY-XXX) at MCC PCS.
(6) Status of LT-300.
(7) Status of LT-320.
(8) Status of PIT-310.
(9) Status of PIT-330.
(10) Status of FIT-300.
(11) Status of FIT-320.
(12) Status of LCV-300.
(13) Status of LCV-320.

Scale to engineering units and store in memory:

(14) Equilization tank T-300 Level, LT-300.
(15) Equilization tank T-320 Level, LT-320.
(16) Pump P-310 or P-311 Discharge Pressure , PIT-310.
(17) Pump P-330 Discharge Pressure , PIT-330.
(18) Equilization tank T-300 Flow Rate, FIT-300.
(19) Equilization tank T-320 Flow Rate, FIT-320.
(20) Level Control Valve LCV-300 Position, ZT-300.
(21) Level Control Valve LCV-320 Position, ZT-320.

c. Interlocks:

(1) Stop Equilization Tank T-300 discharge pump (P-310 or P-311) if: Actuator Position (ZSL-300) low.
(2) Stop Equilization Tank T-320 discharge pump (P-330) if: Actuator Position (ZSL-320) low.
(3) Stop Equilization Tank T-300 discharge pump (P-310 or P-311) if: Tank Level (LT-300) low.
(4) Stop Equilization Tank T-320 discharge pump (P-330) if: Tank Level (LT-320) low.
(5) Stop Equilization Tank T-300 discharge pump (P-310 or P-311) and Equilization Tank T-320 discharge pump (P-330) if: Lift Station #1 (T-610) Level (LT-610) high high.
(6) Stop Equilization Tank T-300 discharge pump (P-310 or P-311) and Equilization Tank T-320 discharge pump (P-330)

if: combined flow rates (FIT-300 and FIT-320) greater than 90 gpm.

d. Alarms:

(1) Equilization Tank T-300 Level (LT-300) high.
(2) Equilization Tank T-300 Level (LT-300) high high.
(3) Equilization Tank T-300 Level (LT-300) low.
(4) Equilization Tank T-300 Level (LT-300) low low.
(5) Equilization Tank T-320 Level (LT-320) high.
(6) Equilization Tank T-320 Level (LT-320) high high.
(7) Equilization Tank T-320 Level (LT-320) low.
(8) Equilization Tank T-320 Level (LT-320) low low.
(9) Equilization Tank T-300 Pump P-310 or P-311 Discharge Pressure (PIT-310) high.
(10) Equilization Tank T-300 Pump P-310 or P-311 Discharge Pressure (PIT-310) high high.
(11) Equilization Tank T-300 Pump P-310 or P-311 Discharge Pressure (PIT-310) low.
(12) Equilization Tank T-300 Pump P-310 or P-311 Discharge Pressure (PIT-310) low low.
(13) Equilization Tank T-300 Flow (FIT-300) high.
(14) Equilization Tank T-300 Flow (FIT-300) high high.
(15) Equilization Tank T-300 Flow (FIT-300) low.
(16) Equilization Tank T-300 Flow (FIT-300) low low.
(17) Equilization Tank T-320 Flow (FIT-320) high.
(18) Equilization Tank T-320 Flow (FIT-320) high high.
(19) Equilization Tank T-320 Flow (FIT-320) low.
(20) Equilization Tank T-320 Flow (FIT-320) low low.
(21) Equilization Tank T-300 Level Control Valve Position (ZT-300) failure.
(22) Equilization Tank T-320 Level Control Valve Position (ZT-320) failure.
(23) Equilization Tank T-300 Level Transmitter (LT-300) status change .
(24) Equilization Tank T-320 Level Transmitter (LT-320) status change.
(25) Equilization Tank T-320 Discharge Pump P-310 or P-311 Pressure Transmitter (PIT-310) status change .
(26) Equilization Tank T-320 Discharge Pump P-330 Pressure Transmitter (PIT-330) status change.
(27) Equilization Tank T-300 Flow Indicating Transmitter (FIT-300) status change.
(28) Equilization Tank T-320 Level Control Valve (LCV-300) status change.
(29) Equilization Tank T-320 Level Control Valve (LCV-320) status change.
(30) Agitator A-300 motor starter (YY-300) tripped.
(31) Agitator A-320 motor starter (YY-320) tripped.
(32) Pump P-310 motor starter (YY-310) tripped.

(33) Pump P-311 motor starter (YY-311) tripped.
(34) Pump P-330 motor starter (YY-330) tripped.

4. Supervisory Control and Data Aquisition System Functions:
The Man-Machine Interface (MMI) function of the SCADA system shall display the following information:

(1) Process control loop parameters and mode.
(2) Mode and status of agitators A-300, A-320, pumps P-300, P-311 and P-330
(3) Digital values of parameters listed in paragraph 3b items 14 to 21.
(4) Display cummulative runtimes of Equilization Tank agitators A-300, A-320, pumps P-310, P-311 and P-311
(5) Display alarm indications as listed in paragraph 3d. Provide means for alarm acknowledgement.
(6) Provide operator interface to:
Activate ON-OFF function to agitators A-300, A-320, pumps P-310, P-311 and P-330;
Change Equilization Tanks T-300 and T-320 level control loop parameters and mode;
Reset runtime totalizer of each agitator and pump;
Change alarm setpoint value for digital parameters listed in paragraph 3b items 14 to 21;
(7) Provide real time trends of digital parameters listed in paragraph 3b items 14 to 21.
(8) Provide real time trend of level control loop output for Equilization Tanks T-300 and T-320.

All Unit Process parameters listed in paragraph 3b and alarms listed in paragraph 3d shall be made available over the communication link to the host computer and the WONDERWARE graphical process interface software.

F. Unit Process 3 - Air Oxidation and pH Adjustment
(P&ID I4)

1. Overview

a. The Air Oxidation and pH Adjustment Unit Process receives the combined effluents from Equilization Tanks T-300 and T-320 through a X" carbon steel line at a combined total flow rate not to exceed 90 gpm. The equilized groundwater enters the Air Oxidation Tank where the pH is adjusted to a value not less than 10 pH units by the addition of 20% sodium hydroxide. An air stream is introduced to the tank from a stand alone blower to convert the metal hydroxides to their

insoluble oxides for separation and removal from the process stream in Unit Process 3 (Clarification). In the event of blower failure, the system is equipped with a standby chemical oxidation system (H2O2). This system will be used for the oxidation of manganese in the treatment stream if present at concentrations greater than XX parts per million (ppm) or as the primary oxidation mechanism in the event of blower failure for an extended period of time. The effluent from the Air Oxidation Tank flows by gravity to the pH adjustment tank where the pH is monitored and maintained at 10 before discharge to Unit Process 3.

b. The Air Oxidation and pH Adjustment Unit Process consists of an air oxidation tank (T-400) and a pH adjustment tank (T-410), two top entry agitators (A-400 and A-410), a blower (B-405), three positive displacement chemical feed pumps (P-402, P-403 and P-404), three flow indicators (FI-402, FI-403 and FI-404), three pressure indicators (PI-402, PI-403 and PI-404), two pH probes (AE-400 and AE-410), two pH transmitters (AIT-400 and AIT-410), three level switches (LS-402, LS-403A and LS-403B), one flow switch (FS-405), three hand/off/auto switches (HS-402, HS-403 and HS-404) and twelve hand switches (HS-400A, HS-400B, HS-400C, HS-400D, HS-405A, HS-405B, HS-405C, HS-405D, HS-410A, HS-410B, HS-410C and HS-410D).

2. Analog Subsystems Functions:

a. Sensors/Transmitters:
Measure the following parameters and transmit a analog signal to the local PCS:

(1) pH of Tank T-400 (AIT-400).
(2) pH of Tank T-410 (AIT-410).

b. Control:

(1) Input HAND and AUTO selection for agitator motor A-400 (HS-400B).
(2) Input ON selection for agitator motor A-400 (HS-400C).
(3) Input OFF selection for agitator motor A-400 (HS-400D).
(4) Input FIELD DISCONNECT status for agitator motor A-400 (HS-400A).
(5) Input status of agitator motor A-400 starter auxillary (YY-400) at Motor Control Center (MCC) PCS.
(6) Input HAND and AUTO selection for agitator motor A-410 (HS-410B).
(7) Input ON selection for agitator motor A-410 (HS-410C).

(8) Input OFF selection for agitator motor A-410 (HS-410D).
(9) Input FIELD DISCONNECT status for agitator motor A-410 (HS-410A).
(10) Input status of agitator motor A-410 starter auxillary (YY-410) at Motor Control Center (MCC) PCS.
(11) Input HAND and AUTO selection for blower motor B-405 (HS-405B).
(12) Input ON selection for blower motor B-405 (HS-405C).
(13) Input OFF selection for blower motor B-405 (HS-405D).
(14) Input FIELD DISCONNECT status for blower motor B-405 (HS-405A).
(15) Input status of blower motor B-405 starter auxillary (YY-405) at Motor Control Center (MCC) PCS.
(16) Input HAND and AUTO selection for pump motor P-402 (HS-402).
(17) Input status of pump motor P-402 power relay auxillary (YY-402).
(18) Input HAND and AUTO selection for pump motor P-403 (HS-403).
(19) Input status of pump motor P-403 power relay auxillary (YY-403).
(20) Input HAND and AUTO selection for pump motor P-404 (HS-404).
(21) Input status of pump motor P-404 power relay auxillary (YY-404).
(22) Input status of 20% Sodium Hydroxide Tote "A" level switch (LS-403A).
(23). Input status of 20% Sodium Hydroxide Tote "B" level switch (LS-403B).
(24) Input status of Hydrogen Peroxide Tote level switch (LS-402).
(25) Input status of blower flow switch (FS-405).

3. Programmable Controller Subsystem Functions:

a. Control:

(1) If AUTO selected, provide ON-OFF function to agitator motor A-400.
(2) Totalize runtime in minutes for agitator A-400.
(3) Provide means to reset each runtime totalizer if reset function selected.
(4) Provide failure indication output if agitator A-400 stops running when it is supposed to be in run state.
(5) If AUTO selected, provide ON-OFF function to agitator motor A-410.
(6) Totalize runtime in minutes for agitator A-410.
(7) Provide means to reset each runtime totalizer if reset function selected.
(8) Provide failure indication output if agitator A-410 stops running when it is supposed to be in run state.

(9) If AUTO selected, provide ON-OFF function to blower motor B-405.
(10) Totalize runtime in minutes for blower B-405.
(11) Provide means to reset each runtime totalizer if reset function selected.
(12) Provide failure indication output if blower B-405 stops running when it is supposed to be in run state.
(13) If AUTO selected, provide ON-OFF function to 20% sodium hydroxide feed pump motor P-403.
(14) Totalize runtime in minutes for pump P-311.
(15) Provide means to reset each runtime totalizer if reset function selected.
(16) Provide failure indication output if pump P-311 stops running when it is supposed to be in run state.
(17) If AUTO selected, provide ON-OFF function to 20% sodium hydroxide feed pump motor P-404.
(18) Totalize runtime in minutes for pump P-404.
(19) Provide means to reset each runtime totalizer if reset function selected.
(20) Provide failure indication output if pump P-404 stops running when it is supposed to be in run state.
(21) If AUTO selected, provide ON-OFF function to hydrogen peroxide feed pump motor P-402.
(22) Totalize runtime in minutes for pump P-402.
(23) Provide means to reset each runtime totalizer if reset function selected.
(24) Provide failure indication output if pump P-402 stops running when it is supposed to be in run state.
(25) Provide feedback control of Air Oxidation Tank T-400 pH by transmitting an analog signal to the local PCS. Feedback control loop shall have two modes: MANUAL and AUTO. In AUTO, addition of 20% sodium hydroxide shall be delivered by activating pump P-403 until the pH measured at AIT-400 equals the setpoint. In MANUAL, pump P-403 may be activated to deliver 20% sodium hydroxide until the desired pH is acheived.
(26) Provide feedback control of pH Adjustment Tank T-410 pH by transmitting an analog signal to the local PCS. Feedback control loop shall have two modes: MANUAL and AUTO. In AUTO, addition of 20% sodium hydroxide shall be delivered by activating pump P-404 until the pH measured at AIT-410 equals the setpoint. In MANUAL, pump P-404 may be activated to deliver 20% sodium hydroxide until the desired pH is acheived.
(27) Provide timed control loop for the addition of Hydrogen Peroxide to Air Oxidation Tank T-400 in the event that manganese is present in the groundwater flow stream or if desired as a backup in the event of blower B-405 failure. Feedback control loop shall have two modes: MANUAL and AUTO. In AUTO, addition of hydrogen peroxide shall be delivered by activating pump P-402 for a pre-determined

time preiod at a preset time interval. In MANUAL, pump P-402 may be activated to deliver hydrogen peroxide until the quantity is added.

b. Data Aquisition:
Monitor the following parameters:

(1) HAND and AUTO selection indication for agitators A-400, A-410, blower B-405, pumps P-402, P-403 and P-404 (HS-XXXB).
(2) ON selection for agitators A-400, A-410 and blower B-405 (HS-XXXC).
(3) OFF selection for agitators A-400, A-410 and blower B-405 (HS-XXXD).
(4) FIELD DISCONNECT status for agitators A-400, A-410 and blower B-405 (HS-XXXA).
(5) Motor starter status for agitators A-400, A-410 and blower B-405 (YY-XXX) at MCC PCS.
(6) HAND and AUTO selection indication for pumps P-402, P-403 and P-404 (HS-XXX).
(7) Power relay status for pumps P-402, P-403 and P-404 (YY-XXX) at local PCS.

Scale to engineering units and store in memory:

(8) Air Oxidation Tank T-400 pH, AIT-400.
(9) pH Adjustment Tank T-410 pH, AIT-410.

c. Interlocks:

(1) Stop Equilization Tank T-300 discharge pump (P-310 or P-311) if: 20% Sodium Hydroxide Tote "A" and Tote "B" level switch (LS-403A and LS-403B) low.
(2) Stop Equilization Tank T-320 discharge pump (P-330) if: 20% Sodium Hydroxide Tote "A" and Tote "B" level switch (LS-403A and LS-403B) low.
(3) Activate Hydrogen Peroxide Feed Pump System if: Air Oxidation Blower B-405 flow switch (FS-405) low.
(4) Stop Equilization Tank T-300 discharge pump (P-310 or P-311) if: Air Oxidation Blower B-405 flow switch (FS-405) low and Hydrogen Peroxide Tote level switch (LS-402) low.
(5) Stop Equilization Tank T-320 discharge pump (P-330) if: Air Oxidation Blower B-405 flow switch (FS-405) low and Hydrogen Peroxide Tote level switch (LS-402) low.

d. Alarms:

(1) Air Oxidation Tank T-400 pH (AIT-400) high high.
(2) Air Oxidation Tank T-400 pH (AIT-400) high.
(3) Air Oxidation Tank T-400 pH (AIT-400) low low.
(4) Air Oxidation Tank T-400 pH (AIT-400) low.
(5) pH Adjustment Tank T-410 pH (AIT-410) high high.
(6) pH Adjustment Tank T-410 pH (AIT-410) high.
(7) pH Adjustment Tank T-410 pH (AIT-410) low low.
(8) pH Adjustment Tank T-410 pH (AIT-410) low.
(9) Agitator A-400 motor starter (YY-400) tripped.
(10) Agitator A-410 motor starter (YY-410) tripped.
(11) 20% Sodium Hydroxide Tote "A" level switch (LS-403A) high.
(12) 20% Sodium Hydroxide Tote "B" level switch (LS-403B) high.
(13) Hydrogen Peroxide Tote level switch (LS-402) high.
(14) Blower B-405 flow switch (FS-405) low.
(15) Pump P-402 power relay (YY-402) tripped.
(16) Pump P-403 power relay (YY-403) tripped.
(17) Pump P-404 power relay (YY-404) tripped.

4. Supervisory Control and Data Aquisition System Functions:
The Man-Machine Interface (MMI) function of the SCADA system shall display the following information:

(1) Process control loop parameters and mode.
(2) Mode and status of agitators A-400, A-410, pumps P-402, P-403, P-404 and blower B-405.
(3) Analog values of parameters listed in paragraph 3b items 6 and 7.
(4) Display cummulative runtimes of agitators A-400, A-410, pumps P-402, P-403, P-404 and blower B-405.
(5) Display alarm indications as listed in paragraph 3d. Provide means for alarm acknowledgement.
(6) Provide operator interface to:
Activate ON-OFF function to agitators A-400, A-410, pumps P-402, P-403, P-404 and blower B-405;
Change Air Oxidation Tank T-400 and pH Adjustment Tank T-410 pH control loop parameters and mode;
Reset runtime totalizer of each agitator and pump;
Change alarm setpoint value for analog parameters listed in paragraph 3b items 6 and 7;
(7) Provide real time trends of analog parameters listed in paragraph 3b items 6 and 7.
(8) Provide real time trend of pH control loop output for Air Oxidation Tank T-400 and pH Adjustment Tank T-410.

All Unit Process parameters listed in paragraph 3b and alarms listed in paragraph 3d shall be made available over the communication link to the host computer and the WONDERWARE graphical process interface software.

G. ▾Unit Process 4 - Clarification and Sand Filitration (P&ID I5 and I6)

1. Overview

a. The three stage Lamella Clarifier receives waste water from the pH adjustment tank (T-410) through a 6" carbon steel pipe. A flocculating polymer is added to the agitated flash mixing zone which overflows to the agitated flocculation zone prior to entering the gravity settling zone. The settled solids are periodically removed to the sludge holding tank by an air driven diaphragm sludge transfer pump or recycled to the clarifier by an air driven diaphragm sludge recycle pump.

b. The Dynasand Sand Filtration Unit receives clarified waste water from the Lamella Clarifier (T-500) through an 8" carbon steel pipe. The Sand Filter bed is under continual air sparging to facilitate removal of material that has passed through the clarifier. The waste stream is directed to Lift Station #3 (V-920; Ejector Station) via a 2" carbon steel line. Process waste is delivered to Lift Station #1 by an 8" carbon steel pipe.

c. The Clarifier Unit Process consist of the three stage Lamella Gravity Clarifir (T-500), flash mixing zone agitator (A-501), flocculation zone agitator (A-502), gravity settling zone agitator (A-503), two air driven diaphragm pumps for sludge transfer and recycle (P-504 and P-505, respectively), two air control solenoids (FY-504 and FY-505), one polymer addition pump (P-506), two level switches (LS-500 and LS-506), two pressure indicating transmitters (PIT-504 and PIT-505), one pressure indicator (PI-506), one flow indicator (FI-506), two pressure reducing valves (PRV-504 and PRV-505), three hand/off/auto switches (HS-504, HS-505 and HS-506) and twelve hand switches (HS-501A, HS-501B, HS-501C, HS-501D, HS-502A, HS-502B, HS-502C, HS-502D, HS-503A, HS-503B, HS-503C and HS-503D).

The Sand Filtration Unit Process consists of the Dynasand Sand Filtration Unit (F-600), one pressure control valve (PCV-600) and one flow switch (FS-600).

d. Recycling of the Clarifier sludge shall be accomplished by activation of the sludge recycle pump P-505 for a pre-determined time at a preset cycle time.

e. Wasting of the Clarifier sludge to the Sludge Holding Tank shall be accomplished by activation of the sludge transfer pump P-504 for a pre-deteremined time at a preset cycle time.

2. Analog Subsystems Functions:

a. Sensors/Transmitters:
Measure the following parameters and transmit a digital signal to the local PCS:

(1) Sludge Tranfer Pump P-504 discharge pressure (PIT-504).
(2) Sludge Recycle Pump P-505 discharge pressure (PIT-505).

b. Control:

(1) Input HAND and AUTO selection for agitator motor A-501 (HS-501B).
(2) Input ON selection for agitator motor A-501 (HS-501C).
(3) Input OFF selection for agitator motor A-501 (HS-501D).
(4) Input FIELD DISCONNECT status for agitator motor A-501 (HS-501A).
(5) Input status of agitator motor A-501 starter auxillary (YY-501) at Motor Control Center (MCC) PCS.
(6) Input HAND and AUTO selection for agitator motor A-502 (HS-502B).
(7) Input ON selection for agitator motor A-502 (HS-502C).
(8) Input OFF selection for agitator motor A-502 (HS-502D).
(9) Input FIELD DISCONNECT status for agitator motor A-502 (HS-502A).
(10) Input status of agitator motor A-502 starter auxillary (YY-502) at Motor Control Center (MCC) PCS.
(11) Input HAND and AUTO selection for agitator motor A-503 (HS-503B).
(12) Input ON selection for agitator motor A-503 (HS-503C).
(13) Input OFF selection for agitator motor A-503 (HS-503D).
(14) Input FIELD DISCONNECT status for agitator motor A-503 (HS-503A).
(15) Input status of agitator motor A-503 starter auxillary (YY-503) at Motor Control Center (MCC) PCS.
(16) Input HAND and AUTO selection for pump motor P-506 (HS-506).
(17) Input status of pump motor P-506 power relay auxillary (YY-506).
(18) Input HAND and AUTO selection for air driven diaphragm pump P-504 solenoid valve FY-504 (HS-504).

(19) Input HAND and AUTO selection for air driven diaphragm pump P-505 solenoid valve FY-505 (HS-505).
(20) Input status of Sludge Transmfer Pump Discharge Pressure Indicating Transmitter (PIT-504).
(21) Input status of Sludge recycle Pump Discharge Pressure Indicating Transmitter (PIT-505).

3. Programmable Controller Subsystem Functions:

a. Control:

(1) If AUTO selected, provide ON-OFF function to clarifier flash mixing zone agitator motor A-501.
(2) Totalize runtime in minutes for clarifier flash mixing zone agitator motor A-501.
(3) Provide means to reset runtime totalizer if reset function selected.
(4) Provide failure indication output if clarifier flash mixing zone agitator motor A-501 stops running when it is supposed to be in run state.
(5) If AUTO selected, provide ON-OFF function to clarifier flocculation mixing zone agitator motor A-502.
(6) Totalize runtime in minutes for clarifier flocculation mixing zone agitator motor A-502.
(7) Provide means to reset runtime totalizer if reset function selected.
(8) Provide failure indication output if clarifier flocculation mixing zone agitator motor A-502 stops running when it is supposed to be in run state.
(9) If AUTO selected, provide ON-OFF function to clarifier Lamella gravity settling zone agitator motor A-503.
(10) Totalize runtime in minutes for clarifier Lamella gravity settling zone agitator motor A-503.
(11) Provide means to reset runtime totalizer if reset function selected.
(12) Provide failure indication output if clarifier Lamella gravity settling zone agitator motor A-503 stops running when it is supposed to be in run state.
(13) Input status of Polymer Drum level switch (LS-506).
(14) Input status of Lamella Gravity Settling Zone level switch (LS-500).
(15) If AUTO selected, provide ON-OFF function for clarifier air driven Sludge Transfer Pump P-504.
(16) Totalize runtime in minutes for clarifier Sludge Transfer Pump P-504
(17) Provide means to reset runtime totalizer if reset function selected.
(18) Provide failure indication output if clarifier Sludge Transfer Pump P-504 stops running when it is supposed to be in run state by monitoring pump output pressure at

PIT-504.

(19) Provide timed based control of Sludge Recycle Pump P-505 by activating air solenoid FY-505 once daily for a predetermined time period. Control loop shall have two modes: MANUAL and AUTO. In AUTO, air solenoid FY-505 shall be activated and maintained until countdown timer has expired. In MANUAL, air solenoid FY-505 may be activated and maintained until de-activation command has been issued or thirty minute "fail-safe" timer has expired.

(20) If AUTO selected, provide ON-OFF function for clarifier air driven Sludge Recycle Pump P-505.

(21) Totalize runtime in minutes for clarifier Sludge Recycle Pump P-505.

(22) Provide means to reset runtime totalizer if reset function selected.

(23) Provide failure indication output if clarifier Sludge Recycle Pump P-505 stops running when it is supposed to be in run state by monitoring pump output pressure at PIT-505.

(24) Provide timed based control of Sludge Recycle Pump P-505 by activating air solenoid FY-505 once daily for a predetermined time period. Control loop shall have two modes: MANUAL and AUTO. In AUTO, air solenoid FY-505 shall be activated and maintained until countdown timer has expired. In MANUAL, air solenoid FY-505 may be activated and maintained until de-activation command has been issued or thirty minute "fail-safe" timer has expired.

(25) Input status of Compressed Air flow switch (FS-600).

(26) Provide output indication if PIT-504 status changes.

(27) Provide output indication if PIT-505 status changes.

b. Data Aquisition:
Monitor the following parameters:

(1) HAND and AUTO selection indication for agitators A-501, A-502, A-503 (HS-XXXB)

(2) ON selection for agitators A-501, A-502 and A-503 (HS-XXXC).

(3) OFF selection for agitators A-501, A-502 and A-503 (HS-XXXD).

(4) FIELD DISCONNECT status for agitators A-501, A-502 and A-503 (HS-XXXA).

(5) Motor starter status for agitators A-501, A-502 and A-503 (YY-XXX) at MCC PCS.

(6) HAND and AUTO selection indication for pumps P-504, P-505 and P-506 (HS-XXX).

(6) Power relay status for pumps P-506 (YY-XXX) at local PCS.

(7) Status of PIT-504.
(8) Status of PIT-505.

Scale to engineering units and store in memory:

(9) Sludge Transfer Pump discharge pressure PIT-504
(10) Sludge Recycle Pump discharge pressure PIT-505

c. Interlocks:

(1) Stop Equilization Tank T-300 discharge pump (P-310 or P-311) if: Polymer Drum level switch (LS-506) low.
(2) Stop Equilization Tank T-320 discharge pump (P-330) if: Polymer Drum level switch (LS-506) low.
(3) Stop Equilization Tank T-300 discharge pump (P-310 or P-311) if: Lamella Gravity Settling Zone level switch (LS-500) high.
(4) Stop Equilization Tank T-320 discharge pump (P-330) if: Lamella Gravity Settling Zone level switch (LS-500) high.

d. Alarms:

(1) Sludge Transfer Pump P-504 Discharge Pressure (PIT-504) high high.
(2) Sludge Transfer Pump P-504 Discharge Pressure (PIT-504) high.
(3) Sludge Transfer Pump P-504 Discharge Pressure (PIT-504) low low.
(4) Sludge Transfer Pump P-504 Discharge Pressure (PIT-504) low.
(5) Sludge Recycle Pump P-505 Discharge Pressure (PIT-505) high high.
(6) Sludge Recycle Pump P-505 Discharge Pressure (PIT-505) high.
(7) Sludge Recycle Pump P-505 Discharge Pressure (PIT-505) low low.
(8) Sludge Recycle Pump P-505 Discharge Pressure (PIT-505) low.
(9) Agitator A-501 motor starter (YY-501) tripped.
(10) Agitator A-502 motor starter (YY-502) tripped.
(11) Agitator A-503 motor starter (YY-503) tripped.
(12) Pump P-506 power relay (YY-506) tripped.
(13) Compressed air flow switch (FS-600) low.
(14) Sludge Transfer Pump P-504 Discharge Pressure Transmitter (PIT-504) status change.

(15) Sludge Recycle Pump P-505 Discharge Pressure Transmitter (PIT-505) status change.

4. Supervisory Control and Data Aquisition System Functions:
The Man-Machine Interface (MMI) function of the SCADA system shall display the following information:

(1) Process control parameters and mode.
(2) Mode and status Lamella Clarifier Agitators A-501, A-502, A-503, pumps P-504, P-505 and P-506.
(3) Digital values of parameters listed in paragraph 3b items 7 and 8.
(4) Display cummulative runtimes of Lamella Clarifier Agitator A-501, A-502, A-503, pumps P-504, P-505 and P-506.
(5) Display alarm indications as listed in paragraph 3d. Provide means for alarm acknowledgement.
(6) Provide operator interface to:
Activate ON-OFF function to Lamella Clarifier Agitators A-501, A-502 and A-503;
Activate ON-OFF function to Sludge Transfer Clarifier Pumps P-504;
Activate ON-OFF function to Sludge Recycle Pump P-505;
Activate ON-OFF function to Polymer Feed Pump P-506;
Change sludge recycle control parameters and mode;
Change sludge transfer control parameters and mode;
Reset runtime totalizer of Lamella Clarifier Agitators;
Reset runtime totalizer of Sludge Transfer and Recycle Pumps;
Reset runtime totalizer of each Sludge Pump;
(7) Provide real time trends of digital parameters listed in paragraph 3b items 7 and 8.
(8) Provide real time status of sludge recycle control output.
(9) Provide real time trend of sludge transfer control output.

All Unit Process parameters listed in paragraph 3b and alarms listed in paragraph 3d shall be made available over the communication link to the host computer and the WONDERWARE graphical process interface software.

H. Unit Process 5 - Air Stripping
(P&ID I6 and I7)

1. Overview

a. The Air Stripping Unit Process influent stream is delivered from the Dynasand Sand Filtration Unit by an 8" carbon steel

pipe to Lift Station #1. Process water is pumped either to the Air Stripper or to Lift Station #2 for direct processing in the Granulated Activated Carbon (GAC) Units. Sparging air is supplied by a stand-alone blower located inside Building 15. The Air Stripper operates at a maximum flow of 90 gpm measured at FIT-300 and FIT-310 and a constant influent organic concentration. Discharge from the Air Stripper sump is to Lift Station #2 where flow can be directed either to the GAC Unit for additional processing or to the pH Adjustment Tank for discharge to the local Publicly Owned Treatment Works (POTW).

b. The Air Stripping Unit Process consists of Lift Station #1 (T-610), Air Stripper Tower (ST-700), two self priming pumps (P-613 and P-614), one blower (B-710), one Organic Analyzer (AIT-611), one level transmitter (LT-610), one pressure indicating transmitter (PIT-613), one pressure differential indicating transmitter (PDIT-700), one level control valve (LCV-610), two flow valves (FV-700A and FV-700B), four pressure indicators (PI-613A, PI-613B, PI-614, PI-710), one level switch (LS-610), one flow switch (FS-710) and twelve hand switches (HS-613A, HS-613B, HS-613C, HS-613D, HS-614A, HS-614B, HS-614C, HS-614D, HS-710A, HS-710B, HS-710C and HS-710D).

c. The Air Stripper Feed Sump (Lift Station #1) level shall be maintained by modulating the position of level control valve LCV-610 based on lift station level as measured by level transmitter LT-610. Flow to the Air Stripper will be maintained at less than 90 gpm as measured by flow transmitters FIT-300 and FIT-320 (Equilization Tank T-300 and Equilization Tank T-320 effluent flows).

d. The concentration of the organic constituents in the Air Stripper feed shall be maintained by measuring the organic concentration of the influent stream at AIT-611. Any change in the organic concentration from the setpoint will result in an adjustment to the ratio of Equilization Tank effluent flows.

2. Analog Subsystems Functions:

a. Sensors/Transmitters:
Measure the following parameters and transmit a digital signal to the local PCS:

(1) Level of Lift Station #1 (LT-610).
(2) Discharge Pressure of Lift Station Pumps P-613 or P-614 (PIT-613).
(3) Position of Level Control Valve LCV-610 (ZT-610).

(4) Pressure Differential of Air Stripper Tower ST-700 (PDIT-700).

Measure the following parameters and transmit a linearly proportional analog signal to the local PCS:

(5) Concentration of organics in Air Stripper influent stream (AIT-611).

b. Control:

(1) Input HAND and AUTO selection for pump motor P-613 (HS-613B).
(2) Input ON selection for pump motor P-613 (HS-613C).
(3) Input OFF selection for pump motor P-613 (HS-613D).
(4) Input FIELD DISCONNECT status for pump motor P-613 (HS-613A).
(5) Input status of pump motor P-613 starter auxillary (YY-613) at Motor Control Center (MCC) PCS.
(6) Input HAND and AUTO selection for pump motor P-614 (HS-614B).
(7) Input ON selection for pump motor P-614 (HS-614C).
(8) Input OFF selection for pump motor P-614 (HS-614D).
(9) Input FIELD DISCONNECT status for pump motor P-614 (HS-614A).
(10) Input status of pump motor P-614 starter auxillary (YY-614) at Motor Control Center (MCC) PCS.
(11) Input HAND and AUTO selection for blower motor B-710 (HS-710B).
(12) Input ON selection for blower motor B-710 (HS-710C).
(13) Input OFF selection for blower motor B-710 (HS-710D).
(14) Input FIELD DISCONNECT status for blower motor B-710 (HS-710A).
(15) Input status of blower motor B-710 starter auxillary (YY-710) at Motor Control Center (MCC) PCS.
(16) Input status of Blower B-710 Flow Switch (FS-710).
(17) Input status of Lift Station #2 (T-610) Discharge Level Transmitter (LT-610).
(18) Input status of Lift Station #2 (T-610) Discharge Pressure Indicating Transmitter (PIT-613).
(19) Input status of Lift Station #2 (T-610) Level Control Valve (LCV-610).
(20) Input status of Air Strippper T-700 Pressure Differential Indicating Transmitter (PDIT-700).
(21) Input status of Air Stripper Flow Valve (FV-700A).
(22) Input status of Air Stripper Diverter Flow Valve (FV-700B).

3. Programmable Controller Subsystem Functions:

a. Control:

(1) If AUTO selected, provide ON-OFF function to Lift Station #1 (T-610) pump motor P-613.
(2) Totalize runtime in minutes for Lift Station #1 (T-610) pump motor P-613.
(3) Provide means to reset runtime totalizer if reset function selected.
(4) Provide failure indication output if Lift Station #1 (T-610) pump motor P-613 stops running when it is supposed to be in run state.
(5) If AUTO selected, provide ON-OFF function to Lift Station #1 (T-610) pump motor P-614.
(6) Totalize runtime in minutes for Lift Station #1 (T-610) pump motor P-614.
(7) Provide means to reset runtime totalizer if reset function selected.
(8) Provide failure indication output if Lift Station #1 (T-610) pump motor P-614 stops running when it is supposed to be in run state.
(9) Alternate operation of pumps P-613 and P-614 at a selected time interval or a default runtime interval of seven days.
(10) Provide feedback control of Lift Station #1 Tank T-610 level by transmitting a digital signal to LCV-610. Feedback control loop shall have two modes: MANUAL and AUTO. In AUTO, level shall be maintained by modulating LCV-610 until the level measured at LT-610 equals the setpoint. In MANUAL, LCV-610 may be manually modulated by varying the output digital signal until the desired level is acheived.
(11) Provide feedback control of Equilization Tanks T-300 and T-320 discharge pump ratio by transmitting a digital signal to LCV-300 and LCV-320. Feedback control loop shall have two modes: MANUAL and AUTO. In AUTO, discharge pump ratio shall be maintained by modulating LCV-300 and LCV-320 until the organic concentration measured at AIT-611 equals the setpoint. In MANUAL, LCV-300 and LCV-320 may be manually modulated by varying the output digital signal until the desired ratio is acheived.
(12) Provide output indication if LT-610 status changes.
(13) Provide output indication if PIT-613 status changes.
(14) Provide output indication if LCV-610 status changes.
(15) Provide output indication if PDIT-700 status changes.
(16) Provide output indication if FV-700A status changes.
(17) Provide output indication if FV-700B status changes.

b. Data Aquisition:
Monitor the following parameters:

(1) HAND and AUTO selection indication for pump P-613, P-614 and blower B-710. (HS-XXXB)
(2) ON selection for pumps P-613, P-614 and blower B-710 (HS-XXXC).
(3) OFF selection for pumps P-613, P-614 and blower B-710 (HS-XXXD).
(4) FIELD DISCONNECT status for pumps P-613, P-614 and blower B-710 (HS-XXXA).
(5) Motor starter status for pumps P-613, P-614 and blower B-710 (YY-XXX) at MCC PCS.
(6) Status of LT-610.
(7) Status of PIT-613.
(8) Status of LCV-610.
(9) Status of PDIT-700.
(10) Status of FV-700A.
(11) Status of FV-700B.

Scale to engineering units and store in memory:

(12) Lift Station #1 (T-610) Level, LT-610.
(13) Lift Station #1 (T-610) Pump P-613 or P-614 Discharge Pressure, PIT-613.
(14) Position of Level Control Valve, ZT-610.
(15) Air Stripper ST-700 Pressure Differential, PDIT-700.

c. Interlocks:

(1) Stop Lift Station #1 Pump P-613 or P-614 and Blower B-710 30 minutes later if: LT-610 low low.
(2) Stop Lift Station #1 Pump P-613 or P-614 and Blower B-710 30 minutes later if: AIT-611 high high.
(3) Stop Lift Station #1 Pump P-613 or P-614 and Blower B-710 30 minutes if: PDIT-700 high high.
(4) Stop Equilization Pumps P-300 and P-320 if: LT-610 high high.
(5) Stop Lift Station #1 Pump P-613 or P-614 and Blower B-710 if: FS-710 low.

d. Alarms:
(1) Lift Station #1 Level (LT-610) high high.
(2) Lift Station #1 Level (LT-610) high.
(3) Lift Station #1 Level (LT-610) low low.
(4) Lift Station #1 Level (LT-610) low.

(5) Lift Station #1 Pump P-613 or P-614 Discharge Pressure (PIT-613) high high.
(6) Lift Station #1 Pump P-613 or P-614 Discharge Pressure (PIT-613) high.
(7) Lift Station #1 Pump P-613 or P-614 Discharge Pressure (PIT-613) low low.
(8) Lift Station #1 Pump P-613 or P-614 Discharge Pressure (PIT-613) low.
(9) Organic Concentration Analyzer (AIT-611) high high.
(10) Organic Concentration Analyzer (AIT-611) high.
(11) Organic Concentration Analyzer (AIT-611) low low.
(12) Organic Concentration Analyzer (AIT-611) low.
(13) Air Stripper ST-700 Pressure Differential Pressure (PDIT-700) high high.
(14) Air Stripper ST-700 Pressure Differential Pressure (PDIT-700) high.
(15) Air Stripper ST-700 Pressure Differential Pressure (PDIT-700) low low.
(16) Air Stripper ST-700 Pressure Differential Pressure (PDIT-700) low.
(17) Pump P-613 motor starter (YY-613) tripped.
(18) Pump P-614 motor starter (YY-614) tripped.
(19) Blower B-710 motor starter (YY-710) tripped.
(20) Lift Station #1 (T-610) Level Transmitter (LT-610) status change.
(21) Lift Station #1 (T-610) Pump P-613 or P-614 dicharge Pressure Transmitter (PIT-613) status change.
(22) Lift Station #1 (T-610) Level Control Valve (LCV-610) status change.
(23) Air Stripper ST-700 Pressure Differential Transmitter (PDIT-700) status change.
(24) Air Stripper Flow Valve (FV-700A) status change.
(25) Air Stripper Diverter Flow Valve (FV-700B) status change.

4. Supervisory Control and Data Aquisition System Functions:
The Man-Machine Interface (MMI) function of the SCADA system shall display the following information:

(1) Process control loop parameters and mode.
(2) Mode and status of lift station #1 pumps P-613, P-614 and blower B-710.
(3) Digital values of parameters listed in paragraph 3b items 5 to 8.
(4) Display cummulative runtimes of lift station #1 pumps P-613, P-614 and blower B-710.
(5) Display alarm indications as listed in paragraph 3d and provide means for alarm acknowledgement.
(6) Provide operator interface to:
Activate ON-OFF function to pumps P-613, P-614 and blower B-710;

Change Lift Station #1 Level control loop parameters and mode;
Reset runtime totalizer of the pumps and blower;

(7) Provide real time trends of analog parameters listed in paragraph 3b items 5 to 8.

(8) Provide real time trend of level control loop output.

All Unit Process parameters listed in paragraph 3b and alarms listed in paragraph 3d shall be made available over the communication link to the host computer and the WONDERWARE graphical process interface software.

K. Unit Process 6 - Granulated Activated Carbon (GAC) System (P&IDs I7 and I10)

1. Overview

a. The GAC system consists of two units, piped as a pair, with carbon capacity of 20,000 pounds each. The GAC units are 10 feet in diameter by 18 feet total height and are capable of operating at pressures of 125 psig. Treated groundwater is pumped from the Lift Station #2 (T-715) to the GAC system through a 4" carbon steel pipe. Flow to the GAC unit may be diverted directly to the pH Adjustment Tank by means of a flow control valve. The effluent from the GAC system flows through a 4" carbon steel pipe to the Final pH Adjustment Tank.

b. The GAC System Unit Process shall consist of two Model 10 Granulated Activated Carbon Units (F-801 and F-802) lift station #2 (T-715), two self priming pumps (P-717 and P-718), thirteen flow valves (FV-800A, FV-800B, FV-800C, FV-800D, FV-800E, FV-801A, FV-801B, FV-801C, FV-801D, FV-802A, FV-802B, FV-802C and FV-802D), three pressure transmitters (PT-801A, PT-801B and PT-802), two pressure differential switches (PDS-801 and PDS-802), one level transmitter (LT-715), one level control valve (LCV-715), three pressure indicators (PI-717A, PI-717B and PI-718), one pressure indicating transmitter (PIT-717), one level switch (LS-715) and eight hand switches (HS-717A, HS-717B, HS-717C, HS-717D, HS-718A, HS-718B, HS-718C and HS-718D).

c. Treated Groundwater flow through GAC unit F-XXX (where XXX identifies the individual GAC unit) shall be acheived by opening flow valves FV-XXXB and FV-XXXC

d. At scheduled intervals, or when PDS-XXX is activated, the GAC units shall be backwashed at a flow of 560 gpm. Backwash shall be automatically controlled after initiation by operating personnel. The backwash cycle shall close FV-XXXB and FV-XXXC and open FV-XXXXA and FV-XXXXD of the GAC unit to be backwashed.

2. Analog Subsystems Functions:

a. Sensors/Transmitters:
Measure the following parameters and transmit a digital signal to the local PCS:

(1) Level of Lift Station #2 (LT-715).
(2) Discharge Pressure of Lift Station #2 Pump P-717 or P-718 (PIT-717).
(3) Position of Lift Station #2 (T-715) Level Control Valve (LCV-715).
(4) Inlet Pressure of GAC F-801 or F-802 (PT-801A).
(5) Outlet Pressure of GAC F-801 (PT-801B).
(6) Outlet Pressure of GAC F-802 (PT-802).
(7) Position of GAC System Flow Valve (FV-800B).
(8) Position of GAC System By-pass Flow Valve (FV-800A).
(9) Position of GAC System Backwash Waste Flow Valve (FV-800D).
(10) Position of GAC System Waste Flow Valve (FV-800E).
(11) Position of GAC System Bachwash Water Feed Flow Valve (FV-800C).
(12) Position of GAC F-801 Inlet Valve (FV-801B).
(13) Position of GAC F-801 Oultet Valve (FV-801C).
(14) Position of GAC F-801 Bachwash Inlet Valve (FV-801D).
(15) Position of GAC F-801 Bachwash Oultet Valve (FV-801A).
(16) Position of GAC F-802 Inlet Valve (FV-802B).
(17) Position of GAC F-802 Oultet Valve (FV-802C).
(18) Position of GAC F-802 Bachwash Inlet Valve (FV-802D).
(19) Position of GAC F-802 Bachwash Oultet Valve (FV-802A).

b. Control:

(1) Input HAND and AUTO selection for pump motor P-717 (HS-717B).
(2) Input ON selection for pump motor P-717 (HS-717C).
(3) Input OFF selection for pump motor P-717 (HS-717D).
(4) Input FIELD DISCONNECT status for pump motor P-717 (HS-717A).
(5) Input status of pump motor P-717 starter auxillary (YY-717) at Motor Control Center (MCC) PCS.

(6) Input HAND and AUTO selection for pump motor P-718 (HS-718B).
(7) Input ON selection for pump motor P-718 (HS-718C).
(8) Input OFF selection for pump motor P-718 (HS-718D).
(9) Input FIELD DISCONNECT status for pump motor P-718 (HS-718A).
(10) Input status of pump motor P-718 starter auxillary (YY-718) at Motor Control Center (MCC) PCS.
(11) Input status of Lift Station Level Transmitter (LT-715).
(12) Input status of Lift Station Level Control Valve (LCV-715).
(13) Input status of Lift Station Pump Discharge Pressure Transmitter (PIT-717).
(14) Input status of GAC F-801 or F-802 Inlet Pressure Transmitter (PT-801A).
(15) Input status of GAC F-801 Outlet Pressure Transmitter (PT-801B).
(16) Input status of GAC F-802 Outlet Pressure Transmitter (PT-802).
(17) Input status of Flow Valves FV-800A, FV-800B, FV-800C, FV-800D and FV-800E.
(18) Input status of Flow Valves FV-801A, FV-801B, FV-8012C and FV-801D.
(19) Input status of Flow Valves FV-802A, FV-802B, FV-8022C and FV-802D.

3. Programmable Controller Subsystem Functions:

a. Control:

(1) Provide feedback control of Lift Station #2 level by transmitting a digital signal to LCV-715. Feedback control loop shall have two modes: MANUAL and AUTO. In AUTO, valve position shall be adjusted until the level measured at LT-715 equals the setpoint. In MANUAL, valve position shall be adjusted by manually varying the loop output digital signal.
(2) Totalize runtime in minutes for individual GAC Units
(3) Provide means to reset each runtime totalizer if reset function selected.
(4) If AUTO selected, provide ON-OFF function to Lift Station #2 (T-610) pump motor P-717.
(5) Totalize runtime in minutes for Lift Station #2 (T-610) pump motor P-717.
(6) Provide means to reset runtime totalizer if reset function selected.
(7) Provide failure indication output if Lift Station #2 (T-610) pump motor P-717 stops running when it is supposed to be in run state.
(8) If AUTO selected, provide ON-OFF function to Lift Station

#2 (T-610) pump motor P-718.

(9) Totalize runtime in minutes for Lift Station #2 (T-610) pump motor P-718.

(10) Provide means to reset runtime totalizer if reset function selected.

(11) Provide failure indication output if Lift Station #2 (T-610) pump motor P-718 stops running when it is supposed to be in run state.

(12) Alternate operation of pumps P-717 and P-718 at a selected time interval or a default runtime interval of seven days.

(13) Provide control of GAC System Flow Valves as follows:

If feed to GAC units is desired, open FV-800B and FV-800E, close FV-800A, FV-800D and FV-800C.
If backwask is desired close FV-800B and FV-800E and open FV-800C and FV-800D.
If GAC Unit By-pass is desired close FV-800B and FV-800E and open FV-800A.

(14) Provide output indication if LT-715 status changes.

(15) Provide output indication if PIT-717 status changes.

(16) Provide output indication if LCV-715 status changes.

(17) Provide output indication if PT-801A status changes.

(18) Provide output indication if PT-801B status changes.

(19) Provide output indication if PT-802 status changes.

(20) Provide output indication if FV-800A, FV-800B, FV-800C, FV-800D, or FV-800E status changes.

(21) Provide output indication if FV-801A, FV-801B, FV-801C, or FV-801D status changes.

(22) Provide output indication if FV-802A, FV-802B, FV-802C, or FV-802D status changes.

b. Data Aquisition:
Monitor the following parameters:

(1) HAND and AUTO selection indication for pump P-717 and P-718. (HS-XXXB)

(2) ON selection for pumps P-717 and P-718 (HS-XXXC).

(3) OFF selection for pumps P-717 and P-718 (HS-XXXD).

(4) FIELD DISCONNECT status for pumps P-717 and P-718 (HS-XXXA).

(5) Motor starter status for pumps P-717 and P-718 (YY-XXX) at MCC PCS.

(6) Status of LT-715.

(7) Status of PIT-717.

(8) Status of LCV-715.

(9) Status of PT-801A.

(10) Status of PT-801B.
(11) Status of PT-802.
(12) Status of FV-800A, FV-800B, FV-800C, FV-800D and FV-800E.
(13) Status of FV-801A, FV-801B, FV-801C and FV-801D
(14) Status of FV-802A, FV-802B, FV-802C and FV-802D

Scale to engineering units and store in memory:

(15) Lift Station #2 (T-715) level (LT-715).
(16) Lift Station #2 (T-715) Pump P-717 or P-718 Discharge Pressure, PIT-717.
(17) Position of Level Control Valve, ZT-715.
(18) GAC System Inlet Pressure (PT-801A).
(19) GAC F-801 Outlet Pressure (PT-801B).
(20) GAC F-802 Outlet Pressure (PT-802).

c. Interlocks:

(1) When System is in operation FV-800A may be opened if: correct password has been entered.
(2) Stop Lift Station #2 Pump P-717 or P-718 if: GAC System inlet pressure PT-801A is high high.

d. Alarms:

(1) Lift Station #2 Level (LT-715) high high.
(2) Lift Station #2 Level (LT-715) high.
(3) Lift Station #2 Level (LT-715) low low.
(4) Lift Station #2 Level (LT-715) low.
(5) Lift Station #2 Pump P-715 or P-718 Discharge Pressure (PIT-613) high high.
(6) Lift Station #2 Pump P-715 or P-718 Discharge Pressure (PIT-613) high.
(7) Lift Station #2 Pump P-715 or P-718 Discharge Pressure (PIT-613) low low.
(8) Lift Station #2 Pump P-715 or P-718 Discharge Pressure (PIT-613) low.
(9) Pump P-717 motor starter (YY-717) tripped.
(10) Pump P-718 motor starter (YY-718) tripped.
(11) Lift Station #1 (T-715) Level Transmitter (LT-715) status change.
(12) Lift Station #1 (T-715) Pump P-717 or P-718 dicharge Pressure Transmitter (PIT-717) status change.
(13) Lift Station #1 (T-715) Level Control Valve (LCV-715) status change.
(14) GAC Inlet Pressure Transmitter (PT-801A) status change.
(15) GAC Unit F-801 outlet Pressure Transmitter (PT-801B)

status change.

(16) GAC Unit F-802 outlet Pressure Transmitter (PT-802) status change.

(17) GAC System Flow Valves FV-800A, FV-800B, FV-800C, FV-800D or FV-800E status change.

(18) GAC Unit F-801 Flow Valves FV-801A, FV-801B, FV-801C, or FV-801D status change.

(19) GAC Unit F-802 FV-802A, FV-802B, FV-802C, or FV-802D status change.

4. Supervisory Control and Data Aquisition System Functions:
The Man-Machine Interface (MMI) function of the SCADA system shall display the following information:

(1) Process control loop parameters and mode.

(2) Analog values of parameters listed in paragraph 3b items 15 to 20.

(3) Display cummulative runtimes of individual GAC Units

(4) Display alarm indications as listed in paragraph 3d.

(5) Provide means for alarm acknowledgement.

(6) Provide operator interface to:
Select individual GAC Units;
Select individual GAC Units for backwash;
Activate ON-OFF function to Lift Station #2 Pump P-717 or P-718;
Change Lift Station #2 level control loop parameters and mode;
Reset runtime totalizer of individual GAC Units;

(7) Provide real time trends of analog parameters listed in paragraph 3b items 15 to 20.

All Unit Process parameters listed in paragraph 3b and alarms listed in paragraph 3d shall be made available over the communication link to the host computer and the WONDERWARE graphical process interface software.

SECTION 13420

MISCELLANEOUS INSTRUMENTATION AND CONTROL DEVICES

PART 1 GENERAL

1.01 SECTION INCLUDES

A. Miscellaneous field mounted instrumentation and control devices not otherwise described in other sections of Division 13400.

1.02 RELATED SECTIONS

A. Section 13410 - General Instrumentation and Control Requirements.

1.03 REFERENCES

A. ANSI/NEMA 250-1985 Rev. 2 (5/88) - Enclosures for Electrical Equipment (1000 volts maximum).

B. ANSI 16.5-81 Pipe Flanges and Flanged Fittings.

1.04 SUBMITTALS

A. Provide submittals according to the requirements of Section 01300 except as specifically modified in this article. All submittals shall be shipped under separate cover to the owner.

1. Operation and maintenance manual (one per unit).

2. Certified drawings showing outline dimensions, mounting options and mounting accessories, if not included in Operation and Maintenance Manual.

3. Certificates of compliance.

4. Certified test reports.

5. Replacement parts and accessories listing, if not listed in Operation and Maintenance Manual.

6. Name, address, and telephone number of the nearest repair facility and/or information for obtaining on-site repair service.

1.05 QUALITY ASSURANCE

A. Manufacturer:

1. A firm regularly and currently engaged in design and manufacture of similar equipment.

2. Equipment shall be new and of current design.

B. Maintainability:

1. Designed for ease of maintenance and access to critical parts shall not require major disassembly.

2. Internal field adjustments to be easily accessible upon removal of a panel or cover.

3. Manufacturer or distributor shall be capable of repair or provide replacement maintenance within 24 hours or less response time.

C. Materials and Installation:

1. Comply with requirements of referenced electrical codes and standards.

2. Codes and standards referred to shall be used for establishing minimum quality of the materials and equipment supplied and installed.

3. Capacities of equipment not less than that indicated.

1.06 WARRANTY

A. Provide manufacturer's standard warranty on each component provided.

PART 2 PRODUCTS

2.01 PRESSURE GAUGES

A. General:

1.	Tag No.:	See Table "A"
2.	Service:	See Table "A"
4.	Mounting:	Stem-Mounting Type
2.	Pressure range:	See Table "A"
3.	Process fluid:	See Table "A"
4.	Protective Seal:	Gages shall be provided with chemical seals.

B. Construction:

1.	Pressure Element:	Bourdon tube or bellows type with 270 degrees clockwise pointer travel.
2.	Element Material:	Wetted parts shall be corrosion-resistant to the process fluid.
3.	Dial:	4 1/2 inches diameter, white face with black numbers.
4.	Case Material:	Black phenolic
5.	Connection Size:	Male 1/2 NPT with square wrench flats
6.	Movement Material:	Manufacturer's Standard
7.	Ring Style:	Manufacturer's Standard
8.	Blow-out Protection:	None
9.	Lens:	Manufacturer's Standard
10.	Nominal Accuracy:	± 0.5 percent of span
11.	Gage Liquid Fill:	Glycerin and Water

C. Chemical Seal:

1.	Material:	Wetted parts shall be corrosion-resistant to the process fluid. Diaphragm to be welded to the top housing.
2.	Fill Fluid:	Silicone
3.	Process Connection:	3/4" NPT female with a flushing connection.
4.	Gage Connection:	1/2" NPT female

D. Acceptable Manufacturers:

1. Gauges:
   a. Ametek
   b. Ashcroft
   c. U.S. Gauge

2. Diaphragm Seals:
   a. Ametek
   b. Ashcroft
   c. Mansfield and Green

2.02 FLOW INDICATOR, VARIABLE AREA

A. General:

1.	Tag No.:	See Table "B"
2.	Service:	See Table "B"
3.	Function:	Visual Indication
4.	Mounting:	Pipe Mount
5.	Connection Size:	See Table "B"
6.	Connection Type:	ANSI Class 150 Flange

B. Meter:

1.	Size:	To Be Determined
2.	Tube Material:	Manufacturer's Standard
3.	Meter Scale Length and Type:	Manufacturer's Standard

4. Meter Scale Range: To Be Determined
5. Rated Accuracy: Manufacturer's Standard

C. Fluid Data:
1. Fluid: See Table "B"
2. Color or Transparency: To Be Determined
3. Maximum Flow: See Table "B"
4. Normal Flow: See Table "B"
5. Minimum Flow: See Table "B"

6. Operating Specific Gravity: See Table "B"
7. Maximum Operating Viscosity: See Table "B"
8. Operating Pressure: See Table "B"
9. Operating Temperature: 70 deg F
10. Maximum Allowable Pressure Drop: To Be Determined

D. Service Conditions:
1. Ambient Temperature: +32 to +125 degrees Farenheit

E. Construction Materials:
1. Wetted parts shall be corrosion-resistant to the process fluid.

F. Acceptable Manufacturers:
1. Dwyer
2. Fisher & Porter

2.03 PRESSURE CONTROL VALVES

A. General:
1. Tag No.: See Table "C"
2. Service: See Table "C"
3. Application: Self-Actuated Pressure Relief for Pumping Well
4. Valve Size: See Table "C"
5. Port Size: See Table "C"
6. Valve Orientation: Vertical
7. Flange Face Finish: Standard ANSI Class 150 raised face flanges per ANSI B16.5

B. Construction Materials:
1. Body and Bonnet: Manufacturer's Standard
2. Seat and Disc: Manufacturer's Standard
3. Guide and Rings: Manufacturer's Standard

4. Spring: Manufacturer's Standard
5. Bellows: Manufacturer's Standard

C. Fluid Data:
1. Process Fluid: See Table "C"
2. Required Capacity: See Table "C"
3. Operating Pressure: See Table "C"
4. Set Pressure: Adjustable

D. Acceptable Manufacturers:
1. Fisher
2. Jordan Valve
3. Leslie Controls

2.04 PNEUMATIC PRESSURE REGULATING VALVES

A. General:
1. Tag No.: See Table "D"
2. Service: See Table "D"
3. Application: Regulation of Compressed Air Flow
4. Valve Size: See Table "D"
5. Line Size: See Table "D"
6. Port Size: See Table "D"
7. Regulator Type: Relieving

B. Construction Materials:
1. Body and Bonnet: Manufacturer's Standard
2. Seat: Manufacturer's Standard

C. Fluid Data:
1. Process Fluid: Compressed Air
2. Required Capacity: See Table "D"
3. Operating Pressure: 0 to 125 psig
4. Set Pressure: Variable

D. Accessories:
1. Supply Gage: See Table "D"
2. Filter: To Be Determined
3. Line Strainer: To Be Determined

E. Acceptable Manufacturers:
1. Fairchild
2. Norgren
3. Wilkerson

2.05 PNEUMATIC LINE LUBRICATORS

A. General:
1. Service: Lubrication for Air Operated Diaphragm Pumps
2. Reservoir Size: To Be Determined
3. Line Size: To Be Determined
4. Port Size: To Be Determined

B. Construction Materials:
1. Body: Manufacturer's Standard Metal Body
2. Reservoir: Transparent with Metal Guard

C. Fluid Data:
1. Process Fluid: Compressed Air with Lubricant Mist
2. Required Capacity: To Be Determined
3. Operating Pressure: 0 to 125 psig

D. Acceptable Manufacturers:
1. Fairchild
2. Norgren
3. Wilkerson

2.06 SOLENOID VALVE

A. General:
1. Tag Nos.: FY-504, FY-505, FY-901
2. Service: Supply of Lubricated Compressed air to Sludge Transfer Pump P-504, Sludge Recycle Pump P-505, and Sludge Discharge Pump P-901

B. Valve Body:
1. Type: 3-Way
2. When De-Energized: Normally Closed
3. Pipe Size: 3/8" NPT Female
4. Operating Differential Pressure Rating: 150 psi
5. Operation Direct/Pilot: Self Pilot

C. Solenoid:
1. Enclosure: NEMA 4
2. Voltage/Hz: 120 Volts AC, 60 Hz
3. Style of Coil: Class F Manufacturer's Standard
4. Duty: Continuous

D. Service Conditions:

1. Fluid: Lubricated Compressed Air
2. Maximum/Minimum Differential Pressures: 125 psi/25 psi
3. Operating Pressure: 25 to 125 psig
4. Ambient Temperature: +32 to +125 degrees Farenheit
5. Required Capacity: See Table "E"
6. Required Cv: 3 Minimum

E. Construction Materials:

1. Body: Manufacturer's Standard
2. Seat: Manufacturer's Standard
3. Diaphragm if Used: Manufacturer's Standard

F. Acceptable Manufacturers:

1. ASCO

2.07 LOW PRESSURE SWITCH

A. General:

1. Tag No.: PSL-910
2. Service: Low Pressure Alarm for Compressed Air Supply to Filter Press F-910
3. Type: Pressure
4. Setting: Adjustable - Set in Field
5. Dead Band: Adjustable
6. Adjustable Pressure Range: 0 to 100 psi

B. Sensing Element:

1. Type: Manufacturer's Standard
2. Material: Manufacturer's Standard
3. Connection Size: Manufacturer's Standard
4. Connection Location: Bottom Mount to Pipe

C. Switch:

1. Type: Manufacturer's Standard
2. Quantity in Housing: Two SPDT Switches
3. Rating: 15 Amps, 120 Volts AC, 60 Hz
4. Load: Resistive
5. Enclosure: NEMA 4
6. Conduit Connection: Manufacturer's Standard

D. Service Conditions:
1. Fluid: Compressed Air
2. Ambient Temperature: +32 to +125 degrees Farenheit

E. Acceptable Manufacturers:
1. Dwyer Instruments Inc.
2. Solon Manufacturing Co.

2.08 DIFFERENTIAL PRESSURE SWITCH

A. General:
1. Tag Nos.: PDS-801, PDS-802
2. Service: Differential Pressure Switches for Activated Carbon Filters F-801 and F-802
3. Type: Pressure
4. Setting: Adjustable - Set in Field
5. Dead Band: Adjustable
6. Adjustable Differential Pressure Range: 0 to 25 psid

B. Element:
1. Type: Manufacturer's Standard
2. Material: Manufacturer's Standard
3. Connection Size: Manufacturer's Standard
4. Connection Location: Bottom Mount to Pipe

C. Switch:
1. Type: Manufacturer's Standard
2. Quantity in Housing: Two SPDT Switches
3. Rating: 15 Amps, 120 Volts AC, 60 Hz
4. Load: Resistive
5. Enclosure: NEMA 4
6. Conduit Connection: Manufacturer's Standard

D. Service Conditions:
1. Fluid: Groundwater
2. Ambient Temperature: +32 to +125 degrees Farenheit

E. Construction Materials:
1. Wetted parts shall be corrosion-resistant to the process fluid.

F. Acceptable Manufacturers:
1. Dwyer Instruments Inc.
2. Solon Manufacturing Co.

2.09 FLOW SWITCH

A. General:

1. Tag Nos.:	FS-405, FS-600, FS-710
2. Service:	Air Flow Switches for Air Oxidation Blower B-405, Air Stripper Blower B-710 and Sand Filter F-600 Air Sparge
3. Type:	Vane Operated

B. Vane:

1. Type:	Manufacturer's Standard
2. Material:	Manufacturer's Standard

C. Switch:

1. Type:	Manufacturer's Standard
2. Switch Body:	Manufacturer's Standard
3. Contact Rating:	5 Amps, 125/250 Volts AC, 60 Hz
4. Load:	5 Amps Resistive, 3 Amps inductive
5. Conduit Connection:	Manufacturer's Standard

D. Service Conditions:

1. Fluid:	Blower Air
2. Ambient Temperature:	+32 to +125 degrees Farenheit
3. Flow Rate:	To Be Determined

E. Acceptable Manufacturers:

1. W.E. Anderson

2.11 TEMPERATURE TRANSMITTER

A. General:

1. Tag Nos.:	TT-1, TT-2, TT-3, TT-4, TT-110, TT-120
2. Service:	Control Panel Temperature
3. Function:	Convert RTD temperature input in linear proportion, to a 4 to 20 mA dc output signal capable of transmission into at least a 600 ohm load at 24 Vdc. Signal and power transmission provided on a single pair of wires.
4. Housing:	Manufacturer's Standard for Wall Mounting
5. Mounting:	Wall Mount Unit to include RTD
6. Enclosure Class:	Manufacturer's Standard
7. Power Supply:	24 Volts DC
8. Operating ambient temperature limits:	+32 to +122 degrees Farenheit
9. Range:	+20 to +120 degrees Farenheit
10. Output Span:	Field adjustable for 4-20ma
11. Accuracy:	Plus or minus 0.5 percent of calibrated span or better.

12. Stability: 0.01%/degree Centigrade Zero Drift or Better
0.01%/degree Centigrade Span Drift or Better

B. Sensing Element:
1. Sensing Element: 2-wire platinum RTD capable of measuring temperature from +20 to +122 degrees Farenheit

C. Acceptable Manufacturers:
1. Action Instruments Type RTD Wall Mount, Part No. #E421-0036

2.12 RELAYS-ELECTROMAGNETIC

A. General Purpose Relays:
1. General purpose industrial type relays shall be used to interface between the prgrammable logic controller panel and external devices with separate voltage sources. They shall have a coil rated for 120 Volys AC, a Single-Pole-Double-Throw contact rated for 10 amperes at 120 Volts AC and be equipped with a light emitting diode indicator lamp. They shall be enclosed in a transparent plastic dust cover and be mounted on a socket assembly. The socket assembly shall be capable of holding up to four relays and have compression clamp connectors for input and output wire connections. The socket assembly shall also be mountable on DIN type mounting rail.

2. Acceptable Manufacturers:
a. Entrelec Type RM 421A, Part No. 020 060.06

PART 3 EXECUTION

3.01 INSTALLATION

A. Install, calibrate, and start up field mounted elements in strict compliance with the manufacturer's requirements and recommendations. Present conflicts between manufacturer's requirements and recommendations and these specifications or Drawings to Engineer for resolution before affected work is started.

B. Connections of instruments to process piping shall include, as close as practical to the point of connection, a tight closing block valve suitable for the maximum process pressure and temperature and for the material involved.

C. Protect and isolate instruments from vibration, temperature extremes, radiant heat, rain or falling water, and similar adverse conditions unless specifically intended for such service.

D. Impulse lines of pressure or pressure differential instruments shall be as short as practical and installed with a minimum slope of l-inch per foot (1:12) downward toward the instrument in liquid system and upward toward the instrument in gaseous systems. If this preferred direction of slope cannot be maintained, submit for approval an installation configuration utilizing traps, drains, and/or vents at high and low points which will ensure freedom from mixed phase offset effects and provide ease of purging or draining.

E. Mark field mounted elements with data required for calibration such as location of adjustments, span, offset, zero suppression, and test voltages. If such data are not provided in permanent markings or on the manufacturer's nameplate, affix a durable tag or label in a protected location which will become readily visible in the normal course of servicing the instrument.

F. Before installing, carefully clean valves of all foreign material, and inspect valves in OPEN and CLOSED positions. Install valves in accordance with these Specifications and in accordance with the manufacturer's written instructions.

G. Insofar as practical, the valve assemblies shall be completely factory assembled and shipped as a unit. The parts and assemblies that are, of necessity, shipped unassembled shall be packaged and tagged in a manner that will protect the equipment from damage and facilitate the final identification and assembly in the field.

3.02 EQUIPMENT TESTING AND CALIBRATION

A. Factory Tests and Calibration:

1. Factory-test field mounted elements by the manufacturer to assure satisfactory performance prior to shipment. Whenever possible, include calibration to actual range and conditions of use. Calibration shall be traceable to the National Institute of Standards and Technology (NIST) with an uncertainty not more than 1/2 of specified or claimed accuracy of instruments.

B. Field Tests and Calibration:

1. Calibrate field mounted elements which were not calibrated to final working values of range, span, and zero suppression at the factory prior to or at the time of installation. This calibration shall meet the same requirements of accuracy and traceability required for factory testing above. The Engineer shall be given 48 hours notice and the opportunity to witness this calibration.

END OF SECTION

Attachment A - Table "A", 2 pages
Attachment B - Table "B", 1 page
Attachment C - Table "C", 1 page
Attachment D - Table "D", 1 page

TABLE "A"
Pressure Gauges

Tag No.	Service	Process Fluid	Gauge Dial Range
PI 110	Outlet Pressure Indicator for Well PW-110	Ground Water	0 - 100 psig
PI 120	Line Pressure Indicator for Well PW-120	Ground Water	0 - 100 psig
PI 300	Outlet Pressure Indicator for Equalization Tank #1	Ground Water	0 - 30 psig
PI 310A	Inlet Pressure Indicator for Lines to Pumps P-310 or P-311	Ground Water	0 - 30 psig
PI 310B	Pump Outlet Pressure Indicator for Pump P-310	Ground Water	0 - 60 psig
PI 311	Pump Outlet Pressure Indicator for Pump P-311	Ground Water	0 - 60 psig
PI 402	Pump Outlet Pressure Indicator with Silicone Filled Diaphragm Seal for Pump P-402	Hydrogen Peroxide	0 - 60 psig
PI 403	Pump Outlet Pressure Indicator for Pump P-403	Sodium Hydroxide	0 - 60 psig
PI 404	Pump Outlet Pressure Indicator for Pump P-404	Sodium Hydroxide	0 - 60 psig
PI 506	Pump Outlet Pressure Indicator for Pump P-506	Polymer	0 - 60 psig
PI 613A	Inlet Pressure Indicator for Lines to Pumps P-613 or P-614	Ground Water	0 - 15 psig
PI 613B	Pump Outlet Pressure Indicator for Pump P-613	Ground Water	0 - 100 psig
PI 614	Pump Outlet Pressure Indicator for Pump P-614	Ground Water	0 - 100 psig
PI 710	Blower Outlet Pressure Indicator for Blower B-710	Air	TBD
PI 717A	Inlet Pressure Indicator for Lines to Pumps P-717 or P-718	Ground Water	0 - 15 psig
PI 717B	Outlet Pressure Indicator for Pump P-717	Ground Water	0 - 30 psig
PI 718	Pump Outlet Pressure Indicator for Pump P-718	Ground Water	0 - 30 psig

TABLE "A"
Pressure Gauges
Groundwater Extraction System

Tag No.	Service	Process Fluid	Gauge Dial Range
PI 922A	Inlet Pressure Indicator with Silicone Filled Diaphragm Seal at Lines for Pumps P-922 or P-922B	Ground Water	TBD
PI 922B	Outlet Pressure Indicator with Silicone Filled Diaphragm Seal for Pump P-922	Ground Water	TBD
PI 923	Outlet Pressure Indicator with Silicone Filled Diaphragm Seal for Pump P-923	Ground Water	TBD

TABLE "B"
Flow Indicators, Variable Area

Tag No.	Service	Process Fluid	Maximum, Nominal, Minimum, Flow	Connection Size	Operating Specific Gravity	Maximum Operating Viscosity, Centistokes	Operating Pressure	Color or Transparency
FI 402	Visual Flow Indicator for Hydrogen Peroxide Pump P-402	Hydrogen Peroxide 35% by Weight	1.0 GPH	1"	TBD	TBD	11 psig Minimum	Transparent
FI 403	Visual Flow Indicator for Sodium Hydroxide Pump P-404A	Sodium Hydroxide 25% Liquid	1.5 GPH	1"	1.27	TBD	11 psig Minimum	Transparent
FI 404	Visual Flow Indicator for Sodium Hydroxide Pump P-402B	Sodium Hydroxide 25% Liquid	1.5 GPH	1"	1.27	TBD	11 psig Minimum	Transparent
FI 506	Visual Flow Indicator for Polymer Pump P-506	Polymer	TBD	1"	TBD	TBD	75 psig Maximum	White
FI 812	Visual Flow Indicator for Sulfuric Acid Pump P-812	Sulfuric Acid 10% by Weight	1.0 GPH	1"	1.83	14.6	5 psig Minimum	Transparent

TABLE "C"
Pressure Control Valves

Tag No.	Service	Valve Body Type	Valve Size	Process Fluid	Required Capacity, gpm	Operating Pressure, psig	Set Pressure, psig
PCV 110	Pressure Relief for Pumping Well PW-110	Flange ANSI 150	2"	Ground Water	50	71	75
PCV 120	Pressure Relief for Pumping Well PW-120	Flange ANSI 150	2"	Ground Water	15	78	80

TABLE "D"
Pneumatic Pressure Regulating Valves

Tag No.	Service	Pressure Regulator Port Size, NPT female	End Connection	Minimum Required Capacity, scfm	Air Gage Pressure Range, psig
PRV 504	Pressure Regulating Valve Controlling Compressed Air to Sludge Transfer Pump P-504	TBD	3/8" NPT Female	80	5 to 125 psig
PRV 505	Pressure Regulating Valve Controlling Compressed Air to Sludge Recycle Pump P-505	TBD	3/8" NPT Female	80	5 to 125 psig
PCV 600	Pressure Regulating Valve Controlling Compressed Air to Sand Filter F-600 Air Sparge	TBD	3/8" NPT Female	80	5 to 125 psig
PRV 901	Pressure Regulating Valve Controlling Compressed Air to Sludge Discharge Pump P-901	TBD	3/8" NPT Female	80	5 to 125 psig

SECTION
13422

PRESSURE TRANSMITTER

PART 1 GENERAL

1.01 SUMMARY

A. Section Includes:
1. Field mounted elements of a electronic pressure transmitter and auxiliary equipment as described herein.

1.02 REFERENCES

A. The codes and standards generally applicable to the work of this section are listed herein.
ANSI/NEMA - 1985 Rev. 2 (5/88) - Enclosures for Electrical Equipment (1000 volts maximum)

1.03 SUBMITTALS

A. Provide submittals according to the requirements of Section 01300 except as specifically modified in this article. All submittals shall be shipped under separate cover to the owner.
1. Operation and maintenance manual (one per unit).
2. Certified drawings showing outline dimensions, mounting options and mounting accessories, if not included in Operation and Maintenance Manual.
3. Certificates of compliance.
4. Certified test reports.
5. Replacement parts and accessories listing, if not listed in Operation and Maintenance Manual.
6. Name, address, and telephone number of the nearest repair facility and/or information for obtaining on-site repair service.

1.04 QUALITY ASSURANCE

A. Manufacturer:
1. A firm regularly and currently engaged in design and manufacture of similar equipment.
2. Equipment shall be new and of current design.

B. Maintainability:
1. Designed for ease of maintenance and access to critical parts shall not require major disassembly.
2. Internal field adjustments to be easily accessible upon removal of a panel or cover.
3. Manufacturer or distributor shall be capable of repair or provide replacement maintenance within 24 hours or less response time.

C. Materials and Installation:
1. Comply with requirements of referenced electrical codes and standards.
2. Codes and standards referred to shall be used for establishing minimum quality of the materials and equipment supplied and installed.
3. Capacities of equipment: not less than that indicated.

1.05 WARRANTY

A. Provide manufacturer's standard warranty.

PART 2 PRODUCTS

2.01 EQUIPMENT

A. General:

1. Tag No.:	See Table "A" (Attachment)
2. Function:	Convert liquid pressure measurement, in linear proportion, to a 4 to 20 mA dc output signal capable of transmission into at least a 600 ohm load at 24V dc.
3. Power Supply:	24 Volts DC
4. Ambient Temp. Limits:	Minus 20 to plus 185 degrees F
5. Humidity Limits:	0-100 percent relative humidity

B. Transmitter: Gage Type

1. Output:	4-20 mA; Signal and power transmission provided on a single pair of wires; Digital process variable superimposed on 4-20 mA signal available to any host that conforms to the HART protocol for interrogation and diagnostics without interruption of the transmitter's output signal
2. Local Indication:	None
3. Range:	300 psi
4. Minimum Span:	(Upper Range Limit)/10 See Table "A"
5. Overpressure Limit:	0 psia to 2,000 psig without damage to the transmitter
6. Reference Accuracy:	±0.1% of span for spans from 1:1 to 6:1 of Upper Range Limit. Between 6:1 and 10:1 of Upper Range Limit, accuracy = 0.15 % of span or better.
7. Stability:	±0.1% of Upper Range Limit for six months
8. Ambient Temp. Effect:	At maximum span, zero error not to exceed ±0.25% of span per 100 deg F. The total effect including span and zero errors not to exceed ±0.5%

9. Damping: Analog output response user-selectable from 0 to 30 seconds minimum.

10. Failure Mode Alarm: High (>20 mA) output

11. Configuration Memory: Non-volatile EEPROM memory to retain configuration, characterization, and digital trim data in event of power interruption

12. Fill Fluid: Silicone

13. Housing: NEMA 4

14. Enclosure Class: None-Hazardous

C. Construction:
All wetted parts to be 316 SST
1. Process Connection: 1/2-inch NPT 316L SST
2. Element Mat'l and Type: 316 SST Diaphragm

D. Process:
1. Process Fluid: See Table "A"

E. Accessories:
1. Provide mounting bracket for mounting to 2 inch pipe.
2. Provide transmitter with 316 SST drain/vent valves.

2.02 Acceptable Manufacturers:

A. Fisher & Porter
B. Rosemount

PART 3 EXECUTION

3.01 EQUIPMENT TESTING AND CALIBRATION

A. Factory Tests and Calibration:
1. Factory-test pressure transmitter elements by the manufacturer to assure satisfactory performance prior to shipment. Calibration shall be traceable to the National Institute of Standards and Technology (NIST) with an uncertainty not more than 1/2 of specified or claimed accuracy of instruments.

END OF SECTION

(Attachment - Table "A", 1 page)

TABLE "A"

Groundwater Extraction System

Tag No.	Service	Process Fluid	4ma to 20ma Span
PIT 110	Inlet Pressure Data for FCV 110	Ground Water	0 - 100 psig
PIT 120	Inlet Pressure Data for FCV 120	Ground Water	0 - 100 psig
PIT 310	Inlet Pressure Data for FCV 310	Ground Water	0 - 75 psig
PIT 502	Outlet Pressure Data for Sludge Recycle Pump P-502	Sludge	0 - 150 psig
PIT 504	Outlet Pressure Data for Sludge Transfer Pump P-504	Sludge	0 - 150 psig
PIT 613	Discharge Line Pressure Data for Pumps P-613/P-614	Ground Water	0 - 100 psig
PIT 717	Discharge Line Pressure Data for Pumps P-717/P-718	Ground Water	0 - 50 psig
PIT 812	Discharge Line Pressure Data for Pump P-812	Sulfuric Acid	0 - 75 psig
PIT 901	Outlet Pressure Data for Sludge Discharge Pump P-901	Sludge	0 - 100 psig
PIT 910	Feed Pressure Data for Filter Press	Sludge	0 - 100 psig
PIT 922	Outlet Pressure Data for Pump P-922	Ground Water	0 - 150 psig

SECTION
13427

LEVEL TRANSMITTER - CONTINUOUS LEVEL SENSOR ELEMENT

PART 1 GENERAL

1.01 SUMMARY

A. Section Includes:
1. Provide field mounted elements of an electronic liquid level transmitter based on admittance measurement technique and auxiliary equipment as described herein.

1.02 REFERENCES

A. The codes and standards generally applicable to the work of this section are listed herein.
ANSI/NEMA - 1985 Rev. 2 (5/88) - Enclosures for Electrical Equipment (1000 volts maximum)
ANSI - ANSI 16.5-81 Pipe Flanges and Flanged Fittings

1.03 SUBMITTALS

A. Provide submittals according to the requirements of Section 01300 except as specifically modified in this article. All submittals shall be shipped under separate cover to the owner.
1. Operation and maintenance manual (one per unit).
2. Certified drawings showing outline dimensions, mounting options and mounting accessories, if not included in Operation and Maintenance Manual.
3. Certificates of compliance.
4. Certified test reports.
5. Replacement parts and accessories listing, if not included in Operation and Maintenance Manual.
6. Name, address, and telephone number of the nearest repair facility and/or information for obtaining on-site repair service.
7. Any characteristic, material, or specification listed as "Standard" will be listed by vendor at time of quotation.

1.04 QUALITY ASSURANCE

A. Manufacturer:
1. A firm regularly and currently engaged in design and manufacture of similar equipment.
2. Equipment shall be new and of current design.

B. Maintainability:
1. Designed for ease of maintenance and access to critical parts shall not require major disassembly.
2. Internal field adjustments to be easily accessible upon removal of a panel or cover.

3. Manufacturer or distributor shall be capable of repair or provide replacement maintenance within 24 hours or less response time.

C. Materials and Installation:
1. Comply with requirements of referenced electrical codes and standards.
2. Codes and standards referred to shall be used for establishing minimum quality of the materials and equipment supplied and installed.
3. Capacities of equipment: not less than that indicated.

1.05 WARRANTY

A. Provide manufacturer's standard warranty.

PART 2 PRODUCTS

2.01 EQUIPMENT

A. General:
1. Tag No.: See Table "A" (Attachment A)
2. Function: Convert liquid level based on admittance measurement, in linear proportion, to a 4 to 20 mA dc output signal capable of transmission into at least a 600 ohm load at 24V dc.
3. Power Supply: 120 VAC plus or minus 10 percent, 50/60 Hz, single-phase.
4. Operating temperature limits: Minus 40 to plus 140 degrees F.

B. Sensor Element:
1. Material: Wetted parts Type 304 stainless steel
2. Insulation and Seals: Manufacturer's Standard
3. Sensor element insertion length: See Tables "A" and "B" and Figure 1
4. Connection: See Table "A" Notes

C. Transmitter:
1. Output: 4-20 ma; Signal and power transmission provided on a single pair of wires; Digital process variable superimposed on 4-20 ma signal available to any host that conforms to the HART protocol for interrogation and diagnostics without interruption of the transmitter's output signal.
2. Local Indication: Yes, Manufacturer's Standard
3. Range: See Table "A"
4. Accuracy: Plus or minus 1 percent of full range.

6. Stability: Plus or minus 0.008 percent per degree F. Plus or minus 0.25 percent per 20 volts supply voltage.
7. Response Time: 20 milliseconds minimum
8. Level Control
   Adjustment: 0 to 100 percent full scale with zero adjustment of 0 to 5 percent of full scale.
9. Damping: Adjustable output damping of 0 to 10 seconds minimum.
10. Failure Mode
    Alarm: High (>20 ma) output
11. Configuration
    Memory: Non-volatile EEPROM memory to retain configuration, characterization, and digital trim data in event of power interruption.
12. Housing: NEMA 4
13. Enclosure Class: Non-Hazardous
14. Location: Remotely located from sensor element.

D. Service Conditions:
1. Process Fluid: Ground water
2. Maximum Process
   Pressure: See Table "A"
3. Agitation: See Table "A"
4. Well Casing
   and Vessel Material: See Table "A"

E. Accessories:
1. Sensor remote connection cable length: See Table "A"

F. ACCEPTABLE MANUFACTURERS:
A. Drexelbrook
B. Fisher & Porter
C. Great Lakes Instruments

PART 3 EXECUTION

3.01 EQUIPMENT TESTING AND CALIBRATION

A. Factory Tests and Calibration:
1. Factory-test level transmitter elements by the manufacturer to assure satisfactory performance prior to shipment. Calibration shall be traceable to the National Institute of Standards and Technology (NIST) with an uncertainty not more than 1/2 of specified or claimed accuracy of instruments.

END OF SECTION

Attachment A - Table "A", 3 pages
Attachment B - Table "B", 3 pages
Attachment C - Figure 1, 1 page

TABLE "A"
Ground Water Extraction System

Extracted Ground Water Level Control

Tag No.	Service	Sensor Element Type and Insertion Length, feet	Depth Range, inches	Transmitter Output, 4 ma to 20 ma Span	Maximum Process Pressure, psig	Agitation, horsepower	Well Casing Material	Remote Sensor Cable Length, feet
LT-110A	Water Level in Pumping Well PW-110 (37.0' depth)	10.0 Flexible Sensor Cable w/Ground	120	0" to 84"	10	3 Hp	Stainless Steel	50'
LT-110B	Water Level in Monitoring Well MW-110 (18.09' depth)	11.0 Flexible Sensor Cable w/Ground	132	0" to 84"	10	No	PVC	50'
LT-110C	Water Level in Stream Well SW-110 (37.6' depth)	14.0 Flexible Sensor Cable w/Ground	168	0" to 96"	10	No	Stainless Steel	50'
LT-120A	Water Level in Pumping Well PW-120 (47.0' depth)	9.0 Flexible Sensor Cable w/Ground	108	0" to 84"	10	.75 Hp	Stainless Steel	50'
LT-120B	Water Level in Monitoring Well MW-120 (17.7' depth)	12.0 Flexible Sensor Cable w/Ground	144	0" to 84"	10	No	PVC	50'
LT-120C	Water Level in Stream Well SW-120 (29.5' depth)	14.0 Flexible Sensor Cable w/Ground	168	0" to 108"	10	No	Stainless Steel	50'
LT-130B	Water Level in Monitoring Well MW-130 (12.75' depth)	11.0 Flexible Sensor Cable w/Ground	132	0" to 84"	10	No	Carbon Steel	50'
LT-130C	Water Level in Stream Well SW-130 (37.0' depth)	14.0 Flexible Sensor Cable w/Ground	168	0" to 96"	10	No	Stainless Steel	50'

TABLE "A"
Ground Water Extraction System

Extracted Ground Water Level Control

Tag No.	Service	Sensor Element Type and Insertion Length, feet	Depth Range, inches	Transmitter Output, 4 ma to 20 ma Span	Maximum Process Pressure, psig	Agitation, horsepower	Vessel Material	Remote Sensor Cable Length, feet
LT-300	Water Level in Equalization Tank #1 (21' depth)	20.5' Flexible Sensor Cable w/Ground	246	0" to 180"	10	TBD	Carbon Steel	50'
LT-320	Water Level in Equalization Tank #2 (16' depth)	15.5' Flexible Sensor Cable w/Ground	186	0" to 120"	10	TBD	Carbon Steel	50'
LT-400	Water Level in Air Oxidation Tank (6.5' depth)	6.0' Flanged Rigid Probe w/Ground	72"	0" to 60"	10	TBD	Steel	50'
LT-410	Water Level in Deaeration/Ph Adjustment Tank (6.5' depth)	6.0' Flanged Rigid Probe w/Ground	72"	0" to 57"	10	TBD	Steel	50'
LT-610	Water Level in Lift Station #1 (9.5' depth)	9.0' Flanged Rigid Probe w/Ground	96	0" to 84"	10	No	Steel	50'
LT-715	Water Level in Lift Station #2 (5.5' depth)	5.0' Flanged Rigid Probe w/Ground	60	0" to 48"	10	No	Steel	50'

TABLE "A"
Ground Water Extraction System

Extracted Ground Water Level Control

Tag No.	Service	Sensor Element Type and Insertion Length, feet	Depth Range, inches	Transmitter Output, 4 ma to 20 ma Span	Maximum Process Pressure, psig	Agitation, horsepower	Vessel Material	Remote Sensor Cable Length, feet
LT-920	Water Level in Lift Station #3 (6.5' depth)	6.0' Flanged Rigid Probe w/Ground	72	0" to 60"	10	TBD	Steel	50'
LT-810	Water Level in Final Ph Adjustment Tank (9.5' depth)	9.0' Flanged Rigid Probe w/Ground	96	0" to 84"	10	TBD	Steel	50'

Note:
1. Sensors to have cable\probe interface enclosure.
2. Flexible sensor cable to have the standard end weight.
3. Sensors to have 4" ANSI 150# mounting flange.
4. See Table "B" and Figure 1 for detailed dimensional information.
5. Level sensors are mounted in vertical axis.

TABLE "B"
Ground Water Extraction System

Continuous Level Sensor Dimensional Information

Tag No.	Well Description	Dimension "A"	Dimension "B"	Dimension "C"	Dimension "D"	Dimension "E"	Dimension "F"
LT-110A	Water Level in Pumping Well PW-110	37.00'	16.45'	2"	35.73'	28.73'	27.00'
LT-110B	Water Level in Monitoring Well MW-110	18.10'	15.69'	1"	15.55'	8.55'	7.09'
LT-110C	Water Level in Stream Well SW-110	37.70'	16.66'	1"	32.80'	24.80'	23.60'
LT-120A	Water Level in Pumping Well PW-120	47.00'	16.29'	2"	46.86'	39.86'	38.00'
LT-120B	Water Level in Monitoring Well MW-120	17.70'	15.32'	1"	14.78'	7.78'	5.70
LT-120C	Water Level in Stream Well SW-120	29.50'	16.27'	1"	25.94'	16.94'	15.50'
LT-130B	Water Level in Monitoring Well MW-130	12.75'	16.48'	1/2"	9.04'	2.04'	0.75'
LT-130C	Water Level in Stream Well SW-130	37.00'	16.70'	1"	32.24'	24.24'	23.00'

TABLE "B"
Ground Water Extraction System

Continuous Level Sensor Dimensional Information

Tag No.	Tank Description	Dimension "A"	Dimension "B"	Dimension "C"	Dimension "D"	Dimension "E"	Dimension "F"
LT-300	Water Level in Equalization Tank #1	21.00'	0.50'	1.00'	19.00'	4.00'	0.50'
LT-320	Water Level in Equalization Tank #2	16.00'	0.50'	1.00'	14.00'	4.00'	0.50'
LT-400	Water Level in Air Oxidation Tank	6.50'	0.50'	1.00'	5.50'	0.50'	0.50'
LT-410	Water Level in Deaeration/Ph Adjustment	6.50'	0.50'	1.00'	5.25'	0.50'	0.50'
LT-610	Water Level in Lift Station #1	9.50'	0.50'	1.00'	8.00'	1.00'	0.50'
LT-715	Water Level in Lift Station #2	5.5'	0.50'	0.50'	4.50'	0.50'	0.50'

TABLE "B"
Ground Water Extraction System

Continuous Level Sensor Dimensional Information

Tag No.	Tank Description	Dimension "A"	Dimension "B"	Dimension "C"	Dimension "D"	Dimension "E"	Dimension "F"
LT-920	Water Level in Lift Station #3	6.5′	0.50′	0.50′	5.50′	0.50′	0.50′
LT-810	Water Level in Final Ph Adjustment Tank	9.5′	0.50′	0.67′	8.00′	1.00′	0.50′

Note:
1. Refer to Figure 1 for illustrations of well and tank dimension locations.

CONTINUOUS LEVEL SENSOR
WELL AND TANK DIMENSIONS

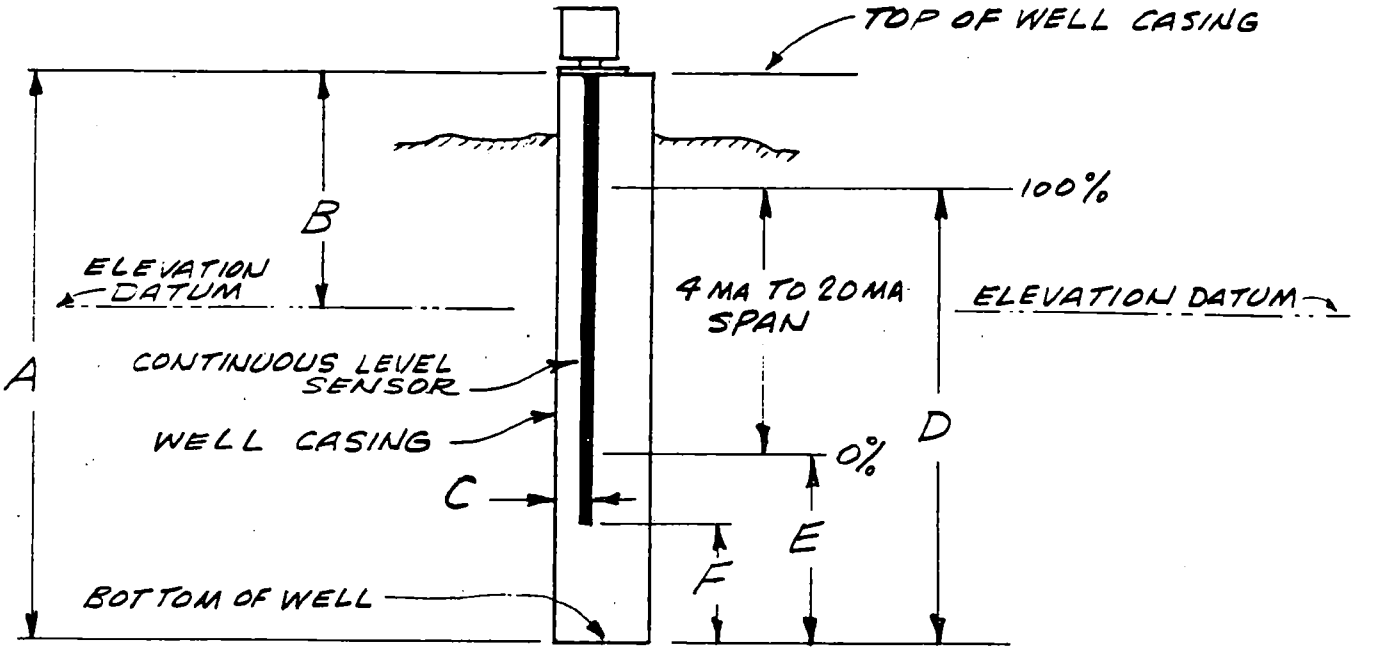

WELL DIMENSIONS

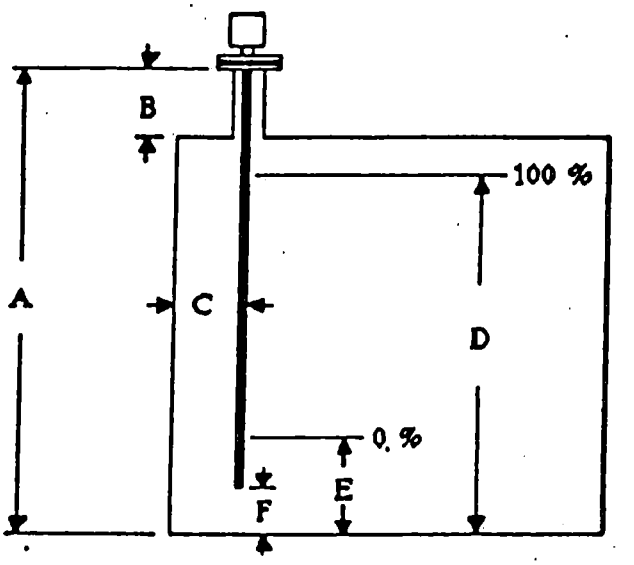

FIGURE 1

TANK DIMENSIONS

CIBA
SPECS\CRANSTON\13427.00
MAY 20, 1994

LEVEL TRANSMITTER-
CONTINUOUS LEVEL SENSOR ELEMENT
13427-C1

SECTION
13428

SINGLE POINT LEVEL SWITCH

PART 1 GENERAL

1.01 SUMMARY

A. Section Includes:
1. Provide field mounted elements of an electronic on/off single point level switch control utilizing a capacitance probe.

1.02 REFERENCES

A. The codes and standards generally applicable to the work of this section are listed herein.
ANSI/NEMA - 1985 Rev. 2 (5/88) - Enclosures for Electrical Equipment (1000 volts maximum)
ANSI - ANSI 16.5-81 Pipe Flanges and Flanged Fittings

1.03 SUBMITTALS

A. Provide submittals according to the requirements of Section 01300 except as specifically modified in this article. All submittals to be shipped under separate cover to the owner.
1. Operation and maintenance manual (one per unit).
2. Certified drawingsshowing outline dimensions, mounting options, and mounting accessories, if not included in Operation and Maintenance Manual.
3. Certificates of compliance.
4. Certified test reports.
5. Replacement parts and accessories listing, if not included in Operation and Maintenance Manual.
6. Name, address, and telephone number of the nearest repair facility.
7. Any characteristic, material, or specification listed as "Standard" will be listed by vendor at time of quotation.

1.04 QUALITY ASSURANCE

A. Manufacturer:
1. A firm regularly and currently engaged in design and manufacture of similar equipment.
2. Equipment shall be new and of current design.

B. Maintainability:
1. Designed for ease of maintenance and access to critical parts shall not require major disassembly.
2. Internal field adjustments to be easily accessible upon removal of a panel or cover.

3. Manufacturer or distributor shall provide replacement maintenance service for each item within 24 hours or less response time.

C. Materials and Installation:
1. Comply with requirements of referenced electrical codes and standards.
2. Codes and standards referred to shall be used for establishing minimum quality of the materials and equipment supplied and installed.
3. Capacities of equipment: not less than that indicated.

1.05 WARRANTY

A. Provide manufacturer's standard warranty for each of the specified items.

PART 2 PRODUCTS

2.01 EQUIPMENT

A. General:

1. Tag No:	See Table "A" Manufacturer to provide stainless steel tags securely attached to controller housing.
2. Function:	On/Off single point level switch control
3. Power Supply:	Operate at 120 V ac plus or minus 10 percent, 50/60 Hz, single-phase.
4. Operating temperature limits:	Minus 40 to plus 140 degrees F.

B. Level Switch Probe:

1. Orientation:	See Table "A"
2. Material:	316 SST
3. Insulation and Seals:	Manufacturer's standard
4. Insertion length:	See Tables "A"
5. Probe Connection:	3/4" NPT

C. Level Switch Controller:

1. Location:	Controller to be mounted on probe.
2. Enclosure:	NEMA 4
3. Conduit Connection:	1" NPT
4. Adjustable Response Time:	0 to 20 seconds
5. Level Control:	Provide field adjustable fail-safe control to either High or Low Level.

6. Range Sensitivity:	Provide range sensitivity of 0.2 pF.
7. Stability:	
a. Temperature:	Plus or minus 0.003 pF per degree F.
b. Line Voltage:	Plus or minus 0.25 percent per 20 volts.
8. Output relay:	Double pole, double throw.
a. Contact rating:	120 V ac; 5 Amp non-inductive, 3 Amp inductive.

D. Service Conditions:

1. Process material:	See Table "A"
2. Maximum process pressure:	See Table "A"
4. Agitation:	See Table "A"
5. Vessel material:	See Table "A"

2.02 ACCEPTABLE MANUFACTURERS:

A. Drexelbrook
B. Fisher & Porter
C. Great Lakes Instruments

PART 3 EXECUTION

3.01 EQUIPMENT TESTING AND CALIBRATION

A. Factory Tests and Calibration:
1. Factory-test point level controller by the manufacturer to assure satisfactory performance prior to shipment with an uncertainty not more than 1/2 of specified or claimed accuracy of instruments.

END OF SECTION

(Attachment - Table "A", 1 page)

TABLE "A"

Groundwater Extraction System

Tag No.	Service	Orientation of Level Switch Probe	Probe Insertion Length	Maximum Process Pressure, psig	Agitation, Horsepower	Process Material	Vessel Material
LS 300	High Level Sensing, Equalization Tank #1	Vertical Axis	42"	Atmospheric	TBD	Well Water	Carbon Steel
LS 402	Low Level Sensing, H2O2 Tote	Vertical Axis	42"	Atmospheric	None	Hydrogen Peroxide	Medium Density Polyethylene
LS 403A	Low Level Sensing, NaOH Tote	Vertical Axis	42"	Atmospheric	None	Sodium Hydroxide	Medium Density Polyethylene
LS 403B	Low Level Sensing, NaOH Tote	Vertical Axis	42"	Atmospheric	None	Sodium Hydroxide	Medium Density Polyethylene
LE 500	High Level Sensing, Clarifier	Vertical Axis	TBD	Atmospheric	TBD	Water	TBD
LS 506	High Level Sensing, Polymer Tote	Vertical Axis	42"	Atmospheric	None	Polymer	Medium Density Polyethylene
LS 610	High Level Sensing, Lift Station #1	Vertical Axis	18"	Atmospheric	No	Water	Steel
LS 715	High Level Sensing, Lift Station #2	Vertical Axis	18"	Atmospheric	No	Water	Steel
LS 812	Low Level Sensing, H2SO4 Tote	Vertical Axis	42"	Atmospheric	No	Sulfuric Acid	Medium Density Polyethylene

Note:
1. Sensor elements to have 4" ANSI 150# mounting flange type 316 stainless steel

SECTION
13431

DIFFERENTIAL PRESSURE TRANSMITTER

PART 1 GENERAL

1.01 SUMMARY

A. Section Includes:
1. Provide field mounted elements of electronic differential pressure transmitter and auxiliary equipment as described herein.

1.02 REFERENCES

A. The codes and standards generally applicable to the work of this section are listed herein.
ANSI/NEMA - 1985 Rev. 2 (5/88) - Enclosures for Electrical Equipment (1000 volts maximum)

1.03 SUBMITTALS

A. Provide submittals according to the requirements of Section 01300 except as specifically modified in this article. All submittals shall be shipped under separate cover to the owner.
1. Operation and maintenance manual (one per unit).
2. Certified drawings showing outline dimensions, mounting options and mounting accessories, if not included in Operation and Maintenance Manual.
3. Certificates of compliance.
4. Certified test reports.
5. Replacement parts and accessories listing, if not listed in Operation and Maintenance Manual.
6. Name, address, and telephone number of the nearest repair facility and/or information for obtaining on-site repair service.

1.04 QUALITY ASSURANCE

A. Manufacturer:
1. A firm regularly and currently engaged in design and manufacture of similar equipment.
2. Equipment shall be new and of current design.

B. Maintainability:
1. Designed for ease of maintenance and access to critical parts shall not require major disassembly.
2. Internal field adjustments to be easily accessible upon removal of a panel or cover.
3. Manufacturer or distributor shall be capable of repair or provide replacement maintenance within 24 hours or less response time.

1.05 WARRANTY

A. Provide manufacturer's standard warranty.

PART 2 PRODUCTS

2.02 EQUIPMENT

A. General:

1. Tag No.:	PDIT-700
2. Function:	Convert differential air pressure measurement, in linear proportion, to a 4 to 20 mA dc output signal capable of transmission into at least a 600 ohm load at 24V dc. No local indication
3. Power Supply:	24 Volts DC
4. Ambient Temp. Limits:	Minus 20 to plus 185 degrees F
5. Humidity Limits:	0-100 percent relative humidity

B. Transmitter: Differential Type

1. Output:	4-20 mA; Signal and power transmission provided on a single pair of wires; Digital process variable superimposed on 4-20 mA signal available, to any host that conforms to the HART protocol, for interrogation and diagnostics without interruption of the transmitter's output signal
2. Local Indication:	None
3. Range:	TBD
4. Minimum Span:	TBD
5. Overpressure Limit:	0 psia to 2,000 psig on either side without damage to the transmitter
6. Reference Accuracy:	±0.1% of span for spans from 1:1 to 6:1 of Upper Range Limit. Between 6:1 and 10:1 of Upper Range Limit, accuracy = ±0.15% of span or better.
7. Stability:	±0.1% of Upper Range Limit for six months
8. Ambient Temp. Effect:	At maximum span, zero error not to exceed±0.025% of span per 100 def F. The total effect including span and zero errors not to exceed ±0.5%.
9. Damping:	Analog output response user-selectable from 0 to 30 seconds minimum.
10. Failure Mode Alarm:	High (>20 mA) output

11. Configuration Memory: Non-volatile EEPROM memory to retain configuration, characterization, and digital trim data in event of power interruption
12. Fill Fluid: Silicone
13. Housing: NEMA 4
14. Enclosure Class: None-Hazardous

C. Construction:
All wetted parts to be 316 SST

1. Process Connection: 1/2-inch NPT 316L SST
2. Element Mat'l and Type: 316 SST Diaphragm

D. Process:
1. Process Fluid: Air

E. Accessories:
1. Provide mounting bracket for mounting to 2 inch pipe.
2. Provide transmitter with 316 SST drain/vent valves.

2.02 Acceptable Manufacturers:

A. Fisher & Porter
B. Rosemount

PART 3 EXECUTION

3.01 EQUIPMENT TESTING AND CALIBRATION

A. Factory Tests and Calibration:
1. Factory-test pressure transmitter elements by the manufacturer to assure satisfactory performance prior to shipment. Calibration shall be traceable to the National Institute of Standards and Technology (NIST) with an uncertainty not more than 1/2 of specified or claimed accuracy of instruments.

END OF SECTION

SECTION
13432

CHARACTERIZED BALL FLOW CONTROL VALVE

PART 1 GENERAL

1.01 SUMMARY

A. Section Includes:
   1. Provide field mounted elements of a "Characterized Ball" flow control valve as described herein.

1.02 RELATED SECTION

A. Section 13436 — Limitorque Quarter Turn Electric Actuator Positioner

1.03 REFERENCES

A. The codes and standards generally applicable to the work of this section are listed herein.
   ANSI - ANSI 16.5-81 Pipe Flanges and Flanged Fittings
   AISI - American Iron and Steel Institute

1.04 SUBMITTALS

A. Provide submittals according to the requirements of Section 01300 except as specifically modified in this article. All submittals to be shipped under a separate cover to the owner.
   1. Operation and maintenance manual (one per valve minimum).
   2. Certified drawings showing outline dimensions, mounting options, and mounting accessories, if not included in Operation and Maintenance manual.
   3. Certificates of compliance.
   4. Certified test reports.
   5. Replacement parts and accessories listing, if not listed in Operation and Maintenance Manual.
   6. Name, address, and telephone number of the nearest repair facility

7. Valve sizing data as follows:
   a. Control valve sizing sheet for flow conditions presented in this specification.
   b. Plots of the Installed Flow Characteristics, Installed Gain, and Noise Level of the flow conditions specified.
   c. Manufacturer shall supply calculations demonstrating that valves are not in cavitation state for the specified application.
8. Any characteristic, material, or specification listed as "Manufacturer's Standard" will be listed by vendor at time of quotation.

1.05 QUALITY ASSURANCE

A. Manufacturer:
   1. A firm regularly and currently engaged in design and manufacture of similar equipment.
   2. Equipment shall be new and of current design.
   3. The valve body shall have an attached stainless steel label showing the direction of fluid flow. The recommended flow direction shall be clearly and permanently labeled on the valve body.

B. Maintainability:
   1. Designed for ease of maintenance
   2. Access to critical parts shall not require major disassembly.
   3. Internal field adjustments where permitted or required easily accessible upon removal of a panel or cover.
   4. Manufacturer or distributor shall provide replacement maintenance for each item within 24 hours or less response time.

C. Materials and Installation:
   1. Comply with requirements of referenced electrical codes and standards.
   2. Codes and standards referred to shall be used for establishing minimum quality of the materials and equipment supplied and installed.
   3. Capacities of equipment: not less than that indicated.

1.06 WARRANTY

A. Provide manufacturer's standard warranties for each of the specified items.

PART 2 PRODUCTS

2.01 EQUIPMENT

A. General:
1. Valve Tag Number: See Table "A" (Attachment) Manufacturer shall provide stainless steel tags securely attached to the valve.
2. Service: See Table "A"

B. Service Conditions:
1. Fluid: Ground Water

		Units	Nominal Flow	Max Flow
2.	Flow Rate	GPM	*	*
3.	Inlet Press	PSIA	*	*
4.	Outlet Press	PSIA	*	*
5.	Diff Press	PSI	*	*
6.	Inlet Temp	deg F	70	70
7.	Specific Gravity		1.000	1.000
8.	Viscosity	Centi-poise	0.974	0.974
9.	Vapor Press	PSIA	0.363	0.363
10.	Req'd Cv		*	*
11.	Travel %		*	*
12.	Predicted SPL	dBA	TBD	TBD

*Note: See Table "A"

C. Line:

1. Pipe Line Size In: See Table "A" (Provided for information purposes only)
2. Pipe Line Size Out: See Table "A" (Provided for information purposes only)
3. Pipe Line Insulation: None

D. Valve Body/Bonnet:

1. Type: See Table "A"
2. Size: See Table "A" ANSI Class: 150
3. Max Press/Temp: See Table "A"/130 deg F ambient
4. Body/Bonnet Matl: Manufacturer's standard
   Bonnet: Manufacturer's standard
5. Flange Face Finish: Standard ANSI Class 150 raised face flanges per ANSI B16.5
6. End Extensions/Matl: None
7. Flow Direction: Flow direction arrow to be permanently attached to valve body.
8. Type of Bonnet: Manufacturer's standard
9. Packing Material: Manufacturer's standard
10. Packing Type: Manufacturer's standard
11. Ambient Temperature : -40 F deg to +200 F deg

E. Trim:

1. Characteristic: Equal Percentage
2. Rated Cv: See Table "A"
3. Ball Material: Manufacturer's standard
4. Seat Material: Manufacturer's standard
5. Stem Material: Manufacturer's standard
6. Ambient Temperature: -40 F deg to +200 F deg

F. Tests

1. Hydrostatic Pressure: 165 psig per ANSI B16.37-80
2. Shutoff Classification: Standard Maximum allowable shutoff differential pressure forward or reverse flow @ 150 F deg shall be 200 psi.

2.02 Acceptable Manufacturers:

A. Neles-Jamesbury
B. Worcester

END of SECTION

(Attachment - Table "A", 1 page)

TABLE "A"
Ground Water Extraction System

Extracted Ground Water Flow Control

Tag No.	Service	Valve Body Type	Valve Size	Inlet Outlet Line Size	Minimum Flow Maximum Flow gpm	Inlet Pressure psia	Outlet Pressure psia	Diff. Pressure psi	Calculated Cv	Calculated Travel %
FCV110	Well 110 Groundwater Extraction, Pump PW-110	Flange ANSI 150	1"	1"/2"	10 20	133 108	45 63	88 45	9.8 31.9	50.8 79.8
FCV 120	Well 120 Groundwater Extraction, Pump PW-120	Flange ANSI 150	3"	1.5"/3"	48 72	98 78	36 57	62 21	2.9 7.8	55.0 78.3
FCV310	Equalization Tank #1 Pre-Treated Groundwater, Pumps P-310 & P-311	Flange ANSI 150	2"	1.5"/3"	30 45	85 70	48 65	37 5	17.4 64.5	41.5 66.4
FCV330	Equalization Tank #2 Pre-Treated Groundwater, Pump P-330	Flange ANSI 150	2"	2"/4"	60 90	139 109	39 55	100 54	4.1 22.0	36.3 69.8
LCV610	Lift Station #1 Pre-Treated Groundwater, Pumps P-613 & P-614	Flange ANSI 150	3"	1.5"/3"	52 78	88 72	29 48	59 24	20.6 70.6	43.9 68.9
LCV715	Lift Station #2 Pre-Treated Groundwater, Pumps P-717 & P-718	Flange ANSI 150	1"	1"/2"	11 17	87 65	28 44	59 21	37.2 79.0	54.3 71.7

SECTION
13435

BUTTERFLY FLOW VALVE, PNEUMATIC ACTUATED

PART 1 GENERAL

1.01 SUMMARY

A. Section Includes:
1. Provide field mounted elements of a "Butterfly" flow valve system as described herein.

1.02 REFERENCES

A. The codes and standards generally applicable to the work of this section are listed herein.
ANSI - ANSI 16.5-81 Pipe Flanges and Flanged Fittings
AISI - American Iron and Steel Institute

1.03 SUBMITTALS

A. Provide submittals according to the requirements of Section 01300 except as specifically modified in this article. All submittals to be shipped under separate cover to tghe owner.
1. Operation and maintenance manual (one per valve minimum).
2. Certified drawings showing outline dimensions, mounting options, and mounting accessories, if not included in Operation and Maintenance manual.
3. Certificates of compliance.
4. Certified test reports.
5. Replacement parts and accessories listing, if not listed in Operation and Maintenance Manual.
6. Name, address, and telephone number of the nearest repair facility
7. Any characteristic, material, or specification listed as "Manufacturer's Standard" will be listed by vendor at time of quotation.

1.04 QUALITY ASSURANCE

A. Manufacturer:
1. A firm regularly and currently engaged in design and manufacture of similar equipment.
2. Equipment shall be new and of current design.

B. Maintainability:
1. Designed for ease of maintenance.

2. Access to critical parts shall not require major disassembly.
3. Internal field adjustments where permitted or required; easily accessible upon removal of a panel or cover.
4. Manufacturer or distributor shall provide replacement maintenance for each item within 24 hours or less response time.

C. Materials and Installation:
1. Comply with requirements of referenced electrical codes and standards.
2. Codes and standards referred to shall be used for establishing minimum quality of the materials and equipment supplied and installed.
3. Capacities of equipment: not less than that indicated.

1.05 WARRANTY

A. Provide manufacturer's standard warranties for each of the specified items.

PART 2 PRODUCTS

2.01 EQUIPMENT

A. General:
1. Valve Tag No: See Table "A" (Attachment)

Manufacturer shall provide stainless steel tags securely attached to the valve.

2. Service: See Table "A"

B. Service Conditions:

1. Fluid: Groundwater

	Units	Back Wash Flow	Max Flow	Norm Flow
2. Flow Rate	GPM	*	*	*
3. Inlet Press	PSIA	*	*	*
4. Diff Press	PSI	*	*	*
5. Inlet Temp	deg F	70	70	70
6. Specific Gravity		1.000	1.000	1.000

7. Viscosity	Centi-poise	0.974	0.974	.974
8. Vapor Press	PSIA	0.363	0.363	0.363
9. Req'd Cv		*	*	*
10. Travel	%	100	100	100

*Note: See Table "A"

C. Line:

1. Pipe Line Size In: See Table "A"
   Out: See Table "A"
3. Pipe Line Insulation: None

D. Valve Body:

1. Type: See Table "A"
2. Size: See Table "A". ANSI Class: 150
3. Max Press/Temp: See Table "A"
4. Body Material: Ductile iron with corrosion resistant protective epoxy coating.
5. Liner Material: PTFE or equivalent
6. Flange Spacers: Flange spacers shall not be required for installation. Only flange sealing gaskets as required are permitted.
7. Flange Face Finish: To accommodate a lined valve body
8. End Extensions Matl: None
9. Flow Direction: The valve body shall be capable of taking fluid flow in either direction.
10. Type of Bonnet: Standard
11. Packing Material: PTFE or equivalent consistent with the valve process application.
12. Packing Type: PTFE or equivalent consistent with the valve process application.
13. Ambient Temperature: +35 F deg to +200 F deg

E. Trim:

1. Characteristic: Equal Percentage
2. Rated Cv: See Table "A"
3. Disk Material: PTFE or equivalent encapsulated over ductile iron insert.
4. Seat Material: Seat material and design compatible with a lined valve body and encapsulated disk.
5. Stem Material: Stainless steel

6. Ambient Temperature: +35 F deg to +200 F deg

F. Actuator:

1. Type: Rack and Pinion Double Acting Pneumatic actuator with 4-way double solenoid valve.
2. Size: The sizing torque shall be based on the maximum torque encountered, during the stroke of the valve, when operating under a maximum working pressure of 150 psig and shutoff pressure of 150 psig.
3. On/Off: Actuator is for On/Off operation of a valve.
4. Utility Failure Mode: In the event of an air or electric failure, the valve shall remain in the last position.
5. Min Required Press.: 60 psig to fully stroke the installed valve.
6. Actuator Orientation: Actuator shall be aligned along valve flow axis.
7. Handwheel Type: Manual declutchable override handwheel shall be oriented perpendicular to the valve flow axis.
8. End-of-Travel Stops: Yes
9. Position Indicator: Yes

G. Switches:

1. Type: One solid state or magnetically actuated SPST NEMA 4 at each end of travel.
2. Contacts/Rating: 24 VDC @ 50 ma or 120 VAC @ 500 ma
3. Actuation Points: Fully open/Fully closed

H. Air Set:

1. Set Pressure: 80 psig
2. Filter: Yes Lubricator: Yes Gauge: Yes

I. Tests:

1. Hydrostatic Pressure: 165 psig per ANSI B16.37-80
2. Shutoff Classification: Maximum leakage is 1/100 of Class IV ANSI/FCI 70-2-76.

Maximum allowable shutoff differential pressure forward or reverse flow @ 150 F deg shall be 200 psi.

2.02 Acceptable Manufacturers:

A. Durco
B. Garlock

END OF SECTION

(Attachment - Table "A", 1 page)

TABLE "A"
Granulated Activated Carbon (GAC) Adsorption System
Treated Ground Water Flow Control

Tag No.	Service	Valve Body Type	Valve Size	Backwash Flow gpm	Max. Flow gpm	Min. Flow gpm	Maximum Inlet Pressure psia	Diff. Pressure psi	In/Out Line Size	Max Press/Temp psia/F	Required Cv	% Travel
FV 800A	Block Valve From Lift Station #2 to PH Adjustment Tank	Lug	4"	560	180	90	27.3	.25	4"	85/130	Max @ 100% open	On/Off 0-100
FV 800B	Influent Valve From Lift Station #2 to GAC	Lug	4"	560	180	90	27.3	.25	4"	85/130	Max @ 100% open	On/Off 0-100
FV 800C	Backwash Block Valve from GAC to Equalization Tank	Lug	4"	560	180	90	27.3	.25	4"	85/130	Max @ 100% open	On/Off 0-100
FV 800D	Effluent Valve from GAC to Potable Water	Lug	4"	560	180	90	27.3	.25	4"	85/130	Max @ 100% open	On/Off 0-100
FV 800E	Backwash Block Valve from Lift Station #2 to GAC	Lug	4"	560	180	90	27.3	.25	4"	85/130	Max @ 100% open	On/Off 0-100

SECTION 13436

LIMITORQUE QUARTER TURN ELECTRIC VALVE ACTUATOR/POSITIONER

PART 1 GENERAL

1.01 SECTION INCLUDES

A. Limitorque Quarter Turn Electric Valve Actuator/Positioner with options and accessories.

1.02 RELATED SECTIONS

A. Section 13432 - Characterized Ball Flow Control Valve.

B. Section 13451 - Modicon Programmable Logic Controller.

1.03 REFERENCES

A. The codes and standards generally applicable to this section are:

ANSI - American National Standards Institute

CCITT- Consultative Committee for International Telephone and Telegraph

IEC - International Electrotechnical Commission

NEMA - National Electrical Manufacturers Association

1.04 SUBMITTALS

A. Provide the following as a minimum with delivery of specified components:

1. Operation and Maintenance manual(s) (one set per actuator minimum) including but not limited to:
   a. Data for each component specified showing electrical characteristics and connection requirements;
   b. Operating and programming instructions;
   c. Instructions for component sub-assembly replacement, adjustments, calibration, preventive maintenance procedures and materials.

2. Certified drawings showing outline dimensions, mounting options, and mounting assessories, if not in Operation and Maintenance manual.

3. Warranties for each of the specified components.

4. Name, address, and telephone number of the nearest repair facility and information for obtaining on-site service.

5. List of replacement parts and accessories for each component and recommended spares, if not included in Operation and Maintenance manual.

6. Certified measurement of percentage valve movement in response to command signal inputs over 0% to 100% to 0%, valve fully open to valve fully closed (9 points as indicated below).

Command % Signal Input	Measured % Valve Position	Measured % Signal Feedback
0		
25		
50		
75		
100		
75		
50		
25		
0		

1.04 SYSTEM DESCRIPTION

A. Actuator Design Requirements:

1. Operating Unit:
The quarter turn electric valve actuator shall consist of a high torque reversible motor, self-locking reduction gearing, end of stroke limit switches, mechanical torque sensing switch, a declutchable handwheel device, and end of stroke adjustable mechanical stops, all as a self-contained unit.

2. Sizing:
Actuator shall be sized and selected against valve operating torque values and safety factors stated by the referenced valve manufacturer. The sizing shall be based on the maximum torque encountered during the stroke of the valve when operating under maximum working pressure of 200 psig and shutoff pressure of 200 psig.

3. Duty Rating:
For modulating service, actuator shall be rated for 50 percent of the maximum output torque ratings.

4. Output:
Actuator output shall be of a hollow bored design supplied with a bushing adapter suitable for removal and machining by the valve manufacturer, in order to insure proper

fit with the valve stem.

5. Enclosure:
Actuator enclosure shall be of cast aluminum construction, designed to meet NEMA 4 water tight requirements, with an epoxy finish and cadmium plated high strength steel hardware.

B. Positioner Design Requirements:

1. Control of the actuator shall be accomplished through a microprocessor based two wire position control system. The position control system shall consist of the field unit, located in the actuator, linked by a single shielded twisted pair to a Modicon Compact 984 Programmable Logic Controller (PLC) through an appropriate hardware communication interface. RS-485 signals shall be transmitted over the twisted pair, to and from the field unit, to communicate digital data generated by the the Modicon PLC acting as a master station. The protocol shall be Modbus operating at 9600 baud maximum but adjustable to a lower rate. The two wire network shall permit additional field units to be connected in a looped fashion.

2. All network connections shall be protected by high level surge protectors, including but not limited to, gas discharge tubes and surge suppression diodes. Surge suppression shall be in compliance with CCITT standards and IEC 801.5.

3. Enclosure:
Positioner enclosure shall be of cast aluminum construction, designed to meet NEMA 4 water tight requirements, with an epoxy finish and cadmium plated high strength steel hardware.

1.05 WARRANTY

A. Provide manufacturer's standard warranty on each component provided.

1.06 ENVIRONMENTAL

A. Operation:

1. Temperature: Minus 40 to plus 85 degrees Centigrade

2. Humidity: 0 to 95 percent non-condensing

1.07 MAINTENANCE

A. Maintainability:

1. Designed for ease of maintenance and access to critical parts and shall not require major disassembly.

2. Internal field adjustments to be easily accessible upon removal of a panel or cover.

B. Maintenance Service:

1. Manufacturer or Distributor shall offer a means for replacement or repair maintenance service for each component within 24 hours or less. This may be in the form of an on-site maintenance agreement or a program providing overnight shipment of replacement equipment with a return to factory of defective items.

PART 2 PRODUCTS

2.01 MANUFACTURERS

A. Limitorque Corporation
5114 Woodall Road
P.O. Box 11318
Lynchburg, Virginia 24506-1318

2.02 DISTRIBUTORS

A. To be determined at time of bid.

2.03 EQUIPMENT

A. Actuator Unit:

1.	Model:	LY Series Quarter Turn Electric Valve Actuator.
2.	Actuator Tag No.:	See Table "A" (Attachment A)
3.	Tag No. Type and Mounting:	Stainless steel, securely attached to the actuator.
4.	Service:	See Table "A"
5.	Electric Motor:	Reversible squirrel cage induction motor wired for 460 Volts, 3-phase, 60 Hz; class F winding insulation; permanently sealed type motor bearing.
6.	Operating Time:	30 seconds per 90 degrees
7.	Motor Brake:	None
8.	Reduction Gearing:	Double reduction unit consisting of self-locking worm gear drives suitable for maintaining valve position in the event of electric power failure; hardened alloy steel worm; alloy bronze worm gear; all power gearing grease lubricated.
9.	Limit Switches:	End of travel limit switches for each direction of travel; auxiliary switches capable of being set to operate for any point of travel; all switches shall be single-pole-double-throw, snap action type, totally enclosed and rated for 120 Volts AC.

	10. Torque Switch:	Double acting mechanical torque sensing switch responsive to loads encountered in either the opening or closing directions; switch shall be adjustable and have a calibration dial for each side of the switch; capable of operating during complete valve cycle without use of auxiliary relays, linkages, latches, or other devices; wired to shut off actuator motor in the event excessive loads are encountered during travel.
	11. Mechanical Stops:	Adjustable end of stroke mechanical stops.
	12. Handwheel:	Handwheel provided for manual operation; handwheel shall not rotate during motor operation; a seized motor shall not prevent manual operation of handwheel; when in manual operating position, actuator shall remain in this position until motor is energized at which time the actuator shall automatically return to electric operation and shall remain in motor operation until handwheel operation is desired; changeover to handwheel operation shall be accomplished by a positive declutching lever which disengages motor and motor gearing mechanically but not electrically; no loss of positional relationship between actuator and positioner, during handwheel operation.
	13. Valve Position Indicator:	Visual indication to show direction and position of valve movement through 90 degrees of rotation.
	14. Actuator Orientation :	See Figure 1 (Attachment B).
	15. Heater and Thermostat:	Standard 120 Volts AC, 20 Watt space heater for actuator compartment.
	16. Enclosure Class:	Non-Hazardous
	17. Safety Lockout:	Three phase disconnect switch capable of being locked in the off position mounted integral with actuator enclosure.
	18. Safety Labels :	Safety warning labels shall be secured to actuator housing sides so as to be visible from any direction.
B.	Positioner Unit:	
	1. Model:	UEC-DDC (Universal Electronic Controller - Distributed Digital Controller) with analog board and DDC-100M Two Wire Control.
	2. Input/Output Signal:	Digital commands over an RS-485 2-wire serial communication link using a subset of the Modbus protocol.
	3. Communication Link Capabilities:	
	a. Commands:	Open Valve Close Valve Stop Valve Lockout - Inhibit local and remote electrical operation

b. Status:	Valve open and opening Valve closed and closing Valve stopped Valve jammed Selector switch in local Valve moved by handwheel
c. Alarms:	Field unit failure Motor overloads tripped Torque switches tripped Communication channel failure Fail to energize or de-energize motor
4. Input/Output Capabilities:	
a. Digital Inputs:	9 (standard)
b. Digital Outputs:	3 (standard)
c. Analog Inputs:	None required
d. Analog Outputs:	None required
5. Accessories	
a. Local Control:	Actuator mounted LOCAL-REMOTE selector switch, valve OPEN pushbutton and indicator light, valve CLOSE pushbutton and indicator light, and valve STOP pushbutton wired directly to the positioner microprocessor. Malfunction or removal of serial communication link shall not affect local electrical operation.
b. Position Potentiometer:	Potentiometer feedback providing continuous indication of valve position.
c. Heater and Thermostat:	Standard 120 Volts AC, 20 Watt space heater for positioner compartment.
6. Positioning Accuracy:	With actuator and valve fully assembled, position accuracy not to exceed plus or minus 1.5 percent of 90 degrees rotation.

2.04 SOURCE QUALITY CONTROL

A. Manufacturer shall test and verify the conformance of all equipment listed to the specifications contained in the Limitorque product bulletins No. 150-10000 LY SERIES QUARTER TURN VALVE ACTUATORS Issue 4-92 or later revision, No. 450-10000 THE UEC-3 FROM LIMITORQUE, THE UNIVERSAL ELECTRONIC CONTROLLER Issue 2/94 or later revision, and No. 435-16000 TWO WIRE CONTROL SYSTEMS Issue 10-92 or later revision.

PART 3 EXECUTION

A. INSTALLATION

1. Installation shall be in accordance with the manufacturer's instructions and approved drawings.

END OF SECTION

Attachment A - Table "A", 1 page
Attachment B - Figure 1, 1 page

TABLE "A"

Granulated Activated Carbon (GAC) Adsorption System
Limitorque Quarter Turn Electric Actuator

Tag No	Service
ZY 110	Flow Control Valve Actuator Well 110
ZY 120	Flow Control Valve Actuator Well 120
ZY 310	Flow Control Valve Actuator Equalization Tank #1
ZY 330	Flow Control Valve Actuator Equalization Tank #2
ZY 610	Flow Control Valve Actuator Lift Station #1
ZY 715	Flow Control Valve Actuator Lift Station #2

ACTUATOR ORIENTATION

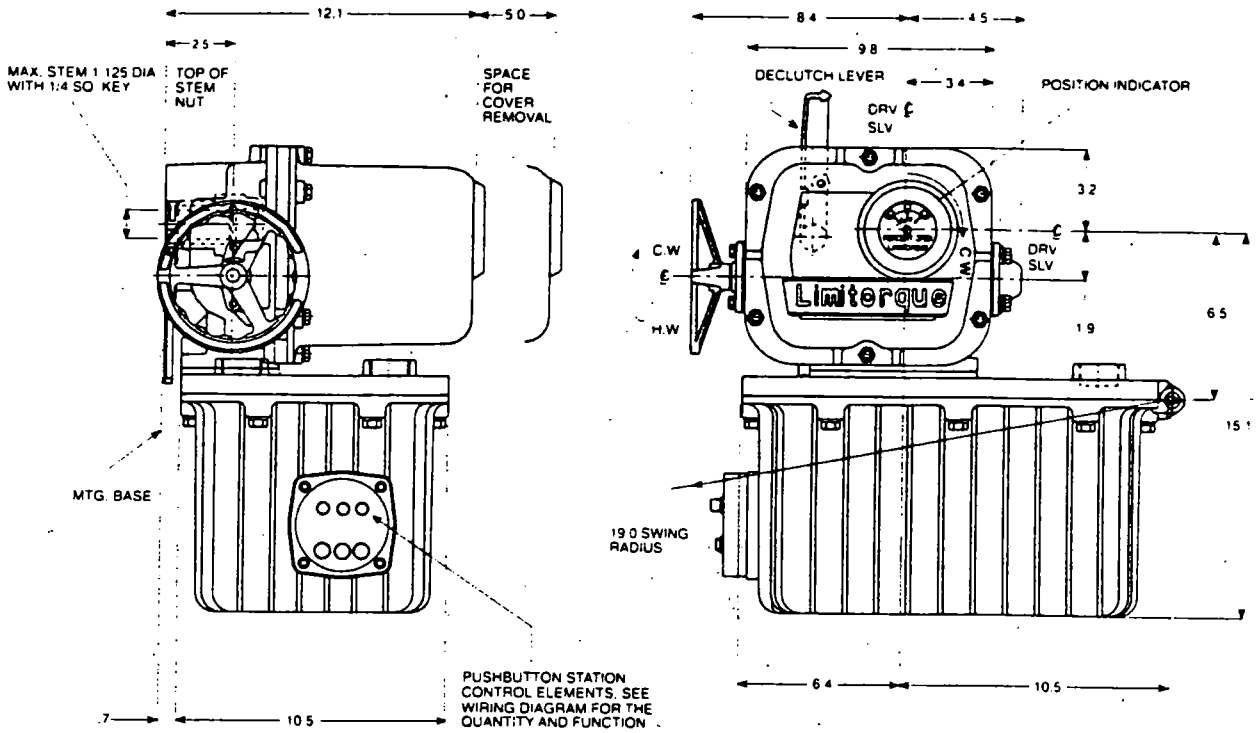

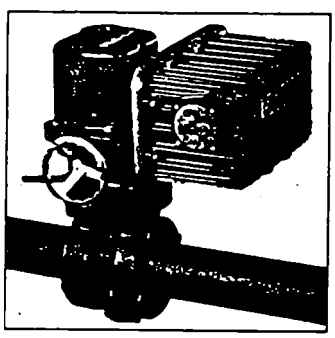

FLOW

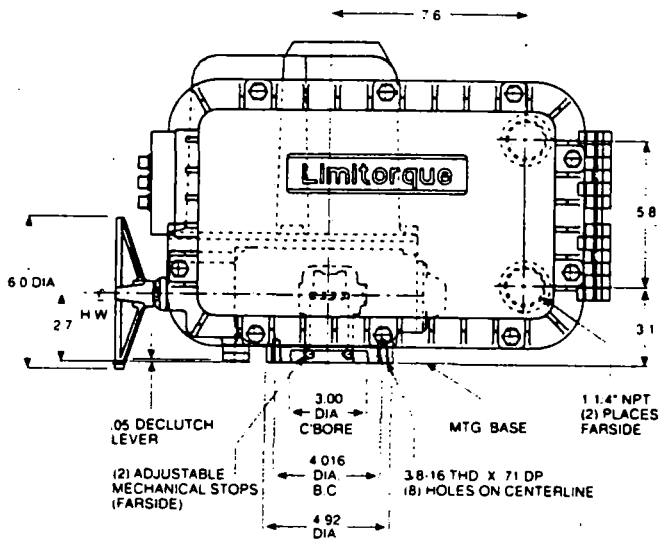

FIGURE 1

GRANSTON \SPECS\13436.00 LIMITORQUE QUARTER TURN ELECTRIC ACTUATOR-POSITIONER 06/13/94

13436 - B1

SECTION
13437

FLOW METER - MAGNETIC

PART 1 GENERAL

1.01 SUMMARY

A. Section Includes:
1. Provide field mounted elements of a microprocessor based magnetic flow meter and auxiliary equipment as described herein.

1.02 REFERENCES

A. The codes and standards generally applicable to the work of this section are listed herein.
ANSI - ANSI 16.5-81 Pipe Flanges and Flanged Fittings
NEMA - National Electrical Manufacturers Association

1.03 SUBMITTALS

A. Provide submittals according to the requirements of Section 01300 except as specifically modified in this article. All submittals shall be shipped under separate cover to the owner.
1. Operation and maintenance manual (one per flowmeter minimum).
2. Certified drawings showing outline dimensions, mounting options, and mounting accessories, if not included in Operation and Maintenance Manual.
3. Certificates of compliance.
4. Certified test reports.
5. Replacement parts and accessories listing, if not listed in Operation and Maintenance Manual.
6. Name, address, and telephone number of the nearest repair facility.

1.04 QUALITY ASSURANCE

A. Manufacturer:
1. A firm regularly and currently engaged in design and manufacture of similar equipment.
2. Equipment shall be new and of current design.

B. Maintainability:
1. Designed for ease of maintenance and repair.
2. Access to critical parts shall not require major disassembly.
3. Internal field adjustments where permitted or required; easily accessible upon removal of a panel or cover.

4. Manufacturer or distributor shall provide replacement maintenance service for each item within 24 hours or less response time.

C. Materials and Installation:
1. Comply with requirements of referenced electrical codes and standards.
2. Codes and standards referred to shall be used for establishing minimum quality of the materials and equipment supplied and installed.
3. Capacities of equipment: not less than that indicated.

1.05 WARRANTY

A. Provide manufacturer's standard warranty for each specified item.

PART 2 PRODUCTS

2.01 EQUIPMENT

A. General:
Magnetic flow transmitter shall use the principle of electromagnetic induction to produce a dc voltage proportional to the rate of liquid flow. Coil excitation shall be pulsed dc. The coils shall generate a magnetic field which in turn induces a voltage in the flowing liquid which is sensed by a pair of electrodes in contact with the liquid.

1. Tag No.:	See Table "A" (Attachment) Tags shall be stainless steel and securely attached to the flowmeter.
2. Function:	Transmitter shall convert the output of the flow element, in linear proportion, to a 4 to 20 mA dc signal capable of transmission into at least a 600 ohm load at 24 Vdc.
3. Power Supply:	Operate at 120 V ac plus or minus 10 percent, 60 Hz, single-phase.
4. Ambient Temp. Limits:	Minus 40 deg F to plus 150 deg F

B. Metering Element:

1. Connections

a. Line Size, Sched.:	See Table "A"
b. Line Material:	Carbon steel
c. Connection Type:	ANSI class 150
d. Connection Materials:	See Table "A"

2. Construction

a. Tube Material:	304 stainless steel with epoxy finish.
b. Liner Material:	PTFE
c. Electrode Type:	Flush
d. Electrode Mat'l:	316 stainless steel
e. Meter Casing:	NEMA 4
f. Grounding:	See Table "A"
g. Enclosure Class:	Non-hazardous
h. Accessories:	See Table "A"

3. Fluid

a. Fluid:	Groundwater
b. Max. Flow, Units:	See Table "A"
c. Max. Velocity, Units:	See Table "A"
d. Normal Flow:	See Table "A"
e. Max. Temp.:	100 deg F
f. Min. Temp.:	40 deg F
g. Max. Press.:	150 psig
h. Min. Press.:	20 psig
i. Min. Fluid Conductivity:	Greater than 50 uS/cm
j. Vacuum Possibility:	No

C. Transmitter:

1. Output:	Be capable of superimposing a digital communication signal utilizing the HART (Highway Addressable Remote Transducer) protocol on the 4-20 mA dc signal for interrogation and diagnostics without interruption of the transmitter's output signal.
2. Local Indication:	Transmitter to have direct reading digital output meter.
3. Range:	See Table "A"
4. Span:	See Table "A"
5. Accuracy:	Plus or Minus 0.5 percent of flow rate or better from 1 to 30 feet per second.
6. Stability:	Plus or Minus 0.1 percent of rate for 6 months.
7. Damping:	Electronic damping user selectable from 0 to 10 seconds minimum.
8. Failure Mode:	High (>20 ma) Output
9. Configuration Memory:	Non-volatile EEPROM memory to retain configuration, characterization, and digital trim data in event of power interruption.

10. Repeatablility: Plus or Minus 0.1 percent of rate.
11. Mounting: Integrally mounted to the metering element.
12. Housing: NEMA 4
13. Enclosure Class: Non-Hazardous

2.02 ACCEPTABLE MANUFACTURERS:

A. Fisher & Porter
B. Krohne
C. Rosemount

Part 3 EXECUTION

3.01 EQUIPMENT TESTING AND CALIBRATION

A. Factory Tests and Calibration:
1. Factory-test flow meter elements by the manufacturer to assure satisfactory performance prior to shipment. Calibration shall be traceable to the National Institute of Standards and Technology (NIST) with an uncertainty not more than 1/2 of specified or claimed accuracy of instruments.

END OF SECTION

(Attachment - Table "A", 1 page)

TABLE "A"

Granulated Activated Carbon (GAC) Adsorption System
Treated Ground Water Flow Control

Tag No.	Service	Meter Size	Line Size	Connection Type	Pipe\Line Connection Materials	Ground	Nominal Flow, gpm	Maximum Flow, gpm	Pipe Maximum Velocity ft/sec	Range	4mA to 20mA Span
FIT-110	Extracted Water Flow Well 110	2"	2"	Wafer, ANSI 150,	Carbon Steel	Straps	50	75	7.19	150	0 gpm to 100 gpm
FIT-120	Extracted Water Flow Well 120	1"	2"	Wafer, ANSI 150,	Carbon Steel	Straps	15	20	7.42	50	0 gpm to 30 gpm
FIT-310	Water Flow from Equalization Tank #1	2"	4"	Wafer, ANSI 150,	Carbon Steel	Straps	65	180	17.2	250	0 gpm to 200 gpm
FIT-330	Water Flow from Equalization Tank #2	1"	2"	Wafer, ANSI 150,	Carbon Steel	Straps	10	40	14.8	50	0 gpm to 50 gpm
FIT-813	Water Flow from PH Adjustment Tank	2"	4"	Wafer, ANSI 150,	Carbon Steel	Straps	90	180	17.2	250	0 gpm to 200 gpm

SECTION 13450

CONTROL PANELS

PART 1 GENERAL

1.01 SECTION INCLUDES

A. Pumping Well Control Panels.

B. Treatment Process Control Panels.

1.02 PRODUCTS INSTALLED BUT NOT FURNISHED UNDER THIS SECTION

A. Modicon 984-145 Programmable Logic Controller.

B. Modicon Modbus Plus Bridge/Multiplexer.

C. Arcom SHIM HART Interface Unit.

D. Moore Industries DIN Power Supply.

E. Eaton IDT PanelMate Video Control Panel.

1.03 RELATED SECTIONS

A. Section 13451 - Modicon Programmable Logic Controller.

B. Section 13452 - Modicon Modbus Plus Bridge/Multiplexer.

C. Section 13455 - Moore Industries DIN Power Supply.

D. Section 13456 - Arcom SHIM HART Interface Unit.

E. Section 13457 - Eaton IDT PanelMate Video Control Panel.

1.04 REFERENCES

A. NEMA ICS 6 - Enclosures for Industrial Control and Systems.

B. NFPA 70 - National Electrical Code.

C. NFPA 79 - Electrical Standard for Industrial Machinery.

1.05 DIN - Deutsche Industrial Norms - A German agency that sets engineering and dimensional standards.

1.06 SUBMITTALS

A. Provide the following as a minimum:

1. Manufacturer's data for each component specified.

2. Shop drawings to include:
   a. Dimensional and structural.
   b. Layout of components.
   c. Schematic diagrams.
   d. Interconnection diagrams.
   e. Loop diagrams.
   f. Programmable Logic Controller Input/Output list.
   g. External power requirements.
   h. Bill of material.

3. Operation and Maintenance Manual.

1.07 QUALITY ASSURANCE

A. Component Manufacturers:

1. Firms regularly and currently engaged in design and manufacture of similar components.

2. Components shall be new and of current design.

B. Materials and Construction:

1. Comply with requirements of referenced electrical codes and standards.

2. Codes and standards referred to shall be used for establishing minimum quality of the materials and components supplied and installed.

1.08 SYSTEM DESCRIPTION

A. Pumping Well Control Panels (CP-110,CP-120):

1. Each Pumping Well Control Panel shall contain the programmable logic controller (PLC) responsible for controlling well level, the HART interface unit, the Modbus Plus Network bridge/multiplexer, the instrument loop power supply, and an interior panel temperature sensor.

2. All PLC input/output points shall be connected through terminal blocks mounted in the panel. The Modbus Plus and Modbus network connections shall be made at the corresponding network device using appropriate cable and connectors. HART compatible device signal cables shall be brought from each device to the panel and

terminated at designated terminal blocks. Interconnections shall be made internally, at these terminal blocks, to route each device to the proper channel of the HART interface unit.

3. The PanelMate video control panel shall be mounted on the Pumping Well Control Panel door and used as an operator interface for manual control of the pump motor, process data readout, and PLC diagnostics.

4. A Resistance Temperature Device (RTD) type temperature transmitter shall be mounted internally to the panel to continuously monitor panel temperature.

B. Treatment Process Control Panels (CP-1,CP-2,CP-3,CP-4,CP-5):

1. The description of each Treatment Process Control Panel is the same as the Pumping Well Control Panel with the exception that the PanelMate video control panel is not used.

PART 2 PRODUCTS

2.01 COMPONENTS

A. Enclosure:

1. General:
   a. Single door steel enclosure 42.00-inches high, 36.00-inches wide, and 12.00-inches deep.

2. Construction:
   a. Rated NEMA 4.
   b. Minimum 14 gauge steel for body and door. Steel free of pitting and surface blemishes.
   c. All exterior seams continuously welded and ground smooth. Surfaces free of all corrosion, burrs, sharp edges, and mill scale.
   d. Stiffeners installed where necessary to ensure rigidity and prevent resonant vibrations.
   e. Pan type door construction. Door mounted with removable stainless steel hinge pins.
   f. Oil resistant gasket installed completely around door.
   g. Key lockable three point door latching system with rollers on latch rods.
   h. Panel mounting brackets for interior panel.
   i. Zinc phosphatized for corrosion protection.
   j. ANSI 61 gray polyester powder interior and exterior finish.

3. Accessories:
   a. 12-gauge steel interior panel 39.00-inches high, 33.00-inches wide; white enamel finish.

b. Touch-up paint for enclosure finish; furnished in spray can.

4. Manufacturers:
   a. Hoffman Engineering Co., A-3L42H3612LP or approved equal.

B. Wiring:

1. General:
   a. All electrical wiring shall be in accordance with the applicable requirements of NFPA 70 and NFPA 79.
   b. Wire size:
      600-volt class, 16 AWG PVC insulated stranded copper, Type MTW except where larger wire is required for a single load.
   c. Wiring for signal circuits:
      Twisted shielded pairs, 300-volt class, 20 AWG PVC insulated stranded copper, 100 percent shield coverage, separated at least 6-inches from power wiring.
   d. Wiring shall be color coded according to function. The following color code shall be used:
      BLACK - Unswitched Line Voltage Control or Power Circuits (Hot).
      WHITE - Line Voltage Circuits (Neutral).
      RED - Switched AC Control Circuits.
      BLUE - DC Control Circuits.
      YELLOW - Interlock Control Circuits Supplied From an External Power Source.
      GREEN - Equipment Grounding Conductor.
   e. Two conductor shielded cable shall be color coded BLACK (+) and CLEAR (-).
   f. Wiring shall be enclosed in plastic wireways with covers or neatly tied with plastic ties as appropriate. Low voltage signal wires and connections (24 volts or less) and high voltage wires and connections shall be separated to the greatest extent possible, preferably on opposite sides of the enclosure.
   g. Where wires are terminated on screw terminals, insulated crimped locking fork lugs shall be used. Lugs shall be of the appropriate size for the terminal screws.
   h. All interconnecting wires between panel mounted equipment and external equipment shall be terminated at numbered sectional terminal blocks mounted on 35 millimeter DIN type rail.
   i. Wiring shall be labeled at each end with the wiring identification shown on schematics and electrical drawings. Wire labels shall be the nonmetallic adhesive label or sleeve type with machine printed identification.
   j. Ground continuity between the enclosure, sub-panels, and enclosure doors shall be provided. All grounds shall be tied to a central location and not "daisy-chained" together. Where the grounding conductor is attached to a painted surface, the paint shall be removed in the area of the connection. Star type washers shall be used on all bolted ground connections.

2. Manufacturers:
   a. Type MTW 16 AWG wire:
      Anixter catalog standard or approved equal.

b. Twisted-pair shielded 20 AWG cable:
Belden 8762 or approved equal.

c. Insulated crimp type locking fork lugs:
Thomas & Betts nylon insulated STA-KON type or approved equal.

d. Plastic wireways:
Panduit PANDUCT Type E PVC white snap-in slot duct with Type C non-slip cover or approved equal.

e. Plastic wire ties:
Thomas & Betts nylon TY-RAP type or approved equal.

C. Circuit Breaker and Fuses:

1. General:

a. Circuit Breaker:
Molded case, thermal-magnetic, single pole, toggle operation, DIN rail mounted, 120-volts AC; current rating as shown on the Drawings.

b. Fuses:
Dual element time delay; 1/4-inch diameter, 1 1/4-inches long; current rating as shown on the Drawings.

2. Manufacturers:

a. Circuit Breaker:
Entrelec Type GM or approved equal.

b. Fuses:
Bussman Type MDL or approved equal.

D. Terminal Blocks:

1. General:

a. Double-sided, sectional barrier type with tubular compression clamp, rated for 300-volts; appropriately sized for wire gauge terminated and current load.

b. White plastic identification numbers installed.

c. Mounted on symmetrical 35 millimeter DIN rails.

d. Where possible, special purpose terminal blocks such as fuse holders or three level high density blocks shall be used.

e. Provide 20 percent spare terminals.

2. Manufacturer:

a. Terminal Blocks:
Entrelec Type M or approved equal.

b. Fuse Terminal Blocks:
Entrelec Type M 10/13T with blown fuse indicator or approved equal.

c. Three Level High Density Block:
Entrelec Type D 2,5/6.DA or approved equal.

E. Labels and Nameplates:

1. General:
   a. Provide machine printed self-adhesive labels identifying all major panel components as shown on the Drawings.
   b. Provide engraved plastic laminate identification nameplate mounted to the exterior of the control panel enclosure as shown on the Drawings.

2.04 SOURCE QUALITY CONTROL

A. Hardware Test:

1. Verify wiring connections and continuity as shown on the Drawings.

2. Perform system test on each sub-system verifying correct operation of each peripheral.

B. Software Test:

1. Where feasible, verify software operation through emulation or simulation of analog and digital inputs.

PART 3 EXECUTION

3.01 INSTALLATION

A. Install Control Panel as shown on Drawings, and according to applicable codes.

3.02 FIELD QUALITY CONTROL

A. Verify field wiring connections and continuity as shown on the Drawings.

B. Perform system test on each sub-system verifying correct operation of each peripheral.

END OF SECTION

SECTION 13451

MODICON PROGRAMMABLE LOGIC CONTROLLER

PART 1 GENERAL

1.01 SECTION INCLUDES

A. Modicon 984 Compact Programmable Logic Controller (PLC) with input/output units, options and accessories.

1.02 RELATED SECTIONS

A. Section 13452 - Modicon Modbus Plus Bridge/Multiplexer.

1.03 SUBMITTALS

A. Provide the following as a minimum with delivery of specified components:
1. Data for each component specified showing electrical characteristics and connection requirements.
2. Bound copies of operating and programming instructions.
3. Maintenance data including module replacement, adjustments, and preventive maintenance procedures and materials.
4. Warranties for each of the specified components.
5. Name, address, and telephone number of the nearest repair facility.
6. List of replacement parts and accessories for each component.

1.04 SYSTEM DESCRIPTION

A. Design Requirements:
The PLC shall be microprocessor based and programmed in written ladder logic. It shall be capable of performing both discrete and analog (minimum one Proportional-Intergral-Derivative loop) control functions. It shall also be capable of network communication between itself and a host computer or other similar PLCs.

1.05 WARRANTY

A. Provide manufacturer's standard warranty on each component provided.

1.06 ENVIRONMENTAL

A. Operation:

1. Temperature: 0 to 60 degrees Centigrade

2. Humidity: 0 to 95 percent non-condensing

1.07 MAINTENANCE

A. Maintenance Service:

1. Manufacturer or Distributor shall offer a means for replacement or repair maintenance service for each item within 24 hours or less. This may be in the form of an on-site maintenance agreement or a program providing overnight shipment of replacement equipment with a return to factory of defective items.

PART 2 PRODUCTS

2.01 MANUFACTURERS

A. MODICON, Inc.
Industrial Automation Systems
One High Street
North Andover, MA 01845

2.02 DISTRIBUTORS

A. To be determined at time of bid.

2.03 EQUIPMENT

A. Processor Unit:

1.	Model:	984-145
2.	User Memory:	8-KByte
3.	Storage Registers:	1920
4.	Input/Output Capacity:	256, any mix
5.	Scan Rate:	5 milliseconds per KByte
6.	Programming Language:	Ladder diagram; optional C language
7.	Logic Operations:	AND, OR, XOR, NOT
8.	Register Operations:	Store, recall
9.	Arithmetic Operations:	Addition, subtraction, multiplication, division, square root
10.	Enhanced Functions:	Floating point math, trigonometric functions, Proportional-Integral-Derivative (PID) control, subroutines

11.	Other Functions:	Timer, counter, stepping and shift register, data moving operations, and additional functions defined in the 984 base instruction set
12.	Non-volatile Program and Data Storage:	Battery backup
13.	Networking Capability:	Built-in Modbus and Modbus Plus interfaces

B. Power Supply Module P120:

1.	Input Voltage:	95 to 270 Volts AC, 47/63 Hz
2.	Output Voltage:	24 Volts DC at 1 Amp

C. Analog Input Module BADU 206:

1.	Description:	Voltage/Current (2 pole)
2.	Number of Channels:	4
3.	Operating Range:	±1/±10/.2-1/2-10 Volts DC ±20/4-20 milliamps DC
4.	Isolation:	Channel-Bus: 500 V, Channel-External Supply: 500 V Channel-Channel: None
5.	Input Impedance:	1M Ohm Voltage, 50K Ohm Current
6.	Resolution:	12 bit
7.	Accuracy:	0.5% of Full Scale
8.	Conversion Time:	10 milliseconds for all channels, maximum
9.	Internal Power Required:	20 milliamps @ 5 Volts DC
10.	External Power Required:	70 milliamps @ 24 Volts DC

D. Discrete Input Module BDEP-218:

1.	Description:	115 Volts AC Input
2.	Number of Points:	16
3.	Operating Range:	115 Volts AC, 47-63 Hz
4.	Isolation:	Optocoupler
5.	Number of Groups:	2
6.	Points per Group:	8
7.	On Conditions:	80-132 Volts AC
8.	Off Conditions:	0-35 Volts AC
9.	On Current:	6 milliamps/input
10.	Off Current:	3 milliamps/input
11.	Response Time Off to On:	10 milliseconds
12.	Response Time On to Off:	40 milliseconds
13.	Internal Power Required:	60 milliamps @ 5 Volts DC
14.	External Power Required:	None

E. Discrete Output Module BDAP-208:

1.	Description:	Relay (NO)
2.	Number of Points:	8
3.	Operating Voltage:	24-110 Volts DC, 24-250 Volts AC
4.	Isolation:	Relay Contact
5.	Number of Groups:	8
6.	Points per Group:	1

7. On Current per Point: 2 amps maximum, continuous
8. Wetting Current: 5 milliamps
9. Leakage Current: 1 milliamp
10. Response Time Off to On: 10 milliseconds
11. Response Time On to Off: 10 milliseconds
12. Internal Power Required: 60 milliamps @ 5 Volts DC
13. External Power Required: 150 milliamps @ 24 Volts DC

F. Accessories:

1. DTA-200 Primary Backplane

2. DTA-201 Five-Slot Secondary Backplane

3. AS-MBKT-085 Line Connector for Modbus Plus Port

2.04 SOURCE QUALITY CONTROL

A. Manufacturer shall test and verify the conformance of all equipment listed to the specifications contained in the Modicon publications 984-A120 COMPACT PROGRAMMABLE CONTROLLERS USER GUIDE, Modicon No. GM-A984-PCS Rev. A or later revision, and A120 SERIES I/O MODULES USER GUIDE, Modicon No. GM-A984-IOS Rev. B or later revision.

PART 3 EXECUTION

A. INSTALLATION

1. Installation shall be in accordance with the manufacturer's instructions and approved drawings.

END OF SECTION

SECTION 13452

MODICON MODBUS PLUS BRIDGE/MULTIPLEXER

PART 1 GENERAL

1.01 SECTION INCLUDES

A. Modicon Modbus Plus Bridge/Multiplexer.

1.02 RELATED SECTIONS

A. Section 13451 - Modicon Programmable Logic Controller.

1.03 SUBMITTALS

A. Provide the following, as a minimum, with delivery:

1. Data showing electrical characteristics and connection requirements.

2. Bound copy of operating and programming instructions.

3. Maintenance data including replacement items, adjustments, and preventive maintenance procedures and materials.

4. Warranty terms and conditions.

5. Name, address, and telephone number of the nearest repair facility.

1.04 SYSTEM DESCRIPTION

A. Performance Requirements:

1. The Modbus Plus Bridge/Multiplexer shall be microprocessor based and field configurable by resident, menu driven software using a personal computer running terminal emulation software. It shall be capable of connecting Modbus based devices to the Modbus Plus Network. Each of its Modbus ports shall be configurable as Master or Slave and capable of implementing any of the port parameters possible with conventional Modbus ports.

1.05 WARRANTY

A. Provide manufacturer's standard warranty.

1.06 ENVIRONMENTAL

A. Operation:

1. Temperature: 0 to 60 degrees Centigrade

2. Humidity: 0 to 95 percent non-condensing

1.07 MAINTENANCE

A. Maintenance Service:

1. Manufacturer or Distributor shall offer a means for replacement or repair maintenance service within 24 hours or less. This may be in the form of an on-site maintenance agreement or a program providing overnight shipment of replacement equipment with a return to factory of defective items.

PART 2 PRODUCTS

2.01 MANUFACTURERS

A. MODICON, Inc.
Industrial Automation Systems
One High Street
North Andover, MA 01845

2.02 DISTRIBUTORS

A. To be determined at time of bid.

2.03 EQUIPMENT

A. Modicon Model NW-BM85-000 Modbus Plus Bridge/Mux.

B. Modicon Modbus Plus Planning and Installation Guide No. GM-MBPL-001 or later edition.

2.04 SOURCE QUALITY CONTROL

A. Manufacturer shall test and verify the conformance of the equipment to the specifications contained in Modicon product bulletin No. MC-BM85-000, Rev. A or later revision.

PART 3 EXECUTION

A. INSTALLATION

1. Installation shall be in accordance with the manufacturer's instructions and approved drawings.

END OF SECTION

SECTION 13455

MOORE INDUSTRIES DIN POWER SUPPLY

PART 1 GENERAL

1.01 SECTION INCLUDES

A. Moore Industries Model DPS DIN Power Supply.

1.02 RELATED SECTIONS

A. Section 13450 - Control Panels.

1.03 SUBMITTALS

A. Provide the following as a minimum with delivery:

1. Data showing electrical characteristics and connection requirements.

2. Bound copy of operating and programming instructions.

3. Maintenance data including replacement items, adjustments, and preventive maintenance procedures and materials.

4. Warranty terms and conditions.

5. Name, address, and telephone number of the nearest repair facility.

1.04 DEFINITIONS

A. DIN - Deutsche Industrial Norms - A German agency that sets engineering and dimensional standards.

1.05 SYSTEM DESCRIPTION

A. Performance Requirements:

1. The Power Supply shall provide 24 Volts DC output voltage at 1200 milliamps output current for use with loop powered transmitters. It shall be designed with continuous short circuit and short term (< 15 seconds) overload protection. It shall also be designed with input/output isolation, convection cooling, and derated internal circuits for added dependability. The power supply shall be enclosed in a compact rail-mount DIN-style housing designed especially for industrial environments.

1.06 WARRANTY

A. Provide manufacturer's standard warranty.

1.07 ENVIRONMENTAL

A. Operation:
1. Temperature: 0 to 50 degrees Centigrade
2. Humidity: 5 to 95 percent

1.08 MAINTENANCE

A. Maintenance Service:

1. Manufacturer or Distributor shall offer a means for replacement or repair maintenance service within 24 hours or less. This may be in the form of an on-site maintenance agreement or a program providing overnight shipment of replacement equipment with a return to factory of defective items.

PART 2 PRODUCTS

2.01 MANUFACTURERS

A. Moore Industries
16650 Schoenborn Street
Sepulveda, California 91343

2.02 DISTRIBUTORS

A. To be determined at time of bid.

2.03 EQUIPMENT

A. Moore Industries DPS DIN Power Supply:

1.	Model:	DPS/24DC/1200MA/117AC [DIN]
2.	Output Voltage:	24 Volts DC ±10 percent, internally adjustable
3.	Output Current:	1200 milliamps maximum at 50 degrees Centigrade (175 milliamps minimum load)
4.	Input Supply Voltage :	117 Volts AC ±10 percent
5.	Housing:	Aluminum, DIN-style rail mount

2.04 SOURCE QUALITY CONTROL

A. Manufacturer shall test and verify the conformance of the equipment to the specifications contained in Moore Industries Data Sheet No. 11.10 DPS DIN POWER SUPPLIES, June 1990 or later revision and Data Sheet No. 13.04 ALUMINUM DIN-STYLE HOUSING, July 1989 or later revision.

PART 3 EXECUTION

A. INSTALLATION

1. Installation shall be in accordance with the manufacturer's instructions and approved drawings

END OF SECTION

SECTION 13456

ARCOM SHIM-8 HART INTERFACE UNIT

PART 1 GENERAL

1.01 SECTION INCLUDES

A. Arcom SHIM HART Interface Unit with options and accessories.

1.02 RELATED SECTIONS

A. Section 13451 - Modicon Programmable Logic Controller.

B. Section 13452 - Modicon Modbus Plus Bridge/Multiplexer.

1.03 SUBMITTALS

A. Provide the following as a minimum with delivery:

1. Data showing electrical characteristics and connection requirements.

2. Bound copy of operating and programming instructions.

3. Maintenance data including replacement items, adjustments, and preventive maintenance procedures and materials.

4. Warranty terms and conditions.

5. Name, address, and telephone number of the nearest repair facility.

1.04 DEFINITIONS

A. HART - Highway Address Remote Transducer - A digital communication protocol designed by and licensed from Rosemount Inc.

1.05 SYSTEM DESCRIPTION

A. Performance Requirements:

1. The HART Interface Unit shall be capable of providing communication access from a Modbus master device to HART compatible digital devices. It shall have the capability to multiplex up to 8 HART communication channels connected point-to-point or up to 64 multidrop HART devices. It shall also be capable of implementing the HART burst mode on any channel where the HART device is connected point-to-point.

1.06 WARRANTY

A. Provide manufacturer's standard warranty.

1.07 ENVIRONMENTAL

A. Operation:

1. Temperature: minus 20 to plus 70 degrees Centigrade

2. Humidity: 5 to 95 percent

1.08 MAINTENANCE

A. Maintenance Service:

1. Manufacturer shall offer a means for replacement or repair maintenance service within 24 hours or less. This may be in the form of an on-site maintenance agreement or a program providing overnight shipment of replacement equipment with a return to factory of defective items.

PART 2 PRODUCTS

2.01 MANUFACTURERS

A. Arcom Control Systems, Inc.
13510 South Oak Street
Kansas City, Missouri 64145

2.02 EQUIPMENT

A. Arcom Model SHIM-8, 8-channel HART Interface Unit.

2.03 SOURCE QUALITY CONTROL

A. Manufacturer shall test and verify the conformance of the equipment to the specifications contained in the SHIM HART Interface Unit product bulletin, latest revision.

PART 3 EXECUTION

A. INSTALLATION

1. Installation shall be in accordance with the manufacturer's instructions and approved drawings.

END OF SECTION

SECTION 13457

EATON IDT PANELMATE VIDEO CONTROL PANEL

PART 1 GENERAL

1.01 SECTION INCLUDES

A. Eaton IDT PanelMate Series 1000 Video Control Panel with options.

1.02 RELATED SECTIONS

A. Section 13451 - Modicon Programmable Logic Controller.

1.03 SUBMITTALS

A. Provide the following, as a minimum, with delivery:

1. Data showing electrical characteristics and connection requirements.
2. Bound copy of operating and programming instructions.
3. Maintenance data including replacement items, adjustments, and preventive maintenance procedures and materials.
4. Warranty terms and conditions.
5. Name, address, and telephone number of the nearest repair facility.

1.04 SYSTEM DESCRIPTION

A. Performance Requirements:

1. The Eaton IDT PanelMate Series 1000 Video Control Panel shall peform the function of operator interface to a Modicon Programmable Logic Controller (PLC). It shall be capable of replacing conventional hardwired pushbuttons, switches, equipment status indicators, numeric readouts, and message displays with a combination of video screens and sealed membrane control buttons which communicate directly with the PLC registers over the Modbus serial communications link. Video panel configuration shall be accomplished using a personal computer and DOS-based, off-line, fill-in-the-blanks configuration software.

1.05 WARRANTY

A. Provide manufacturer's standard warranty.

1.06 ENVIRONMENTAL

A. Operation:

1. Temperature: 0 to 50 degrees Centigrade

2. Humidity: 20 to 85 percent non-condensing

1.07 MAINTENANCE

A. Maintenance Service:

1. Manufacturer or Distributor shall offer a means for replacement or repair maintenance service within 24 hours or less. This may be in the form of an on-site maintenance agreement or a program providing overnight shipment of replacement equipment with a return to factory of defective items.

PART 2 PRODUCTS

2.01 MANUFACTURERS

A. Eaton IDT, Inc.
173 Heatherdown Drive
Westerville, Ohio 43081

2.02 DISTRIBUTORS

A. To be determined at time of bid.

2.03 EQUIPMENT

A. Eaton IDT PanelMate Video Control Panel:

1.	Model:	Series 1000, Part No. 1208
2.	Display:	5-inch monochrome backlit flat LCD with blink; 320 X 240 pixels resolution
3.	Operator Entry:	3 X 2 cells TouchPanel matrix for control selection; 0 to 9, . , - , numeric entry keypad; Four membrane control buttons
4.	Audio Output:	Built-in annunciator responds to control button actuation and alarm conditions (when desired)
5.	External Connections:	Serial port, selectable RS-422 or RS-232C, 110 to 19,200 baud
6.	Protective Front Panel:	NEMA 4 when properly mounted in a NEMA 4 enclosure;High contrast display filter; Polane enamel paint
7.	Input Supply Voltage:	24 Volts DC nominal, (18-30 Volts DC acceptable)

8. Input Supply Current: 440 milliamps at 24 Volts DC
9. Equipment Heat Output: 11 watts (38 BTU/hr)

B. Options:
1. Part No. 1224 Modbus PLC Communication Driver.
2. Part No. 1216 115 Volts AC to 24 Volts DC Converter Module.

2.04 SOURCE QUALITY CONTROL

A. Manufacturer shall test and verify the conformance of the equipment to the specifications contained in Eaton IDT product bulletin No. MK-ML002-00, 1993 or later revision.

PART 3 EXECUTION

A. INSTALLATION

1. Installation shall be in accordance with the manufacturer's instructions and approved drawings.

END OF SECTION

SECTION 13460

CONTROL ROOM HARDWARE

PART 1 GENERAL

1.01 SECTION INCLUDES

A. Desktop personal computer with color monitor, operating system software, printer, options and accessories.

1.02 RELATED SECTIONS

A. Section 13470 - Wonderware InTouch Man-Machine Interface Software.

1.03 SUBMITTALS

A. Provide the following as a minimum with delivery of specified components:

1. Data for each component specified showing electrical characteristics and connection requirements.

2. Bound copies of operating and programming instructions.

3. Original plus one backup copy of operating system software on 3-1/2-inch high density floppy disk media.

4. Maintenance data including module replacement, adjustments, and preventive maintenance procedures and materials.

5. Warranties for each of the specified components.

6. Name, address, and telephone number of the nearest repair facility.

7. List of replacement parts and accessories for each component.

1.04 SYSTEM DESCRIPTION

A. Performance Requirements:

1. The desktop personal computer (PC) located in the Control Room shall be used as the primary operator interface to the Process Control and Monitoring System (PCMS) for the Final Stabilization Action at the Ciba-Geigy Facility, Cranston, Rhode Island. It shall be capable of running Microsoft DOS, Microsoft Windows 3.1 and the Wonderware InTouch Man-Machine Interface software. It shall also be capable of communicating, through an appropriate interface board and driver software, to the

Modicon Modbus Plus network for sending and retrieval of data from PCMS Modicon Programmable Logic Controllers.

2. The PC monitor shall be a color, low emissions type with a 15-inches measured diagonally viewing area and multi-sync refresh rate capability. The monitor shall be capable of supporting Video Graphics Array (VGA), SuperVGA, and 1024x768 (non-interlaced) lines resolution.

3. Connected to the PC parallel port shall be a 24-wire dot-matrix type printer capable of printing graphics and letter quality text on 8-1/2-inches by 11-inches fanfold or cut sheet paper. It shall also have the capability, using the appropriate ribbon, to perform seven color printing.

4. Also connected to the PC shall be a external combination fax and data modem. The modem shall support speeds up to 14,400 bits per second. The modem shall be used for remote dial-up and monitoring of the PCMS and to alert key personnel about PCMS alarm conditions through the fax dial-out feature.

5. The PC shall be protected against surges, spikes, brownouts, blackouts, and line noise by an uninterruptible power supply (UPS).

1.05 WARRANTY

A. Provide manufacturer's standard warranty on each component provided.

1.06 MAINTENANCE

A. Maintenance Service:

1. Manufacturer shall offer a renewable one year on-site maintenance agreement for each component.

B. Software upgrade:

1. Manufacturer shall offer a renewable one year software upgrade service.

PART 2 PRODUCTS

2.01 DESKTOP PERSONAL COMPUTER

A. Central Processing Unit (CPU):

1. The CPU shall be an Intel 486DX2 microprocessor with intergral math coprocessor. Clock speed shall be 50 MHz. The unit shall support 32-bit memory addressing and a 32-bit data path. ROM based power-on and self diagnostics shall be provided to automatically boot-up the computer and check major system components.

B. System Board:

1. System Board shall contain six full-size connector slots for the installation of feature circuit boards. Four of these slots shall be for 16-bit, ISA circuit boards. Two of the slots shall be compatible with either VESA or ISA circuit boards.

2. Installed Random Access Memory (RAM) shall be 16 megabytes with the capability to expand to 64 megabytes. The memory access time shall be 70 nanoseconds or better.

3. Installed cache memory shall be 128 kilobytes.

4. System Board shall contain a disk controller capable of operating a minimum of three disk drives. The unit shall provide the necessary control for both the floppy and hard disk drives specified.

5. Integral to the System Board shall be a keyboard controller, interrupt controller, direct memory access (DMA) controller, mouse controller, and a battery powered real-time clock.

6. System Board shall have the capability to control two asynchronous serial communications innput/output ports and one parallel printer port. The serial ports shall have 9-pin, D-shell, RS-232C connectors. The parallel port shall have a 25-pin, D-shell connector.

C. Video Adapter:

1. Video adapter shall be VESA-VL Local Bus compatible and be installed in one of the System Board VESA/ISA slots. It shall have one megabyte of Video RAM and be capable of displaying 256 colors out of a pallette of 16.7 million. It shall produce a screen resolution of 640 horizontal by 480 vertical pixels or 1024 horizontal by 768 vertical pixels non-interlaced, selectable by software. The adapter shall be Video Graphics Array (VGA) and SuperVGA (SVGA) compatible. The adapter shall also provide text displays of 80 columns by 25 lines. The video output signal shall include RGB, horizontal and vertical sync, and intensity. Signal level shall be TTL and the port shall be a 15-pin, D-shell connector.

D. Hard Disk Drive:

1. The hard disk drive shall be an Integrated Device Electronics (IDE) type with an unformatted capacity of 340 megabytes. It shall have an average access time of 23 milliseconds or less and a data transfer rate of 5 megabits per second or better. The unit shall be controlled by the disk controller specified above.

E. Floppy Disk Drive:

1. The floppy disk drive shall provide 1.44 megabytes of formatted capacity and shall use 3.5-inch soft-sectored, double-sided, high density disks. The unit shall be controlled by

the disk controller specified above.

F. Keyboard:

1. The keyboard shall be manufacturer's standard 101-key enhanced IBM AT-style.

G. Mouse:

1. The mouse shall be manufacturer's standard 2-button mouse.

H. Storage Bays:

1. The computer shall have a total of five storage bays: three 5.25-inch external, one 3.5-inch internal, and one 3.5-inch half-height external containing the 3.5-inch floppy disk drive specified above.

I. Internal Power Supply:

1. The computer shall be powered by 120 Volts AC, 60 Hz and have an internal power supply rated at 200 watts output.

J. Operating Systems Software:

1. The computer shall be preloaded by the manufacturer with the latest version of MS-DOS and Windows for Workgroups 3.11.

J. Manufacturer:

1. Digital Equipment Corporation Model DECpc LPx+.

2.02 MONITOR

A. General:

1. The monitor shall be a 15-inch flat square, low emissions multi-frequency color CRT. The unit shall have a .28 millimeter dot pitch and a screen resolution up to 1024 horizontal by 768 vertical pixels (SVGA) non-interlaced.

2. The monitor's video input signals shall be TTL type and include horizontal and vertical sync, red, green and blue color, and intensity. The monitor shall be compatible with screen refresh frequency rates of 60 to 75 Hz. The unit shall include a 15-pin (DB15) signal cable.

3. The monitor shall be powered by 120 Volts AC, 60 Hz and be designed to use a minimum amount of energy. It shall meet Swedish MPRII standards for low electro-magnetic and electro-static emissions.

B. Construction:

1. The monitor shall be housed in a desktop enclosure with tilt-swivel base and front-panel controls.

C. Manufacturer:

1. Digital Equipment Corporation Model FR-PCXBV-PC.

2.03 PRINTER

A. General:

1. Printer shall be a 24-wire dot-matrix impact type with full ASCII character set and capatibility with the Epson LQ and IBM Proprinter protocols as a minimum. It shall be capable of printing letter-quality text and graphics with a density of 360 dot per inch. Smallest character pitch shall be 16.67 characters per inch minimum. It shall have a built-in Centronics type parallel interface for connection to the standard parallel printer port on a personal computer.

2. Effective print speed shall be 300 characters per second in draft mode and 99 characters per second in letter quality mode minimum.

3. The printer shall be capable of 7-color printing with the appropriate ribbon installed and provide the driver interface to allow printing from Micrsoft Windows 3.1.

4. Printer shall be capable of accepting tractor feed type fanfolded paper, cut sheets, and up to 5 multipart forms.

B. Manufacturer:

1. Digital Equipment Corporation Model DECwriter 95.

2.04 MODEM

A. General:

1. The modem shall be a desktop type and be capable of implementing the V.32bis/V.32 standards for data communications and the Group 3/EIA TR-29 Class 2 standards for fax transmissions. Speeds shall be 14,400 bits per second (V.32bis) and 9600 bits per second (V.32) for data communications and either 9600 or 4800 bits per seconf for fax transmissions. The modem shall also be downward compatible with modems at speeds as low as 300 bits per second. The modem shall also have the capability for V.42 error correction, V.42bis data compression in which the data communication speeds can approach 57,600 bits per second and data sent will be 100% error free and the Microcom Network Protocol (MNP) Level 5 data compression protocol.

2. The modem shall provide interactive automatic dialing capability, Command mode option configuration and be compatible with the "AT" command set. It shall be capable of storing in non-volatile memory up to ten command line/telephone numbers, of up to 60 digits each.

3. The modem shall be able to use pulse and/or tone dialing methods and have the ability to recognize dial tones and busy signals for reliable call-progess detection.

4. The shall be powered by 120 Volts AC, 60 Hz through an appropriate adapter provided by the manufacturer.

5. Fax modem software shall be provided by the maufacturer and be compatible with Microsoft Windows 3.1.

B. Manufacturer:

1. Multi-Tech Systems Model MT1432BA.

2.04 UNINTERRUPTIBLE POWER SUPPLY

A. General:

1. The Uninterruptible Power Supplly (UPS) shall provide protection against power surges, spikes, brownouts, blackouts, and line noise. The UPS shall be capable of supplying a load of 600 Volt-Amps for a minimum of 5 minutes.

B. Manufacturer:

1. American Power Conversion Model APC 600VA.

PART 3 EXECUTION

A. INSTALLATION

1. Installation shall be in accordance with the manufacturer's instructions and approved drawings.

END OF SECTION

SECTION 13470

WONDERWARE INTOUCH MAN-MACHINE INTERFACE SOFTWARE

PART 1 GENERAL

1.01 SECTION INCLUDES

A. Wonderware InTouch Man-Machine Interface Software.

1.02 RELATED SECTIONS

A. Section 13451 - Modicon Programmable Logic Controller.

1.03 SUBMITTALS

A. Provide the following as a minimum with delivery of specified components:

1. Two (2) sets of Operation, Maintenance and Software Reference manuals on each of the specified components.

2. Warranties for each of the specified components.

3. Name, address, and telephone number of the nearest support facility.

4. Software license agreements and, if required, registration cards.

1.04 WARRANTY

A. Provide software supplier's standard warranty on each component provided.

1.05 MAINTENANCE

A. Maintenance Service:

1. Software supplier or Distributor shall offer a means for immediate telephone software support during the hours of 8 A.M. to 5 P.M. Eastern Time Monday through Friday and on-site support for each component within 24 hours or less.

2. Provide a renewable one year maintenance agreement for each component.

B. Software Upgrade:

1. Provide a renewable one year software upgrade service.

1.06 SYSTEM DESCRIPTION

A. Performance Requirements:

1. General:
   a. The specifications that follow indicate the extent and requirements of the supplier's software. If any departures from the specifications are deemed necessary, details of such departures and the reasons shall be submitted to the Owner for review and approval.
   b. Software furnished under this Section shall be the latest revision standard product.
   c. This specification describes the minimum software requirements. Where the software supplier's standard configuration includes additional features not specifically described herein, they shall be furnished as part of the software package.
   d. The design of software furnished shall utilize concepts, techniques, and features which provide maximum reliability and ease of troubleshooting. Diagnostic software, if available, shall be furnished to aid in troubleshooting on the system level.
   e. The software shall be distributed on standard 3-1/2-inch floppy diskettes and shall allow the user to copy the diskettes for backup. Any copy protection shall be a hardware key only.
   f. Documentation shall be included that thoroughly explains how to load, configure, and use the specified software. The documentation shall be indexed and provided in a hard bound cover such as a three ring binder.

2. Overview:
   a. The software shall be used for data acquisition, text and graphic data display, alarming, realtime and historical trending, and report generation of process data from several Modicon 984-145 Programmable Logic Controllers (PLC). The software shall also function as an operator interface to the PLC controlled processes.
   b. A personal computer (PC) shall be used as the process graphic display and the interface to the software functions. The PC shall communicate over a Modbus Plus multidrop serial link to each of the PLCs. As a minimum, the PC shall be used for the following functions:
      (1) Communication to, and information retrieval from the PLCs;
      (2) Viewing of the process database status indicators such as loop status, and equipment status;
      (3) Alarm display, logging, and acknowledgement;
      (4) Viewing real time trends; and
      (5) Activation of the data retrieval system to get information and display trends from the Historical Data Files.

3. Process Interface:

a. The software package shall be an integrated set of software modules that are designed to run on an IBM compatible PC utilizing a 486DX CPU. The core of the package shall be a memory resident realtime data base that is structured as function blocks and which is configured by fill-in-the-blank keyboard entries. All function blocks shall be identified with a tag name having a minimum of nine alphanumeric characters.

b. The package shall run under Microsoft's MS-DOS 6.0 or later and Windows 3.1. It shall include a means for running multiple tasks in the background concurrently while the foreground program is running. The user shall be able to revise the database on-line while the system is operating. The software shall be designed to interface with standard spreadsheet and database programs, such as Microsoft EXCEL and DBase IV with a minimum of custom programming.

c. The software package shall provide the following as a minimum:

(1) Database Updating:

The main background task shall be to update the database continually by communicating to the PLCs to obtain process information.

(2) Alarm Manager:

The software shall be configurable to produce alarm messages based on specific conditions that occur in the database. The software shall have the capability to direct the message to the PC monitor, a printer connected to the PC, and/or a disk file as configured by the user. The software shall also have the capability to cause the PC to audibly alarm ("beep") whenever an alarm occurs and to change color on the graphic display according to alarm status. The user shall be able to enable or disable any alarm on a point-by-point basis. When displayed on the screen, the alarms shall flash until acknowleged. Acknowledgement shall be on a point-by-point basis. The software shall also provide between 1 and 999 prioritized alarms configurable by the user, and an alarm sub-group hierarchy.

(3) Graphic Display:

The software shall display user selected information from the process database automatically on user created color graphic displays. The user, through the graphic display, shall be able to acknowledge alarms, call up different displays, or request printed output. A password protection or authorization level scheme shall be provided to prevent accessing of protected displays by unauthorized personnel. User interaction with the PCs shall be made through the PC keyboards or through a mouse. For keyboard entries, function keys shall be the method routinely used to access PC displays. The mouse shall be used to point to and click on targets.

(4) Graphics Editor:

The editor shall use either object oriented graphics to build process displays. The software shall be compatible with Video Graphics Adaptor (VGA) hardware or better, and shall support a minimum of 16 foreground colors and 8 background colors. The number of displays shall be limited only by memory storage space. The user shall be able to cut

and paste, edit or erase screen areas within a display, and read or write symbols or subpictures to memory storage.

(5) Realtime Trending:
Realtime trending shall be an automatic background task that collects user selected data samples from the database and presents the data in a graphical trend display. The task shall be capable of displaying a minimum of four trended variables on a single time-value graph with each point displayed with a different color. The trending display shall have the capability of being scaled in engineering units and shall include a movable time cursor that provides the exact value of the variable at the selected point. The trending display shall also include chart shift, pan, and zoom, and the capability to print the display on a color printer when requested by the user.

(6) Historical Trending:
The historical trending task shall be an automatic background task that collects user selected data samples from the database and stores them in a disk file along with the sample's tag name and time of sample. The display shall have the same specifications as described under Realtime Trending with the additional requirement that the user shall have the capability to print user configured trend graphs automatically at a user preselected time.

(7) Task Scheduler:
This feature shall enable the user to schedule tasks such as daily or monthly report, based on either time and date, or an event that occurs in the database.

(8) Report Generator:
The user shall be able to define a report on-line and then have the report generated on-demand or automatically by the scheduler specified above. The report shall be organized on a page-by-page basis and shall be directed to the PC monitor, system printer, or to a disk storage file.

(9) Statistical Process Control/Statitical Quality Control (SPC/SQC):
The user shall be able to compare actual process performance against statistical standards with all charts and limits user configurable.

(10) Recipes:
The user shall be able modify and download a recipe (process variables such as set points and process limits) to any of the PLCs.

(11) Windows Dynamic Data Exchange (DDE) and NETDDE:
The software shall have the capability to share data with other Windows applications on the same PC via DDE and via NETDDE with Windows applications residing on different PCs networked together over any standard NETBIOS network or connected over a serial communication link.

(12) Modbus Plus Network Interface:
The software shall communicate over a Modbus Plus serial link to the networked PLCs. The communication task shall be able to obtain all process information available from the PLCs and be able to write information representing operator interface commands to a selected PLC.

4. Local Area Network Access:
   a. The software package shall have built-in network security features to prevent unauthorized access to process data from remote nodes.

5. Future Expansion:
   a. The software package shall be capable of interfacing at any time to additional devices with minimum reconfiguration and interruption of existing process interface applications.

PART 2 PRODUCTS

2.01 MANUFACTURERS

A. Wonderware Corporation
100 Technology Drive
Irvine, California 92718

2.02 DISTRIBUTORS

A. To be determined at time of bid.

2.03 COMPONENTS

A. InTouch Standard Runtime System with I/O Version 4.0 or later version.

B. Modbus Plus DDE Server Version 4.01 or later version.

2.04 SOURCE QUALITY CONTROL

A. Manufacturer shall test and verify the conformance of all products listed to the specifications contained in the latest InTouch product bulletin and Modbus Plus DDE Server data sheet.

PART 3 EXECUTION

NOT USED

END OF SECTION

SECTION 15051
WALL PIPES, FLOOR PIPES AND PIPE SLEEVES

PART 1 GENERAL

1.1 SECTION INCLUDES

A. Furnish and install all floor pipes, pipe sleeves, wall pipes, other wall pieces, mechanical seals and escutcheons required to complete the Work.

1.2 RELATED SECTIONS

1. Section 03300, Concrete.

2. Section 09900, Painting.

3. Division 15, Sections on Piping Valves and Specials.

1.3 QUALITY ASSURANCE

A. Reference Standards: Comply with applicable provisions and recommendations of the following except as otherwise shown or specified.

1. AWWA C100, Cast Iron Pressure Fittings.

2. AWWA C104 (ASNI A21.4), Cement Mortar Lining for Cast Iron and Ductile Iron Pipe and Fittings for Water.

3. AWWA C106 (ANSI A21.6), Cast Iron Pipe Centrifugally Cast in Metal Molds, for Water and Other Liquids.

4. AWWA C110 (ANSI A21.6), Gray-Iron and Ductile-Iron Fittings, 2 in. through 48 in., for Water and Other Liquids.

5. AWWA C111 (ANSI A21.11), Rubber Gasket Joints for Cast-Iron and Ductile-Iron Pressure Pipe and Fittings.

6. AWWA C115 (ANSI A21.15), Flanged Cast Iron and Ductile Iron Pipe with Threaded Flanges.

7. AWWA C151 (ANSI A21.51), Ductile-Iron Pipe, Centrifugally Cast in Metal Molds or Sand-Lined Molds, for Water or Other Liquids.

8. AWWA C200, Steel Water Pipe 6 Inches and Larger.

9. ANSI B16.1, Cast Iron Pipe Flanges and Flanged Fittings.

10. ANSI B16.4, Cast Iron Screwed Fittings.

1.4 SUBMITTALS

A. Shop Drawings: Submit for approval the following:

1. Detailed drawings and data on all wall and floor pipes, and pipe sleeves.

2. Submit and coordinate these with Drawings required for all piping system.

PART 2 PRODUCTS

2.1 MATERIALS

A. General:

1. On the Drawings, where the type of penetration is not indicated the CONTRACTOR shall use either a typical detail as shown on the Drawings or a detail approved by the Engineer.

B. Wall and Floor Pipes:

1. Material: Same as specified for the piping connected to wall or floor pipe, unless otherwise shown on the Drawings or approved by the Engineer.

2. End Connections: As shown on the Drawings or approved by the Engineer.

3. Thickness: Same as specified for the piping connected to wall or floor pipe unless otherwise shown or specified.

4. Provide water stop at mid-point of wall or floor for anchorage and watertightness.

5. Pipes ends shall be flush with wall or floor face unless otherwise shown.

6. Flanged ends and mechanical joint bells shall be drilled and tapped for studs. Provide stainless steel studs.

C. Pipe Sleeves: Pipe sleeves shall conform to the details on the Drawings. Where not shown conform to the following as a minimum:

1. Provide sleeves of Schedule 40 black steel pipe or cast iron. Ends of the sleeve shall be cut square and reamed smooth. Sleeves 3 inches and larger shall have steel anchor lugs welded to the pipe for embedment into masonry and concrete.

D. Mechanical Seals: Provide link-type mechanical seals with adjusting bolts in all pipe sleeves unless otherwise approved by CONTRACTOR suitable for 20 psi working pressure.

1. Type: Mechanical seals through non-fire rated walls or floors:

a. Pressure Plate: Glass reinforced nylon plastic.

b. Bolt and Nut: type 316 stainless steel.

c. Sealing Element: EPDM rubber.

2. Type: Mechanical seals through fire rated walls or floors; two independent mechanical seal assemblies required:

a. Pressure Plate: Low carbon steel, zinc galvanized plated.

b. Bolt and Nut: lOW CARBON STEEL ZINC GALVANIZED.

c. Sealing Element: Silicon rubber.

3. Manufacturer: Provide seals of one of the following:

a. Thunderline Corporation

b. Or equal.

E. Wall, Floor and Ceiling Plates:

1. Pipes passing through wall, floors and ceiling in finished rooms shall be provided with escutcheon plates of cast brass or cast iron nickel plated, hinged with set screws.

2.2 SURFACE PREPARATION AND PAINTING

A. All exposed surfaces of wall pipes, floor pipes and pipe sleeves shall be prepared and painted in accordance with the requirements of Section 09900.

PART 3 EXECUTION

3.1 INSTALLATION

A. Wall and Floor Pipes: Install as shown and in accordance with approved Shop Drawings.

B. Pipe Sleeves:

1. Use sleeves wherever pipes pass through walls, partitions, floors, and roofs unless otherwise shown.

2. In process areas all sleeves through floor slabs shall extend a minimum of 2-inches above finished floor.

3. In finished areas all sleeves through floor slabs shall extend a maximum of 1/4-inch above finished floor.

4. Anchor sleeves to concrete and masonry walls as shown or otherwise approved.

5. Sleeves through walls shall be flush with wall face.

6. Seal annular space between pipe and sleeve with mechanical seals or as approved by CONTRACTOR.

7. All pipe joints and annular spaces in exterior walls or walls subjected to hydrostatic pressure shall be completely watertight.

8. Size sleeves to provide annular space as recommended by the mechanical seal manufacturer and as follows:

Pipe Size	Spacing between Sleeve ID and Pipe Or Insulation OD
Less than 2 in.	1/2 in. to 3/4 in.
2 in. - 4 in.	3/4 in. to 1-1/4 in.
6 in. - 12 in.	1-1/4 in. to 2 in.
Over 12 in.	2 in. to 3 in.

10. Do not install sleeves and pipes through concrete and steel members unless specifically shown and approved by CONTRACTOR.

END OF SECTION 15051

SECTION 15060

SOIL VAPOR EXTRACTION SYSTEM PIPING AND APPURTENANCES

1 PART 1 GENERAL

1.1 SECTION INCLUDES

A. This Specification and all applicable specifications, Drawings, standards, and codes referenced herein shall apply to the fabrication and erection of all piping, pipe fittings, valves, supports, etc., and any prefabrication for the following systems:

1. Inlet Extraction Manifolds (VES Trailer).

2. Coaxial Vapor and Groundwater Extraction Piping (Extraction Wells to Vapor and Water Extraction Manifolds).

3. Water Discharge Piping (Water Discharge Pumps to Equalization Tank #2.)

4. Interconnecting piping through entire SVE system train (SVE Trailer).

5. Natural gas service connection (Vapor Phase Treatment System).

B. Conformance

1. All work within the scope of this Specification shall be performed in accordance with this Specification and all applicable referenced documents. No deviations shall be made from this Specification or any applicable referenced documents without prior written authorization of the Engineer for each deviation. the application for each deviation shall completely and specifically define the location of, the nature of, and the reason for the proposed deviation.

C. Specifications

1. All specifications, standards, codes, etc., referred to and designated herein, together with all addenda, revisions, and supplements, shall be considered part of this Specification. Specifications, standards, codes, etc., referred to shall be of the latest edition.

2. All materials, fabrication, assembly, testing, and inspection of the piping systems within the scope of this Specification shall be in accordance with the ANSI Code for Pressure Piping B31.3; and the Contract Piping Materials Specification.

3. All conflicts between the requirements of this Specification, related specifications, standards, purchase orders, design drawings or models shall be referred to the Engineer before proceeding with work of the affected parts.

4. Nothing in this Specification shall be interpreted as in any way relieving a Contractor of the responsibility for complete compliance with the referenced codes wherever they apply.

1.2 RELATED SECTIONS

A. Section 02225 - Trenching.

B. Section 15140 - Supports and Anchors.

C. Section 15260 - Piping Insulation.

1.3 REFERENCES

A. ANSI B31.1 - Power Piping.

B. ANSI B31.2 - Fuel Gas Piping.

C. ANSI B31.9 - Building Service Piping.

D. ANSI B16.5 - 1981 - Steel Pipe Flanges and Flanged Fittings "American Class 150, 300, 400, 600, 900, 1,500, 2,500 Steel Flange Standards".

E. ASTM A53 - Pipe, Steel, Black and Hot-Dipped Zinc Coated, Welded and Seamless.

F. ASTM A120 - Pipe, Steel, Black and Hot-Dipped Zinc Coated (Galvanized), Welded and Seamless, for Ordinary Uses.

G. ANSI B2.1 - Pipe Threads.

H. ANSI B16.3 - Malleable Iron Threaded Fittings.

I. ASTM B16.9 - Factory-Made Wrought Steel Buttwelding Fittings.

J. ASTM B16.11 - Forged Steel Fittings, Socket-Welding and Threaded.

K ASTM B16.21 - Nonmetallic Gaskets for Pipe Flanges.

L ASTM B16.25 - Buttwelding Ends.

M ASTM B31.3 - Pressure Piping Code.

N ASTM D-2146 - Polypropylene Pipe Manufacturing.

O ASTM D-2837 - Hydrostatic Design Basis for Polypropylene Pipe.

P ASTM D-4101 - Material for Polypropylene Pipe and Fittings.

Q ASME (Applicable Sections) - Welding and Brazing Qualifications.

R DIN 16962 - Dimensions and Tolerances for Polyproplylene Socket Fusion Fittings.

S ISO 7279 - Dimensions and Tolerances for Polyproplylene Socket Fusion Fittings.

1.4 SUBMITTALS

A. Submit under provisions of Section 1E4.

B. Product Data: Provide data on pipe materials, pipe fittings, valves, and accessories. Provide manufacturers catalog information. Indicate valve data and ratings.

C. Evidence of Fusion Training and Certification for polypropylene piping installation, by polypropylene piping manufacturer.

1.5 PROJECT RECORD DOCUMENTS

A. Submit under provisions of Section 1E2.

B. Record actual locations of valves.

1.6 OPERATION AND MAINTENANCE DATA

A. Submit under provisions of Section 1E3.

B. Maintenance Data: Include installation instructions, spare parts lists, exploded assembly views.

1.7 QUALITY ASSURANCE

A. Valves: Manufacturer's name and pressure rating marked on valve body.

B. Welding Materials and Procedures: Conform to ASME Code and applicable state labor regulations.

C. Welders Certification: In accordance with ASME Sec 9.

D. Maintain one copy of each document on site.

1.8 QUALIFICATIONS

A. Manufacturer: Company specializing in manufacturing the Products specified in this section with minimum three years documented experience.

B. Installer: Company specializing in performing the work of this section with minimum 3 years documented experience.

C. Polypropylene Piping Installer: Installer(s) shall be factory trained and certified for polypropylene piping installation and fusion welding.

1.9 REGULATORY REQUIREMENTS

A. Perform Work in accordance with State of Rhode Island plumbing code.

1.10 DELIVERY, STORAGE, AND HANDLING

A. Deliver, store, protect and handle products to site under provisions of Sections 1G9 and 1G17.

B. Accept valves on site in shipping containers with labelling in place. Inspect for damage.

C. Provide temporary protective coating on cast iron and steel valves.

D. Provide temporary end caps and closures on piping and fittings. Maintain in place until installation.

E. Protect piping systems from entry of foreign materials by temporary covers, completing sections of the work, and isolating parts of completed system.

1.11 ENVIRONMENTAL REQUIREMENTS

A. Do not install underground piping when bedding materials are wet or frozen.

1.13 EXTRA MATERIALS

A. Provide one (1) repacking kit for each size valve.

2 PART 2 PRODUCTS

2.1 GROUNDWATER AND VAPOR EXTRACTION SYSTEM AND WATER DISCHARGE PIPING

A. Steel Pipe: ASTM A53 or A120, Schedule 40 black (galvanized for groundwater service)

1. Fittings: ASME B16.3, malleable iron, or ASTM A234, forged steel welding type (galvanized for groundwater service).

2. Joints: NFPA 54, threaded or welded to applicable portion of ANSI B31and ASME Sec 1.

B. Grooved End Steel Pipe - black schedules 10, 40, 80 steel (as indicated on the contract drawings), ASTM, A-135 OR A-53, Grade B, 3/4 to 1-1/2" Type F and 2-24" Type E or S, or hot-dip galvanized for groundwater service.

1. Fittings: shall be Victaulic Company of America, Easton, PA., full flow cast fittings, steel fittings or segmentally welded fittings with grooves or shoulders designed to accept Victaulic grooved end couplings(designate specific style numbers).

a. Standard Fittings - Shall be cast of ductile iron conforming to ASTM A-536 (Grade 65-45-12), or malleable iron conforming to ASTM A-47, Grade 32510, painted with alkyd enamel or hot-dip galvanized to ASTM A-153 or zinc electroplated to ASTM B-633.

i. Bolted Branch Outlets shall be Victaulic Style 920 Mechanical-T.

b. Standard Segmentally Welded Fittings - Shall be fabricated of Schedule 40 carbon steel pipe as follows: 3/4 to 1-1/2" conforming to ASTM A-53, Type F; 2-10" Schedule 40 conforming to ASTM A-53 Type E or S, Grade B; 12-24" 0.375" wall conforming to ASTM A-53, Type E or S, Grade B, painted with rust inhibiting modified vinyl alkyd enamel or hot-dip galvanized to ASTM A-153.

2. Joints: grooved, prepared in accordance with (ANSI/AWWA C-606), (CSA B242-M1980), (MIL-P-11087C Grooved End Pipe) or Victaulic (manufacturer's) published specifications as appropriate according to pipe material, wall thickness, size and method of joining. In the event of conflict, Victaulic data shall prevail.

C. Polypropylene Pipe: Manufactured from a Type II copolymer meeting ASTM D-4101 in accordance with ASTM D-2146. Shall conform to requirements of DIN 8077 and ASTM D-2837.

1. Fittings: Socket fusion type in accordance with ISO 7279 and DIN 16962 dimensions and tolerances. Type I homopolymer meeting ASTM D-4101 in accordance with ASTM D-2146.

2. Joints: Heat fusion in accordance with pipe manufacturer recommendations.

D. Chemical Hose: Groundwater Extraction "Straw" shall be 1" ID Goodyear Dayco Series 7276 Poly Chem Hose. Hose shall be run continuous without joints or couplings except at termination interfaces with the extraction well foot valve and the water extraction manifold.

1. Couplings: Provide 1-5/8" OD X 1" NPTF Swaged SS couplings to interface with the extraction well foot valve and the water extraction manifold (water extraction manifold to be swiveled), by the Swagelok Co., Solon, OH, or equal.

E. Copper Tubing: ASME SB-42/SB-68 Type L: Soft.

2.2 FLANGES, UNIONS, AND COUPLINGS

A. Grooved Piping Systems

1. Couplings - shall consist of a one or more piece ductile or malleable iron cast housing, a synthetic rubber gasket of a central cavity pressure-responsive design, with nuts, bolts, locking toggle or lugs to secure unit together.

a. Coupling Housings - Shall be cast of ductile iron conforming to ASTM A 536 (Grade 65-45-12) or malleable iron conforming to ASTM A-47 (Grade 32510), hot dip galvanized to ASTM A-153, or zinc electroplated to ASTM B-633, as manufactured by Victaulic Company of America.

b. Coatings - Shall consist of an alkyd enamel paint, or hotdip galvanizing to ASTM A-153, or zinc electroplating to ASTM B-633, as specified.

c. Couplings for Grooved End Steel Pipe - Shall be Victaulic couplings for grooved end steel pipe.

d. Line and Fitting Joints - Shall be Victaulic flexible (Style 77) or rigid (Style 07), as indicated on the contract drawings.

e. Reducing Joints - Shall be Victaulic Style 750 Reducing Couplings for pipe to pipe joints or to create reducing fittings using straight fitting configurations.

f. Flanged Connections - Shall be Victaulic Style 741 (2-24") Vic-Flange adapters, engaging directly into grooved pipe and bolting directly to ANSI Class 150 steel flanged components.

g. Quick Disconnects - Shall be Victaulic Style 78 Snap-Joint Couplings or Style 780/781 for double grooved pipe.

2. Gaskets - shall be molded of synthetic rubber in a central cavity, pressure-responsive configuration conforming to the pipe outside diameter and coupling housing, of elastomers having properties as designated in ASTM D-2000. Reference shall always be made to the latest published Selection Guide for Victaulic Gaskets for proper gasket selection for the intended service.

a. Special Chemical Service (grooved piping handling extraction well vapor and groundwater (including water discharge piping) - gasket supplied for special chemical services from +20°F to +300°F, shall be a Grade "O" fluoroelastomer (Viton) compound, with blue color code, molded of materials conforming to ASTM D-2000, designation 2HK714A110B27EF31Z, recommended for many oxidizing acids, petroleum oils, halogenated hydrocarbons, lubricants, hydraulic fluids, organic liquids and air with hydrocarbons to +300°F.

b. Vacuum Service - Gasket supplied for vacuum service shall be Victaulic Flush-Seal® style or standard gaskets with internal metal liner.

3. Fasteners

a. Bolts and Nuts - Bolts and nuts shall be heat treated carbon steel, track head, conforming to physical properties of ASTM A-183 minimum tensile 110,000 psi, black, or zinc electroplated to ASTM B-633.

b. Other Fasteners - Fasteners for certain products may vary from this specification, as noted with each project.

B. Pipe Size 2 Inches (50 mm) and Under:

1. Ferrous pipe: 150 psig (1 034 kPa) malleable iron threaded unions (galvanized for water service).

C. Pipe Size Over 2 Inches (50 mm):

1. Ferrous pipe: 150 psig (1 034 kPa) forged steel slip-on flanges; 1/16 inch (1.6 mm) thick preformed neoprene gaskets.

D. Dielectric Connections: Union with galvanized or plated steel threaded end, copper solder end, water impervious isolation barrier.

2.3 GLOBE VALVES

A. Eng. Tag HV-060

Up to and including 2 Inches (50 mm): Bronze body, bronze trim, rising stem, handwheel, inside screw, renewable composition disc, screwed ends, with back seating capacity (repackable under pressure).

2.4 BALL VALVES

A. Eng. Tags HV-046A-F, 047, 048, 049, 050, 054, 055, 056, 057, 058, 059, 061, 062, 063, 075, 076

Up to and including 2 Inches (50 mm): Bronze body, chrome plated steel ball, teflon seats and stuffing box ring, lever handle and balancing stops, threaded ends. Water Extraction Ball Valves shall be rated to no less then 29" HG Vacuum as required for intended service.

Manufacturer/Model: Apollo (Division of Conbraco Industries, Inc., Pageland, S.C.) 70-100 Series 101-108, or equal.

2.9 BUTTERFLY VALVES (Manual Operator)

A. Eng. Tags 051(Manual On/Off), HV-045A-F, 052, 053(Manual Infinite Positioning)

Up to and including 6 Inches (152 mm): Wafer style, angle disc style, full circle sealing between disc and seat, bubble tight shutoff, blowout-proof shaft, complete with manual lever operator, infinite positioning. Shall be rated to no less then 15" HG Vacuum as required for intended service. Cast iron body, aluminum bronze disc, 316 SS shaft, aluminum bronze seat, manual on/off or manual infinite positioning operator.

Manufacturer/Model: Norriseal, Houston, TX,

6" On/Off - M1010-423B-1A
3" or 6" Infinite Positioning - M1010-423B-1E

2.10 MOTOR ACTUATED BUTTERFLY VALVES

A. Vapor Extraction Manifold: Eng. Tags 051 FV-012A-F

3 Inches (152 mm): Wafer style, angle disc style, full circle sealing between disc and seat, bubble tight shutoff, blowout-proof shaft, complete with manual lever

operator, infinite positioning. Shall be rated to no less then 15" HG Vacuum as required for intended service. Cast iron body, aluminum bronze disc, 316 SS shaft, aluminum bronze seat. Valves provided with reversing electric operator with NEMA 7, explosion-proof capability.

Manufacturer/Model: Norriseal(Houston, TX), 3" valve with El-O-Matic(Hackensack, NJ) Electric Operator, complete model No.:

3" M1010-423B-EL-35-XP

B. Dilution Air Manifold: Eng. Tag FV-014

Vendor supplied, refer to Section 11350 Vapor Phase Treatment System

2.11 SOLENOID ACTUATED VALVES

A. Eng. Tag SV-011A-F, 030, 033

Provide 1", two (2) way, normally closed, aluminum body, viton seals and discs, 305 S.S. core tube, 430F S.S. core and plugnut, 302 s.s. springs, copper shading coil, acetal core guide and Teflon filled rider ring. Nominal ambient temperature ranges (32^0 F to 125^0 F). Combination explosion proof and raintight enclosure, 120 volts, AC, 60 Hz. Coil shall be continuous duty molded Class F. Shall be mounted with solenoid vertical and upright. Shall be rated to 29" HG Vacuum service Minimum.

Manufacturer: ASCO(Automatic Switch Co.), Florham Park, NJ.

2.12 CHECK VALVES

A. Spring Loaded: Eng. Tags FV-065, 066, 067, 068, 070, 073, 077

Brass body, SS spring, bronze piston bubble-tight shutoff, 1/2 psi cracking pressure, with viton seals and screwed ends. Valves shall be rated for no less then 29 " HG vacuum service.

Manufacturer: Conbraco Industries, or equal.

B. Swing Check: Eng. Tags FV-011-A-F

Bronze body and disc with viton seals and screwed ends. Valves shall be rated for no less then 29 " HG vacuum service.

C. Wafer Check: Eng. Tag FV-071

6" wafer style 125 flange class, aluminum body and internals with viton seals and 304 SS spring.

Manufacturer/Model: Technochek Style 5412-6"

2.13 EXTRACTION WELL FOOT VALVE

A. Eng. Tags FV-074A-F

Shall be 1" nominal size, stainless steel body, viton check sleeve material (duck bill style), threaded stainless steel end connections. 100% shutoff on flow reversal.

Manufacturer/Model: Red Valve Company, Inc., Series 2633, In-Line check Valve.

2.14 PRESSURE RELIEF/BY-PASS CONTROL VALVES

A. Eng. Tag PCV-043

Bronze body, teflon seat, steel stem and springs and/or diaphragm compatible with 1%Toluene, automatic, direct pressure actuated, and field adjustable.

Manufacturer: Watts Industrial Products, or equal.

2.15 VACUUM RELIEF SAFETY VALVES

A. Eng. Tag PCV-013

Provide M-D Pneumatics 3" threaded connection adjustable setting vacuum relief valve, model NO. 1362-8. Connect to dilution air piping utilizing bell reducers, provide unions or other means to allow for future removal. Initial relief setting shall be 10.5"HG vacuum.

B. Eng. Tag PCV-044

Provide GAST Manufacturing Corp., Benton Harbor, MI, 3/8" threaded connection adjustable setting vacuum relief valve, model No. AA840A. Initial relief setting shall be 28" HG vacuum.

3 PART 3 EXECUTION

3.1 EXAMINATION

A. Verify excavations under provisions of Section 01041.

B. Verify that excavations are to required grade, dry, and not over-excavated.

3.2 PREPARATION

A. Ream pipe and tube ends. Remove burrs. [Bevel plain end ferrous pipe.]

B. Remove scale and dirt, on inside and outside, before assembly.

C. Prepare piping connections to equipment with flanges or unions.

3.3 INSTALLATION

A. Install in accordance with manufacturer's instructions.

B. Provide non-conducting dielectric connections wherever jointing dissimilar metals.

C. Route piping in orderly manner and maintain gradient.

D. Install piping to conserve building space and not interfere with use of space.

E. Group piping whenever practical at common elevations.

F. Install piping to allow for expansion and contraction without stressing pipe, joints, or connected equipment.

G. Provide clearance for installation of insulation and access to valves and fittings.

H. Provide access where valves and fittings are not exposed.

I. Establish elevations of buried piping outside the building to ensure cover of not less than the minimum frost depth in the project area.

J. Where pipe support members are welded to structural building framing, scrape, brush clean, and apply one coat of zinc rich primer to welding.

K. Support for utility meters shall be provided by Providence Gas Company.

L. Prepare pipe, fittings, supports, and accessories (not prefinished), ready for finish painting.

M. Excavate in accordance with Section 02225 for work in this Section.

N. Backfill in accordance with Section 02225 for work of this Section.

O. Install bell and spigot pipe with bell end upstream.

P. Install valves with stems upright or horizontal, not inverted.

3.4 APPLICATION

A. Use grooved mechanical couplings and fasteners only in accessible locations.

B. Install unions downstream or grooved fittings both up and downstream of valves and at equipment or apparatus connections .

C. Install brass male adapters each side of valves in copper piped system. Sweat solder adapters to pipe.

D. Install ball valves for shut-off and to isolate equipment, part of systems, or vertical risers or as otherwise indicated on the contract drawings.

E. Install globe or butterfly valves for throttling, bypass, or manual flow control services or as otherwise indicated on the contract drawings.

F. Provide spring loaded check valves on discharge of water discharge pumps.

G. Provide plug valves in Natural Gas System for shut-off service.

3.5 ERECTION TOLERANCES

A. Establish invert elevations, slopes for vapor extraction pipe condensate drainage to 1/8 inch per foot (1 percent) minimum, towards extraction wells. Maintain gradients.

B. Slope water piping and arrange to drain at low points.

3.6 DISINFECTION OF WATER SERVICE PIPING SYSTEM

A. Prior to starting work, verify system is complete, flushed and clean.

B. Ensure PH of water to be treated is between 7.4 and 7.6 by adding alkali (caustic soda or soda ash) or acid (hydrochloric).

C. Inject disinfectant, free chlorine in liquid, powder, tablet or gas form, throughout system to obtain 50 to 80 mg/L residual.

D. Bleed water from outlets to ensure distribution and test for disinfectant residual at minimum 15 percent of outlets.

E. Maintain disinfectant in system for 24 hours.

F. If final disinfectant residual tests less than 25 mg/L, repeat treatment.

G. Flush disinfectant from system until residual equal to that of incoming water or 1.0 mg/L.

H. Take samples no sooner than 24 hours after flushing, from 2 percent of outlets and from water entry, and analyze in accordance with AWWA C651.

3.7 SERVICE CONNECTIONS

A. Provide new gas service piping from gas meter, corrector and regulators (provided by Providence Gas Co.) to gas cock provided with the vapor phase treatment unit, in accordance with local Fire Marshal requirements.

END OF SECTION

SECTION 15080
PIPING SMALLER THAN 4 INCHES IN DIAMETER

PART 1 - GENERAL

1.1 DESCRIPTION

A. Furnish and install.

1.2 GENERAL

A. In general, schematic diagrams for the small piping systems are shown on the Drawings. It is the intention of the Drawings and of these Specifications that CONTRACTOR shall provide complete and workable small piping systems and any miscellaneous valves and fittings required for proper completion of the work shall be considered as having been included.

B. The Drawings show the general layout of small piping diagrammatically and do not necessarily reflect the exact location of the various items. Accordingly, CONTRACTOR should not scale the Drawings but shall acquaint himself fully with the extent and character of the work required and its relation to the work under other sections.

C. All bolts, nuts, gaskets, wall sleeves, hangers, brackets, and other supports required for piping and equipment furnished under this Section shall be provided by CONTRACTOR.

D. The piping schedule for all pipe is included at the end of Section 15090.

1.2 QUALITY ASSURANCE

A. Reference Standards: Comply with applicable provisions and recommendations of the standards listed hereinafter under Item 2.3 MATERIALS".

PART 2 PRODUCTS

2.1 GENERAL REQUIREMENTS

A. Tapped holes or tee fittings shall be provided in piping where required for connection of gages, switches, sample lines, and similar items. Where wall thickness is insufficient for the tap size required, a boss, tee or tapping saddle shall be provided.

2.2 PIPING SCHEDULE

A. Polyvinyl Chloride (PVC) Pipe: NaOH, H_2O_2 and polymer transfer piping system.

B. Kynar (PVDF) Pipe: H_2SO_4 Acid Transfer piping system.

C. Steel Pipe: Compressed Air Supply Header, Sludge Transfer and Selected Groundwater Transfer.

2.3 MATERIALS

A. Polyvinyl Chloride (PVC) Pipe: PVC pipe shall meet ASTM D-1784. Thickness Class shall be Schedule 80. All special sections and fittings shall be made with component parts having the dimensions. ends, and other details as shown and specified. All fittings shall have the same minimum wall thickness as the pipe. Each piece of pipe and all fittings shall be completely cleaned before installation.

B. PVDF pipe shall meet ASTM D-1434 Thickness Class shall be Schedule 80. All special sections and fittings shall be made with component parts having the dimensions, ends, and other details as shown and specified. All fittings shall have the same minimum wall thickness as the pipe. Each piece of pipe and all fitting shall be completely cleaned before installation.

C. Compressed Air Supply Header Pipe: Steel, schedule 80, threaded.

D. Sludge/Groundwater Transfer: Steel, schedule 80, flanged, 150#.

2.4 MANUFACTURERS

A. Polyvinyl Chloride (PVC) & Kynar (PVDF) Piping:

1. Plastic Engineered Products, Inc.

2. Or equal.

PART 3 EXECUTION

3.1 INSTALLATION

A. CONTRACTOR shall take special care in the arrangement of piping secure a neat and workmanlike appearance and true alignment and grade. All pipe and fittings shall be thoroughly cleaned before erection, and all burrs, scale, fins and obstructions shall be

moved. The CONTRACTOR shall make ample provision to allow for expansion of piping without undue strain.

B. All piping shall be assembled accurately from measurements established at the job site and worked into place without springing or forcing.

C. All drain lines shall slope a minimum of one (1) percent in the direction of flow unless otherwise noted.

D. Bolts, nuts, gaskets and studs for all pipe materials shall be provided as required, and shall conform to the applicable requirements of Section 15090 - "PIPING 4 INCHES IN DIAMETER AND LARGER".

E. Piping supports, guides and anchors shall be provided for the piping as otherwise required, and shall conform to the applicable requirements of Section 15090 - "PIPING 4 INCHES IN DIAMETER AND LARGER".

F. Valves shall be installed, in accordance with the manufacturer's specifications.

G. The exterior of exposed pipe, shall receive surface preparation and field painting in accordance with the requirements of Section 09900, Painting.

3.2 TESTING OF PRESSURE PIPING

A. Refer to Section 15090.

END OF SECTION 15080

SECTION 15085
VALVES AND SPECIALS SMALLER THAN 4 INCHES IN DIAMETER

PART 1 GENERAL

1.1 SECTION INCLUDES

A. Furnish and install valves and specials for piping smaller than 4 inches in diameter. or as otherwise required.

1.2 QUALITY ASSURANCE

A. Reference Standards: CONTRACTOR shall comply with applicable provisions and recommendations of the standards listed hereinafter under Article 2.1.

PART 2 PRODUCTS

2.1 MATERIALS

A. PVC Ball Valves:

1. Body: PVC, true union, w/socket fittings, Sch 80.
2. Drive Shaft: stainless steel.
3. Ball: PVC.
4. Seals: Teflon.
5. O-ring: Teflon.

B. PVDF Ball Valves:

1. Body: PVDF, true union ball valve w/socket fusion fitting.
2. Drive shaft: Stainless steel.
3. Ball: PVDF.
4. Seals: Teflon.

5. O-ring: Teflon.

C. PVC Quick Disconnects:

1. Body: PVC.

2. Cam Arms: 316 stainless steel.

3. Gasket: Teflon.

4. Ends:

a. Female: Socket.

b. Male: Hose Shank.

D. PVDF Quick Disconnects:

1. Body: PVDF

2. Cam Arms: 316 Stainless Steel

3. Gaskets: Teflon

4. Ends:

a. Femal: Socker

b. Male: Hose shank

E. Plug Valves:

1. Body: PVC

2. Drive Shaft: Stainless Steel

3. Plug: Teflon

4. Seals: Teflon

F. Carbon Steel Ball Valves:

1. Body: Carbon Steel

2. Drive Shaft: Stainless Steel

3. Seals: Teflon

4. O-Ring: Teflon

G. Check Valves:

1. Body: PVC, Flanged

2. Seal: Viron

3. Spring: Stainless Steel

4. Plate: PVC

2.2 MANUFACTURERS

A. PVC, PVDF Ball Valves, Plug Valves and Quick Disconnects.

1. Plastic Engineered Products, Inc.

PART 3 EXECUTION

3.1 VALVES AND SPECIALS

A. CONTRACTOR shall install all valves and specials in a neat and workmanlike manner. Heavy units shall be handled by mechanical equipment. Valves or specials which are inadvertently dropped or otherwise damaged prior to OWNER'S representative's final certificate shall be checked by a representative of the manufacturer and replaced or repaired, if required, at CONTRACTOR'S expense.

END OF SECTION 15085

SECTION 15090
PIPING 4 INCHES IN DIAMETER AND LARGER

PART 1 GENERAL

1.1 SECTION INCLUDES

A. Furnish and install all piping 4 inches in diameter and larger for the Groundwater Pretreatment System.

1.2 QUALITY ASSURANCE

A. Reference Standards: CONTRACTOR shall comply with applicable provisions and recommendations of the standards listed hereinafter under 2.1 - "MATERIAL".

PART 2 PRODUCTS

2.1 MATERIALS

A. Ductile Iron Pipe and Fittings:

1. Pipe:

a. Non-Flanged Pipe: Conform to AWWA C150 and C151 for material, thickness, dimensions, tolerances, tests, marking and other requirements.

1) Thickness: Ductile iron pipe and fittings shall be minimum Class 53.

2. Joints:

a. Mechanical Joints: Conform to AWWA C111.

1) Gaskets: Plain tip.

2) Bolts and Nuts: High strength, low alloy steel.

b. Push-On Joints: Conform to AWWA C111.

1) Gaskets: Molded rubber.

2) Strips: Each plain end shall be painted with a circular stripe such that it provides a guide for visual check to determine when the joint is properly assembled.

B. Pipe and Fittings:

1. Pipe, fittings, and couplings shall be of ductile iron.

2. Pipe and fittings shall be furnished with gaskets and bolts. The gaskets shall be teflon ring type, a minimum of 1/8 inch thick, or as required to insure a connection free of leaks at the test pressure. Bolts shall be constructed of stainless steel.

3. Watertight seals between pipe and fitting threads, and flange threads shall be attained by use of a high temperature heat resistant sealing compound. The sealing compound shall be capable of withstanding a minimum firing temperature of 1600 F.

C. PVC Pipe:

1. PVC pipe shall meet ASTM D 1784 thickness class shall be Schedule 80. All special sections and fittings shall be made with components parts having the dimensions, ends and other details as shown and specified. All fittings shall have the same minimum thickness as the pipe. Each piece of pipe and all fittings shall be completely cleaned before installation.

2.2 MANUFACTURERS

A. The Ductile Iron pipe and fittings shall be by:

1. McWone, Inc.

2. Or equal.

B. PVC Pipe and Fittings shall be by:

1. Plastic Engineered shall be by:

2. Or equal.

PART 3 EXECUTION

3.1 PIPE SLEEVES

A. Where other than cast iron or ductile cast iron pipes pass through building floors, walls, inside partitions or furrings, pipe thimbles, made of 24 gage galvanized steel 3/4-inch larger in diameter than the outside of the pipe for which they are intended, shall be

provided and set in place as grout is installed. Sleeves below grade or through walls of liquid or sludge containing structures shall be cast iron or wrought iron and shall be packed with oakum and lead, and calked watertight. In lieu of calking, the CONTRACTOR may utilize an interlocking modular seal system such as Link-Seal, as manufactured by the Thunderline Corporation, or equal.

B. Sleeves shall be fastened securely in floors and walls so that they will not be displaced when grouted.

C. Wall sleeves shall finish flush with finish lines. Floor sleeves not in liquid or sludge containing structures shall be set with bottom flush with finished construction below, and with the top extending 3/4 inch above finished floor. All piping passing through wall or floor sleeves shall be calked watertight.

D. Ceiling, floor and wall escutcheon plates shall be provided for pipes passing through ceilings, floors and walls in exposed areas.

3.2 INSTALLATION

A. General: All pipe and fittings shall be placed to the lines and grades shown on the Drawings. All joints shall be clean and shall be made as specified hereinafter. The pipe shall be installed in accordance with the recommendations of the manufacturers.

B. Taps in Pipe: Taps in piping shall be made for the connection of equipment, gages, and wherever shown on the Drawings or required. The taps may be made either in the shop or in the field. Taps shall be made to the minimum thread length required under ANS B16.1. In cast iron or ductile iron pipe, cast bosses shall be provided should the thickness of the pipe or fittings be less than that required.

C. Bolts, Nuts, Gaskets, and Studs:

1. All bolts, nuts, studs, gaskets, and other materials necessary for installation of the piping and valves shall be furnished as required.

D. Pipe Supports:

1. PVC coated pipe supports and hangers shall include pipe hangers, supports, struts, structural members, brackets, plates, anchors and other supports. Acceptable pipe hangers, supports, and brackets shall be provided as necessary for adequate support of all piping. CONTRACTOR shall provide supports of adequate size and strength to support the weight of pipe and liquid and any anticipated thrust.

2. Sizes, weights, anticipated loadings and fabrication details of all supports, be they angers, brackets, struts, structural members, and the like, shall be submitted for review by ENGINEER, but final responsibility for the adequacy of the supports furnished shall remain with CONTRACTOR. In general, pipe supports are not shown on the Drawings, but shall be supplied as specified herein. However, any support details shown on the Drawings shall be followed.

3. Schedule of Pipe Supports:

Pipe	Guide Spacing (ft)	Anchor (Location)
1" PVC/PVDF	3	At all bends
6" PVC	4	At all bends
4" PVC	4	At all bends
1" Steel	6	At all bends

4. The maximum distance between supports for non-PVC piping systems shall be 8 feet for pipe up to 6 inches in diameter, and 10 feet for pipe 6 inches in diameter and larger.

5. All piping suspended from pipe hangers shall be braced as required to eliminate sway in any direction. The rigidity of all suspended piping is subject to the approval of OWNER's representative.

6. Bolts, nuts and straps where shown or required for pipe support fasteners shall be of galvanized steel. All anchor bolts and nuts and other fasteners furnished for connection of the pipe supports to concrete structures shall be of Type 304 stainless steel. Anchorage items shall conform to the applicable requirements of Section 05505.

7. Pipe stanchion saddle supports shall be of cast iron, with adjustable construction.

3.3 TESTING OF PRESSURE PIPING

A. General:

1. Test all piping as specified below unless otherwise authorized by ENGINEER.

2. Notify 48 hours in advance of testing.

3. Provide all testing apparatus including pumps, hoses, gages, and fittings.

4. Pipelines shall hold the specified test pressure for a period of two hours.

5. Pipelines which fail to hold specified test pressures or which exceed the allowable leakage rate shall be repaired and tested.

6. Test pressures required are at the lowest elevation of the pipeline section being tested, unless otherwise specified.

7. Unless otherwise approved, conduct all tests in the presence of CONTRACTOR. Repeat tests in the presence of local authorities having jurisdiction if required by them.

B. Schedule of Pipeline Tests:

1. All piping shall be tested at 50 psig with water for a two (2) hour period.

C. Pressure Test Procedure:

1. Insure that all supports and restraint protection are securely in place.

2. Fill section to be tested slowly with water and expel all air. Install cocks, if necessary, to ensure removal of air.

3. Test only one section of pipe at a time.

4. Apply test pressure required for two hours an observe pressure gage. check carefully for leaks while test pressure is being maintained.

D. Leakage Test Procedure:

1. Conduct leakage test for all liquid piping after satisfactory completion of pressure test.

2. Maintain test pressure constantly for a 2-hour period and accurately measure the amount of water which must be added to maintain the test pressure.

3. Allowable Leakage Rates (in gallons per hour per 1,000 feet per inch diameter):

a. Ductile Iron Pipe: 0.075.

b. Copper, Plastic, and All Other Piping: No leakage permitted.

Piping Schedule

Groundwater Pretreatment System:

Location	Size (in.)	Material	Type
Hydrogen Peroxide/ polymer Transfer System	1	CPVC	Socket-weld/threaded
Caustic Transfer System	1	CPVC	Socket-weld/threaded
Acid Transfer System	1	PVDF	Socket-weld/threaded
Compressed Air Supply Header	1	Steel	Threaded
Groundwater Transfer Piping	2 to 8	Steel	Flanged, 125#
Sludge Wasting/Recycle/Transfer	2	Steel	Flanged, 125#
Sandfilter Reject Water	2	CPVC	Socket-weld
Final Effluent (Buried)	6	Ductile Iron	Mechanical Joint

END OF SECTION 15090

SECTION 15095
VALVES AND SPECIALS 4 INCHES IN DIAMETER AND LARGER

PART 1 GENERAL

1.1 SCHEDULE INCLUDES

A. Furnish and install valves and specials for the large diameter piping systems 4 Inches in Diameter and Larger.

1.2 QUALITY ASSURANCE

A. Reference Standards: CONTRACTOR shall comply with applicable provisions and recommendations of the standards listed hereinafter under Article 2.1.

PART 2 PRODUCTS

2.1 MATERIALS

A. Butterfly Valves:

1. Type: Manual.

2. Bodies: Short laying length type with flanged ends conforming to ANSI B16.1, Class 125. They shall be PVC with integrally hubs for shaft bearings.

3. Discs: PVC.

4. Shafts: Stainless steel, securely attached to the valve disc. Diameter of the valve shafts and the connections to the valve disc shall be suitable for the service conditions specified.

5. Seats: Teflon-lined gasket mounted in the valve body or on the disk and together with the mating-seat surface and mechanism shall be designed to provide tight shutoff at differential pressures as stated herein. Mating seats shall be Type 316 stainless steel.

6. Shaft Bearings: Self-lubricating woven teflon sleeve type. Thrust bearings shall keep the disc centered regardless of valve position.

7. Shaft Seals: Standard split-V type packing, standard "O" ring sealed or pull-down packing gland, complying with the requirements of AWWA C504.

B. Check Valves:

1. Body PVC: Flanged.

2. Seal: Viton.

3. Spring: Stainless steel.

4. Plate: PVC.

2.2 MANUFACTURERS

A. Butterfly Valves:

1. Henry Pratt Company.

2. Or equal.

PART 3 EXECUTION

3.1 VALVES AND SPECIALS

A. CONTRACTOR shall install all valves and specials in a neat and workmanlike manner. Heavy units shall be handled by mechanical equipment. Valves or specials which are inadvertently dropped or otherwise damaged prior to OWNER's representative's final certificate shall be checked by a representative of the manufacturer and replaced or repaired, if required, at CONTRACTOR's expense.

END OF SECTION 15095

SECTION 15120
GAS PIPING SYSTEM

PART 1 GENERAL

1.1 SECTION INCLUDES

A. Furnish and install a complete and workable system of natural gas piping including all piping, valves, regulators, metering equipment and accessories.

B. Work Installed but Furnished by Others:

1. Coordinate piping, meter and regulator requirements with the local gas utility company. Furnish and install piping, meter rig including regulators, shut-off cocks, meter bars as required by the utility company.

1.2 RELATED SECTIONS

1. Section 15051, Wall Pipes and Sleeves.

2. Section 15140, Pipe Hangers Supports and Restraints.

1.3 QUALITY ASSURANCE

A. Requirements of Regulatory Agencies:

1. Building Codes: Comply with applicable requirements of all governing authorities and the following codes:

a. Rhode Island State Uniform Fire Prevention and Building Code.

2. Permits: SUB-CONTRACTOR shall obtain and pay for all required permits, fees and inspections.

B. Reference Standards: Comply with applicable provisions and recommendations of the following except as otherwise shown or specified:

1. ANSI A13.1, Identification of Piping Systems.

2. ANSI B16.3, Malleable-iron Screwed Fittings, 150 and 300 pound.

3. ANSI B16.9, Factory Made Wrought Steel Buttwelding Fittings.

4. ANSI B16.22, Wrought Copper and Bronze Solder-Joint Pressure Fittings.

5. ANSI B125.2, Black and Hot-Dipped Zinc-Coated (Galvanized) Welded and Seamless Pipe for Ordinary Uses, (ASTM A 120).

6. ANSI H23.1, Seamless Copper Water Tube, (ASTM B 88).

7. ASTM B 32, Solder Metal.

8. FS O-F-506B, Flux, Soldering: Past and Liquid.

9. FS WW-U-531C, Unions, Pipe; Steel or Malleable Iron; Threaded Connection.

10. FS WW-U-516, Unions, Brass or Bronze; 250 pound.

11. ANSI Z223.1, National Fuel Gas Code (NFPA No. 54).

12. ANSI B36.10 Welded and Seamless Wrought Steel Pipe.

13. ANSI B2.1 Pipe Threads (except Dryseal).

C. Welder Qualification:

1. Provide welding performed by welders qualified to perform welding in accordance with ANSI B31.1, Paragraph 127.5 and AWS standards for ship and project site welding of piping work. Submit proof of qualifications.

2. Perform welding in accordance with procedures in ANSI B31.1, Paragraph 127.5.

1.4 SUBMITTALS

A. Shop Drawings: Submit for approval the following:

1. Manufacturers literature, specifications and engineering data including, dimensions, size and material of the following:

A. Pipe and Fittings.

B. Valves.

C. Regulators.

D. Meters.

2. Drawings on a 1/4-inch scale showing materials and dimensions of the complete piping system, in plan and in section.

B. Record Drawings: During progress of the Work, keep an up to date set of drawings showing field and Shop Drawing modifications. Immediately upon completion of piping Work, submit cloth or mylar tracings showing the actual in-place installation of all piping and equipment installed under this Section, at a scale satisfactory to OWNER. The Drawings shall show all piping on plans and in sections, with all reference dimensions and elevations required for complete "record" drawings of the piping systems. Two paper prints shall also be furnished. The tracings shall be furnished not later than 30 days after completion of the Contract and prior to final payment.

1.5 JOB CONDITIONS

A. Protection: Properly plug or cap the open ends of all pipe at the end of each days work or other stopping point throughout construction. Equipment shall be tightly covered and protected against dirt, water and chemical or mechanical damage.

PART 2 PRODUCTS

2.1 MATERIALS

A. Steel Pipe:

1. Pipe:

a. Reference: ANSI B125.2 and ANSI B36.10

b. Weight: Schedule 40 and Schedule 80.

c. Finish:

1) Schedule 40: Black.

2) Schedule 80: Coated with coal tar primer, 2 coats of pipe line enamel, tar impregnated felt wrapper and Kraft paper with protective clear polyethylene envelope cover.

d. End Connections:

1) Schedule 40: Threaded (ANSI B2.1)

2) Schedule 80: Welded end (API 1104, ASME Section IX Boiler and Pressure Vessel Code).

2. Fittings:

a. Threaded:

1) Reference: ANSI B16.33, 50 pound.

2) Material: Malleable iron.

3) Finish: Black.

3. Unions:

a. Threaded: Malleable iron, FS WW-U-531, Class 1, Type B.

4. Joint Compound:

a. Material: Resistant to the action of liquified petroleum gas or natural gas.

5. Insulating couplings, Dresser, a steel body with gaskets and retainer cups.

6. Coatings: Factory or manually applied as follows:

a. Primer: Coal tar, 1.3 mil coat.

1) Manufacturer: Provide products of one of the following:

a) Koppers, Bitumastic 70-B Hi-melt, CE grade enamel.

b) Reilly, "Kaiser' Hot Service Enamel.

c) Or equal.

B. Lubricated Plug Valves:

1. Manufacturer: Provide products of one of the following:

a. Walworth Company

b. Rockwell International Company, Nordstrom Valve Division.

c. Or equal.

2. Type: Short pattern, wrench operated.

3. Pressure rating: 175 lb wog - 350 lb test.

4. End connections: Threaded.

5. Construction: Cast iron body and plug with steel trim.

6. Sealant: Suitable for gas application.

7. Wrench: To suit valve.

C. Lubricated Stop Cocks (1/2"-2"):

1. Manufacturer: Provide products of one of the following:

a. Eclipse Fuel Engineering Company.

b. A.Y. McDonald Manufacturing Company.

2. Type: Flat head.

3. Pressure rating: 125 lb wog.

4. End Connections: Threaded

5. Construction: Iron body, bronze plug.

D. Natural Gas Pressure Regulator:

1. Manufacturer: Provide products of one of the following:

a. Rockwell International

b. Robert Shaw Controls.

c. Or equal.

2. Type: Service for outside installation.

3. Pressure rating: Maximum inlet pressure 125 psi.

4. Outlet pressure range: 8-inches water column.

5. Capacity in scfh: 600 scfh.

E. Dielectric Couplings:

1. Manufacturer: Provide products of one of the following:

a. Epco Sales Incorporated.

b. Watts Regulator Company.

c. Or equal.

2 Type: Union.

PART 3 EXECUTION

3.1 INSTALLATION

A. Installation of piping shall be in accordance with Section 15090.

B. Unions shall be provided for all screwed piping at connections to equipment and at convenient locations to permit disassembly of piping.

C. All connections between ferrous and non-ferrous piping materials shall be made with dielectric couplings.

D. Wherever changes in sizes of piping occur, changes shall be made with reducing fittings. The use of bushings is not permitted unless otherwise shown.

E. All pipes passing through ceilings and walls in finished rooms shall have escutcheon plates.

F. All underground piping shall be coated with 2 coats of coal tar enamel.

G. All underground service piping shall be installed with a minimum cover of 2 foot-6 inches.

H. All joints are to be welded except that "Dresser" type connections shall be used at drip pots and valves. Provide an 8 gauge, copper, bonding wire brazed to pipe on both sides of the "Dresser" fitting.

I. Gas service lines shall pitch away from building, where possible. If they are pitched toward the building they shall be provided with drip leg and plugged outlet or drip pot as required.

J. All gas piping in building shall be straight, free from traps and unnecessary bends and conform to building construction. Piping shall be graded 1-inch in 40 feet to provided for drainage of moisture, by 12-inch drip legs in accessible locations at low points of system. Branch connections to mains shall be from top of main or at a 45° angle.

K. All underground piping exposed joints, fittings and damages or defective coatings shall be repaired or covered as follows:

1. Kraft paper outer wrap, where present, shall be removed at least six inches form the area to be coated.

2. All charred and damaged coating shall be cut away by means of a drawknife, machete or other approved means, enough coating shall be cut away so as to expose grey, unrusted metal and to leave a beveled coating edge around the pipe.

3. All exposed metal surfaces shall be cleaned by machine wire brush. For pipe not mill coated with coal tar, abrade the mill coating to be overlapped using sandpaper or a wire brush and remove all mill coating adhesive from the surface to be coated. Wash entire surface to be coated with cleaning solvent (or detergent) and wipe dry with clean cloths.

4. Prime the bare metal and four inches of adjacent mill coating. Allow the primer to thoroughly dry before the enamel is applied.

5. Strips of felt shall be cut long enough to go around the pipe and overlap it by 4 to 6 inches. Using the felt strips as slings, enamel shall be poured onto the surface of the pipe and felt, and spread to at least 1/32-inch thickness over the area to be coated by the "Ragging Method." The felt sling shall be discarded after the first coat of enamel.

6. The enamel shall be inspected for voids, thin spots, sags, wrinkles and other defects. Defects shall be corrected before the application of the second coat.

7. A second coat of enamel, at least 1/32-inch thick shall be applied over the first coat using new strips of felt. The second enamel coat with a felt wrapper shall extend over the area using coated and overlap previously applied mill coatings by at least four inches.

8. Excess enamel shall be evident along all felt edges to get good sealing properties.

9. The inside page of all felt strips shall be sealed with enamel to keep out moisture.

10. The field coating shall be inspected by the coating applicator with an approved holiday detector with a peak voltage of 12,000 to 15,000 volts.

3.2 MATERIAL SCHEDULE

A. All exposed gas piping within the interior of a building or run within a chase or shaft shall be Schedule 40 black steel.

B. All gas service piping located under ground shall be in accordance with the requirements of the gas service company or as a minimum welded Schedule 80 black steel pipe with coating and paper mill wrap and polyethylene envelope protective cover.

3.3 FIELD QUALITY CONTROL

A. Tests: Pressure test all systems in conformance with Section 15090.

END OF SECTION 15120

SECTION 15140

SUPPORTS AND ANCHORS

PART 1 GENERAL

1.1 SECTION INCLUDES

A. Pipe and equipment hangers and supports.

B. Equipment bases and supports.

C. Sleeves and seals.

D. Flashing and sealing equipment and pipe stacks.

1.2 RELATED SECTIONS

A. Section 15060 - Piping and Appurtenances.

B. Section 15260 - Piping Insulation.

1.3 REFERENCES

A. ASME B31.1 - Power Piping

B. ASME B31.9 - Building Services Piping

C. ASTM F708 - Design and Installation of Rigid Pipe Hangers.

D. MSS SP58 - Pipe Hangers and Supports - Materials, Design and Manufacturer.

E. MSS SP69 - Pipe Hangers and Supports - Selection and Application.

F. MSS SP89 - Pipe Hangers and Supports - Fabrication and Installation Practices.

1.4 SUBMITTALS

A. Submit under provisions of Section 01300.

B. Shop Drawings: Indicate system layout with location and detail of trapeze hangers.

C. Product Data: Provide manufacturers catalog data including load capacity.

D. Design Data: Indicate load carrying capacities (vertical, horizontal, axial) of pipe support posts, channel/strap systems and hangers for single and multiple pipe gang runs and risers.

E. Manufacturer's Installation Instructions: Indicate special procedures and assembly of components.

1.5 REGULATORY REQUIREMENTS

A. Conform to applicable local building code for support of plumbing piping.

PART 2 PRODUCTS

2.1 PIPE HANGERS AND SUPPORTS

A. VES Piping - Groundwater and Vapor.

1. Conform to ASME B31.9.

2. Ground Support for 2 Inch Groundwater Discharge Piping: Steel channel adjustable system with compatible hardware and pipe straps. Channels fastened to pre-cast concrete bases horizontally secured as shown on the Contract Drawings.

3. Wall Support for 2 Inch Groundwater Discharge Piping: Steel channel adjustable system with compatible hardware and pipe straps. Channels fastened to existing masonry wall with masonry anchor bolt system as shown on the Contract Drawings.

4. Ground Support for 4"x1" coaxial extraction well piping: Steel channel adjustable system with compatible hardware and pipe straps. Channels fastened to vertical steel channel drive posts, pressure driven through existing pavement into earth to minimum depth, as shown on the Contract Drawings.

5. Ceiling, Wall, and Floor support for VES trailer groundwater and vapor phase piping: Utilize one or more applicable methods specified A.1 through 4. above and the following:

a. Hangers and floor support for Pipe Sizes 1/2 to 2 Inch (13 to 38 mm): Carbon steel, adjustable swivel, split ring.

b. Hangers for Cold Pipe Sizes 2 Inches (50 mm) and Over: Carbon steel, adjustable, clevis.

c. Vertical Support: Steel riser clamp.

d. Floor Support for Pipe Sizes 4-6 Inches (100 mm): Cast iron adjustable pipe saddle, lock nut, nipple, floor flange, and concrete pier or steel support.

e. Copper Pipe Support: Carbon steel ring, adjustable, copper plated.

2.2 ACCESSORIES

A. Hanger Rods: Mild steel threaded both ends, threaded one end, or continuous threaded.

2.3 INSERTS

A. Inserts: Malleable iron case of [galvanized] steel shell and expander plug for threaded connection with lateral adjustment, top slot for reinforcing rods, lugs for attaching to forms; size inserts to suit threaded hanger rods or epoxy anchor system meeting or exceeding shear and pull out strength requirements.

2.4 FLASHING

A. Metal Flashing: 26 gage (0.5 mm thick) galvanized steel.

B. Metal Counterflashing: 22 gage (0.8 mm thick) galvanized steel.

C. Caps: Steel, 22 gage (0.8 mm) minimum; 16 gage (1.5 mm) at fire resistant elements.

2.5 SLEEVES

A. Sleeves for Pipes Through Walls: Steel pipe or 18 gage (1.2 mm thick) galvanized steel with water stop.

B. Sealant: Silicone.

PART 3 EXECUTION

3.1 INSTALLATION

A. Install in accordance with manufacturer's instructions and or Contractor's submitted methods which have been approved by the Contracting Officer.

3.2 INSERTS

A. Provide inserts for suspending hangers from masonry walls, reinforced concrete slabs and sides of reinforced concrete beams.

B. Where inserts are omitted, drill through concrete slab from below and provide through-bolt with recessed square steel plate and nut flush with top of slab.

3.3 PIPE HANGERS AND SUPPORTS

A. Support horizontal piping as scheduled.

B. Install hangers to provide minimum 1/2 inch (13 mm) space between finished covering and adjacent work.

C. Place hangers within 12 inches (300 mm) of each horizontal elbow or as otherwise shown on the Contract Drawings.

D. Use hangers with 1-1/2 inch (38 mm) minimum vertical adjustment.

E. Where several pipes can be installed in parallel and at same elevation, provide multiple or gang style channel hangers, Uni-Strut, or equal.

F. Support riser piping independently of connected horizontal piping.

G. Provide sheet lead packing between hanger or support and piping or as otherwise recommended by the hanger/pipe support manufacturer.

H. Design hangers for pipe movement without disengagement of supported pipe.

I. Prime coat exposed steel hangers and supports.

3.4 EQUIPMENT BASES AND SUPPORTS

A. Provide templates, anchor bolts, and accessories for mounting and anchoring equipment.

B. Construct supports of Steel pipe and fittings. Brace and fasten with flanges or plates bolted to structure.

C. Provide rigid anchors for pipes after vibration isolation components are installed.

3.5 FLASHING

A. Provide flexible flashing and metal counterflashing where piping penetrates weather or waterproofed walls, floors, and roofs.

3.6 SLEEVES

A. Provide reinforcing around sleeves.

B. Size sleeves large enough to allow for movement due to expansion and contraction. Provide for continuous insulation wrapping.

C. Extend sleeves through floors 1 inch (25 mm) above finished floor level. Calk sleeves.

3.7 SCHEDULES

A. As shown below, or otherwise as indicated by the Contract Drawings.

PIPE SIZE Inches (mm)	MAX. HANGER SPACING Feet (m)	HANGER ROD DIAMETER Inches (mm)
1/2 to 1-1/4 (12 to 32)	6.5 (2)	3/8 (9)
1-1/2 to 2 (38 to 50)	10 (3)	3/8 (9)
2-1/2 to 3 (62 to 75)	10 (3)	1/2 (13)
4 to 6 (100 to 150)	10 (3)	5/8 (15)
8 to 12 (200 to 300)	14 (4.25)	7/8 (22)

END OF SECTION

SECTION 15140
PIPE HANGERS, SUPPORTS AND RESTRAINTS

PART 1 DESCRIPTION

1.1 SECTION INCLUDES

A. Furnish an acceptable system of support, guidance and anchorage for all piping, valves and specials.

1.2 COORDINATION

A. Review installation procedures under other appropriate Sections and coordinate the Work that must be installed with or attached to the hangers and supports.

B. Coordinate the location and placement of any concrete inserts, and any cutting or drilling of structural members required.

C. Coordinate installation of the new structural piping supports as required with the existing structures, equipment and supports. The CONTRACTOR shall be responsible for cutting, re-welding or other modifications required to install and position such supports satisfactorily.

1.3 RELATED SECTIONS

1. Section 09900, Painting.

2. Division 15, Sections on Piping, Valves and Specials.

1.4 QUALITY ASSURANCE

A. General: The manufacturer shall conform to the following general criteria:

1. Materials and systems using stock or production parts shall be utilized unless otherwise shown or approved.

2. Accurate weight balance calculations shall be made to determine the required supporting force at each hanger location and the pipe weight load at each equipment concentration.

3. Pipe hangers shall be capable of supporting the pipe in all conditions of operation. They shall allow free expansion and contraction of the piping, and

prevent excessive stress resulting from transferred weight being induced into the pipe or connected equipment.

4. Hangers shall be installed so that they cannot become disengaged by movements of the supported pipe.

5. Conform to the recommendations of MSS-SP-58 and 69 except where requirements of this Section 15C7 are more stringent.

B. Source Quality Control:

1. Obtain each type of pipe hanger or support from no more than one manufacturer.

C. Reference Standards: Comply with applicable provisions and recommendations of the following except as otherwise shown or specified:

1. The Manufacturers Standardization Society of the Valve and Fittings Industry:

a. MSS SP-58, Pipe Hangers and Supports - Materials and Design.

b. MSS SP-69, Pipe Hangers and Supports - Selection and Application.

2. FS WW-H-171, Hangers and Supports, Pipe.

3. Underwriters' Laboratories, Inc., Standard UL-203-Pipe Hanger Equipment.

4. ANSI B1.1, Unified Inch Screw Threads.

5. ANSI B31, Codes for Pressure Piping.

6. ASTM A 36, Structural Steel.

7. ASTM A 47, Malleable Iron Castings.

8. ASTM A 276, stainless and Heat-Resisting Steel Bars and Shapes.

9. ASTM A 307, Carbon Steel Externally Threaded Standard Fasteners.

10. ASTM A 320, Alloy-Steel Bolting Materials for Low-Temperature Steel.

11. ASTM A 575, M-Grades Merchant Quality Hot-Rolled Carbon Steel Bars.

12. ASTM A 666, Austenitic Stainless Steel, Sheet, Strip, Plate and Flat Bar for Structural Applications.

13. ASTM A 668, Carbon and Alloy Steel Forgings for General Industrial Use.

1.5 SUBMITTALS

A. Shop Drawings: Submit for approval Shop Drawings showing the following:

1. All hangers and supports for piping system specified.

2. Location, installation, material, loads or forces, and deflection of all hangers and supports.

3. Manufacturers' catalogs, literature, and engineering data on all hangers and supports.

4. Load ratings, materials and installation shall be consistent with the recommendations of the MSS SP-58 and MSS SP-69.

1.6 PRODUCT DELIVERY, STORAGE, AND HANDLING

A. Delivery of Materials: All materials shall be inspected for size, quality, and quantity against approved Shop Drawings.

B. Storage of Materials: All materials shall be packaged, labeled, and stored in a covered dry location until time of installation.

PART 2 PRODUCTS

2.1 GENERAL REQUIREMENTS

A. Unless otherwise noted or shown, the CONTRACTOR is responsible for designing and supplying supports for all piping systems.

B. The hangers and supports shall meet with the following requirements:

1. Standard and fabricated hangers and supports shall be furnished complete with necessary inserts, bolts, nuts, rods, washers, and other accessories.

2. Run piping in groups and parallel to building walls where practicable. Provide minimum clearance of one inch between pipe and other work.

3. Install hangers or supports at all locations where piping changes direction. Horizontal valves 6-inches and larger shall be supported by a hanger on each side of valve.

4. All hangers and supports shall be capable of adjustment after placement of piping.

5. Types of hangers or supports shall be kept to a minimum.

6. All suspended or supported ductile iron pipe shall have a hanger or support adjacent to each hub.

7. Vertical piping shall be supported at each floor and between floors by stays or braces to prevent rattling and vibration.

8. Hanger rods shall be straight and vertical. Chain, wire, strap or perforated bar hangers shall not be used. Hangers shall not be suspended from piping.

9. Prevent contact between dissimilar metals by use of copper plated, rubber, vinyl coated, or stainless steel hangers or supports.

10. Hangers and supports shall provide for expansion throughout the full operating temperature range.

11. All plastic piping shall be supported by plastic coated steel pipe attachments.

12. Vertical struts and horizontal members shall be of a size suitable for the service intended and be compatible with frame inserts as specified in Section 5E3, Miscellaneous Metal Fabrications.

2.2 HANGERS AND SUPPORTS

A. Components of hangers and supports shall conform to the following where applicable:

1. Materials:

a. Bolts: ASTM A 307, Grade A, unless otherwise specified below.

b. Anchor and Expansions Bolts: Type 316 stainless steel, including nuts and washers.

c. Forgings: ASTM A 235.

d. Malleable Iron: ASTM A 47.

e. Rods and Bars: ASTM A 107.

f. Threads: Unified Screw Threads, Class 2A and 2B, ANSI B1.1. 9. Structural Steel: ASTM A 36.

2. Finish:

a. Steel Items: Galvanized unless otherwise specified or shown on the Drawings.

b. All plastic piping shall be supported by plastic coated (PVC) steel pipe attachments.

B. Pipe Attachments: The following types of pipe attachments are acceptable:

1. Adjustable Steel Clevis: FS WW-H-171E, Type 1.

2. Steel Double Bolt Pipe Clamp: FS WW-H-171E, Type 3.

3. Riser Clamp: FS WW-H-171E, Type 8.

4. Pipe Stanchion Saddle: FS WW-H-171E, Type 38.

5. Adjustable Pipe Saddle Support: FS WW-H-171E, Type 39.

6. Adjustable Pipe Roll and Base: FS WW-H-171E, Type 47.

7. Insulation Protection Shield: FS WW-H-171E, Type 41.

8. Insulation Protection Saddle: FS WW-H-171E, Type 40A and 40B.

9. Adjustable Roller Hanger: FS WW-H-171E, Type 44.

10. Pipe Slide Assembly:

a. Material: Carbon steel tee with stainless steel slide plate; carbon steel base with filled teflon pad.

b. Type: Suitable for field welding to steel pipe. Modify with clamps and U-bolts for use with ductile iron pipe.

c. Product and Manufacturer:

1) ITT Grinnell, Figure 257, Type 3.

2) Piping Specialties, Incorporated.

C. Structural Attachments: The following types of structural attachments are acceptable:

1. Welded Steel Bracket: FS WW-H-171E, Type 33.

2. Side Beam Bracket: FS WW-H-171E, Type 35.

3. Malleable Concrete Insert: FS WW-H-171E, Type 18.

4. Center I-Beam Clamp with Eye Nut: FS WW-H-171E, Type 28.

D. Hanger Rod Attachments: Use as required to complete assembly:

1. Forged Steel Clevis: FS WW-H-171E, Type 14.

2. Adjustable Turnbuckle: FS WW-H-171E, Type 15.

3. Forged Steel Weldless Eye Nut: FS WW-H-171E, Type 17.

E. Anchorage Items: All anchor or expansion bolts, nuts and washers for anchoring pipe hangers and supports shall be Type 316 stainless steel where stainless steel piping is installed and Type 304 stainless steel in all other locations.

F. All other hangers and supports shall be in accordance with MSS SP-58.

G. Product and Manufacturer: Provide hangers and supports as manufactured by one of the following:

1. ITT Grinnell Company.

2. Elcen Metal Products Company.

3. Or equal.

2.3 SURFACE PREPARATION AND PAINTING

A. All pipe supports except stainless steel and plastic coated steel for all piping listed in the Schedule to be painted shall be prepared and painted in accordance with the requirements of Section 09900, Painting.

PART 3 EXECUTION

3.1 GENERAL

A. Locate hangers, supports, and accessories to support piping, valves, and at all concentrated loads.

B. Locate hangers, supports, and accessories within maximum span lengths specified to support continuous pipeline runs unaffected by concentrated loadings.

C. Install hangers or supports at all locations where piping changes direction.

D. Locate hangers and supports to prevent vibration or swaying and to provide for expansion and contraction.

E. Hangers rods shall be straight and vertical. Chain, wire, strap or perforated bar hangers shall not be used. Hangers shall not be suspended from piping.

F. Install items to be embedded before concrete placement.

G. Fasten embedded items securely to prevent movement during concrete placement.

H. Hanger and support units installations methods shall be in accordance with manufacturer's recommendations.

I. Adjust hangers and supports and place grout for concrete supports to bring pipelines to specified elevations. Grout shall be as specified in Section 3K, Concrete.

J. Prevent contact between dissimilar metals by use of copper plated, rubber, vinyl coated, or stainless steel hangers or supports.

3.2 INSTALLATION

A. Supports and Hangers for Horizontal Pipes:

1. Space supports and hangers for all piping no farther apart than shown below unless otherwise noted:

a. Copper Tube:

1) Pipes up to 2-inch: 6 feet-0 inch center to center.

2) Pipes 2-1/2-inch and larger: 8 feet-0 inch center to center.

b. Steel, Ductile Iron and Stainless Steel Pipe:

1) Pipes up to 1-inch: 6 feet-0 inch center to center.

2) Pipes 1-1/2-inch to 6-inch: 8 feet-0 inch center to center.

3) Pipes 8-inches and larger: 10 feet-0 inch center to center.

4) In addition, ductile iron pipe shall have a minimum of two supports per length and shall have a hanger or support adjacent to each hub.

c. Plastic Pipe:

1) Maximum support spacing for plastic pipe at ambient temperature shall be one-half the above values for steel pipe except that support spacing shall not exceed 4 foot-0 inches.

2. Additional supports shall be placed immediately adjacent to any change in piping direction, and on both sides of valves, expansion joints, and couplings.

3. Hanger Rods shall be sized for maximum pipe loads and according to the schedule herein for minimum rod diameters:

Nominal Pipe (Inches)	Minimum Rod Diameter (Inches)
1/2 through 3	1/2
4 through 5	5/8
6	3/4
8 through 12	7/8
14 through 18	1
20 through 30	1-1/4

4. Hangers and supports for pipe 3-inch diameter and larger shall be adjustable.

B. Supports for Vertical Piping:

1. Provide riser clamp placed under hub, fitting or coupling with approved solid bearing on steel sleeve.

2. Where riser clamps are used with plastic piping they shall be modified so as not to exert any compressive forces on the pipe.

3. Vertical piping shall be supported at each floor and between floors by stays or braces to prevent rattling and vibration.

4. Vertical plastic piping riser clamps shall be PVC coated.

C. Expansion Anchors:

1. Use to fasten all base supports to floors.

2. Use at hangers and brackets to support piping 1-inch diameter and smaller and only if the anchor is designed to carry 200 percent of the load.

3.3 ACCEPTANCE AND SERVICE

A. Acceptance: All pipe systems shall be brought up to operating pressures and temperatures. Systems shall be cycled to duplicate operating conditions. All malfunctions shall be corrected. The CONTRACTOR shall furnish all labor and materials to readjust and correct faults with hangers and supports for the piping systems.

END OF SECTION 15140

SECTION 15260

PIPING INSULATION

1 PART 1 GENERAL

1.1 SECTION INCLUDES

A. Piping insulation.

B. Jackets and accessories.

1.2 RELATED SECTIONS

A. Section 15060 - Piping and Appurtenances.

B. Section 16C5 - Heat Tracing

1.3 REFERENCES

A. ASTM B209 - Aluminum and Aluminum-Alloy Sheet and Plate.

B. ASTM C534 - Preformed Flexible Elastomeric Cellular Thermal Insulation in Sheet and Tubular Form.

C. ASTM C921 - Properties of Jacketing Materials for Thermal Insulation.

D. ASTM D1056 - Flexible Cellular Materials - Sponge or Expanded Rubber.

E. ASTM D1667 - Flexible Cellular Materials - Vinyl Chloride Polymers and Copolymers (Closed Cell Foam).

1.4 SUBMITTALS

A. Submit under provisions of Section 1E4.

B. Product Data: Provide product description, list of materials and thickness for each service, and locations.

C. Manufacturer's Installation Instructions: Indicate procedures which ensure acceptable workmanship and installation standards will be achieved.

1.5 QUALIFICATIONS

A. Applicator: Company specializing in performing the work of this section with minimum 3 years experience.

1.6 DELIVERY, STORAGE, AND HANDLING

A. Deliver, store, protect, and handle products to site under provisions of Sections 1G9 and 1G17.

B. Deliver materials to site in original factory packaging, labelled with manufacturer's identification, including product density and thickness.

C. Store insulation in original wrapping and protect from weather and construction traffic.

D. Protect insulation against dirt, water, chemical, and mechanical damage.

1.7 ENVIRONMENTAL REQUIREMENTS

A. Maintain ambient temperatures and conditions required by manufacturers of adhesives, mastics, and insulation cements.

B. Maintain temperature during and after installation for minimum period of 24 hours.

2 PART 2 PRODUCTS

2.1 POLYETHYLENE

A. Insulation: ASTM D1056 or D1667; flexible, closed cell, polyethylene, slit tubing.
1. 'K' ('ksi') Value: ASTM C177; 0.25 at 75 degrees F (0.036 at 24 degrees C).
2. Minimum Service Temperature: -90 degrees F (-67 degrees C).
3. Maximum Service Temperature: 212 degrees F (100 degrees C).
4. Density: ASTM 1667; 2 lb/cu ft (32 kg/cu m).
5. Maximum Moisture Absorbtion: 1.0 percent by volume.
6. Moisture Vapor Transmission: ASTM E96; 0.01 perm inches.
7. Maximum Flame Spread: ASTM E84; 25.
8. Maximum Smoke Developed: ASTM E84; 50.
9. Connection: Contact adhesive.

2.2 JACKETS

A. Aluminum Jacket: ASTM B209.
1. Thickness: 0.020 inch (0.50 mm) sheet.
2. Finish: Smooth.

3. Joining: Longitudinal slip joints and 2 inch (50 mm) laps.
4. Fittings: 0.02 inch (0.5 mm) thick die shaped fitting covers with factory attached protective liner.
5. Metal Jacket Bands: 3/8 inch (10 mm) wide; 0.015 inch (0.38 mm) thick aluminum.

3 PART 3 EXECUTION

3.1 EXAMINATION

A. Verify that piping has been tested before applying insulation materials.

B. Verify that surfaces are clean, foreign material removed, and dry.

3.2 INSTALLATION

A. Install materials in accordance with manufacturer's instructions.

B. On all exposed piping for liquid and vapor transmission:

1. Locate insulation and cover seams in least visible locations.
2. Size large enough to enclose pipe and heat tracer.
3. Provide vapor barrier jackets, factory applied or field applied.
4. Insulate fittings, joints, and valves with molded insulation of like material and thickness as adjacent pipe.
5. Finish with glass cloth and vapor barrier adhesive.
6. Continue insulation through walls, sleeves, pipe hangers, and other pipe penetrations.
7. Insulate entire system including fittings, valves, unions, flanges, strainers, flexible connections, [pump bodies,] and expansion joints.
8. Provide access provisions for well extraction well heads, valves, conduit boxes, and pressure gauge assemblies.

C. Inserts and Shields:
1. Application: Piping 1-1/2 inches (40 mm) diameter or larger.
2. Shields: Galvanized steel between pipe hangers or pipe hanger rolls and inserts.
3. Insert Location: Between support shield and piping and under the finish jacket.
4. Insert Configuration: Minimum 6 inches (150 mm) long, of same thickness and contour as adjoining insulation; may be factory fabricated.
5. Insert Material: ASTM C640 cork or other heavy density insulating material suitable for the planned temperature range.

D. Finish insulation at supports, protrusions, and interruptions.

E. For exterior applications, provide vapor barrier jacket. Insulate fittings, joints, and valves with insulation of like material and thickness as adjoining pipe, and finish with glass mesh reinforced vapor barrier cement. Cover with aluminum jacket with seams located on bottom side of horizontal piping.

F. For buried piping, provide factory fabricated assembly with inner all-purpose service jacket with self sealing lap, and asphalt impregnated open mesh glass fabric, with one mil (0.025 mm) thick aluminum foil sandwiched between three layers of bituminous compound; outer surface faced with a polyester film.

3.3 TOLERANCE

A. Substituted insulation materials shall provide thermal resistance within 10 percent at normal conditions, as materials indicated.

3.4 POLYETHYLENE INSULATION SCHEDULE

	PIPING SYSTEMS	PIPE SIZE Inch	THICKNESS Inch
A.	Coaxial Extraction Well Piping	4	1
B.	Groundwater Discharge Piping	2	1

END OF SECTION

SECTION 15335
DRY PIPE SPRINKLER SYSTEM

PART 1 GENERAL

1.1 SECTION INCLUDES

A. Provide a complete and workable system of automatic dry-pipe sprinklers including all piping, sprinkler heads, alarms and accessories as specified and to the limits shown.

1.2 QUALITY ASSURANCE

A. Requirements of Regulatory Agencies:

1. Building Codes: Comply with applicable requirements of all governing authorities and the following codes:

   a. State of Rhode Island Basic Building Code.

   b. Cranston Rhode Island Fire Department.

   c. NFPA Standard No. 13. Sprinkler Systems.

   d. NFPA Standard No. 24.

   e. Permits: CONTRACTOR shall obtain and pay for all required permits, fees, inspections and approvals by authorities having jurisdiction.

B. All piping and fittings shall be Factory Mutual or Underwriters Laboratories approved. All equipment used shall be Factory Mutual or Underwriters Laboratories listed and/or labeled.

C. Reference Standards: Comply with applicable provisions and recommendations of the following except as otherwise shown or specified:

1. ASTM A 47, Malleable Iron Castings Grade 32510.

2. ASTM A 48, Gray Iron Castings.

3. ASTM A 53, Welded and Seamless Steel Pipe.

4. ASTM A 120, Black and Hot-Dipped Zinc Coated (Galvanized) Welded and Seamless Steel Pipe for Ordinary Uses.

5. ASTM A 183, Heat-Treated Carbon Steel Track Bolts and Carbon Steel Nuts.

6. ASTM A 126, Gray Iron Castings for Valves, Flanges and Pipe Fittings.

7. ASTM A 234, Piping Fittings of Wrought Carbon Steel and Alloy Steel for Moderate and Elevated Temperatures.

8. ASTM A 307, Carbon Steel Externally and Internally Threaded Fasteners.

9. ASTM A 449, Quenched and Tempered Steel Bolts and Studs.

10. ASTM B 5, Electrolytic Copper Wire Bars, Cakes, Slabs, Billets, Ingots and Ingot bards.

11. ASTM B 19, Cartridge Brass Sheet Strip, Plate, Bar and Disks.

12. ASTM B 584, Copper Alloy Sand Castings for General Applications.

13. ASTM D 1330, Sheet Rubber Gaskets.

14. ASTM D 2000, Elastomeric Materials for Automotive Applications.

15. ANSI A21.10, Gray-Iron and Ductile Iron Fittings.

16. ANSI A21.11, Rubber Gasket Joints for Cat Iron and Ductile Iron Pressure Pipe and Fittings.

17. ANSI A21.15, Flanged Cast Iron and Ductile Iron Pipe with Threaded Flanges.

18. ANSI A21.51, Ductile Iron Pipe Centrifugally Cast.

19. ANSI B16.1, Cast Iron Pipe Flanges and Flanged Fittings.

20. ANSI B16.3, Malleable Iron Screwed Fittings, 150 and 300 lb.

21. ANSI B16.4, Cast Iron Screwed Fittings, 125 and 250 lb.

22. ANSI B16.5, Steel Pipe Flanges, Flanged Valves and Fittings.

23. ANSI B16.9, Factory-Made Wrought Steel Buttweld Fittings.

24. ANSI B16.11, Forged Steel Fittings, Socket Welding and Threaded.

25. ANSI B16.25, Buttwelding Ends.

26. ANSI B2.1, Pipe Threads.

27. ANSI B31.1, Power Piping.

28. ANSI B36.10, Welded and Seamless Wrought Steel Pipe.

29. CDA 411, Brass.

30. AWWA C703, Cold Water Meters-Fire Service Type.

31. NFPA Standard No. 13, Standard for the Installation of Sprinkler Systems.

32. NFPA Standard No. 24, Standard for Outside Protection.

D. Field Measurements: Take field measurements where required prior to preparation of Shop Drawings and fabrication to ensure proper fitting of work.

1.3 SUBMITTALS

A. Shop Drawings: Submit for approval, the following:

1. Manufacturers literature, specifications, and engineering data including dimensions, size, weights and materials for the following:

a. Pipe and fittings.

b. Unions.

c. Flexible couplings.

d. Valves.

e. Sprinkler heads.

f. Sprinkler cabinet.

g. Hangers and supports.

h. Escutcheons.

i. Pipe labels.

j. Other materials and equipment requested by ENGINEER.

2. CONTRACTOR shall prepare a complete set of plans, Specifications and calculations as required for obtaining approval by the local building and fire departments.

3. Detailed 1/4 inch scale drawings showing materials and dimensions of the complete automatic sprinkler system.

B. Record Drawings: During progress of the Work, keep an up to date set of drawings showing field and Shop Drawing modifications. Immediately upon completion of piping Work, submit cloth or mylar tracing showing the actual in place installation of all piping and equipment installed under this Section at a scale satisfactory to the OWNER. The Drawings shall show all piping on plans and in sections, with all reference dimensions and elevations required for complete "record" Drawings of the piping systems. Two paper prints shall also be furnished. The tracings shall be furnished not later than 30 days after completion of the Contract and prior to final payment.

1.4 JOB CONDITIONS

A. Protection: Properly plug or cap the open ends of all pipe at the end of each days work or other stopping point throughout construction. Equipment shall be tightly covered and protected against dirt, water and chemical or mechanical damaged.

B. Existing Conditions:

PART 2 PRODUCTS

2.1 MATERIALS

A. Steel Pipe:

1. Pipe:

a. Reference: ASTM A 120.

b. Weight: Schedule 40.

c. Finish: Black.

2. Fittings:

a. Threaded: ANSI B2.1.

1) Reference: ANSI B16.3, 150 lb.

2) Material: Malleable Iron.

3) Finish: Black.

4) Rating: 175 lbs. WOG.

3. Unions:

a. Threaded: Malleable Iron, FS WW-U-531, Class 1, Type B. 1-1/2 inch pipe size and smaller only.

4. Thread Tape:

a. Material: Teflon.

b. Underwriters laboratory or Factory Mutual approved.

5. Flexible Couplings:

a. Manufacturers: Provide couplings made by one of the following:

1) Victaulic Company of America.

2) Aeroquip Corporation, Gustin Bacon Division.

b. Material: Malleable from ASTM A 47.

c. Finish: Red.

d. Nuts and Bolts: Carbon steel ASTM A 449 and ASTM A 183.

e. Gasket: EPDM, ASTM D 2000.

2.2 EQUIPMENT

A. Bronze Body Gate Valves:

1. Manufacturers: Provide one of the following:

   a. Jenkins Brothers Corporation Fig. 275-U.

   b. Walworth Company Fig. No. 873.

   c. Or equal.

2. Type: Outside screw and yoke, rising stem solid wedge disc.

3. Materials: Brass and Bronze

4. Rating: 175 lb. WOG.

5. End Connections: Threaded.

6. Markings: UL, FM, rating and manufacturers markings cast on body.

B. Steel Body Gate Valves:

1. Manufacturer: Provide one of the following:

   a. Mueller Co. A-2052-6

   b. Or equal.

2. Type: Non-Rising stem post indicator flange

3. Materials: Iron Body

4. Rating: 175 PSI working pressure

5. End Connections: 125 lb. flanged ANSI B16.1

6. Markings: UL, FM Rating

7. Size: 4 inch to 14 inch pipe size

C. Steel Wafer-Body Butterfly Valve:

1. Manufacturer: Provide one of the following:

   a. Mueller Co. B-3250-00

   b. Or equal.

2. Type: Gear Operated Butterfly

3. Materials: Steel

4. Rating 175 lb working pressure

5. End connections wafer body fits between ANSI B16.5, Class 150 flanges

6. Markings: UL, FM Rating

7. Size: 2-1/2 inch to 8 inch pipe size

8. Accessories: No switch required

D. Steel Body Gate Valve:

1. Manufacturer: Provide one of the following:

   a. Mueller Co. A-2078-6

   b. Or equal.

2. Type: OS&Y

3. Materials: Iron Body

4. Rating: 200 PSI working pressure

5. End Connections: 125 lb flanged ANSI B16.1

6. Markings: UL, FM Rating

7. Size: 4 inch to 10 inch sizes.

E. Cast Iron Wafer Body Check Valve:

1. Manufacturer: Provide one of the following:

   a. Mueller Co. A-2102

   b. Or equal.

2. Type: Wafer Body

3. Materials: Cast Iron

4. Rating: 175 PSI working pressure

5. End Connection: Wafer Body fits between ASNI B16.5 Class 150 flanges.

6. Markings: UL, FM Rating

7. Sizes: 4 inch to 8 inch pipe sizes

F. Detector Check Valve

1. Manufacturer: Provide one of the following:

   a. Mueller Co. A-2132-6

   b. Or equal.

2. Type: Detector

3. Material: Cast Iron

4. Rating: 175 PSI working pressure

5. End Connections: 125 lb flanged ANSI B16.1

6. Markings: UL, FM Rating

7. Size: 4 inch to 10 inch pipe sizes

8. Meter: Optional

G. Dry Pipe Valve:

1. Manufacturer: Provide one of the following:

   a. Grinnell Corp. F302 with Posi-Quick dry pipe valve accelerator F311

2. Type: Differential latch

3. Material: Cast Iron

4. Rating: 175 lb working pressure

5. End Connections: 125 flanged ANSI B16.1

6. Markings: UL1, ULC, FM, LPC & SSL Rating

7. Size: 4 inch & 6 inch pipe sizes

8. Accessories Model F311 Accelerator

H. Connections Fire Department:

1. Manufacturer: Provide one of the following:

   a. Grinnell Model F715

   b. Or equal.

2. Size: 2-1/2" hose x 2-1/2" hose x 4" NPT

I. Indicator Post

1. Manufacturer: Provide one of the following:

   a. Grinnell Model F753

   b. Or equal

2. Type: Wall mounted

3. Markings: UL1 and ULC listed FM approved

J. Check Valve

1. Manufacturer: Provide one of the following:

   a. Grinnell model F520

   b. Or equal

2. Type: Swing check vertical or horizontal mounting

3. End Connections: 125 lb flange ANSI B16.1

4. Size: 4 inch to 8 inch pipe sizes

K. Automatic Sprinklers, Upright

1. Manufacturer: Provide one of the following:

   a. Grinnell Model F950 Duraspeed

   b. Or equal.

2. Type:

   a. Upright spray 1/2" orifice

3. Rating: 175 lb WOG.

4. Temperature Rating: 212°F.

5. Markings:

   a. All sprinklers shall be permanently marked with the manufacturer, the model, year and temperature

6. End Connection: Threaded

L. Automatic Sprinklers, Pendent

1. Same as above

2. Type:

a. Pendent spray 1/2" orifice

3. Same as above

4. Same as above

5. Same as above

6. Same as above

7. Size: 1-inch to 2 inch pipe size.

M. Sprinkler Cabinet:

1. Manufacturer: Provide cabinets made by one of the following:

a. Reliable Co.

b. Or equal.

2. Type: Sprinkler head cabinet for sprinkler head, sprinkler wrench storage.

3. Material: Enameled Steel.

4. Markings: Manufacturers name and words "AUTOMATIC SPRINKLERS, RESERVE SUPPLY" stenciled on face of cabinet.

5. Contents:

a. Two sprinkler wrenches.

b. 6 spare sprinkler heads of each type used in the building.

N. Hangers and Supports:

1. Manufacturer: Provide hangers made by one of the following:

a. ITT Grinnell Corporation.

b. Elcen Metal Products Company.

c. Or equal.

2. Type: clamps, hooks, rods, hangers used to support a sprinkler piping system from the structure.

3. Materials: Comply with the requirements of NFPA No. 13, Underwriters' Laboratory and Factory Mutual approved.

4. Supports and Stands: Section 5A

O. Escutcheons:

1. Manufacturers: Provide one of the following:

a. ITT Grinnell Corporation Figure 13.
b. F and S Manufacturing Company Figure 602.
c. Or equal.

2. Type: Split ring with set screw.

3. Material: Chrome plated cast brass.

P. Pipe Labels:

1. Type: Self-adhering, temperature resistant, waterproof, corrosion resistant.

2. Marker size, Marker color, Legend size, and Legend color shall conform to ANSI A13.1.

PART 3 EXECUTION

3.1 INSTALLATION

A. General:

1. The installation of the sprinkler system shall conform to the requirements of the NFPA Standard No. 13, and the supplemental Specifications below.

2. Provide all necessary supports, angle iron stands, miscellaneous steel, inserts, anchor bolts and hangers required for all equipment furnished under this Section. Supports, angle iron stands, etc., shall be in accordance with Section 5A.

3. Install all items as shown, specified, and as recommended by the manufacturer.

4. Request instructions from the ENGINEER when there is a conflict between the manufacturer's recommendations and the Drawings or Specifications.

5. Present conflicts between piping systems and equipment or structures to the ENGINEER who will determine corrective measures to be taken.

6. Do not modify structures to facilitate installation of piping unless specifically approved by the ENGINEER.

7. Defective Materials: Examine piping, fittings, valves, sprinkler heads, and accessories to be installed and reject those which are defective or in poor condition.

8. Cleaning: Thoroughly clean all piping, fittings, valves and accessories.

B. Piping:

1. Install straight runs true to line and elevation.

2. Install vertical pipe truly plumb in all directions.

3. Install piping parallel or perpendicular to building walls. Piping at odd angles and 45° runs across corners will not be accepted unless specifically shown on the Drawings.

4. Install small diameter piping generally as shown on the Drawings when specific locations and elevations are not indicated. Locate such piping as required to avoid ducts, equipment, beams, etc.

5. Provide drains at low points of all lines and wherever sprinkler piping is trapped.

6. Install underground piping in accordance with NFPA No. 24 Chapter 9.

C. Joints:

1. General:

a. Make joints in accordance with the pipe manufacturer's recommendations and the supplemental specifications below.

b. Cut piping accurately and squarely and install without forcing or springing.

c. Ream out all pipes and tubing to full inside diameter after cutting.

d. Remove all cuttings and foreign matter from the inside of pipes and tubing before installation.

2. Threaded Joints: Use standard, right hand tapered full depth threads on steel piping and apply an approved joint compounds to the male threads only, before installation. Leave not more than three pipe threads exposed at each connection.

3. Flanged Joints: Assemble flanged joints with approved full face gaskets and gasket compounds and draw up flange bolts evenly.

4. Welded Joints: ANSI B31.1 latest revision and requirements of the American Welding Society for pipe welding.

D. Unions:

1. Provide a union downstream of each valve with screwed connections.

2. Provide screwed or flanged unions where shown, where necessary to install piping, and so that piping may be readily dismantled in small sections.

E. Valves and Accessories:

1. Provide supports for large valves, and other heavy items as shown.

2. Install floor stands as shown and as recommended by the manufacturer.

3. Position valve operators as shown. When the position is not shown, install the valve so that it can be conveniently operated and as approved by the ENGINEER. Avoid placing operators at odd angles to the floors or walls.

F. Head Quantity:

1. Piping and sprinkler heads shown on the Drawings are for estimating purposes only. Actual quantity and locations shall be as required by the local fire protection agency (Fire Marshall's Office). CONTRACTOR shall furnish and install complete, all piping, and sprinkler heads as required to conform to all local, state, and federal laws, codes, and ordinances having jurisdiction over this project.

G. Sprinkler Head Guards:

1. Sprinkler heads which are less than 84 inches above finished floor or are so located as to be subject to injury, shall be protected with approved guards.

H. Gages:

1. An approved 3-1/2-inch diameter spring pressure gage shall be installed at each test pipe location.

I. Control Valves:

1. All section control valves shall be installed in accessible locations.

J. Test Pipes:

1. Test pipes shall be provided in accordance with NFPA Bulletin 13 and same shall discharge into the nearest open site floor drain or outside of building.

K. Signs:

1. Enameled signs with appropriate nomenclature as approved by the COR, shall be installed at each control valve, drain, inspector's test station, alarm horn, etc.

END OF SECTION 15335

SECTION 15365
PORTABLE FIRE PROTECTION EQUIPMENT

PART 1 GENERAL

1.1 SECTION INCLUDES

A. Furnish and install all portable fire protection equipment work.

B. Coordination:

1. Review installation procedures under other Sections and coordinate the installation of items that must be installed with the portable fire extinguishers.

1.2 RELATED SECTIONS

1. Section 10400, Identification Devices.

1.3 QUALITY ASSURANCE

A. Source Quality Control: Furnish portable fire protection equipment Work from on;y one manufacturer.

B. Requirements of Regulatory Agencies: Provide only portable fire extinguishers that are approved and labeled by UL.

C. Reference Standards: Comply with applicable provisions and recommendations of the following, except where otherwise shown or specified.

1. UL, Fire Classification Rating.

1.4 SUBMITTALS

A. Shop Drawings: Submit for approval copies of manufacturer's technical data, certification of UL rating, and installation instructions for all portable fire protection equipment Work.

PART 2 PRODUCTS

2.1 MATERIALS

A. General: Provide manufacturer's standard mounting brackets for portable fire extinguishers size as specified, unless recessed cabinets are shown.

B. Multi-Purpose Dry Chemical:

1. 10 pound capacity, enameled steel container with pressure-indicating gauge, for Class A, Class B, Class C fires, UL rating 4A-60 BC.

2. Product and Manufacturer: Provide one of the following:

a. Cosmic Model 10E by J.L. Industries.

b. Model 10 TAS by Walter Kidde and Company.

c. Or equal.

C. Carbon Dioxide:

1. 10 pound enameled steel container capacity, for Class B and Class C fires Ul rating.

2. Product and Manufacturer: Provide one of the following:

a. Sentinel Model 10 by J.L. Industries.

b. 10 KS-3 by Walter Kidde and Company.

c. Or equal.

PART 3 - EXECUTION

3.1 INSPECTION

A. CONTRACTOR and his installer must examine the substrates and conditions under which the portable fire extinguishers are to be installed, and notify ENGINEER in writing of conditions detrimental to the proper and timely completion of the Work. Do not proceed with the Work until unsatisfactory conditions have been corrected in a manner acceptable to ENGINEER.

3.2 INSTALLATION

A. Install in locations and at mounting of 3 feet-0 inches. Securely fasten to structure, square and plumb, in accordance with manufacturer's instructions.

B. Wherever exact locations of units are not shown, locate as directed by ENGINEER.

C. Install signs directly above surface mounted portable fire extinguishers, securely mounted, attached to substrate in accordance with manufacturer's instructions. Install level and plumb.

D. Recharge and bring last inspection date up to coincide as nearly as possible with date of Final Acceptance by OWNER, to provide full term inspection interval.

E. Inform OWNER of next required inspection and recharging date.

3.3 SCHEDULE

A. Type A - Dry chemical, wall mounted.

B. Type B - Carbon dioxide, wall mounted.

END OF SECTION 15365

SECTION 15400
COMPRESSED AIR EQUIPMENT

PART 1 GENERAL

1.1 SECTION INCLUDES

A. Furnish and install a complete and workable compressed air system.

1.2 RELATED SECTIONS

1. Section 05505, Anchor Bolts, Expansion Anchors and Concrete Inserts.

2. Section 13400, Instrumentation and Control Equipment.

3. Division 15, Sections on Piping.

4. Division 16, Electrical.

1.3 QUALITY ASSURANCE

A. Obtain all of the equipment specified herein from the supplier of the air compressors in whom responsibility for the proper function of all the units as a completely integrated system shall be vested. The CONTRACTOR shall, however, retain ultimate responsibility under this Contract for equipment coordination, installation, operation and guarantee.

1.4 SUBMITTALS

A. Shop Drawings: Submit for approval the following:

1. Equipment layout drawings.

2. Wiring diagrams.

3. Piping diagrams.

4. Manufacturer's literature, illustrations, specifications and engineering data including: weight, dimensions, materials of construction, and performance e.

B. Operation and Maintenance: Submit complete manuals including:

1. Copies of all Shop Drawings, test results, maintenance data and schedules,

description of operation and spare parts information.

1.5 GUARANTEE

A. Guarantee: In addition to the manufacturer's standard guarantee, CONTRACTOR shall include the services of a factory-trained technician to provide repair service for the equipment for the period of one year commencing with the time the equipment is placed in continuous permanent operation (Substantial Completion). This service shall include the cost of all replacement parts required during the interval.

B. Warranty: The compressor units shall also be warranted by the manufacturer for a five year period from the time the equipment is placed in continuous operation (Substantial Completion). Wear items such as seals and bearings may be prorated during the five year period.

PART 2 PRODUCTS

2.1 AIR COMPRESSORS AND ACCESSORIES

A. General:

1. The compressed air system shall consist of one (1), lubricated rotary screw, compressor, a horizontal receiver tank which is mounted on and all accessories and appurtenances as specified herein.

2. Equipment required shall include, but is not limited to: one (1) 100 percent capacity, dynamically-balanced air compressor rated nominally at 200 SCFM and 125 psig; an entrainment separator complete with automatic condensate trap,, and horizontal ASME-coded air receivers for the compressors. Each receiver shall also be equipped with accessories, and they shall include automatic condensate traps, ASME-rated relief valves, pressure gages, temperature gages, service valves, and three pressure switches. Compressor control panel, prefilters for oil removal with automatic valve, one heatless regenerative-type air dryer, and one afterfilter shall be furnished. Compressors shall be furnished with vibration isolation mounts.

B. Equipment:

1. Filter-silencer: The suction piping to each compressor shall be equipped with a "fail-safe," dry-type paper filter element in combination with an intake silencer.

2. Air Compressors: Each compressor shall be equipped with a low oil level or pressure protection switch and a belt guard for the drive. Lubrication shall be of

either the pressure or splash type. Each compressor shall be equipped with a low oil level or pressure protection switch and a belt guard for the drive. Lubrication shall be of either the pressure or splash type. Each compressor shall be supplied with an energy efficient, foot-mounted, NEMA Design B, totally-enclosed, fan-cooled, squirrel-cage induction motor suitable for operation on 460 volts, 3 phase, 60 Hz. Each motor shall be of sufficient rating to drive the compressor continuously at design conditions without exceeding the nameplate rating but shall not be more than 15 horsepower. Maximum speed shall be 1800 rpm. Motors shall have a 1.15 service factor and shall be supplied with anti-friction bearings having a minimum B-10 life of 50,000 hours, as defined by AFBMA. Bearings shall be arranged for grease or oil lubrication. Motor insulation systems shall be Class F. The maximum temperature rise above ambient shall not exceed the value specified for Class B insulation systems. Motors shall be as manufactured by Reliance Electric Company, General Electric or equal.

3. Air Receivers: Receivers shall be a horizontal configuration, of welded steel construction and shall meet ASME code requirements. Receivers shall each have a minimum capacity of 120 gallons. Equipment to be mounted on each receiver shall be as specified hereinafter.

4. Pressure Switches:

   a. Type: Bronze Bourdon tube-type with aluminum alloy case, 4-1/2-inch diameter, white face with black characters and 1/4 inch NPT connection.

   b. Setpoint Accuracy: ± percent of span, field adjustable over full range by external calibrated dial.

   c. Deadband: 1 psig average.

   d. Contacts: Snap action, SPFT rated, 5 amperes at 120 volts, 60 Hz.

   e. Range: 0-150 psig.

   f. Service: Receivers, three units: high low pressure switch, low, "low-low" pressure switch and "high-high" pressure switch.

5. Automatic Drain Valves:

   a. Service: Receivers,, prefilter (oil filter).

   b. Electrically operated, 120 volts, 60 Hz, solid state controls.

c. Controls shall be installed in compressor control panel as specified hereinafter.

d. Valve: Brass construction, full port, 1/8 inch orifice with minimum drain capacity of 4 gph.

6. Pressure Gage Indicators:

a. Service: Compressor outlet air discharge upstream of each aftercooler, connected to each air receiver, downstream of afterfilter.

b. Range: 0-150 psig.

c. Accuracy: ± 1.0 percent of scale range.

d. Type: Brass Bourdon tube-type, 4-1/2-inch diameter dial, aluminum alloy case.

7. Air Temperature Gage Indicators:

a. Service: Compressor outlet air discharge temperature upstream of after cooler, connected to air receiver, upstream of air dryer.

b. Range: 0 to 250 F.

8. Prefilters:

a. Prefilter (oil filter) shall be furnished with an automatic drain valve. Furnish additional prefilter ahead of oil filter. Additional unit is similar to afterfilter and will be used to prolong life of prefilter.

b. Type: Replaceable cartridge.

c. Removal: 100 percent removal of all particles 0.25 microns and larger, 99.999 percent efficiency in removal of oil aerosols.

d. Operating Conditions:

1) Flow: 100 SCFM (minimum).

2) Pressure: 100 psig.

e. Service: Upstream of air dryer.

9. Air Dryer:

a. Type: Heatless regenerative type complete with switching valves, adjusting valve, purge flow indicator, ASME-coded chambers filled with dessicant and automatic controls. The unit shall have the following characteristics:

1) Operating Conditions - Design Data:

a) Nominal Inlet Capacity: 200 SCFM.

b) Pressure: 125 psig.

c) Maximum Air Temperature: 115 F.

d) Dry air pressure dewpoint: -40 F.

b. Electrical Input: 120 volts, single phase, 60 Hz, derived from compressor control panel.

c. Electrical Enclosure: NEMA 4X.

d. Instrumentation:

1) Chamber pressure gages.

2) Moisture indicator.

3) Purge flow indicator.

4) Switching failure contact.

5) Purge economizer.

10. Afterfilter:

a. Service: Downstream of air dryer.

b. Removal Rating: 1.0 micron and larger.

c. Rating: 200 SCFM at 125 psig.

11. Equipment Bypass: Equipment bypass piping shall be furnished for the following equipment:

a. Heatless regenerative air dryer.

b. Afterfilter.

12. Miscellaneous Valves and Accessories: The following miscellaneous valves and accessories shall be furnished:

a. Check Valves: Located downstream of air compressors.

b. Valves: Conform with units specified under Section 15080.

c. Flexible Connectors: Locate units between air compressors and air receivers.

d. Pressure Relief Valves: Locate a unit on each compressor discharge pipe and at each receiver.

13. Common Compressor Control Panel: Control panel shall conform to the applicable requirements of Section 13400. Unit shall be suitable for wall mounting and shall have the following features:

a. NEMA 4 enclosure.

b. One main disconnect switch for each compressor. Deactivating the circuit breaker for one compressor shall not preclude full automatic operation of the other compressor.

c. A magnetic full-voltage across-the-line motor starter with 120 volt control circuit for each compressor motor. The starters shall have three thermal overload relay units of the melting alloy type. The started shall also be provided with a normally-closed motor starter contact for control of the motor space heaters furnished with each compressor motor.

d. Control transformer to provide supply voltage for controls; 480/120 volts, 60 Hz, 200 VA minimum. If other voltages are required, appropriate transformers shall be installed.

e. Pilot lights to be transformer-type, 24 volts.

f. Elapsed time meter for each motor. Meter to be four or five digit, nonreset type, graduated in hours.

g. Engraved phenolic nameplates mounted on panels below each push button, light, instrument and accessory. Nameplate location and designated shall be subject to approval of CONTRACTOR. Nameplates to have black letters on white background. Nameplates shall be attached with stainless steel screws.

h. "Off-Auto" selector switch (each compressor).

i. "On' indicating light (green) for each compressor.

j. Alarm indicating lights (red) for the following conditions:

1) Air compressor overload (each compressor).

2) Receiver air pressure: High.

3) Receiver air pressure: Low.

4) Air dryer switching failure.

k. Alarm and "On' indicators shall be of the indicator lamp-type with the following features:

1) Lamps: Transformer type 24 volts, amber.

2) Relays: 115 volts, 60 Hz.

3) Logic: Lights, steady bright on alarm conditions.

4) Reset: Normally open, momentary push button.

5) Lamp Test: Normally open, momentary push button (all lamps).

l. Dry alarm contract rated at 5 amperes, 120 volts, 60 Hz, shall be provided to represent a common alarm for the above alarm conditions. Common alarm shall connect to the Main Control Panel annunciation system.

m. Control Sequence Operation:

1) Automatic Controls:

a) Compressors to start unloaded.

b) Selected compressor shall start at 80 psig and stop at 125 psig.

c) Restart compressor when pressure drops to low limit (90 psig).

d) If pressure drops to 70 psig, low pressure alarm shall sound and standby compressor shall start.

e) Compressors shall alternate automatically after 24 hours of operation.

f) If pressure exceeds 100 psig, high pressure alarm shall be actuated.

C. Product and Manufacturer: Provide equipment as manufactured by one of the following:

1. Air Compressors:

a. Ingersoll-Rand.

b. Or equal.

2. Prefilter, Afterfilter and Air Dryer.

a. Ingersoll-Rand

b. Or equal.

D. Painting:

1. The air compressors, air receivers and auxiliary equipment shall be furnished with the manufacturer's standard paint system.

2. Field painting shall be as specified under Section 09900.

PART 2 EXECUTION

3.1 INSPECTION

A. Install equipment in accordance with the manufacturer's instructions and recommendations, and the approved Shop Drawings.

B. Installation of piping shall be in accordance with Division 15.

C. Stainless steel anchor bolts shall be installed in the air receiver foundation using a bolt layout template supplied by the compressor manufacturer.

D. Installation shall include furnishing and applying an initial supply of lubricants recommended by the manufacturer.

3.2 START-UP AND FIELD TEST

A. CONTRACTOR shall verify that the foundation, piping and equipment are compatible.

B. Make adjustments and calibrate equipment as required to place the system in proper operating condition.

C. A qualified representative of the manufacturer shall check and approve the installation before operation. He shall test and operate the system in the presence of the CONTRACTOR and verify that the equipment conforms to Specification requirements. A minimum of one 8-hour day shall be provided for this purpose. In the event of trouble with the equipment, he shall revisit the job site as often as necessary until all trouble is corrected and the installation is entirely satisfactory.

3.3 TRAINING

AS. The CONTRACTOR shall supply the services of a qualified representative of the compressor manufacturer to instruct the operating personnel in operation and maintenance of the equipment specified under this Section. A minimum of one 8-hour day shall be provided for this purpose.

END OF SECTION 15400

SECTION 15550
UNIT HEATERS - GAS FIRED

PART 1 GENERAL

1.1 SECTION INCLUDES

A. Furnish and install the gas fired unit heaters complete with accessories including room thermostat.

1.2 RELATED SECTIONS

1. Division 1, General Requirements.
2. Section 15970, Automatic Temperature Controls.
3. Section 15990, Testing, Adjusting and Balancing of HVAC Systems.
4. Section 15120 Gas Piping System.
5. Division 16, Electrical.

1.3 QUALITY ASSURANCE

A. Manufacturer's Qualifications: Manufacturer shall have a minimum of 5 years experience in producing substantially similar type equipment and shall show evidence of at least 5 installations in satisfactory operation.

B. Requirements of Regulatory Agencies: Comply with applicable provisions of regulatory agencies below and others having jurisdiction.

1. National Fire Protection Association (NFPA).
2. Underwriters Laboratories, Incorporated (UL).
3. National Electric Code (NEC).
4. National Electric Manufacturer's Association (NEMA).
5. Local and State Building Codes and Ordinances.
   a. Rhode Island State Uniform Fire Prevention and Building Code.

6. American Gas Association

C. Reference Standards: Comply with applicable provisions and recommendations of the following, except as otherwise shown or specified.

1. American Society of Heating, Refrigerating, and Air Conditioning Engineers (ASHRAE).

D. Certification:

1. A.G.A., American Gas Association

1.4 SUBMITTALS

A. Shop Drawings: Submit for approval the following:

1. Manufacturer's literature, illustrations, specifications, and engineering data including the following:

a. Dimensions, weights.

b. Capacities.

c. Materials of Construction.

d. Finishes.

2. Drawings showing fabrication methods, assembly, installation details and accessories.

B. Operation and Maintenance Data: Submit complete manuals including:

1. Copies of all Shop Drawings, test reports, maintenance data and schedules, description of operation, and spare parts information all in conformance of Division 1.

1.5 PRODUCT DELIVERY, STORAGE AND HANDLING

A. Delivery of Materials:

1. Unit heaters shall come completely assembled and protected.

2. Suction and discharge parts shall be protected against entry of foreign objects.

B. Storage of Material:

1. Store units in a clean, dry area, out of the weather.

2. Cap all pipe connections.

3. Units shall remain in crate till time of actual installation.

4. Units shall be tightly covered to protect against dirt, water, mechanical injury or chemical damage.

C. Handle to prevent damage during installation and storage.

PART 2 PRODUCTS

2.1 DESIGN CONDITIONS

A. Design conditions shall be as indicated on the equipment data on the Drawings.

B. Manufacturer: ; Provide product(s) of one of the following:

1. The Trane Company, Model (GHND.
2. Modine Manufacturing Company.
3. Sterling Gas Fired Heating Company.
4. Or equal.

2.2 DETAILS OF CONSTRUCTION

A. Casing:

1. Heavy gage steel.

2. Metal surface factory treated to prevent rust with baked enamel finish.

3. Built in adjustable discharge louvers.

4. High efficiency type, gas fired propeller fan unit heater.

5. Factory installed and wired flue vent fan.

6. Brackets with hanger holes for suspended mounting of unit.

7. Spring hangers with housed spring isolators.

B. Burner:

1. Gas fired.

2. Material: Type 409 stainless steel.

3. Design: Non clogging, slotted ports.

4. Port protector.

5. Burner assembly shall be of unitized construction with electric power operated pilot and main gas valves, spark ignition controls.

C. Heat Exchanger:

1. Construction:

a. Design: Air foil contoured tubes.

b. Material: Corrosion resistant Type 409 stainless steel.

2. Welded construction.

3. Indirect fired.

D. Fan:

1. Propeller Type: Statically and dynamically balanced.

E. Motor:

1. Single speed.

2. Single phase.

3. Built in overload protection.

4. Factory mounted and wired.

5. Mounted with vibration isolators.

6. Totally enclosed.

F. Efficiency:

1. 80% minimum.

G. Controls:

1. Factory wired and mounted.

a. High limit switch.

b. Ignition transformer and spark ignition controller.

c. Unit mounted disconnect switch.

d. Safety shutdown, 24 volt gas valve with 100 percent safety pilot and main gas valve shutoff.

e. Manual shut off valve on gas line.

f. Fan controls, fan time delay switch.

g. Gas pressure regulator.

h. Leak limiting device.

i. 120 V/24V transformer as required.

2. Field Installed:

a. Low voltage room thermostat, shipped loose by gas heater manufacturer for field mounting.

b. 24 volt AC.

c. 56 F to 94 F temperature setting range.

d. Fan auto-on (summer/winter) switch.

3. Sequence of Operation:

a. Refer to Contract Drawing (Sheet H-1).

H. Draft

1. Construction: Heavy gauge steel.

I. Spring Hangers:

1. Housed Spring Mountings:

a. Type: Spring isolator, free standing, laterally stable with housing.

b. Efficiency: 95 percent at rated load.

c. Construction:

1) Housing: Shall include vertical limit stops.

2) Clearance: Maintain 1/2-inch clearance around restraining bolts and between housing and spring.

3) Baseplate with 1/4-inch acoustical friction pad between baseplate and support.

4) Leveling bolts rigidly bolted to the equipment.

5) Spring diameter 0.8 of the compressed spring height at rated load.

6) Minimum spring deflection before becoming solid shall be at least 50 percent greater than the specified minimum deflection.

d. Total rated capacity of isolators shall be at least 150 percent the wright of equipment supported. CONTRACTOR to verify the actual weight of the equipment to be supported.

e. Housings, fabricated steel parts, accessories and springs for isolators to be completely neoprene coated.

f. Manufacturers:

1) Provide isolation equipment of one of the following:

a) Mason Industries.

b) Vibration Eliminator Company.

c) Or equal.

g. Provide stainless steel hanger rods and hardware. Minimum size to be 1/2-inch diameter.

PART 3 EXECUTION

3.1 INSPECTION

A. Inspect units for damage prior to installation and correct if necessary as recommended by manufacturer.

3.2 INSTALLATION

A. Install units level and plumb.

B. Install units in accordance with details on the Drawings, approved Shop Drawings and as instructed by manufacturer.

C. Coordinate with General Contractor for location and structural supports for unit installation.

D. Coordinate with Plumbing Contractor for gas supply line connection and with Electrical Contractor for electrical power supply.

3.3 CLEANING

A. Clean tar, cement or other dirt from units.

B. Remove debris and other waste material resulting from installation.

3.4 ADJUSTMENTS

A. Set air deflectors for proper air delivery.

B. Check power supply and remote thermostat controls.

END OF SECTION 15550

SECTION 15750
PACKAGED AIR CONDITIONING UNITS - THRU WALL, ROOM TYPE

PART 1 GENERAL

1.1 SECTION INCLUDES

A. Furnish and install a packaged, thru the wall air conditioning unit HVAC-1A complete with electric heat, motors, starters, sleeves, all controls and appurtenances including installation kits for proper operation and to comply with requirements.

1.2 RELATED SECTIONS

1. Division 1, General Requirements.

2. Section 15990, Testing, Adjusting and Balancing of HVAC Systems.

3. Division 16, Electrical.

1.3 QUALITY ASSURANCE

A. Manufacturer's Qualifications: Manufacturer shall have at least 5 years experience in producing similar type equipment and shall show evidence of at least 5 installation in satisfactory operation.

B. Requirements of Regulatory Agencies: Comply with applicable provisions of regulatory agencies below and others having jurisdiction:

1. Permits: CONTRACTOR shall obtain and pay for all required permits, fees and inspections by authorities having jurisdiction.

2. Local and State Building Codes and Ordinances.

   a. Rhode Island State Uniform Fire Prevention and Building Code.

   b. Rhode Island State Energy Conservation Code.

3. Underwriters' Laboratories, Inc.

4. National Fire Protection Association.

5. Air-Conditioning and Refrigeration Institute

C. Reference Standards: Comply with the applicable provisions and recommendations of the following, except as otherwise shown or specified.

1. Air Conditioning and Refrigeration Institute Standards No. 210 and 270.

2. Underwriters' Laboratories Listed.

D. Source Quality Control: Perform the following shop tests and inspections at the factory:

1. Coils shall be pneumatically leak tested under water at 200 psig.

2. Fan wheels and shafts shall be statically and dynamically balanced.

3. Refrigeration system and controls shall be tested prior to shipment.

1.4 SUBMITTALS

A. Shop Drawings: Submit for approval the following:

1. Manufacturer's literature, illustrations, specifications and engineering data to include the following information:

a. Dimensions and weight.

b. Capacities and performance data.

c. Wiring and control diagrams.

d. Materials of construction.

e. Finishes, color charts, Manfacturer's Standard and Optional colors for selection by the OWNER.

f. Mounting details.

g. Deviations from Drawings and Specifications.

B. Operation and Maintenance Data:

1. Operation and Maintenance Manuals in conformance with Division 1 including copies of all approved Shop Drawings shall be submitted for approval by the CONTRACTOR and for use by the OWNER.

C. Test Reports: Submit the following test certifications for approval.

1. ARI Label.

2. UL Label.

1.5 PRODUCT DELIVERY, STORAGE AND HANDLING

A. Delivery of Material:

1. Units shall be protectively crated.

B. Storage of Material:

1. Store units in a clean, dry area, out of the weather.

2. Cap all connections.

3. Units shall remain in original crate till time of actual installation.

4. Units shall be tightly covered to protect against dirt, water, mechanical injury or chemical damage.

1.6 JOB CONDITIONS

A. Protection:

1. Wall openings and penetrations shall be covered to prevent rain and snow from entering building prior to installation of units.

2. It shall be the CONTRACTOR's responsibility to verify location and dimensions of wall openings and coordinate any necessary modifications required for installation of the unit.

PART 2 PRODUCTS

2.1 THROUGH THE WALL AIR CONDITIONING UNIT HVAC-1A

A. Product and Manufacturer: Provide products of one of the following:

1. Carrier Corporation.
2. Freidrich Air Conditioning and Refrigeration Company.
3. Or equal.

B. Unit capacity shall be as shown on the Drawings.

C. Type:

1. Self contained.
2. Through the wall installation.
3. Factory assembled and wired, R-22 refrigeration charge and all controls.
4. Electric heat.

D. Construction:

1. Cabinet:

a. 18 gage minimum galvanized steel.

b. Slide-out chassis.

c. Removable front panel 18 gage minimum.

d. Continuous bar stock or extruded discharge grille, coordinate size of grille with existing openings.

e. Front mounted access panel for controls operators.

f. Sub-base with return air grille.

2. Evaporator Fan:

   a. Forward curved, centrifugal type.

   b. Aluminum construction.

   c. Direct connected with motor.

   d. Solid state fan speed control.

3. Compressor:

   a. Hermetically sealed.

   b. Split capacitor type with thermal overloads, high-low pressure cutouts.

   c. Externally and internally insulated against vibration.

   d. Refrigerant control down to 35 F outdoor ambient.

4. Condenser Coil:

   a. Direct drive propeller type.

5. Condenser Coil:

   a. Seamless copper tube with mechanically bonded aluminum fins.

   b. "Evaporating condensate" coil design.

6. Evaporator Coil:

   a. Seamless copper tube with mechanically bonded aluminum fins.

7. Filters:

   a. Throwaway.

   b. Slide-in.

   c. "No tool" removal.

8. Exterior Louver Grille:

   a. Heavy gauge extruded aluminum.

   b. Anodized finish.

   c. Removable from outside.

9. Motors:

   a. Permanent split capacitor type.

   b. Direct drive.

10. Drain Pan:

   a. Insulated galvanized steel.

   b. With threaded pipe connection.

11. Finish:

   a. Cabinet: Factory coated with Acryglas or equal corrosion resistant paint.

   b. Front Panel: Color to be selected by OWNER from color charts submitted.

   c. Interior Component: Baked-on enamel finish.

12. Wall Sleeve:

   a. Dry type.

   b. Field fabricated, 16 GA. galvanized steel.

   c. Gasket and/or caulk between AC unit and inside wall sleeve.

   d. Firmly secure wall sleeve to wall.

   e. CONTRACTOR to coordinate physical dimensions with actual furnished A.C. unit.

13. Heating:

    a. Electric resistance heating coil.

    b. Factory installed and wired for controls.

14. Accessories:

    a. Sub-base.

    b. Manual damper for outside air control.

E. Controls:

1. General:

    a. Factory wired.

    b. Self contained.

2. Components:

    a. Solid state fan speed control knob.

    b. Heat-off-cool switch, fan-high, fan-low, cool-high, and cool-low switching.

    c. Adjustable thermostat control for cooling and heating.

    d. Prewired refrigerant controls.

3. Operation:

    a. Roomside fan runs continuously.

    b. "Cool" position controls internal refrigeration controls and condenser fan operation in response to unit mounted, factory installed and wired thermostat.

    C. "Heat" position controls electric heating element thru thermostat.

2.2 TOOLS AND SPARE PARTS

A. Spare Parts:

1. One spare set of replacement filters.

2. A can of touch up paint (one quart).

PART 3 EXECUTION

3.1 INSPECTION

A. Check wall opening for correct fit.

B. Do not proceed with installation of units until wall sleeves conform to specification requirements.

3.2 INSTALLATION

A. Mount units as detailed and as recommended by unit manufacturer.

B. Anchor each unit sub-base to floor.

3.3 ADJUSTMENT AND CLEANING

A. Remove all debris, waste materials, and loose foreign matte from interior of unit prior to starting fans.

B. Clean tar, dirt or marks from exterior of unit.

C. Adjust all controls for proper settings.

D. Touch up al chips and scratches in factory finishes with materials and colors approved by the manufacturer.

END OF SECTION 15750

SECTION 15821
DEHUMIDIFIER

PART 1 GENERAL

1.1 SECTION INCLUDES

A. Furnish and install the dehumidifier unit for the vapor phase treatment system.

1.2 RELATED SECTIONS

A. Section 15880 - Ductwork and Accessories

1.3 REFERENCES

A. ANSI/ARI 410 - Forced-Circulation Air-Cooling and Air-Heating Coils.

B. SMACNA - HVAC Duct Construction Standards, Metal and Flexible.

1.4 SUBMITTALS

A. Shop Drawings: Indicate general assembly, dimensions, weights, and materials.

B. Product Data: Provide catalog data indicating general assembly, dimensions, weights, materials, and certified performance ratings.

C. Manufacturer's Installation Instructions: Indicate assembly and setting operations.

1.5 OPERATION AND MAINTENANCE DATA

A. Operation Data: Include assembly instructions, adjustments, and electrical requirements.

B. Maintenance Data: Include instructions for lubrication filter replacement, cleaning and spare parts lists.

PART 2 - PRODUCTS

2.1 MANUFACTURERS

A. Provide a dehumidifier by one of the following:

1. Chromalox Model ADH-020
2. or Equal

2.2 MANUFACTURED UNITS

A. Units: Factory assembled consisting of casing, heating elements, controls and support element.

B. Performance: 2000 CFM at 100% relative humidity. Relative humidity shall be lowered to about 50%.

C. Minimum No. of Elements: 9.

D. Voltage: 460V, 3 phase.

PART 3 - EXECUTION

3.1 INSTALLATION

A. Install in accordance with manufacturer's instructions.

B. Install in ducts or casings in accordance with SMACNA HVAD Duct Construction Standards, Metal and Flexible.

C. Insulate exterior of unit as specified for ductwork. Refer to Section 15880.

END OF SECTION

SECTION 15850
MAKE-UP SUPPLY AIR AND CIRCULATION FANS

PART 1 GENERAL

1.1 SECTION INCLUDES

A. Furnish and install seven packaged propeller make-up air fan complete with accessories.

1.2 RELATED SECTIONS

1. Division 1, General Requirements.
2. Section 15970, Automatic Temperature Controls.
3. Section 15990, Testing, Adjusting and Balancing.
4. Division 16, Electrical.

1.3 QUALITY ASSURANCE

A. Requirements of Regulatory Agencies: Comply with applicable provisions of regulatory agencies below and others having jurisdiction.

1. National Fire Protection Association.
2. Underwriters' Laboratories, Incorporated.
3. National Electric Code.
4. National Electric Manufacturers Association.
5. Local and State Building Codes and Ordinances.
   a. The BOCA National Building Code.
   b. The BOCA National Mechanical Code.
   C. Rhode Island Basic Building Code.

B. Reference Standards: Comply with applicable provisions and recommendations of the following, except as otherwise shown or specified.

1. Air Moving and Conditioning Association (AMCA) Standard: 210-85 and 300.

C. Source Quality Control: Perform following tests and inspections at factory:

1. Fan blades shall be statically and dynamically balanced.1

1.4 SUBMITTALS

A. Shop Drawings: Submit for approval the following:

1. Manufacturer's literature, illustrations, specifications and engineering data showing:

a. Dimensions.

b. Materials of construction.

c. Mounting details.

d. Performance Data: AMC approved fan curves, for each model specified.

e. Weights.

f. Prefabricated curb details.

g. Deviations from Contract Drawings and specifications.

B. Test Reports: Submit the following test certifications for approval.

1. AMCA Label.

2. UL Label.

C. Operation and Maintenance Manuals:

1. Submit complete installation, operation and maintenance manuals including copies of all Shop Drawings, test reports, maintenance data and schedules description of operation, and spare parts information.

2. Furnish operation and maintenance manuals in conformance with the requirements of Division 1.

1.5 PRODUCT DELIVERY, STORAGE AND HANDLING

A. Store to keep material clean and free from damage.

B. Handle to prevent damage during installation and storage.

PART 2 PRODUCTS

2.1 EQUIPMENT

A. Product and Manufacturer: Provide fans as manufactured by one of the following:

1. American Coolair Corporation.

2. Penn Ventilator Company, Type Muffan-Filtered Makeup Air Fan.

3. Or equal.

B. Propeller Supply Fan:

1. Style: Wall mounted. Air supply package.

C. Construction:

1. Heavy gage (16 gage minimum) galvanized steel housing with galvanized steel angle reinforcements.

2. Resilient mounted motor.

3. Motor bearings permanently lubricated with sealed ball bearings.

4. AMCA and UL certified labels.

5. Wall Sleeve.

6. Inlet screen type fan guard.

7. Manually adjustable variable speed controller.

D. Motor:

1. Type: Single speed, high efficiency.

2. Enclosure: Totally enclosed, single-phase 115 volt

3. Horsepower:

a. Motor to be non-overloading at any point on operating curve of supply fan.

b. Motor shall be of sufficient size for rated horsepower capabilities.

4. Mounting: Motor to be end-mounted.

5. Bearings: Permanently lubricated.

E. Drive:

1. Direct drive.

F. Coatings:

1. Standard factory applied coating.

PART 3 EXECUTION

3.1 INSPECTION

A. Examine wall opening for proper size before installation of fan wall sleeve.

3.2 INSTALLATION

A. Install supply fan in accordance with manufacturer's installation instructions. CONTRACTOR to coordinate for wall penetration.

B. Anchor to wood panel wall with lag screws or bolts.

3.3 TESTING AND ADJUSTING

A. Start unit and observe for excessive noise or vibration.

3.4 CLEANING

A. Remove all debris and waste materials resulting from installation.

B. Clean tar, dirt and marks from exterior of units.

C. Touch up all chips in factory finishes.

END OF SECTION 15850

SECTION 15880
DUCTWORK AND ACCESSORIES

PART 1 / GENERAL

1.1 SECTION INCLUDES

A. Scope:

1. Furnish and install complete duct systems with all appurtenances required for proper operation.

1.2 RELATED SECTIONS

1. Division 1, General Requirements. Section 15H51.
2. Make-Up Supply and Circulation Fans.
3. Section 15990, Testing, Adjusting and Balancing of HVAC Systems.

1.3 QUALITY ASSURANCE

A. Manufacturer's Qualifications: Manufacturer shall have experience in the production of substantially similar equipment, and shall show evidence of satisfactory operation in at least 5 installations.

B. Requirements of Regulatory Agencies: Comply with the applicable provisions of regulatory agencies below and others having jurisdiction.

1. Local and State Building Codes and Ordinances.
2. Underwriters' Laboratories, Incorporated.
3. National Fire Protection Association.

C. Reference Standards: Comply with applicable provisions and recommendations of the following, except as otherwise shown or specified. Specific provisions of this Contract shall supersede the Standards in case of conflict:

1. American Society of Heating, Refrigerating and Air Conditioning Engineers (ASHRAE).
2. Sheet Metal and Air Conditioning Contractors National Association (SMACNA).
   a. HVAC Duct Construction Standards.

D. Field Measurements: Take field measurements where required prior to installation to ensure proper fitting of Work.

1.4 SUBMITTALS

A. Shop Drawings: Submit for approval the following:
1. 1/4-inch scale duct layouts.
2. Dimensions.
3. Details of construction.
4. Details of installation, hanger details and spacing.
5. Manufacturer's literature, illustrations, specifications and engineering data.
6. Screens.
7. Backdraft dampers.
8. Flexible connections.
9. Other technical data related to the specified material and equipment as requested by Engineer.
10. Duct sealants.
11. Deviations from Drawings and Specifications.

1.5 PRODUCT DELIVERY, STORAGE AND HANDLING

A. Store equipment and materials so as to keep free from moisture, damage, and deterioration.

1.6 GENERAL REQUIREMENTS

A. The Drawings accompanying these Specifications show the general arrangement and extent of work to be done, but the exact location and arrangement of all parts shall be determined as the work progresses, to conform in the best possible manner with its surroundings; the exact location of all parts of the work must be governed by the general building plans and the actual building conditions.

B. The Drawings are intended as an indication of the arrangement of equipment, ducts, valves, etc., and are as nearly correct as can be determined in advance of the actual construction of the Work. It must however, be understood that the piping, equipment, ducts, etc. found to interfere with the construction of the building, plumbing apparatus and piping, electrical wiring or other obstructions, etc., must be changed in location to clear such obstructions, without additional charge.

C. The connections indicated to the various units are particularly intended as an indication only. The actual connections at the time of installation to be made and arranged as to fully and best suit the requirements of each particular case, adequately provide for expansion and perfect circulation and minimize the amount of space required for the same.

D. The Drawings show the general arrangement of all systems. Should local conditions necessitate rearrangement of one or more of the systems, or if piping or ductwork can be run to better advantage and at the same time accomplish as good or better results, Contractor, before proceeding with the Work, shall prepare and submit complete drawings showing all details of the proposed rearrangement for written approval.

E. The Drawings preclude indicating thereon, all offsets, fittings, accessories and details which may be required. Contractor shall carefully examine all of the General Construction, Electrical, Mechanical, Structural and other Drawings and the respective Specifications for conditions which may affect the installation of his work, and shall arrange his work accordingly,

furnishing all required items to meet such conditions which are not specified as work "by others", to complete the systems to the true extent of the Drawings and Specifications.

PART 2 - PRODUCTS

2.1 DUCTWORK

A. Materials:

1. Aluminum (with 3003 ductwork H-14 alloy and temper):
   a. Aluminum sheetmetal minimum nominal thickness (B&S Gage):
      1) Sizes to 12 inch: 24 gage.
      2) Sizes between 13 inch to 30 inch: 22 gage.
      3) Sizes between 31 inch to 48 inch: 20 gage.
      4) Sizes between 49 inch to 60 inch: 18 gage.
      5) Sizes above 61 inch: 16 gage.
      6) All outdoor located ductwork shall be 16 gage.
   b. Ductwork for the following system:
      1) All ductwork related to exhaust fans EF-1 thru 3, TF-1.
      2) Vapor-phase activated carbon system.
   c. All hangers supports and fasteners for aluminum ductwork shall be galvanized steel except supports for ductwork located outdoor shall be Type 316L stainless steel.

B. Construction: Conform to SMACNA (Sheetmetal and Air Conditioning Contractors' National Association, Inc.) Standards.

1. All sheet metal duct, plenum and casing construction shall conform to the pressure classifications shown on the Drawings and shall be in accordance with the construction details and installation details in the latest edition of the SMACNA HVAC Duct Construction Standards. This standard is hereinafter referred to as HVAC DS.
2. Rectangular duct construction alternatives selected by the Contractor from HVAC DS tables and shall be identified by duct

system and shall be submitted in schedule form to the contracting authority prior to beginning installation of ductwork.

3. Hanger rods shall be minimum 3/8 inch for all ducts with half perimeter up to 72 inches, and 1/2 inch diameter for all -ducts with half perimeter larger than 72 inches. A pair of rods shall be provided at each duct support point. Maximum hanger spacing shall be 8 feet for ducts with half perimeter up to 72 inches and 6 feet for ducts with half perimeter larger than 72 inches. Hanger Construction and installation shall conform to SMACNA Standards, except as specified.

4. Stiffener angles shall be of the following sizes and spaced as follows:

   a. Ducts up to 42-in in either dimension 1-1/2 x 1-1/2 x 1/8-in angles, 4-ft 0-in on centers.

   b. Ducts 43-in and above in either dimension 2-in x 2-in x 1/4-in, 4-ft 0-in on centers.

C. Leakage:

1. Not to exceed 5 percent.

D. Weatherproof: 16 gauge regardless of size.

E. Sleeves: Where ductwork passes through masonry walls, partitions or floors provide 18 gauge, galvanized steel sleeve and caulk airtight with fire resistant sealant between sleeve and ductwork.

2.2 ACCESSORIES

A. Belt Guards:

1. Reference: OSHA.
2. Construction: Expanded hinged steel or hinged sheet steel for weather protection where required.
3. Size: Fabricate guards to receive 2-inch larger pulleys without alteration to the guard.
4. Trim openings at shafts for tachometer readings.

5. Motor shaft opening to be slotted for belt adjustment.
6. Secure guards to driven machine or foundation (not to motors).

B. Access Doors:
1. Reference: SMACNA Standards.
2. Type: Gasketed cam lock covers.
3. Materials: Same as duct.

C. Flexible Connections: (For fans):
1. Reference: SMACNA Standards for pressure classification of 3 inches water gage.
2. Material:
   a. Minimum 1/16-inch thick, 6-inch wide reinforced fabric neoprene sheet.
   b. 0.080 gauge, 3-inch wide aluminum strip.

D. Screens: 1/2 inch (13 mm) mesh, aluminum screen with frame and bolt holes for mounting.

E. Gravity Backdraft Dampers:
1. Construction:
   a. Multiple, interlocked blades mounted in frame.
   b. Felt gasketed blade edges.
   c. Stainless steel or brass bearings.
   d. Tie rod connecting each blade.
   e. Counterweights or adjustable spring attached to tie rods.
   f. Aluminum frame and blades.
2. Materials:
   a. Blades: Aluminum 0.020 gage.
   b. Tie Rod: Aluminum 0.081 gage.
   c. Louver Arm: Aluminum 0.081 gage.
   d. Bumpers: Waterproof felt.

F. Prefabricated Roof Curb:

1. Weatherproof, continuous welded minimum 14 gage aluminum construction.
2. Insulated with 1-1/2 inch minimum rigid board fiberglass.
3. 45 degree canted type sides.
4. Provide curb with gasket as per "C" above and wood blocking to mount curb. Provide flashing and counter flashing at curb as required to make watertight installation.
5. Twelve inch minimum curb height measured from finished roof to top of pressure treated wood nailer.
6. Curb to Roof Deck Fasteners: Type 316 stainless steel lag screws and bolts.

PART 3 - EXECUTION

3.1 INSTALLATION

A. All ductwork shall conform accurately to the dimensions shown, the ducts shall be straight and smooth inside with joints neatly finished; ductwork shall be installed so as to preclude the possibility of vibration under all operating conditions.

B. Tape and seal all joints as per SMACNA Standards.

C. Elbows shall have a minimum centerline radius of 1-1/2 times the width of the duct.

D. Provide flexible connections at inlet and discharge of air handling equipment connecting to ductwork.

E. Provide access doors for all dampers for inspection and maintenance.

F. Install all ductwork and accessories to provide a system free from buckling, warping breathing or vibration.

G. All ductwork shall be suitably supported as per SMACNA Standards.

H. All ducts at flexible connections with duct fans shall be supported at free end within 12 inches of flexible connection.

I. Provisions shall be made for supporting all ductwork, dampers, and other ductwork accessories, where necessary.

3.2 ADJUSTMENT

A. Set volume control devices for approximate positions in preparation for final testing and balancing.

B. Start fan system and check for excessive leaks and vibration and correct.

3.3 CLEANING

A. Remove all loose materials and obstructions from interior of ducts.

B. Remove debris and waste materials resulting from installation.

END OF SECTION

SECTION 15970
AUTOMATIC TEMPERATURE CONTROLS

PART 1 GENERAL

1.1 SECTION INCLUDES

A. Furnish and install an electric/electronic system of automatic temperature controls complete with all appurtenances.

1.2 GENERAL

1. Descriptions contained hereinafter are for guidance and to show the functions desired. They do not describe or specify all components required to interface equipment. All parts and equipment necessary to meet functional requirements shall be provided.

2. The control system manufacturer shall be completely responsible for the proper operation and functions of all control systems herein specified. He shall be responsible for coordination of all interfaces with other contractors to achieve the required control operation.

1.3 RELATED SECTIONS

1. Division 1, General Requirements.

2. Section 10200, Louvers.

3. Section 15550, Unit Heaters - Gas Fired.

4. Section 15750, Packaged Air Conditioning Units - Thru Wall, Room type.

5. Section 15850, Make-up Supply Air Fans.

6. Section 15990, Testing, Adjusting and Balancing of HVAC Systems.

7. Division 16, Electrical.

D. Products Furnished Under This Section:

1. 24 volt AC low voltage wiring and conduit.

2. Actuators for operable louvers.

3. Thermostats with subbase, HOA switches.

4. Smoke detectors.

5. Transformers where specified or required.

6. Mounting accessories, face plates, junction boxes for smoke detectors, thermostats, etc.

E. Products Furnished Under Other Sections:

1. 480 volt, and 120 volt wiring and conduit (Division 16).

2. Starters unless specified (Division 16).

3. HOA switch (Division 16).

4. Interlock wiring (Division 16).

5. Operating louvers (Section 10200).

6. Gas piping (Section 15120).

1.4 QUALITY ASSURANCE

A. Standards of Workmanship: All material, equipment and installation shall be in strict accordance with requirements of Division 16, Electrical.

B. Manufacturers Qualifications: Manufacturer shall have a minimum of 5 years experience in producing substantially similar equipment and shall show evidence of at least 5 installations in satisfactory operation.

C. Requirements of Regulatory Agencies: Comply with applicable provisions of regulatory agencies below and others having jurisdiction.

1. Underwriters' Laboratories, Incorporated.

2. National Fire Protection Association.

3. Local and State Building Codes and Ordinances.

a. Rhode Island Uniform Fire Prevention and Building Code.

b. Rhode Island Energy Conservation Code.

D. Reference Standards: Comply with the applicable provisions and recommendations of the following, except as otherwise shown or specified.

1. National Electric Code.

2. Standards of National Electric Manufacturers Association.

3. Institute of Electrical and Electronic Engineers.

4. Instrument Society of America (ISAL).

5. Joint Industrial Council (JIC).

E. Required Manufacturer's Services:

1. Furnish a qualified representative of the manufacturer to supervise or perform the following services.

a. Installation of the various control systems specified under this Section.

b. Initial startup of the various systems.

c. Placing the systems in fully automatic operation.

d. Final testing of the control systems.

1.5 SUBMITTALS

A. Ship Drawings: Submit for approval the following:

1. Manufacturer's literature, illustrations, specifications, and engineering data to include the following:

a. All items of equipment furnished under this Section.

b. Wiring diagrams shall conform to JIC standards.

c. Sequence of operation description.

2. Drawings showing fabrication methods, assembly, installation details and accessories.

B. Operation and Maintenance Data: Submit complete manuals including:

1. Copies of all Shop Drawings, test reports, maintenance data and schedules, description of operation, and spare parts information, all in conformance with Division 1.

PART 2 PRODUCTS

2.1 DESIGN CONDITIONS

A. Manufacturer: Provide product(s) of one of the following:

1. Honeywell Incorporated.

2. Johnson Service Company.

3. Barber Colman Company.

4. Or equal.

2.2 THERMOSTATS

A. Type: Electric, across the line. 120V, 1Ø, 60 Hz, Room Thermostat (For Exhaust Fans):

1. Heavy duty type.

2. Integral thermometers

3. Adjustable set points.

4. Contacts shall have proper ampere rating for intended use.

5. With locking cover.

6. Subbase with auto-Off-On Switch for manual switching.

7. Honeywell T6051A Thermostat with Q651A subbase or equal.

B. Low Voltage Room Thermostats with Summer/Winter Switches (for gas Fired Unit Heaters):

1. Furnished by gas fired unit heater manufacturer. Refer to specification Section 15H32.

2.3 ACTUATORS - FOR OPERABLE LOUVERS (LM-1 thru 4)

A. Type: Electric, Spring Return; Two Position

1. Oil immersed gear train

2. Line voltage (120 V.A.C.) with unit mounted low voltage control transformer.

3. Mechanical spring shall return actuator to normal position when deenergized.

4. Sufficient torque to operate louver furnished.

5. Two position, power to open, spring return to close.

2.4 SMOKE DETECTORS

A. Duct Mounted: (SD-1, SD-2 & SD-3):

1. Onization type.

2. Cross sectional sampling tube.

3. Two contacts, one open, one closed.

4. Contact Rating: 120 VAC, 2 ampere.

5. Voltage: 120 Volt AC, 120V AC wiring kit.

6. Temperature Range: 32 F to 120 F.

7. Humidity Range: 15 percent to 93 percent.

8. Product and Manufacturer:

a. System Sensor, Division of BRK Model DH 400 ACDC.

b. Electro Signal Lab, Inc., Series 609.

c. Or equal.

B. Smoke detector installation to conform with NFPA 90A and 72E requirements.

25. NAMEPLATES

A. White laminated phenolic plastic with minimum 3/16 inch high black engravings.

B. Nameplates shall be affixed with stainless steel rivets or screws.

C. Nameplates shall be provided at all thermostats, smoke detectors and control switches, providing information on unit being controlled.

PART 3 EXECUTION

3.1 INSTALLATION

A. Thermostats shall be installed 5 feet above finished floor.

B. Where thermostats must be located on exterior walls, provide an insulating mounting panel.

C. Where operable louvers or dampers are shown on the Drawings furnish sufficient motors to operate the operable louver or damper.

3.2 PERFORMANCE

A. Sequence of system operation shall be as indicated on the control diagrams and as described on Contract Drawings (refer to Sheet H-1).

3.3 ADJUSTMENT AND TESTING

A. Adjust all system components for specified operation.

B. Test each control system for proper operation.

END OF SECTION 15970

SECTION 15980

INSTRUMENTATION AND CONTROLS

PART 1 GENERAL

1.1 SECTION INCLUDES

A. Provide and Install flow meters, pressure gauges, switches transmitters, protectors, temperature gauges, switches and transmitters, level sensors and switches, programmable logic controller and control panel

1.2 RELATED SECTIONS

A. Section 11340 - SVE

B. Section 15975 - Direct Digital Control Systems.

1.3 REFERENCES

A. ASME B40.1 - Gages - Pressure Indicating Dial Type -Elastic Element.

B. ASTM E1 - Specification for ASTM Thermometers.

C. FS-GG-G-76 - Gages, Pressure and Vacuum, Dial Indicating (for Air, Steam, Oil, Water, Ammonia, Chloro- Fluorohydrocarbon Gases, and Compressed Gases).

1.4 SUBMITTALS

A. Submit under provisions of Section 01300.

B. Product Data: Include list which indicates use, operating range, total range and location for manufactured components.

C. Submit manufacturer's installation instructions under provisions of Section 01300.

1.5 PROJECT RECORD DOCUMENTS

A. Submit documents under provisions of Section 01700.

B. Accurately record actual locations of instrumentation.

1.6 ENVIRONMENTAL REQUIREMENTS

A. Do not install instrumentation when areas are under construction, except for required rough-in, taps, supports and test plugs.

1.7 FUNCTIONAL DESCRIPTION

A. General SVE Control System

The SVE Control system will include several independent but interrelated control functions and circuits as described below. A main SVE panel will provide control function to all major SVE system components, and will integrate and interlock the functions of the separate Thermal/Catalytic Oxidation System (Thermox) control panel. Major system components will be provided with Manual-Off-Automatic selector switches to facilitate maintenance, troubleshooting and calibration.

The SVE equipment shelter will be partitioned into potentially hazardous [explosion-proof] and non-hazardous areas by means of a sealed partition wall and forced air ventilation; positive pressure on the non-hazardous side and negative pressure on the potentially hazardous side. The main SVE control panel will be located in the non-hazardous side, and will connect to intrinsically safe or explosionproof components through suitably sealed conduit which passes through the partition into the potentially hazardous side.

The Thermox unit will be installed outside and adjacent to the equipment shelter. The Thermox unit control panel will have an air purge system and interlock which will prevent the system from being operated until the panel interior has been suitably purged.

Operation of the Thermox is a prerequisite for automatic operation of the SVE system components. A shut-down alarm condition in the Thermox will shut-down the SVE and conversely, any shut-down alarm condition in the SVE will shut-down the Thermox unit.

B. Thermal/Catalytic Oxidizer

The Thermox system is supplied with its own control panel which is interlocked with the main SVE control system. The Thermox system must go through an air purge cycle and achieve an initial operating temperature [140^{0}F] before it will allow the SVE to start-up or operate automatically. The SVE system will not operate automatically unless/until the Thermox unit has been started and is operating normally. Start-up interlocks are as follows:

Purge Air Supply: The control panel must be air pressurized for 20 minutes

Start-Up Temperature

Sensor: 140°F setpoint must be reached before SVE receives a start-up signal

The Thermox system provides a high temperature control signal [pre-alarm conditions], to open a dilution air valve, thereby cooling the combustion chamber temperature by reducing inlet VOC concentrations and inlet gas BTU contribution, and preventing a high temperature [alarm] shutdown as follows:

High Temperature [Dilution Air] Sensor: 1400°F setpoint [1200°F when using catalyst] will activate a signal to the dilution air valve.

The Thermox system has several shutdown alarm conditions, each of which will signal shutdown of the SVE system.

CONDITION	SETTING/FUNCTION
High Temperature Shutdown Control:	1450°F setpoint for Thermal [1250°F setpoint for Catalytic]
High/Low Gas Pressure:	<6" water column >23" of water column
Power Interruption	
Flame failure	
Air Supply Failure, combustion blower	

C. SVE Vacuum Blower and Vapor Extraction Tank System

1. SVE Vacuum Blower

A positive-displacement rotary, lobe-type vacuum blower will used to extract soil vapor from the extraction wells and to discharge the extracted vapor to the Thermox system. The SVE vacuum blower will be operated by an AUTO-OFF-MAN three position selector switch, START, STOP and EMERGENCY STOP pushbutton controls. In the AUTO mode the SVE blower START pushbutton will activate the vacuum blower holding circuit, which will not start the vacuum blower until the Thermox [activated and having reached operating temperature] provides a start signal. The STOP and an "EMERGENCY STOP" pushbutton will deactivate the SVE system and deactivate the "Start" holding circuit.

The SVE vacuum blower can be operated in the MAN mode for troubleshooting and maintenance purposes. In the MAN mode, the START pushbutton will activate the blower holding circuit, and the vacuum blower will run independently of all interlocks except the motor overload, the vapor extraction tank high-high level and the blower discharge high temperature alarms. The STOP or an "EMERGENCY

STOP" pushbutton will Stop the SVE system and deactivate the "Start" holding circuit.

The OFF position disengages all control signals to the vacuum blower so that it will not operate.

The SVE system has several shutdown alarm conditions, all of which will also signal shutdown of the Thermox system.

CONDITION	SETTING/FUNCTION
Blower Inlet Vacuum High:	>11.5in Hg. vacuum shutdown
Dilution Air Manifold Vacuum:	>10.5in Hg. vacuum relief
Blower Discharge Pressure High:	>2 PSIG shutdown
Discharge Temperature High:	>200^{0}F shutdown
Vapor Extraction Tank:	High-High Liquid Level shutdown
Vacuum Blower Motor Overload:	Motor starter interlock
Discharge Pump(s) Overload*:	Motor starter interlock

* Note: Depending on operational mode, backup pump may operate in the event of duty pump overload and not shutdown the system.

The Vacuum blower discharge to the Thermox unit will be fitted with a pressure and flow measurement and transmitting device, which will provide a 4 to 20 ma signal to the PLC, which will record the operational flows and pressures.

2. Vapor Extraction Tank

The vapor extraction tank provides a pneumatic vacuum reservoir for the vapor extraction manifold, and it functions as a knockout/receiver tank for removal of water droplets, condensate and particulates which may be entrained in the incoming vapor flow from the extraction well riser. Liquid level sensors in the vapor extraction tank will control the automatic discharge of accumulated water from the vapor extraction tank to the water extraction manifold, and will shutdown the SVE vacuum blower in the event of a high high level condition in the vapor extraction tank (otherwise the vacuum blower is designed to operate continuously).

CONDITION	SETTING/FUNCTION
Vapor Extraction Tank:	High level - OPEN tank drain solenoid valve Low level - CLOSE tank drain solenoid valve High-High level VES vacuum blower shutdown

3. Vapor Extraction Manifold

The vacuum in the Vapor Extraction Tank is connected to the vapor extraction manifold, where it is delivered to each of the four extraction wells, on demand (separate sensors and circuits control the function of each well).

Each well connection to the vapor extraction manifold will include a check valve, flow control valve, sight glass and solenoid valve.

Each vapor extraction solenoid valve will be operated by an AUTO-CLOSE-OPEN three position selector switch. In the AUTO mode, the solenoid valve will be automatically controlled by the level sensor in the extraction well as described in the EXTRACTION WELL functional description. The CLOSE and OPEN modes will manually control the vapor extraction solenoid valve for maintenance and troubleshooting purposes.

The Vapor Extraction Manifold will be fitted with a manual dilution valve, an automatic dilution valve and a vacuum relief valve [set for 10 in Hg. vacuum], all piped in parallel through a common air inlet filter. The automatic dilution air valve will be controlled by a signal provided by the Thermox high temperature sensor, as described in the Thermal/Catalytic Oxidizer functional description above. The manual dilution air valve will be used for start-up, maintenance and troubleshooting.

The Vapor Extraction Manifold will also be fitted with a connection to the air purge vacuum pump discharge from the Water Extraction Tank System.

D. Water Extraction Pumps and Water Extraction Tank System

1. Water Extraction Pumps

Dual progressive-cavity positive-displacement pumps will be used to extract water from the extraction wells and discharge the extracted water to the groundwater treatment system No. 2 Equalization Tank. The Water Extraction Pumps will be operated by an AUTO-OFF-MAN three-position selector switch, an "A-A/B-B" duty/backup three-position pump selector switch, and an [A/B] alternator/duty-backup circuit which

automatically sequences the pumps for even wear. In the AUTO mode the selected/sequenced water extraction pump is controlled by the vacuum pressure sensor on the water extraction tank to maintain between (say) 24 to 28 inches Hg vacuum in the tank (adjustable), interlocked with the water extraction tank low-low level switch, which prevents dry operation of the pump, and the high-high level switch in the groundwater treatment system No. 2 equalization tank which will shutdown the discharge pump when activated.

CONDITION	SETTING/FUNCTION
Vacuum Level Control:	Low (24"Hg) vacuum - ON High (28"Hg) vacuum - OFF
Water Extraction Tank:	Low-Low level - Water Extraction Pump shutdown
No. 2 Equalization Tank:	High-High level - Water Extraction Pump shutdown

The water extraction pumps can be operated in the MAN mode for troubleshooting and maintenance purposes. In the MAN mode, the selected/sequenced pump will run independently of all interlocks except the motor overload and the No. 2 equalization tank high-high level alarm.

The OFF position disengages all control signals to the water extraction pumps so that neither will not operate.

The vacuum in the water extraction tank is connected to the water extraction manifold, where it is delivered, on demand, to the extraction wells (separate sensors and circuits control the function of each well).

The extraction pump discharge to the No. 2 Equalization Tank will be fitted with a pressure and flow measurement and transmitting device, which will provide a 4 to 20 ma signal to the PLC, which will record the operational flows and pressures.

2. Water Extraction Tank

By maintaining a small volume air pocket in the tank top, the water extraction tank provides a hydraulic/pneumatic vacuum reservoir for the water extraction manifold. An air purge vacuum pump connected to the Water Extraction Tank top evacuates the tank at start-up, and maintains the air pocket volume during system operation, automatically purging excess air (due to air leaks) as controlled by low and high liquid level [conductivity] sensors in the tank. A vacuum pressure sensor in the water extraction tank will control the extraction pump operation to maintain vacuum within the tank and to discharge accumulated water from the water extraction tank to the No. 2 Equalization Tank of the groundwater

treatment system. A Low-Low liquid level sensor in the tank will shutdown the discharge pumps to prevent dry operation, as described in the Water Extraction Pump functional description above.

CONDITION	SETTING/FUNCTION
Water Extraction Tank:	Low level - Start Air Purge Vacuum Pump High level - Stop Air Purge Vacuum Pump
Water Extraction Tank:	Low-Low level - Water Extraction Pump shutdown

3. Water Extraction Manifold

The Water Extraction Tank is connected to the Water Extraction Manifold, where vacuum is delivered to each of the four extraction wells on demand (separate sensors and circuits control the function of each well).

Each well connection to the Water extraction manifold will include a check valve, flow control valve, sight glass and solenoid valve.

Each water extraction solenoid valve will be operated by an AUTO-CLOSE-OPEN three position selector switch. In the AUTO mode, the solenoid valve will be automatically controlled by the level sensor in the extraction well as described in the EXTRACTION WELL functional description. The CLOSE and OPEN modes will manually control the water extraction solenoid valve for maintenance and troubleshooting purposes.

E. Extraction Wells

1. General

Each of four extraction wells will be used to independently extract groundwater and soil vapor from the subsurface. Soil vapor will be extracted directly from a connection to the well riser, while groundwater will be extracted from each well through a coaxial straw, which extends into the well to some depth below the static groundwater level.

Each well will be connected to the water and vapor extraction manifolds and will be configured identically, however each well will be controlled separately. Within each extraction well a three point liquid level sensor [conductivity sensor] will be used to automatically control the water and vapor extraction manifold solenoid valves, which subsequently control the following:

- water level in the well

- water extraction rate
- vapor extraction rate

Each vapor and water extraction valve will have an AUTO-CLOSE-OPEN three position selector switch, but will normally operate automatically, as controlled by the level sensors in each respective well.

2. Water Extraction Control

The extraction well low level sensor will provide a signal for the water extraction solenoid valve to close, stopping the extraction of water from the well. The low level sensor signal will also open the vapor extraction solenoid valve, starting the extraction of vapor from the well. The high level sensor signal will open the water extraction solenoid valve, starting the extraction of water from the well.

3. Vapor Extraction Control

If the water extraction rate does not keep pace or exceed the rate of water flow into the well, the ascending water level may energize the high-high level sensor which will signal the vapor extraction solenoid valve for that well to close, stopping the extraction of vapor from the well, and relaxing the vacuum applied to that well. With the vacuum in the well relieved, the water extraction rate will increase and the water level will drop. When the low level sensor is deactivated, the water extraction solenoid valve will close and the vapor extraction valve will open, allowing the extraction of soil vapor to start again. Although this sequence of valve openings and closings will provide suitable control of the extraction processes, it is anticipated that by balancing the system flow rates, the water extraction valve (only) will open and close regularly, while the vapor extraction valve remains open.

CONDITION	SETTING/FUNCTION
Extraction Well Low Level	Low - Vapor Valve OPEN Low - Water Valve CLOSED
Extraction Well High Level	High - Water Valve OPEN
Extraction Well High-High Level	High-High - Vapor Valve CLOSED

PART 2 PRODUCTS

2.1 PRESSURE GAUGES

A. General

Vendor to provide field mounted indicating pressure gauges with 316 SS Bourdon Tube Element, stainless steel cam and roller, built-in overload and underload movement stops, and full back blowout protection, in quantities as noted in specification body, with the following features:

Vendor shall attach to each piece of equipment an embossed or engraved stainless steel tag bearing the project order number and engineering tag number as indicated.

B. Specification (Range 0-20" Hg Vacuum)

Eng. Tag: PG, 012A, 012B, 012C, 012D, 012E, 012F, 013, 023
Quantity: Eight (8)
<u>Gauge</u>
Service: Gas
Range: 0-20" Hg VAC
Accuracy: Min. 1.0% Full Scale
Dial Size: 4½"
Dial: WHT W/BLK
Movement: 270°
Pointer: Adjustable
Case: Solid Font
Mounting: Bottom Stem
Case Material: Polyester
Element: SS Tube
Lenses: Shatterproof Glass
Process Conn: 316 SS ½" MNPT
Preferred List
Manufacture:

C. Specification (Range 0-30" Hg Vacuum)

Eng. Tag: PG, 011A, 011B, 011C, 011D, 011E, 011F, 015, 031, 030, 026
Quantity: Ten (10)
<u>Gauge</u>
Service: Water
Range: 0-30" Hg VAC
Global Accuracy:
Dial Size: 4-1/2"
Dial: WHT W/BLK
Movement: 270°

Pointer: Adjustable
Case: Solid Font
Mounting: Bottom Stem
Case Material: Polyester
Element: SS Tube
Lenses: Shatterproof Glass
Process Conn: 316 SS 1/2" MNPT
Manufacture:
Preferred List:

D. Specification (Range 0-15" Hg Vacuum)

Eng. Tag: PG-010A, 010B, 010C, 010D, 010E, 010F
Quantity: Six (6)
<u>Gauge</u>
Service: Gas
Range: 0-15" Hg VAC
Global Accuracy:
Dial Size: 4-1/2"
Dial: WHT W/BLK
Movement: 270°
Pointer: Adjustable
Case: Solid Font
Mounting: Bottom Stem
Case Material: Polyester
Element: SS Tube
Lenses: Shatterproof Glass
Process Conn: 316 SS 1/2" MNPT
Manufacture:
Preferred List:

E. Specification (Range 0-30 psig)

Eng. Tag: PG-034, PG-036, and PG-037
Quantity: Three (3)
<u>Gauge</u>
Service: Water
Range: 0-30 psig
Global Accuracy:
Dial Size: 4-1/2"
Dial: WHT W/BLK
Movement: 270°
Pointer: Adjustable
Case: Solid Font
Mounting: Bottom Stem
Case Material: Polyester
Element: SS Tube

Lenses: Shatterproof Glass
Process Conn: 316 SS 1/2" MNPT
Manufacture:
Preferred List:

F. Specification (Range Low Pressure)

Eng. Tag: PG; 038A, 038B and PIT-020
Quantity: Three (3)
<u>Gauge</u>
Service: Gas
Range: 0-4PSIG (PG-038B and PIT-020), 0-30" H_2O (PG-038A)
Global Accuracy:
Dial Size: 4-1/2"
Dial: WHT W/BLK
Movement: 270°
Pointer: Adjustable
Case: Solid Font
Mounting: Bottom Stem
Case Material: Polyester
Element: SS Tube
Lenses: Shatterproof Glass
Process Conn: 316 SS
Manufacture:
Preferred List:

2.2 GAUGE PROTECTORS (One per PG)

A. Diaphragm Seals

Quantity: Twenty-six (26)
Case Conn: 1/2" FNPT
Process Conn: 1/2" FNPT
Mat'l Upper Bowl: 316 SS
Flange Mat'l: N/A
Mat'l Diap: 316 SS
Flange Mat'l: N/A
Mat'l Diap: 316 SS
Fill Fluid: Silicone
Mat'l Boils/Nats: 3/6 SS

2.3 PRESSURE GAUGE ISOLATION

A. Gage Cock Valve: Tee or lever handle, brass for maximum 150 psig (1034 kPa), Teflon Packing/Seals.

2.4 MAGNETIC FLOW TUBE AND TRANSMITTER

A. General

Vendor to provide magnetic flow system in quantities as noted in specification body with the following features:

1. Flowtube:

   Flowtube shall provide unobstructed flow of process while generating low level, high impedance DC signals proportional to the rate of flow, using the principle of electromagnetic induction. Tube electrodes shall be shaped and tube liner installed so as no process accumulation builds in tube.

A means of grounding will be provided in materials compatible to flowtube material. Flowtube electrical housing shall be NEMA 7.

2. Transmitter:

   Transmitter shall provide power to the flowtube magnetic coils, while converting the flowtube signal into a 4-20 ma DC output linear to flow rate. Transmitter will also provide a flow gauge for local indication, and a pulse generated signal for totalization. Transmitter electrical housing shall be NEMA 4.

3. Both flowtube and transmitter shall have an embossed or engraved stainless steel tag attached bearing the project order number and engineering tag number as indicated.

See Section B of this specification for complete process and technical requirements.

B. Specifications

1. Flow Element: (Inline)

   Eng. Tag: FIT 032
   Quantity: One (1)
   Service: Water/Slurry
   Proc. Conductivity: 5 Micro Siemens PCR/CM
   Temp: AMB. (0-90°F)
   Press: 15 PSIG
   Flow Min: 15 GPM
   Flow Max: 55 GPM
   Viscosity: 1
   Spec. Gr. 1
   Line Size: 2"

Metering Tube Material: Cast Aluminum with Aluminum Oxide 99.5% or PTFE
Connection: 150* R.F. Flange
Electrode: Elliptical
Elec. Material: 316 SS
Enclosure: NEMA 7
Manufacturer: Preferred List

2. Flow Transmitter (Integral)

Eng. Tag: FIT 032
Scale: 0-55 GPM
Quantity: One (1)
Power Input: 120 VAC, 60 HZ, 1ϕ
Power Consumption: 50 Watts Max (combined flowtube/transmitter use)
System Accuracy: 0.5% of flow rate
.04 ft/S from low flow cutoff to 1.0 ft/S
Accuracy unaffected by change in process fluid properties
Damping: Adjustable
Repeatability: 0.1% of reading
Output: *4-20 ma DC isolated, into 0-1000 OHMS, Linear
*0-1000 HZ Pulsed
RFI Protected
Local Readout: Linear Flow Rate

2.5 LEVEL SENSORS AND SWITCHES

A. General

Provide a liquid level detection and control device, based on the conductivity of water (conductivity $>100\,\mu s$) to control the "pump down" and "high level conditions in wells or sealed tanks. This device can connected for two-point control (high /low) or wired for single point-level control (high or low level alarm), and shall use an electrical ground to the water (through the tank or into the well) as the conductive reference. Where used in tanks, the sensor probes shall be installed into the tanks through electrically insulated fittings welded to the tank wall, and a ground stud will be welded to the tank. Where used in wells, tether-mounted electrodes will be mounted to piping internal to the well, or suspended to a predetermined depth where necessary, with the ground contact with the water made through a conductive pipe or dedicated ground electrode. Service loops (spare cable) shall be provided to allow field adjustment of the water level settings in wells. Sensor wiring into vacuum extraction wells will be potted to prevent the escape of vacuum. Sensor probes and wiring shall be intrinsically safe for use in Class 1 Division 1 atmospheres.

B. Specification (Elements)

1. Tag No.: LE-009A, LE-009B, LE-009C, LE-009D, LE-009E, LE-009F, LE-010A1, LE-010A2, LE-010B1, LE-010B2, LE-010C1, LE-010C2, LE-010D1, LE-010D2, LE-010E1, LE-010E2, LE-010F1 and LE-010F2

Provide a quantity of (18) eighteen electrode fittings, (3) three in each well, for level control in wells VE-1R, VE-2R, VE-3R, VE-9, VE-10 AND VE-11 as follows:

- Electrode suspension wire #16 AWG stranded copper, teflon insulation
- Electrode construction brass or stainless steel, with insulative cups constructed of material compatible with toluene (i.e., nylon, teflon, HDPE) to prevent short circuiting.
- Set the depth of electrodes LE-009(A thru F) at elevations within the extraction wells as indicated on the contract drawings
- Set the depth of electrodes LE-010(A thru F)-1 at elevations within the extraction wells as indicated on the contract drawings.
- Set the depth of electrodes LE-010(A thru F)-2 within the extraction wells above the setting of LE-010(A thru F)-1 as indicated on the contract drawings.
- Electrode wiring service loop in well to accommodate field adjustments
- Wiring potted air-tight where it exits the well to stop vacuum leakage
- Nema-4 junction box mounted to a pipe threaded fitting on the outside of the well to accommodate field wiring/conduit connections.

2. Tag No.: LE-036A and LE-036B

Provide a quantity of (2) two electrode fittings for level control in well VE-7 as follows:

- Electrode suspension wire #16 AWG stranded copper, teflon insulation

- Electrode construction brass or stainless steel, with insulative cups constructed of material compatible with toluene (i.e., nylon, teflon, HDPE) to prevent short circuiting.

- Electrode wiring service loop in well to accommodate field adjustments

- Nema-4 junction box mounted on the outside of the well to accommodate field wiring/conduit connections.

3. Tag No.: LE-025A and LE-025B

Provide a quantity of (2) two point-level sensor probe fittings for level control in tank T-010 as follows:

- Probe assemblies shall be electrically insulated from the tank fitting and walls by an insulator compatible with toluene (i.e., nylon, teflon or HDPE).

- 1-inch NPTM connection through the tank

- Electrode construction brass or stainless steel

- Threaded electrical wiring connection (stud with nut, or screw terminal)

- Probe shall extend 3-inches into the tank

- The probe shall be fitted with a Nema-4 condulet junction box to protect the electrical connection within it

- A ground stud (1/4-20 UNC 2B thread) shall be mounted on the tank adjacent to the sensor probes to provide a conductive ground connection to the tank. It shall be configured such that a condulet box can be to protect the electrical connection (i.e., shoulder stud welded inside a short pipe nipple that is mounted to the tank, with a condulet box mounted to the nipple)

- Each sensor probe shall be used to provide point-level control signals for the conductive fluids within the tank

4. Tag No.: LE-027A1 and LE-027A2

Provide a quantity of (2) two point-level sensor probe fittings for level control in tank T-020 as follows:

- Probe assemblies shall be electrically insulated from the tank fitting and walls by an insulator compatible with toluene (i.e., nylon, teflon or HDPE)

- 1-inch NPTM connection through the tank

- Electrode construction brass or stainless steel

- Threaded electrical wiring connection (stud with nut, or screw terminal)

- Probes shall extend vertically downward into the tank from a fittings on the tank top

- Probe LE-027A1 shall extend into tank T-020 as required to sense liquid level at 95 percent of tank capacity

- Probe LE-027A2 shall extend into tank T-020 as required to sense liquid level at 90 percent of tank capacity

- The probe shall be fitted with a Nema-4 condulet junction box to protect the electrical connection within it

- A ground stud (1/4-20 UNC 2B thread) shall be mounted on the tank adjacent to the sensor probes to provide a conductive ground connection to the tank. It shall be configured such that a condulet box can be to protect the electrical connection (i.e., shoulder stud welded inside a short pipe nipple that is mounted to the tank, with a condulet box mounted to the nipple)

- Each sensor probe shall be used to provide point-level control signals for the conductive fluids within the tank

C. Specification (Level Control Sensor/Switch)

1. Tag No.: LS-009(A thru F), LS010(A thru F), LS-025A, LS-027A, LS-036

Provide (15) conductivity sensors to control liquid levels in extraction and pumping wells and Tanks T-010 and T-020. Electromatic Model EV-220 VAC mounted on 11-Pin DIN rail sockets in a Nema 4 enclosure.

2.6 ELECTRONIC PRESSURE TRANSMITTER

A. General

Vendor to provide a 2-wire electronic pressure transmitter in quantities as noted in specification body with the following features.

- 2-wire transmitter system
- Transmitter to operate on 24V dc power
- 4-20 mA linear output
- Output zero adjustment
- Output span adjustment
- Dampening adjust
- Max. zero elevation 600%
- Max. zero suppression 500% of cal. span
- High accuracy and repeatability .25% of calib. span
- NEMA 4 enclosure
- Integral terminals for screw connections of field wiring
- Electrical connection 1/2" conduit
- Wetted parts including capsule to be 316 sst
- Capsules fill fluid to be silicone
- Class 1, Division 1, nonincendive electronics
- Calibration by factory per specified ranges
- Bolts for flanges to be 316 S.S.
- Mounting bracket to be B3 type for 2" pipe stand flat mounting bracket
- RFI Protection

THE VENDOR SHALL ATTACH TO EACH PIECE OF EQUIPMENT AN EMBOSSED OR ENGRAVED STAINLESS STEEL TAG BEARING THE PROJECT ORDER NUMBER AND ENGINEERING TAG NUMBER AS INDICATED.

B. Specification

Eng. Tag#:	PIT-020	PIT-023	PIT-026	PIT-034
Quantity:	One (1)	One (1)	One (1)	One (1)
Type:	Gauge Press.	Absolute	Absolute	Gauge Press
Elec. Class:	Class 1 Div. 1	Class 1 Div. 1	Class 1 Div. 1	Class 1 Div 1
Service:	Gas	Water Vapor	Gas	Water
Oper. Press:	0-5 psig	0-15°Hg	0-30" Hg	0-30 PSIG
Oper. Temp:	35-150°F	35-150°F	35-150°F	35-150°F
Ambient Temp:	90°F	90°F	90°F	90°F

Process Conn:	½" NPT	½" NPT	½" NPT	½" NPT
Body Mat:	316 SS	316 SS	316 SS	316 SS
Gasket:	316 SS	316 SS	316 SS	316 SS
Diaphragm:	316 SS	316 SS	316 SS	316 SS
Flanges:	316 SS	316 SS	316 SS	316 SS
Bolts/Nuts:	316 SS	316 SS	316 SS	316 SS
Adapters:				
Wetted Parts:	316 SS	316 SS	316 SS	316 SS
Trans Type:	2 wire	2 wire	2 wire	2 wire
Output:	4-20 mA DC Linear	4-20 mA DC Linear	4-20 mA DC Linear	4-20 mA DC Linear
Calib. Range:	0-3 PSIG	30" to 0" Hg	30" to 20" Hg	0-30 PSIG
Volt. Surge Protection:	Yes	Yes	Yes	Yes
RFI Protected:	Yes	Yes	Yes	Yes
Fill Fluid:	Silicon	Silicon	Silicon	Silicon
Manufacturer:				
Model#:				
Calibration:	0 PSIG = 4 mA DC 5 PSIG = 20 mA DC	10" Hg = 4 mA DC 35" Hg = 20 mA DC	0" Hg = 4 mA DC 30" Hg = 20 mA DC	0 PSIG = 4 mA DC 30 PSIG = 20 mA DC
Options:				
Side Drain:	316 SS	316 SS	316 SS	316 SS
Vent Bottom:	316 SS	316 SS	316 SS	316 SS
Local Indicator:	(0-3 PSIG)	(30" Hg to 0" Hg)	(30" Hg to 20" Hg)	(0-30 PSIG)

2.7 PROGRAMMABLE LOGIC CONTROLLER

A. General

Vendor to provide one (1) Modicon PLC Model A984-145 compact system.

The PLCs shall be capable of performing both analog and discrete control functions required to operate the facility with the ability of allowing an

operator to monitor, change, and be notified of process conditions in their normal or abnormal state.

The PLC shall be micro processor based and be programmed in written ladder logic, operated by software allowing online and offline operation and network communication.

B. Specification:

Modicon Compact System

Eng Tag # PLC-1
Quantity: One (1) located in SVES Trailer

Type: Modicon Model A984-145 compact system with Mod Bus Plus

Required Design and Construction Features:

1. System to consist of integral processor with 8K logic memory and 1920 registers, having a scan time of 5 ms/k with one (1) mod bus port and one (1) mod bus plus port, with a total of 256 I/O points of any mix and a maximum of 4 local racks.

2. The system shall use Modicon Series A120 I/O Cards of the following type, and the following components:

   - BADU-206-Analog input, 4 point, 4-20 MA - Quantity: (4)
   - BDAP-208 - Discrete isolated relay output, 8 point, 115 Vac - Quantity: (1)
   - HDTA-200 - Main Housing - Quantity: (1)
   - HDTA-201 - I/O Housing - Quantity: (2)
   - P120-000 - Power Supply - Quantity: (2)
   - A984-145 - Controller - Quantity: (2)
   - AS-BDAP-209 - Discrete output, 8 point 115 VAC
   - AS-BDAP-209 - Discrete input, 8 point 115 VAC

3. The PLC permits bidirectional communication with a host computer utilizing the mod bus and mod bus plus ports.

4. Required Operational and Functional Capabilities:

   - Processing capability for a minimum of one PID control loop with analog input signal conditioning, and remote setpoint and ratio control functions.
   - Anti-reset windup.
   - Ramp setpoint capability.
   - Output limiting.

- Alarming (absolute process and deviation).
- Calculation Functions:
  1. Addition
  2. Subtraction
  3. Multiplication
  4. Division
  5. Square Root
- Override control via remote inputs and/or internal program logic.
- Totalization capability.
- Digital logic operations.
- On-Off digital output control.
- Configurable power fail-auto restart in previous mode at last output or in manual at a preset output.
- Balances and pumpless control transfer between all operating modes.
- Internal operating diagnostics to detect hardware malfunctions, memory error, loss of input and low memory battery backup voltage.

2.8 PLC CONTROL CABINET

A. Scope

1. The Control Cabinet enclosure provided by vendor shall be a standard NEMA 12 enclosure as manufactured by Hoffman Engineering, or equal. It will be supplied with subpanel(s).

2. Furnish all equipment as noted in the "Equipment Identification List" located on the Control Cabinet Layout and Detail drawing.

3. VENDOR shall also furnish removable gasket cable access plate(s), terminal block stand-offs, panel cutouts for face mounted instruments, finish paint, and all other items necessary to complete the fabrication in accordance with this specification.

4. The VENDOR shall complete the final assembly of the Control Cabinet, including mounting of all devices, wiring, testing, and paint touch-up in accordance with this specification and all applicable drawings.

B. Definitions

1. The term "VENDOR" shall refer to the Panel Shop where final assembly and wiring of the Control Cabinet is performed.

2. The phrase "or approved equal" means alternate equipment or installation method has been approved for use by the Engineer. Approval is obtained only after VENDOR submits specifications or details of alternative design to CIBA, in wiring, and has been approved, in writing, by the Engineer.

C. Panel Construction

1. The Control Cabinet shall be a NEMA 12 single door, free standing enclosure.

2. The VENDOR shall modify the enclosure as necessary, to provide additional features, if any, as shown on the applicable drawings.

3. All equipment located inside the panel shall be mounted by the VENDOR using subpanels, welded studs, or framework. No screws or hardware shall protrude through any Control Cabinet exterior surface.

4. Subpanels as shown on Control Cabinet Layout and Detail drawings are to be considered as a minimum. VENDOR may add subpanel(s) if required to complete the fabrication only after obtaining CIBA written approval. Subpanels shall be minimum 12 gauge steel, mounted on standoffs and removable. All subpanels with a side longer than 8" shall have a one-inch return bend for rigidity.

5. All bolts and hardware used in Control Cabinet construction shall be rust-resistant cadmium plated:

D. Finish

1. Exterior finish all be Sherwin-Williams Polane polyurethane paint, color shall be ANSI No. 62 light gray.

2. Interior finish shall be cabinet manufacturer's standard white enamel.

3. Subpanel(s) furnished by the VENDOR, if any, shall be painted with white enamel to match standard cabinet color.

4. Paint shall be spray applied and shall be free of runs, drips, and sags.

5. The paint manufacturer's instructions shall be strictly adhered to by the VENDOR.

E. Wiring

1. The VENDOR shall furnish all wire, wire markers, wire lugs, mounting hardware, and mount all equipment in place, making all connections tight so they will not loosen from vibration.

2. Wire type and size shall be as follows:

2a. All "Control Circuit" and "Utility Circuit" wires shall be #14 AWG. Both power and control wiring shall be stranded copper with 600

volt rated type S.I.S. moisture and heat resistant insulation. Based upon availability, VENDOR may select any one of the acceptable types of wire for fabrication of this Control Cabinet. However, all control and utility wiring shall be of the same type. No PVC wire or wire duct shall be used in the panel. Control Circuit wiring shall be color coded as follows:

BLACK All line conductors (1L1, 2L1, etc.) and the positive side of D.C. circuits.

WHITE All neutral conductors (1L1, 2L1, etc.) and the negative side of D.C. circuits.

GREEN All conductors providing ground within the Control Cabinet.

2b. All "Instrument Circuits" shall use two twisted shielded #18 AWG conductors in an overall jacket. Twisted conductors shall be stranded tinned copper wrapped in aluminum shield tape with tinned drain wire for electrostatic noise rejection. Conductors shall be insulated with 300 volt rated Rockbestos wire. Insulation shall be color coded as follows:

BLACK Positive (POS) conductor

WHITE Negative (POS) conductor

3. All wire conductors shall be identified at both ends with wire markers using the wire numbers shown on Control Diagrams. The VENDOR should bring to ENGINEER's attention for resolution any missing or duplicated wire numbers.

4. Wire markers shall be fire retardant, tubular type, fitted snugly over wire insulation or heat shrink tubular type marker shrunk snugly over wire insulation. Numerals are to be permanently embossed and visible when installed.

5. All internal wiring shall be installed with a "drop loop" of sufficient slack so that wiring is not strained and so equipment is accessible and/or removable for maintenance.

6. All wiring shall be continuous from termination-to-termination point without splices.

7. Connections to devices with pigtails shall be made on a tiepoint block mounted to the interior of the Control Cabinet.

8. Connections to screw type terminal blocks shall be made by means of pre-insulated ring tongue lugs, pressure-crimped to the conductor and insulation of wire. Lugs must be installed using the appropriate ratchet-type crimper.

9. Wire lugs shall be 3M Highland Ring Tonge Connectors with insulating sleeves.

10. Connections to devices with saddle or box type terminal blocks shall be made by inserting the stripped conductor fully into the connector.

11. Connections to devices with push-on type terminals shall be made by means of the appropriate type of pre-insulated push-on lugs pressure-crimped to the conductor and insulation of wire. Lugs must be installed using the appropriate ratchet-type crimper.

12. Wires which are cut or nicked are not acceptable. Wires shall be free from tool marks and abrasions. Minimum bend radius to 1/4" for single conductor wire.

13. All cabinet wiring shall be run in covered wiring duct supplied and installed by the VENDOR. All wiring duct shall be made of non PVC material and be of the restricted slot design as manufactured by Panduit Corporation, or equal.

14. VENDOR shall verify that wiring within duct does not exceed 50% fill. The duck sizes shown on Control Cabinet Layout and Detail drawings shall be considered as a minimum by the VENDOR and shall in no way imply deviation from nor relieve VENDOR of this requirement.

15. Upon exiting the wire duct, the final 24 inches of cabinet wiring may be run exposed to route to equipment. Exposed wiring shall be neatly bundled and adequately supported using clamps and/or cleats which are plastic or plastic lined. Wiring shall be supported with cable clamps ONLY where wire ducts cannot be installed or as allowed for final runs.

16. Instrument Circuit wiring and low level DC wiring shall be run in bundles and/or ducts completely separate from 120 VAC Control Circuit and Utility Circuit wiring. Where it is necessary for these leads to cross over 120 VAC wiring, they shall cross as near to right angles as possible.

17. All internal wiring and terminal block jumpers shall be installed on the "Panel Wiring" side of terminal blocks. Jumper bars shall not be used on any terminal block.

18. Grommeted holes shall be provided for wiring passing through steel mounting plates.

19. Terminal blocks shall be provided by the VENDOR and shall be heavy duty, 600 volt rated Weidmuller. Number of terminal points and location shall be as shown on CIBA Control Cabinet Layout and Detail drawings.

20. All terminal blocks shall be permanently and neatly machine marked, consecutively, as shown on the terminal strip layout drawings. Hand marked terminal blocks are not acceptable.

21. Circuits connected to outgoing terminal strips, including the shielded wire for instrumentation cable, shall be terminated at terminal blocks.

22. No more than two (2) wires shall be terminated on a single terminal. Approximately twenty percent terminal points shall be provided.

23. Terminal block "standoffs" shall be supplied by the VENDOR to allow ample clearance for bundling of field cables.

24. Cable strap brackets shall be provided by VENDOR and shall be installed between adjacent rows of terminal blocks on the "Field Wiring:" side of the block at approximately 18-inch intervals for tie-wrap support of field cables.

25. The VENDOR shall supply a 1" x 1/4" copper Equipment Ground Bus the entire length of the panel which shall include a ground terminal at each end suitable for a #1 to #2/0 AWG conductor (Thomas & Betts No. 32209 connector or approved equal). Equipment Ground Bus shall be fabricated in accordance with details provided on the Control Cabinet Layout and Detail drawings.

26. The Equipment Ground Bus bar shall be securely attached to the Control Cabinet steel by bolting, brazing, or welding. When Equipment Ground Bus is bolted, all paint shall be removed from the contact area and a "no-oxide" grease applied before bolting.

27. The VENDOR shall supply a 1" x 1/4" copper Instrument Ground Bus which shall include a ground terminal suitable for a #1 to #2/0 AWG conductor (Thomas & Betts No. 32209 connector or approved equal). Instrument Ground Bus shall be insulated from the Control Cabinet steel and fabricated in accordance with details provided on the Control Cabinet Layout and Detail drawings.

28. All ground connections, whether or not shown on the drawings shall be run independently to the appropriate ground bus.

29. The VENDOR shall mount, wire, and provide a neatly typed directory for the distribution panel in accordance with the drawings.

30. Power supplied, voltage regulators and transformers, if required, will be supplied by VENDOR.

31. The VENDOR shall provide utility convenience outlet(s), PLC/Computer terminal outlet(s), interior lighting fixture(s) as shown on CIBA Control Cabinet Layout and Detail drawings.

32. Wire runs between interior lights, light switches, convenience outlets, distribution panel and heating circuits, where applicable, shall be enclosed in thin wall conduit from their source. Flexible conduit shall NOT be used.

33. VENDOR shall mount all PLC equipment, key all I/O slots, set all dip switches and install all modules in accordance with manufacturer's published recommendations.

F. Testing

1. All testing required by this section of the specification shall be performed and Certified, in writing, by the VENDOR PRIOR to the performance of function testing by the OWNER.

2. VENDOR shall submit such certification to OWNER as soon as all VENDOR tests are successfully completed. Such notification signifies that the Control Cabinet is totally finished and ready to turn over to CIBA Engineer for functional testing. Any re-testing performed by CIBA Engineer due to incompleteness of the Control Cabinet shall be at the expense

3. Electrical tests shall demonstrate freedom from unintentional ground and accuracy of the wiring for all Control Cabinet mounted devices.

4. All tests shall be performed in accordance with the applicable ANSI Standards.

5. The following test(s) are required to be performed by the VENDOR.

   5a. All wiring shall be given a continuity check to verify agreement with the wiring diagram.

   Instrument (4-20mADC) Circuits are NOT subjected to continuity testing. Rather, these circuits are verified by the ENGINEER during functional testing.

6. The VENDOR shall be responsible for proper protection of instruments and devices that may be damaged by testing.

7. The OWNER shall perform a functional test of the Control Cabinet in the VENDOR's shop prior to shipment to verify PLC program and Instrument Circuits.

2.9 ELECTRONIC TEMPERATURE TRANSMITTERS

A. General

Vendor to provide a 2-wire electronic temperature transmitter in quantities as noted in specification body with the following features:

- 2-wire transmitter system
- Transmitter to operate on 24V dc power
- 4-20 mA linear output
- Output zero adjustment
- Output span adjustment
- Upscale burnout indication
- Elevation/suppression: .15% of base temperature
- High accuracy and repeatability .2% of calibration span
- Patinum RTD 100 OHM linearized output
- Integral terminals for screw connections of field wiring
- Electrical connection ½" conduit
- Class 1, Division 1, nonincendive electronics
- Calibration by factory per specified ranges
- NEMA 4 enclosure
- Mounting bracket to be B3 type for 2" pipe stand flat mounting bracket
- RFI Protection

The vendor shall attach to each piece of equipment an embossed or engraved stainless steel tag bearing the project order number and engineering tag number as indicated.

B. Specification

Eng. Tag No.: TIT-022
Quantity: One (1)
Type Element: RTD 3/16" DIA. 3 wire
Elec. Class: Class 1 Div. 1
Service: Water Vapor
Operating Temp: 150°F
Ambient Temp: 90°F
Process Conn: 3/4" NPT
Temp. Trans.: 2 wire
Output: 4-20 mA DC Linear
Calis. Range: 100-200°F
Volt. Surge Protection: Yes
RFI Protected: Yes

Manufacture: Preferred List
Calibration: 100°F = 4 mA DC
200°F = 20 mA DC

Option: Local Indicator
Thermowell - 316 SS, 3/4" NPT Process Connector, .250 Bore.
See attached sketch for Thermowell Assembly.

2.10 TEMPERATURE INDICATOR

A. General

Vendor to provide on (1) United Electric temperature indicator Type T800 in quantities as noted in specification body, with the following features:

Vendor shall attach to each piece of equipment, an embossed or engraved stainless steel tag bearing the project order number and engineering tag number as indicated.

B. Specification

Tag: TG024 and TG022
Quantity: Two (2)
Service: Gas
Temperature Norm:
Temperature Max: 150°F
Scale: 0-250°F
Bulb Size: 3/8" x 4-1/2" (6 foot long capillary)
Enclosure: NEMA 7
Options: 316 SS thermowell with 3/4" NPT process connection sized to accept 3/8" x 4-1/2" bulb. U Length = 2-1/2"

2.11 FLOAT LEVEL SWITCH

A. General

Vendor to provide one (1) W.E. Anderson Model L4 Flotect Float Switch with the following features:

B. Specification

Tag No.: LE/LS 027B
Quantity: One (1)
Service: Water
Spec. Gravity: Min 0.7
Float: 316 stainless steel
1⅝" Dia on 6" ARM

Process Connection: 1½" NPT
Mounting: Horizontal
Switch Body: 316 SS NEMA 4
Switch Action: Open on low low level
Switch Rating: SPDT UNAP Action 120 VAC, 10 AMP
Elec. Class: Class 1 Div 1
Manufacture: Duyer Instruments, Inc., W.E. Anderson Division
Model No.: L4-SS

2.12 ELECTRONIC CAPACITANCE LEVEL SWITCH

A. General

Vendor to provide point level sensing system with non-coating sensing element for use in aqueous slurries and treated water applications. System will energize and de-energize independent control relays when appropriate level is reached. Vendor to provide quantities as noted in specification body.

B. Specification

Tag No.: LE/LS 0250
Quantity: One (1)
<u>Element</u>
Service: Liquid (water)
Diameter: ½"
Length: 14 inches tip sensitive
De-electric Constant:
Material: 316 SS
Wetted Parts: 316 SS
Insulation: Non Coating Teflon
Agitation: N/A
Pressure: N/A
Temperature: 150°F
Process Connection: 3/4" NPT
Mounting: Horizontal
<u>Control Relay</u>
Type: Solid state with adjustable low fixed sensitive resistant
Zero Range: 0 pF to 100 pF
Response Time: 100 milliseconds
Power Supply: 120 Vac, 60 HZ
Contacts: 120 VAC, 5A non-inductive
Contract Arrange: Min, SPST
Temp. Range: -40°F to 140°F
Enclosure: NEMA 4
Manufacturer: Preferred List

2.13 ELECTRONIC PRESSURE TRANSMITTER

A. General

Vendor to provide a 2-wire differential electronic pressure transmitter in quantities as noted in specification body with the following features:

- 2-wire transmitter system
- Transmitter to operate on 24V dc power
- 4-20 mA linear output
- Output zero adjustment
- Output span adjustment
- Dampening adjust
- Max. zero elevation 600% of cal. span
- Max. zero suppression 500% of cal. span
- High accuracy and repeatability .25% of calib. span
- NEMA 4 enclosure
- Intergral terminals for screw connections of field wiring
- Electrical connection ½" conduit
- Wetted parts including capsule to be 316 sst
- Capsules fill fluid to be silicone
- Class 1, Division 1, nonincendive electronics
- Calibration by factory per specified ranges
- Bolts for flanges to be 316 sst
- Mounting bracket to be B3 type for 2" pipe stand flat mounting bracket
- RFI Protection

The vendor shall attach to each piece of equipment an embossed or engraved stainless steel tag bearing the project order number and engineering tag number as indicated.

B. Specification

Eng Tag No.: FIT-021
Quantity: One (1)
Type: ΔP
Elec. Class: Class 1, Division 1
Service: Gas (vapor)
Oper. Press: Max. 2 psig
Max ΔP: 1.6" H_2O
Oper. Temp.: 150°F
Ambient Temp.: 90°F
Process Connection: ½" NPT
Body Mat: 316 SS
Gasket: 316 SS
Diphram: 316 SS
Flanges: 316 SS
Bolts/Nuts: 316 SS
Wetted Parts: 316 SS

Type Trans.: 2 wire
Output: 2-20 mA dc Linear
Calib. Range: 0-3" WC
Volt. Surge Protection: Yes
RFI Protected: Yes
Fill Fluid: Silicon
Manufacturer: Preferred List

Calibration: 0" WC = 4 mA dc
3" WC = 20 mA dc
Options: Side Drain 316 SS, Vent Bottom 316 SS,
Local Indicator 0-3" WC, 5 Valve Manifold 316 SS

2.14 TUBE FLOW ELEMENT

A. General

Vendor to provide a differential pressure type tube flow element in 316 SS with process block valve and instrument shut-off valves in 316 SS, in quantities as noted in specification body with the following features:

Vendor shall attach an embossed or engraved stainless steel tag bearing the project order number and engineering tag number as indicated.

B. Specification

Tag No.: FE 021
Quantity: One (1)
Pipe Size/Sched: 6" Sch. 40
Pipe ID: 6.065"
Pipe Material: 316 SS
Pipe Design Press:
Process Pressure: 2 psig
Process Temp: 150°F
Fluid: Gas (vapor)
Flow Rate: 0-70,000 SCFH
Spec. Gravity: 1
Flow Coefficient: .6830
ΔP: 1.6" WC (vendor to verify)
Element Material: 316 SS
Process Connection: 1 5/16" MNPT coupling
Manufacturer: Preferred List

2.15 TEST PLUGS

A. Test Plug: 1/4 inch (6 mm) or 1/2 inch (13 mm) brass fitting and cap for receiving 1/8 inch (3 mm) outside diameter pressure or temperature probe with Viton core. Provide test plugs for calibration as indicated on Sheet I-10.

PART 3 EXECUTION

3.1 INSTALLATION

A. Install in accordance with manufacturer's instructions.

B. Coil and conceal excess capillary on remote element instruments.

C. Provide instruments with scale ranges selected according to service with largest appropriate scale.

D. Install gages and thermometers in locations where they are easily read from normal operating level.

END OF SECTION 15980

SECTION 15990
TESTING, ADJUSTING AND BALANCING OF HVAC SYSTEM

PART 1 GENERAL

1.1 SECTION INCLUDES

A. Perform the testing, balancing and adjusting of the HVAC system.

1.2 RELATED SECTION

1. Division 1, General Requirements.
2. Section 15550, Unit Heaters - Gas Fired.
3. Section 15750, Packaged Air Conditioning Units - Thru Wall, Room Type.
4. Section 15970, Automatic Temperature Controls.
5. Section 15120 Gas Piping System.
6. Division 16, Electrical.

1.3 QUALITY ASSURANCE

A. Balancers Qualifications:

1. Submit biographical data on employee proposed to directly supervise the testing, balancing and adjusting work.
2. Include proof of registration in the State of Rhode Island and a record of at least 5 years experience in the mechanical contracting industry, engaged in heating, ventilating and air conditioning work.

1.4 SUBMITTALS

A. Data Sheets:

1. Submit samples of data sheets on each item of equipment for approval.
2. Submit data sheets on each item of testing equipment required.

3. Include name of device, manufacturer's name, model number, latest date of calibration, and correction factors.

B. Report Forms:

1. Submit specimen copies of report forms.

2. Forms shall be 8-1/2 by 11-inch paper for looseleaf binding, with blanks for listing of the required test ratings and for certification of report.

3. Reports shall be on the organizations approved forms imprinted with the company's name.

4. Certified report outlining procedure used to balance the system and the types of measuring devices used.

C. Fill in test results on approved forms.

D. Submit three certified copies of required test reports to the CONTRACTOR for approval.

1.5 JOB CONDITIONS

A. Heating, ventilating, air conditioning equipment shall be completely installed and in continuous operation as required to accomplish the test, adjust and balance work specified.

1.6 OPERATING INSTRUCTIONS

A. Reports shall be certified by the testing engineer that the methods used and the results achieved are a specified.

1.7 CORRECTIVE ADJUSTMENTS

A. Should corrective measures caused by faulty installation require retesting, adjusting and balancing, such work shall be at no additional expense to the OWNER.

B. Inspections:

1. Fan Belt Deflection: No less than 1/4-inch or more than 1/2-inch.

2. Finned Coils: Plate type fins shall combed out with a fin comb for appropriate fin spacing. Helical fins shall be straightened with blunt bladed instrument.

3. Touch-Up Painting: Examine all equipment and touch-up all scratches, chips or otherwise marred factory finished.

PART 2 INSTRUMENTS

2.1 AIR BALANCE INSTRUMENTS

A. Provide all velometers, anemometers, pilot tubes, differential air pressure gages, manometers, hook gages, static pressure probe units, etc. as may be required to perform all air balance tests of HVAC equipment, ducts, registers, grilles, etc.

2.2 SYSTEM PERFORMANCE MEASURING INSTRUMENTS

A. Provide insertion thermometers, sling psychrometers, tachometers, revolution counters, clamp-on volt-ammeter recorders, and other instruments as required to measure all facets of the complete HVAC system performance.

PART 3 EXECUTION

3.1 INSPECTION

A. Pre-Startup Inspection:

1. Verify proper equipment mounting and setting.

2. Verify that control, interlock and power wiring is complete.

3. Verify alignment of motors and drives.

4. Verify proper piping connections and accessories.

5. Verify that lubrication is completed.

B. First Run Observations:

1. Verify direction of rotation.

2. Verify setting of safety controls.

3. Monitor heat build up in bearings.

4. Check motor loads against nameplate data.

C. Equipment Check:

1. Verify proper overload heater sizes.

2. Verify function of safety and operating controls.

3. Verify proper operation of equipment.

4. Report on inspection, observation and checking procedures.

3.2 AIR SYSTEMS

A. Test, adjust and balance systems in accord with the AABC "National Standards for Field Measurements, Total System Balance, Air Distribution, Hydronics Systems, Volume One Number 81266", or SMACNA's "Air Handling Specification."

B. Preliminary:

1. Identify and list size, type and manufacturer of all equipment to be tested, including air terminals.

C. Ventilation Systems:

1. Test and adjust rpm for all equipment, including each fan, to design requirements within the limits of mechanical equipment provided.

2. Test and record motor voltages and running amperes including motor nameplate data, and starter heater ratings for each unit as listed above.

3. make pitot tube traverse of main supply, and exhaust ducts, determine cfm at all fans. Adjust fan capacities within plus 3 to plus 10 percent of design requirements.

4. Test and record system static pressure, suction and discharge.

5. Test and adjust system for design outside air, cfm.

6. Record all fan speeds.

7. Record air quantity delivered by each fan.

8. Test and record heating apparatus entering air temperatures, dry bulb (for gas fired heaters).

9. Test and record heating apparatus leaving air temperatures, dry build (for gas fired heaters).

D. Verification:

1. Prepare summation of readings of observed cfm for each system, compare with required cfm, and verify that duct losses are within specified allowable range.

2. Verify design cfm at fans as described above.

3. If the air systems are not properly balanced, CONTRACTOR shall rebalance and recheck all data in the presence of the ENGINEER.

3.4 AUTOMATIC CONTROL SYSTEM

A. In cooperation with the control manufacturer's representative, set and adjust automatically operated devices to achieve required sequence of operations.

B. Testing organization shall verify all controls for proper calibration and list those controls requiring adjustment by control system installer.

3.5 MAINTENANCE AND REPAIR

A. Maintenance and Repair:

1. Provide all labor, tools and equipment to provide a preventive maintenance program and make repairs for all equipment and controls for a one year period after final acceptance by OWNER. CONTRACTOR shall provide the following services for the same period of one year:

a. Receive calls for all problems and take steps to immediately correct deficiencies which may exist.

b. Provide a semi-annual inspection of all equipment, and record the findings on a check list hereinafter specified.

c. Provide a preventive maintenance schedule for the principle items of equipment.

B. Check List:

1. Provide a check list and post a copy of it where directed by OWNER.

2. Include each piece of equipment specified or shown.

3. Provide 2 columns for required semi-annual inspections.

4. Provide columns for the following:

a. Equipment condition.

b. Equipment operation.

c. Equipment lubrication.

d. Preventive maintenance.

Preventive maintenance shall be performed in accordance with the manufacturers' recommendations and accepted practice.

3.7 MANUFACTURER'S SERVICES

A. Furnish services of a qualified factory-trained serviceman to assist in the installation of the equipment, check the installation before it is placed into operation, supervise initial operations and instruct plant operators in the care, operation and maintenance of the equipment.

B. Serviceman shall not make less than two visits to the site. The first visit shall be for a period of not less than one 8-hour day to assist in the installation of the equipment. The second visit shall be for a period of not less than one 8-hour day to check the completed installation, to perform the tests, and to instruct plant operators in the proper care, operation and maintenance of the equipment. At least 48 hours advance notice shall be provided prior to instruction period. Informal or unwitnessed instructions or instructions to nondesignated personnel will not be recognized.

END OF SECTION 15990

SECTION 16010
GENERAL ELECTRICAL PROVISIONS

PART 1 GENERAL

1.1 SECTION INCLUDES

A. Furnish and install all required electrical Work.

1.2 COORDINATION

1. Review installation procedures under other Sections and coordinate the installation of items that must be installed with the formwork, walls, partitions, ceilings and panels.

2. Coordinate the electrical Work with the work by others including electrical work furnished Sections 13000.

1.3 GENERAL

1. Dimensions shown on the Drawings that are related to equipment are based on one manufacturer's equipment. Coordinate the dimensions of the equipment furnished with the space allocated for that equipment.

2. The Drawings show the principal elements of the electrical installation. They are not intended as detailed working drawings for the electrical Work but as a complement to the Specifications to clarify the principal features of the electrical systems.

3. It is the intent of this Section that all equipment and devices, furnished and installed under this and other Sections, be properly connected and interconnected electrically with other equipment so as to render the installations complete for successful operation, regardless of whether all the connections and interconnections are specifically mentioned in the Specifications or shown on the Drawings.

4. Mounting heights of switches, receptacles, fixtures and other devices noted in the Specifications and on the Drawings are to the bottom of the device.

1.4 QUALITY ASSURANCE

A. Requirements of Regulatory Agencies:

1. Permits: Obtain all permits required to commence Work and, upon completion of the Work, obtain and deliver to the ENGINEER a Certificate of Inspection and Approval from the State Board of Fire Underwriters or other authority having jurisdiction.

2. Codes: Material and equipment shall be installed in accordance with the current standards and recommendations of the National Electrical Code, the National Electrical Safety Code and with local codes which apply. Where discrepancies arise between codes, the most restrictive regulation shall apply.

3. Tests by Independent Regulatory Agencies: Electrical material and equipment shall be new and shall bear the label of the Under-writers' Laboratories, Inc., or other nationally-recognized, independent testing laboratory, wherever standards have been established and label service regularly applies.

B. Reference Standards: Electrical material and equipment shall conform in all respects to the latest approved standards of the following:

1. National Electrical Manufacturers Association (NEMA).

2. The American National Standards Institute (ANSI).

3. The Institute of Electrical and Electronic Engineers (IEEE).

4. Insulated Power Cable Engineers Association (IPCEA).

5. National Electrical Code (NEC).

6. National Electrical Safety Code (NESC).

1.5 SUBMITTALS

A. Shop drawings shall include the following information to the extent applicable to the particular item:

1. Manufacturer's name and product designation or catalog number.

2. Electrical ratings.

3. Conformance to applicable standards or specifications of ANSI, ASTM, ICEA, IEEE, ISA, NEC, NEMA, NFPA, OSHA, UL, or other organizations.

4. Dimensioned plan, section, and elevations showing means for mounting, conduit connection, and grounding.

5. Materials and finish specification, including paints.

6. List of components including manufacturer's names and catalog numbers.

7. Internal wiring diagram indicating all connection to components and numbered terminals for external connections.

8. Manufacturer's instructions and recommendations for installation, operation, and maintenance.

9. Manufacturer's recommended list of spare parts.

1.6 PROJECT CLOSEOUT

A. Operation and Maintenance Data: Conform to requirements of Section 01XXX.

B. Provide certificate of compliance from State Board of Fire Underwriters or other authorities having jurisdiction upon job completion prior to submission of final payment.

C. Record Drawings: In addition to the requirements of Section 01XXX the record drawings shall include the following:

1. One line wiring diagrams of the 277/480 volt and 120/208 volt distribution systems.

2. Actual in place conduit and cable layouts with schedule of conduit sizes and number and size of conductors.

3. Layouts of the lighting arrangements.

4. Control wiring diagrams with terminal numbers and all control devices identified.

1.7 PRODUCT DELIVERY

A. Delivery of Materials: CONTRACTOR shall instruct the manufacturers and vendors as to the maximum shipping sizes of equipment that can be accommodated at the site.

B. Storage: Electrical equipment and material shall be stored and protected in accordance with Sections 1G17, "Storage of Material".

1.8 IDENTIFICATION OF EQUIPMENT

A. All electrical items shall be identified. Identification shall be in addition to the manufacturer's nameplates and shall serve to identify the item's function and the equipment or system which it serves or controls.

B. All new equipment shall be identified by means of laminated phenolic nameplates incised to show one-inch high, white letters on a black background. Labels shall be fastened by means of 3/16-inch diameter, round-head, stainless steel, self-tapping screws. Equipment whose designation has been changed shall be relabeled accordingly.

C. Wires and cables shall be color coded and identified by means of wire markers.

D. Raceways shall be identified by means of brass tags.

E. Pull and junction boxes shall be identified with laminated phenolic nameplates showing the names of the feeders or system wires and cables passing through them.

F. The text, size, and type of lettering, and the location of identifying labels or tags, shall be submitted for approval.

1.9 JOB CONDITIONS

A. CONTRACTOR shall examine the site and existing facilities in order to compare them with the Drawings and Specifications with respect to the conditions of the premises, location of and connection to existing facilities and any obstructions which may be encountered.

B. CONTRACTOR is cautioned to perform his work with due regard to safety and in a manner that will not interfere with the existing equipment or in any way cause interruption of any of the functions of the plant.

C. Work shall be carried out with a minimum amount of disruption to the operation of the existing plant and with prior approval of OWNER. The CONTRACTOR shall submit, for approval, a detailed written procedure for work which affects operation of the existing plant, a detailed procedure for modifying any existing electrical equipment, and anticipated time required to complete the work and the required shutdown time, if any.

D. Where the work of the CONTRACTOR ties in with existing installations, the CONTRACTOR shall take prior precautions and safeguards in connecting the new work with the existing operating circuits so as to prevent extended interruption to the normal operation of the existing equipment or existing operating circuits. The tying in of new work, installed under this Contract, with the existing circuits shall be performed only in the presence of the OWNER. Advance notice will be required before any equipment is removed from service. The CONTRACTOR shall notify OWNER in writing of his intention to do such work, giving full details.

1.10 AREA CLASSIFICATIONS

A. Wet Locations: The following areas shall be considered wet locations:

1. All outdoor areas.

2. All indoor areas below grade unless otherwise specified.

3. Indoor areas above grade where designated on the Drawings. Materials, equipment and incidentals in areas identified as wet locations shall meet NEC and NEMA requirements for wet locations. Enclosures installed in wet locations shall meet NEMA 4 requirements as a minimum and NEMA 4X requirements where specified. Conduits shall be terminated at enclosures with watertight, threaded hubs.

END OF SECTION 16010

SECTION 16050
CABLE TRAY

PART 1 GENERAL

1.1 SECTION INCLUDES

A. In Building No. 15, install ladder type cable tray.

B. Coordination: Tray runs are diagrammatic. Coordinate tray installation with other elevated work and equipment and locate so as to avoid interferences.

1.2 SUBMITTALS

A. Shop Drawings: Submit for approval the following:

1. Manufacturer's catalog cuts and technical information for the tray, fittings and supports proposed for use.

B. Record drawings to provide actual routing of tray runs on record drawings.

PART 2 MATERIALS

2.1 MATERIALS

A. Aluminum ladder - type cable tray

1. Tray shall be heavy-duty aluminum ladder-type, 6 inches deep and having 9-inch rung spacings for straight sections. All fittings are to have 9-inch rung spacing along centerline. All side rails are to be channels for optimum strength for both vertical and horizontal loads.

2. Splice plates are to be connected to the side channels in a manner such that the resistance between splice plates and side channel is no greater than that required by NEMA standard VE-1 (capable of retaining full fault current return path between plate and side channel).

PART 3 - EXECUTION

3.1 INSTALLATION

A. All cable trays shall be grounded in accordance with NEC Article 318-6

1. The use of cable trays as a fault return path is permitted where suitable bolted mechanical splices are used.
2. Where the cable tray/conduit raceway system is used as the ground circuit return path, install a conduit to tray clamp;
   Thomas & Belts 6200 series or Crouse-Hinds type LCCF.
3. Grounding of the cable support system shall be visually inspected to assure conformance to NEC Article 250 and other sections of this specification.
4. Cable tray bonding jumpers shall be installed at expansion joints, discontinuous tray sections, and power source equipment.
5. Cable tray shall be bonded to the grounding electrode system (earth) at all power sources such as substations, switchgear, and motor control centers. Bonding conductors for aluminum cable tray shall be No. 2/0 copper of No. 4/0 aluminum.
6. Cable tray discontinuous sections and expansion connection plates shall be bonded with the same size bonding conductors that are used to bond the cable tray system to the grounding electrode system (earth), and shall be installed as shown on drawings and sketches.

END OF SECTION

SECTION 16111
RIGID CONDUIT

PART 1 - GENERAL

1.1 SECTION INCLUDES

A. Furnish and install conduits, fittings, and pullboxes to form complete, coordinated and grounded raceway systems.

1.2 COORDINATION

A. Conduit runs shown are diagramatic. Coordinate conduit installation with piping, ductwork, lighting fixtures and other systems and equipment and locate so as to avoid interferences.

1.3 RELATED WORK

1. Section 16112, Flexible Conduits.

1.4 QUALITY ASSURANCE

A. Reference Standards: Comply with applicable provisions and recommendations of the following except where otherwise shown or specified:

1. NEC Article 346, Rigid Metal Conduit.
2. NEC Article 347, Rigid Nonmetallic Conduit.
3. UL Standard No. 6, Rigid Metal Electrical Conduit.
4. UL Standard No. 514, Electrical Outlet Boxes and Fittings.
5. UL Standard No. 651, Schedule 40 and 80 PVC Conduit.
6. UL Standard 1242, Intermediate Metallic Conduit.
7. ANSI C80.1, Specification for Zinc Coated Rigid Steel Conduit.
8. ANSI C80.4, Specification for Fittings for Rigid Metal Conduit and Electrical Metallic Tubing.

9. NEMA TC2, Electrical Plastic Tubing, Conduit and Fittings.

10. NEMA TC3, PVC Fittings for Use with Rigid PVC Conduit and Tubing.

1.3 SUBMITTALS

A. Shop Drawings: Submit for approval the following:

1. Manufacturer's catalog cuts and technical information for the conduit, fittings and supports proposed for use.

2. Layout drawings showing proposed routing of exposed conduits. Drawings shall show locations of pull and junction boxes and all penetrations in walls and floor slabs.

B. Record Drawings: Include the actual routing of exposed conduit runs on record drawings.

PART 2 - PRODUCTS

2.1 MATERIALS

A. Rigid Steel Conduit, Elbows and Couplings:

1. Material: Rigid, heavy wall, mild steel, hot dip galvanized, inside and out smooth interior, tapered threads and carefully reamed ends; 3/4-inch NPS minimum size.

2. Manufacturers: Provide material manufactured by one of the following:

a. Allied Tube and Conduit Corporation.

b. Republic Steel Corporation.

B. PVC Coated Rigid Steel Conduit, Elbows and Couplings:

1. Material: Rigid, heavy wall, mild steel, hot dip galvanized inside and out, smooth interior, tapered threads, carefully reamed ends, 3/4-inch NPS minimum size with a factory coating of 40 mil thick polyvinyl chloride, outside, 3 mil phenolic coating inside.

2. Color: Color of coating shall be the same on all conduit and fittings.

3. Manufacturers: Provide material manufactured by one of the following:

   a. Robroy Industries.

   b. Republic Steel Corporation.

C. Conduit Fittings and Outlet Bodies:

1. Material and Construction: Cast gray iron alloy or cast malleable iron bodies and covers. Outdoor units to be gasketed and watertight. Gaskets to be of an approved type designed for the purpose. Improvised gaskets not acceptable. All units to be threaded type with five full threads. Material to conform to ANSI C80.4 and be listed by UL. Fittings and bodies in or on PVC coated conduit runs to have a factory-applied coating of 40 mil thick polyvinyl chloride.

2. Manufacturers: Provide material manufactured by one of the following:

   a. Crouse-Hinds Company.

   b. Appleton Electric Company.

   c. Robroy Industries.

D. Conduit Hubs:

1. Material: Threaded conduit hub, vibration proof, weather proof with captive o-ring seal, zinc metal with insulated throat. Hubs used on PVC cated conduit systems shall have a factory applied PVC coating.

2. Use: Provide for all conduit terminations to boxes, cabinets and other enclosures located in areas designated as wet locations.

3. Manufacturer: Provide material manufactured by Myers Electrical Products Company.

E. Conduit Tags:

1. Material: 19 gauge, 1-1/2-inch diameter round brass with backfilled legend, Style #250-BL as manufactured by Seton Nameplate Corporation.

F. 1. Wireway: Oil tight, lay in type, JIC complete with all connections and fittings as manufactured by Square D Co.

PART 3 EXECUTION

3.1 INSTALLATION

A. Install in conformance with National Electrical Code requirements.

B. Dissimilar Metals:

1. Take every action to prevent the occurrence of electrolytic action between dissimilar metals.

2. Do not use copper products in connection with aluminum work, and do not use aluminum in locations subject to drainage of copper compounds on the bare aluminum.

C. Supports:

1. Rigidly support conduits by clamps, hangers, channels or conduit racks.

2. Support single conduits by means of one-hole pipe clamps in combination with one-screw back plates, to raise conduits from the support surface. Support multiple runs of conduits on trapeze type hangers with steel horizontal members and threaded hanger rods, Kindorff or equal. Rods shall be not less than 3/8-inch diameter, and shall be cadmium coated.

3. For PVC coated rigid steel conduit runs, supports and hardware shall be PVC coated or stainless steel.

4. One-piece Nylon 12 corrosion resistant supports or clamps similar to "Clic" devices by Litchfield International Inc. may be used.

D. Fastenings: Fasten raceway systems rigidly and neatly to supporting structures by the following methods:

1. To Wood: Wood screws.

2. To Hollow Masonry Units: Toggle bolts.

3. To Brick Masonry: Price expansion bolts, or equal.

4. To Concrete: Phillips; Hilti Corporation; or equal, anchors.

5. To Steel: Welded threaded studs, beam clamps or bolts with lockwashers or locknuts.

6. In corrosive areas metallic bolts, screws, clips, etc. shall be stainless steel.

7. To any of the above: Nylon 12 "Clic"devices by Litchfield International Inc.

E. Plug or cap conduit ends at the time of installation to prevent the entrance of moisture and foreign materials.

F. Empty Conduits:

1. Install nylon pull wire in each empty conduit and cap conduits not terminating in boxes with permanent fittings designed for the purpose.

2. Identify each empty conduit with a durable tag showing the conduit number indicated on the Drawings.

G. Orientation:

1. Install parallel or perpendicular to structural members or walls, unless concealed.

2. Wherever possible, run in groups.

3. Install on structural members in protected locations.

4. Locate clear of interferences.

5. Locations on Drawings are approximate.

H. Clearance: Maintain 6 inches from hot fluid lines and 1/4 inch from walls.

I. End Cuts: Square and ream to prevent damage to wire and cable.

J. Field Bends: No indentations. Diameter of conduit shall not vary more than 15 percent at any bend.

K. Threads:

1. Apply conductive compound, Kopr-Shield by T&B Corporation to all joints before assembly.

2. Make up joints tight and ground thoroughly.

3. Conduit and fitting threads to be standard tapered pipe threads. Standard straight thread conduit couplings permitted only on exposed indoor conduit runs. Running threads not permitted.

4. Use strap wrenches and vises to install conduit. Conduit with wrench marks shall be replaced.

L. Insulated Bushings:

1. Provide insulated bushings on all conduits entering boxes or cabinets.

2. Provide locknuts on both inside and outside of enclosures except where threaded humbs are provided.

3. Bushings not to be used in lieu of locknuts.

M. Vertical Drops:

1. Rigidly support from equipment or building.

2. Unsecured drop length not to exceed 12 feet.

3. Install vertical runs plumb. No diagonal runs.

N. Thruwall Seals: Install for conduits passing through exterior subsurface walls or base slabs of buildings.

O. Drainage:

1. Pay particular attention to drainage for conduit runs.

2. Wherever possible, install conduit runs so as to drain to one end and away from buildings.

3. Take extreme care to avoid pockets or depressions in conduit.

P. Conduit Curb:

1. In concrete slabs or floors, provide a two inch high curb extending two inches from the outer surface of the conduit penetrating the floor, to prevent corrosion.

2. Terminate conduit stub-ups in couplings, slightly above the finished concrete curb.

Q. Couplings: Provide full threaded conduit couplings. Split couplings shall not be permitted.

R. For individual exposed conduits passing through walls, install nonmetallic sleeves to protect the conduit against action of alkaline substances which may be present.

S. Before concrete is placed, make the necessary location measurements of the conduit to be embedded so that the information is available to prepare record drawings.

T. PVC Coating: Field apply a 40 mil thick polyvinyl chloride coating to metallic supports and fasteners for PVC coated conduit runs, or use Nylon 12 "Clic" supports.

U. Core drill for individual conduits passing through existing concrete walls or slabs. Obtain authorization from OWNER prior to core drilling. Seal spaces around conduit with epoxy grout.

V. Conduit Racks: Provide galvanized conduit racks of suitable width, length and height and arranged to suit field conditions. Support shall be provided at every ten feet minimum.

U. Signal Conduits: Provide separate steel conduits for 4-20 mA signal cables. Route conduits separate from power conduits and from equipment such as motors, transformers, and inverters, etc. which may generate electrical noise.

3.2 TESTING

A. Test conduits by pulling through each conduit a cylindrical mandrel not less then two pipe inside diameters long, having an outside diameter equal to 90 percent of the inside diameter of the conduit.

B. Maintain a record, by number, of all conduits testing clear.

3.3 IDENTIFICATION

A. Tag all conduits at the ends and in all intermediate boxes, chambers, handholes and other enclosures. Fasten tags to conduits with No. 14 AWG insulated copper wire. Where this method is not practicable, fasten to the adjacent masonry by means of approved expansion screws.

B. Assign serial numbers to all conduits and a record of the conduit numbers and the cable content by cable designation, size, quantity, origin of conductors, and name of equipment served. Submit conduit identification numbering system for approval. Enter the approved conduit identification numbers on as-built drawings.

END OF SECTION 16111

SECTION 16112
FLEXIBLE CONDUITS

PART 1 GENERAL

1.1 SECTION INCLUDES

A. furnish and install flexible metallic conduit and fittings.

1.2 QUALITY ASSURANCE

A. Reference Standards: Comply with applicable provisions and recommendations of the following except where otherwise shown or specified.

1. NEC Article 351, Liquid-Tight Flexible Metal Conduit.

2. UL Standard No. 360, Liquid-Tight Flexible Steel Conduit.

1.3 SUBMITTALS

A. Shop Drawings: Submit for approval the following:

1. Manufacturer's catalog literature, specifications and technical data for flexible conduit and fittings proposed for use.

PART 2 - PRODUCTS

2.1 MATERIALS

A. Flexible Conduit:

1. Material: Flexible galvanized steel core with smooth, abrasionresistant, liquid-tight, polyvinyl chloride cover. Continuous copper ground built in for sizes 3/4-inch through 1-1/4 inch. Material shall be UL listed.

2. Product and Manufacturer: Provide one of the following:

a. Sealtite UA by Anaconda Metal Hose Division, Anaconda American Brass Company.

b. Liquatite Type L.A. by Electric-Flex Company.

B. Flexible Conduit Fittings:

1. Material and Construction: Malleable iron with cadmium finish. Fittings shall adapt the conduit to standard threaded connections, shall have an inside diameter not less than that of the corresponding standard conduit size and shall be UL listed.

2. Manufacturers: Provide products of one of the following:

   a. Crouse-Hinds Company.

   b. Appleton Electric Company.

PART 3 EXECUTION

3.1 INSTALLATION

A. Install at motors and equipment which are subject to vibration or require movement formaintenancepurposes- Provide necessary reducer where equipment furnished cannot accept 3/4-inch size flexible conduit. Limit flexible conduit length to three feet maximum and install only where required as noted above.

B. Install in conformance with National Electrical Code requirements.

END OF SECTION 16112

SECTION 16120
600 VOLT CABLE

PART 1 GENERAL

1.1 SECTION INCLUDES

A. Furnish and install 600 volt cable.

1.2 RELATED WORK

1. Section 16170, Grounding System .

1.3 QUALITY ASSURANCE

A. Requirements of Regulatory Agencies:

1. Codes: Cable shall be installed in accordance with the standards and recommendations of the National Electrical Code and with local codes which apply. Where discrepancies arise between codes, the most restrictive regulation shall apply.

2. Tests by Independent Regulatory Agencies: Cable shall bear the label of the Underwriters' Laboratories, Inc.

B. Reference Standards: Comply with applicable provisions and recommendations of the following except where otherwise shown or specified:

1. ASTM B 3, Soft or Annealed Copper Wire.

2. ASTM B 8, Concentric-Lay-Stranded Copper Conductors, Hard, Medium-hard or Soft.

3. IPCEA S-66-524, NEMA WC7-1971, Cross-linked-thermosetting-polyethylene-insulated Wire and Cable for the Transmission and Distribution of Electrical Energy.

4. National Electrical Code.

5. UL Standard No. 44, Wires and Cables, Rubber-Insulated.

1.3 SUBMITTALS

A. Shop Drawings: Submit for approval the following:

1. Manufacturer's literature, specifications, and engineering data for 600 volt insulated cable.

B. Test Records: Submit for review copies of written records of field insulation resistance test results.

PART 2 - PRODUCTS

2.1 MATERIALS

A. Insulated Cable In Raceways:

1. Material: Single conductor copper cable conforming to ASTM B 3 and B 8 with flame-retardant, moisture and heat resistant cross-linked polyethylene or thermoplastic insulation rated 90C in dry locations and 75C in wet locations and listed by UL as Type XHHW or THHN/THWN.

2. Application: Use XHHW for #4 and larger and THHN/THWN or XHHW for #6 and smaller.

3. Wire Sizes: Not smaller than No. 12 AWG for power and lighting and No. 14 AWG for control.

4. Stranding: All 600 volt cable shall be stranded except that solid cable, size 12 and smaller may be used for lighting circuits.

5. Product and Manufacturer: Provide material manufactured by one of the following:

a. The Okonite Company.

b. Pirelli Cable Corporation.

B. Multi-Conductor Aerial Cable:

1. Provide assembly of 3-1/C-X HHW-500MCM and 1-1/c #4/OX HHW cabled together with stranded copper-clad steel messenger and copper banding strip.

2. Messenger shall be 9/16" diameter formax span of 150' feet with sag of 2.5' @ 60°F.

C. Cable Connectors, Solderless Type:

1. For stranded wire sizes up to #6 AWG, use compression type.

2. Product and Manufacturer: Provide one of the following:

a. T&B Sta-Kon.

b. Burndy Hylug.

3. For sizes #4 AWG and above, use either compression type or bolted type with silver-plated contact faces.

4. For sizes #250 MCM and larger, use connectors with at least 2 cable clamping elements or compression indents and provision for at least 2 bolts for joining to apparatus terminal.

D. Cable Markers:

1. Product and Manufacturer: Provide one of the following:

a. Omni-Grip by W.H. Brady Company.

PART 3 - EXECUTION

3.1 INSTALLATION

A. Install all cables complete with proper terminations at both ends. Check and correct for proper phase sequence and proper motor rotation.

B. Pulling:

1. Use insulating types of pulling compounds containing no mineral oil.

2. Pulling tension shall be within the limits recommended by the wire and cable manufacturer.

3. Use a dynamometer where mechanical means are used.

4. Cut off section subject to mechanical damage.

C. Bending Radius: Limit to 6 times cable overall diameter.

D. Slack: Provide maximum slack at all terminal points.

E. Splices:

1. Where possible, install cable continuous, without splice, from termination to termination.

2. Where required, splice in junction box using terminal boards.

3. Splices in conduits not allowed.

F. Identification: Identify all conductors by circuit number and phase at each terminal or splice location.

G. Color code power cables in accordance with OWNER standard.

3.2 TESTING

A. Test each electrical circuit after permanent cables are in place to demonstrate that the circuit and connected equipment perform satisfactorily and that they are free from improper grounds and short circuits.

B. Individually test 600 volt cables for insulation resistance between phases and from each phase to ground. Test after cables are installed and before they are put in service with a 1000 volt Megger whose rating is suitable for the tested circuit. Tests shall meet with the applicable specifications of IPCEA S-66-524 and NEMA WC7-1971.

C. The insulation resistance for any given conductor shall not be less than the value recommended by the IPCEA or a minimum of 1 megohm for 600 volt and less service, if not IPCEA listed. Any cable not meeting the recommended value or which fails when tested under full load conditions shall be replaced with a new cable for the full length.

END OF SECTION 16120

SECTION 16125
INSTRUMENTATION CABLE

PART 1 GENERAL

1.1 SECTION INCLUDES

A. furnish and install instrumentation cable.

1.2 SUBMITTALS

A. Shop Drawings: Submit for approval the following:

1. Manufacturer's literature, specifications and technical data for instrumentation cable proposed for use.

PART 2 PRODUCTS

2.1 MATERIALS

A. Single Shielded Pairs:

1. Tinned copper, stranded conductors, No. 18 AWG minimum, twisted with aluminum-polyester shield, stranded tinned 20 AWG copper drain wire and overall chrome vinyl jacket. Rated for 300 volts minimum.

2. Products and Manufacturers: Provide one of the following:

a. Okonite Type P-OS.

b. Belden #8760.

B. Multipaired Shielded:

1. Tinned copper, 7 strand XLPE insulated conductors, No. 18 AWG minimum, twisted in pairs with aluminum-mylar shield over each pair, silicone rubber fiberglass fire barrier tape, tinned copper drain wire, aluminum mylar overall shield, Hypalon outer jacket.

2. Products and Manufacturers: Provide one of the following:

a. Okonite Type SP-OS.

b. Dekoron Poly-set.

PART 3 EXECUTION

3.1 INSTALLATION

A. Install instrumentation cables in conduit separate from power cables unless otherwise noted.

B. Ground shield at one end only and as recommended by instrument manufacturer.

C. Terminate stranded conductors with pre-insulated crimp type spade or ring torque terminals.

D. Install and terminate vendor furnished cable in accordance with vendor equipment requirements.

E. Install in conformance with National Electrical Code.

3.2 TESTING

A. Test all 600 volt wiring in conformance with the requirements of Section 16C1, 600 Volt Cable.

B. Test shielded instrumentation cable shields with an ohmeter for continuity along the full length of the cable and for shield continuity to ground.

C. Connect shielded instrumentation cables to a calibrated 3-20milliamp DC signal transmitted and receiver. Test at 4, 12, and 20 milliamp transmitter settings.

END OF SECTION 16125

SECTION 16127
HEAT TRACING CABLE

PART 1 GENERAL

1.1 SECTION INCLUDES

A. Furnish and install freeze protection heat tracing cable.

1.2 SUBMITTALS

A. Detail Drawings: Submit for approval the following:

1. Manufacturer's catalog literature, specifications and technical data for self-limiting heat-tracing cable proposed for use.

PART 2 PRODUCTS

2.1 MATERIALS

A. Tinned copper conductors encased in a conductive/resistive core material, with an insulating inner jacket and outer protective jacket.

B. Product and Manufacture: Provide one of the following:

1. Raychem - Chemelex Auto Trace®

2. Chromalox-Self-Regulating Rapid-Trace®

3. AC Industries - Power Trace®

PART 3 EXECUTION

3.1 INSTALLATION

A. Install on piping, and valves (process and domestic H_2O) subject to freezing. Provide all necessary materials, including power connection kit, splice kits, grommets and end seals.

B. Install in conformance with design specifications, vendor instructions and the NEC.

END OF SECTION 1617

SECTION 16130
PULL AND JUNCTION BOXES

PART 1 GENERAL

1.1 SECTION INCLUDES

A. furnish and install pull and junction boxes.

1.2 QUALITY ASSURANCE

A. Reference Standards: Comply with applicable provisions and recommendations of the following except where otherwise shown or specified:

1. NEC Article 370, Outlet, Switch and Junction Boxes, and Fittings.

2. UL Standard No. 50, Electrical Cabinets and Boxes.

1.3 SUBMITTALS

A. Shop Drawings: Submit for approval the following:

1. Manufacturer's technical information for pull and junction boxes proposed for use.

PART 2 PRODUCTS

2.1 MATERIALS

A. Junction and Pull Boxes:

1. Material and Construction:

a. Cast gray iron alloy or cast malleable iron bodies and covers. Cadmium finish.

b. Neoprene gaskets. Gaskets to be of an approved type designed for the purpose. Improvised gaskets not acceptable.

c. Stainless steel cover screws.

d. External mounting lugs.

e. Drilled and tapped conduit holes.

f. Boxes where conduits enter a building below grade shall have 1/4-inch drain hole.

2. Boxes for damp, wet or corrosive locations shall meet NEMA 4X requirements.

3. Large boxes not available in cast construction shall be fabricated from type 304 stainless steel. Boxes shall have continuously welded seams. Welds shall be ground smooth. Box bodies shall be flanged and shall have no holes or knockouts. Box bodies shall not be less than 14 gauge metal and covers shall not be less than 12 gauge metal. Covers shall be fastened with stainless steel screws. Covers on pull boxes larger than 24-inch x 24-inch shall have handles and shall be reinforced and rigid.

PART 3 EXECUTION

3.1 INSTALLATION

A. Mount boxes so that sufficient access and working space is provided.

B. Securely fasten boxes to walls or other structural surfaces on which they are mounted. Provide independent galvanized steel supports where no walls or other structural surface exists.

C. Install pull boxes in runs containing more than three 90 degree bends, runs exceeding 200 feet, where indicated on the Drawings and where reuqired to conform with the National Electrical Code.

D. Size junction and pull boxes in accordance with the requirements of the National Electrical Code.

E. Provide terminal blocks in junction boxes where junction or splices are required in cables. Terminal blocks shall be so located as to be readily accessible without interference from wire and cables within the box.

END OF SECTION 16130

SECTION 16170
GROUNDING SYSTEM

PART 1 GENERAL

1.1 SECTION INCLUDES

A. Furnish and install complete grounding for the electrical system.

1.2 QUALITY ASSURANCE

A. Reference Standards: Comply with applicable provisions and recommendations of the following except where otherwise shown or specified:

1. NEC Article 250, Grounding.

2. UL Standard #467, Electrical Grounding and Bonding Equipment.

1.3 SUBMITTALS

A. Shop Drawings: Submit for approval the following:

1. Manufacturer's technical information for grounding materials proposed for use.

2. Listing of grounding connector types identifying where they are to be used.

3. Layouts of each structure ground grid.

4. Test point construction details.

5. Results of ground resistance tests are each test point.

PART 2 PRODUCTS

2.1 MATERIALS

A. Bare Ground Cable:

1. Material: Annealed, bare, stranded copper, No. 4/0 AWG minimum size, for ground conductor installed in the earth, No. 6 minimum for equipment ground.

2. Manufacturers: Provide material manufactured by one of the following:

   a. Wire and Cable Division of Cablec Inc.

   b. General Cable Corporation.

   c. Rome Cable Corporation.

B. Ground Rods:

1. Material: Copper clad rigid steel rods, 3/4-inch diameter, 10 feet long.

2. Manufacturer: Provide ground rods by one of the following:

   a. Copperweld, Bimetallics Division.

   b. ITT Blackburn Company.

C. Grounding Connectors:

1. Material: Pressure connectors to be copper alloy castings, designed specifically for the items to be connected, and assembled with Durium or silicone bronze bolts, nuts and washers. Welded connections to be by exothermic process utilizing molds, cartridges and hardware designed specifically for the connection to be made.

2. Product and Manufacturer: Provide material manufactured by one of the following:

   a. Pressure Connectors:

      1) Burndy Corporation.

      2) O.Z./Gedney, Division of General Signal Corporation.

   b. Welded Connections:

      1) Cadweld by Erico Products, Incorporated.

      2) Therm-O-Weld by Burndy Corporation.

PART 3 EXECUTION

3.1 STRUCTURE GROUND SYSTEM

A. Provide a #4/0 bare copper cable ground grid, minimum 2 feet-6 inches below grade, as shown on the Drawings.

B. Install ground rods to provide a resistance to ground of less than 5 ohms.

C. Install #4/0 ground cable from grid to columns as shown on the Drawings. Connect cable to steel using exothermic welds.

D. Connect grids to a continuous underground water pipe system when practical.

E. Provide accessible test point for measuring the ground resistance of each grid.

F. Weld all buried connections except for test point.

3.2 EQUIPMENT GROUNDING

A. Ground all electrical equipment in compliance with the National Electrical Code.

B. Equipment grounding conductors shall be bare stranded copper cable of adequate size installed in metal conduit where necessary for mechanical protection. Ground conductors pulled into conduits with ungrounded conductors shall be insulated, color coded green.

C. Connect ground conductors to conduit with copper clamps, straps or with grounding bushings.

D. Connect to piping by welding or brazing. Use copper bonding jumpers on all gasketed joints.

E. Connect to equipment by means of lug compressed on cable end. Bolt lug to equipment frame using holes or terminals provided on equipment specifically for grounding. Do not use holddown bolts. Where grounding provisions are not included, drill suitable holes in locations designated by the Engineer.

F. Connect to motors by bolting directly to motor frames, not to sole plates or supporting structures.

G. Connect to service water piping by means of copper clamps. Use copper bonding jumpers on all gasketed joints.

H. Scrape bolted surfaces clean and coat with a conductive oxideresistant compound.

3.3 INSTRUMENT GROUND SYSTEM

A. Install ground conductor from incinerator control panel to grid in one inch PVC conduit to isolate conductor from structural steel, or other grounded equipment grounding conductors.

3.4 TESTING

A. Test the complete ground systems for continuity and for resistance to ground using an electrical ground resistance tester.

END OF SECTION 16170

SECTION 16440
DISCONNECT SWITCHES

PART 1 GENERAL

1.1 DESCRIPTION

A. Furnish and install disconnect switches as shown and specified and as required by the National Electrical Code.

1.2 QUALITY ASSURANCE

A. Reference Standards: Comply with applicable provisions and recommendations of the following except where otherwise shown or specified:

1. National Electrical Code.

2. UL #98, Enclosed Switches.

3. NEMA KS-1, Enclosed Switches.

1.3 SUBMITTALS

A. Shop Drawings: Submit for approval the following:

1. Manufacturer's technical information for disconnect switches proposed for use.

PART 2 PRODUCTS

2.1 MATERIALS

A. Disconnect Switches:

1. Type: Unfused, horsepower rated, heavy-duty, single throw, two pole and three pole with visible blade and safety handle.

2. Enclosure: NEMA 12 for dry, indoor locations, and NEMA 4X for indoor damp, wet or corrosive locations and all outdoor locations.

3. Provide nameplate identifying equipment being disconnected.

4. Manufacturers: Provide products of one of the following:

   a. Square D Company.

   b. General Electric Company.

PART 3 EXECUTION

3.1 INSTALLATION

A. Mount equipment so that sufficient access and working space is provided for ready and safe operation and maintenance. Mount all disconnect switches four feet above floor level.

B. Securely fasten equipment to walls or other structural surfaces on which they are mounted. Provide independent galvanized steel supports where no wall or other structural surface exists.

C. Install disconnect switches where shown on the Drawings. In addition, install disconnect switches at each field mounted instrument, device or panel which receives 120, 208, 240 or 480 volt power.

D. Install in conformance with National Electrical Code.

END OF SECTION 16440

SECTION 16461
DRY TYPE TRANSFORMERS

PART 1 GENERAL

1.1 SECTION INCLUDES

A. furnish and install dry type 480 volt - 120/280 volt transformers.

1.2 QUALITY ASSURANCE

A. Reference Standards: Comply with applicable provisions and recommendations of the following except where shown or specified:

1. National Electrical Code - Article 450

2. NEMA Standards

1.3 SUBMITTALS

A. Shop Drawings: Submit for approval copies of manufacturer's technical information for transformers proposed for use.

PART 2 PRODUCTS

2.1 MATERIALS

A. General: Dry type transformers shall be provided as shown on drawings:

1. Service: KVA, and voltage as shown on drawing

2. Use natural air draft as cooling medium

3. Average temperature rise of 55° C (Class A) to 150° C (Class H) and may be forced-air cooled with fans.

4. The insulation materials used do not support flame, (self-extinguishing).

5. Full capacity taps; 2 1/2 percent above and below normal.

B. Product and Manufacture: Provide one of the following:

1. Westinghouse
2. Square D
3. General Electric

PART 3 EXECUTION

3.1 INSTALLATION

A. Install dry type transformer as indicated on power plan.
   1. Terminate all incoming and outgoing wiring in compartment provided.
   2. Identify all terminations.

END OF SECTION 16461

SECTION 16465
CONTROL STATIONS

PART 1 GENERAL

1.1 SECTION INCLUDES

A. Furnish and install pushbuttons, selector switches and other control stations.

1.2 QUALITY ASSURANCE

A. Reference Standards: Comply with applicable provisions and recommendation of the following except where otherwise shown or specified.

1. NEMA Standard ICS2-216, Pushbutton, Selector Switches, Indicating Lights and Pushbutton Stations.

2. National Electrical Code.

1.3 SUBMITTALS

A. Shop Drawings: Submit for approval copies of manufacturer's technical information for control stations proposed for use.

PART 2 PRODUCTS

2.1 MATERIALS

A. Control Stations:

1. Type: Industrial, heavy duty, oiltight construction with clearly marked legend plates.

2. Lockout Stop: Two pushbutton maintained contact type.

3. Pushbutton: Momentary type.

4. Selector Switches: Rotary type with round or oval handles and positioning device to securely hold switch in selected position.

5. Indicating Lights: Transformer type with 6 volt lamp. Lens color red for running, green for stopped or ready and amber for failure.

6. Enclosure: NEMA 12 for dry indoor non-hazardous locations, and NEMA 4X for outdoor and damp, wet or corrosive indoor locations.

7. Nameplates identify equipment controlled if not readily apparent.

8. Products and Manufacturers: Provide one of the following:

   a. Westinghouse Electric Corporation.

   b. General Electric Company.

9. Components for MCC's shall match existing, insofar as same are available.

PART 3 EXECUTION

3.1 INSTALLATION

A. Mount equipment so that sufficient access and working space is provided for ready and safe operation and maintenance.

B. Securely fasten equipment to walls or other surfaces on which they are mounted. Provide independent galvanized steel supports where no wall or other surface exists.

C. Install in conformance with National Electrical Code.

END OF SECTION 16465

SECTION 16470
LIGHTING AND DISTRIBUTION PANELBOARDS

PART 1 GENERAL

1.1 SECTION INCLUDES

A. Furnish and install lighting and distribution panelboards.

1.2 QUALITY ASSURANCE

A. Reference Standards: Comply with applicable provisions and recommendations of the following except where otherwise shown or specified:

1. NEC Article 384, Switchboards and Panelboards.

2. UL Standard #50, Electrical Cabinets and Boxes.

3. UL Standard #67, Electric Panelboards.

4. NEMA PBl, Panelboards.

1.3 SUBMITTALS

A. Shop Drawings: Submit for approval the following:

1. Manufacturer's literature, specifications and technical data for panelboards proposed for use.

PART 2 PRODUCTS

2.1 MATERIALS

A. Panel boards:

1. Rating: Voltage rating, current rating, number of phases, number of wires and number of poles shall be as indicated on the Drawings.

2. Circuit Breakers: Molded case, bolt-in thermal magnetic type with number of poles and trip ratings as shown on the Drawings. Provide ground fault interrupters with trip rating where shown on the Drawings.

3. Branch circuit interrupting capacity minimum 10,000 ampere rms symmetrical; for lighting panels, a minimum 55,000 ampere rms symmetrical for power panel boards.

4. Bus Bars: 98 percent conductivity copper. All 4-wire panelboards shall have a solid neutral bar. All panels shall have ground bus.

5. Main circuit breaker for all panelboards.

6. Branch circuit breakers connected for sequence phasing.

7. Directory: Typed card, with glass cover in frame on back of door giving the circuit numbers and the area or equipment served.

8. Construction Indoor noncorrosive area: Code grade steel, ample gutter space, flush door, flush snaplatch and lock. Surface or flush trim as required.

9. Products and Manufacturers: Provide the following:

   a. INSTRUMENT POWER PANEL #1 (IPP-1)
      Westinghouse Mini-Power Center
      3 phase, 60hz, 480Δ volts to 208Y/120 volts. 15 KVA style No. P48G28T15P
      Main Breaker - EHD3040
      Secondary Breaker - BR350
      Feeder Breakers: (1) - 2 pole 15 amp (GFI)
      (16) - 1 pole 15 amp (GFI)

   b. Power Panel No. 1 (PP-1)
      Westinghouse Mini-Power Center
      3 phase, 60hz, 480Δ volts to 208Y/120 volts. 30 KVA style No. P48G28T30P
      Main Breaker - EHD3070
      Secondary Breaker - EDH3100
      Feeder Breakers: (24) - 1 pole 20 amp

   c. Heat Trace Panel No. 1 (HT-1)
      Westinghouse Mini-Power Center
      3 phase, 60hz, 480Δ volts to 208Y/120 volts. 30 KVA style No. P48G28T30P
      Main Breaker - EHD3070
      Secondary Breaker - EDH3100

Feeder Breakers: (8) - 1 pole 30 amp (GFI)
(6) - 1 pole 20 amp (GFI)

d. Power Panel Wellhouse No. 3 (PPW-3)
Westinghouse Mini-Power Center
3 phase, 60hz, 480Δ volts to 208Y/120 volts. 15 KVA style No. P48G28Ti5P
Main Breaker - EHD3040
Secondary Breaker - BR350
Feeder Breakers: (2) - 3 pole 30 amp (GFI)
(4) - 1 pole 20 amp (GFI)

e. Distribution Panel Wellhouse
Westinghouse POW-R-Line C
100 amp Main Breaker
Feeder Breakers: (1) - 3 pole 25 amp (GFI)
(1) - 1 pole 15 amp (GFI)
space for (6) - 1 pole breakers

PART 3 EXECUTION

3.1 INSTALLATION

A. Mounting: Install panelboards at locations shown on Drawings. Set cabinets so that top branch circuit breaker is not over 6 feet from the floor. Existing panelboards shall remain in place.

B. Directory: Complete typewritten directory indicating items controlled by each circuit breaker and the size of feeder serving the panel.

C. Balance the loads on the panelboards.

D. Modify existing lighting panel, provide new breakers where shown on Contract Drawings. Revise circuit directory to reflect changes.

END OF SECTION 16470

SECTION 16480
MAGNETIC MOTOR STARTERS

PART 1 GENERAL

1.1 SECTION INCLUDES

A. Furnish and install motor starters and circuit breakers in motor control centers and individually enclosed motor starters.

1.2 QUALITY ASSURANCE

A. Reference Standards: Comply with applicable, provisions, and recommendations of the following except where otherwise shown or specified.

1. NEMA Standard ICS2-110, General Standards for Manual and Magnetic Controllers.

2. NEMA Standard ICS2-321 AC General Purpose Class A Controller for Squirrel Cage Induction Motors, 600 volts and less.

3. UL Electrical Construction Materials Directory (NLDX).

4. National Electrical Code.

1.3 SUBMITTALS

A. Shop Drawings: Submit for approval the following:

1. Manufacturer's literature, specifications and technical data for all magnetic motor starters proposed for use, including control schematics and wiring diagrams shown on the drawings and for the reduced voltage auto transformer type.

2. Drawings showing proposed modifications to existing MCC structures and front panels, to accommodate added starters and circuit breakers, etc.

PART 2 PRODUCTS

2.1 MATERIALS

A. General:

1. Type: Magnetic coil operated, FVNR, horsepower rated at 480 volts, 3 pole, with three thermal phase overload protection, set per NEC for motor nameplate full load.

2. Functional Type:

   a. Circuit breaker combination starter with thermal magnetic circuit breaker, with integral current limiting fuse, as required for installation in existing motor control centers.

   b. Auto transformer reduced voltage magnetic starter with taps for 50, 65 and 80 percent with contactors for 2 step starting. Tap shall be set as shown on the drawings or as required to accelerate the motor controlled, along with equipment connected.

3. Enclosures: Existing motor control centers and NEMA-1 enclosure for 250 HP reduced voltage auto-transformer starter.

4. Control power transformer fused on primary with two fuses, fused and grounded on low voltage side for each starter.

5. Auxiliary contacts for motor space heaters, remote status signals and interlocks as shown on the Drawings.

6. Three overload relays of the temperature compensated type with overload heaters sized to coordinate with actual motor nameplate being controlled.

7. Nameplate identifying the equipment controlled.

8. Normally open overload contact for remote malfunction.

B. Products and Manufacturers: Provide one of the following:

1. Westinghouse Electric Corporation.

2. General Electric.

3. Allen Bradley.

PART 3 EXECUTION

3.1 INSTALLATION

A. Mount equipment so that sufficient access and working space is provided for safe operation and maintenance.

B. Securely fasten enclosure to wall or other mounting surfaces. Where local wall is not available, provide galvanized steel supports to rigidly support equipment reasonably close to motor.

C. Modify existing motor control centers as shown on contract drawings. All the circuit breakers to have interrupting capacity and withstand to meet requirements of existing available short circuit. Existing starters, breakers and motor control center were furnished by Westinghouse Electric Corporation. All components shall fit into existing equipment and meet all requirements.

D. Install in conformance with the National Electrical Code.

END OF SECTION 16480

SECTION 16482
MOTOR CONTROL CENTERS

PART 1 GENERAL

1.1 SECTION INCLUDES

A. Furnish and install motor control centers.

1.2 COORDINATION

1. Obtain motor nameplate data on equipment being furnished for properly sizing circuit breakers, starters and overloads.

2. Coordinate motor starter schematics with control requirements of local control panels.

1.3 RELATED SECTIONS

1. Section 03300, Cast-In-Place Concrete.

1.4 QUALITY ASSURANCE

A. Reference Standards: Comply with applicable provisions and recommendations of the following except where otherwise shown or specified:

1. UL Standard #845, Electric Motor Control Centers.

2. NEMA ICS2-322, AC General Purpose Motor Control Centers.

3. National Electrical Code.

1.5 SUBMITTALS

A. Shop Drawings: Submit for approval the following:

1. Manufacturer's technical information for motor control centers proposed for use.

2. Outline and summary sheets with schedules of equipment in each unit.

3. Unit control schematic and elementary wiring diagrams showing numbered terminal points and interconnections to other units.

4. MCC terminal compartment wiring diagrams showing external connections to field devices, control panels and to MCC starter units.

PART 2 PRODUCTS

2.1 MATERIALS

A. General: Motor control center lineups shall be provided as shown on the Drawings.

1. Service: Voltage rating and number of wires shall be as shown on the Drawings. MCC shall operate from a 3 phase, 60 hertz system.

2. Wiring: NEMA Class II, Type B.

3. Enclosure: NEMA 12.

B. Construction:

1. Totally enclosed structure, dead front, consisting of nominal 20- inch deep, 20-inch wide, 90-inch high vertical sections bolted together to form a unit assembly.

2. Removable lifting angles for each shipping section.

3. Two removable floor sills for mounting.

4. Horizontal wireways top and bottom, isolated from horizontal bus and readily accessible.

5. Isolated vertical wireways with cable supports, accessible through hinged doors, for each controller section.

6. All metal non-conducting parts electrically continuous.

C. Bus System:

1. Rating: Bus bracing and bus current capacities as indicated on the Drawings.

2. All bus bars tin plated copper rated UL heat rise standards.

3. Bus bar connections easily accessible with simple tools.

4. Main Horizontal Bus: Continuous edge mounted, and isolated from wireways and working areas.

5. Vertical Bus: Continuous, and isolated by a glass polyester barrier.

6. Grounding Bus: Full length mounted across the bottom, drilled with lugs of appropriate capacity as required.

7. Neutral Bus: Insulated, continuous through control center for 4 wire services, drilled with lugs of appropriate capacity as required.

D. Unit Compartments:

1. Individual front door for each unit compartment with engraved nameplate identifying equipment. Nameplates to be 1 inch by 3 inches minimum, secured to unit door with two screws.

2. Starter and feeder-unit doors interlocked mechanically with the unit disconnect device to prevent unintentional opening of the door while energized and unintentional application of power while door is open, with provisions for releasing the interlock for intentional access and application of power.

3. Padlocking arrangement permitting locking the disconnect device in the OFF position with at least three padlocks with the door closed or open.

4. NEMA 1 minimum motor starter size. Starter units completely drawout type in Sizes 1 and 2 and drawout type after disconnecting power leads only in Sizes 3 and 4.

5. Motor starters shall include a magnetic contactor, NEMA rated with encapsulated magnet coils. Wound coils not acceptable.

6. Reversing Starters: Single speed full voltage with two contactors and extra interlocking contacts.

7. Reduced Voltage Starters: Autotransformer, closed-transition type with embedded type overtemperature protection. Set on 65 percent starting tap unless otherwise noted.

8. Overload Relays: Three melting alloy type, manually reset from outside the enclosure by means of an insulated button with normally open auxiliary contact for remote alarm purposes and separate heater elements sized for the full load amperes and service factor of the actual motors furnished.

9. Individual control power transformers for all starters, capacity as required for all control circuit devices, 10OVA minimum, Class A insulation, two primary fuses, 120 volt secondary, one secondary fuse and the other secondary leg grounded.

10. Separate Control: Where control power to starter is provided by a separate power source, a control power fuse shall be provided in the unit and the main disconnect shall be equipped with a normally open contact to isolate the control circuit from the source when the controller disconnect is open.

11. Motor horsepowers shown are preliminary. Circuit breaker trips and starter overload heaters to be coordinated with the actual equipment installed.

12. Auxiliary contacts, relays, timers as required for specified control functions and those shown on the Drawings.

13. All starter devices, including spare contacts wired to numbered terminal blocks.

14. Control devices shall be 600 volt heavy duty, NEMAA600. Relays shall have convertible contacts. Pilot devices shall be oiltight. Pilot lights shall be transformer type with 6 volt secondary.

15. Feeder Circuit Breakers: Thermal magnetic type.

16. Motor Starter Circuit Breakers: Magnetic trip only motor circuit protectors.

17. Terminal Compartments: Provide separate compartments in each motor control center complete with terminal blocks for terminating external control wiring to the incinerator and automatic temperature control panels. Connections between the terminal compartments and MCC starter units shall be factory wired.

18. Provide the following diagrams and tables on the inside of the door for each compartment: a. Elementary wiring diagram.

    b. Table of overload heater sizes with the correct heater high-lighted.

c. Table of the motor circuit protector settings with the correct setting highlighted.

E. Spare Parts:

1. Provide the following spare parts for each motor control center lineup:

a. Two fuses of each size and type used.

b. One auxiliary control relay with at least two normally open and two normally closed contacts.

c. One control transformer of each size used.

d. Twelve indicating lamps.

2. Package spare parts in suitable containers bearing labels clearly indicating the contents and equipment with which they are to be used. Deliver spare parts at the same time as the motor control centers.

F. Product and Manufacturer: Provide motor control centers of one of the following:

1. Westinghouse Series 2100

2. Square D Company, Model 4

3. General Electric Co. 8000 Line

PART 3 EXECUTION

3.1 INSTALLATION

A. Install on raised concrete base at locations shown on the Drawings. Install support channels in concrete per manufacturer's recommendations.

B. For installations against masonry walls, provide an insulation board, 1/4 inch minimum thickness, between motor control center and wall for corrosion protection. Trim board neatly within outline of unit.

C. Provide no openings in top or side of units not required for conduit.

D. Cable circuits together within enclosures and identify with durable tag secured to cabling twine.

E. Set motor circuit protectors at lowest setting which permits motor starting without nuisance tipping.

F. Field test all motor control center components.

G. Verify that wiring diagrams on inside of door of each compartment reflects the "as-built" circuitry and that the correct overload heater size and motor circuit protector setting are noted.

H. Install in conformance with the National Electrical Code.

3.2 MANUFACTURER TRAINING SERVICES

A. CONTRACTOR shall furnish the services of qualified factory trained specialists from the manufacturer to instruct OWNER'S operations and maintenance personnel in the recommended operation and maintenance of this equipment.

END OF SECTION 16482

SECTION 16500
LIGHTING FIXTURES

PART 1 GENERAL

1.1 SECTION INCLUDES

A. Furnish and install lighting fixtures and to revise and reconnect existing lighting and receptacle systems.

1.2 QUALITY ASSURANCE

A. Reference Standards: Comply with applicable provisions and recommendations of the following except where otherwise shown or specified:

1. National Electrical Code.
2. UL Standard #57, Electric Lighting Fixtures.
3. UL Standard #1570, Fluorescent Lighting Fixtures.
4. UL Standard #1571, Incandescent Lighting Fixtures.
5. UL Standard #1572, High Intensity Discharge Lighting Fixtures.

1.3 SUBMITTALS

A. Shop Drawings: Submit for approval the following:

1. Manufacturer's catalog literature, specifications, photometric data and other technical information for lighting fixtures proposed for use.

PART 2 PRODUCTS

2.1 MATERIALS

A. Type: Lighting fixtures are noted in the Fixture Schedule at the end of this Section. Fixtures to be complete with supports, ballasts, lamps and incidentals as required.

B. Lamps:

1. Fluorescent: Warm white, energy efficient type.

2. High Pressure Sodium: Coated.

C. Ballasts:

1. Fluorescent: High power factor, energy efficient type, equipped with thermal protectors (Type "P" Ballast), compatible with lamps installed.

2. High Intensity Discharge: High power factor, constant wattage, stabilized autotransformer with line starting current the same or less than operating current. Low temperature (minus 20°C) where specified.

3. Ballasts to have "C" sound rating (min.) and be ETL/CBM certified.

4. Fixtures with 2-two lamp ballasts shall be wired with outboard lamps on one ballast and one circuit, and inner lamps on one ballast on second circuit. Ballasts shall be capable of operating on power supplies having up to 70 percent harmonic distortion.

D. Hardware: All necessary hangers, supports, conduit adapters, reducers, hooks, brackets and other hardware required for safe fixture mounting shall be furnished. Hardware shall have a protective, non-corrosive finish.

PART 3 - EXECUTION

3.1 INSTALLATION

A. General: Fixture mounting heights and locations indicated on the Drawings are approximate and are subject to revision in the field where necessary to clear conflicts and obstructions.

B. Suspended Fixtures: Pendant mount using 1/2-inch conduit stems. Ground to outlet box. Attach mounting to building structure with expansion anchors. Fixtures shall not be dependent upon the outlet box cover screws for support, unless approved by the ENGINEER.

C. Surface Mounted Fixtures: Attach to appropriate outlet box.

D. Boxes and Fixtures:

1. For units mounted against masonry or concrete walls, provide suitable 1/2-inch spacers to prevent mounting back of box directly against wall.

2. Bolt units rigidly to building with expansion anchors, toggle bolts, hangers or Unistrut.

3. No boxes shall be installed with open conduit holes.

4. Cable each circuit and identify with tag.

E. Mounting Heights: Mounting heights or elevations are to bottom of the fixture or to centerline of device.

F. Install fixtures in conformance with the National Electrical Code.

G. Existing fixtures which are temporarily removed and reinstalled shall be cleaned, repaired and relamped with new lamps of the same wattage and type as existing.

LIGHTING FIXTURE SCHEDULE

Type	General Description	Mfgr. & Cat No.
B	Wall mounted, enclosed & gasketed, fixture with borosilicate prismatic glass refractor for 100 watt HPS lamp, HPF ballast with 120 volt fused primary.	Holophane # WL2K-100HP12GR-F1 HiTek-TW 100S-SF
E	Shall be on adjustable sealed beam floodlight for operation on a 24 Volt DC battery power supply. Batteries per Notes A&B below.	Dual-Lite Model NF-600-28 Watt Orthobeam 28 Watt Fixture Emergi-lite Double 18 Watt High Intensity Incandescent, EF-9D or equal.
F	Pendant mounted industrial open fluorescent fixture, 4' long with 2x40 W RS lamps, 120 volt, Imperial, white porcelain enameled reflector, with 20-30% uplight.	Miller Cat. No. IL-2101-04-120V
FC	Surface mounted, fluorescent fixture with clear acrylic prismatic wrap around diffuser for 2-40W T12 RS 40 watt lamps. Ballast 120 volts.	Lithonia WA-240A-120V Miller DB-2101-04-120V
FL	Same as Type "F" with attached louver.	
FP	Recessed 2'x4' fluorescent troffer for four (4) F40-T12 rapid start lamps with two 2-lamp type "P" 120V ballasts (one for outside lamps). Fixture shall have an aluminum covered parabolic shaped plastic lens 1-1/2"x1-1/2x1" louver in hinged door frame for installation in a grid ceiling with exposed T-bar supports.	Lightolier Ventilline Air Handling Cat. No. 64675 Lithonia 2GP440-PC-2-14QV Lightron AFG440-PC-II (2x4) Keystone #2SG440-PWS-120

H	Ceiling or pendant mounted open industrial type fixture with high bay reflector for 150 watt HPS 100 volt lamp, HPF ballast with 120 volt fused primary and hot instant restrike capability.	Appleton G-HB41AL-MT-HRS Holophane #PP5K150-HP12POM35-F1
H-1	Ceiling or pendant mounted open reflector industrial type fixture for low mounting with 150 watt HPS-IOOV lamp, HPF ballast with 120 volt fused primary.	Appleton G-1M452L-MT, Hitek-TG150SALW-120-SF
H-2	Same as Type "A2" with instant restrike feature to restore lamp output upon return of power supply to fixture.	Appleton G-LM452L-MT-HRE Hitek-TG150SALW-120-SF-Instant Restrike
I	Recessed quare fluorescent fixture with two (2) 13W PL lamps with prismatic glass, dicast aluminum trim. Matte white finish and suitable for damp locations, plaster frame and suitable for operation on 120 volts.	Prescolite Cat. No. CF10SQ2S-1-120V

Note:

(A) Provide 24 volt DC battery power supply for each stairway emergency lighting. Battery system shall be capable of supplying 328 watts for 1-1/2 hours, to not less than 87.5 percent of nominal system voltage (24 V) equal to Dual-LiteModel 120-24-C-L21XL-MON-XBFA, sealed extra long life lead batteries. Including options ACCB-LVD a set and GLS.

(B) Provide 24 volt DC battery power supply for equipment area, control rooms, MCC room etc. Battery system shall be capable of supplying 1700 watts for 1-1/2 hours, to not less than 87.5 percent of nominal. Equal to Dual-Lite Model 120-24-C-L26XL-MON-XBFA, sealed extra long life batteries, including options ACCB-LVD-ASET and GLS.

END OF SECTION 16500