AEI Consultants

Original: September 8, 2017
Revision 1: February 23, 2018
Revision 2: March 22, 2018
Final: April 30, 2018

CORRECTIVE MEASURES IMPLEMENTATION

LOT 1102, 180 MILL STREET, CRANSTON, RHODE ISLAND

VOLUME II

Property Identification:

BASF Former Ciba-Geigy Facility
180 Mill Street
Cranston, Rhode Island

AEI Project No. 363655

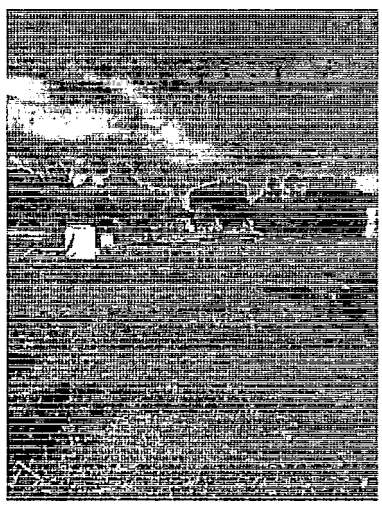

Prepared for:

BASF Corporation
100 Park Avenue
Florham Park, New Jersey 07932

Prepared by:

AEI Consultants
112 Water Street, 5th Floor
Boston, Massachusetts 02109

Gordon R. Archibald, Inc.
200 Main Street
Pawtucket, Rhode Island

San Francisco HQ

Atlanta

Boston

Chicago

Costa Mesa

Dallas

Denver

Los Angeles

Miami

New York

Phoenix

Portland

San Jose

AEI Consultants

SEMS DocID 645501

TABLE OF CONTENTS

Volume I

Title	Tab
Corrective Measures Implementation Work Plan	1
2017 Subsurface Test Pitting Program Technical Memorandum	A
2017 Groundwater Sampling Technical Memorandum	B
July 2017 Risk Assessment/Conceptual Site Model/Preliminary Design Memorandum	C
Human Health Risk Evaluation	D
Final Remedial Design	E
Template Environmental Land Usage Restriction	G
Template Soil and Groundwater Management Plan	H
Soil Erosion and Sediment Control Plan	I
Clean Soil Cover Inspection and Maintenance Plan	J
Health and Safety Plan	K

Volume II

Title	Tab
Appendix F – Sampling and Analysis Plan (SAP)/Quality Assurance Project Plan (QAPP)	F

APPENDIX F
SAMPLING AND ANALYSIS PLAN (SAP) / QUALITY ASSURANCE PROJECT PLAN (QAPP)

AEI Consultants

Original: September 8, 2017
Revision 1: April 30, 2018
Final: May 8, 2018

SAMPLING AND ANALYSIS PLAN (SAP)

Property Identification:
Former Ciba-Geigy Facility
180 Mill Street
Cranston, Rhode Island

Prepared for:
BASF Corporation
100 Park Avenue
Florham Park, New Jersey

Prepared by:
AEI Consultants
112 Water Street, 5th Floor
Boston, Massachusetts

Environmental Due Diligence

Building Assessments

Site Investigation & Remediation

Energy Performance & Benchmarking

Industrial Hygiene

Construction Risk Management

Zoning Analysis Reports & ALTA Surveys

TABLE OF CONTENTS

1.0 INTRODUCTION 1
1.1 Site Name or Sampling Area 1
1.2 Site or Sampling Area Location 1
1.3 Project Organization 1
2.0 BACKGROUND 6
2.1 Site or Sampling Area Description 6
2.2 Operational History 6
2.3 Previous Investigations/Regulatory Involvement 6
2.4 Geological Information 6
2.5 Environmental and/or Human Impact 6
3.0 PROJECT DATA QUALITY OBJECTIVES 8
3.1 Project Objectives and Problem Definition 8
3.2 Data Quality Objectives (DQOs) 8
3.3 Data Quality Indicators (DQIs) and Measurement Quality Objectives (MQOs) 9
3.4 Data Review and Validation 11
3.5 Data Management 13
3.6 Assessment Oversight 14
4.0 SAMPLING RATIONALE 18
4.1 Soil Sampling 18
4.2 Sediment Sampling 18
4.3 Groundwater Sampling 18
4.4 Other Sampling 18
5.0 REQUEST FOR ANALYSES 106
5.1 Analyses Narrative 106
5.2 Analytical Laboratory 108
6.0 FIELD METHODS AND PROCEDURES 199
6.1 Field Equipment 199
6.1.1 List of Equipment Needed 199
6.1.2 Calibration of Field Equipment 199
6.2 Field Screening 199
6.3 Soil 200
6.3.1 Surface Soil Sampling 200
6.3.2 Subsurface Soil Sampling 200
6.4 Sediment Sampling 201
6.5 Water Sampling 201
6.5.1 Surface Water Sampling 201
6.5.2 Groundwater Sampling 201
6.5.2.1 Water-Level Measurements, Purging, and Well Sampling 201
6.6 Other 203
6.7 Decontamination Procedures 203
7.0 SAMPLE CONTAINERS, PRESERVATION, PACKAGING and SHIPPING 207
7.1 Soil Samples 207
7.2 Sediment Samples 207
7.3 Water Samples 207
7.4 Other Samples 208
7.5 Packaging and Shipping 208
8.0 DISPOSAL OF RESIDUAL MATERIALS 209
9.0 SAMPLE DOCUMENTATION AND SHIPMENT 210
9.1 Field Notes and Photographs 210
9.2 Labeling 211
9.3 Sample Chain-Of-Custody Forms and Custody Seals 211
10.0 QUALITY CONTROL 214
10.1 Field Quality Control Samples 214

10.1.1 Assessment of Field Contamination (Blanks) 214
10.1.1.1 Equipment Blanks 214
10.1.1.2 Trip Blanks 214
10.1.1.3 Temperature Blanks 214
10.1.2 Assessment of Field Variability (Field Duplicate or Co-Located Samples) 214
10.2 Laboratory Quality Control Samples 215
11.0 FIELD HEALTH AND SAFETY PROCEDURES 216

List of Tables

Table 1-1: Key Project Personnel Contact Information and Responsibilities
Table 2-1: Contaminants of Concern Concentration Ranges and Cleanup Objectives, (Matrix = Soil and Groundwater)
Table 3-1a: Soil COC Laboratory Reporting Limits and Project Action Levels
Table 3-1b: Groundwater COC Laboratory Reporting Limits and Project Action Levels
Table 4-1: Soil Sampling Design and Rationale
Table 4-2: Groundwater Sampling Design and Rationale
Table 5-1: Soil Analytical Services
Table 5-2: Groundwater Analytical Services
Table 5-3: Soil Analytical Method, Containers, Preservation, and Holding Times Requirements
Table 5-4: Groundwater Analytical Method, Containers, Preservation, and Holding Times Requirements
Table 6-1: Field and Sampling Equipment
Table 6-2: Field Equipment/Instrument Calibration, Maintenance, Testing, and Inspection

List of Figures

Figure 1: Soil Compliance Points
Figure 2: SWMU-8 and SWMU-11 Soil Compliance Points
Figure 3: Groundwater Sampling Points

List of Appendices

Appendix A: Quality Assurance Project Plan (QAPP)

1.0 INTRODUCTION

AEI Consultants (AEI) was contracted by BASF to perform construction phase services for the remediation of Lot 1102 (former production area [FPA]) located at 180 Mill Street, Cranston, Rhode Island (herein referred to as the "Site"). The objectives for the Site remedial approach are included in a Corrective Measures Implementation (CMI) Work Plan, which consists of the following components:

- CMI Work Plan
- CMI Design Scope
- CMI Construction, and
- CMI Reporting

The major elements of the CMI include: removal and disposal of PCB-impacted soils greater than 25 mg/kg (greater than 1 mg/kg in FEMA Floodway), design and implementation of an engineered cap to address direct contact exposure for current and future Site receptors, an Environmental Land Use Restriction (ELUR) limiting future use/development of the Site and a groundwater treatment/monitoring program. As part of the CMI, AEI has prepared this Sampling and Analysis Plan (SAP), which presents the organization, objectives, planned activities, and specific quality assurance/quality control (QA/QC) procedures associated with the sampling activities to be conducted at the Site.

1.1 Site Name or Sampling Area

Lot 1102, which consists of the FPA will be the focus of the remedial effort and this document.

1.2 Site or Sampling Area Location

Lot 1102 consists of approximately 3.25 acres bounded to the west by Mill Street (beyond which are industrial properties [Safety Kleen]), to the north and east by a BASF-owned property which includes a former railroad spur (Lot 2630) beyond which are former Site buildings and residences, to the south and east by the Pawtuxet River. Much of the area has been impacted by historical releases of contaminations. Therefore, several cleanup areas are defined and shown on Contract Drawing, C-4 Remedial Excavation Plan included in Appendix E of the CMI WP.

1.3 Project Organization

Table 1-1 – Key Project Personnel Contact Information and Responsibilities

Title	Name	Phone Number Email Address	Responsibilities
EPA Project Manager	Frank Battaglia	617 918-1362 Battaglia.Frank@epa.gov	Overall regulatory responsibility for all phases of the project.
TSCA Project Manager	Kim Tisa	617.918.1527 Tisa.Kimberly@epa.gov	Overall regulatory responsibility for the PCB TSCA phase of the project.
BASF Project Manager	Dr. Joseph Guarnaccia (BASF)	973-245-5269 Joseph.guarnaccia@basf.com	Review all documents before submission to the agencies.
Construction Management Principal	Stephen Graham (AEI Consultants)	857-350-8519 sgraham@aeiconsultants.com	Provides final corporate approval for technical, schedule, and cost aspects of project; ensures AEI Project Manager has all resources needed, and responsible for client satisfaction.
Construction Management Project Manager (PM)	Richard Kowalski (AEI Consultants)	508-951-3673 rkowalski@aeiconsultants.com	Overall management of technical, schedule, and cost aspects of project.
Construction Management Quality Assurance Officer (QAO)	Dr. Robert Palermo (AEI Consultants)	rsp9968@comcast.net	Overall quality assurance oversight.
Construction Management Field Team Leader	Aaron Ting (AEI Consultants)	978-577-7138 ating@aeiconsultants.com	Overall completion or verification of field activities in accordance with WP and QAPP and is the day-to-day communication link between AEI project management and the field team and Contractors.

Title	Name	Phone Number Email Address	Responsibilities
Soil Remedial Contractor Project Manager (include Company Name)	TBD	TBD	TBD
Soil Remedial Contractor QAO	TBD	TBD	TBD
Soil Remedial Contractor Field Team Leader	TBD	TBD	TBD
ISCO Contractor Project Manager (include Company Name)	David Spader (ERFS)	(914) 834-4195 dspader@erfs.com	Overall day-to-day management of technical and scheduling matters associated with the ISCO persulfate groundwater treatment program.
ISCO Remedial Contractor QAO	TBD	TBD	TBD
ISCO Remedial Contractor Field Team Leader	TBD	TBD	TBD
Laboratory Manager	TBD	TBD	TBD
Laboratory Quality Assurance Officer (include Laboratory Name)	TBD	TBD	TBD

In addition to the general responsibilities listed in Table 1-1, the following roles are provided with further details:

Construction Management Project Manager

- Subcontractor procurement,
- Assignment of duties to project staff and orientation of the staff to the specific needs and requirements of the project,
- Ensuring that data assessment activities are conducted in accordance with the QAPP,
- Approval of project-specific procedures and internally prepared plans, drawings, and reports,
- Serving as the focus for coordination of all field and laboratory task activities, communications, reports, and technical reviews, and other support functions, and facilitating site activities with the technical requirements of the project, and
- Maintenance of the project files.

Construction Management QAO

- Preparing the QAPP,
- Reviewing and approving QA procedures, including any modifications to existing approved procedures,
- Ensuring that QA audits of the various phases of the project are conducted as required,
- Providing QA technical assistance to project staff,
- Ensuring that data validation/data assessment is conducted in accordance with the QAPP, and
- Reporting on the adequacy, status, and effectiveness of the QA program to the AEI Project Manager.

Construction Management Field Team Leader

- Coordinating activities at the site,
- Assigning specific duties to field team members,
- Mobilizing and demobilizing of the field team and subcontractors to and from the site,
- Directing the activities of subcontractors on site,
- Resolving any logistical problems that could potentially hinder field activities, such as equipment malfunctions or availability, personnel conflicts, or weather dependent working conditions,
- Implementing field QC including issuance and tracking of measurement and test equipment; the proper labeling, handling, storage, shipping, and chain-of-custody procedures used at the time of sampling; and control and collection of all field documentation, and
- Communicating any non-conformances or potential data quality issues to AEI project management.

- Conducting the health and safety tailgate meetings, subcontractor site orientation, one of the points of contact for general safety-related questions. The Contractor will be the point of contact in regards to their health and safety plan.

Laboratory Manager

- Implementing and adhering to the laboratory QA manual and all corporate policies and procedures within the laboratory,
- Approving the standard operating procedures (SOPs),
- Maintaining adequate staffing documented on organization charts, and
- Implementing internal/external audit findings corrective actions.
- Acting as a liaison between the client and the laboratory staff,
- Reviewing project data packages for completeness and compliance to client needs, and
- Monitoring, reviewing, and evaluating the progress and performance of projects

Laboratory QAO

- Approving SOPs,
- Assessing and maintaining the laboratory QA manual implementation within the facility operations,
- Recommending resolutions for ongoing or recurrent non-conformances within the laboratory,
- Performing QA assessments, and
- Reviewing and approving corrective action plans for non-conformances, tracking trends of non-conformances to detect systematic problems, and initiating additional corrective actions as needed.

2.0 BACKGROUND

This section provides an overview of the location, previous investigations, and the apparent problem(s) associated with the Site or sampling area.

2.1 Site or Sampling Area Description

The site occupies 3.25 acres in an industrial/commercial area. The site is currently an open vacant lot surrounded by a locked chain link fence. The site is bordered on the north and east by a BASF-owned property which includes a former railroad spur (Lot 2630) beyond which are former Site buildings and residences, and to the south and east by the Pawtuxet River. The specific location of the site is shown in Figure 1 of the CMI WP.

2.2 Operational History

Site operation history and usage can be found in Section 2.1 of the CMI.

2.3 Previous Investigations/Regulatory Involvement

A summary of the previous Site investigations/regulatory involvement can be found in Section 2.3 of the CMI.

2.4 Geological Information

The geologic and hydrogeologic setting information can be found in Section 2.2 of the CMI.

2.5 Environmental and/or Human Impact

The Contaminants of Concern (COCs) are VOCs, primarily toluene, 2-chlorotoluene, chlorobenzene, 1,2-dichlorobenzene, and xylenes, as well as Polychlorinated Biphenyls (PCBs) in both soil and groundwater. Groundwater impacts for PCBs are limited to an area where elevated PCB concentrations in soil were identified, at sample location TP-5, during recent (2017) soil sampling. Human impacts include potential for ingestion and dermal contact to contaminated soils and groundwater. No structures are currently located on-Site so vapor intrusion is currently not a concern. Environmental impacts consist of the potential migration of VOCs into the Pawtuxet River.

Table 2-1: Contaminants of Concern Concentration Ranges and Cleanup Objectives (Matrix = Soil and Groundwater)

Analytical Parameter (Contaminants of Concern)	Date of sampling	Sampling contractor	Laboratory Analytical Results (units)	Regulatory Cleanup Objective
PCBs – Aroclors (Soil)	1990-1994, 2011-2014, 2017	Woodward-Clyde, AECOM, AEI	< 1 to >100,000 mg/kg	25 mg/kg (MPS) 1 mg/kg (TSCA unrestricted use [Floodway only])
PCBs -Aroclors (Groundwater)	1990-1994, 2011-2014, 2017	Woodward-Clyde, AECOM, AEI	Non-detect to 9 µg/L	0.5 µg/L (MCL)
Toluene (Soil)	1990-1994, 2011-2014	Woodward-Clyde, AECOM	0.344 to 811 mg/kg	54 mg/kg (RIDEM GB Leachability)
Toluene (Groundwater)	1990-1994, 2011-2014, 2017	Woodward-Clyde, AECOM, AEI	Non-detect to 33,000 µg/L	1,700 µg/L (MPS and RIDEM GB Objective)
2-Chlorotoluene (Groundwater)	1990-1994, 2011-2014, 2017	Woodward-Clyde, AECOM, AEI	Non-detect to 44,000 µg/L	1,500 µg/L (MPS)
2-Chlorotoluene (Soil)	1990-1994, 2011-2014	Woodward-Clyde, AECOM	Non-detect to 21,300 mg/kg	NA
1,2-Dichlorobenzene (Groundwater)	1990-1994, 2011-2014, 2017	Woodward-Clyde, AECOM, AEI	Non-detect to 45,000 µg/L	94 µg/L (MPS)
1,2-Dichlorobenzene (Soil)	1990-1994, 2011-2014	Woodward-Clyde, AECOM	Non-detect to 0.152 mg/kg	NA
Chlorobenzene (Groundwater)	1990-1994, 2011-2014, 2017	Woodward-Clyde, AECOM, AEI	Non-detect to 13,000 µg/L	1,700 µg/L (MPS)
Chlorobenzene (Soil)	1990-1994, 2011-2014	Woodward-Clyde, AECOM	Non-detect to 210 mg/kg	100 mg/kg (RIDEM GB Leachability)
Xylenes, Total (Groundwater)	1990-1994, 2011-2014, 2017	Woodward-Clyde, AECOM, AEI	Non-detect to 2,030 µg/L	78 µg/L (MPS)
Xylenes, Total (Soil)	1990-1994, 2011-2014	Woodward-Clyde, AECOM	Non-detect to 400 mg/kg	NA

Notes:

TSCA = USEPA Toxic Substances Control Act
MCL = USEPA Drinking Water Maximum Contaminant Level
MPS = Media Protection Standard
RIDEM = Rhode Island Department of Environmental Management

3.0 PROJECT DATA QUALITY OBJECTIVES

This section will describe the purpose of the environmental investigation and how the data will be used to support the verification of site cleanup in accordance with Toxic Substance Control Act (TSCA) and Rhode Island Department of Environmental Management (RIDEM) Remediation Regulations, as presented below.

3.1 Project Objectives and Problem Definition

As discussed above and within the CMI WP, the history of the Site has left a large portion of the site impacted by PCBs exceeding one or more regulatory standards in soil and in a localized area of groundwater on the southern portion of the Site, TP-5. Much of the groundwater located beneath the central and southern portions of the site contains specific COCs (e.g., toluene, chlorotoluene, chlorobenzene, 1,2-dichlorobenzene and xylenes) in excess of MPS as presented in **Table 2-1** above. Sampling will be conducted at the Site in order to document compliance with approved soil and groundwater metrics as stipulated in the CMI WP.

The primary objectives of the CMI are to:

1) Eliminate direct contact to impacted soil through excavation and off-Site disposal of soils containing greater than 25 mg/kg of PCBs. Shallow soils containing greater than 10 mg/kg PCBs will be covered using an engineered barrier (soil cap with underlying permeable geotextile layer), while remaining soils containing greater than 1 mg/kg but <10 mg/kg PCBs shall receive a "clean" soil cap;
2) Remove VOC source delineated at SWMU-11/former Building 11. Source removal will involve excavating shallow soils from a depth of 0-6 feet bgs containing greater than 54 mg/kg toluene (RIDEM GB leachability standard, no such standard exists for 2-chlorotoluene) and 1,00 mg/kg of chlorobenzene (RIDEM GB Leachability standard).
3) Eliminate COC migration: PCBs in groundwater through "hot spot" removal of highly impacted soils and treating VOCs in groundwater using ISCO via persulfate injections and ozone barrier technologies in pilot studies and ultimately full-scale implementation.

3.2 Data Quality Objectives (DQOs)

The data quality objectives (DQOs) are quantitative and qualitative criteria upon which project decisions are based. As mentioned, historical releases at the Site have resulted in contamination to Site soils and groundwater with PCBs and select VOCs. The Site objective is to eliminate those risks associated with the soil and groundwater contamination to current and future receptors through the use of soil removal and disposal and groundwater treatment using chemical oxidants.

The sampling scope of work will be employed to demonstrate compliance with the soil and groundwater cleanup standards as presented in **Table 3-1a** and **Table 3-1b**. Remediation shall be considered complete when all compliance point samples collected in an area show

compliance with those standards. If any compliance points are found above the project action levels, then additional remediation (i.e., soil removal or chemical injection to groundwater) will be used until no COCs above action limits are observed in compliance sample results. Data shall be collected from those designated cleanup areas as defined on the **Contract Drawing, C-4 Remedial Excavation Plan** included in the CMI WP, Appendix E or **ERFS Groundwater Monitoring, Figure 3** attached

3.3 Data Quality Indicators (DQIs) and Measurement Quality Objectives (MQOs)

Data Quality Indicators (DQIs) provide a means to evaluate the quality of data and are normally defined in terms of PARCCS (precision, accuracy, representativeness, completeness, comparability, and sensitivity (method detection limits). Precision, accuracy, and sensitivity are usually covered in method specific criteria, whereas representativeness, completeness, and comparability are defined in this plan for the project as a whole.

Precision

Precision is the degree of mutual agreement between or among independent measurements of a similar property (usually reported as a standard deviation [SD] or relative percent difference [RPD]). This indicator relates to the analysis of duplicate laboratory or field samples. Typically, field precision is assessed by co-located samples, field duplicates, or field splits and laboratory precision is assessed using laboratory duplicates, matrix spike duplicates, or laboratory control sample duplicates. Field precision is assessed through the collection and measurement of field duplicates at a rate of one (1) duplicate per twenty (20) analytical samples, per matrix, per sampling technique.

Precision will be measured through the calculation of the RPD. The objective for field precision is < 30% RPD for aqueous samples, and < 50% RPD for solid samples, where results are reported at greater than 5 times the reporting limit.

Precision in the laboratory is assessed through the calculation of RPD for duplicate samples, either as matrix spike/matrix spike duplicates (MS/MSDs) or as laboratory duplicates. The precision objectives, as measured by RPDs, will be the control limits generated by the laboratories that are current at the time of analyses.

Accuracy

Accuracy is the degree of agreement of a measurement with a known or true value and includes a combination of the random error (precision) and the systematic error (bias) components of both sampling and analytical operations. To determine accuracy, a laboratory or field value is compared to a known or true concentration. Accuracy is determined by such QC indicators as: matrix spikes, surrogate spikes, laboratory control samples (blank spikes) and performance samples.

Accuracy in the field is assessed through the use of trip blanks and equipment blanks and through the adherence to all sample handling, preservation, and holding time requirements.

The objective for trip blanks and equipment blanks is that no target compounds are present above the reporting limit.

Laboratory accuracy is assessed through the analysis of laboratory method blanks, and spiked samples such as MS/MSDs, laboratory control samples (LCSs), and surrogate compounds. Method blanks should not contain any target compounds above the reporting limits (RLs). For spiked samples, the accuracy objectives, as measured by percent recoveries (%Rs) will be the control limits generated by the laboratories that are current at the time of analyses.

Completeness

Completeness is expressed as percent of valid usable data actually obtained compared to the amount that was expected (i.e., Normal Conditions). "Normal conditions" are defined as the conditions expected if the sampling plan was implemented as planned.

Field completeness is a measure of the number of valid samples obtained during all sampling for the project. The field completeness objective is to obtain valid samples for at least 90 percent of the total samples collected.

Laboratory completeness is a measure of the number of valid measurements obtained from all the measurements taken in the project. The laboratory completeness objective is to obtain valid measurements for greater than 95 percent of the measurements.

Sensitivity

Sensitivity of analytical data is demonstrated by laboratory RLs and Method Detection Limits (MDLs). The target RLs for the COCs to be analyzed are presented in **Table 3-1a** and **Table 3-1b**. The RLs for the actual samples may differ due to analytical dilutions, sample volume, or sample matrix.

Reporting limits were selected in part by consideration of the data quality levels (DQLs) to be achieved and in part by consideration of the actual ability of the laboratory to attain reporting limits at the DQLs. Not all risk based target analyte DQLs are obtainable using the RLs of conventional EPA methods.

To maximize the usability of the data, any analytes detected below the RL and above the method detection limit will be reported by the laboratory as estimated ("J") values.

Comparability

Comparability expresses the confidence with which one data set can be compared to another. Comparability is dependent upon the proper design of the sampling program and will be satisfied by ensuring that the protocols described in this SAP are followed and that proper sampling techniques are used. Planned analytical data will be comparable when similar sampling and analytical methods are used as documented in the SAP/QAPP.

Representativeness

Representativeness is the expression of the degree to which data accurately and precisely

represent a characteristic of an environmental condition or a population. It relates both to the area of interest and to the method of taking the individual sample.

Representativeness is ensured through the design of the sampling program and will be satisfied by ensuring that the CMI, SAP and QAPP are followed and that proper sampling techniques are used. Within the laboratory, representativeness will be ensured by the use of appropriate methods, conformance to the approved analytical procedures, and adherence to sample holding times.

3.4 Data Review and Validation

Both data review and validation will be performed by multiple parties starting from the field notation and chain of custody of samples to the laboratory data output. The Construction Management Field Staff/Team Leader will have overall responsibility for checking that field notations are complete and accurate at the end of each work day. Completed field notes will be scanned and added to the network file repository. Laboratory analytical results are to involve a USEPA Region 1 Tier I Plus review process by the Laboratory QAO and the Construction Management QAO. The Tier I Plus review has two parts:

- Part I: Tier 1 Data Review provides basic information about the completeness of the data package and qualifies sample results based on reported laboratory quality control results, including laboratory contamination. For Contract Laboratory Program (CLP) data, Tier 1 is performed electronically. Review procedures shall follow those stipulated in the *EPA NE Environmental Data Review Supplement*, Chapter 2 (USEPA, 2013).
- Part II: Tier 1 Plus includes the qualification of sample results based on field duplicate sample precision data; and equipment, trip or bottle blank contamination, % solids, organic MS/MSD or pesticide and Aroclor Sulfur clean-up. Specific review procedures and qualification shall follow *USEPA Contract Laboratory Program National Functional Guidelines (NFG) for Superfund Organic Methods Data Review*, June 2008, OSWER 9240.1-48, USEPA-540-R-08-01 (12).

When the NFG qualification procedures specify professional judgment, the reviewer must manually evaluate the data to determine whether to accept, estimate (J, UJ) or reject (R) sample results.

Lab specific QA protocols are also attached in Appendix C of the QAPP and will be adhered to during the data review and validation process.

Both electronic and manual review processes by the Laboratory QAO must include a "one page" Data Review Report with attachments. The "One Page" Data Review Report documents only one group of samples in each report. The "one page" Data Review Report is formatted as a letter addressed and sent to the end user. The report contents are described below:

- The subject heading must include: the contractor Work Assignment (WA) or Task Order (TO) number, the case number and Sample Delivery Group (SDG) number, the laboratory name and location, the site name and location, the associated Regional Tier level of Review, the parameters evaluated, the total number of samples per matrix per

parameter (parenthetically identify the field duplicates), the sample matrix and field sample numbers analyzed for each parameter, the parameter, matrix and sample number for each type of blank, and the parameter, matrix, and sample number.

- The first paragraph must include the name of the Field Sampling Contractor (FSC), the reference information for the data review procedures, the title of the QAPP and/or SAP, or other project planning document, and the associated analytical method(s) and/or laboratory SOP(s).
- The second paragraph must list the QC parameters (checks) that were evaluated through review. QC parameters that met criteria should be asterisked (*) in the left-hand margin of the parameter name. Similarly, QC parameters that were not applicable to the analytical methods should be noted with N/A (not applicable) in the left-hand margin of the parameter name.
- Following the list of QC parameters, the reviewer should indicate whether or not: 1) electronic data review reports were reviewed with notations for review findings documented, 2) data review worksheets/checklists were generated for a manual review of the data, or 3) a combination of electronic reports and worksheets/checklists were used depending on the project objectives which may result in automated and manual data review procedures.
- The next paragraph includes:
    - The first element in this section is a list of the DQOs from the QAPP, SAP or other project planning document.
    - Include a statement indicating the overall quality of the data. Include statements such as "Data review indicated minor data quality problems" or "Data review indicated major data quality problems".
    - This introductory statement is then followed by a brief description of the elements which establish the basis for the statement. Expected statements include: "All iron results were qualified due to method blank contamination" or "Acetone results were qualified due to an inaccurate calibration". Items included in this paragraph identify and summarize qualification on the Data Summary Tables which impact usability. This explanation provides an overview of data usability which combines analyte-specific statements and usability assessment. The descriptions should be listed by analytical parameter (i.e., Trace Volatiles, Semi volatiles, etc.; or ICP-AES, Mercury, etc.). Rejected results or technical decisions based on professional judgment to reject results should be included here.
    - The last sentence in the paragraph must indicate whether or not the results are usable for the site objectives. If the data are not usable, include the rationale and notify the end user immediately.

Attachments to the data review report include:

- Data Summary Tables (Data Spreadsheets) - Data Summary Tables (typically in spreadsheet format) include the results and qualifiers for the field samples. Sample results are displayed side by side which facilitates review by the end user. Qualifier footnotes must be provided for significant and multiple qualifiers which impact data usability. The qualifier footnotes must clearly identify the reason for qualification.

- Data Review Documentation - The rationale for qualifying data must be documented in attachments to the Data Review Report. Data review must demonstrate that sample results have been assessed against evaluation parameters specific to the analytical method. Reviewers must ensure that method and review criteria are current, accurate and documented. Depending on the data review procedures, a combination of electronic reports, worksheets, checklists or alternate recording format may be provided as applicable.
- Support Documentation - Support documentation includes records of communication between the data reviewer and the lab or the reviewer and the sampler (email messages and/or telephone logs), field notes, etc.

BASF will have final review and approval of the data prior to issuance to any agencies.

3.5 Data Management

Data management operations include data recording, validation, transformation, transmittal, reduction, analysis, tracking, storage and retrieval. Upon receipt from the laboratory, hard copy data and EDDs will be checked for completeness. During the data analysis process, a variety of quality checks are performed to ensure data integrity. These checks include:

- Audits to ensure that laboratories reported all requested analyses;
- Checks that all analytes are consistently and correctly identified;
- Reviews to ensure that units of measurement are provided and are consistent;
- Reports to review sample definitions (depths, dates, locations); and
- Proofing manually entered data against the hard-copy original.
- Records of the checks are maintained on file.

Once all data quality checks are performed, the data will be exported to a variety of formats to meet project needs. Cross-tab tables showing concentrations by sample location will be prepared.

The project data will be maintained on a secure network drive, which is backed up regularly. Access to the data will be limited to authorized users and will be controlled by password access.

The project files will be the central repository for all documents which constitute evidence relevant to sampling and analysis activities as described in this QAPP. AEI is the custodian of the project files and will maintain the contents of the project files for the investigation, including all relevant records, reports, logs, field notebooks, pictures, subcontractor reports, and data reviews in a secured, limited access area and under custody of the AEI Project Manager. Ultimately, this information will be transmitted electronically to BASF for permanent storage.

The project files will include at a minimum:

- Field logbooks,
- Field data and data deliverables,
- Photographs,

- Drawings,
- Sample collection logs,
- Laboratory data deliverables,
- Data validation reports,
- Data assessment reports,
- Access/Legal agreements with property owners,
- A copy of final plans and other documents,
- Progress reports, QA reports, interim project reports, etc.,
- All custody documentation (tags, forms, airbills, etc.)

Records will be retained for a minimum of 6 years or the duration requested by USEPA.

3.6 Assessment Oversight

The types of planned assessments pertinent to this program include technical surveillance audits (TSAs) of field and laboratory activities, data package audits, and data validation audits.

Field Activity TSA

If requested by the AEI Project Manager, a TSA of field activities may be conducted by the AEI Project QA Officer or his/her designate. The TSA includes an examination of field sampling records, field measurement results, field instrument operating and calibration records, sample collection, handling, and packaging procedures, QA procedures, chain-of-custody, sample documentation, etc. If significant deficiencies are noted, follow-up audits will be conducted.

During the audit, the auditor will keep detailed notes of audit findings. Preliminary results of the audit will be reviewed with the AEI Field Team Leader while on site to ensure that deficiencies adversely affecting data quality are immediately identified and corrective measures initiated. Upon completion of the audit, the AEI Project QA Officer will prepare a written audit report, which summarizes the audit findings, identifies deficiencies and recommends corrective actions. This report will be submitted to the AEI Project Manager, who will be responsible for ensuring that corrective measures are implemented and documented, as discussed below. The results of the audit process will be included in the QA reports to management, as described below.

Laboratory TSA

Laboratory TSAs are conducted periodically by BASF or AEI's QA staff as part of their analytical subcontractor monitoring program. The laboratory TSA includes a review of the following areas:

- QA organization and procedures,
- Personnel training and qualifications,
- Sample log-in procedures,
- Sample storage facilities,
- Analyst technique,
- Adherence to laboratory SOPs and project QAPP,
- Compliance with QA/QC objectives,

- Instrument calibration and maintenance,
- Data recording, reduction, review, and reporting, and
- Cleanliness and housekeeping.

Preliminary results of the systems audit will be discussed with the Laboratory Manager, Laboratory Project Manager, and Laboratory QA Coordinator. A written report that summarizes audit findings and recommends corrective actions will be prepared and submitted to the Laboratory Manager for response, and to the AEI Project Manager. The results of the audit, including resolution of any deficiencies, will be included in the QA reports to management, as described below.

Response Actions

Corrective action is the process of identifying, recommending, approving, and implementing measures to counter unacceptable procedures or out-of-limit QC performance that can affect data quality. Corrective action can occur during field activities, laboratory analyses, and data assessment. All corrective action proposed and implemented should be documented in the QA reports to management, see below. Corrective action should only be implemented after approval by the AEI Project Manager, or his designate.

The USEPA Project Manager will be notified of significant issues that potentially impact the achievement of the project objectives.

Field Corrective Action

Corrective action in the field may be needed when the sample network is changed (i.e., more/less samples, sampling locations other than those specified in the QAPP, etc.), or when sampling procedures and/or field analytical procedures require modification, etc. due to unexpected conditions. The field team may identify the need for corrective action. The AEI Field Team Leader will approve the corrective action and notify the AEI Project Manager. The AEI Project Manager, in consultation with the AEI Project QA Officer, will approve the corrective measure. The AEI Field Team Leader will ensure that the corrective measure is implemented by the field team.

Corrective action resulting from internal field audits will be implemented immediately if data may be adversely affected due to unapproved or improper use of approved methods. The AEI Project QA Officer will identify deficiencies and recommend corrective action to the AEI Project Manager. Implementation of corrective actions will be performed by the AEI Field Team Leader and field team. Corrective action will be documented in QA reports to the project management team (see below).

Corrective actions will be implemented and documented in the field record book. Documentation will include:

- A description of the circumstances that initiated the corrective action,
- The action taken in response,
- The final resolution, and
- Any necessary approvals.

No staff member will initiate corrective action without prior communication of findings through the AEI Project Manager and Field Team Leader.

Laboratory Corrective Action

Corrective action in the laboratory may occur prior to, during, and after initial analyses. A number of conditions such as broken sample containers, multiple phases, low/high pH readings, and potentially high concentration samples may be identified during sample log-in or analysis. Following consultation with laboratory analysts and supervisory personnel, it may be necessary for the Laboratory QA Coordinator to approve the implementation of corrective action. If the nonconformance causes project objectives not to be achieved, the AEI Project Manager will be notified.

These corrective actions are performed prior to release of the data from the laboratory. The corrective action will be documented in both the laboratory's corrective action files, and in the narrative data report sent from the laboratory to the AEI Project Manager. If the corrective action does not rectify the situation, the laboratory will contact the AEI Project Manager, who will determine the action to be taken and inform the appropriate personnel.

Corrective Action During Data Review and Data Assessment

The need for corrective action may be identified during either data review or data assessment. Potential types of corrective action may include resampling by the field team or reinjection/reanalysis of samples by the laboratory. These actions are dependent upon the ability to mobilize the field team and whether the data to be collected is necessary to meet the required QA objectives. If the AEI data reviewer or data assessor identifies a corrective action situation, the AEI Project Manager will be responsible for informing the appropriate personnel.

Reports to Management

QA reports will be submitted to the AEI Project Manager to ensure that any problems identified during the sampling and analysis programs are investigated and the proper corrective measures taken in response. The QA reports will include (where applicable):

- All results of field and laboratory audits,
- A summary of revisions to the QAPP,
- Results of any performance evaluation (PE) or split samples,
- Problems noted during data validation and assessment, and
- Significant QA/QC problems, recommended corrective actions, and the outcome of corrective actions.

QA reports will be prepared by the AEI Project QA Officer and submitted on an as-needed basis.

Table 3-1a: Soil COC Laboratory Reporting Limits and Laboratory/Dexsil Screening Project Action Levels

Analytical Parameter (Contaminants of Concern)	Laboratory Reporting or Quantitation Limits (mg/kg)	Project Action Levels (mg/kg)
PCBs – Aroclors	0.05	25
Toluene	0.005	54
Chlorobenzene	0.005	100
2-Chlorotoluene	NA	NA
1,2-Dichlorobenzene	NA	NA
Xylenes (Total)	NA	NA

Table 3-1b: Groundwater COC Laboratory Reporting Limits and Project Action Levels

Analytical Parameter (Contaminants of Concern)	Laboratory Reporting or Quantitation Limits (ug/L)	Project Action Levels (ug/L)
PCBs – Aroclors	0.22	0.5
Toluene	0.020	1,700
Chlorobenzene	0.020	1,700
2-Chlorotoluene	0.020	1,500
1,2-Dichlorobenzene	0.020	94
Xylenes (Total)	0.060	78

4.0 SAMPLING RATIONALE

Sampling of soil and groundwater will be conducted at the conclusion of each remedial phase, except for soil capping, to verify compliance with the cleanup standards in **Tables 3-1a** and **3-1b**. At this time, the groundwater remedy is in the design phase and an Initial Production Task (IPT) will be completed prior to the completion of the full design. This SAP includes the groundwater progress monitoring sampling proposed for the IPT.

4.1 Soil Sampling

Soil removal and disposal (R&D) will occur prior to soil sampling. Soil sample collection will be conducted by AEI field staff. Soil sample results will be used to show compliance with the cleanup standards. Excavation areas and proposed points of compliance are shown on **Figures 1** and **2.** Bottom and sidewall samples will be collected at the nodes of a 5-foot grid. Sidewall samples are not shown and will be determined in the field by the AEI field staff based upon final excavation area. **Table 4-1** provides information regarding the sample designation, proposed sample depths, sample/duplicate/QC rationale. Sidewall sample depths are to be determined based upon final excavation extents.

4.2 Sediment Sampling

Not applicable to this scope of work

4.3 Groundwater Sampling

An IPT will be performed as part of the groundwater treatment pilot study. Following the IPT, progress monitoring of the VOC contamination in site groundwater will be conducted by AEI. Deep and shallow groundwater will be evaluated using existing on-Site wells. The proposed compliance wells are shown on **Figure 3**. **Table 4-2** provides sample designation, sample depth, sample locations/duplicate information.

4.4 Other Sampling

Samples for disposal characterization purposes may need to be collected during the course of work. Frequency of sampling will be specified by the selected disposal facility, but for this project it is anticipated the required sample frequency will be one (1) sample for every 500 tons of material. When collecting soil samples for disposal purposes, the disposal parameters for approval shall be used as the analytical requirements. These analyses may include: VOCs, PCBs, SVOCs, TPH, RCRA 8 Metals, Reactivity, Ignitability, Paint Filter, and Total Cyanide and Sulfur.

Table 4-1: Soil Sampling Design and Rationale

Sampling Location/ID Number	Depth (ft)	Analytical Parameter	Rationale
Bottom Samples			
B-1	1	PCBs (9078)	Post excavation verification of compliance with 25 mg/kg PCB cleanup standard. Sample location in accordance with TSCA.
B-2	1	PCBs (9078)	Post excavation verification of compliance with 25 mg/kg PCB cleanup standard. Sample location in accordance with TSCA.
B-3	1	PCBs (9078)	Post excavation verification of compliance with 25 mg/kg PCB cleanup standard. Sample location in accordance with TSCA.
B-4	1	PCBs (9078)	Post excavation verification of compliance with 25 mg/kg PCB cleanup standard. Sample location in accordance with TSCA.
B-5	3	PCBs (9078, 8082A/3540C)	Post excavation verification of compliance with 25 mg/kg PCB cleanup standard. Sample location in accordance with TSCA.
B-6	3	PCBs (9078)	Post excavation verification of compliance with 25 mg/kg PCB cleanup standard. Sample location in accordance with TSCA.
B-7	3	PCBs (9078)	Post excavation verification of compliance with 25 mg/kg PCB cleanup standard. Sample location in accordance with TSCA.
B-8	3	PCBs (9078)	Post excavation verification of compliance with 25 mg/kg PCB cleanup standard. Sample location in accordance with TSCA.
B-9	3	PCBs (9078)	Post excavation verification of compliance with 25 mg/kg PCB cleanup standard. Sample location in accordance with TSCA.
B-10	3	PCBs (9078, 8082A/3540C)	Post excavation verification of compliance with 25 mg/kg PCB cleanup standard. Sample location in accordance with TSCA.
B-11	3	PCBs (9078)	Post excavation verification of compliance with 25 mg/kg PCB cleanup standard. Sample location in accordance with TSCA.
B-12	3	PCBs (9078)	Post excavation verification of compliance with 25 mg/kg PCB cleanup standard. Sample location in accordance with TSCA.
B-13	3	PCBs (9078)	Post excavation verification of compliance with 25 mg/kg PCB cleanup standard. Sample location in accordance with TSCA.
B-14	3	PCBs (9078)	Post excavation verification of compliance with 25 mg/kg PCB cleanup standard. Sample location in accordance with TSCA.
B-15	3	PCBs (9078, 8082A/3540C)	Post excavation verification of compliance with 25 mg/kg PCB cleanup standard. Sample location in accordance with TSCA.
B-16	3	PCBs (9078)	Post excavation verification of compliance with 25 mg/kg PCB cleanup standard. Sample location in accordance with TSCA.
B-17	3	PCBs (9078)	Post excavation verification of compliance with 25 mg/kg PCB cleanup standard. Sample location in accordance with TSCA.
B-18	3	PCBs (9078)	Post excavation verification of compliance with 25 mg/kg PCB cleanup standard. Sample location in accordance with TSCA.
B-19	3	PCBs (9078)	Post excavation verification of compliance with 25 mg/kg PCB cleanup standard. Sample location in accordance with TSCA.

Sampling Location/ID Number	Depth (ft)	Analytical Parameter	Rationale
Bottom Samples			
B-20	3	PCBs (9078, 8082A/3540C)	Post excavation verification of compliance with 25 mg/kg PCB cleanup standard. Sample location in accordance with TSCA. Field Duplicate and Equipment Blank for PCBs - 9078 collected from this location.
B-21	1	PCBs (9078)	Post excavation verification of compliance with 25 mg/kg PCB cleanup standard. Sample location in accordance with TSCA.
B-22	1	PCBs (9078)	Post excavation verification of compliance with 25 mg/kg PCB cleanup standard. Sample location in accordance with TSCA.
B-23	1	PCBs (9078)	Post excavation verification of compliance with 25 mg/kg PCB cleanup standard. Sample location in accordance with TSCA.
B-24	1	PCBs (9078)	Post excavation verification of compliance with 25 mg/kg PCB cleanup standard. Sample location in accordance with TSCA.
B-25	1	PCBs (9078, 8082A/3540C)	Post excavation verification of compliance with 25 mg/kg PCB cleanup standard. Sample location in accordance with TSCA.
B-26	1	PCBs (9078)	Post excavation verification of compliance with 25 mg/kg PCB cleanup standard. Sample location in accordance with TSCA.
B-27	1	PCBs (9078)	Post excavation verification of compliance with 25 mg/kg PCB cleanup standard. Sample location in accordance with TSCA.
B-28	1	PCBs (9078)	Post excavation verification of compliance with 25 mg/kg PCB cleanup standard. Sample location in accordance with TSCA.
B-29	1	PCBs (9078)	Post excavation verification of compliance with 25 mg/kg PCB cleanup standard. Sample location in accordance with TSCA.
B-30	1	PCBs (9078, 8082A/3540C)	Post excavation verification of compliance with 25 mg/kg PCB cleanup standard. Sample location in accordance with TSCA.
B-31	1	PCBs (9078)	Post excavation verification of compliance with 25 mg/kg PCB cleanup standard. Sample location in accordance with TSCA.
B-32	1	PCBs (9078)	Post excavation verification of compliance with 25 mg/kg PCB cleanup standard. Sample location in accordance with TSCA.
B-33	1	PCBs (9078)	Post excavation verification of compliance with 25 mg/kg PCB cleanup standard. Sample location in accordance with TSCA.
B-34	1	PCBs (9078)	Post excavation verification of compliance with 25 mg/kg PCB cleanup standard. Sample location in accordance with TSCA.
B-35	1	PCBs (9078, 8082A/3540C)	Post excavation verification of compliance with 25 mg/kg PCB cleanup standard. Sample location in accordance with TSCA.
B-36	1	PCBs (9078)	Post excavation verification of compliance with 25 mg/kg PCB cleanup standard. Sample location in accordance with TSCA.
B-37	1	PCBs (9078)	Post excavation verification of compliance with 25 mg/kg PCB cleanup standard. Sample location in accordance with TSCA.
B-38	1	PCBs (9078)	Post excavation verification of compliance with 25 mg/kg PCB cleanup standard. Sample location in accordance with TSCA.
B-39	1	PCBs (9078)	Post excavation verification of compliance with 25 mg/kg PCB cleanup standard. Sample location in accordance with TSCA.

Sampling Location/ID Number	Depth (ft)	Analytical Parameter	Rationale
Bottom Samples			
B-40	1	PCBs (9078, 8082A/3540C)	Post excavation verification of compliance with 25 mg/kg PCB cleanup standard. Sample location in accordance with TSCA. Field Duplicate and Equipment Blank for PCBs - 9078 collected from this location.
B-41	4	PCBs (9078)	Post excavation verification of compliance with 25 mg/kg PCB cleanup standard. Sample location in accordance with TSCA.
B-42	4	PCBs (9078)	Post excavation verification of compliance with 25 mg/kg PCB cleanup standard. Sample location in accordance with TSCA.
B-43	4	PCBs (9078)	Post excavation verification of compliance with 25 mg/kg PCB cleanup standard. Sample location in accordance with TSCA.
B-44	4	PCBs (9078)	Post excavation verification of compliance with 25 mg/kg PCB cleanup standard. Sample location in accordance with TSCA.
B-45	4	PCBs (9078, 8082A/3540C)	Post excavation verification of compliance with 25 mg/kg PCB cleanup standard. Sample location in accordance with TSCA.
B-46	4	PCBs (9078)	Post excavation verification of compliance with 25 mg/kg PCB cleanup standard. Sample location in accordance with TSCA.
B-47	4	PCBs (9078)	Post excavation verification of compliance with 25 mg/kg PCB cleanup standard. Sample location in accordance with TSCA.
B-48	4	PCBs (9078)	Post excavation verification of compliance with 25 mg/kg PCB cleanup standard. Sample location in accordance with TSCA.
B-49	2	PCBs (9078)	Post excavation verification of compliance with 25 mg/kg PCB cleanup standard. Sample location in accordance with TSCA.
B-50	2	PCBs (9078, 8082A/3540C)	Post excavation verification of compliance with 25 mg/kg PCB cleanup standard. Sample location in accordance with TSCA.
B-51	2	PCBs (9078)	Post excavation verification of compliance with 25 mg/kg PCB cleanup standard. Sample location in accordance with TSCA.
B-52	2	PCBs (9078)	Post excavation verification of compliance with 25 mg/kg PCB cleanup standard. Sample location in accordance with TSCA.
B-53	2	PCBs (9078)	Post excavation verification of compliance with 25 mg/kg PCB cleanup standard. Sample location in accordance with TSCA.
B-54	2	PCBs (9078)	Post excavation verification of compliance with 25 mg/kg PCB cleanup standard. Sample location in accordance with TSCA.
B-55	2	PCBs (9078, 8082A/3540C)	Post excavation verification of compliance with 25 mg/kg PCB cleanup standard. Sample location in accordance with TSCA.
B-56	2	PCBs (9078)	Post excavation verification of compliance with 25 mg/kg PCB cleanup standard. Sample location in accordance with TSCA.
B-57	2	PCBs (9078)	Post excavation verification of compliance with 25 mg/kg PCB cleanup standard. Sample location in accordance with TSCA.
B-58	2	PCBs (9078)	Post excavation verification of compliance with 25 mg/kg PCB cleanup standard. Sample location in accordance with TSCA.
B-59	2	PCBs (9078)	Post excavation verification of compliance with 25 mg/kg PCB cleanup standard. Sample location in accordance with TSCA.

Sampling Location/ID Number	Depth (ft)	Analytical Parameter	Rationale
Bottom Samples			
B-60	2	PCBs (9078, 8082A/3540C)	Post excavation verification of compliance with 25 mg/kg PCB cleanup standard. Sample location in accordance with TSCA. Field Duplicate and Equipment Blank for PCBs - 9078 collected from this location.
B-61	2	PCBs (9078)	Post excavation verification of compliance with 25 mg/kg PCB cleanup standard. Sample location in accordance with TSCA.
B-62	2	PCBs (9078)	Post excavation verification of compliance with 25 mg/kg PCB cleanup standard. Sample location in accordance with TSCA.
B-63	2	PCBs (9078)	Post excavation verification of compliance with 25 mg/kg PCB cleanup standard. Sample location in accordance with TSCA.
B-64	2	PCBs (9078)	Post excavation verification of compliance with 25 mg/kg PCB cleanup standard. Sample location in accordance with TSCA.
B-65	1	PCBs (9078, 8082A/3540C)	Post excavation verification of compliance with 25 mg/kg PCB cleanup standard. Sample location in accordance with TSCA.
B-66	1	PCBs (9078)	Post excavation verification of compliance with 25 mg/kg PCB cleanup standard. Sample location in accordance with TSCA.
B-67	1	PCBs (9078)	Post excavation verification of compliance with 25 mg/kg PCB cleanup standard. Sample location in accordance with TSCA.
B-68	1	PCBs (9078)	Post excavation verification of compliance with 25 mg/kg PCB cleanup standard. Sample location in accordance with TSCA.
B-69	3	PCBs (9078)	Post excavation verification of compliance with 25 mg/kg PCB cleanup standard. Sample location in accordance with TSCA.
B-70	3	PCBs (9078, 8082A/3540C)	Post excavation verification of compliance with 25 mg/kg PCB cleanup standard. Sample location in accordance with TSCA.
B-71	3	PCBs (9078)	Post excavation verification of compliance with 25 mg/kg PCB cleanup standard. Sample location in accordance with TSCA.
B-72	3	PCBs (9078)	Post excavation verification of compliance with 25 mg/kg PCB cleanup standard. Sample location in accordance with TSCA.
B-73	3	PCBs (9078)	Post excavation verification of compliance with 25 mg/kg PCB cleanup standard. Sample location in accordance with TSCA.
B-74	3	PCBs (9078)	Post excavation verification of compliance with 25 mg/kg PCB cleanup standard. Sample location in accordance with TSCA.
B-75	3	PCBs (9078, 8082A/3540C)	Post excavation verification of compliance with 25 mg/kg PCB cleanup standard. Sample location in accordance with TSCA.
B-76	3	PCBs (9078)	Post excavation verification of compliance with 25 mg/kg PCB cleanup standard. Sample location in accordance with TSCA.
B-77	6	PCBs (9078)	Post excavation verification of compliance with 25 mg/kg PCB cleanup standard. Sample location in accordance with TSCA.
B-78	6	PCBs (9078)	Post excavation verification of compliance with 25 mg/kg PCB cleanup standard. Sample location in accordance with TSCA.
B-79	6	PCBs (9078)	Post excavation verification of compliance with 25 mg/kg PCB cleanup standard. Sample location in accordance with TSCA.

Sampling Location/ID Number	Depth (ft)	Analytical Parameter	Rationale
Bottom Samples			
B-80	6	PCBs (9078, 8082A/3540C)	Post excavation verification of compliance with 25 mg/kg PCB cleanup standard. Sample location in accordance with TSCA. Field Duplicate and Equipment Blank for PCBs - 9078 collected from this location.
B-81	6	PCBs (9078)	Post excavation verification of compliance with 25 mg/kg PCB cleanup standard. Sample location in accordance with TSCA.
B-82	6	PCBs (9078)	Post excavation verification of compliance with 25 mg/kg PCB cleanup standard. Sample location in accordance with TSCA.
B-83	6	PCBs (9078)	Post excavation verification of compliance with 25 mg/kg PCB cleanup standard. Sample location in accordance with TSCA.
B-84	6	PCBs (9078)	Post excavation verification of compliance with 25 mg/kg PCB cleanup standard. Sample location in accordance with TSCA.
B-85	6	PCBs (9078, 8082A/3540C)	Post excavation verification of compliance with 25 mg/kg PCB cleanup standard. Sample location in accordance with TSCA.
B-86	6	PCBs (9078)	Post excavation verification of compliance with 25 mg/kg PCB cleanup standard. Sample location in accordance with TSCA.
B-87	6	PCBs (9078)	Post excavation verification of compliance with 25 mg/kg PCB cleanup standard. Sample location in accordance with TSCA.
B-88	6	PCBs (9078)	Post excavation verification of compliance with 25 mg/kg PCB cleanup standard. Sample location in accordance with TSCA.
B-89	6	PCBs (9078)	Post excavation verification of compliance with 25 mg/kg PCB cleanup standard. Sample location in accordance with TSCA.
B-90	6	PCBs (9078, 8082A/3540C)	Post excavation verification of compliance with 25 mg/kg PCB cleanup standard. Sample location in accordance with TSCA.
B-91	6	PCBs (9078)	Post excavation verification of compliance with 25 mg/kg PCB cleanup standard. Sample location in accordance with TSCA.
B-92	6	PCBs (9078)	Post excavation verification of compliance with 25 mg/kg PCB cleanup standard. Sample location in accordance with TSCA.
B-93	6	PCBs (9078)	Post excavation verification of compliance with 25 mg/kg PCB cleanup standard. Sample location in accordance with TSCA.
B-94	6	PCBs (9078)	Post excavation verification of compliance with 25 mg/kg PCB cleanup standard. Sample location in accordance with TSCA.
B-95	6	PCBs (9078, 8082A/3540C)	Post excavation verification of compliance with 25 mg/kg PCB cleanup standard. Sample location in accordance with TSCA.
B-96	6	PCBs (9078)	Post excavation verification of compliance with 25 mg/kg PCB cleanup standard. Sample location in accordance with TSCA.
B-97	2	PCBs (9078)	Post excavation verification of compliance with 25 mg/kg PCB cleanup standard. Sample location in accordance with TSCA.
B-98	2	PCBs (9078)	Post excavation verification of compliance with 25 mg/kg PCB cleanup standard. Sample location in accordance with TSCA.
B-99	2	PCBs (9078)	Post excavation verification of compliance with 25 mg/kg PCB cleanup standard. Sample location in accordance with TSCA.

Sampling Location/ID Number	Depth (ft)	Analytical Parameter	Rationale
Bottom Samples			
B-100	2	PCBs (9078, 8082A/3540C)	Post excavation verification of compliance with 25 mg/kg PCB cleanup standard. Sample location in accordance with TSCA. Field Duplicate for PCBs - 9078 & 8082A/3540C, MS/MSD for PCBs - 8082A/3540C and Equipment Blank - 9078 & 8082A/3540C collected from this location.
B-101	2	PCBs (9078)	Post excavation verification of compliance with 25 mg/kg PCB cleanup standard. Sample location in accordance with TSCA.
B-102	2	PCBs (9078)	Post excavation verification of compliance with 25 mg/kg PCB cleanup standard. Sample location in accordance with TSCA.
B-103	2	PCBs (9078)	Post excavation verification of compliance with 25 mg/kg PCB cleanup standard. Sample location in accordance with TSCA.
B-104	2	PCBs (9078)	Post excavation verification of compliance with 25 mg/kg PCB cleanup standard. Sample location in accordance with TSCA.
B-105	2	PCBs (9078, 8082A/3540C)	Post excavation verification of compliance with 25 mg/kg PCB cleanup standard. Sample location in accordance with TSCA.
B-106	2	PCBs (9078)	Post excavation verification of compliance with 25 mg/kg PCB cleanup standard. Sample location in accordance with TSCA.
B-107	2	PCBs (9078)	Post excavation verification of compliance with 25 mg/kg PCB cleanup standard. Sample location in accordance with TSCA.
B-108	2	PCBs (9078)	Post excavation verification of compliance with 25 mg/kg PCB cleanup standard. Sample location in accordance with TSCA.
B-109	2	PCBs (9078)	Post excavation verification of compliance with 25 mg/kg PCB cleanup standard. Sample location in accordance with TSCA.
B-110	2	PCBs (9078, 8082A/3540C)	Post excavation verification of compliance with 25 mg/kg PCB cleanup standard. Sample location in accordance with TSCA.
B-111	2	PCBs (9078)	Post excavation verification of compliance with 25 mg/kg PCB cleanup standard. Sample location in accordance with TSCA.
B-112	2	PCBs (9078)	Post excavation verification of compliance with 25 mg/kg PCB cleanup standard. Sample location in accordance with TSCA.
B-113	3	PCBs (9078)	Post excavation verification of compliance with 25 mg/kg PCB cleanup standard. Sample location in accordance with TSCA.
B-114	3	PCBs (9078)	Post excavation verification of compliance with 25 mg/kg PCB cleanup standard. Sample location in accordance with TSCA.
B-115	3	PCBs (9078, 8082A/3540C)	Post excavation verification of compliance with 25 mg/kg PCB cleanup standard. Sample location in accordance with TSCA.
B-116	3	PCBs (9078)	Post excavation verification of compliance with 25 mg/kg PCB cleanup standard. Sample location in accordance with TSCA.
B-117	3	PCBs (9078)	Post excavation verification of compliance with 25 mg/kg PCB cleanup standard. Sample location in accordance with TSCA.
B-118	3	PCBs (9078)	Post excavation verification of compliance with 25 mg/kg PCB cleanup standard. Sample location in accordance with TSCA.

Sampling Location/ID Number	Depth (ft)	Analytical Parameter	Rationale
Bottom Samples			
B-119	3	PCBs (9078)	Post excavation verification of compliance with 25 mg/kg PCB cleanup standard. Sample location in accordance with TSCA.
B-120	3	PCBs (9078, 8082A/3540C)	Post excavation verification of compliance with 25 mg/kg PCB cleanup standard. Sample location in accordance with TSCA. Field Duplicate and Equipment Blank for PCBs - 9078 collected from this location.
B-121	3	PCBs (9078)	Post excavation verification of compliance with 25 mg/kg PCB cleanup standard. Sample location in accordance with TSCA.
B-122	3	PCBs (9078)	Post excavation verification of compliance with 25 mg/kg PCB cleanup standard. Sample location in accordance with TSCA.
B-123	3	PCBs (9078)	Post excavation verification of compliance with 25 mg/kg PCB cleanup standard. Sample location in accordance with TSCA.
B-124	3	PCBs (9078)	Post excavation verification of compliance with 25 mg/kg PCB cleanup standard. Sample location in accordance with TSCA.
B-125	3	PCBs (9078, 8082A/3540C)	Post excavation verification of compliance with 25 mg/kg PCB cleanup standard. Sample location in accordance with TSCA.
B-126	3	PCBs (9078)	Post excavation verification of compliance with 25 mg/kg PCB cleanup standard. Sample location in accordance with TSCA.
B-127	3	PCBs (9078)	Post excavation verification of compliance with 25 mg/kg PCB cleanup standard. Sample location in accordance with TSCA.
B-128	3	PCBs (9078)	Post excavation verification of compliance with 25 mg/kg PCB cleanup standard. Sample location in accordance with TSCA.
B-129	3	PCBs (9078)	Post excavation verification of compliance with 25 mg/kg PCB cleanup standard. Sample location in accordance with TSCA.
B-130	3	PCBs (9078, 8082A/3540C)	Post excavation verification of compliance with 25 mg/kg PCB cleanup standard. Sample location in accordance with TSCA.
B-131	3	PCBs (9078)	Post excavation verification of compliance with 25 mg/kg PCB cleanup standard. Sample location in accordance with TSCA.
B-132	3	PCBs (9078)	Post excavation verification of compliance with 25 mg/kg PCB cleanup standard. Sample location in accordance with TSCA.
B-133	3	PCBs (9078)	Post excavation verification of compliance with 25 mg/kg PCB cleanup standard. Sample location in accordance with TSCA.
B-134	3	PCBs (9078)	Post excavation verification of compliance with 25 mg/kg PCB cleanup standard. Sample location in accordance with TSCA.
B-135	3	PCBs (9078, 8082A/3540C)	Post excavation verification of compliance with 25 mg/kg PCB cleanup standard. Sample location in accordance with TSCA.
B-136	3	PCBs (9078)	Post excavation verification of compliance with 25 mg/kg PCB cleanup standard. Sample location in accordance with TSCA.
B-137	3	PCBs (9078)	Post excavation verification of compliance with 25 mg/kg PCB cleanup standard. Sample location in accordance with TSCA.
B-138	3	PCBs (9078)	Post excavation verification of compliance with 25 mg/kg PCB cleanup standard. Sample location in accordance with TSCA.

Sampling Location/ID Number	Depth (ft)	Analytical Parameter	Rationale
Bottom Samples			
B-139	3	PCBs (9078)	Post excavation verification of compliance with 25 mg/kg PCB cleanup standard. Sample location in accordance with TSCA.
B-140	3	PCBs (9078, 8082A/3540C)	Post excavation verification of compliance with 25 mg/kg PCB cleanup standard. Sample location in accordance with TSCA. Field Duplicate and Equipment Blank for PCBs - 9078 collected from this location.
B-141	3	PCBs (9078)	Post excavation verification of compliance with 25 mg/kg PCB cleanup standard. Sample location in accordance with TSCA.
B-142	3	PCBs (9078)	Post excavation verification of compliance with 25 mg/kg PCB cleanup standard. Sample location in accordance with TSCA.
B-143	3	PCBs (9078)	Post excavation verification of compliance with 25 mg/kg PCB cleanup standard. Sample location in accordance with TSCA.
B-144	3	PCBs (9078)	Post excavation verification of compliance with 25 mg/kg PCB cleanup standard. Sample location in accordance with TSCA.
B-145	7	PCBs (9078, 8082A/3540C)	Post excavation verification of compliance with 25 mg/kg PCB cleanup standard. Sample location in accordance with TSCA.
B-146	7	PCBs (9078)	Post excavation verification of compliance with 25 mg/kg PCB cleanup standard. Sample location in accordance with TSCA.
B-147	7	PCBs (9078)	Post excavation verification of compliance with 25 mg/kg PCB cleanup standard. Sample location in accordance with TSCA.
B-148	7	PCBs (9078)	Post excavation verification of compliance with 25 mg/kg PCB cleanup standard. Sample location in accordance with TSCA.
B-149	7	PCBs (9078)	Post excavation verification of compliance with 25 mg/kg PCB cleanup standard. Sample location in accordance with TSCA.
B-150	7	PCBs (9078, 8082A/3540C)	Post excavation verification of compliance with 25 mg/kg PCB cleanup standard. Sample location in accordance with TSCA.
B-151	7	PCBs (9078)	Post excavation verification of compliance with 25 mg/kg PCB cleanup standard. Sample location in accordance with TSCA.
B-152	7	PCBs (9078)	Post excavation verification of compliance with 25 mg/kg PCB cleanup standard. Sample location in accordance with TSCA.
B-153	7	PCBs (9078)	Post excavation verification of compliance with 25 mg/kg PCB cleanup standard. Sample location in accordance with TSCA.
B-154	7	PCBs (9078)	Post excavation verification of compliance with 25 mg/kg PCB cleanup standard. Sample location in accordance with TSCA.
B-155	7	PCBs (9078, 8082A/3540C)	Post excavation verification of compliance with 25 mg/kg PCB cleanup standard. Sample location in accordance with TSCA.
B-156	7	PCBs (9078)	Post excavation verification of compliance with 25 mg/kg PCB cleanup standard. Sample location in accordance with TSCA.
B-157	7	PCBs (9078)	Post excavation verification of compliance with 25 mg/kg PCB cleanup standard. Sample location in accordance with TSCA.
B-158	7	PCBs (9078)	Post excavation verification of compliance with 25 mg/kg PCB cleanup standard. Sample location in accordance with TSCA.

Sampling Location/ID Number	Depth (ft)	Analytical Parameter	Rationale
Bottom Samples			
B-159	7	PCBs (9078)	Post excavation verification of compliance with 25 mg/kg PCB cleanup standard. Sample location in accordance with TSCA.
B-160	7	PCBs (9078, 8082A/3540C)	Post excavation verification of compliance with 25 mg/kg PCB cleanup standard. Sample location in accordance with TSCA. Field Duplicate and Equipment Blank for PCBs - 9078 collected from this location.
B-161	2	PCBs (9078)	Post excavation verification of compliance with 25 mg/kg PCB cleanup standard. Sample location in accordance with TSCA.
B-162	2	PCBs (9078)	Post excavation verification of compliance with 25 mg/kg PCB cleanup standard. Sample location in accordance with TSCA.
B-163	2	PCBs (9078)	Post excavation verification of compliance with 25 mg/kg PCB cleanup standard. Sample location in accordance with TSCA.
B-164	2	PCBs (9078)	Post excavation verification of compliance with 25 mg/kg PCB cleanup standard. Sample location in accordance with TSCA.
B-165	2	PCBs (9078, 8082A/3540C)	Post excavation verification of compliance with 25 mg/kg PCB cleanup standard. Sample location in accordance with TSCA.
B-166	2	PCBs (9078)	Post excavation verification of compliance with 25 mg/kg PCB cleanup standard. Sample location in accordance with TSCA.
B-167	2	PCBs (9078)	Post excavation verification of compliance with 25 mg/kg PCB cleanup standard. Sample location in accordance with TSCA.
B-168	2	PCBs (9078)	Post excavation verification of compliance with 25 mg/kg PCB cleanup standard. Sample location in accordance with TSCA.
B-169	2	PCBs (9078)	Post excavation verification of compliance with 25 mg/kg PCB cleanup standard. Sample location in accordance with TSCA.
B-170	2	PCBs (9078, 8082A/3540C)	Post excavation verification of compliance with 25 mg/kg PCB cleanup standard. Sample location in accordance with TSCA.
B-171	2	PCBs (9078)	Post excavation verification of compliance with 25 mg/kg PCB cleanup standard. Sample location in accordance with TSCA.
B-172	2	PCBs (9078)	Post excavation verification of compliance with 25 mg/kg PCB cleanup standard. Sample location in accordance with TSCA.
B-173	2	PCBs (9078)	Post excavation verification of compliance with 25 mg/kg PCB cleanup standard. Sample location in accordance with TSCA.
B-174	2	PCBs (9078)	Post excavation verification of compliance with 25 mg/kg PCB cleanup standard. Sample location in accordance with TSCA.
B-175	2	PCBs (9078, 8082A/3540C)	Post excavation verification of compliance with 25 mg/kg PCB cleanup standard. Sample location in accordance with TSCA.
B-176	2	PCBs (9078)	Post excavation verification of compliance with 25 mg/kg PCB cleanup standard. Sample location in accordance with TSCA.
B-177	2	PCBs (9078)	Post excavation verification of compliance with 25 mg/kg PCB cleanup standard. Sample location in accordance with TSCA.
B-178	2	PCBs (9078)	Post excavation verification of compliance with 25 mg/kg PCB cleanup standard. Sample location in accordance with TSCA.

Sampling Location/ID Number	Depth (ft)	Analytical Parameter	Rationale
Bottom Samples			
B-179	2	PCBs (9078)	Post excavation verification of compliance with 25 mg/kg PCB cleanup standard. Sample location in accordance with TSCA.
B-180	2	PCBs (9078, 8082A/3540C)	Post excavation verification of compliance with 25 mg/kg PCB cleanup standard. Sample location in accordance with TSCA. Field Duplicate and Equipment Blank for PCBs - 9078 collected from this location.
B-181	2	PCBs (9078)	Post excavation verification of compliance with 25 mg/kg PCB cleanup standard. Sample location in accordance with TSCA.
B-182	2	PCBs (9078)	Post excavation verification of compliance with 25 mg/kg PCB cleanup standard. Sample location in accordance with TSCA.
B-183	2	PCBs (9078)	Post excavation verification of compliance with 25 mg/kg PCB cleanup standard. Sample location in accordance with TSCA.
B-184	2	PCBs (9078)	Post excavation verification of compliance with 25 mg/kg PCB cleanup standard. Sample location in accordance with TSCA.
B-185	2	PCBs (9078, 8082A/3540C)	Post excavation verification of compliance with 25 mg/kg PCB cleanup standard. Sample location in accordance with TSCA.
B-186	2	PCBs (9078)	Post excavation verification of compliance with 25 mg/kg PCB cleanup standard. Sample location in accordance with TSCA.
B-187	2	PCBs (9078)	Post excavation verification of compliance with 25 mg/kg PCB cleanup standard. Sample location in accordance with TSCA.
B-188	2	PCBs (9078)	Post excavation verification of compliance with 25 mg/kg PCB cleanup standard. Sample location in accordance with TSCA.
B-189	2	PCBs (9078)	Post excavation verification of compliance with 25 mg/kg PCB cleanup standard. Sample location in accordance with TSCA.
B-190	2	PCBs (9078, 8082A/3540C)	Post excavation verification of compliance with 25 mg/kg PCB cleanup standard. Sample location in accordance with TSCA.
B-191	2	PCBs (9078)	Post excavation verification of compliance with 25 mg/kg PCB cleanup standard. Sample location in accordance with TSCA.
B-192	2	PCBs (9078)	Post excavation verification of compliance with 25 mg/kg PCB cleanup standard. Sample location in accordance with TSCA.
B-193	1	PCBs (9078)	Post excavation verification of compliance with 25 mg/kg PCB cleanup standard. Sample location in accordance with TSCA.
B-194	1	PCBs (9078)	Post excavation verification of compliance with 25 mg/kg PCB cleanup standard. Sample location in accordance with TSCA.
B-195	1	PCBs (9078, 8082A/3540C)	Post excavation verification of compliance with 25 mg/kg PCB cleanup standard. Sample location in accordance with TSCA.
B-196	1	PCBs (9078)	Post excavation verification of compliance with 25 mg/kg PCB cleanup standard. Sample location in accordance with TSCA.
B-197	1	PCBs (9078)	Post excavation verification of compliance with 25 mg/kg PCB cleanup standard. Sample location in accordance with TSCA.
B-198	1	PCBs (9078)	Post excavation verification of compliance with 25 mg/kg PCB cleanup standard. Sample location in accordance with TSCA.

Sampling Location/ID Number	Depth (ft)	Analytical Parameter	Rationale
Bottom Samples			
B-199	1	PCBs (9078)	Post excavation verification of compliance with 25 mg/kg PCB cleanup standard. Sample location in accordance with TSCA.
B-200	1	PCBs (9078, 8082A/3540C)	Post excavation verification of compliance with 25 mg/kg PCB cleanup standard. Sample location in accordance with TSCA. Field Duplicate for PCBs - 9078 & 8082A/3540C, MS/MSD for PCBs - 8082A/3540C and Equipment Blank - 9078 & 8082A/3540C collected from this location.
B-201	1	PCBs (9078)	Post excavation verification of compliance with 25 mg/kg PCB cleanup standard. Sample location in accordance with TSCA.
B-202	1	PCBs (9078)	Post excavation verification of compliance with 25 mg/kg PCB cleanup standard. Sample location in accordance with TSCA.
B-203	1	PCBs (9078)	Post excavation verification of compliance with 25 mg/kg PCB cleanup standard. Sample location in accordance with TSCA.
B-204	1	PCBs (9078)	Post excavation verification of compliance with 25 mg/kg PCB cleanup standard. Sample location in accordance with TSCA.
B-205	1	PCBs (9078, 8082A/3540C)	Post excavation verification of compliance with 25 mg/kg PCB cleanup standard. Sample location in accordance with TSCA.
B-206	1	PCBs (9078)	Post excavation verification of compliance with 25 mg/kg PCB cleanup standard. Sample location in accordance with TSCA.
B-207	1	PCBs (9078)	Post excavation verification of compliance with 25 mg/kg PCB cleanup standard. Sample location in accordance with TSCA.
B-208	1	PCBs (9078)	Post excavation verification of compliance with 25 mg/kg PCB cleanup standard. Sample location in accordance with TSCA.
B-209	7	PCBs (9078)	Post excavation verification of compliance with 25 mg/kg PCB cleanup standard. Sample location in accordance with TSCA.
B-210	7	PCBs (9078, 8082A/3540C)	Post excavation verification of compliance with 25 mg/kg PCB cleanup standard. Sample location in accordance with TSCA.
B-211	7	PCBs (9078)	Post excavation verification of compliance with 25 mg/kg PCB cleanup standard. Sample location in accordance with TSCA.
B-212	7	PCBs (9078)	Post excavation verification of compliance with 25 mg/kg PCB cleanup standard. Sample location in accordance with TSCA.
B-213	7	PCBs (9078)	Post excavation verification of compliance with 25 mg/kg PCB cleanup standard. Sample location in accordance with TSCA.
B-214	7	PCBs (9078)	Post excavation verification of compliance with 25 mg/kg PCB cleanup standard. Sample location in accordance with TSCA.
B-215	7	PCBs (9078, 8082A/3540C)	Post excavation verification of compliance with 25 mg/kg PCB cleanup standard. Sample location in accordance with TSCA.
B-216	7	PCBs (9078)	Post excavation verification of compliance with 25 mg/kg PCB cleanup standard. Sample location in accordance with TSCA.
B-217	7	PCBs (9078)	Post excavation verification of compliance with 25 mg/kg PCB cleanup standard. Sample location in accordance with TSCA.

Sampling Location/ID Number	Depth (ft)	Analytical Parameter	Rationale
Bottom Samples			
B-218	7	PCBs (9078)	Post excavation verification of compliance with 25 mg/kg PCB cleanup standard. Sample location in accordance with TSCA.
B-219	7	PCBs (9078)	Post excavation verification of compliance with 25 mg/kg PCB cleanup standard. Sample location in accordance with TSCA.
B-220	7	PCBs (9078, 8082A/3540C)	Post excavation verification of compliance with 25 mg/kg PCB cleanup standard. Sample location in accordance with TSCA. Field Duplicate and Equipment Blank for PCBs - 9078 collected from this location.
B-221	7	PCBs (9078)	Post excavation verification of compliance with 25 mg/kg PCB cleanup standard. Sample location in accordance with TSCA.
B-222	7	PCBs (9078)	Post excavation verification of compliance with 25 mg/kg PCB cleanup standard. Sample location in accordance with TSCA.
B-223	7	PCBs (9078)	Post excavation verification of compliance with 25 mg/kg PCB cleanup standard. Sample location in accordance with TSCA.
B-224	7	PCBs (9078)	Post excavation verification of compliance with 25 mg/kg PCB cleanup standard. Sample location in accordance with TSCA.
B-225	7	PCBs (9078, 8082A/3540C)	Post excavation verification of compliance with 25 mg/kg PCB cleanup standard. Sample location in accordance with TSCA.
B-226	7	PCBs (9078)	Post excavation verification of compliance with 25 mg/kg PCB cleanup standard. Sample location in accordance with TSCA.
B-227	7	PCBs (9078)	Post excavation verification of compliance with 25 mg/kg PCB cleanup standard. Sample location in accordance with TSCA.
B-228	7	PCBs (9078)	Post excavation verification of compliance with 25 mg/kg PCB cleanup standard. Sample location in accordance with TSCA.
B-229	7	PCBs (9078)	Post excavation verification of compliance with 25 mg/kg PCB cleanup standard. Sample location in accordance with TSCA.
B-230	7	PCBs (9078, 8082A/3540C)	Post excavation verification of compliance with 25 mg/kg PCB cleanup standard. Sample location in accordance with TSCA.
B-231	7	PCBs (9078)	Post excavation verification of compliance with 25 mg/kg PCB cleanup standard. Sample location in accordance with TSCA.
B-232	7	PCBs (9078)	Post excavation verification of compliance with 25 mg/kg PCB cleanup standard. Sample location in accordance with TSCA.
B-233	7	PCBs (9078)	Post excavation verification of compliance with 25 mg/kg PCB cleanup standard. Sample location in accordance with TSCA.
B-234	7	PCBs (9078)	Post excavation verification of compliance with 25 mg/kg PCB cleanup standard. Sample location in accordance with TSCA.
B-235	7	PCBs (9078, 8082A/3540C)	Post excavation verification of compliance with 25 mg/kg PCB cleanup standard. Sample location in accordance with TSCA.
B-236	7	PCBs (9078)	Post excavation verification of compliance with 25 mg/kg PCB cleanup standard. Sample location in accordance with TSCA.
B-237	7	PCBs (9078)	Post excavation verification of compliance with 25 mg/kg PCB cleanup standard. Sample location in accordance with TSCA.

Sampling Location/ID Number	Depth (ft)	Analytical Parameter	Rationale
Bottom Samples			
B-238	7	PCBs (9078)	Post excavation verification of compliance with 25 mg/kg PCB cleanup standard. Sample location in accordance with TSCA.
B-239	7	PCBs (9078)	Post excavation verification of compliance with 25 mg/kg PCB cleanup standard. Sample location in accordance with TSCA.
B-240	7	PCBs (9078, 8082A/3540C)	Post excavation verification of compliance with 25 mg/kg PCB cleanup standard. Sample location in accordance with TSCA. Field Duplicate and Equipment Blank for PCBs - 9078 collected from this location.
B-241	7	PCBs (9078)	Post excavation verification of compliance with 25 mg/kg PCB cleanup standard. Sample location in accordance with TSCA.
B-242	7	PCBs (9078)	Post excavation verification of compliance with 25 mg/kg PCB cleanup standard. Sample location in accordance with TSCA.
B-243	7	PCBs (9078)	Post excavation verification of compliance with 25 mg/kg PCB cleanup standard. Sample location in accordance with TSCA.
B-244	7	PCBs (9078)	Post excavation verification of compliance with 25 mg/kg PCB cleanup standard. Sample location in accordance with TSCA.
B-245	7	PCBs (9078, 8082A/3540C)	Post excavation verification of compliance with 25 mg/kg PCB cleanup standard. Sample location in accordance with TSCA.
B-246	7	PCBs (9078)	Post excavation verification of compliance with 25 mg/kg PCB cleanup standard. Sample location in accordance with TSCA.
B-247	7	PCBs (9078)	Post excavation verification of compliance with 25 mg/kg PCB cleanup standard. Sample location in accordance with TSCA.
B-248	7	PCBs (9078)	Post excavation verification of compliance with 25 mg/kg PCB cleanup standard. Sample location in accordance with TSCA.
B-249	7	PCBs (9078)	Post excavation verification of compliance with 25 mg/kg PCB cleanup standard. Sample location in accordance with TSCA.
B-250	7	PCBs (9078, 8082A/3540C)	Post excavation verification of compliance with 25 mg/kg PCB cleanup standard. Sample location in accordance with TSCA.
B-251	7	PCBs (9078)	Post excavation verification of compliance with 25 mg/kg PCB cleanup standard. Sample location in accordance with TSCA.
B-252	7	PCBs (9078)	Post excavation verification of compliance with 25 mg/kg PCB cleanup standard. Sample location in accordance with TSCA.
B-253	7	PCBs (9078)	Post excavation verification of compliance with 25 mg/kg PCB cleanup standard. Sample location in accordance with TSCA.
B-254	7	PCBs (9078)	Post excavation verification of compliance with 25 mg/kg PCB cleanup standard. Sample location in accordance with TSCA.
B-255	7	PCBs (9078, 8082A/3540C)	Post excavation verification of compliance with 25 mg/kg PCB cleanup standard. Sample location in accordance with TSCA.
B-256	7	PCBs (9078)	Post excavation verification of compliance with 25 mg/kg PCB cleanup standard. Sample location in accordance with TSCA.
B-257	6	PCBs (9078)	Post excavation verification of compliance with 25 mg/kg PCB cleanup standard. Sample location in accordance with TSCA.

Sampling Location/ID Number	Depth (ft)	Analytical Parameter	Rationale
Bottom Samples			
B-258	6	PCBs (9078)	Post excavation verification of compliance with 25 mg/kg PCB cleanup standard. Sample location in accordance with TSCA.
B-259	6	PCBs (9078)	Post excavation verification of compliance with 25 mg/kg PCB cleanup standard. Sample location in accordance with TSCA.
B-260	6	PCBs (9078, 8082A/3540C)	Post excavation verification of compliance with 25 mg/kg PCB cleanup standard. Sample location in accordance with TSCA. Field Duplicate and Equipment Blank for PCBs - 9078 collected from this location.
B-261	6	PCBs (9078)	Post excavation verification of compliance with 25 mg/kg PCB cleanup standard. Sample location in accordance with TSCA.
B-262	6	PCBs (9078)	Post excavation verification of compliance with 25 mg/kg PCB cleanup standard. Sample location in accordance with TSCA.
B-263	6	PCBs (9078)	Post excavation verification of compliance with 25 mg/kg PCB cleanup standard. Sample location in accordance with TSCA.
B-264	6	PCBs (9078)	Post excavation verification of compliance with 25 mg/kg PCB cleanup standard. Sample location in accordance with TSCA.
B-265	6	PCBs (9078, 8082A/3540C)	Post excavation verification of compliance with 25 mg/kg PCB cleanup standard. Sample location in accordance with TSCA.
B-266	6	PCBs (9078)	Post excavation verification of compliance with 25 mg/kg PCB cleanup standard. Sample location in accordance with TSCA.
B-267	6	PCBs (9078)	Post excavation verification of compliance with 25 mg/kg PCB cleanup standard. Sample location in accordance with TSCA.
B-268	6	PCBs (9078)	Post excavation verification of compliance with 25 mg/kg PCB cleanup standard. Sample location in accordance with TSCA.
B-269	6	PCBs (9078)	Post excavation verification of compliance with 25 mg/kg PCB cleanup standard. Sample location in accordance with TSCA.
B-270	6	PCBs (9078, 8082A/3540C)	Post excavation verification of compliance with 25 mg/kg PCB cleanup standard. Sample location in accordance with TSCA.
B-271	2	PCBs (9078)	Post excavation verification of compliance with 25 mg/kg PCB cleanup standard. Sample location in accordance with TSCA.
B-272	2	PCBs (9078)	Post excavation verification of compliance with 25 mg/kg PCB cleanup standard. Sample location in accordance with TSCA.
B-273	2	PCBs (9078)	Post excavation verification of compliance with 25 mg/kg PCB cleanup standard. Sample location in accordance with TSCA.
B-274	2	PCBs (9078)	Post excavation verification of compliance with 25 mg/kg PCB cleanup standard. Sample location in accordance with TSCA.
B-275	2	PCBs (9078, 8082A/3540C)	Post excavation verification of compliance with 25 mg/kg PCB cleanup standard. Sample location in accordance with TSCA.
B-276	2	PCBs (9078)	Post excavation verification of compliance with 25 mg/kg PCB cleanup standard. Sample location in accordance with TSCA.
B-277	2	PCBs (9078)	Post excavation verification of compliance with 25 mg/kg PCB cleanup standard. Sample location in accordance with TSCA.

Sampling Location/ID Number	Depth (ft)	Analytical Parameter	Rationale
Bottom Samples			
B-278	2	PCBs (9078)	Post excavation verification of compliance with 25 mg/kg PCB cleanup standard. Sample location in accordance with TSCA.
B-279	2	PCBs (9078)	Post excavation verification of compliance with 25 mg/kg PCB cleanup standard. Sample location in accordance with TSCA.
B-280	2	PCBs (9078, 8082A/3540C)	Post excavation verification of compliance with 25 mg/kg PCB cleanup standard. Sample location in accordance with TSCA. Field Duplicate and Equipment Blank for PCBs - 9078 collected from this location.
B-281	2	PCBs (9078)	Post excavation verification of compliance with 25 mg/kg PCB cleanup standard. Sample location in accordance with TSCA.
B-282	2	PCBs (9078)	Post excavation verification of compliance with 25 mg/kg PCB cleanup standard. Sample location in accordance with TSCA.
B-283	2	PCBs (9078)	Post excavation verification of compliance with 25 mg/kg PCB cleanup standard. Sample location in accordance with TSCA.
B-284	2	PCBs (9078)	Post excavation verification of compliance with 25 mg/kg PCB cleanup standard. Sample location in accordance with TSCA.
B-285	2	PCBs (9078, 8082A/3540C)	Post excavation verification of compliance with 25 mg/kg PCB cleanup standard. Sample location in accordance with TSCA.
B-286	2	PCBs (9078)	Post excavation verification of compliance with 25 mg/kg PCB cleanup standard. Sample location in accordance with TSCA.
B-287	2	PCBs (9078)	Post excavation verification of compliance with 25 mg/kg PCB cleanup standard. Sample location in accordance with TSCA.
B-288	2	PCBs (9078)	Post excavation verification of compliance with 25 mg/kg PCB cleanup standard. Sample location in accordance with TSCA.
B-289	2	PCBs (9078)	Post excavation verification of compliance with 25 mg/kg PCB cleanup standard. Sample location in accordance with TSCA.
B-290	2	PCBs (9078, 8082A/3540C)	Post excavation verification of compliance with 25 mg/kg PCB cleanup standard. Sample location in accordance with TSCA.
B-291	2	PCBs (9078)	Post excavation verification of compliance with 25 mg/kg PCB cleanup standard. Sample location in accordance with TSCA.
B-292	2	PCBs (9078)	Post excavation verification of compliance with 25 mg/kg PCB cleanup standard. Sample location in accordance with TSCA.
B-293	2	PCBs (9078)	Post excavation verification of compliance with 25 mg/kg PCB cleanup standard. Sample location in accordance with TSCA.
B-294	2	PCBs (9078)	Post excavation verification of compliance with 25 mg/kg PCB cleanup standard. Sample location in accordance with TSCA.
B-295	2	PCBs (9078, 8082A/3540C)	Post excavation verification of compliance with 25 mg/kg PCB cleanup standard. Sample location in accordance with TSCA.
B-296	2	PCBs (9078)	Post excavation verification of compliance with 25 mg/kg PCB cleanup standard. Sample location in accordance with TSCA.
B-297	2	PCBs (9078)	Post excavation verification of compliance with 25 mg/kg PCB cleanup standard. Sample location in accordance with TSCA.

Sampling Location/ID Number	Depth (ft)	Analytical Parameter	Rationale
Bottom Samples			
B-298	2	PCBs (9078)	Post excavation verification of compliance with 25 mg/kg PCB cleanup standard. Sample location in accordance with TSCA.
B-299	2	PCBs (9078)	Post excavation verification of compliance with 25 mg/kg PCB cleanup standard. Sample location in accordance with TSCA.
B-300	2	PCBs (9078, 8082A/3540C)	Post excavation verification of compliance with 25 mg/kg PCB cleanup standard. Sample location in accordance with TSCA. Field Duplicate for PCBs - 9078 & 8082A/3540C, MS/MSD for PCBs - 8082A/3540C and Equipment Blank - 9078 & 8082A/3540C collected from this location.
B-301	2	PCBs (9078)	Post excavation verification of compliance with 25 mg/kg PCB cleanup standard. Sample location in accordance with TSCA.
B-302	2	PCBs (9078)	Post excavation verification of compliance with 25 mg/kg PCB cleanup standard. Sample location in accordance with TSCA.
B-303	2	PCBs (9078)	Post excavation verification of compliance with 25 mg/kg PCB cleanup standard. Sample location in accordance with TSCA.
B-304	2	PCBs (9078)	Post excavation verification of compliance with 25 mg/kg PCB cleanup standard. Sample location in accordance with TSCA.
B-305	2	PCBs (9078, 8082A/3540C)	Post excavation verification of compliance with 25 mg/kg PCB cleanup standard. Sample location in accordance with TSCA.
B-306	2	PCBs (9078)	Post excavation verification of compliance with 25 mg/kg PCB cleanup standard. Sample location in accordance with TSCA.
B-307	2	PCBs (9078)	Post excavation verification of compliance with 25 mg/kg PCB cleanup standard. Sample location in accordance with TSCA.
B-308	2	PCBs (9078)	Post excavation verification of compliance with 25 mg/kg PCB cleanup standard. Sample location in accordance with TSCA.
B-309	2	PCBs (9078)	Post excavation verification of compliance with 25 mg/kg PCB cleanup standard. Sample location in accordance with TSCA.
B-310	2	PCBs (9078, 8082A/3540C)	Post excavation verification of compliance with 25 mg/kg PCB cleanup standard. Sample location in accordance with TSCA.
B-311	2	PCBs (9078)	Post excavation verification of compliance with 25 mg/kg PCB cleanup standard. Sample location in accordance with TSCA.
B-312	2	PCBs (9078)	Post excavation verification of compliance with 25 mg/kg PCB cleanup standard. Sample location in accordance with TSCA.
B-313	2	PCBs (9078)	Post excavation verification of compliance with 25 mg/kg PCB cleanup standard. Sample location in accordance with TSCA.
B-314	2	PCBs (9078)	Post excavation verification of compliance with 25 mg/kg PCB cleanup standard. Sample location in accordance with TSCA.
B-315	2	PCBs (9078, 8082A/3540C)	Post excavation verification of compliance with 25 mg/kg PCB cleanup standard. Sample location in accordance with TSCA.
B-316	2	PCBs (9078)	Post excavation verification of compliance with 25 mg/kg PCB cleanup standard. Sample location in accordance with TSCA.

Sampling Location/ID Number	Depth (ft)	Analytical Parameter	Rationale
Bottom Samples			
B-317	2	PCBs (9078)	Post excavation verification of compliance with 25 mg/kg PCB cleanup standard. Sample location in accordance with TSCA.
B-318	2	PCBs (9078)	Post excavation verification of compliance with 25 mg/kg PCB cleanup standard. Sample location in accordance with TSCA.
B-319	2	PCBs (8082A/3540C)	Post excavation verification of compliance with 1 mg/kg (FEMA Floodway) PCB cleanup standard. Sample location in accordance with TSCA.
B-320	4	PCBs (8082A/3540C)	Post excavation verification of compliance with 1 mg/kg (FEMA Floodway) PCB cleanup standard. Sample location in accordance with TSCA.
B-321	4	PCBs (8082A/3540C)	Post excavation verification of compliance with 1 mg/kg (FEMA Floodway) PCB cleanup standard. Sample location in accordance with TSCA.
B-322	4	PCBs (8082A/3540C)	Post excavation verification of compliance with 1 mg/kg (FEMA Floodway) PCB cleanup standard. Sample location in accordance with TSCA.
B-323	4	PCBs (8082A/3540C)	Post excavation verification of compliance with 1 mg/kg (FEMA Floodway) PCB cleanup standard. Sample location in accordance with TSCA.
B-324	4	PCBs (8082A/3540C)	Post excavation verification of compliance with 1 mg/kg (FEMA Floodway) PCB cleanup standard. Sample location in accordance with TSCA.
B-325	4	PCBs (8082A/3540C)	Post excavation verification of compliance with 1 mg/kg (FEMA Floodway) PCB cleanup standard. Sample location in accordance with TSCA.
B-326	4	PCBs (8082A/3540C)	Post excavation verification of compliance with 1 mg/kg (FEMA Floodway) PCB cleanup standard. Sample location in accordance with TSCA.
B-327	4	PCBs (8082A/3540C)	Post excavation verification of compliance with 1 mg/kg (FEMA Floodway) PCB cleanup standard. Sample location in accordance with TSCA.
B-328	6	PCBs (8082A/3540C)	Post excavation verification of compliance with 1 mg/kg (FEMA Floodway) PCB cleanup standard. Sample location in accordance with TSCA.
B-329	6	PCBs (8082A/3540C)	Post excavation verification of compliance with 1 mg/kg (FEMA Floodway) PCB cleanup standard. Sample location in accordance with TSCA.
B-330	6	PCBs (8082A/3540C)	Post excavation verification of compliance with 1 mg/kg (FEMA Floodway) PCB cleanup standard. Sample location in accordance with TSCA.
B-331	6	PCBs (8082A/3540C)	Post excavation verification of compliance with 1 mg/kg (FEMA Floodway) PCB cleanup standard. Sample location in accordance with TSCA.

Sampling Location/ID Number	Depth (ft)	Analytical Parameter	Rationale
Bottom Samples			
B-332	6	PCBs (8082A/3540C)	Post excavation verification of compliance with 1 mg/kg (FEMA Floodway) PCB cleanup standard. Sample location in accordance with TSCA.
B-333	6	PCBs (8082A/3540C)	Post excavation verification of compliance with 1 mg/kg (FEMA Floodway) PCB cleanup standard. Sample location in accordance with TSCA.
B-334	6	PCBs (8082A/3540C)	Post excavation verification of compliance with 1 mg/kg (FEMA Floodway) PCB cleanup standard. Sample location in accordance with TSCA.
B-335	6	PCBs (8082A/3540C)	Post excavation verification of compliance with 1 mg/kg (FEMA Floodway) PCB cleanup standard. Sample location in accordance with TSCA. Field Duplicate, MS/MSD and Equipment Blank for PCBs - 8082A/3540C collected at this location.
B-336	6	PCBs (8082A/3540C)	Post excavation verification of compliance with 1 mg/kg (FEMA Floodway) PCB cleanup standard. Sample location in accordance with TSCA.
B-337	6	PCBs (8082A/3540C)	Post excavation verification of compliance with 1 mg/kg (FEMA Floodway) PCB cleanup standard. Sample location in accordance with TSCA.
B-338	6	PCBs (8082A/3540C)	Post excavation verification of compliance with 1 mg/kg (FEMA Floodway) PCB cleanup standard. Sample location in accordance with TSCA.
B-339	6	PCBs (8082A/3540C)	Post excavation verification of compliance with 1 mg/kg (FEMA Floodway) PCB cleanup standard. Sample location in accordance with TSCA.
B-340	6	PCBs (8082A/3540C)	Post excavation verification of compliance with 1 mg/kg (FEMA Floodway) PCB cleanup standard. Sample location in accordance with TSCA.
B-341	6	PCBs (8082A/3540C)	Post excavation verification of compliance with 1 mg/kg (FEMA Floodway) PCB cleanup standard. Sample location in accordance with TSCA.
B-342	6	PCBs (8082A/3540C)	Post excavation verification of compliance with 1 mg/kg (FEMA Floodway) PCB cleanup standard. Sample location in accordance with TSCA.
B-343	6	PCBs (8082A/3540C)	Post excavation verification of compliance with 1 mg/kg (FEMA Floodway) PCB cleanup standard. Sample location in accordance with TSCA.
B-344	6	PCBs (8082A/3540C)	Post excavation verification of compliance with 1 mg/kg (FEMA Floodway) PCB cleanup standard. Sample location in accordance with TSCA.
B-345	6	PCBs (8082A/3540C)	Post excavation verification of compliance with 1 mg/kg (FEMA Floodway) PCB cleanup standard. Sample location in accordance with TSCA.

Sampling Location/ID Number	Depth (ft)	Analytical Parameter	Rationale
Bottom Samples			
B-346	6	PCBs (8082A/3540C)	Post excavation verification of compliance with 1 mg/kg (FEMA Floodway) PCB cleanup standard. Sample location in accordance with TSCA.
B-347	6	PCBs (8082A/3540C)	Post excavation verification of compliance with 1 mg/kg (FEMA Floodway) PCB cleanup standard. Sample location in accordance with TSCA.
B-348	6	PCBs (8082A/3540C)	Post excavation verification of compliance with 1 mg/kg (FEMA Floodway) PCB cleanup standard. Sample location in accordance with TSCA.
B-349	6	PCBs (8082A/3540C)	Post excavation verification of compliance with 1 mg/kg (FEMA Floodway) PCB cleanup standard. Sample location in accordance with TSCA.
B-350	6	PCBs (8082A/3540C)	Post excavation verification of compliance with 1 mg/kg (FEMA Floodway) PCB cleanup standard. Sample location in accordance with TSCA.
B-351	6	PCBs (8082A/3540C)	Post excavation verification of compliance with 1 mg/kg (FEMA Floodway) PCB cleanup standard. Sample location in accordance with TSCA.
B-352	6	PCBs (8082A/3540C)	Post excavation verification of compliance with 1 mg/kg (FEMA Floodway) PCB cleanup standard. Sample location in accordance with TSCA.
B-353	6	PCBs (8082A/3540C)	Post excavation verification of compliance with 1 mg/kg (FEMA Floodway) PCB cleanup standard. Sample location in accordance with TSCA.
B-354	6	PCBs (8082A/3540C)	Post excavation verification of compliance with 1 mg/kg (FEMA Floodway) PCB cleanup standard. Sample location in accordance with TSCA.
B-355	6	PCBs (8082A/3540C)	Post excavation verification of compliance with 1 mg/kg (FEMA Floodway) PCB cleanup standard. Sample location in accordance with TSCA. Field Duplicate, MS/MSD and Equipment Blank for PCBs - 8082A/3540C collected at this location.
B-356	6	PCBs (8082A/3540C)	Post excavation verification of compliance with 1 mg/kg (FEMA Floodway) PCB cleanup standard. Sample location in accordance with TSCA.
B-357	6	PCBs (8082A/3540C)	Post excavation verification of compliance with 1 mg/kg (FEMA Floodway) PCB cleanup standard. Sample location in accordance with TSCA.
B-358	6	PCBs (8082A/3540C)	Post excavation verification of compliance with 1 mg/kg (FEMA Floodway) PCB cleanup standard. Sample location in accordance with TSCA.
B-359	6	PCBs (8082A/3540C)	Post excavation verification of compliance with 1 mg/kg (FEMA Floodway) PCB cleanup standard. Sample location in accordance with TSCA.

Sampling Location/ID Number	Depth (ft)	Analytical Parameter	Rationale
Bottom Samples			
B-360	6	PCBs (8082A/3540C)	Post excavation verification of compliance with 1 mg/kg (FEMA Floodway) PCB cleanup standard. Sample location in accordance with TSCA.
B-361	6	PCBs (8082A/3540C)	Post excavation verification of compliance with 1 mg/kg (FEMA Floodway) PCB cleanup standard. Sample location in accordance with TSCA.
B-362	6	PCBs (8082A/3540C)	Post excavation verification of compliance with 1 mg/kg (FEMA Floodway) PCB cleanup standard. Sample location in accordance with TSCA.
B-363	6	PCBs (8082A/3540C)	Post excavation verification of compliance with 1 mg/kg (FEMA Floodway) PCB cleanup standard. Sample location in accordance with TSCA.
B-364	6	PCBs (8082A/3540C)	Post excavation verification of compliance with 1 mg/kg (FEMA Floodway) PCB cleanup standard. Sample location in accordance with TSCA.
B-365	6	PCBs (8082A/3540C)	Post excavation verification of compliance with 1 mg/kg (FEMA Floodway) PCB cleanup standard. Sample location in accordance with TSCA.
B-366	6	PCBs (8082A/3540C)	Post excavation verification of compliance with 1 mg/kg (FEMA Floodway) PCB cleanup standard. Sample location in accordance with TSCA.
B-367	6	PCBs (8082A/3540C)	Post excavation verification of compliance with 1 mg/kg (FEMA Floodway) PCB cleanup standard. Sample location in accordance with TSCA.
B-368	6	PCBs (8082A/3540C)	Post excavation verification of compliance with 1 mg/kg (FEMA Floodway) PCB cleanup standard. Sample location in accordance with TSCA.
B-369	6	PCBs (8082A/3540C)	Post excavation verification of compliance with 1 mg/kg (FEMA Floodway) PCB cleanup standard. Sample location in accordance with TSCA.
B-370	6	PCBs (8082A/3540C)	Post excavation verification of compliance with 1 mg/kg (FEMA Floodway) PCB cleanup standard. Sample location in accordance with TSCA.
B-371	6	PCBs (8082A/3540C)	Post excavation verification of compliance with 1 mg/kg (FEMA Floodway) PCB cleanup standard. Sample location in accordance with TSCA.
B-372	6	PCBs (8082A/3540C)	Post excavation verification of compliance with 1 mg/kg (FEMA Floodway) PCB cleanup standard. Sample location in accordance with TSCA.
B-373	6	PCBs (8082A/3540C)	Post excavation verification of compliance with 1 mg/kg (FEMA Floodway) PCB cleanup standard. Sample location in accordance with TSCA.

Sampling Location/ID Number	Depth (ft)	Analytical Parameter	Rationale
Bottom Samples			
B-374	6	PCBs (8082A/3540C)	Post excavation verification of compliance with 1 mg/kg (FEMA Floodway) PCB cleanup standard. Sample location in accordance with TSCA.
B-375	6	PCBs (8082A/3540C)	Post excavation verification of compliance with 1 mg/kg (FEMA Floodway) PCB cleanup standard. Sample location in accordance with TSCA. Field Duplicate, MS/MSD and Equipment Blank for PCBs - 8082A/3540C collected at this location.
B-376	6	PCBs (8082A/3540C)	Post excavation verification of compliance with 1 mg/kg (FEMA Floodway) PCB cleanup standard. Sample location in accordance with TSCA.
B-377	6	PCBs (8082A/3540C)	Post excavation verification of compliance with 1 mg/kg (FEMA Floodway) PCB cleanup standard. Sample location in accordance with TSCA.
B-378	6	PCBs (8082A/3540C)	Post excavation verification of compliance with 1 mg/kg (FEMA Floodway) PCB cleanup standard. Sample location in accordance with TSCA.
B-379	6	PCBs (8082A/3540C)	Post excavation verification of compliance with 1 mg/kg (FEMA Floodway) PCB cleanup standard. Sample location in accordance with TSCA.
B-380	6	PCBs (8082A/3540C)	Post excavation verification of compliance with 1 mg/kg (FEMA Floodway) PCB cleanup standard. Sample location in accordance with TSCA.
B-381	6	PCBs (8082A/3540C)	Post excavation verification of compliance with 1 mg/kg (FEMA Floodway) PCB cleanup standard. Sample location in accordance with TSCA.
B-382	6	PCBs (8082A/3540C)	Post excavation verification of compliance with 1 mg/kg (FEMA Floodway) PCB cleanup standard. Sample location in accordance with TSCA.
B-383	6	PCBs (8082A/3540C)	Post excavation verification of compliance with 1 mg/kg (FEMA Floodway) PCB cleanup standard. Sample location in accordance with TSCA.
B-384	6	PCBs (8082A/3540C)	Post excavation verification of compliance with 1 mg/kg (FEMA Floodway) PCB cleanup standard. Sample location in accordance with TSCA.
B-385	6	PCBs (8082A/3540C)	Post excavation verification of compliance with 1 mg/kg (FEMA Floodway) PCB cleanup standard. Sample location in accordance with TSCA.
B-386	6	PCBs (8082A/3540C)	Post excavation verification of compliance with 1 mg/kg (FEMA Floodway) PCB cleanup standard. Sample location in accordance with TSCA.
B-387	6	PCBs (8082A/3540C)	Post excavation verification of compliance with 1 mg/kg (FEMA Floodway) PCB cleanup standard. Sample location in accordance with TSCA.

Sampling Location/ID Number	Depth (ft)	Analytical Parameter	Rationale
Bottom Samples			
B-388	6	PCBs (8082A/3540C)	Post excavation verification of compliance with 1 mg/kg (FEMA Floodway) PCB cleanup standard. Sample location in accordance with TSCA.
B-389	6	PCBs (8082A/3540C)	Post excavation verification of compliance with 1 mg/kg (FEMA Floodway) PCB cleanup standard. Sample location in accordance with TSCA.
B-390	6	PCBs (8082A/3540C)	Post excavation verification of compliance with 1 mg/kg (FEMA Floodway) PCB cleanup standard. Sample location in accordance with TSCA.
B-391	6	PCBs (8082A/3540C)	Post excavation verification of compliance with 1 mg/kg (FEMA Floodway) PCB cleanup standard. Sample location in accordance with TSCA.
B-392	6	PCBs (8082A/3540C)	Post excavation verification of compliance with 1 mg/kg (FEMA Floodway) PCB cleanup standard. Sample location in accordance with TSCA.
B-393	6	PCBs (8082A/3540C)	Post excavation verification of compliance with 1 mg/kg (FEMA Floodway) PCB cleanup standard. Sample location in accordance with TSCA.
B-394	6	PCBs (8082A/3540C)	Post excavation verification of compliance with 1 mg/kg (FEMA Floodway) PCB cleanup standard. Sample location in accordance with TSCA.
B-395	6	PCBs (8082A/3540C)	Post excavation verification of compliance with 1 mg/kg (FEMA Floodway) PCB cleanup standard. Sample location in accordance with TSCA. Field Duplicate, MS/MSD and Equipment Blank for PCBs - 8082A/3540C collected at this location.
B-396	6	PCBs (8082A/3540C)	Post excavation verification of compliance with 1 mg/kg (FEMA Floodway) PCB cleanup standard. Sample location in accordance with TSCA.
B-397	6	PCBs (8082A/3540C)	Post excavation verification of compliance with 1 mg/kg (FEMA Floodway) PCB cleanup standard. Sample location in accordance with TSCA.
B-398	6	PCBs (8082A/3540C)	Post excavation verification of compliance with 1 mg/kg (FEMA Floodway) PCB cleanup standard. Sample location in accordance with TSCA.
B-399	6	PCBs (8082A/3540C)	Post excavation verification of compliance with 1 mg/kg (FEMA Floodway) PCB cleanup standard. Sample location in accordance with TSCA.
B-400	6	PCBs (8082A/3540C)	Post excavation verification of compliance with 1 mg/kg (FEMA Floodway) PCB cleanup standard. Sample location in accordance with TSCA.
B-401	6	PCBs (8082A/3540C)	Post excavation verification of compliance with 1 mg/kg (FEMA Floodway) PCB cleanup standard. Sample location in accordance with TSCA.

Sampling Location/ID Number	Depth (ft)	Analytical Parameter	Rationale
Bottom Samples			
B-402	6	PCBs (8082A/3540C)	Post excavation verification of compliance with 1 mg/kg (FEMA Floodway) PCB cleanup standard. Sample location in accordance with TSCA.
B-403	6	PCBs (8082A/3540C)	Post excavation verification of compliance with 1 mg/kg (FEMA Floodway) PCB cleanup standard. Sample location in accordance with TSCA.
B-404	6	PCBs (8082A/3540C)	Post excavation verification of compliance with 1 mg/kg (FEMA Floodway) PCB cleanup standard. Sample location in accordance with TSCA.
B-405	6	PCBs (8082A/3540C)	Post excavation verification of compliance with 1 mg/kg (FEMA Floodway) PCB cleanup standard. Sample location in accordance with TSCA.
B-406	6	PCBs (8082A/3540C)	Post excavation verification of compliance with 1 mg/kg (FEMA Floodway) PCB cleanup standard. Sample location in accordance with TSCA.
B-407	6	PCBs (8082A/3540C)	Post excavation verification of compliance with 1 mg/kg (FEMA Floodway) PCB cleanup standard. Sample location in accordance with TSCA.
B-408	6	PCBs (8082A/3540C)	Post excavation verification of compliance with 1 mg/kg (FEMA Floodway) PCB cleanup standard. Sample location in accordance with TSCA.
B-409	6	PCBs (8082A/3540C)	Post excavation verification of compliance with 1 mg/kg (FEMA Floodway) PCB cleanup standard. Sample location in accordance with TSCA.
B-410	6	PCBs (8082A/3540C)	Post excavation verification of compliance with 1 mg/kg (FEMA Floodway) PCB cleanup standard. Sample location in accordance with TSCA.
B-411	6	PCBs (8082A/3540C)	Post excavation verification of compliance with 1 mg/kg (FEMA Floodway) PCB cleanup standard. Sample location in accordance with TSCA.
B-412	6	PCBs (8082A/3540C)	Post excavation verification of compliance with 1 mg/kg (FEMA Floodway) PCB cleanup standard. Sample location in accordance with TSCA.
B-413	6	PCBs (8082A/3540C)	Post excavation verification of compliance with 1 mg/kg (FEMA Floodway) PCB cleanup standard. Sample location in accordance with TSCA.
B-414	1	PCBs (9078)	Post excavation verification of compliance with 25 mg/kg PCB cleanup standard. Sample location in accordance with TSCA. Field Duplicate and Equipment Blank for PCBs - 9078 collected from this location.
B-415	1	PCBs (9078, 8082A/3540C)	Post excavation verification of compliance with 25 mg/kg PCB cleanup standard. Sample location in accordance with TSCA.

Sampling Location/ID Number	Depth (ft)	Analytical Parameter	Rationale
Bottom Samples			
B-416	1	PCBs (9078)	Post excavation verification of compliance with 25 mg/kg PCB cleanup standard. Sample location in accordance with TSCA.
B-417	1	PCBs (9078)	Post excavation verification of compliance with 25 mg/kg PCB cleanup standard. Sample location in accordance with TSCA.
B-418	1	PCBs (9078)	Post excavation verification of compliance with 25 mg/kg PCB cleanup standard. Sample location in accordance with TSCA.
B-419	1	PCBs (9078)	Post excavation verification of compliance with 25 mg/kg PCB cleanup standard. Sample location in accordance with TSCA.
B-420	1	PCBs (9078, 8082A/3540C)	Post excavation verification of compliance with 25 mg/kg PCB cleanup standard. Sample location in accordance with TSCA. Field Duplicate, MS/MSD and Equipment Blank for PCBs - 8082A/3540C collected at this location.
B-421	1	PCBs (9078)	Post excavation verification of compliance with 25 mg/kg PCB cleanup standard. Sample location in accordance with TSCA.
B-422	1	PCBs (9078)	Post excavation verification of compliance with 25 mg/kg PCB cleanup standard. Sample location in accordance with TSCA.
B-423	1	PCBs (9078)	Post excavation verification of compliance with 25 mg/kg PCB cleanup standard. Sample location in accordance with TSCA.
B-424	1	PCBs (9078)	Post excavation verification of compliance with 25 mg/kg PCB cleanup standard. Sample location in accordance with TSCA.
B-425	1	PCBs (9078, 8082A/3540C)	Post excavation verification of compliance with 25 mg/kg PCB cleanup standard. Sample location in accordance with TSCA.
B-426	1	PCBs (9078)	Post excavation verification of compliance with 25 mg/kg PCB cleanup standard. Sample location in accordance with TSCA.
B-427	1	PCBs (9078)	Post excavation verification of compliance with 25 mg/kg PCB cleanup standard. Sample location in accordance with TSCA.
B-428	1	PCBs (9078)	Post excavation verification of compliance with 25 mg/kg PCB cleanup standard. Sample location in accordance with TSCA.
B-429	1	PCBs (9078)	Post excavation verification of compliance with 25 mg/kg PCB cleanup standard. Sample location in accordance with TSCA.
B-430	1	PCBs (9078, 8082A/3540C)	Post excavation verification of compliance with 25 mg/kg PCB cleanup standard. Sample location in accordance with TSCA.
B-431	1	PCBs (9078)	Post excavation verification of compliance with 25 mg/kg PCB cleanup standard. Sample location in accordance with TSCA.
B-432	1	PCBs (9078)	Post excavation verification of compliance with 25 mg/kg PCB cleanup standard. Sample location in accordance with TSCA.
B-433	1	PCBs (9078)	Post excavation verification of compliance with 25 mg/kg PCB cleanup standard. Sample location in accordance with TSCA.
B-434	7	PCBs (9078)	Post excavation verification of compliance with 25 mg/kg PCB cleanup standard. Sample location in accordance with TSCA. Field Duplicate and Equipment Blank for PCBs - 9078 collected from this location.

Sampling Location/ID Number	Depth (ft)	Analytical Parameter	Rationale
Bottom Samples			
B-435	7	PCBs (9078, 8082A/3540C)	Post excavation verification of compliance with 25 mg/kg PCB cleanup standard. Sample location in accordance with TSCA.
B-436	7	PCBs (9078)	Post excavation verification of compliance with 25 mg/kg PCB cleanup standard. Sample location in accordance with TSCA.
B-437	7	PCBs (9078)	Post excavation verification of compliance with 25 mg/kg PCB cleanup standard. Sample location in accordance with TSCA.
B-438	7	PCBs (9078)	Post excavation verification of compliance with 25 mg/kg PCB cleanup standard. Sample location in accordance with TSCA.
B-439	7	PCBs (9078)	Post excavation verification of compliance with 25 mg/kg PCB cleanup standard. Sample location in accordance with TSCA.
B-440	7	PCBs (9078, 8082A/3540C)	Post excavation verification of compliance with 25 mg/kg PCB cleanup standard. Sample location in accordance with TSCA.
B-441	7	PCBs (9078)	Post excavation verification of compliance with 25 mg/kg PCB cleanup standard. Sample location in accordance with TSCA.
B-442	7	PCBs (9078)	Post excavation verification of compliance with 25 mg/kg PCB cleanup standard. Sample location in accordance with TSCA.
B-443	7	PCBs (9078)	Post excavation verification of compliance with 25 mg/kg PCB cleanup standard. Sample location in accordance with TSCA.
B-444	7	PCBs (9078)	Post excavation verification of compliance with 25 mg/kg PCB cleanup standard. Sample location in accordance with TSCA.
B-445	7	PCBs (9078, 8082A/3540C)	Post excavation verification of compliance with 25 mg/kg PCB cleanup standard. Sample location in accordance with TSCA.
B-446	7	PCBs (9078)	Post excavation verification of compliance with 25 mg/kg PCB cleanup standard. Sample location in accordance with TSCA.
B-447	7	PCBs (9078)	Post excavation verification of compliance with 25 mg/kg PCB cleanup standard. Sample location in accordance with TSCA.
B-448	7	PCBs (9078)	Post excavation verification of compliance with 25 mg/kg PCB cleanup standard. Sample location in accordance with TSCA.
B-449	7	PCBs (9078)	Post excavation verification of compliance with 25 mg/kg PCB cleanup standard. Sample location in accordance with TSCA.
B-450	1	PCBs (9078, 8082A/3540C)	Post excavation verification of compliance with 25 mg/kg PCB cleanup standard. Sample location in accordance with TSCA.
B-451	1	PCBs (9078)	Post excavation verification of compliance with 25 mg/kg PCB cleanup standard. Sample location in accordance with TSCA.
B-452	1	PCBs (9078)	Post excavation verification of compliance with 25 mg/kg PCB cleanup standard. Sample location in accordance with TSCA.
B-453	1	PCBs (9078)	Post excavation verification of compliance with 25 mg/kg PCB cleanup standard. Sample location in accordance with TSCA.
B-454	2	PCBs (9078)	Post excavation verification of compliance with 25 mg/kg PCB cleanup standard. Sample location in accordance with TSCA. Field Duplicate and Equipment Blank for PCBs - 9078 collected from this location.

Sampling Location/ID Number	Depth (ft)	Analytical Parameter	Rationale
Bottom Samples			
B-455	2	PCBs (9078, 8082A/3540C)	Post excavation verification of compliance with 25 mg/kg PCB cleanup standard. Sample location in accordance with TSCA.
B-456	2	PCBs (9078)	Post excavation verification of compliance with 25 mg/kg PCB cleanup standard. Sample location in accordance with TSCA.
B-457	2	PCBs (9078)	Post excavation verification of compliance with 25 mg/kg PCB cleanup standard. Sample location in accordance with TSCA.
B-458	2	PCBs (9078)	Post excavation verification of compliance with 25 mg/kg PCB cleanup standard. Sample location in accordance with TSCA.
B-459	2	PCBs (9078)	Post excavation verification of compliance with 25 mg/kg PCB cleanup standard. Sample location in accordance with TSCA.
B-460	2	PCBs (9078, 8082A/3540C)	Post excavation verification of compliance with 25 mg/kg PCB cleanup standard. Sample location in accordance with TSCA.
B-461	2	PCBs (9078)	Post excavation verification of compliance with 25 mg/kg PCB cleanup standard. Sample location in accordance with TSCA.
B-462	2	PCBs (9078)	Post excavation verification of compliance with 25 mg/kg PCB cleanup standard. Sample location in accordance with TSCA.
B-463	2	PCBs (9078)	Post excavation verification of compliance with 25 mg/kg PCB cleanup standard. Sample location in accordance with TSCA.
B-464	2	PCBs (9078)	Post excavation verification of compliance with 25 mg/kg PCB cleanup standard. Sample location in accordance with TSCA.
B-465	2	PCBs (9078, 8082A/3540C)	Post excavation verification of compliance with 25 mg/kg PCB cleanup standard. Sample location in accordance with TSCA.
B-466	2	PCBs (9078)	Post excavation verification of compliance with 25 mg/kg PCB cleanup standard. Sample location in accordance with TSCA.
B-467	2	PCBs (9078)	Post excavation verification of compliance with 25 mg/kg PCB cleanup standard. Sample location in accordance with TSCA.
B-468	2	PCBs (9078)	Post excavation verification of compliance with 25 mg/kg PCB cleanup standard. Sample location in accordance with TSCA.
B-469	2	PCBs (9078)	Post excavation verification of compliance with 25 mg/kg PCB cleanup standard. Sample location in accordance with TSCA.
B-470	2	PCBs (9078, 8082A/3540C)	Post excavation verification of compliance with 25 mg/kg PCB cleanup standard. Sample location in accordance with TSCA.
B-471	2	PCBs (9078)	Post excavation verification of compliance with 25 mg/kg PCB cleanup standard. Sample location in accordance with TSCA.
B-472	2	PCBs (9078)	Post excavation verification of compliance with 25 mg/kg PCB cleanup standard. Sample location in accordance with TSCA.
B-473	2	PCBs (9078)	Post excavation verification of compliance with 25 mg/kg PCB cleanup standard. Sample location in accordance with TSCA.
B-474	2	PCBs (9078)	Post excavation verification of compliance with 25 mg/kg PCB cleanup standard. Sample location in accordance with TSCA. Field Duplicate and Equipment Blank for PCBs - 9078 collected from this location.

Sampling Location/ID Number	Depth (ft)	Analytical Parameter	Rationale
Bottom Samples			
B-475	2	PCBs (9078, 8082A/3540C)	Post excavation verification of compliance with 25 mg/kg PCB cleanup standard. Sample location in accordance with TSCA.
B-476	2	PCBs (9078)	Post excavation verification of compliance with 25 mg/kg PCB cleanup standard. Sample location in accordance with TSCA.
B-477	2	PCBs (9078)	Post excavation verification of compliance with 25 mg/kg PCB cleanup standard. Sample location in accordance with TSCA.
B-478	2	PCBs (9078)	Post excavation verification of compliance with 25 mg/kg PCB cleanup standard. Sample location in accordance with TSCA.
B-479	2	PCBs (9078)	Post excavation verification of compliance with 25 mg/kg PCB cleanup standard. Sample location in accordance with TSCA.
B-480	2	PCBs (9078, 8082A/3540C)	Post excavation verification of compliance with 25 mg/kg PCB cleanup standard. Sample location in accordance with TSCA.
B-481	2	PCBs (9078)	Post excavation verification of compliance with 25 mg/kg PCB cleanup standard. Sample location in accordance with TSCA.
B-482	2	PCBs (9078)	Post excavation verification of compliance with 25 mg/kg PCB cleanup standard. Sample location in accordance with TSCA.
B-483	2	PCBs (9078)	Post excavation verification of compliance with 25 mg/kg PCB cleanup standard. Sample location in accordance with TSCA.
B-484	2	PCBs (9078)	Post excavation verification of compliance with 25 mg/kg PCB cleanup standard. Sample location in accordance with TSCA.
B-485	2	PCBs (9078, 8082A/3540C)	Post excavation verification of compliance with 25 mg/kg PCB cleanup standard. Sample location in accordance with TSCA.
B-486	2	PCBs (9078)	Post excavation verification of compliance with 25 mg/kg PCB cleanup standard. Sample location in accordance with TSCA.
B-487	2	PCBs (9078)	Post excavation verification of compliance with 25 mg/kg PCB cleanup standard. Sample location in accordance with TSCA.
B-488	2	PCBs (9078)	Post excavation verification of compliance with 25 mg/kg PCB cleanup standard. Sample location in accordance with TSCA.
B-489	2	PCBs (9078)	Post excavation verification of compliance with 25 mg/kg PCB cleanup standard. Sample location in accordance with TSCA.
B-490	2	PCBs (9078, 8082A/3540C)	Post excavation verification of compliance with 25 mg/kg PCB cleanup standard. Sample location in accordance with TSCA.
B-491	2	PCBs (9078)	Post excavation verification of compliance with 25 mg/kg PCB cleanup standard. Sample location in accordance with TSCA.
B-492	2	PCBs (9078)	Post excavation verification of compliance with 25 mg/kg PCB cleanup standard. Sample location in accordance with TSCA.
B-493	2	PCBs (9078)	Post excavation verification of compliance with 25 mg/kg PCB cleanup standard. Sample location in accordance with TSCA.
B-494	2	PCBs (9078)	Post excavation verification of compliance with 25 mg/kg PCB cleanup standard. Sample location in accordance with TSCA. Field Duplicate and Equipment Blank for PCBs - 9078 collected from this location.

Sampling Location/ID Number	Depth (ft)	Analytical Parameter	Rationale
Bottom Samples			
B-495	2	PCBs (9078, 8082A/3540C)	Post excavation verification of compliance with 25 mg/kg PCB cleanup standard. Sample location in accordance with TSCA.
B-496	2	PCBs (9078)	Post excavation verification of compliance with 25 mg/kg PCB cleanup standard. Sample location in accordance with TSCA.
B-497	2	PCBs (9078)	Post excavation verification of compliance with 25 mg/kg PCB cleanup standard. Sample location in accordance with TSCA.
B-498	2	PCBs (9078)	Post excavation verification of compliance with 25 mg/kg PCB cleanup standard. Sample location in accordance with TSCA.
B-499	2	PCBs (9078)	Post excavation verification of compliance with 25 mg/kg PCB cleanup standard. Sample location in accordance with TSCA.
B-500	2	PCBs (9078, 8082A/3540C)	Post excavation verification of compliance with 25 mg/kg PCB cleanup standard. Sample location in accordance with TSCA.
B-501	2	PCBs (9078)	Post excavation verification of compliance with 25 mg/kg PCB cleanup standard. Sample location in accordance with TSCA.
B-502	2	PCBs (9078)	Post excavation verification of compliance with 25 mg/kg PCB cleanup standard. Sample location in accordance with TSCA.
B-503	2	PCBs (9078)	Post excavation verification of compliance with 25 mg/kg PCB cleanup standard. Sample location in accordance with TSCA.
B-504	2	PCBs (9078)	Post excavation verification of compliance with 25 mg/kg PCB cleanup standard. Sample location in accordance with TSCA.
B-505	2	PCBs (9078, 8082A/3540C)	Post excavation verification of compliance with 25 mg/kg PCB cleanup standard. Sample location in accordance with TSCA.
B-506	2	PCBs (9078)	Post excavation verification of compliance with 25 mg/kg PCB cleanup standard. Sample location in accordance with TSCA.
B-507	2	PCBs (9078)	Post excavation verification of compliance with 25 mg/kg PCB cleanup standard. Sample location in accordance with TSCA.
B-508	2	PCBs (9078)	Post excavation verification of compliance with 25 mg/kg PCB cleanup standard. Sample location in accordance with TSCA.
B-509	2	PCBs (9078)	Post excavation verification of compliance with 25 mg/kg PCB cleanup standard. Sample location in accordance with TSCA.
B-510	2	PCBs (9078, 8082A/3540C)	Post excavation verification of compliance with 25 mg/kg PCB cleanup standard. Sample location in accordance with TSCA.
B-511	2	PCBs (9078)	Post excavation verification of compliance with 25 mg/kg PCB cleanup standard. Sample location in accordance with TSCA.
B-512	2	PCBs (9078)	Post excavation verification of compliance with 25 mg/kg PCB cleanup standard. Sample location in accordance with TSCA.
B-513	2	PCBs (9078)	Post excavation verification of compliance with 25 mg/kg PCB cleanup standard. Sample location in accordance with TSCA.
B-514	2	PCBs (9078)	Post excavation verification of compliance with 25 mg/kg PCB cleanup standard. Sample location in accordance with TSCA. Field Duplicate and Equipment Blank for PCBs - 9078 collected from this location.

Sampling Location/ID Number	Depth (ft)	Analytical Parameter	Rationale
Bottom Samples			
B-515	2	PCBs (9078, 8082A/3540C)	Post excavation verification of compliance with 25 mg/kg PCB cleanup standard. Sample location in accordance with TSCA. Field Duplicate, MS/MSD and Equipment Blank for PCBs - 8082A/3540C collected at this location.
B-516	2	PCBs (9078)	Post excavation verification of compliance with 25 mg/kg PCB cleanup standard. Sample location in accordance with TSCA.
B-517	2	PCBs (9078)	Post excavation verification of compliance with 25 mg/kg PCB cleanup standard. Sample location in accordance with TSCA.
B-518	3	PCBs (9078)	Post excavation verification of compliance with 25 mg/kg PCB cleanup standard. Sample location in accordance with TSCA.
B-519	3	PCBs (9078)	Post excavation verification of compliance with 25 mg/kg PCB cleanup standard. Sample location in accordance with TSCA.
B-520	3	PCBs (9078, 8082A/3540C)	Post excavation verification of compliance with 25 mg/kg PCB cleanup standard. Sample location in accordance with TSCA.
B-521	3	PCBs (9078)	Post excavation verification of compliance with 25 mg/kg PCB cleanup standard. Sample location in accordance with TSCA.
B-522	7	PCBs (9078)	Post excavation verification of compliance with 25 mg/kg PCB cleanup standard. Sample location in accordance with TSCA.
B-523	7	PCBs (9078)	Post excavation verification of compliance with 25 mg/kg PCB cleanup standard. Sample location in accordance with TSCA.
B-524	7	PCBs (9078)	Post excavation verification of compliance with 25 mg/kg PCB cleanup standard. Sample location in accordance with TSCA.
B-525	7	PCBs (9078, 8082A/3540C)	Post excavation verification of compliance with 25 mg/kg PCB cleanup standard. Sample location in accordance with TSCA.
B-526	7	PCBs (9078)	Post excavation verification of compliance with 25 mg/kg PCB cleanup standard. Sample location in accordance with TSCA.
B-527	7	PCBs (9078)	Post excavation verification of compliance with 25 mg/kg PCB cleanup standard. Sample location in accordance with TSCA.
B-528	7	PCBs (9078)	Post excavation verification of compliance with 25 mg/kg PCB cleanup standard. Sample location in accordance with TSCA.
B-529	7	PCBs (9078)	Post excavation verification of compliance with 25 mg/kg PCB cleanup standard. Sample location in accordance with TSCA.
B-530	7	PCBs (9078, 8082A/3540C)	Post excavation verification of compliance with 25 mg/kg PCB cleanup standard. Sample location in accordance with TSCA.
B-531	7	PCBs (9078)	Post excavation verification of compliance with 25 mg/kg PCB cleanup standard. Sample location in accordance with TSCA.
B-532	7	PCBs (9078)	Post excavation verification of compliance with 25 mg/kg PCB cleanup standard. Sample location in accordance with TSCA.
B-533	7	PCBs (9078)	Post excavation verification of compliance with 25 mg/kg PCB cleanup standard. Sample location in accordance with TSCA.

Sampling Location/ID Number	Depth (ft)	Analytical Parameter	Rationale
Bottom Samples			
B-534	7	PCBs (9078)	Post excavation verification of compliance with 25 mg/kg PCB cleanup standard. Sample location in accordance with TSCA. Field Duplicate and Equipment Blank for PCBs - 9078 collected from this location.
B-535	7	PCBs (9078, 8082A/3540C)	Post excavation verification of compliance with 25 mg/kg PCB cleanup standard. Sample location in accordance with TSCA.
B-536	7	PCBs (9078)	Post excavation verification of compliance with 25 mg/kg PCB cleanup standard. Sample location in accordance with TSCA.
B-537	7	PCBs (9078)	Post excavation verification of compliance with 25 mg/kg PCB cleanup standard. Sample location in accordance with TSCA.
B-538	7	PCBs (9078)	Post excavation verification of compliance with 25 mg/kg PCB cleanup standard. Sample location in accordance with TSCA.
B-539	7	PCBs (9078)	Post excavation verification of compliance with 25 mg/kg PCB cleanup standard. Sample location in accordance with TSCA.
B-540	7	PCBs (9078, 8082A/3540C)	Post excavation verification of compliance with 25 mg/kg PCB cleanup standard. Sample location in accordance with TSCA.
B-541	7	PCBs (9078)	Post excavation verification of compliance with 25 mg/kg PCB cleanup standard. Sample location in accordance with TSCA.
B-542	7	PCBs (9078)	Post excavation verification of compliance with 25 mg/kg PCB cleanup standard. Sample location in accordance with TSCA.
B-543	7	PCBs (9078)	Post excavation verification of compliance with 25 mg/kg PCB cleanup standard. Sample location in accordance with TSCA.
B-544	7	PCBs (9078)	Post excavation verification of compliance with 25 mg/kg PCB cleanup standard. Sample location in accordance with TSCA.
B-545	7	PCBs (9078, 8082A/3540C)	Post excavation verification of compliance with 25 mg/kg PCB cleanup standard. Sample location in accordance with TSCA.
B-546	7	PCBs (9078)	Post excavation verification of compliance with 25 mg/kg PCB cleanup standard. Sample location in accordance with TSCA.
B-547	7	PCBs (9078)	Post excavation verification of compliance with 25 mg/kg PCB cleanup standard. Sample location in accordance with TSCA.
B-548	7	PCBs (9078)	Post excavation verification of compliance with 25 mg/kg PCB cleanup standard. Sample location in accordance with TSCA.
B-549	7	PCBs (9078)	Post excavation verification of compliance with 25 mg/kg PCB cleanup standard. Sample location in accordance with TSCA.
B-550	7	PCBs (9078, 8082A/3540C)	Post excavation verification of compliance with 25 mg/kg PCB cleanup standard. Sample location in accordance with TSCA.
B-551	7	PCBs (9078)	Post excavation verification of compliance with 25 mg/kg PCB cleanup standard. Sample location in accordance with TSCA.
B-552	7	PCBs (9078)	Post excavation verification of compliance with 25 mg/kg PCB cleanup standard. Sample location in accordance with TSCA.
B-553	7	PCBs (9078)	Post excavation verification of compliance with 25 mg/kg PCB cleanup standard. Sample location in accordance with TSCA.

Sampling Location/ID Number	Depth (ft)	Analytical Parameter	Rationale
Bottom Samples			
B-554	3	PCBs (9078)	Post excavation verification of compliance with 25 mg/kg PCB cleanup standard. Sample location in accordance with TSCA. Field Duplicate and Equipment Blank for PCBs - 9078 collected from this location.
B-555	3	PCBs (9078, 8082A/3540C)	Post excavation verification of compliance with 25 mg/kg PCB cleanup standard. Sample location in accordance with TSCA.
B-556	3	PCBs (9078)	Post excavation verification of compliance with 25 mg/kg PCB cleanup standard. Sample location in accordance with TSCA.
B-557	3	PCBs (9078)	Post excavation verification of compliance with 25 mg/kg PCB cleanup standard. Sample location in accordance with TSCA.
B-558	3	PCBs (9078)	Post excavation verification of compliance with 25 mg/kg PCB cleanup standard. Sample location in accordance with TSCA.
B-559	3	PCBs (9078)	Post excavation verification of compliance with 25 mg/kg PCB cleanup standard. Sample location in accordance with TSCA.
B-560	3	PCBs (9078, 8082A/3540C)	Post excavation verification of compliance with 25 mg/kg PCB cleanup standard. Sample location in accordance with TSCA.
B-561	3	PCBs (9078)	Post excavation verification of compliance with 25 mg/kg PCB cleanup standard. Sample location in accordance with TSCA.
B-562	3	PCBs (9078)	Post excavation verification of compliance with 25 mg/kg PCB cleanup standard. Sample location in accordance with TSCA.
B-563	3	PCBs (9078)	Post excavation verification of compliance with 25 mg/kg PCB cleanup standard. Sample location in accordance with TSCA.
B-564	3	PCBs (9078)	Post excavation verification of compliance with 25 mg/kg PCB cleanup standard. Sample location in accordance with TSCA.
B-565	3	PCBs (9078, 8082A/3540C)	Post excavation verification of compliance with 25 mg/kg PCB cleanup standard. Sample location in accordance with TSCA.
B-566	3	PCBs (9078)	Post excavation verification of compliance with 25 mg/kg PCB cleanup standard. Sample location in accordance with TSCA.
B-567	3	PCBs (9078)	Post excavation verification of compliance with 25 mg/kg PCB cleanup standard. Sample location in accordance with TSCA.
B-568	3	PCBs (9078)	Post excavation verification of compliance with 25 mg/kg PCB cleanup standard. Sample location in accordance with TSCA.
B-569	3	PCBs (9078)	Post excavation verification of compliance with 25 mg/kg PCB cleanup standard. Sample location in accordance with TSCA.
B-570	3	PCBs (9078, 8082A/3540C)	Post excavation verification of compliance with 25 mg/kg PCB cleanup standard. Sample location in accordance with TSCA.
B-571	3	PCBs (9078)	Post excavation verification of compliance with 25 mg/kg PCB cleanup standard. Sample location in accordance with TSCA.
B-572	3	PCBs (9078)	Post excavation verification of compliance with 25 mg/kg PCB cleanup standard. Sample location in accordance with TSCA.
B-573	3	PCBs (9078)	Post excavation verification of compliance with 25 mg/kg PCB cleanup standard. Sample location in accordance with TSCA.

Sampling Location/ID Number	Depth (ft)	Analytical Parameter	Rationale
Bottom Samples			
B-574	3	PCBs (9078)	Post excavation verification of compliance with 25 mg/kg PCB cleanup standard. Sample location in accordance with TSCA. Field Duplicate and Equipment Blank for PCBs - 9078 collected from this location.
B-575	3	PCBs (9078, 8082A/3540C)	Post excavation verification of compliance with 25 mg/kg PCB cleanup standard. Sample location in accordance with TSCA.
B-576	3	PCBs (9078)	Post excavation verification of compliance with 25 mg/kg PCB cleanup standard. Sample location in accordance with TSCA.
B-577	3	PCBs (9078)	Post excavation verification of compliance with 25 mg/kg PCB cleanup standard. Sample location in accordance with TSCA.
B-578	3	PCBs (9078)	Post excavation verification of compliance with 25 mg/kg PCB cleanup standard. Sample location in accordance with TSCA.
B-579	3	PCBs (9078)	Post excavation verification of compliance with 25 mg/kg PCB cleanup standard. Sample location in accordance with TSCA.
B-580	3	PCBs (9078, 8082A/3540C)	Post excavation verification of compliance with 25 mg/kg PCB cleanup standard. Sample location in accordance with TSCA.
B-581	3	PCBs (9078)	Post excavation verification of compliance with 25 mg/kg PCB cleanup standard. Sample location in accordance with TSCA.
B-582	3	PCBs (9078)	Post excavation verification of compliance with 25 mg/kg PCB cleanup standard. Sample location in accordance with TSCA.
B-583	3	PCBs (9078)	Post excavation verification of compliance with 25 mg/kg PCB cleanup standard. Sample location in accordance with TSCA.
B-584	3	PCBs (9078)	Post excavation verification of compliance with 25 mg/kg PCB cleanup standard. Sample location in accordance with TSCA.
B-585	3	PCBs (9078, 8082A/3540C)	Post excavation verification of compliance with 25 mg/kg PCB cleanup standard. Sample location in accordance with TSCA.
B-586	3	PCBs (9078)	Post excavation verification of compliance with 25 mg/kg PCB cleanup standard. Sample location in accordance with TSCA.
B-587	3	PCBs (9078)	Post excavation verification of compliance with 25 mg/kg PCB cleanup standard. Sample location in accordance with TSCA.
B-588	3	PCBs (9078)	Post excavation verification of compliance with 25 mg/kg PCB cleanup standard. Sample location in accordance with TSCA.
B-589	3	PCBs (9078)	Post excavation verification of compliance with 25 mg/kg PCB cleanup standard. Sample location in accordance with TSCA.
B-590	3	PCBs (9078, 8082A/3540C)	Post excavation verification of compliance with 25 mg/kg PCB cleanup standard. Sample location in accordance with TSCA.
B-591	3	PCBs (9078)	Post excavation verification of compliance with 25 mg/kg PCB cleanup standard. Sample location in accordance with TSCA.
B-592	3	PCBs (9078)	Post excavation verification of compliance with 25 mg/kg PCB cleanup standard. Sample location in accordance with TSCA.
B-593	3	PCBs (9078)	Post excavation verification of compliance with 25 mg/kg PCB cleanup standard. Sample location in accordance with TSCA.

Sampling Location/ID Number	Depth (ft)	Analytical Parameter	Rationale
Bottom Samples			
B-594	3	PCBs (9078)	Post excavation verification of compliance with 25 mg/kg PCB cleanup standard. Sample location in accordance with TSCA. Field Duplicate and Equipment Blank for PCBs - 9078 collected from this location.
B-595	3	PCBs (9078, 8082A/3540C)	Post excavation verification of compliance with 25 mg/kg PCB cleanup standard. Sample location in accordance with TSCA.
B-596	3	PCBs (9078)	Post excavation verification of compliance with 25 mg/kg PCB cleanup standard. Sample location in accordance with TSCA.
B-597	3	PCBs (9078)	Post excavation verification of compliance with 25 mg/kg PCB cleanup standard. Sample location in accordance with TSCA.
B-598	3	PCBs (9078)	Post excavation verification of compliance with 25 mg/kg PCB cleanup standard. Sample location in accordance with TSCA.
B-599	3	PCBs (9078)	Post excavation verification of compliance with 25 mg/kg PCB cleanup standard. Sample location in accordance with TSCA.
B-600	3	PCBs (9078, 8082A/3540C)	Post excavation verification of compliance with 25 mg/kg PCB cleanup standard. Sample location in accordance with TSCA.
B-601	3	PCBs (9078)	Post excavation verification of compliance with 25 mg/kg PCB cleanup standard. Sample location in accordance with TSCA.
B-602	3	PCBs (9078)	Post excavation verification of compliance with 25 mg/kg PCB cleanup standard. Sample location in accordance with TSCA.
B-603	3	PCBs (9078)	Post excavation verification of compliance with 25 mg/kg PCB cleanup standard. Sample location in accordance with TSCA.
B-604	3	PCBs (9078)	Post excavation verification of compliance with 25 mg/kg PCB cleanup standard. Sample location in accordance with TSCA.
B-605	3	PCBs (9078, 8082A/3540C)	Post excavation verification of compliance with 25 mg/kg PCB cleanup standard. Sample location in accordance with TSCA.
B-606	3	PCBs (9078)	Post excavation verification of compliance with 25 mg/kg PCB cleanup standard. Sample location in accordance with TSCA.
B-607	3	PCBs (9078)	Post excavation verification of compliance with 25 mg/kg PCB cleanup standard. Sample location in accordance with TSCA.
B-608	3	PCBs (9078)	Post excavation verification of compliance with 25 mg/kg PCB cleanup standard. Sample location in accordance with TSCA.
B-609	3	PCBs (9078)	Post excavation verification of compliance with 25 mg/kg PCB cleanup standard. Sample location in accordance with TSCA.
B-610	3	PCBs (9078, 8082A/3540C)	Post excavation verification of compliance with 25 mg/kg PCB cleanup standard. Sample location in accordance with TSCA.
B-611	3	PCBs (9078)	Post excavation verification of compliance with 25 mg/kg PCB cleanup standard. Sample location in accordance with TSCA.
B-612	3	PCBs (9078)	Post excavation verification of compliance with 25 mg/kg PCB cleanup standard. Sample location in accordance with TSCA.
B-613	3	PCBs (9078)	Post excavation verification of compliance with 25 mg/kg PCB cleanup standard. Sample location in accordance with TSCA.

Sampling Location/ID Number	Depth (ft)	Analytical Parameter	Rationale
Bottom Samples			
B-614	3	PCBs (9078)	Post excavation verification of compliance with 25 mg/kg PCB cleanup standard. Sample location in accordance with TSCA. Field Duplicate and Equipment Blank for PCBs - 9078 collected from this location.
B-615	3	PCBs (9078, 8082A/3540C)	Post excavation verification of compliance with 25 mg/kg PCB cleanup standard. Sample location in accordance with TSCA. Field Duplicate, MS/MSD and Equipment Blank for PCBs - 8082A/3540C collected at this location.
B-616	3	PCBs (9078)	Post excavation verification of compliance with 25 mg/kg PCB cleanup standard. Sample location in accordance with TSCA.
B-617	3	PCBs (9078)	Post excavation verification of compliance with 25 mg/kg PCB cleanup standard. Sample location in accordance with TSCA.
B-618	3	PCBs (9078)	Post excavation verification of compliance with 25 mg/kg PCB cleanup standard. Sample location in accordance with TSCA.
B-619	3	PCBs (9078)	Post excavation verification of compliance with 25 mg/kg PCB cleanup standard. Sample location in accordance with TSCA.
B-620	3	PCBs (9078, 8082A/3540C)	Post excavation verification of compliance with 25 mg/kg PCB cleanup standard. Sample location in accordance with TSCA.
B-621	3	PCBs (9078)	Post excavation verification of compliance with 25 mg/kg PCB cleanup standard. Sample location in accordance with TSCA.
B-622	3	PCBs (9078)	Post excavation verification of compliance with 25 mg/kg PCB cleanup standard. Sample location in accordance with TSCA.
B-623	3	PCBs (9078)	Post excavation verification of compliance with 25 mg/kg PCB cleanup standard. Sample location in accordance with TSCA.
B-624	3	PCBs (9078)	Post excavation verification of compliance with 25 mg/kg PCB cleanup standard. Sample location in accordance with TSCA.
B-625	3	PCBs (9078, 8082A/3540C)	Post excavation verification of compliance with 25 mg/kg PCB cleanup standard. Sample location in accordance with TSCA.
B-626	3	PCBs (9078)	Post excavation verification of compliance with 25 mg/kg PCB cleanup standard. Sample location in accordance with TSCA.
B-627	3	PCBs (9078)	Post excavation verification of compliance with 25 mg/kg PCB cleanup standard. Sample location in accordance with TSCA.
B-628	3	PCBs (9078)	Post excavation verification of compliance with 25 mg/kg PCB cleanup standard. Sample location in accordance with TSCA.
B-629	3	PCBs (9078)	Post excavation verification of compliance with 25 mg/kg PCB cleanup standard. Sample location in accordance with TSCA.
B-630	3	PCBs (9078, 8082A/3540C)	Post excavation verification of compliance with 25 mg/kg PCB cleanup standard. Sample location in accordance with TSCA.
B-631	3	PCBs (9078)	Post excavation verification of compliance with 25 mg/kg PCB cleanup standard. Sample location in accordance with TSCA.
B-632	3	PCBs (9078)	Post excavation verification of compliance with 25 mg/kg PCB cleanup standard. Sample location in accordance with TSCA.

Sampling Location/ID Number	Depth (ft)	Analytical Parameter	Rationale
Bottom Samples			
B-633	3	PCBs (9078)	Post excavation verification of compliance with 25 mg/kg PCB cleanup standard. Sample location in accordance with TSCA.
B-634	3	PCBs (9078)	Post excavation verification of compliance with 25 mg/kg PCB cleanup standard. Sample location in accordance with TSCA. Field Duplicate and Equipment Blank for PCBs - 9078 collected from this location.
B-635	3	PCBs (9078, 8082A/3540C)	Post excavation verification of compliance with 25 mg/kg PCB cleanup standard. Sample location in accordance with TSCA.
B-636	3	PCBs (9078)	Post excavation verification of compliance with 25 mg/kg PCB cleanup standard. Sample location in accordance with TSCA.
B-637	1	PCBs (9078)	Post excavation verification of compliance with 25 mg/kg PCB cleanup standard. Sample location in accordance with TSCA.
B-638	1	PCBs (9078)	Post excavation verification of compliance with 25 mg/kg PCB cleanup standard. Sample location in accordance with TSCA.
B-639	1	PCBs (9078)	Post excavation verification of compliance with 25 mg/kg PCB cleanup standard. Sample location in accordance with TSCA.
B-640	1	PCBs (9078, 8082A/3540C)	Post excavation verification of compliance with 25 mg/kg PCB cleanup standard. Sample location in accordance with TSCA.
B-641	2	PCBs (8082A/3540C)	Post excavation verification of compliance with 1 mg/kg (FEMA Floodway) PCB cleanup standard. Sample location in accordance with TSCA.
B-642	2	PCBs (8082A/3540C)	Post excavation verification of compliance with 1 mg/kg (FEMA Floodway) PCB cleanup standard. Sample location in accordance with TSCA.
B-643	2	PCBs (8082A/3540C)	Post excavation verification of compliance with 1 mg/kg (FEMA Floodway) PCB cleanup standard. Sample location in accordance with TSCA.
B-644	2	PCBs (8082A/3540C)	Post excavation verification of compliance with 1 mg/kg (FEMA Floodway) PCB cleanup standard. Sample location in accordance with TSCA.
B-645	2	PCBs (8082A/3540C)	Post excavation verification of compliance with 1 mg/kg (FEMA Floodway) PCB cleanup standard. Sample location in accordance with TSCA.
B-646	2	PCBs (8082A/3540C)	Post excavation verification of compliance with 1 mg/kg (FEMA Floodway) PCB cleanup standard. Sample location in accordance with TSCA.
B-647	2	PCBs (8082A/3540C)	Post excavation verification of compliance with 1 mg/kg (FEMA Floodway) PCB cleanup standard. Sample location in accordance with TSCA.
B-648	2	PCBs (8082A/3540C)	Post excavation verification of compliance with 1 mg/kg (FEMA Floodway) PCB cleanup standard. Sample location in accordance with TSCA.

Sampling Location/ID Number	Depth (ft)	Analytical Parameter	Rationale
Bottom Samples			
B-649	2	PCBs (8082A/3540C)	Post excavation verification of compliance with 1 mg/kg (FEMA Floodway) PCB cleanup standard. Sample location in accordance with TSCA.
B-650	2	PCBs (8082A/3540C)	Post excavation verification of compliance with 1 mg/kg (FEMA Floodway) PCB cleanup standard. Sample location in accordance with TSCA.
B-651	2	PCBs (8082A/3540C)	Post excavation verification of compliance with 1 mg/kg (FEMA Floodway) PCB cleanup standard. Sample location in accordance with TSCA.
B-652	2	PCBs (8082A/3540C)	Post excavation verification of compliance with 1 mg/kg (FEMA Floodway) PCB cleanup standard. Sample location in accordance with TSCA.
B-653	2	PCBs (8082A/3540C)	Post excavation verification of compliance with 1 mg/kg (FEMA Floodway) PCB cleanup standard. Sample location in accordance with TSCA.
B-654	2	PCBs (8082A/3540C)	Post excavation verification of compliance with 1 mg/kg (FEMA Floodway) PCB cleanup standard. Sample location in accordance with TSCA.
B-655	2	PCBs (8082A/3540C)	Post excavation verification of compliance with 1 mg/kg (FEMA Floodway) PCB cleanup standard. Sample location in accordance with TSCA. Field Duplicate, MS/MSD and Equipment Blank for PCBs - 8082A/3540C collected at this location.
B-656	2	PCBs (8082A/3540C)	Post excavation verification of compliance with 1 mg/kg (FEMA Floodway) PCB cleanup standard. Sample location in accordance with TSCA.
B-657	2	PCBs (8082A/3540C)	Post excavation verification of compliance with 1 mg/kg (FEMA Floodway) PCB cleanup standard. Sample location in accordance with TSCA.
B-658	2	PCBs (8082A/3540C)	Post excavation verification of compliance with 1 mg/kg (FEMA Floodway) PCB cleanup standard. Sample location in accordance with TSCA.
B-659	2	PCBs (8082A/3540C)	Post excavation verification of compliance with 1 mg/kg (FEMA Floodway) PCB cleanup standard. Sample location in accordance with TSCA.
B-660	2	PCBs (8082A/3540C)	Post excavation verification of compliance with 1 mg/kg (FEMA Floodway) PCB cleanup standard. Sample location in accordance with TSCA.
B-661	2	PCBs (8082A/3540C)	Post excavation verification of compliance with 1 mg/kg (FEMA Floodway) PCB cleanup standard. Sample location in accordance with TSCA.
B-662	2	PCBs (8082A/3540C)	Post excavation verification of compliance with 1 mg/kg (FEMA Floodway) PCB cleanup standard. Sample location in accordance with TSCA.

Sampling Location/ID Number	Depth (ft)	Analytical Parameter	Rationale
Bottom Samples			
B-663	2	PCBs (8082A/3540C)	Post excavation verification of compliance with 1 mg/kg (FEMA Floodway) PCB cleanup standard. Sample location in accordance with TSCA.
B-664	2	PCBs (8082A/3540C)	Post excavation verification of compliance with 1 mg/kg (FEMA Floodway) PCB cleanup standard. Sample location in accordance with TSCA.
B-665	2	PCBs (8082A/3540C)	Post excavation verification of compliance with 1 mg/kg (FEMA Floodway) PCB cleanup standard. Sample location in accordance with TSCA.
B-666	2	PCBs (8082A/3540C)	Post excavation verification of compliance with 1 mg/kg (FEMA Floodway) PCB cleanup standard. Sample location in accordance with TSCA.
B-667	2	PCBs (8082A/3540C)	Post excavation verification of compliance with 1 mg/kg (FEMA Floodway) PCB cleanup standard. Sample location in accordance with TSCA.
B-668	2	PCBs (8082A/3540C)	Post excavation verification of compliance with 1 mg/kg (FEMA Floodway) PCB cleanup standard. Sample location in accordance with TSCA.
B-669	2	PCBs (8082A/3540C)	Post excavation verification of compliance with 1 mg/kg (FEMA Floodway) PCB cleanup standard. Sample location in accordance with TSCA.
B-670	2	PCBs (8082A/3540C)	Post excavation verification of compliance with 1 mg/kg (FEMA Floodway) PCB cleanup standard. Sample location in accordance with TSCA.
B-671	2	PCBs (8082A/3540C)	Post excavation verification of compliance with 1 mg/kg (FEMA Floodway) PCB cleanup standard. Sample location in accordance with TSCA.
B-672	2	PCBs (8082A/3540C)	Post excavation verification of compliance with 1 mg/kg (FEMA Floodway) PCB cleanup standard. Sample location in accordance with TSCA.
B-673	2	PCBs (8082A/3540C)	Post excavation verification of compliance with 1 mg/kg (FEMA Floodway) PCB cleanup standard. Sample location in accordance with TSCA.
B-674	2	PCBs (8082A/3540C)	Post excavation verification of compliance with 1 mg/kg (FEMA Floodway) PCB cleanup standard. Sample location in accordance with TSCA.
B-675	2	PCBs (8082A/3540C)	Post excavation verification of compliance with 1 mg/kg (FEMA Floodway) PCB cleanup standard. Sample location in accordance with TSCA. Field Duplicate, MS/MSD and Equipment Blank for PCBs - 8082A/3540C collected at this location.
B-676	2	PCBs (8082A/3540C)	Post excavation verification of compliance with 1 mg/kg (FEMA Floodway) PCB cleanup standard. Sample location in accordance with TSCA.

Sampling Location/ID Number	Depth (ft)	Analytical Parameter	Rationale
Bottom Samples			
B-677	2	PCBs (8082A/3540C)	Post excavation verification of compliance with 1 mg/kg (FEMA Floodway) PCB cleanup standard. Sample location in accordance with TSCA.
B-678	2	PCBs (8082A/3540C)	Post excavation verification of compliance with 1 mg/kg (FEMA Floodway) PCB cleanup standard. Sample location in accordance with TSCA.
B-679	2	PCBs (8082A/3540C)	Post excavation verification of compliance with 1 mg/kg (FEMA Floodway) PCB cleanup standard. Sample location in accordance with TSCA.
B-680	2	PCBs (8082A/3540C)	Post excavation verification of compliance with 1 mg/kg (FEMA Floodway) PCB cleanup standard. Sample location in accordance with TSCA.
B-681	2	PCBs (8082A/3540C)	Post excavation verification of compliance with 1 mg/kg (FEMA Floodway) PCB cleanup standard. Sample location in accordance with TSCA.
B-682	2	PCBs (8082A/3540C)	Post excavation verification of compliance with 1 mg/kg (FEMA Floodway) PCB cleanup standard. Sample location in accordance with TSCA.
B-683	2	PCBs (8082A/3540C)	Post excavation verification of compliance with 1 mg/kg (FEMA Floodway) PCB cleanup standard. Sample location in accordance with TSCA.
B-684	2	PCBs (8082A/3540C)	Post excavation verification of compliance with 1 mg/kg (FEMA Floodway) PCB cleanup standard. Sample location in accordance with TSCA.
B-685	2	PCBs (8082A/3540C)	Post excavation verification of compliance with 1 mg/kg (FEMA Floodway) PCB cleanup standard. Sample location in accordance with TSCA.
B-686	2	PCBs (8082A/3540C)	Post excavation verification of compliance with 1 mg/kg (FEMA Floodway) PCB cleanup standard. Sample location in accordance with TSCA.
B-687	2	PCBs (8082A/3540C)	Post excavation verification of compliance with 1 mg/kg (FEMA Floodway) PCB cleanup standard. Sample location in accordance with TSCA.
B-688	2	PCBs (8082A/3540C)	Post excavation verification of compliance with 1 mg/kg (FEMA Floodway) PCB cleanup standard. Sample location in accordance with TSCA.
B-689	2	PCBs (8082A/3540C)	Post excavation verification of compliance with 1 mg/kg (FEMA Floodway) PCB cleanup standard. Sample location in accordance with TSCA.
B-690	2	PCBs (8082A/3540C)	Post excavation verification of compliance with 1 mg/kg (FEMA Floodway) PCB cleanup standard. Sample location in accordance with TSCA.

Sampling Location/ID Number	Depth (ft)	Analytical Parameter	Rationale
Bottom Samples			
B-691	2	PCBs (8082A/3540C)	Post excavation verification of compliance with 1 mg/kg (FEMA Floodway) PCB cleanup standard. Sample location in accordance with TSCA.
B-692	2	PCBs (8082A/3540C)	Post excavation verification of compliance with 1 mg/kg (FEMA Floodway) PCB cleanup standard. Sample location in accordance with TSCA.
B-693	2	PCBs (8082A/3540C)	Post excavation verification of compliance with 1 mg/kg (FEMA Floodway) PCB cleanup standard. Sample location in accordance with TSCA.
B-694	2	PCBs (8082A/3540C)	Post excavation verification of compliance with 1 mg/kg (FEMA Floodway) PCB cleanup standard. Sample location in accordance with TSCA.
B-695	2	PCBs (8082A/3540C)	Post excavation verification of compliance with 1 mg/kg (FEMA Floodway) PCB cleanup standard. Sample location in accordance with TSCA. Field Duplicate, MS/MSD and Equipment Blank for PCBs - 8082A/3540C collected at this location.
B-696	2	PCBs (8082A/3540C)	Post excavation verification of compliance with 1 mg/kg (FEMA Floodway) PCB cleanup standard. Sample location in accordance with TSCA.
B-697	2	PCBs (8082A/3540C)	Post excavation verification of compliance with 1 mg/kg (FEMA Floodway) PCB cleanup standard. Sample location in accordance with TSCA.
B-698	2	PCBs (8082A/3540C)	Post excavation verification of compliance with 1 mg/kg (FEMA Floodway) PCB cleanup standard. Sample location in accordance with TSCA.
B-699	2	PCBs (8082A/3540C)	Post excavation verification of compliance with 1 mg/kg (FEMA Floodway) PCB cleanup standard. Sample location in accordance with TSCA.
B-700	2	PCBs (8082A/3540C)	Post excavation verification of compliance with 1 mg/kg (FEMA Floodway) PCB cleanup standard. Sample location in accordance with TSCA.
B-701	2	PCBs (8082A/3540C)	Post excavation verification of compliance with 1 mg/kg (FEMA Floodway) PCB cleanup standard. Sample location in accordance with TSCA.
B-702	2	PCBs (8082A/3540C)	Post excavation verification of compliance with 1 mg/kg (FEMA Floodway) PCB cleanup standard. Sample location in accordance with TSCA.
B-703	2	PCBs (8082A/3540C)	Post excavation verification of compliance with 1 mg/kg (FEMA Floodway) PCB cleanup standard. Sample location in accordance with TSCA.
B-704	2	PCBs (8082A/3540C)	Post excavation verification of compliance with 1 mg/kg (FEMA Floodway) PCB cleanup standard. Sample location in accordance with TSCA.

Sampling Location/ID Number	Depth (ft)	Analytical Parameter	Rationale
Bottom Samples			
B-705	2	PCBs (8082A/3540C)	Post excavation verification of compliance with 1 mg/kg (FEMA Floodway) PCB cleanup standard. Sample location in accordance with TSCA.
B-706	4	PCBs (8082A/3540C)	Post excavation verification of compliance with 1 mg/kg (FEMA Floodway) PCB cleanup standard. Sample location in accordance with TSCA.
B-707	4	PCBs (8082A/3540C)	Post excavation verification of compliance with 1 mg/kg (FEMA Floodway) PCB cleanup standard. Sample location in accordance with TSCA.
B-708	4	PCBs (8082A/3540C)	Post excavation verification of compliance with 1 mg/kg (FEMA Floodway) PCB cleanup standard. Sample location in accordance with TSCA.
B-709	4	PCBs (8082A/3540C)	Post excavation verification of compliance with 1 mg/kg (FEMA Floodway) PCB cleanup standard. Sample location in accordance with TSCA.
B-710	4	PCBs (8082A/3540C)	Post excavation verification of compliance with 1 mg/kg (FEMA Floodway) PCB cleanup standard. Sample location in accordance with TSCA.
B-711	4	PCBs (8082A/3540C)	Post excavation verification of compliance with 1 mg/kg (FEMA Floodway) PCB cleanup standard. Sample location in accordance with TSCA.
B-712	4	PCBs (8082A/3540C)	Post excavation verification of compliance with 1 mg/kg (FEMA Floodway) PCB cleanup standard. Sample location in accordance with TSCA.
B-713	4	PCBs (8082A/3540C)	Post excavation verification of compliance with 1 mg/kg (FEMA Floodway) PCB cleanup standard. Sample location in accordance with TSCA.
B-714	4	PCBs (8082A/3540C)	Post excavation verification of compliance with 1 mg/kg (FEMA Floodway) PCB cleanup standard. Sample location in accordance with TSCA.
B-715	4	PCBs (8082A/3540C)	Post excavation verification of compliance with 1 mg/kg (FEMA Floodway) PCB cleanup standard. Sample location in accordance with TSCA. Field Duplicate, MS/MSD and Equipment Blank for PCBs - 8082A/3540C collected at this location.
B-716	4	PCBs (8082A/3540C)	Post excavation verification of compliance with 1 mg/kg (FEMA Floodway) PCB cleanup standard. Sample location in accordance with TSCA.
B-717	4	PCBs (8082A/3540C)	Post excavation verification of compliance with 1 mg/kg (FEMA Floodway) PCB cleanup standard. Sample location in accordance with TSCA.
B-718	4	PCBs (8082A/3540C)	Post excavation verification of compliance with 1 mg/kg (FEMA Floodway) PCB cleanup standard. Sample location in accordance with TSCA.

Sampling Location/ID Number	Depth (ft)	Analytical Parameter	Rationale
Bottom Samples			
B-719	4	PCBs (8082A/3540C)	Post excavation verification of compliance with 1 mg/kg (FEMA Floodway) PCB cleanup standard. Sample location in accordance with TSCA.
B-720	4	PCBs (8082A/3540C)	Post excavation verification of compliance with 1 mg/kg (FEMA Floodway) PCB cleanup standard. Sample location in accordance with TSCA.
B-721	4	PCBs (8082A/3540C)	Post excavation verification of compliance with 1 mg/kg (FEMA Floodway) PCB cleanup standard. Sample location in accordance with TSCA.
B-722	4	PCBs (8082A/3540C)	Post excavation verification of compliance with 1 mg/kg (FEMA Floodway) PCB cleanup standard. Sample location in accordance with TSCA.
B-723	4	PCBs (8082A/3540C)	Post excavation verification of compliance with 1 mg/kg (FEMA Floodway) PCB cleanup standard. Sample location in accordance with TSCA.
B-724	4	PCBs (8082A/3540C)	Post excavation verification of compliance with 1 mg/kg (FEMA Floodway) PCB cleanup standard. Sample location in accordance with TSCA.
B-725	4	PCBs (8082A/3540C)	Post excavation verification of compliance with 1 mg/kg (FEMA Floodway) PCB cleanup standard. Sample location in accordance with TSCA.
B-726	4	PCBs (8082A/3540C)	Post excavation verification of compliance with 1 mg/kg (FEMA Floodway) PCB cleanup standard. Sample location in accordance with TSCA.
B-727	4	PCBs (8082A/3540C)	Post excavation verification of compliance with 1 mg/kg (FEMA Floodway) PCB cleanup standard. Sample location in accordance with TSCA.
B-728	4	PCBs (8082A/3540C)	Post excavation verification of compliance with 1 mg/kg (FEMA Floodway) PCB cleanup standard. Sample location in accordance with TSCA.
B-729	4	PCBs (8082A/3540C)	Post excavation verification of compliance with 1 mg/kg (FEMA Floodway) PCB cleanup standard. Sample location in accordance with TSCA.
B-730	4	PCBs (8082A/3540C)	Post excavation verification of compliance with 1 mg/kg (FEMA Floodway) PCB cleanup standard. Sample location in accordance with TSCA.
B-731	4	PCBs (8082A/3540C)	Post excavation verification of compliance with 1 mg/kg (FEMA Floodway) PCB cleanup standard. Sample location in accordance with TSCA.
B-732	4	PCBs (8082A/3540C)	Post excavation verification of compliance with 1 mg/kg (FEMA Floodway) PCB cleanup standard. Sample location in accordance with TSCA.

Sampling Location/ID Number	Depth (ft)	Analytical Parameter	Rationale
Bottom Samples			
B-733	4	PCBs (8082A/3540C)	Post excavation verification of compliance with 1 mg/kg (FEMA Floodway) PCB cleanup standard. Sample location in accordance with TSCA.
B-734	4	PCBs (8082A/3540C)	Post excavation verification of compliance with 1 mg/kg (FEMA Floodway) PCB cleanup standard. Sample location in accordance with TSCA.
B-735	4	PCBs (8082A/3540C)	Post excavation verification of compliance with 1 mg/kg (FEMA Floodway) PCB cleanup standard. Sample location in accordance with TSCA. Field Duplicate, MS/MSD and Equipment Blank for PCBs - 8082A/3540C collected at this location.
B-736	4	PCBs (8082A/3540C)	Post excavation verification of compliance with 1 mg/kg (FEMA Floodway) PCB cleanup standard. Sample location in accordance with TSCA.
B-737	4	PCBs (8082A/3540C)	Post excavation verification of compliance with 1 mg/kg (FEMA Floodway) PCB cleanup standard. Sample location in accordance with TSCA.
B-738	4	PCBs (8082A/3540C)	Post excavation verification of compliance with 1 mg/kg (FEMA Floodway) PCB cleanup standard. Sample location in accordance with TSCA.
B-739	4	PCBs (8082A/3540C)	Post excavation verification of compliance with 1 mg/kg (FEMA Floodway) PCB cleanup standard. Sample location in accordance with TSCA.
B-740	4	PCBs (8082A/3540C)	Post excavation verification of compliance with 1 mg/kg (FEMA Floodway) PCB cleanup standard. Sample location in accordance with TSCA.
B-741	4	PCBs (8082A/3540C)	Post excavation verification of compliance with 1 mg/kg (FEMA Floodway) PCB cleanup standard. Sample location in accordance with TSCA.
B-742	4	PCBs (8082A/3540C)	Post excavation verification of compliance with 1 mg/kg (FEMA Floodway) PCB cleanup standard. Sample location in accordance with TSCA.
B-743	4	PCBs (8082A/3540C)	Post excavation verification of compliance with 1 mg/kg (FEMA Floodway) PCB cleanup standard. Sample location in accordance with TSCA.
B-744	4	PCBs (8082A/3540C)	Post excavation verification of compliance with 1 mg/kg (FEMA Floodway) PCB cleanup standard. Sample location in accordance with TSCA.
B-745	4	PCBs (8082A/3540C)	Post excavation verification of compliance with 1 mg/kg (FEMA Floodway) PCB cleanup standard. Sample location in accordance with TSCA.
B-746	4	PCBs (8082A/3540C)	Post excavation verification of compliance with 1 mg/kg (FEMA Floodway) PCB cleanup standard. Sample location in accordance with TSCA.

Sampling Location/ID Number	Depth (ft)	Analytical Parameter	Rationale
Bottom Samples			
B-747	4	PCBs (8082A/3540C)	Post excavation verification of compliance with 1 mg/kg (FEMA Floodway) PCB cleanup standard. Sample location in accordance with TSCA.
B-748	4	PCBs (8082A/3540C)	Post excavation verification of compliance with 1 mg/kg (FEMA Floodway) PCB cleanup standard. Sample location in accordance with TSCA.
B-749	4	PCBs (8082A/3540C)	Post excavation verification of compliance with 1 mg/kg (FEMA Floodway) PCB cleanup standard. Sample location in accordance with TSCA.
B-750	4	PCBs (8082A/3540C)	Post excavation verification of compliance with 1 mg/kg (FEMA Floodway) PCB cleanup standard. Sample location in accordance with TSCA.
B-751	4	PCBs (8082A/3540C)	Post excavation verification of compliance with 1 mg/kg (FEMA Floodway) PCB cleanup standard. Sample location in accordance with TSCA.
B-752	4	PCBs (8082A/3540C)	Post excavation verification of compliance with 1 mg/kg (FEMA Floodway) PCB cleanup standard. Sample location in accordance with TSCA.
B-753	4	PCBs (8082A/3540C)	Post excavation verification of compliance with 1 mg/kg (FEMA Floodway) PCB cleanup standard. Sample location in accordance with TSCA.
B-754	4	PCBs (8082A/3540C)	Post excavation verification of compliance with 1 mg/kg (FEMA Floodway) PCB cleanup standard. Sample location in accordance with TSCA.
B-755	4	PCBs (8082A/3540C)	Post excavation verification of compliance with 1 mg/kg (FEMA Floodway) PCB cleanup standard. Sample location in accordance with TSCA. Field Duplicate, MS/MSD and Equipment Blank for PCBs - 8082A/3540C collected at this location.
B-756	4	PCBs (8082A/3540C)	Post excavation verification of compliance with 1 mg/kg (FEMA Floodway) PCB cleanup standard. Sample location in accordance with TSCA.
B-757	4	PCBs (8082A/3540C)	Post excavation verification of compliance with 1 mg/kg (FEMA Floodway) PCB cleanup standard. Sample location in accordance with TSCA.
B-758	4	PCBs (8082A/3540C)	Post excavation verification of compliance with 1 mg/kg (FEMA Floodway) PCB cleanup standard. Sample location in accordance with TSCA.
B-759	4	PCBs (8082A/3540C)	Post excavation verification of compliance with 1 mg/kg (FEMA Floodway) PCB cleanup standard. Sample location in accordance with TSCA.
B-760	4	PCBs (8082A/3540C)	Post excavation verification of compliance with 1 mg/kg (FEMA Floodway) PCB cleanup standard. Sample location in accordance with TSCA.

Sampling Location/ID Number	Depth (ft)	Analytical Parameter	Rationale
Bottom Samples			
B-761	4	PCBs (8082A/3540C)	Post excavation verification of compliance with 1 mg/kg (FEMA Floodway) PCB cleanup standard. Sample location in accordance with TSCA.
B-762	4	PCBs (8082A/3540C)	Post excavation verification of compliance with 1 mg/kg (FEMA Floodway) PCB cleanup standard. Sample location in accordance with TSCA.
B-763	4	PCBs (8082A/3540C)	Post excavation verification of compliance with 1 mg/kg (FEMA Floodway) PCB cleanup standard. Sample location in accordance with TSCA.
B-764	3	PCBs (8082A/3540C)	Post excavation verification of compliance with 1 mg/kg (FEMA Floodway) PCB cleanup standard. Sample location in accordance with TSCA.
B-765	3	PCBs (8082A/3540C)	Post excavation verification of compliance with 1 mg/kg (FEMA Floodway) PCB cleanup standard. Sample location in accordance with TSCA.
B-766	3	PCBs (8082A/3540C)	Post excavation verification of compliance with 1 mg/kg (FEMA Floodway) PCB cleanup standard. Sample location in accordance with TSCA.
B-767	3	PCBs (8082A/3540C)	Post excavation verification of compliance with 1 mg/kg (FEMA Floodway) PCB cleanup standard. Sample location in accordance with TSCA.
B-768	3	PCBs (9078)	Post excavation verification of compliance with 25 mg/kg PCB cleanup standard. Sample location in accordance with TSCA.
B-769	3	PCBs (9078)	Post excavation verification of compliance with 25 mg/kg PCB cleanup standard. Sample location in accordance with TSCA.
B-770	3	PCBs (9078, 8082A/3540C)	Post excavation verification of compliance with 25 mg/kg PCB cleanup standard. Sample location in accordance with TSCA.
B-771	3	PCBs (9078)	Post excavation verification of compliance with 25 mg/kg PCB cleanup standard. Sample location in accordance with TSCA.
B-772	3	PCBs (9078)	Post excavation verification of compliance with 25 mg/kg PCB cleanup standard. Sample location in accordance with TSCA.
B-773	3	PCBs (9078)	Post excavation verification of compliance with 25 mg/kg PCB cleanup standard. Sample location in accordance with TSCA.
B-774	3	PCBs (9078)	Post excavation verification of compliance with 25 mg/kg PCB cleanup standard. Sample location in accordance with TSCA.
B-775	3	PCBs (9078, 8082A/3540C)	Post excavation verification of compliance with 25 mg/kg PCB cleanup standard. Sample location in accordance with TSCA.
B-776	3	PCBs (9078)	Post excavation verification of compliance with 25 mg/kg PCB cleanup standard. Sample location in accordance with TSCA.
B-777	3	PCBs (9078)	Post excavation verification of compliance with 25 mg/kg PCB cleanup standard. Sample location in accordance with TSCA.
B-778	3	PCBs (9078)	Post excavation verification of compliance with 25 mg/kg PCB cleanup standard. Sample location in accordance with TSCA.

Sampling Location/ID Number	Depth (ft)	Analytical Parameter	Rationale
Bottom Samples			
B-779	3	PCBs (9078)	Post excavation verification of compliance with 25 mg/kg PCB cleanup standard. Sample location in accordance with TSCA.
B-780	3	PCBs (9078, 8082A/3540C)	Post excavation verification of compliance with 25 mg/kg PCB cleanup standard. Sample location in accordance with TSCA.
B-781	3	PCBs (9078)	Post excavation verification of compliance with 25 mg/kg PCB cleanup standard. Sample location in accordance with TSCA. Field Duplicate and Equipment Blank for PCBs - 9078 collected from this location.
B-782	3	PCBs (9078)	Post excavation verification of compliance with 25 mg/kg PCB cleanup standard. Sample location in accordance with TSCA.
B-783	3	PCBs (9078)	Post excavation verification of compliance with 25 mg/kg PCB cleanup standard. Sample location in accordance with TSCA.
B-784	3	PCBs (9078)	Post excavation verification of compliance with 25 mg/kg PCB cleanup standard. Sample location in accordance with TSCA.
B-785	3	PCBs (9078, 8082A/3540C)	Post excavation verification of compliance with 25 mg/kg PCB cleanup standard. Sample location in accordance with TSCA.
B-786	3	PCBs (9078)	Post excavation verification of compliance with 25 mg/kg PCB cleanup standard. Sample location in accordance with TSCA.
B-787	3	PCBs (9078)	Post excavation verification of compliance with 25 mg/kg PCB cleanup standard. Sample location in accordance with TSCA.
B-788	1	PCBs (9078)	Post excavation verification of compliance with 25 mg/kg PCB cleanup standard. Sample location in accordance with TSCA.
B-789	1	PCBs (9078)	Post excavation verification of compliance with 25 mg/kg PCB cleanup standard. Sample location in accordance with TSCA.
B-790	3	PCBs (9078, 8082A/3540C)	Post excavation verification of compliance with 25 mg/kg PCB cleanup standard. Sample location in accordance with TSCA.
B-791	3	PCBs (9078)	Post excavation verification of compliance with 25 mg/kg PCB cleanup standard. Sample location in accordance with TSCA.
B-792	3	PCBs (9078)	Post excavation verification of compliance with 25 mg/kg PCB cleanup standard. Sample location in accordance with TSCA.
B-793	3	PCBs (9078)	Post excavation verification of compliance with 25 mg/kg PCB cleanup standard. Sample location in accordance with TSCA.
B-794	5	PCBs (8082A/3540C)	Post excavation verification of compliance with 1 mg/kg (FEMA Floodway) PCB cleanup standard. Sample location in accordance with TSCA.
B-795	5	PCBs (8082A/3540C)	Post excavation verification of compliance with 1 mg/kg (FEMA Floodway) PCB cleanup standard. Sample location in accordance with TSCA.
B-796	5	PCBs (8082A/3540C)	Post excavation verification of compliance with 1 mg/kg (FEMA Floodway) PCB cleanup standard. Sample location in accordance with TSCA. Field Duplicate, MS/MSD and Equipment Blank for PCBs - 8082A/3540C collected at this location.

Sampling Location/ID Number	Depth (ft)	Analytical Parameter	Rationale
Bottom Samples			
B-797	5	PCBs (8082A/3540C)	Post excavation verification of compliance with 1 mg/kg (FEMA Floodway) PCB cleanup standard. Sample location in accordance with TSCA.
B-798	5	PCBs (8082A/3540C)	Post excavation verification of compliance with 1 mg/kg (FEMA Floodway) PCB cleanup standard. Sample location in accordance with TSCA.
B-799	5	PCBs (8082A/3540C)	Post excavation verification of compliance with 1 mg/kg (FEMA Floodway) PCB cleanup standard. Sample location in accordance with TSCA.
B-800	5	PCBs (8082A/3540C)	Post excavation verification of compliance with 1 mg/kg (FEMA Floodway) PCB cleanup standard. Sample location in accordance with TSCA.
B-801	5	PCBs (8082A/3540C)	Post excavation verification of compliance with 1 mg/kg (FEMA Floodway) PCB cleanup standard. Sample location in accordance with TSCA.
B-802	5	PCBs (8082A/3540C)	Post excavation verification of compliance with 1 mg/kg (FEMA Floodway) PCB cleanup standard. Sample location in accordance with TSCA.
B-803	5	PCBs (8082A/3540C)	Post excavation verification of compliance with 1 mg/kg (FEMA Floodway) PCB cleanup standard. Sample location in accordance with TSCA.
B-804	5	PCBs (8082A/3540C)	Post excavation verification of compliance with 1 mg/kg (FEMA Floodway) PCB cleanup standard. Sample location in accordance with TSCA.
B-805	5	PCBs (8082A/3540C)	Post excavation verification of compliance with 1 mg/kg (FEMA Floodway) PCB cleanup standard. Sample location in accordance with TSCA.
B-806	5	PCBs (8082A/3540C)	Post excavation verification of compliance with 1 mg/kg (FEMA Floodway) PCB cleanup standard. Sample location in accordance with TSCA.
B-807	5	PCBs (8082A/3540C)	Post excavation verification of compliance with 1 mg/kg (FEMA Floodway) PCB cleanup standard. Sample location in accordance with TSCA.
B-808	6	PCBs (8082A/3540C)	Post excavation verification of compliance with 1 mg/kg (FEMA Floodway) PCB cleanup standard. Sample location in accordance with TSCA.
B-809	6	PCBs (8082A/3540C)	Post excavation verification of compliance with 1 mg/kg (FEMA Floodway) PCB cleanup standard. Sample location in accordance with TSCA.
B-810	6	PCBs (8082A/3540C)	Post excavation verification of compliance with 1 mg/kg (FEMA Floodway) PCB cleanup standard. Sample location in accordance with TSCA.

Sampling Location/ID Number	Depth (ft)	Analytical Parameter	Rationale
Bottom Samples			
B-811	6	PCBs (8082A/3540C)	Post excavation verification of compliance with 1 mg/kg (FEMA Floodway) PCB cleanup standard. Sample location in accordance with TSCA.
B-812	6	PCBs (8082A/3540C)	Post excavation verification of compliance with 1 mg/kg (FEMA Floodway) PCB cleanup standard. Sample location in accordance with TSCA.
B-813	6	PCBs (8082A/3540C)	Post excavation verification of compliance with 1 mg/kg (FEMA Floodway) PCB cleanup standard. Sample location in accordance with TSCA.
B-814	6	PCBs (8082A/3540C)	Post excavation verification of compliance with 1 mg/kg (FEMA Floodway) PCB cleanup standard. Sample location in accordance with TSCA.
B-815	6	PCBs (8082A/3540C)	Post excavation verification of compliance with 1 mg/kg (FEMA Floodway) PCB cleanup standard. Sample location in accordance with TSCA.
B-816	6	PCBs (8082A/3540C)	Post excavation verification of compliance with 1 mg/kg (FEMA Floodway) PCB cleanup standard. Sample location in accordance with TSCA. Field Duplicate, MS/MSD and Equipment Blank for PCBs - 8082A/3540C collected at this location.
B-817	6	PCBs (8082A/3540C)	Post excavation verification of compliance with 1 mg/kg (FEMA Floodway) PCB cleanup standard. Sample location in accordance with TSCA.
B-818	6	PCBs (8082A/3540C)	Post excavation verification of compliance with 1 mg/kg (FEMA Floodway) PCB cleanup standard. Sample location in accordance with TSCA.
B-819	6	PCBs (8082A/3540C)	Post excavation verification of compliance with 1 mg/kg (FEMA Floodway) PCB cleanup standard. Sample location in accordance with TSCA.
B-820	6	PCBs (8082A/3540C)	Post excavation verification of compliance with 1 mg/kg (FEMA Floodway) PCB cleanup standard. Sample location in accordance with TSCA.
B-821	6	PCBs (8082A/3540C)	Post excavation verification of compliance with 1 mg/kg (FEMA Floodway) PCB cleanup standard. Sample location in accordance with TSCA.
B-822	2	PCBs (8082A/3540C)	Post excavation verification of compliance with 1 mg/kg (FEMA Floodway) PCB cleanup standard. Sample location in accordance with TSCA.
B-823	2	PCBs (8082A/3540C)	Post excavation verification of compliance with 1 mg/kg (FEMA Floodway) PCB cleanup standard. Sample location in accordance with TSCA.
B-824	2	PCBs (8082A/3540C)	Post excavation verification of compliance with 1 mg/kg (FEMA Floodway) PCB cleanup standard. Sample location in accordance with TSCA.

Sampling Location/ID Number	Depth (ft)	Analytical Parameter	Rationale
Bottom Samples			
B-825	2	PCBs (8082A/3540C)	Post excavation verification of compliance with 1 mg/kg (FEMA Floodway) PCB cleanup standard. Sample location in accordance with TSCA.
B-826	2	PCBs (8082A/3540C)	Post excavation verification of compliance with 1 mg/kg (FEMA Floodway) PCB cleanup standard. Sample location in accordance with TSCA.
B-827	2	PCBs (8082A/3540C)	Post excavation verification of compliance with 1 mg/kg (FEMA Floodway) PCB cleanup standard. Sample location in accordance with TSCA.
B-828	2	PCBs (8082A/3540C)	Post excavation verification of compliance with 1 mg/kg (FEMA Floodway) PCB cleanup standard. Sample location in accordance with TSCA.
B-829	2	PCBs (8082A/3540C)	Post excavation verification of compliance with 1 mg/kg (FEMA Floodway) PCB cleanup standard. Sample location in accordance with TSCA.
B-830	2	PCBs (8082A/3540C)	Post excavation verification of compliance with 1 mg/kg (FEMA Floodway) PCB cleanup standard. Sample location in accordance with TSCA.
B-831	2	PCBs (8082A/3540C)	Post excavation verification of compliance with 1 mg/kg (FEMA Floodway) PCB cleanup standard. Sample location in accordance with TSCA.
B-832	2	PCBs (8082A/3540C)	Post excavation verification of compliance with 1 mg/kg (FEMA Floodway) PCB cleanup standard. Sample location in accordance with TSCA.
B-833	2	PCBs (8082A/3540C)	Post excavation verification of compliance with 1 mg/kg (FEMA Floodway) PCB cleanup standard. Sample location in accordance with TSCA.
B-834	2	PCBs (8082A/3540C)	Post excavation verification of compliance with 1 mg/kg (FEMA Floodway) PCB cleanup standard. Sample location in accordance with TSCA.
B-835	2	PCBs (8082A/3540C)	Post excavation verification of compliance with 1 mg/kg (FEMA Floodway) PCB cleanup standard. Sample location in accordance with TSCA.
B-836	2	PCBs (8082A/3540C)	Post excavation verification of compliance with 1 mg/kg (FEMA Floodway) PCB cleanup standard. Sample location in accordance with TSCA. Field Duplicate, MS/MSD and Equipment Blank for PCBs - 8082A/3540C collected at this location.
B-837	2	PCBs (8082A/3540C)	Post excavation verification of compliance with 1 mg/kg (FEMA Floodway) PCB cleanup standard. Sample location in accordance with TSCA.
B-838	2	PCBs (8082A/3540C)	Post excavation verification of compliance with 1 mg/kg (FEMA Floodway) PCB cleanup standard. Sample location in accordance with TSCA.

Sampling Location/ID Number	Depth (ft)	Analytical Parameter	Rationale
Bottom Samples			
B-839	2	PCBs (8082A/3540C)	Post excavation verification of compliance with 1 mg/kg (FEMA Floodway) PCB cleanup standard. Sample location in accordance with TSCA.
B-840	2	PCBs (8082A/3540C)	Post excavation verification of compliance with 1 mg/kg (FEMA Floodway) PCB cleanup standard. Sample location in accordance with TSCA.
B-841	2	PCBs (8082A/3540C)	Post excavation verification of compliance with 1 mg/kg (FEMA Floodway) PCB cleanup standard. Sample location in accordance with TSCA.
B-842	2	PCBs (8082A/3540C)	Post excavation verification of compliance with 1 mg/kg (FEMA Floodway) PCB cleanup standard. Sample location in accordance with TSCA.
B-843	2	PCBs (8082A/3540C)	Post excavation verification of compliance with 1 mg/kg (FEMA Floodway) PCB cleanup standard. Sample location in accordance with TSCA.
B-844	3	PCBs (9078)	Post excavation verification of compliance with 25 mg/kg PCB cleanup standard. Sample location in accordance with TSCA.
B-845	3	PCBs (9078, 8082A/3540C)	Post excavation verification of compliance with 25 mg/kg PCB cleanup standard. Sample location in accordance with TSCA.
B-846	3	PCBs (9078)	Post excavation verification of compliance with 25 mg/kg PCB cleanup standard. Sample location in accordance with TSCA.
B-847	3	PCBs (9078)	Post excavation verification of compliance with 25 mg/kg PCB cleanup standard. Sample location in accordance with TSCA.
B-848	3	PCBs (9078)	Post excavation verification of compliance with 25 mg/kg PCB cleanup standard. Sample location in accordance with TSCA.
B-849	3	PCBs (9078)	Post excavation verification of compliance with 25 mg/kg PCB cleanup standard. Sample location in accordance with TSCA.
B-850	3	PCBs (9078, 8082A/3540C)	Post excavation verification of compliance with 25 mg/kg PCB cleanup standard. Sample location in accordance with TSCA.
B-851	3	PCBs (9078)	Post excavation verification of compliance with 25 mg/kg PCB cleanup standard. Sample location in accordance with TSCA. Field Duplicate and Equipment Blank for PCBs - 9078 collected from this location.
B-852	3	PCBs (9078)	Post excavation verification of compliance with 25 mg/kg PCB cleanup standard. Sample location in accordance with TSCA.
B-853	3	PCBs (9078)	Post excavation verification of compliance with 25 mg/kg PCB cleanup standard. Sample location in accordance with TSCA.
B-854	3	PCBs (9078)	Post excavation verification of compliance with 25 mg/kg PCB cleanup standard. Sample location in accordance with TSCA.
B-855	3	PCBs (9078, 8082A/3540C)	Post excavation verification of compliance with 25 mg/kg PCB cleanup standard. Sample location in accordance with TSCA.
B-856	3	PCBs (9078)	Post excavation verification of compliance with 25 mg/kg PCB cleanup standard. Sample location in accordance with TSCA.

Sampling Location/ID Number	Depth (ft)	Analytical Parameter	Rationale
Bottom Samples			
B-857	3	PCBs (9078)	Post excavation verification of compliance with 25 mg/kg PCB cleanup standard. Sample location in accordance with TSCA.
B-858	3	PCBs (9078)	Post excavation verification of compliance with 25 mg/kg PCB cleanup standard. Sample location in accordance with TSCA.
B-859	3	PCBs (9078)	Post excavation verification of compliance with 25 mg/kg PCB cleanup standard. Sample location in accordance with TSCA.
B-860	3	PCBs (9078, 8082A/3540C)	Post excavation verification of compliance with 25 mg/kg PCB cleanup standard. Sample location in accordance with TSCA.
B-861	3	PCBs (9078)	Post excavation verification of compliance with 25 mg/kg PCB cleanup standard. Sample location in accordance with TSCA.
B-862	3	PCBs (9078)	Post excavation verification of compliance with 25 mg/kg PCB cleanup standard. Sample location in accordance with TSCA.
B-863	3	PCBs (9078)	Post excavation verification of compliance with 25 mg/kg PCB cleanup standard. Sample location in accordance with TSCA.
B-864	1	PCBs (9078)	Post excavation verification of compliance with 25 mg/kg PCB cleanup standard. Sample location in accordance with TSCA.
B-865	1	PCBs (9078, 8082A/3540C)	Post excavation verification of compliance with 25 mg/kg PCB cleanup standard. Sample location in accordance with TSCA.
B-866	1	PCBs (9078)	Post excavation verification of compliance with 25 mg/kg PCB cleanup standard. Sample location in accordance with TSCA.
B-867	1	PCBs (9078)	Post excavation verification of compliance with 25 mg/kg PCB cleanup standard. Sample location in accordance with TSCA.
B-868	1	PCBs (9078)	Post excavation verification of compliance with 25 mg/kg PCB cleanup standard. Sample location in accordance with TSCA.
B-869	1	PCBs (9078)	Post excavation verification of compliance with 25 mg/kg PCB cleanup standard. Sample location in accordance with TSCA.
B-870	1	PCBs (9078, 8082A/3540C)	Post excavation verification of compliance with 25 mg/kg PCB cleanup standard. Sample location in accordance with TSCA.
B-871	1	PCBs (9078)	Post excavation verification of compliance with 25 mg/kg PCB cleanup standard. Sample location in accordance with TSCA. Field Duplicate and Equipment Blank for PCBs - 9078 collected from this location.
B-872	1	PCBs (9078)	Post excavation verification of compliance with 25 mg/kg PCB cleanup standard. Sample location in accordance with TSCA.
B-873	1	PCBs (9078)	Post excavation verification of compliance with 25 mg/kg PCB cleanup standard. Sample location in accordance with TSCA.
B-874	1	PCBs (9078)	Post excavation verification of compliance with 25 mg/kg PCB cleanup standard. Sample location in accordance with TSCA.
B-875	1	PCBs (9078, 8082A/3540C)	Post excavation verification of compliance with 25 mg/kg PCB cleanup standard. Sample location in accordance with TSCA.
B-876	1	PCBs (9078)	Post excavation verification of compliance with 25 mg/kg PCB cleanup standard. Sample location in accordance with TSCA.

Sampling Location/ID Number	Depth (ft)	Analytical Parameter	Rationale
Bottom Samples			
B-877	1	PCBs (9078)	Post excavation verification of compliance with 25 mg/kg PCB cleanup standard. Sample location in accordance with TSCA.
B-878	1	PCBs (9078)	Post excavation verification of compliance with 25 mg/kg PCB cleanup standard. Sample location in accordance with TSCA.
B-879	1	PCBs (9078)	Post excavation verification of compliance with 25 mg/kg PCB cleanup standard. Sample location in accordance with TSCA.
B-880	1	PCBs (9078, 8082A/3540C)	Post excavation verification of compliance with 25 mg/kg PCB cleanup standard. Sample location in accordance with TSCA.
B-881	1	PCBs (9078)	Post excavation verification of compliance with 25 mg/kg PCB cleanup standard. Sample location in accordance with TSCA.
B-882	1	PCBs (9078)	Post excavation verification of compliance with 25 mg/kg PCB cleanup standard. Sample location in accordance with TSCA.
B-883	1	PCBs (9078)	Post excavation verification of compliance with 25 mg/kg PCB cleanup standard. Sample location in accordance with TSCA.
B-884	1	PCBs (9078)	Post excavation verification of compliance with 25 mg/kg PCB cleanup standard. Sample location in accordance with TSCA.
B-885	1	PCBs (9078, 8082A/3540C)	Post excavation verification of compliance with 25 mg/kg PCB cleanup standard. Sample location in accordance with TSCA.
B-886	1	PCBs (9078)	Post excavation verification of compliance with 25 mg/kg PCB cleanup standard. Sample location in accordance with TSCA.
B-887	1	PCBs (9078)	Post excavation verification of compliance with 25 mg/kg PCB cleanup standard. Sample location in accordance with TSCA.
B-888	1	PCBs (9078)	Post excavation verification of compliance with 25 mg/kg PCB cleanup standard. Sample location in accordance with TSCA.
B-889	1	PCBs (9078)	Post excavation verification of compliance with 25 mg/kg PCB cleanup standard. Sample location in accordance with TSCA.
B-890	1	PCBs (9078, 8082A/3540C)	Post excavation verification of compliance with 25 mg/kg PCB cleanup standard. Sample location in accordance with TSCA.
B-891	1	PCBs (9078)	Post excavation verification of compliance with 25 mg/kg PCB cleanup standard. Sample location in accordance with TSCA. Field Duplicate and Equipment Blank for PCBs - 9078 collected from this location.
B-892	1	PCBs (9078)	Post excavation verification of compliance with 25 mg/kg PCB cleanup standard. Sample location in accordance with TSCA.
B-893	1	PCBs (9078)	Post excavation verification of compliance with 25 mg/kg PCB cleanup standard. Sample location in accordance with TSCA.
B-894	1	PCBs (9078)	Post excavation verification of compliance with 25 mg/kg PCB cleanup standard. Sample location in accordance with TSCA.
B-895	1	PCBs (9078, 8082A/3540C)	Post excavation verification of compliance with 25 mg/kg PCB cleanup standard. Sample location in accordance with TSCA.

Sampling Location/ID Number	Depth (ft)	Analytical Parameter	Rationale
Bottom Samples			
B-896	2	VOCs (8260B), SVOCs (8270C), Pesticides (8081A), PCBs (8082A/3540C), Metals (6010C/7471B), Cyanide (9014)	Sample to verify compliance with RIDEM's Remediation Regulations R-DEC concentrations for surface soils.
B-897	2	VOCs (8260B), SVOCs (8270C), Pesticides (8081A), PCBs (8082A/3540C), Metals (6010C/7471B), Cyanide (9014)	Sample to verify compliance with RIDEM's Remediation Regulations R-DEC concentrations for surface soils. Field Duplicate, MS/MSD and Equipment Blank for PCBs - 8082A/3540C collected at this location.
B-898	2	VOCs (8260B), SVOCs (8270C), Pesticides (8081A), PCBs (8082A/3540C), Metals (6010C/7471B), Cyanide (9014)	Sample to verify compliance with RIDEM's Remediation Regulations R-DEC concentrations for surface soils.
B-899	2	VOCs (8260B), SVOCs (8270C), Pesticides (8081A), PCBs (8082A/3540C), Metals (6010C/7471B), Cyanide (9014)	Sample to verify compliance with RIDEM's Remediation Regulations R-DEC concentrations for surface soils.
B-900	2	VOCs (8260B), SVOCs (8270C), Pesticides (8081A), PCBs (8082A/3540C), Metals (6010C/7471B), Cyanide (9014)	Sample to verify compliance with RIDEM's Remediation Regulations R-DEC concentrations for surface soils.

Sampling Location/ID Number	Depth (ft)	Analytical Parameter	Rationale
Bottom Samples			
B-901	2	VOCs (8260B), SVOCs (8270C), Pesticides (8081A), PCBs (8082A/3540C), Metals (6010C/7471B), Cyanide (9014)	Sample to verify compliance with RIDEM's Remediation Regulations R-DEC concentrations for surface soils.
B-902	2	VOCs (8260B), SVOCs (8270C), Pesticides (8081A), PCBs (8082A), Metals (6010C/7471B), Cyanide (9014)	Sample to verify compliance with RIDEM's Remediation Regulations R-DEC concentrations for surface soils.

Sampling Location/ID Number	Depth (ft)	Analytical Parameter	Rationale
Sidewall Samples			
SW-1	3	PCBs (9078)	Post excavation verification of compliance with 25 mg/kg PCB cleanup standard. Sample location in accordance with TSCA.
SW-2	3	PCBs (9078)	Post excavation verification of compliance with 25 mg/kg PCB cleanup standard. Sample location in accordance with TSCA.
SW-3	3	PCBs (9078)	Post excavation verification of compliance with 25 mg/kg PCB cleanup standard. Sample location in accordance with TSCA.
SW-4	3	PCBs (9078)	Post excavation verification of compliance with 25 mg/kg PCB cleanup standard. Sample location in accordance with TSCA.
SW-5	3	PCBs (9078, 8082A/3540C)	Post excavation verification of compliance with 25 mg/kg PCB cleanup standard. Sample location in accordance with TSCA.
SW-6	3	PCBs (9078)	Post excavation verification of compliance with 25 mg/kg PCB cleanup standard. Sample location in accordance with TSCA.
SW-7	3	PCBs (9078)	Post excavation verification of compliance with 25 mg/kg PCB cleanup standard. Sample location in accordance with TSCA.
SW-8	3	PCBs (9078)	Post excavation verification of compliance with 25 mg/kg PCB cleanup standard. Sample location in accordance with TSCA.
SW-9	3	PCBs (9078)	Post excavation verification of compliance with 25 mg/kg PCB cleanup standard. Sample location in accordance with TSCA.
SW-10	3	PCBs (9078, 8082A/3540C)	Post excavation verification of compliance with 25 mg/kg PCB cleanup standard. Sample location in accordance with TSCA.
SW-11	3	PCBs (9078)	Post excavation verification of compliance with 25 mg/kg PCB cleanup standard. Sample location in accordance with TSCA.
SW-12	3	PCBs (9078)	Post excavation verification of compliance with 25 mg/kg PCB cleanup standard. Sample location in accordance with TSCA.
SW-13	3	PCBs (9078)	Post excavation verification of compliance with 25 mg/kg PCB cleanup standard. Sample location in accordance with TSCA.
SW-14	3	PCBs (9078)	Post excavation verification of compliance with 25 mg/kg PCB cleanup standard. Sample location in accordance with TSCA.

Sampling Location/ID Number	Depth (ft)	Analytical Parameter	Rationale
Sidewall Samples			
SW-15	3	PCBs (9078, 8082A/3540C)	Post excavation verification of compliance with 25 mg/kg PCB cleanup standard. Sample location in accordance with TSCA.
SW-16	3	PCBs (9078)	Post excavation verification of compliance with 25 mg/kg PCB cleanup standard. Sample location in accordance with TSCA.
SW-17	3	PCBs (9078)	Post excavation verification of compliance with 25 mg/kg PCB cleanup standard. Sample location in accordance with TSCA.
SW-18	3	PCBs (9078)	Post excavation verification of compliance with 25 mg/kg PCB cleanup standard. Sample location in accordance with TSCA.
SW-19	3	PCBs (9078)	Post excavation verification of compliance with 25 mg/kg PCB cleanup standard. Sample location in accordance with TSCA.
SW-20	3	PCBs (9078, 8082A/3540C)	Post excavation verification of compliance with 25 mg/kg PCB cleanup standard. Sample location in accordance with TSCA. Field Duplicate and Equipment Blank for PCBs - 9078 collected from this location.
SW-21	3	PCBs (9078)	Post excavation verification of compliance with 25 mg/kg PCB cleanup standard. Sample location in accordance with TSCA.
SW-22	3	PCBs (9078)	Post excavation verification of compliance with 25 mg/kg PCB cleanup standard. Sample location in accordance with TSCA.
SW-23	3	PCBs (9078)	Post excavation verification of compliance with 25 mg/kg PCB cleanup standard. Sample location in accordance with TSCA.
SW-24	3	PCBs (9078)	Post excavation verification of compliance with 25 mg/kg PCB cleanup standard. Sample location in accordance with TSCA.
SW-25	4	PCBs (9078, 8082A/3540C)	Post excavation verification of compliance with 25 mg/kg PCB cleanup standard. Sample location in accordance with TSCA.
SW-26	4	PCBs (9078)	Post excavation verification of compliance with 25 mg/kg PCB cleanup standard. Sample location in accordance with TSCA.
SW-27	4	PCBs (9078)	Post excavation verification of compliance with 25 mg/kg PCB cleanup standard. Sample location in accordance with TSCA.
SW-28	4	PCBs (9078)	Post excavation verification of compliance with 25 mg/kg PCB cleanup standard. Sample location in accordance with TSCA.
SW-29	4	PCBs (9078)	Post excavation verification of compliance with 25 mg/kg PCB cleanup standard. Sample location in accordance with TSCA.
SW-30	4	PCBs (9078, 8082A/3540C)	Post excavation verification of compliance with 25 mg/kg PCB cleanup standard. Sample location in accordance with TSCA.
SW-31	4	PCBs (9078)	Post excavation verification of compliance with 25 mg/kg PCB cleanup standard. Sample location in accordance with TSCA.
SW-32	4	PCBs (9078)	Post excavation verification of compliance with 25 mg/kg PCB cleanup standard. Sample location in accordance with TSCA.

Sampling Location/ID Number	Depth (ft)	Analytical Parameter	Rationale
Sidewall Samples			
SW-33	4	PCBs (9078)	Post excavation verification of compliance with 25 mg/kg PCB cleanup standard. Sample location in accordance with TSCA.
SW-34	4	PCBs (9078)	Post excavation verification of compliance with 25 mg/kg PCB cleanup standard. Sample location in accordance with TSCA.
SW-35	4	PCBs (9078, 8082A/3540C)	Post excavation verification of compliance with 25 mg/kg PCB cleanup standard. Sample location in accordance with TSCA.
SW-36	4	PCBs (9078)	Post excavation verification of compliance with 25 mg/kg PCB cleanup standard. Sample location in accordance with TSCA.
SW-37	4	PCBs (9078)	Post excavation verification of compliance with 25 mg/kg PCB cleanup standard. Sample location in accordance with TSCA.
SW-38	2	PCBs (9078)	Post excavation verification of compliance with 25 mg/kg PCB cleanup standard. Sample location in accordance with TSCA.
SW-39	2	PCBs (9078)	Post excavation verification of compliance with 25 mg/kg PCB cleanup standard. Sample location in accordance with TSCA.
SW-40	2	PCBs (9078, 8082A/3540C)	Post excavation verification of compliance with 25 mg/kg PCB cleanup standard. Sample location in accordance with TSCA. Field Duplicate and Equipment Blank for PCBs - 9078 collected from this location.
SW-41	2	PCBs (9078)	Post excavation verification of compliance with 25 mg/kg PCB cleanup standard. Sample location in accordance with TSCA.
SW-42	2	PCBs (9078)	Post excavation verification of compliance with 25 mg/kg PCB cleanup standard. Sample location in accordance with TSCA.
SW-43	2	PCBs (9078)	Post excavation verification of compliance with 25 mg/kg PCB cleanup standard. Sample location in accordance with TSCA.
SW-44	2	PCBs (9078)	Post excavation verification of compliance with 25 mg/kg PCB cleanup standard. Sample location in accordance with TSCA.
SW-45	2	PCBs (9078, 8082A/3540C)	Post excavation verification of compliance with 25 mg/kg PCB cleanup standard. Sample location in accordance with TSCA.
SW-46	2	PCBs (9078)	Post excavation verification of compliance with 25 mg/kg PCB cleanup standard. Sample location in accordance with TSCA.
SW-47	2	PCBs (9078)	Post excavation verification of compliance with 25 mg/kg PCB cleanup standard. Sample location in accordance with TSCA.
SW-48	2	PCBs (9078)	Post excavation verification of compliance with 25 mg/kg PCB cleanup standard. Sample location in accordance with TSCA.
SW-49	2	PCBs (9078)	Post excavation verification of compliance with 25 mg/kg PCB cleanup standard. Sample location in accordance with TSCA.
SW-50	3	PCBs (9078, 8082A/3540C)	Post excavation verification of compliance with 25 mg/kg PCB cleanup standard. Sample location in accordance with TSCA.
SW-51	3	PCBs (9078)	Post excavation verification of compliance with 25 mg/kg PCB cleanup standard. Sample location in accordance with TSCA.
SW-52	3	PCBs (9078)	Post excavation verification of compliance with 25 mg/kg PCB cleanup standard. Sample location in accordance with TSCA.

Sampling Location/ID Number	Depth (ft)	Analytical Parameter	Rationale
Sidewall Samples			
SW-53	3	PCBs (9078)	Post excavation verification of compliance with 25 mg/kg PCB cleanup standard. Sample location in accordance with TSCA.
SW-54	3	PCBs (9078)	Post excavation verification of compliance with 25 mg/kg PCB cleanup standard. Sample location in accordance with TSCA.
SW-55	3	PCBs (9078, 8082A/3540C)	Post excavation verification of compliance with 25 mg/kg PCB cleanup standard. Sample location in accordance with TSCA.
SW-56	3	PCBs (9078)	Post excavation verification of compliance with 25 mg/kg PCB cleanup standard. Sample location in accordance with TSCA.
SW-57	3	PCBs (9078)	Post excavation verification of compliance with 25 mg/kg PCB cleanup standard. Sample location in accordance with TSCA.
SW-58	3	PCBs (9078)	Post excavation verification of compliance with 25 mg/kg PCB cleanup standard. Sample location in accordance with TSCA.
SW-59	3	PCBs (9078)	Post excavation verification of compliance with 25 mg/kg PCB cleanup standard. Sample location in accordance with TSCA.
SW-60	3	PCBs (9078, 8082A/3540C)	Post excavation verification of compliance with 25 mg/kg PCB cleanup standard. Sample location in accordance with TSCA. Field Duplicate and Equipment Blank for PCBs - 9078 collected from this location.
SW-61	3	PCBs (9078)	Post excavation verification of compliance with 25 mg/kg PCB cleanup standard. Sample location in accordance with TSCA.
SW-62	3	PCBs (9078)	Post excavation verification of compliance with 25 mg/kg PCB cleanup standard. Sample location in accordance with TSCA.
SW-63	3	PCBs (9078)	Post excavation verification of compliance with 25 mg/kg PCB cleanup standard. Sample location in accordance with TSCA.
SW-64	6	PCBs (9078)	Post excavation verification of compliance with 25 mg/kg PCB cleanup standard. Sample location in accordance with TSCA.
SW-65	6	PCBs (9078, 8082A/3540C)	Post excavation verification of compliance with 25 mg/kg PCB cleanup standard. Sample location in accordance with TSCA.
SW-66	6	PCBs (9078)	Post excavation verification of compliance with 25 mg/kg PCB cleanup standard. Sample location in accordance with TSCA.
SW-67	6	PCBs (9078)	Post excavation verification of compliance with 25 mg/kg PCB cleanup standard. Sample location in accordance with TSCA.
SW-68	6	PCBs (9078)	Post excavation verification of compliance with 25 mg/kg PCB cleanup standard. Sample location in accordance with TSCA.
SW-69	6	PCBs (9078)	Post excavation verification of compliance with 25 mg/kg PCB cleanup standard. Sample location in accordance with TSCA.
SW-70	6	PCBs (9078, 8082A/3540C)	Post excavation verification of compliance with 25 mg/kg PCB cleanup standard. Sample location in accordance with TSCA.
SW-71	6	PCBs (9078)	Post excavation verification of compliance with 25 mg/kg PCB cleanup standard. Sample location in accordance with TSCA.
SW-72	6	PCBs (9078)	Post excavation verification of compliance with 25 mg/kg PCB cleanup standard. Sample location in accordance with TSCA.

Sampling Location/ID Number	Depth (ft)	Analytical Parameter	Rationale
Sidewall Samples			
SW-73	6	PCBs (9078)	Post excavation verification of compliance with 25 mg/kg PCB cleanup standard. Sample location in accordance with TSCA.
SW-74	6	PCBs (9078)	Post excavation verification of compliance with 25 mg/kg PCB cleanup standard. Sample location in accordance with TSCA.
SW-75	6	PCBs (9078, 8082A/3540C)	Post excavation verification of compliance with 25 mg/kg PCB cleanup standard. Sample location in accordance with TSCA.
SW-76	6	PCBs (9078)	Post excavation verification of compliance with 25 mg/kg PCB cleanup standard. Sample location in accordance with TSCA.
SW-77	6	PCBs (9078)	Post excavation verification of compliance with 25 mg/kg PCB cleanup standard. Sample location in accordance with TSCA.
SW-78	6	PCBs (9078)	Post excavation verification of compliance with 25 mg/kg PCB cleanup standard. Sample location in accordance with TSCA.
SW-79	6	PCBs (9078)	Post excavation verification of compliance with 25 mg/kg PCB cleanup standard. Sample location in accordance with TSCA.
SW-80	6	PCBs (9078, 8082A/3540C)	Post excavation verification of compliance with 25 mg/kg PCB cleanup standard. Sample location in accordance with TSCA. Field Duplicate and Equipment Blank for PCBs - 9078 collected from this location.
SW-81	6	PCBs (9078)	Post excavation verification of compliance with 25 mg/kg PCB cleanup standard. Sample location in accordance with TSCA.
SW-82	2	PCBs (9078)	Post excavation verification of compliance with 25 mg/kg PCB cleanup standard. Sample location in accordance with TSCA.
SW-83	2	PCBs (9078)	Post excavation verification of compliance with 25 mg/kg PCB cleanup standard. Sample location in accordance with TSCA.
SW-84	2	PCBs (9078)	Post excavation verification of compliance with 25 mg/kg PCB cleanup standard. Sample location in accordance with TSCA.
SW-85	2	PCBs (9078, 8082A/3540C)	Post excavation verification of compliance with 25 mg/kg PCB cleanup standard. Sample location in accordance with TSCA.
SW-86	2	PCBs (9078)	Post excavation verification of compliance with 25 mg/kg PCB cleanup standard. Sample location in accordance with TSCA.
SW-87	2	PCBs (9078)	Post excavation verification of compliance with 25 mg/kg PCB cleanup standard. Sample location in accordance with TSCA.
SW-88	2	PCBs (9078)	Post excavation verification of compliance with 25 mg/kg PCB cleanup standard. Sample location in accordance with TSCA.
SW-89	2	PCBs (9078)	Post excavation verification of compliance with 25 mg/kg PCB cleanup standard. Sample location in accordance with TSCA.
SW-90	2	PCBs (9078, 8082A/3540C)	Post excavation verification of compliance with 25 mg/kg PCB cleanup standard. Sample location in accordance with TSCA.
SW-91	2	PCBs (9078)	Post excavation verification of compliance with 25 mg/kg PCB cleanup standard. Sample location in accordance with TSCA.
SW-92	2	PCBs (9078)	Post excavation verification of compliance with 25 mg/kg PCB cleanup standard. Sample location in accordance with TSCA.

Sampling Location/ID Number	Depth (ft)	Analytical Parameter	Rationale
Sidewall Samples			
SW-93	2	PCBs (9078)	Post excavation verification of compliance with 25 mg/kg PCB cleanup standard. Sample location in accordance with TSCA.
SW-94	3	PCBs (9078)	Post excavation verification of compliance with 25 mg/kg PCB cleanup standard. Sample location in accordance with TSCA.
SW-95	3	PCBs (9078, 8082A/3540C)	Post excavation verification of compliance with 25 mg/kg PCB cleanup standard. Sample location in accordance with TSCA.
SW-96	3	PCBs (9078)	Post excavation verification of compliance with 25 mg/kg PCB cleanup standard. Sample location in accordance with TSCA.
SW-97	3	PCBs (9078)	Post excavation verification of compliance with 25 mg/kg PCB cleanup standard. Sample location in accordance with TSCA.
SW-98	3	PCBs (9078)	Post excavation verification of compliance with 25 mg/kg PCB cleanup standard. Sample location in accordance with TSCA.
SW-99	3	PCBs (9078)	Post excavation verification of compliance with 25 mg/kg PCB cleanup standard. Sample location in accordance with TSCA.
SW-100	3	PCBs (9078, 8082A/3540C)	Post excavation verification of compliance with 25 mg/kg PCB cleanup standard. Sample location in accordance with TSCA. Field Duplicate for PCBs - 9078 & 8082A/3540C, MS/MSD for PCBs - 8082A/3540C and Equipment Blank - 9078 & 8082A/3540C collected from this location.
SW-101	3	PCBs (9078)	Post excavation verification of compliance with 25 mg/kg PCB cleanup standard. Sample location in accordance with TSCA.
SW-102	3	PCBs (9078)	Post excavation verification of compliance with 25 mg/kg PCB cleanup standard. Sample location in accordance with TSCA.
SW-103	3	PCBs (9078)	Post excavation verification of compliance with 25 mg/kg PCB cleanup standard. Sample location in accordance with TSCA.
SW-104	3	PCBs (9078)	Post excavation verification of compliance with 25 mg/kg PCB cleanup standard. Sample location in accordance with TSCA.
SW-105	3	PCBs (9078, 8082A/3540C)	Post excavation verification of compliance with 25 mg/kg PCB cleanup standard. Sample location in accordance with TSCA.
SW-106	3	PCBs (9078)	Post excavation verification of compliance with 25 mg/kg PCB cleanup standard. Sample location in accordance with TSCA.
SW-107	3	PCBs (9078)	Post excavation verification of compliance with 25 mg/kg PCB cleanup standard. Sample location in accordance with TSCA.
SW-108	3	PCBs (9078)	Post excavation verification of compliance with 25 mg/kg PCB cleanup standard. Sample location in accordance with TSCA.
SW-109	3	PCBs (9078)	Post excavation verification of compliance with 25 mg/kg PCB cleanup standard. Sample location in accordance with TSCA.
SW-110	3	PCBs (9078, 8082A/3540C)	Post excavation verification of compliance with 25 mg/kg PCB cleanup standard. Sample location in accordance with TSCA.
SW-111	3	PCBs (9078)	Post excavation verification of compliance with 25 mg/kg PCB cleanup standard. Sample location in accordance with TSCA.

Sampling Location/ID Number	Depth (ft)	Analytical Parameter	Rationale
Sidewall Samples			
SW-112	3	PCBs (9078)	Post excavation verification of compliance with 25 mg/kg PCB cleanup standard. Sample location in accordance with TSCA.
SW-113	3	PCBs (9078)	Post excavation verification of compliance with 25 mg/kg PCB cleanup standard. Sample location in accordance with TSCA.
SW-114	7	PCBs (9078)	Post excavation verification of compliance with 25 mg/kg PCB cleanup standard. Sample location in accordance with TSCA.
SW-115	7	PCBs (9078, 8082A/3540C)	Post excavation verification of compliance with 25 mg/kg PCB cleanup standard. Sample location in accordance with TSCA.
SW-116	7	PCBs (9078)	Post excavation verification of compliance with 25 mg/kg PCB cleanup standard. Sample location in accordance with TSCA.
SW-117	7	PCBs (9078)	Post excavation verification of compliance with 25 mg/kg PCB cleanup standard. Sample location in accordance with TSCA.
SW-118	7	PCBs (9078)	Post excavation verification of compliance with 25 mg/kg PCB cleanup standard. Sample location in accordance with TSCA.
SW-119	7	PCBs (9078)	Post excavation verification of compliance with 25 mg/kg PCB cleanup standard. Sample location in accordance with TSCA.
SW-120	7	PCBs (9078, 8082A/3540C)	Post excavation verification of compliance with 25 mg/kg PCB cleanup standard. Sample location in accordance with TSCA. Field Duplicate and Equipment Blank for PCBs - 9078 collected from this location.
SW-121	7	PCBs (9078)	Post excavation verification of compliance with 25 mg/kg PCB cleanup standard. Sample location in accordance with TSCA.
SW-122	7	PCBs (9078)	Post excavation verification of compliance with 25 mg/kg PCB cleanup standard. Sample location in accordance with TSCA.
SW-123	7	PCBs (9078)	Post excavation verification of compliance with 25 mg/kg PCB cleanup standard. Sample location in accordance with TSCA.
SW-124	7	PCBs (9078)	Post excavation verification of compliance with 25 mg/kg PCB cleanup standard. Sample location in accordance with TSCA.
SW-125	7	PCBs (9078, 8082A/3540C)	Post excavation verification of compliance with 25 mg/kg PCB cleanup standard. Sample location in accordance with TSCA.
SW-126	2	PCBs (9078)	Post excavation verification of compliance with 25 mg/kg PCB cleanup standard. Sample location in accordance with TSCA.
SW-127	2	PCBs (9078)	Post excavation verification of compliance with 25 mg/kg PCB cleanup standard. Sample location in accordance with TSCA.
SW-128	2	PCBs (9078)	Post excavation verification of compliance with 25 mg/kg PCB cleanup standard. Sample location in accordance with TSCA.
SW-129	2	PCBs (9078)	Post excavation verification of compliance with 25 mg/kg PCB cleanup standard. Sample location in accordance with TSCA.
SW-130	2	PCBs (9078, 8082A/3540C)	Post excavation verification of compliance with 25 mg/kg PCB cleanup standard. Sample location in accordance with TSCA.
SW-131	2	PCBs (9078)	Post excavation verification of compliance with 25 mg/kg PCB cleanup standard. Sample location in accordance with TSCA.

Sampling Location/ID Number	Depth (ft)	Analytical Parameter	Rationale
Sidewall Samples			
SW-132	2	PCBs (9078)	Post excavation verification of compliance with 25 mg/kg PCB cleanup standard. Sample location in accordance with TSCA.
SW-133	2	PCBs (9078)	Post excavation verification of compliance with 25 mg/kg PCB cleanup standard. Sample location in accordance with TSCA.
SW-134	2	PCBs (9078)	Post excavation verification of compliance with 25 mg/kg PCB cleanup standard. Sample location in accordance with TSCA.
SW-135	2	PCBs (9078, 8082A/3540C)	Post excavation verification of compliance with 25 mg/kg PCB cleanup standard. Sample location in accordance with TSCA.
SW-136	2	PCBs (9078)	Post excavation verification of compliance with 25 mg/kg PCB cleanup standard. Sample location in accordance with TSCA.
SW-137	2	PCBs (9078)	Post excavation verification of compliance with 25 mg/kg PCB cleanup standard. Sample location in accordance with TSCA.
SW-138	2	PCBs (9078)	Post excavation verification of compliance with 25 mg/kg PCB cleanup standard. Sample location in accordance with TSCA.
SW-139	2	PCBs (9078)	Post excavation verification of compliance with 25 mg/kg PCB cleanup standard. Sample location in accordance with TSCA.
SW-140	2	PCBs (9078, 8082A/3540C)	Post excavation verification of compliance with 25 mg/kg PCB cleanup standard. Sample location in accordance with TSCA. Field Duplicate and Equipment Blank for PCBs - 9078 collected from this location.
SW-141	2	PCBs (9078)	Post excavation verification of compliance with 25 mg/kg PCB cleanup standard. Sample location in accordance with TSCA.
SW-142	7	PCBs (9078)	Post excavation verification of compliance with 25 mg/kg PCB cleanup standard. Sample location in accordance with TSCA.
SW-143	7	PCBs (9078)	Post excavation verification of compliance with 25 mg/kg PCB cleanup standard. Sample location in accordance with TSCA.
SW-144	7	PCBs (9078)	Post excavation verification of compliance with 25 mg/kg PCB cleanup standard. Sample location in accordance with TSCA.
SW-145	7	PCBs (9078, 8082A/3540C)	Post excavation verification of compliance with 25 mg/kg PCB cleanup standard. Sample location in accordance with TSCA.
SW-146	7	PCBs (9078)	Post excavation verification of compliance with 25 mg/kg PCB cleanup standard. Sample location in accordance with TSCA.
SW-147	7	PCBs (9078)	Post excavation verification of compliance with 25 mg/kg PCB cleanup standard. Sample location in accordance with TSCA.
SW-148	7	PCBs (9078)	Post excavation verification of compliance with 25 mg/kg PCB cleanup standard. Sample location in accordance with TSCA.
SW-149	7	PCBs (9078)	Post excavation verification of compliance with 25 mg/kg PCB cleanup standard. Sample location in accordance with TSCA.
SW-150	7	PCBs (9078, 8082A/3540C)	Post excavation verification of compliance with 25 mg/kg PCB cleanup standard. Sample location in accordance with TSCA.
SW-151	7	PCBs (9078)	Post excavation verification of compliance with 25 mg/kg PCB cleanup standard. Sample location in accordance with TSCA.

Sampling Location/ID Number	Depth (ft)	Analytical Parameter	Rationale
Sidewall Samples			
SW-152	7	PCBs (9078)	Post excavation verification of compliance with 25 mg/kg PCB cleanup standard. Sample location in accordance with TSCA.
SW-153	7	PCBs (9078)	Post excavation verification of compliance with 25 mg/kg PCB cleanup standard. Sample location in accordance with TSCA.
SW-154	7	PCBs (9078)	Post excavation verification of compliance with 25 mg/kg PCB cleanup standard. Sample location in accordance with TSCA.
SW-155	7	PCBs (9078, 8082A/3540C)	Post excavation verification of compliance with 25 mg/kg PCB cleanup standard. Sample location in accordance with TSCA.
SW-156	7	PCBs (9078)	Post excavation verification of compliance with 25 mg/kg PCB cleanup standard. Sample location in accordance with TSCA.
SW-157	7	PCBs (9078)	Post excavation verification of compliance with 25 mg/kg PCB cleanup standard. Sample location in accordance with TSCA.
SW-158	7	PCBs (9078)	Post excavation verification of compliance with 25 mg/kg PCB cleanup standard. Sample location in accordance with TSCA.
SW-159	7	PCBs (9078)	Post excavation verification of compliance with 25 mg/kg PCB cleanup standard. Sample location in accordance with TSCA.
SW-160	7	PCBs (9078, 8082A/3540C)	Post excavation verification of compliance with 25 mg/kg PCB cleanup standard. Sample location in accordance with TSCA. Field Duplicate and Equipment Blank for PCBs - 9078 collected from this location.
SW-161	7	PCBs (9078)	Post excavation verification of compliance with 25 mg/kg PCB cleanup standard. Sample location in accordance with TSCA.
SW-162	7	PCBs (9078)	Post excavation verification of compliance with 25 mg/kg PCB cleanup standard. Sample location in accordance with TSCA.
SW-163	7	PCBs (9078)	Post excavation verification of compliance with 25 mg/kg PCB cleanup standard. Sample location in accordance with TSCA.
SW-164	7	PCBs (9078)	Post excavation verification of compliance with 25 mg/kg PCB cleanup standard. Sample location in accordance with TSCA.
SW-165	7	PCBs (9078, 8082A/3540C)	Post excavation verification of compliance with 25 mg/kg PCB cleanup standard. Sample location in accordance with TSCA.
SW-166	7	PCBs (9078)	Post excavation verification of compliance with 25 mg/kg PCB cleanup standard. Sample location in accordance with TSCA.
SW-167	7	PCBs (9078)	Post excavation verification of compliance with 25 mg/kg PCB cleanup standard. Sample location in accordance with TSCA.
SW-168	7	PCBs (9078)	Post excavation verification of compliance with 25 mg/kg PCB cleanup standard. Sample location in accordance with TSCA.
SW-169	7	PCBs (9078)	Post excavation verification of compliance with 25 mg/kg PCB cleanup standard. Sample location in accordance with TSCA.
SW-170	7	PCBs (9078, 8082A/3540C)	Post excavation verification of compliance with 25 mg/kg PCB cleanup standard. Sample location in accordance with TSCA.
SW-171	7	PCBs (9078)	Post excavation verification of compliance with 25 mg/kg PCB cleanup standard. Sample location in accordance with TSCA.

Sampling Location/ID Number	Depth (ft)	Analytical Parameter	Rationale
Sidewall Samples			
SW-172	7	PCBs (9078)	Post excavation verification of compliance with 25 mg/kg PCB cleanup standard. Sample location in accordance with TSCA.
SW-173	7	PCBs (9078)	Post excavation verification of compliance with 25 mg/kg PCB cleanup standard. Sample location in accordance with TSCA.
SW-174	7	PCBs (9078)	Post excavation verification of compliance with 25 mg/kg PCB cleanup standard. Sample location in accordance with TSCA.
SW-175	7	PCBs (9078, 8082A/3540C)	Post excavation verification of compliance with 25 mg/kg PCB cleanup standard. Sample location in accordance with TSCA.
SW-176	7	PCBs (9078)	Post excavation verification of compliance with 25 mg/kg PCB cleanup standard. Sample location in accordance with TSCA.
SW-177	7	PCBs (9078)	Post excavation verification of compliance with 25 mg/kg PCB cleanup standard. Sample location in accordance with TSCA.
SW-178	7	PCBs (9078)	Post excavation verification of compliance with 25 mg/kg PCB cleanup standard. Sample location in accordance with TSCA.
SW-179	7	PCBs (9078)	Post excavation verification of compliance with 25 mg/kg PCB cleanup standard. Sample location in accordance with TSCA.
SW-180	7	PCBs (9078, 8082A/3540C)	Post excavation verification of compliance with 25 mg/kg PCB cleanup standard. Sample location in accordance with TSCA. Field Duplicate and Equipment Blank for PCBs - 9078 collected from this location.
SW-181	7	PCBs (9078)	Post excavation verification of compliance with 25 mg/kg PCB cleanup standard. Sample location in accordance with TSCA.
SW-182	7	PCBs (9078)	Post excavation verification of compliance with 25 mg/kg PCB cleanup standard. Sample location in accordance with TSCA.
SW-183	7	PCBs (9078)	Post excavation verification of compliance with 25 mg/kg PCB cleanup standard. Sample location in accordance with TSCA.
SW-184	7	PCBs (9078)	Post excavation verification of compliance with 25 mg/kg PCB cleanup standard. Sample location in accordance with TSCA.
SW-185	7	PCBs (9078, 8082A/3540C)	Post excavation verification of compliance with 25 mg/kg PCB cleanup standard. Sample location in accordance with TSCA.
SW-186	7	PCBs (9078)	Post excavation verification of compliance with 25 mg/kg PCB cleanup standard. Sample location in accordance with TSCA.
SW-187	7	PCBs (9078)	Post excavation verification of compliance with 25 mg/kg PCB cleanup standard. Sample location in accordance with TSCA.
SW-188	7	PCBs (9078)	Post excavation verification of compliance with 25 mg/kg PCB cleanup standard. Sample location in accordance with TSCA.
SW-189	7	PCBs (9078)	Post excavation verification of compliance with 25 mg/kg PCB cleanup standard. Sample location in accordance with TSCA.
SW-190	7	PCBs (9078, 8082A/3540C)	Post excavation verification of compliance with 25 mg/kg PCB cleanup standard. Sample location in accordance with TSCA.
SW-191	7	PCBs (9078)	Post excavation verification of compliance with 25 mg/kg PCB cleanup standard. Sample location in accordance with TSCA.

Sampling Location/ID Number	Depth (ft)	Analytical Parameter	Rationale
Sidewall Samples			
SW-192	7	PCBs (9078)	Post excavation verification of compliance with 25 mg/kg PCB cleanup standard. Sample location in accordance with TSCA.
SW-193	7	PCBs (9078)	Post excavation verification of compliance with 25 mg/kg PCB cleanup standard. Sample location in accordance with TSCA.
SW-194	7	PCBs (9078)	Post excavation verification of compliance with 25 mg/kg PCB cleanup standard. Sample location in accordance with TSCA.
SW-195	7	PCBs (9078, 8082A/3540C)	Post excavation verification of compliance with 25 mg/kg PCB cleanup standard. Sample location in accordance with TSCA.
SW-196	7	PCBs (9078)	Post excavation verification of compliance with 25 mg/kg PCB cleanup standard. Sample location in accordance with TSCA.
SW-197	7	PCBs (9078)	Post excavation verification of compliance with 25 mg/kg PCB cleanup standard. Sample location in accordance with TSCA.
SW-198	7	PCBs (9078)	Post excavation verification of compliance with 25 mg/kg PCB cleanup standard. Sample location in accordance with TSCA.
SW-199	7	PCBs (9078)	Post excavation verification of compliance with 25 mg/kg PCB cleanup standard. Sample location in accordance with TSCA.
SW-200	6	PCBs (9078, 8082A/3540C)	Post excavation verification of compliance with 25 mg/kg PCB cleanup standard. Sample location in accordance with TSCA. Field Duplicate for PCBs - 9078 & 8082A/3540C, MS/MSD for PCBs - 8082A/3540C and Equipment Blank - 9078 & 8082A/3540C collected from this location.
SW-201	6	PCBs (9078, 8082A/3540C)	Post excavation verification of compliance with 25 mg/kg PCB cleanup standard. Sample location in accordance with TSCA.
SW-202	6	PCBs (9078)	Post excavation verification of compliance with 25 mg/kg PCB cleanup standard. Sample location in accordance with TSCA.
SW-203	6	PCBs (9078)	Post excavation verification of compliance with 25 mg/kg PCB cleanup standard. Sample location in accordance with TSCA.
SW-204	6	PCBs (9078)	Post excavation verification of compliance with 25 mg/kg PCB cleanup standard. Sample location in accordance with TSCA.
SW-205	6	PCBs (9078)	Post excavation verification of compliance with 25 mg/kg PCB cleanup standard. Sample location in accordance with TSCA.
SW-206	6	PCBs (9078, 8082A/3540C)	Post excavation verification of compliance with 25 mg/kg PCB cleanup standard. Sample location in accordance with TSCA.
SW-207	6	PCBs (9078)	Post excavation verification of compliance with 25 mg/kg PCB cleanup standard. Sample location in accordance with TSCA.
SW-208	6	PCBs (9078)	Post excavation verification of compliance with 25 mg/kg PCB cleanup standard. Sample location in accordance with TSCA.
SW-209	6	PCBs (9078)	Post excavation verification of compliance with 25 mg/kg PCB cleanup standard. Sample location in accordance with TSCA.
SW-210	6	PCBs (9078)	Post excavation verification of compliance with 25 mg/kg PCB cleanup standard. Sample location in accordance with TSCA.

Sampling Location/ID Number	Depth (ft)	Analytical Parameter	Rationale
Sidewall Samples			
SW-211	2	PCBs (8082A/3540C)	Post excavation verification of compliance with 1 mg/kg (FEMA Floodway) PCB cleanup standard.
SW-212	2	PCBs (8082A/3540C)	Post excavation verification of compliance with 1 mg/kg (FEMA Floodway) PCB cleanup standard.
SW-213	2	PCBs (8082A/3540C)	Post excavation verification of compliance with 1 mg/kg (FEMA Floodway) PCB cleanup standard.
SW-214	2	PCBs (8082A/3540C)	Post excavation verification of compliance with 1 mg/kg (FEMA Floodway) PCB cleanup standard.
SW-215	2	PCBs (8082A/3540C)	Post excavation verification of compliance with 1 mg/kg (FEMA Floodway) PCB cleanup standard.
SW-216	2	PCBs (8082A/3540C)	Post excavation verification of compliance with 1 mg/kg (FEMA Floodway) PCB cleanup standard.
SW-217	2	PCBs (8082A/3540C)	Post excavation verification of compliance with 1 mg/kg (FEMA Floodway) PCB cleanup standard.
SW-218	2	PCBs (8082A/3540C)	Post excavation verification of compliance with 1 mg/kg (FEMA Floodway) PCB cleanup standard.
SW-219	2	PCBs (8082A/3540C)	Post excavation verification of compliance with 1 mg/kg (FEMA Floodway) PCB cleanup standard.
SW-220	2	PCBs (8082A/3540C)	Post excavation verification of compliance with 1 mg/kg (FEMA Floodway) PCB cleanup standard.
SW-221	2	PCBs (8082A/3540C)	Post excavation verification of compliance with 1 mg/kg (FEMA Floodway) PCB cleanup standard.
SW-222	2	PCBs (8082A/3540C)	Post excavation verification of compliance with 1 mg/kg (FEMA Floodway) PCB cleanup standard.
SW-223	2	PCBs (8082A/3540C)	Post excavation verification of compliance with 1 mg/kg (FEMA Floodway) PCB cleanup standard.
SW-224	2	PCBs (8082A/3540C)	Post excavation verification of compliance with 1 mg/kg (FEMA Floodway) PCB cleanup standard.
SW-225	2	PCBs (8082A/3540C)	Post excavation verification of compliance with 1 mg/kg (FEMA Floodway) PCB cleanup standard.
SW-226	2	PCBs (8082A/3540C)	Post excavation verification of compliance with 1 mg/kg (FEMA Floodway) PCB cleanup standard.
SW-227	2	PCBs (8082A/3540C)	Post excavation verification of compliance with 1 mg/kg (FEMA Floodway) PCB cleanup standard.
SW-228	2	PCBs (8082A/3540C)	Post excavation verification of compliance with 1 mg/kg (FEMA Floodway) PCB cleanup standard. Field Duplicate, MS/MSD and Equipment Blank for PCBs - 8082A/3540C collected at this location.
SW-229	2	PCBs (8082A/3540C)	Post excavation verification of compliance with 1 mg/kg (FEMA Floodway) PCB cleanup standard.
SW-230	2	PCBs (8082A/3540C)	Post excavation verification of compliance with 1 mg/kg (FEMA Floodway) PCB cleanup standard.

Sampling Location/ID Number	Depth (ft)	Analytical Parameter	Rationale
Sidewall Samples			
SW-231	2	PCBs (8082A/3540C)	Post excavation verification of compliance with 1 mg/kg (FEMA Floodway) PCB cleanup standard.
SW-232	2	PCBs (8082A/3540C)	Post excavation verification of compliance with 1 mg/kg (FEMA Floodway) PCB cleanup standard.
SW-233	2	PCBs (8082A/3540C)	Post excavation verification of compliance with 1 mg/kg (FEMA Floodway) PCB cleanup standard.
SW-234	2	PCBs (8082A/3540C)	Post excavation verification of compliance with 1 mg/kg (FEMA Floodway) PCB cleanup standard.
SW-235	2	PCBs (8082A/3540C)	Post excavation verification of compliance with 1 mg/kg (FEMA Floodway) PCB cleanup standard.
SW-236	2	PCBs (8082A/3540C)	Post excavation verification of compliance with 1 mg/kg (FEMA Floodway) PCB cleanup standard.
SW-237	2	PCBs (8082A/3540C)	Post excavation verification of compliance with 1 mg/kg (FEMA Floodway) PCB cleanup standard.
SW-238	2	PCBs (8082A/3540C)	Post excavation verification of compliance with 1 mg/kg (FEMA Floodway) PCB cleanup standard.
SW-239	4	PCBs (8082A/3540C)	Post excavation verification of compliance with 1 mg/kg (FEMA Floodway) PCB cleanup standard.
SW-240	4	PCBs (8082A/3540C)	Post excavation verification of compliance with 1 mg/kg (FEMA Floodway) PCB cleanup standard.
SW-241	4	PCBs (8082A/3540C)	Post excavation verification of compliance with 1 mg/kg (FEMA Floodway) PCB cleanup standard.
SW-242	4	PCBs (8082A/3540C)	Post excavation verification of compliance with 1 mg/kg (FEMA Floodway) PCB cleanup standard.
SW-243	4	PCBs (8082A/3540C)	Post excavation verification of compliance with 1 mg/kg (FEMA Floodway) PCB cleanup standard.
SW-244	4	PCBs (8082A/3540C)	Post excavation verification of compliance with 1 mg/kg (FEMA Floodway) PCB cleanup standard.
SW-245	4	PCBs (8082A/3540C)	Post excavation verification of compliance with 1 mg/kg (FEMA Floodway) PCB cleanup standard.
SW-246	4	PCBs (8082A/3540C)	Post excavation verification of compliance with 1 mg/kg (FEMA Floodway) PCB cleanup standard.
SW-247	4	PCBs (8082A/3540C)	Post excavation verification of compliance with 1 mg/kg (FEMA Floodway) PCB cleanup standard.
SW-248	6	PCBs (8082A/3540C)	Post excavation verification of compliance with 1 mg/kg (FEMA Floodway) PCB cleanup standard. Field Duplicate, MS/MSD and Equipment Blank for PCBs - 8082A/3540C collected at this location.
SW-249	6	PCBs (8082A/3540C)	Post excavation verification of compliance with 1 mg/kg (FEMA Floodway) PCB cleanup standard.
SW-250	6	PCBs (8082A/3540C)	Post excavation verification of compliance with 1 mg/kg (FEMA Floodway) PCB cleanup standard.

Sampling Location/ID Number	Depth (ft)	Analytical Parameter	Rationale
Sidewall Samples			
SW-251	6	PCBs (8082A/3540C)	Post excavation verification of compliance with 1 mg/kg (FEMA Floodway) PCB cleanup standard.
SW-252	6	PCBs (8082A/3540C)	Post excavation verification of compliance with 1 mg/kg (FEMA Floodway) PCB cleanup standard.
SW-253	6	PCBs (8082A/3540C)	Post excavation verification of compliance with 1 mg/kg (FEMA Floodway) PCB cleanup standard.
SW-254	6	PCBs (8082A/3540C)	Post excavation verification of compliance with 1 mg/kg (FEMA Floodway) PCB cleanup standard.
SW-255	6	PCBs (8082A/3540C)	Post excavation verification of compliance with 1 mg/kg (FEMA Floodway) PCB cleanup standard.
SW-256	6	PCBs (8082A/3540C)	Post excavation verification of compliance with 1 mg/kg (FEMA Floodway) PCB cleanup standard.
SW-257	6	PCBs (8082A/3540C)	Post excavation verification of compliance with 1 mg/kg (FEMA Floodway) PCB cleanup standard.
SW-258	6	PCBs (8082A/3540C)	Post excavation verification of compliance with 1 mg/kg (FEMA Floodway) PCB cleanup standard.
SW-259	6	PCBs (8082A/3540C)	Post excavation verification of compliance with 1 mg/kg (FEMA Floodway) PCB cleanup standard.
SW-260	6	PCBs (8082A/3540C)	Post excavation verification of compliance with 1 mg/kg (FEMA Floodway) PCB cleanup standard.
SW-261	6	PCBs (8082A/3540C)	Post excavation verification of compliance with 1 mg/kg (FEMA Floodway) PCB cleanup standard.
SW-262	6	PCBs (8082A/3540C)	Post excavation verification of compliance with 1 mg/kg (FEMA Floodway) PCB cleanup standard.
SW-263	6	PCBs (8082A/3540C)	Post excavation verification of compliance with 1 mg/kg (FEMA Floodway) PCB cleanup standard.
SW-264	6	PCBs (8082A/3540C)	Post excavation verification of compliance with 1 mg/kg (FEMA Floodway) PCB cleanup standard.
SW-265	6	PCBs (8082A/3540C)	Post excavation verification of compliance with 1 mg/kg (FEMA Floodway) PCB cleanup standard.
SW-266	6	PCBs (8082A/3540C)	Post excavation verification of compliance with 1 mg/kg (FEMA Floodway) PCB cleanup standard.
SW-267	6	PCBs (8082A/3540C)	Post excavation verification of compliance with 1 mg/kg (FEMA Floodway) PCB cleanup standard.
SW-268	6	PCBs (8082A/3540C)	Post excavation verification of compliance with 1 mg/kg (FEMA Floodway) PCB cleanup standard. Field Duplicate, MS/MSD and Equipment Blank for PCBs - 8082A/3540C collected at this location.
SW-269	6	PCBs (8082A/3540C)	Post excavation verification of compliance with 1 mg/kg (FEMA Floodway) PCB cleanup standard.
SW-270	7	PCBs (9078)	Post excavation verification of compliance with 25 mg/kg PCB cleanup standard. Sample location in accordance with TSCA.

Sampling Location/ID Number	Depth (ft)	Analytical Parameter	Rationale
Sidewall Samples			
SW-271	7	PCBs (9078)	Post excavation verification of compliance with 25 mg/kg PCB cleanup standard. Sample location in accordance with TSCA.
SW-272	7	PCBs (9078)	Post excavation verification of compliance with 25 mg/kg PCB cleanup standard. Sample location in accordance with TSCA.
SW-273	7	PCBs (9078)	Post excavation verification of compliance with 25 mg/kg PCB cleanup standard. Sample location in accordance with TSCA.
SW-274	7	PCBs (9078, 8082A/3540C)	Post excavation verification of compliance with 25 mg/kg PCB cleanup standard. Sample location in accordance with TSCA.
SW-275	7	PCBs (9078)	Post excavation verification of compliance with 25 mg/kg PCB cleanup standard. Sample location in accordance with TSCA.
SW-276	7	PCBs (9078)	Post excavation verification of compliance with 25 mg/kg PCB cleanup standard. Sample location in accordance with TSCA.
SW-277	7	PCBs (9078)	Post excavation verification of compliance with 25 mg/kg PCB cleanup standard. Sample location in accordance with TSCA.
SW-278	7	PCBs (9078)	Post excavation verification of compliance with 25 mg/kg PCB cleanup standard. Sample location in accordance with TSCA.
SW-279	7	PCBs (9078, 8082A/3540C)	Post excavation verification of compliance with 25 mg/kg PCB cleanup standard. Sample location in accordance with TSCA. Field Duplicate and Equipment Blank for PCBs - 9078 collected from this location.
SW-280	7	PCBs (9078)	Post excavation verification of compliance with 25 mg/kg PCB cleanup standard. Sample location in accordance with TSCA.
SW-281	7	PCBs (9078)	Post excavation verification of compliance with 25 mg/kg PCB cleanup standard. Sample location in accordance with TSCA.
SW-282	7	PCBs (9078)	Post excavation verification of compliance with 25 mg/kg PCB cleanup standard. Sample location in accordance with TSCA.
SW-283	7	PCBs (9078)	Post excavation verification of compliance with 25 mg/kg PCB cleanup standard. Sample location in accordance with TSCA.
SW-284	7	PCBs (9078, 8082A/3540C)	Post excavation verification of compliance with 25 mg/kg PCB cleanup standard. Sample location in accordance with TSCA.
SW-285	7	PCBs (9078)	Post excavation verification of compliance with 25 mg/kg PCB cleanup standard. Sample location in accordance with TSCA.
SW-286	7	PCBs (9078)	Post excavation verification of compliance with 25 mg/kg PCB cleanup standard. Sample location in accordance with TSCA.
SW-287	7	PCBs (9078)	Post excavation verification of compliance with 25 mg/kg PCB cleanup standard. Sample location in accordance with TSCA.
SW-288	7	PCBs (9078)	Post excavation verification of compliance with 25 mg/kg PCB cleanup standard. Sample location in accordance with TSCA.
SW-289	7	PCBs (9078, 8082A/3540C)	Post excavation verification of compliance with 25 mg/kg PCB cleanup standard. Sample location in accordance with TSCA.
SW-290	7	PCBs (9078)	Post excavation verification of compliance with 25 mg/kg PCB cleanup standard. Sample location in accordance with TSCA.

Sampling Location/ID Number	Depth (ft)	Analytical Parameter	Rationale
Sidewall Samples			
SW-291	7	PCBs (9078)	Post excavation verification of compliance with 25 mg/kg PCB cleanup standard. Sample location in accordance with TSCA.
SW-292	7	PCBs (9078)	Post excavation verification of compliance with 25 mg/kg PCB cleanup standard. Sample location in accordance with TSCA.
SW-293	7	PCBs (9078)	Post excavation verification of compliance with 25 mg/kg PCB cleanup standard. Sample location in accordance with TSCA.
SW-294	7	PCBs (9078, 8082A/3540C)	Post excavation verification of compliance with 25 mg/kg PCB cleanup standard. Sample location in accordance with TSCA.
SW-295	7	PCBs (9078)	Post excavation verification of compliance with 25 mg/kg PCB cleanup standard. Sample location in accordance with TSCA.
SW-296	7	PCBs (9078)	Post excavation verification of compliance with 25 mg/kg PCB cleanup standard. Sample location in accordance with TSCA.
SW-297	7	PCBs (9078)	Post excavation verification of compliance with 25 mg/kg PCB cleanup standard. Sample location in accordance with TSCA.
SW-298	7	PCBs (9078)	Post excavation verification of compliance with 25 mg/kg PCB cleanup standard. Sample location in accordance with TSCA.
SW-299	7	PCBs (9078, 8082A/3540C)	Post excavation verification of compliance with 25 mg/kg PCB cleanup standard. Sample location in accordance with TSCA. Field Duplicate and Equipment Blank for PCBs - 9078 collected from this location.
SW-300	7	PCBs (9078)	Post excavation verification of compliance with 25 mg/kg PCB cleanup standard. Sample location in accordance with TSCA.
SW-301	7	PCBs (9078)	Post excavation verification of compliance with 25 mg/kg PCB cleanup standard. Sample location in accordance with TSCA.
SW-302	2	PCBs (9078)	Post excavation verification of compliance with 25 mg/kg PCB cleanup standard. Sample location in accordance with TSCA.
SW-303	2	PCBs (9078)	Post excavation verification of compliance with 25 mg/kg PCB cleanup standard. Sample location in accordance with TSCA.
SW-304	2	PCBs (9078, 8082A/3540C)	Post excavation verification of compliance with 25 mg/kg PCB cleanup standard. Sample location in accordance with TSCA.
SW-305	2	PCBs (9078)	Post excavation verification of compliance with 25 mg/kg PCB cleanup standard. Sample location in accordance with TSCA.
SW-306	2	PCBs (9078)	Post excavation verification of compliance with 25 mg/kg PCB cleanup standard. Sample location in accordance with TSCA.
SW-307	2	PCBs (9078)	Post excavation verification of compliance with 25 mg/kg PCB cleanup standard. Sample location in accordance with TSCA.
SW-308	2	PCBs (9078)	Post excavation verification of compliance with 25 mg/kg PCB cleanup standard. Sample location in accordance with TSCA.
SW-309	2	PCBs (9078, 8082A/3540C)	Post excavation verification of compliance with 25 mg/kg PCB cleanup standard. Sample location in accordance with TSCA.
SW-310	2	PCBs (9078)	Post excavation verification of compliance with 25 mg/kg PCB cleanup standard. Sample location in accordance with TSCA.

Sampling Location/ID Number	Depth (ft)	Analytical Parameter	Rationale
Sidewall Samples			
SW-311	2	PCBs (9078)	Post excavation verification of compliance with 25 mg/kg PCB cleanup standard. Sample location in accordance with TSCA.
SW-312	2	PCBs (9078)	Post excavation verification of compliance with 25 mg/kg PCB cleanup standard. Sample location in accordance with TSCA.
SW-313	2	PCBs (9078)	Post excavation verification of compliance with 25 mg/kg PCB cleanup standard. Sample location in accordance with TSCA.
SW-314	2	PCBs (9078, 8082A/3540C)	Post excavation verification of compliance with 25 mg/kg PCB cleanup standard. Sample location in accordance with TSCA.
SW-315	2	PCBs (9078)	Post excavation verification of compliance with 25 mg/kg PCB cleanup standard. Sample location in accordance with TSCA.
SW-316	2	PCBs (9078)	Post excavation verification of compliance with 25 mg/kg PCB cleanup standard. Sample location in accordance with TSCA.
SW-317	2	PCBs (9078)	Post excavation verification of compliance with 25 mg/kg PCB cleanup standard. Sample location in accordance with TSCA.
SW-318	2	PCBs (9078)	Post excavation verification of compliance with 25 mg/kg PCB cleanup standard. Sample location in accordance with TSCA.
SW-319	2	PCBs (9078, 8082A/3540C)	Post excavation verification of compliance with 25 mg/kg PCB cleanup standard. Sample location in accordance with TSCA. Field Duplicate and Equipment Blank for PCBs - 9078 collected from this location.
SW-320	2	PCBs (9078)	Post excavation verification of compliance with 25 mg/kg PCB cleanup standard. Sample location in accordance with TSCA.
SW-321	2	PCBs (9078)	Post excavation verification of compliance with 25 mg/kg PCB cleanup standard. Sample location in accordance with TSCA.
SW-322	2	PCBs (9078)	Post excavation verification of compliance with 25 mg/kg PCB cleanup standard. Sample location in accordance with TSCA.
SW-323	2	PCBs (9078)	Post excavation verification of compliance with 25 mg/kg PCB cleanup standard. Sample location in accordance with TSCA.
SW-324	2	PCBs (9078, 8082A/3540C)	Post excavation verification of compliance with 25 mg/kg PCB cleanup standard. Sample location in accordance with TSCA.
SW-325	2	PCBs (9078)	Post excavation verification of compliance with 25 mg/kg PCB cleanup standard. Sample location in accordance with TSCA.
SW-326	2	PCBs (9078)	Post excavation verification of compliance with 25 mg/kg PCB cleanup standard. Sample location in accordance with TSCA.
SW-327	2	PCBs (9078)	Post excavation verification of compliance with 25 mg/kg PCB cleanup standard. Sample location in accordance with TSCA.
SW-328	2	PCBs (9078)	Post excavation verification of compliance with 25 mg/kg PCB cleanup standard. Sample location in accordance with TSCA.
SW-329	2	PCBs (9078, 8082A/3540C)	Post excavation verification of compliance with 25 mg/kg PCB cleanup standard. Sample location in accordance with TSCA.
SW-330	2	PCBs (9078)	Post excavation verification of compliance with 25 mg/kg PCB cleanup standard. Sample location in accordance with TSCA.

Sampling Location/ID Number	Depth (ft)	Analytical Parameter	Rationale
Sidewall Samples			
SW-331	2	PCBs (9078)	Post excavation verification of compliance with 25 mg/kg PCB cleanup standard. Sample location in accordance with TSCA.
SW-332	2	PCBs (9078)	Post excavation verification of compliance with 25 mg/kg PCB cleanup standard. Sample location in accordance with TSCA.
SW-333	2	PCBs (9078)	Post excavation verification of compliance with 25 mg/kg PCB cleanup standard. Sample location in accordance with TSCA.
SW-334	2	PCBs (9078, 8082A/3540C)	Post excavation verification of compliance with 25 mg/kg PCB cleanup standard. Sample location in accordance with TSCA.
SW-335	2	PCBs (9078)	Post excavation verification of compliance with 25 mg/kg PCB cleanup standard. Sample location in accordance with TSCA.
SW-336	3	PCBs (9078)	Post excavation verification of compliance with 25 mg/kg PCB cleanup standard. Sample location in accordance with TSCA.
SW-337	3	PCBs (9078)	Post excavation verification of compliance with 25 mg/kg PCB cleanup standard. Sample location in accordance with TSCA.
SW-338	3	PCBs (9078)	Post excavation verification of compliance with 25 mg/kg PCB cleanup standard. Sample location in accordance with TSCA.
SW-339	3	PCBs (9078, 8082A/3540C)	Post excavation verification of compliance with 25 mg/kg PCB cleanup standard. Sample location in accordance with TSCA. Field Duplicate and Equipment Blank for PCBs - 9078 collected from this location.
SW-340	7	PCBs (9078)	Post excavation verification of compliance with 25 mg/kg PCB cleanup standard. Sample location in accordance with TSCA.
SW-341	7	PCBs (9078)	Post excavation verification of compliance with 25 mg/kg PCB cleanup standard. Sample location in accordance with TSCA.
SW-342	7	PCBs (9078)	Post excavation verification of compliance with 25 mg/kg PCB cleanup standard. Sample location in accordance with TSCA.
SW-343	7	PCBs (9078)	Post excavation verification of compliance with 25 mg/kg PCB cleanup standard. Sample location in accordance with TSCA.
SW-344	7	PCBs (9078, 8082A/3540C)	Post excavation verification of compliance with 25 mg/kg PCB cleanup standard. Sample location in accordance with TSCA.
SW-345	7	PCBs (9078)	Post excavation verification of compliance with 25 mg/kg PCB cleanup standard. Sample location in accordance with TSCA.
SW-346	7	PCBs (9078)	Post excavation verification of compliance with 25 mg/kg PCB cleanup standard. Sample location in accordance with TSCA.
SW-347	7	PCBs (9078)	Post excavation verification of compliance with 25 mg/kg PCB cleanup standard. Sample location in accordance with TSCA.
SW-348	7	PCBs (9078)	Post excavation verification of compliance with 25 mg/kg PCB cleanup standard. Sample location in accordance with TSCA.
SW-349	7	PCBs (9078, 8082A/3540C)	Post excavation verification of compliance with 25 mg/kg PCB cleanup standard. Sample location in accordance with TSCA.
SW-350	7	PCBs (9078)	Post excavation verification of compliance with 25 mg/kg PCB cleanup standard. Sample location in accordance with TSCA.

Sampling Location/ID Number	Depth (ft)	Analytical Parameter	Rationale
Sidewall Samples			
SW-351	7	PCBs (9078)	Post excavation verification of compliance with 25 mg/kg PCB cleanup standard. Sample location in accordance with TSCA.
SW-352	7	PCBs (9078)	Post excavation verification of compliance with 25 mg/kg PCB cleanup standard. Sample location in accordance with TSCA.
SW-353	7	PCBs (9078)	Post excavation verification of compliance with 25 mg/kg PCB cleanup standard. Sample location in accordance with TSCA.
SW-354	7	PCBs (9078, 8082A/3540C)	Post excavation verification of compliance with 25 mg/kg PCB cleanup standard. Sample location in accordance with TSCA.
SW-355	7	PCBs (9078)	Post excavation verification of compliance with 25 mg/kg PCB cleanup standard. Sample location in accordance with TSCA.
SW-356	7	PCBs (9078)	Post excavation verification of compliance with 25 mg/kg PCB cleanup standard. Sample location in accordance with TSCA.
SW-357	7	PCBs (9078)	Post excavation verification of compliance with 25 mg/kg PCB cleanup standard. Sample location in accordance with TSCA.
SW-358	7	PCBs (9078)	Post excavation verification of compliance with 25 mg/kg PCB cleanup standard. Sample location in accordance with TSCA.
SW-359	7	PCBs (9078, 8082A/3540C)	Post excavation verification of compliance with 25 mg/kg PCB cleanup standard. Sample location in accordance with TSCA. Field Duplicate and Equipment Blank for PCBs - 9078 collected from this location.
SW-360	7	PCBs (9078)	Post excavation verification of compliance with 25 mg/kg PCB cleanup standard. Sample location in accordance with TSCA.
SW-361	7	PCBs (9078)	Post excavation verification of compliance with 25 mg/kg PCB cleanup standard. Sample location in accordance with TSCA.
SW-362	7	PCBs (9078)	Post excavation verification of compliance with 25 mg/kg PCB cleanup standard. Sample location in accordance with TSCA.
SW-363	7	PCBs (9078)	Post excavation verification of compliance with 25 mg/kg PCB cleanup standard. Sample location in accordance with TSCA.
SW-364	7	PCBs (9078, 8082A/3540C)	Post excavation verification of compliance with 25 mg/kg PCB cleanup standard. Sample location in accordance with TSCA. Field Duplicate for PCBs - 8082A/3540C, MS/MSD for PCBs - 8082A/3540C and Equipment Blank - 8082A/3540C collected from this location.
SW-365	7	PCBs (9078)	Post excavation verification of compliance with 25 mg/kg PCB cleanup standard. Sample location in accordance with TSCA.
SW-366	7	PCBs (9078)	Post excavation verification of compliance with 25 mg/kg PCB cleanup standard. Sample location in accordance with TSCA.
SW-367	7	PCBs (9078)	Post excavation verification of compliance with 25 mg/kg PCB cleanup standard. Sample location in accordance with TSCA.
SW-368	7	PCBs (9078)	Post excavation verification of compliance with 25 mg/kg PCB cleanup standard. Sample location in accordance with TSCA.
SW-369	7	PCBs (9078, 8082A/3540C)	Post excavation verification of compliance with 25 mg/kg PCB cleanup standard. Sample location in accordance with TSCA.

Sampling Location/ID Number	Depth (ft)	Analytical Parameter	Rationale
Sidewall Samples			
SW-370	7	PCBs (9078)	Post excavation verification of compliance with 25 mg/kg PCB cleanup standard. Sample location in accordance with TSCA.
SW-371	7	PCBs (9078)	Post excavation verification of compliance with 25 mg/kg PCB cleanup standard. Sample location in accordance with TSCA.
SW-372	7	PCBs (9078)	Post excavation verification of compliance with 25 mg/kg PCB cleanup standard. Sample location in accordance with TSCA.
SW-373	7	PCBs (9078)	Post excavation verification of compliance with 25 mg/kg PCB cleanup standard. Sample location in accordance with TSCA.
SW-374	7	PCBs (9078, 8082A/3540C)	Post excavation verification of compliance with 25 mg/kg PCB cleanup standard. Sample location in accordance with TSCA.
SW-375	7	PCBs (9078)	Post excavation verification of compliance with 25 mg/kg PCB cleanup standard. Sample location in accordance with TSCA.
SW-376	7	PCBs (9078)	Post excavation verification of compliance with 25 mg/kg PCB cleanup standard. Sample location in accordance with TSCA.
SW-377	7	PCBs (9078)	Post excavation verification of compliance with 25 mg/kg PCB cleanup standard. Sample location in accordance with TSCA.
SW-378	7	PCBs (9078)	Post excavation verification of compliance with 25 mg/kg PCB cleanup standard. Sample location in accordance with TSCA.
SW-379	7	PCBs (9078, 8082A/3540C)	Post excavation verification of compliance with 25 mg/kg PCB cleanup standard. Sample location in accordance with TSCA. Field Duplicate and Equipment Blank for PCBs - 9078 collected from this location.
SW-380	7	PCBs (9078)	Post excavation verification of compliance with 25 mg/kg PCB cleanup standard. Sample location in accordance with TSCA.
SW-381	7	PCBs (9078)	Post excavation verification of compliance with 25 mg/kg PCB cleanup standard. Sample location in accordance with TSCA.
SW-382	3	PCBs (9078)	Post excavation verification of compliance with 25 mg/kg PCB cleanup standard. Sample location in accordance with TSCA.
SW-383	3	PCBs (9078)	Post excavation verification of compliance with 25 mg/kg PCB cleanup standard. Sample location in accordance with TSCA.
SW-384	3	PCBs (9078, 8082A/3540C)	Post excavation verification of compliance with 25 mg/kg PCB cleanup standard. Sample location in accordance with TSCA.
SW-385	3	PCBs (9078)	Post excavation verification of compliance with 25 mg/kg PCB cleanup standard. Sample location in accordance with TSCA.
SW-386	3	PCBs (9078)	Post excavation verification of compliance with 25 mg/kg PCB cleanup standard. Sample location in accordance with TSCA.
SW-387	3	PCBs (9078)	Post excavation verification of compliance with 25 mg/kg PCB cleanup standard. Sample location in accordance with TSCA.
SW-388	3	PCBs (9078)	Post excavation verification of compliance with 25 mg/kg PCB cleanup standard. Sample location in accordance with TSCA.
SW-389	3	PCBs (9078, 8082A/3540C)	Post excavation verification of compliance with 25 mg/kg PCB cleanup standard. Sample location in accordance with TSCA.

Sampling Location/ID Number	Depth (ft)	Analytical Parameter	Rationale
Sidewall Samples			
SW-390	3	PCBs (9078)	Post excavation verification of compliance with 25 mg/kg PCB cleanup standard. Sample location in accordance with TSCA.
SW-391	3	PCBs (9078)	Post excavation verification of compliance with 25 mg/kg PCB cleanup standard. Sample location in accordance with TSCA.
SW-392	3	PCBs (9078)	Post excavation verification of compliance with 25 mg/kg PCB cleanup standard. Sample location in accordance with TSCA.
SW-393	3	PCBs (9078)	Post excavation verification of compliance with 25 mg/kg PCB cleanup standard. Sample location in accordance with TSCA.
SW-394	3	PCBs (9078, 8082A/3540C)	Post excavation verification of compliance with 25 mg/kg PCB cleanup standard. Sample location in accordance with TSCA.
SW-395	3	PCBs (9078)	Post excavation verification of compliance with 25 mg/kg PCB cleanup standard. Sample location in accordance with TSCA.
SW-396	3	PCBs (9078)	Post excavation verification of compliance with 25 mg/kg PCB cleanup standard. Sample location in accordance with TSCA.
SW-397	3	PCBs (9078)	Post excavation verification of compliance with 25 mg/kg PCB cleanup standard. Sample location in accordance with TSCA.
SW-398	3	PCBs (9078)	Post excavation verification of compliance with 25 mg/kg PCB cleanup standard. Sample location in accordance with TSCA.
SW-399	3	PCBs (9078, 8082A/3540C)	Post excavation verification of compliance with 25 mg/kg PCB cleanup standard. Sample location in accordance with TSCA. Field Duplicate and Equipment Blank for PCBs - 9078 collected from this location.
SW-400	3	PCBs (9078)	Post excavation verification of compliance with 25 mg/kg PCB cleanup standard. Sample location in accordance with TSCA.
SW-401	3	PCBs (9078)	Post excavation verification of compliance with 25 mg/kg PCB cleanup standard. Sample location in accordance with TSCA.
SW-402	3	PCBs (9078)	Post excavation verification of compliance with 25 mg/kg PCB cleanup standard. Sample location in accordance with TSCA.
SW-403	3	PCBs (9078)	Post excavation verification of compliance with 25 mg/kg PCB cleanup standard. Sample location in accordance with TSCA.
SW-404	3	PCBs (9078, 8082A/3540C)	Post excavation verification of compliance with 25 mg/kg PCB cleanup standard. Sample location in accordance with TSCA.
SW-405	3	PCBs (9078)	Post excavation verification of compliance with 25 mg/kg PCB cleanup standard. Sample location in accordance with TSCA.
SW-406	3	PCBs (9078)	Post excavation verification of compliance with 25 mg/kg PCB cleanup standard. Sample location in accordance with TSCA.
SW-407	3	PCBs (9078)	Post excavation verification of compliance with 25 mg/kg PCB cleanup standard. Sample location in accordance with TSCA.
SW-408	3	PCBs (9078)	Post excavation verification of compliance with 25 mg/kg PCB cleanup standard. Sample location in accordance with TSCA.
SW-409	3	PCBs (9078, 8082A/3540C)	Post excavation verification of compliance with 25 mg/kg PCB cleanup standard. Sample location in accordance with TSCA.

Sampling Location/ID Number	Depth (ft)	Analytical Parameter	Rationale
Sidewall Samples			
SW-410	3	PCBs (9078)	Post excavation verification of compliance with 25 mg/kg PCB cleanup standard. Sample location in accordance with TSCA.
SW-411	3	PCBs (9078)	Post excavation verification of compliance with 25 mg/kg PCB cleanup standard. Sample location in accordance with TSCA.
SW-412	3	PCBs (9078)	Post excavation verification of compliance with 25 mg/kg PCB cleanup standard. Sample location in accordance with TSCA.
SW-413	3	PCBs (9078)	Post excavation verification of compliance with 25 mg/kg PCB cleanup standard. Sample location in accordance with TSCA.
SW-414	3	PCBs (9078, 8082A/3540C)	Post excavation verification of compliance with 25 mg/kg PCB cleanup standard. Sample location in accordance with TSCA.
SW-415	3	PCBs (9078)	Post excavation verification of compliance with 25 mg/kg PCB cleanup standard. Sample location in accordance with TSCA.
SW-416	3	PCBs (9078)	Post excavation verification of compliance with 25 mg/kg PCB cleanup standard. Sample location in accordance with TSCA.
SW-417	3	PCBs (9078)	Post excavation verification of compliance with 25 mg/kg PCB cleanup standard. Sample location in accordance with TSCA.
SW-418	3	PCBs (9078)	Post excavation verification of compliance with 25 mg/kg PCB cleanup standard. Sample location in accordance with TSCA.
SW-419	3	PCBs (9078, 8082A/3540C)	Post excavation verification of compliance with 25 mg/kg PCB cleanup standard. Sample location in accordance with TSCA. Field Duplicate and Equipment Blank for PCBs - 9078 collected from this location.
SW-420	3	PCBs (9078)	Post excavation verification of compliance with 25 mg/kg PCB cleanup standard. Sample location in accordance with TSCA.
SW-421	3	PCBs (9078)	Post excavation verification of compliance with 25 mg/kg PCB cleanup standard. Sample location in accordance with TSCA.
SW-422	3	PCBs (9078)	Post excavation verification of compliance with 25 mg/kg PCB cleanup standard. Sample location in accordance with TSCA.
SW-423	3	PCBs (9078)	Post excavation verification of compliance with 25 mg/kg PCB cleanup standard. Sample location in accordance with TSCA.
SW-424	3	PCBs (9078, 8082A/3540C)	Post excavation verification of compliance with 25 mg/kg PCB cleanup standard. Sample location in accordance with TSCA.
SW-425	3	PCBs (9078)	Post excavation verification of compliance with 25 mg/kg PCB cleanup standard. Sample location in accordance with TSCA.
SW-426	3	PCBs (9078)	Post excavation verification of compliance with 25 mg/kg PCB cleanup standard. Sample location in accordance with TSCA.
SW-427	3	PCBs (9078)	Post excavation verification of compliance with 25 mg/kg PCB cleanup standard. Sample location in accordance with TSCA.
SW-428	3	PCBs (9078)	Post excavation verification of compliance with 25 mg/kg PCB cleanup standard. Sample location in accordance with TSCA.
SW-429	3	PCBs (9078, 8082A/3540C)	Post excavation verification of compliance with 25 mg/kg PCB cleanup standard. Sample location in accordance with TSCA.

Sampling Location/ID Number	Depth (ft)	Analytical Parameter	Rationale
Sidewall Samples			
SW-430	3	PCBs (9078)	Post excavation verification of compliance with 25 mg/kg PCB cleanup standard. Sample location in accordance with TSCA.
SW-431	3	PCBs (9078)	Post excavation verification of compliance with 25 mg/kg PCB cleanup standard. Sample location in accordance with TSCA.
SW-432	3	PCBs (9078)	Post excavation verification of compliance with 25 mg/kg PCB cleanup standard. Sample location in accordance with TSCA.
SW-433	3	PCBs (9078)	Post excavation verification of compliance with 25 mg/kg PCB cleanup standard. Sample location in accordance with TSCA.
SW-434	3	PCBs (9078, 8082A/3540C)	Post excavation verification of compliance with 25 mg/kg PCB cleanup standard. Sample location in accordance with TSCA.
SW-435	3	PCBs (9078)	Post excavation verification of compliance with 25 mg/kg PCB cleanup standard. Sample location in accordance with TSCA.
SW-436	3	PCBs (9078)	Post excavation verification of compliance with 25 mg/kg PCB cleanup standard. Sample location in accordance with TSCA.
SW-437	3	PCBs (9078)	Post excavation verification of compliance with 25 mg/kg PCB cleanup standard. Sample location in accordance with TSCA.
SW-438	3	PCBs (9078)	Post excavation verification of compliance with 25 mg/kg PCB cleanup standard. Sample location in accordance with TSCA.
SW-439	3	PCBs (9078, 8082A/3540C)	Post excavation verification of compliance with 25 mg/kg PCB cleanup standard. Sample location in accordance with TSCA. Field Duplicate and Equipment Blank for PCBs - 9078 collected from this location.
SW-440	3	PCBs (9078)	Post excavation verification of compliance with 25 mg/kg PCB cleanup standard. Sample location in accordance with TSCA.
SW-441	3	PCBs (9078)	Post excavation verification of compliance with 25 mg/kg PCB cleanup standard. Sample location in accordance with TSCA.
SW-442	3	PCBs (9078)	Post excavation verification of compliance with 25 mg/kg PCB cleanup standard. Sample location in accordance with TSCA.
SW-443	3	PCBs (9078)	Post excavation verification of compliance with 25 mg/kg PCB cleanup standard. Sample location in accordance with TSCA.
SW-444	3	PCBs (9078, 8082A/3540C)	Post excavation verification of compliance with 25 mg/kg PCB cleanup standard. Sample location in accordance with TSCA.
SW-445	3	PCBs (9078)	Post excavation verification of compliance with 25 mg/kg PCB cleanup standard. Sample location in accordance with TSCA.
SW-446	3	PCBs (9078)	Post excavation verification of compliance with 25 mg/kg PCB cleanup standard. Sample location in accordance with TSCA.
SW-447	3	PCBs (9078)	Post excavation verification of compliance with 25 mg/kg PCB cleanup standard. Sample location in accordance with TSCA.
SW-448	3	PCBs (9078)	Post excavation verification of compliance with 25 mg/kg PCB cleanup standard. Sample location in accordance with TSCA.
SW-449	3	PCBs (9078, 8082A/3540C)	Post excavation verification of compliance with 25 mg/kg PCB cleanup standard. Sample location in accordance with TSCA.

Sampling Location/ID Number	Depth (ft)	Analytical Parameter	Rationale
Sidewall Samples			
SW-450	3	PCBs (9078)	Post excavation verification of compliance with 25 mg/kg PCB cleanup standard. Sample location in accordance with TSCA.
SW-451	3	PCBs (9078)	Post excavation verification of compliance with 25 mg/kg PCB cleanup standard. Sample location in accordance with TSCA.
SW-452	3	PCBs (9078)	Post excavation verification of compliance with 25 mg/kg PCB cleanup standard. Sample location in accordance with TSCA.
SW-453	3	PCBs (9078)	Post excavation verification of compliance with 25 mg/kg PCB cleanup standard. Sample location in accordance with TSCA.
SW-454	3	PCBs (9078, 8082A/3540C)	Post excavation verification of compliance with 25 mg/kg PCB cleanup standard. Sample location in accordance with TSCA.
SW-455	3	PCBs (9078)	Post excavation verification of compliance with 25 mg/kg PCB cleanup standard. Sample location in accordance with TSCA.
SW-456	3	PCBs (9078)	Post excavation verification of compliance with 25 mg/kg PCB cleanup standard. Sample location in accordance with TSCA.
SW-457	3	PCBs (9078)	Post excavation verification of compliance with 25 mg/kg PCB cleanup standard. Sample location in accordance with TSCA.
SW-458	3	PCBs (9078)	Post excavation verification of compliance with 25 mg/kg PCB cleanup standard. Sample location in accordance with TSCA.
SW-459	3	PCBs (9078, 8082A/3540C)	Post excavation verification of compliance with 25 mg/kg PCB cleanup standard. Sample location in accordance with TSCA. Field Duplicate and Equipment Blank for PCBs - 9078 collected from this location.
SW-460	3	PCBs (9078)	Post excavation verification of compliance with 25 mg/kg PCB cleanup standard. Sample location in accordance with TSCA.
SW-461	3	PCBs (9078)	Post excavation verification of compliance with 25 mg/kg PCB cleanup standard. Sample location in accordance with TSCA.
SW-462	3	PCBs (9078)	Post excavation verification of compliance with 25 mg/kg PCB cleanup standard. Sample location in accordance with TSCA.
SW-463	3	PCBs (9078)	Post excavation verification of compliance with 25 mg/kg PCB cleanup standard. Sample location in accordance with TSCA.
SW-464	2	PCBs (8082A/3540C)	Post excavation verification of compliance with 1 mg/kg (FEMA Floodway) PCB cleanup standard. Field Duplicate, MS/MSD and Equipment Blank for PCBs - 8082A/3540C collected at this location.
SW-465	2	PCBs (8082A/3540C)	Post excavation verification of compliance with 1 mg/kg (FEMA Floodway) PCB cleanup standard.
SW-466	2	PCBs (8082A/3540C)	Post excavation verification of compliance with 1 mg/kg (FEMA Floodway) PCB cleanup standard.
SW-467	2	PCBs (8082A/3540C)	Post excavation verification of compliance with 1 mg/kg (FEMA Floodway) PCB cleanup standard.
SW-468	2	PCBs (8082A/3540C)	Post excavation verification of compliance with 1 mg/kg (FEMA Floodway) PCB cleanup standard.

Sampling Location/ID Number	Depth (ft)	Analytical Parameter	Rationale
Sidewall Samples			
SW-469	2	PCBs (8082A/3540C)	Post excavation verification of compliance with 1 mg/kg (FEMA Floodway) PCB cleanup standard.
SW-470	2	PCBs (8082A/3540C)	Post excavation verification of compliance with 1 mg/kg (FEMA Floodway) PCB cleanup standard.
SW-471	2	PCBs (8082A/3540C)	Post excavation verification of compliance with 1 mg/kg (FEMA Floodway) PCB cleanup standard.
SW-472	2	PCBs (8082A/3540C)	Post excavation verification of compliance with 1 mg/kg (FEMA Floodway) PCB cleanup standard.
SW-473	2	PCBs (8082A/3540C)	Post excavation verification of compliance with 1 mg/kg (FEMA Floodway) PCB cleanup standard.
SW-474	2	PCBs (8082A/3540C)	Post excavation verification of compliance with 1 mg/kg (FEMA Floodway) PCB cleanup standard.
SW-475	2	PCBs (8082A/3540C)	Post excavation verification of compliance with 1 mg/kg (FEMA Floodway) PCB cleanup standard.
SW-476	2	PCBs (8082A/3540C)	Post excavation verification of compliance with 1 mg/kg (FEMA Floodway) PCB cleanup standard.
SW-477	2	PCBs (8082A/3540C)	Post excavation verification of compliance with 1 mg/kg (FEMA Floodway) PCB cleanup standard.
SW-478	2	PCBs (8082A/3540C)	Post excavation verification of compliance with 1 mg/kg (FEMA Floodway) PCB cleanup standard.
SW-479	2	PCBs (8082A/3540C)	Post excavation verification of compliance with 1 mg/kg (FEMA Floodway) PCB cleanup standard.
SW-480	2	PCBs (8082A/3540C)	Post excavation verification of compliance with 1 mg/kg (FEMA Floodway) PCB cleanup standard.
SW-481	2	PCBs (8082A/3540C)	Post excavation verification of compliance with 1 mg/kg (FEMA Floodway) PCB cleanup standard.
SW-482	2	PCBs (8082A/3540C)	Post excavation verification of compliance with 1 mg/kg (FEMA Floodway) PCB cleanup standard.
SW-483	2	PCBs (8082A/3540C)	Post excavation verification of compliance with 1 mg/kg (FEMA Floodway) PCB cleanup standard.
SW-484	2	PCBs (8082A/3540C)	Post excavation verification of compliance with 1 mg/kg (FEMA Floodway) PCB cleanup standard. Field Duplicate, MS/MSD and Equipment Blank for PCBs - 8082A/3540C collected at this location.
SW-485	2	PCBs (8082A/3540C)	Post excavation verification of compliance with 1 mg/kg (FEMA Floodway) PCB cleanup standard.
SW-486	2	PCBs (8082A/3540C)	Post excavation verification of compliance with 1 mg/kg (FEMA Floodway) PCB cleanup standard.
SW-487	2	PCBs (8082A/3540C)	Post excavation verification of compliance with 1 mg/kg (FEMA Floodway) PCB cleanup standard.
SW-488	2	PCBs (8082A/3540C)	Post excavation verification of compliance with 1 mg/kg (FEMA Floodway) PCB cleanup standard.

Sampling Location/ID Number	Depth (ft)	Analytical Parameter	Rationale
Sidewall Samples			
SW-489	4	PCBs (8082A/3540C)	Post excavation verification of compliance with 1 mg/kg (FEMA Floodway) PCB cleanup standard.
SW-490	4	PCBs (8082A/3540C)	Post excavation verification of compliance with 1 mg/kg (FEMA Floodway) PCB cleanup standard.
SW-491	4	PCBs (8082A/3540C)	Post excavation verification of compliance with 1 mg/kg (FEMA Floodway) PCB cleanup standard.
SW-492	4	PCBs (8082A/3540C)	Post excavation verification of compliance with 1 mg/kg (FEMA Floodway) PCB cleanup standard.
SW-493	4	PCBs (8082A/3540C)	Post excavation verification of compliance with 1 mg/kg (FEMA Floodway) PCB cleanup standard.
SW-494	4	PCBs (8082A/3540C)	Post excavation verification of compliance with 1 mg/kg (FEMA Floodway) PCB cleanup standard.
SW-495	4	PCBs (8082A/3540C)	Post excavation verification of compliance with 1 mg/kg (FEMA Floodway) PCB cleanup standard.
SW-496	4	PCBs (8082A/3540C)	Post excavation verification of compliance with 1 mg/kg (FEMA Floodway) PCB cleanup standard.
SW-497	4	PCBs (8082A/3540C)	Post excavation verification of compliance with 1 mg/kg (FEMA Floodway) PCB cleanup standard.
SW-498	4	PCBs (8082A/3540C)	Post excavation verification of compliance with 1 mg/kg (FEMA Floodway) PCB cleanup standard.
SW-499	4	PCBs (8082A/3540C)	Post excavation verification of compliance with 1 mg/kg (FEMA Floodway) PCB cleanup standard.
SW-500	4	PCBs (8082A/3540C)	Post excavation verification of compliance with 1 mg/kg (FEMA Floodway) PCB cleanup standard.
SW-501	4	PCBs (8082A/3540C)	Post excavation verification of compliance with 1 mg/kg (FEMA Floodway) PCB cleanup standard.
SW-502	4	PCBs (8082A/3540C)	Post excavation verification of compliance with 1 mg/kg (FEMA Floodway) PCB cleanup standard.
SW-503	4	PCBs (8082A/3540C)	Post excavation verification of compliance with 1 mg/kg (FEMA Floodway) PCB cleanup standard.
SW-504	4	PCBs (8082A/3540C)	Post excavation verification of compliance with 1 mg/kg (FEMA Floodway) PCB cleanup standard. Field Duplicate, MS/MSD and Equipment Blank for PCBs - 8082A/3540C collected at this location.
SW-505	4	PCBs (8082A/3540C)	Post excavation verification of compliance with 1 mg/kg (FEMA Floodway) PCB cleanup standard.
SW-506	4	PCBs (8082A/3540C)	Post excavation verification of compliance with 1 mg/kg (FEMA Floodway) PCB cleanup standard.
SW-507	4	PCBs (8082A/3540C)	Post excavation verification of compliance with 1 mg/kg (FEMA Floodway) PCB cleanup standard.
SW-508	4	PCBs (8082A/3540C)	Post excavation verification of compliance with 1 mg/kg (FEMA Floodway) PCB cleanup standard.

Sampling Location/ID Number	Depth (ft)	Analytical Parameter	Rationale
Sidewall Samples			
SW-509	4	PCBs (8082A/3540C)	Post excavation verification of compliance with 1 mg/kg (FEMA Floodway) PCB cleanup standard.
SW-510	4	PCBs (8082A/3540C)	Post excavation verification of compliance with 1 mg/kg (FEMA Floodway) PCB cleanup standard.
SW-511	4	PCBs (8082A/3540C)	Post excavation verification of compliance with 1 mg/kg (FEMA Floodway) PCB cleanup standard.
SW-512	4	PCBs (8082A/3540C)	Post excavation verification of compliance with 1 mg/kg (FEMA Floodway) PCB cleanup standard.
SW-513	4	PCBs (8082A/3540C)	Post excavation verification of compliance with 1 mg/kg (FEMA Floodway) PCB cleanup standard.
SW-514	4	PCBs (8082A/3540C)	Post excavation verification of compliance with 1 mg/kg (FEMA Floodway) PCB cleanup standard.
SW-515	4	PCBs (8082A/3540C)	Post excavation verification of compliance with 1 mg/kg (FEMA Floodway) PCB cleanup standard.
SW-516	4	PCBs (8082A/3540C)	Post excavation verification of compliance with 1 mg/kg (FEMA Floodway) PCB cleanup standard.
SW-517	4	PCBs (8082A/3540C)	Post excavation verification of compliance with 1 mg/kg (FEMA Floodway) PCB cleanup standard.
SW-518	4	PCBs (8082A/3540C)	Post excavation verification of compliance with 1 mg/kg (FEMA Floodway) PCB cleanup standard.
SW-519	4	PCBs (8082A/3540C)	Post excavation verification of compliance with 1 mg/kg (FEMA Floodway) PCB cleanup standard.
SW-520	4	PCBs (8082A/3540C)	Post excavation verification of compliance with 1 mg/kg (FEMA Floodway) PCB cleanup standard.
SW-521	4	PCBs (8082A/3540C)	Post excavation verification of compliance with 1 mg/kg (FEMA Floodway) PCB cleanup standard.
SW-522	4	PCBs (8082A/3540C)	Post excavation verification of compliance with 1 mg/kg (FEMA Floodway) PCB cleanup standard.
SW-523	4	PCBs (8082A/3540C)	Post excavation verification of compliance with 1 mg/kg (FEMA Floodway) PCB cleanup standard.
SW-524	4	PCBs (8082A/3540C)	Post excavation verification of compliance with 1 mg/kg (FEMA Floodway) PCB cleanup standard. Field Duplicate, MS/MSD and Equipment Blank for PCBs - 8082A/3540C collected at this location.
SW-525	4	PCBs (8082A/3540C)	Post excavation verification of compliance with 1 mg/kg (FEMA Floodway) PCB cleanup standard.
SW-526	4	PCBs (9078, 8082A/3540C)	Post excavation verification of compliance with 25 mg/kg PCB cleanup standard. Sample location in accordance with TSCA.
SW-527	4	PCBs (9078)	Post excavation verification of compliance with 25 mg/kg PCB cleanup standard. Sample location in accordance with TSCA.
SW-528	4	PCBs (9078)	Post excavation verification of compliance with 25 mg/kg PCB cleanup standard. Sample location in accordance with TSCA.

Sampling Location/ID Number	Depth (ft)	Analytical Parameter	Rationale
Sidewall Samples			
SW-529	4	PCBs (9078)	Post excavation verification of compliance with 25 mg/kg PCB cleanup standard. Sample location in accordance with TSCA.
SW-530	3	PCBs (8082A/3540C)	Post excavation verification of compliance with 1 mg/kg (FEMA Floodway) PCB cleanup standard.
SW-531	3	PCBs (8082A/3540C)	Post excavation verification of compliance with 1 mg/kg (FEMA Floodway) PCB cleanup standard.
SW-532	3	PCBs (8082A/3540C)	Post excavation verification of compliance with 1 mg/kg (FEMA Floodway) PCB cleanup standard.
SW-533	3	PCBs (9078)	Post excavation verification of compliance with 25 mg/kg PCB cleanup standard. Sample location in accordance with TSCA.
SW-534	3	PCBs (9078, 8082A/3540C)	Post excavation verification of compliance with 25 mg/kg PCB cleanup standard. Sample location in accordance with TSCA.
SW-535	3	PCBs (9078)	Post excavation verification of compliance with 25 mg/kg PCB cleanup standard. Sample location in accordance with TSCA.
SW-536	3	PCBs (9078)	Post excavation verification of compliance with 25 mg/kg PCB cleanup standard. Sample location in accordance with TSCA.
SW-537	3	PCBs (9078)	Post excavation verification of compliance with 25 mg/kg PCB cleanup standard. Sample location in accordance with TSCA.
SW-538	3	PCBs (9078)	Post excavation verification of compliance with 25 mg/kg PCB cleanup standard. Sample location in accordance with TSCA.
SW-539	3	PCBs (9078, 8082A/3540C)	Post excavation verification of compliance with 25 mg/kg PCB cleanup standard. Sample location in accordance with TSCA.
SW-540	3	PCBs (9078)	Post excavation verification of compliance with 25 mg/kg PCB cleanup standard. Sample location in accordance with TSCA.
SW-541	3	PCBs (9078)	Post excavation verification of compliance with 25 mg/kg PCB cleanup standard. Sample location in accordance with TSCA.
SW-542	3	PCBs (9078)	Post excavation verification of compliance with 25 mg/kg PCB cleanup standard. Sample location in accordance with TSCA.
SW-543	3	PCBs (9078)	Post excavation verification of compliance with 25 mg/kg PCB cleanup standard. Sample location in accordance with TSCA.
SW-544	3	PCBs (9078, 8082A/3540C)	Post excavation verification of compliance with 25 mg/kg PCB cleanup standard. Sample location in accordance with TSCA. Field Duplicate and Equipment Blank for PCBs - 9078 collected from this location.
SW-545	3	PCBs (9078)	Post excavation verification of compliance with 25 mg/kg PCB cleanup standard. Sample location in accordance with TSCA.
SW-546	3	PCBs (9078)	Post excavation verification of compliance with 25 mg/kg PCB cleanup standard. Sample location in accordance with TSCA.
SW-547	3	PCBs (9078)	Post excavation verification of compliance with 25 mg/kg PCB cleanup standard. Sample location in accordance with TSCA.
SW-548	3	PCBs (9078)	Post excavation verification of compliance with 25 mg/kg PCB cleanup standard. Sample location in accordance with TSCA.

Sampling Location/ID Number	Depth (ft)	Analytical Parameter	Rationale
Sidewall Samples			
SW-549	3	PCBs (9078, 8082A/3540C)	Post excavation verification of compliance with 25 mg/kg PCB cleanup standard. Sample location in accordance with TSCA.
SW-550	3	PCBs (9078)	Post excavation verification of compliance with 25 mg/kg PCB cleanup standard. Sample location in accordance with TSCA.
SW-551	3	PCBs (9078)	Post excavation verification of compliance with 25 mg/kg PCB cleanup standard. Sample location in accordance with TSCA.
SW-552	3	PCBs (9078)	Post excavation verification of compliance with 25 mg/kg PCB cleanup standard. Sample location in accordance with TSCA.
SW-553	3	PCBs (9078)	Post excavation verification of compliance with 25 mg/kg PCB cleanup standard. Sample location in accordance with TSCA.
SW-554	3	PCBs (9078, 8082A/3540C)	Post excavation verification of compliance with 25 mg/kg PCB cleanup standard. Sample location in accordance with TSCA.
SW-555	3	PCBs (9078)	Post excavation verification of compliance with 25 mg/kg PCB cleanup standard. Sample location in accordance with TSCA.
SW-556	3	PCBs (9078)	Post excavation verification of compliance with 25 mg/kg PCB cleanup standard. Sample location in accordance with TSCA.
SW-557	3	PCBs (9078)	Post excavation verification of compliance with 25 mg/kg PCB cleanup standard. Sample location in accordance with TSCA.
SW-558	3	PCBs (9078)	Post excavation verification of compliance with 25 mg/kg PCB cleanup standard. Sample location in accordance with TSCA.
SW-559	3	PCBs (9078, 8082A/3540C)	Post excavation verification of compliance with 25 mg/kg PCB cleanup standard. Sample location in accordance with TSCA.
SW-560	3	PCBs (9078)	Post excavation verification of compliance with 25 mg/kg PCB cleanup standard. Sample location in accordance with TSCA.
SW-561	3	PCBs (9078)	Post excavation verification of compliance with 25 mg/kg PCB cleanup standard. Sample location in accordance with TSCA.
SW-562	3	PCBs (9078)	Post excavation verification of compliance with 25 mg/kg PCB cleanup standard. Sample location in accordance with TSCA.
SW-563	3	PCBs (9078)	Post excavation verification of compliance with 25 mg/kg PCB cleanup standard. Sample location in accordance with TSCA.
SW-564	3	PCBs (9078, 8082A/3540C)	Post excavation verification of compliance with 25 mg/kg PCB cleanup standard. Sample location in accordance with TSCA. Field Duplicate and Equipment Blank for PCBs - 9078 collected from this location.
SW-565	3	PCBs (9078)	Post excavation verification of compliance with 25 mg/kg PCB cleanup standard. Sample location in accordance with TSCA.
SW-566	5	PCBs (9078)	Post excavation verification of compliance with 25 mg/kg PCB cleanup standard. Sample location in accordance with TSCA.
SW-567	5	PCBs (9078)	Post excavation verification of compliance with 25 mg/kg PCB cleanup standard. Sample location in accordance with TSCA.
SW-568	5	PCBs (9078)	Post excavation verification of compliance with 25 mg/kg PCB cleanup standard. Sample location in accordance with TSCA.

Sampling Location/ID Number	Depth (ft)	Analytical Parameter	Rationale
Sidewall Samples			
SW-569	5	PCBs (9078, 8082A/3540C)	Post excavation verification of compliance with 25 mg/kg PCB cleanup standard. Sample location in accordance with TSCA.
SW-570	5	PCBs (9078)	Post excavation verification of compliance with 25 mg/kg PCB cleanup standard. Sample location in accordance with TSCA.
SW-571	5	PCBs (9078)	Post excavation verification of compliance with 25 mg/kg PCB cleanup standard. Sample location in accordance with TSCA.
SW-572	5	PCBs (9078)	Post excavation verification of compliance with 25 mg/kg PCB cleanup standard. Sample location in accordance with TSCA.
SW-573	5	PCBs (9078)	Post excavation verification of compliance with 25 mg/kg PCB cleanup standard. Sample location in accordance with TSCA.
SW-574	5	PCBs (9078, 8082A/3540C)	Post excavation verification of compliance with 25 mg/kg PCB cleanup standard. Sample location in accordance with TSCA.
SW-575	5	PCBs (9078)	Post excavation verification of compliance with 25 mg/kg PCB cleanup standard. Sample location in accordance with TSCA.
SW-576	5	PCBs (9078)	Post excavation verification of compliance with 25 mg/kg PCB cleanup standard. Sample location in accordance with TSCA.
SW-577	5	PCBs (9078)	Post excavation verification of compliance with 25 mg/kg PCB cleanup standard. Sample location in accordance with TSCA.
SW-578	6	PCBs (8082A/3540C)	Post excavation verification of compliance with 1 mg/kg (FEMA Floodway) PCB cleanup standard.
SW-579	6	PCBs (8082A/3540C)	Post excavation verification of compliance with 1 mg/kg (FEMA Floodway) PCB cleanup standard.
SW-580	6	PCBs (8082A/3540C)	Post excavation verification of compliance with 1 mg/kg (FEMA Floodway) PCB cleanup standard.
SW-581	6	PCBs (8082A/3540C)	Post excavation verification of compliance with 1 mg/kg (FEMA Floodway) PCB cleanup standard.
SW-582	2	PCBs (8082A/3540C)	Post excavation verification of compliance with 1 mg/kg (FEMA Floodway) PCB cleanup standard.
SW-583	2	PCBs (8082A/3540C)	Post excavation verification of compliance with 1 mg/kg (FEMA Floodway) PCB cleanup standard. Field Duplicate, MS/MSD and Equipment Blank for PCBs - 8082A/3540C collected at this location.
SW-584	2	PCBs (8082A/3540C)	Post excavation verification of compliance with 1 mg/kg (FEMA Floodway) PCB cleanup standard.
SW-585	2	PCBs (8082A/3540C)	Post excavation verification of compliance with 1 mg/kg (FEMA Floodway) PCB cleanup standard.
SW-586	2	PCBs (8082A/3540C)	Post excavation verification of compliance with 1 mg/kg (FEMA Floodway) PCB cleanup standard.
SW-587	2	PCBs (8082A/3540C)	Post excavation verification of compliance with 1 mg/kg (FEMA Floodway) PCB cleanup standard.
SW-588	2	PCBs (8082A/3540C)	Post excavation verification of compliance with 1 mg/kg (FEMA Floodway) PCB cleanup standard.

Sampling Location/ID Number	Depth (ft)	Analytical Parameter	Rationale
Sidewall Samples			
SW-589	2	PCBs (8082A/3540C)	Post excavation verification of compliance with 1 mg/kg (FEMA Floodway) PCB cleanup standard.
SW-590	2	PCBs (8082A/3540C)	Post excavation verification of compliance with 1 mg/kg (FEMA Floodway) PCB cleanup standard.
SW-591	2	PCBs (8082A/3540C)	Post excavation verification of compliance with 1 mg/kg (FEMA Floodway) PCB cleanup standard.
SW-592	2	PCBs (8082A/3540C)	Post excavation verification of compliance with 1 mg/kg (FEMA Floodway) PCB cleanup standard.
SW-593	2	PCBs (8082A/3540C)	Post excavation verification of compliance with 1 mg/kg (FEMA Floodway) PCB cleanup standard.
SW-594	2	PCBs (8082A/3540C)	Post excavation verification of compliance with 1 mg/kg (FEMA Floodway) PCB cleanup standard.
SW-595	2	PCBs (8082A/3540C)	Post excavation verification of compliance with 1 mg/kg (FEMA Floodway) PCB cleanup standard.
SW-596	2	PCBs (8082A/3540C)	Post excavation verification of compliance with 1 mg/kg (FEMA Floodway) PCB cleanup standard.
SW-597	2	PCBs (8082A/3540C)	Post excavation verification of compliance with 1 mg/kg (FEMA Floodway) PCB cleanup standard.
SW-598	3	PCBs (9078)	Post excavation verification of compliance with 25 mg/kg PCB cleanup standard. Sample location in accordance with TSCA.
SW-599	3	PCBs (9078, 8082A/3540C)	Post excavation verification of compliance with 25 mg/kg PCB cleanup standard. Sample location in accordance with TSCA.
SW-600	3	PCBs (9078)	Post excavation verification of compliance with 25 mg/kg PCB cleanup standard. Sample location in accordance with TSCA.
SW-601	3	PCBs (9078)	Post excavation verification of compliance with 25 mg/kg PCB cleanup standard. Sample location in accordance with TSCA.
SW-602	3	PCBs (9078)	Post excavation verification of compliance with 25 mg/kg PCB cleanup standard. Sample location in accordance with TSCA.
SW-603	3	PCBs (9078)	Post excavation verification of compliance with 25 mg/kg PCB cleanup standard. Sample location in accordance with TSCA.
SW-604	3	PCBs (9078, 8082A/3540C)	Post excavation verification of compliance with 25 mg/kg PCB cleanup standard. Sample location in accordance with TSCA. Field Duplicate and Equipment Blank for PCBs - 9078 collected from this location.
SW-605	3	PCBs (9078)	Post excavation verification of compliance with 25 mg/kg PCB cleanup standard. Sample location in accordance with TSCA.
SW-606	3	PCBs (9078)	Post excavation verification of compliance with 25 mg/kg PCB cleanup standard. Sample location in accordance with TSCA.
SW-607	3	PCBs (9078)	Post excavation verification of compliance with 25 mg/kg PCB cleanup standard. Sample location in accordance with TSCA.
SW-608	3	PCBs (9078)	Post excavation verification of compliance with 25 mg/kg PCB cleanup standard. Sample location in accordance with TSCA.

Sampling Location/ID Number	Depth (ft)	Analytical Parameter	Rationale
Sidewall Samples			
SW-609	3	PCBs (9078, 8082A/3540C)	Post excavation verification of compliance with 25 mg/kg PCB cleanup standard. Sample location in accordance with TSCA.
SW-610	3	PCBs (9078)	Post excavation verification of compliance with 25 mg/kg PCB cleanup standard. Sample location in accordance with TSCA.
SW-611	3	PCBs (9078)	Post excavation verification of compliance with 25 mg/kg PCB cleanup standard. Sample location in accordance with TSCA.
SW-612	3	PCBs (9078)	Post excavation verification of compliance with 25 mg/kg PCB cleanup standard. Sample location in accordance with TSCA.
SW-613	3	PCBs (9078)	Post excavation verification of compliance with 25 mg/kg PCB cleanup standard. Sample location in accordance with TSCA.
SW-614	3	PCBs (9078, 8082A/3540C)	Post excavation verification of compliance with 25 mg/kg PCB cleanup standard. Sample location in accordance with TSCA.
SW-615	3	PCBs (9078)	Post excavation verification of compliance with 25 mg/kg PCB cleanup standard. Sample location in accordance with TSCA.
SW-616	6	PCBs (9078) VOCs (8260B)	Post excavation verification of compliance with 25 mg/kg PCB cleanup standard, 54 mg/kg toluene and 100 mg/kg chlorobenzene VOC cleanup standards.
SW-617	6	PCBs (9078) VOCs (8260B)	Post excavation verification of compliance with 25 mg/kg PCB cleanup standard, 54 mg/kg toluene and 100 mg/kg chlorobenzene VOC cleanup standards.
SW-618	6	PCBs (9078) VOCs (8260B)	Post excavation verification of compliance with 25 mg/kg PCB cleanup standard, 54 mg/kg toluene and 100 mg/kg chlorobenzene VOC cleanup standards.
SW-619	6	PCBs (9078, 8082A/3540C) VOCs (8260B)	Post excavation verification of compliance with 25 mg/kg PCB cleanup standard, 54 mg/kg toluene and 100 mg/kg chlorobenzene VOC cleanup standards.
SW-620	6	PCBs (9078) VOCs (8260B)	Post excavation verification of compliance with 25 mg/kg PCB cleanup standard, 54 mg/kg toluene and 100 mg/kg chlorobenzene VOC cleanup standards.
SW-621	6	PCBs (9078) VOCs (8260B)	Post excavation verification of compliance with 25 mg/kg PCB cleanup standard, 54 mg/kg toluene and 100 mg/kg chlorobenzene VOC cleanup standards.
SW-622	6	PCBs (9078) VOCs (8260B)	Post excavation verification of compliance with 25 mg/kg PCB cleanup standard, 54 mg/kg toluene and 100 mg/kg chlorobenzene VOC cleanup standards.
SW-623	6	PCBs (9078) VOCs (8260B)	Post excavation verification of compliance with 25 mg/kg PCB cleanup standard, 54 mg/kg toluene and 100 mg/kg chlorobenzene VOC cleanup standards.
SW-624	6	PCBs (9078, 8082A/3540C) VOCs (8260B)	Post excavation verification of compliance with 25 mg/kg PCB cleanup standard, 54 mg/kg toluene and 100 mg/kg chlorobenzene VOC cleanup standards. Field Duplicate for PCBs - 9078 and 8082A/3540C, MS/MSD for PCBs - 8082A/3540C and Equipment Blank for PCBs - 9078 and 8082A/3540C collected from this location.

Sampling Location/ID Number	Depth (ft)	Analytical Parameter	Rationale
Sidewall Samples			
SW-625	6	PCBs (9078) VOCs (8260B)	Post excavation verification of compliance with 25 mg/kg PCB cleanup standard, 54 mg/kg toluene and 100 mg/kg chlorobenzene VOC cleanup standards.
SW-626	6	PCBs (9078) VOCs (8260B)	Post excavation verification of compliance with 25 mg/kg PCB cleanup standard, 54 mg/kg toluene and 100 mg/kg chlorobenzene VOC cleanup standards.
SW-627	6	PCBs (9078) VOCs (8260B)	Post excavation verification of compliance with 25 mg/kg PCB cleanup standard, 54 mg/kg toluene and 100 mg/kg chlorobenzene VOC cleanup standards.
SW-628	6	PCBs (9078) VOCs (8260B)	Post excavation verification of compliance with 25 mg/kg PCB cleanup standard, 54 mg/kg toluene and 100 mg/kg chlorobenzene VOC cleanup standards.
SW-629	6	PCBs (9078, 8082A/3540C) VOCs (8260B)	Post excavation verification of compliance with 25 mg/kg PCB cleanup standard, 54 mg/kg toluene and 100 mg/kg chlorobenzene VOC cleanup standards.
SW-630	6	PCBs (9078) VOCs (8260B)	Post excavation verification of compliance with 25 mg/kg PCB cleanup standard, 54 mg/kg toluene and 100 mg/kg chlorobenzene VOC cleanup standards.
SW-631	6	PCBs (9078) VOCs (8260B)	Post excavation verification of compliance with 25 mg/kg PCB cleanup standard, 54 mg/kg toluene and 100 mg/kg chlorobenzene VOC cleanup standards.
SW-632	6	PCBs (9078) VOCs (8260B)	Post excavation verification of compliance with 25 mg/kg PCB cleanup standard, 54 mg/kg toluene and 100 mg/kg chlorobenzene VOC cleanup standards.
SW-633	6	PCBs (9078) VOCs (8260B)	Post excavation verification of compliance with 25 mg/kg PCB cleanup standard, 54 mg/kg toluene and 100 mg/kg chlorobenzene VOC cleanup standards.
SW-634	6	PCBs (9078, 8082A/3540C) VOCs (8260B)	Post excavation verification of compliance with 25 mg/kg PCB cleanup standard, 54 mg/kg toluene and 100 mg/kg chlorobenzene VOC cleanup standards.
SW-635	6	PCBs (9078) VOCs (8260B)	Post excavation verification of compliance with 25 mg/kg PCB cleanup standard, 54 mg/kg toluene and 100 mg/kg chlorobenzene VOC cleanup standards. Field Duplicate, MS/MSD and Equipment Blank for VOCs - 8260B collected from this location.
SW-636	6	PCBs (9078) VOCs (8260B)	Post excavation verification of compliance with 25 mg/kg PCB cleanup standard, 54 mg/kg toluene and 100 mg/kg chlorobenzene VOC cleanup standards.

Table 4-2: Groundwater Sampling Design and Rationale

Sampling Location/ID Number	Analytical Parameter	Rationale
MW-302I	VOCs (8260B)	Evaluate deep groundwater cross-gradient/downgradient to SWMU-11 following treatment.
MW-302S	VOCs (8260B)	Evaluate shallow groundwater cross-gradient/downgradient to SWMU-11 following treatment.
MW-34D	VOCs (8260B)	Evaluate deep groundwater downgradient to SWMU-11 following treatment.
MW-34S	VOCs (8260B)	Evaluate shallow groundwater downgradient to SWMU-11. following treatment.
MW-102D	VOCs (8260B)	Evaluate deep groundwater downgradient to SWMU-11 following treatment.
MW-102S	VOCs (8260B)	Evaluate deep groundwater downgradient to SWMU-11 following treatment.

5.0 REQUEST FOR ANALYSES

The following sections discuss the analytical support for the project: the analyses requested; analytes of concern, turnaround time, available resources and available laboratories.

5.1 Analyses Narrative

Each analytical method to be used to evaluate compliance with the soil and groundwater cleanup standards and DQOs in **Section 3.2** is provided in **Tables 5-1** and **5-2**. The tables include the analytical parameters for each type of sample, QC samples such as blanks, duplicates, splits and laboratory QC.

Tables 5-3 and **5-4** show information on container types, sample volumes, preservatives, special handling and analytical holding times. Rush turnaround times are important for streamlining the project, especially when calibrating the proposed PCB field screening method (L2000DX PCB/Chloride Analyzer, see **Section 6.2**) to analytical laboratory data. Less than one-week rush turnaround times will be utilized for these samples, as well as for the samples collected in the Floodway, which must meet stringent (less than 1 mg/kg PCB standards), too low for the PCB field screening method. Rush turnaround times for samples will be processed only with the direct approval of BASF's Project Manager.

QC samples for laboratory analyses will include field duplicates, matrix spike/matrix spike duplicates (MS/MSDs), equipment blanks, trip blanks, temperature blanks; and Dexsil Screening QC samples. These samples will be collected as described below:

Field Duplicates

Field duplicates will be collected at a frequency of one (1) field duplicate per 20 field samples, per matrix, per sampling technique, including the PCB field screening method. Field duplicates for solid samples will be collected by alternately filling two sets of identical sample containers from the interim container used to homogenize the sample. The soil will be homogenized in a sample-dedicated container (at least one-gallon). Homogenized material from the bucket will then be transferred to the appropriate wide-mouth glass jars for both the regular and duplicate samples. All jars designated for a particular analysis (e.g., semi volatile organic compounds) will be filled sequentially before jars designated for another analysis are filled (e.g., metals).

For soil VOC samples, the field duplicate will be collected using the collection device (e.g., sample coring device) from the same areas as the parent sample (i.e., soil VOC samples are not homogenized). For aqueous samples, the parent sample and field duplicate sample containers will be filled in an alternating fashion (i.e., one parent sample container filled, one field duplicate container filled). All field duplicates will be analyzed for the same parameters as their associated samples.

Duplicate samples will be preserved, packaged, and sealed in the same manner as other samples of the same matrix. A separate sample number and station number will be assigned to

each duplicate, and it will be submitted blind to the laboratory.

MS/MSDs

MS/MSD samples will be collected at a frequency of one (1) for every 20 field samples, per matrix. For those samples designated as MS/MSDs, sufficient additional volume or mass (based on the laboratory's requirements) will be collected.

Equipment Blanks

Equipment blanks will be collected at a rate of one for every 20 field samples, per matrix, per sampling technique. Equipment blanks will be collected by pouring laboratory VOA-free water over the decontaminated sampling equipment, and collecting the rinsate into the appropriate sample containers. Equipment blanks will not be collected when dedicated sampling equipment is used (e.g., peristaltic pump with dedicated tubing).

Trip Blanks

Trip blanks will be included with each shipment of groundwater and soil samples collected for VOC analyses. Trip blanks associated with groundwater samples will originate in the laboratory and will be prepared by filling two 40-mL VOA vials with laboratory VOA-free water and the chemical preservative, and sealing the vials with septum-lined caps (allowing no headspace). Trip blanks associated with soil VOC samples will consist of one set of the soil VOA vials (i.e., two low level VOA vials and one high level VOA vial). Trip blanks will accompany the sample bottles to the site and will remain (unopened) in the shipping container until the sample bottles are received back at the laboratory.

Temperature Blanks

Temperature blanks will be included in each cooler, allowing the laboratory to determine the temperature of the shipment without disturbing the field samples. Temperature blanks will be prepared by filling a plastic or glass vial with water.

Dexsil Screening QC

Periodic checks using laboratory analytical methods for PCBs (i.e., 8082A/3540C Soxhlet Extraction Method) will be used to confirm the Dexsil PCB/Chloride Analyzer methodology and functionality. Field data verification for PCBs in soils will include the collection and analysis of duplicate samples via EPA Method 8082A/3540C at a rate of two (2) samples for every ten (10) samples analyzed by EPA Method 9078. Following the completion of the laboratory analysis of the duplicate PCB samples, these results will be compared to the results obtained in the field via the Dexsil L2000DX PCB/Chloride Analyzer. If the laboratory analytical results are greater than 50% higher than the field screening results (after application of any necessary adjustment factor determined in the initial comparability study, as described in Section 6.2 of this SAP), three additional duplicate samples will be submitted for laboratory analyses from the corresponding group of ten samples the duplicate samples were collected. If satisfactory results are not obtained, or if additional duplicate samples are not available, corrective actions including the collection of additional samples and/or the completion of additional excavation followed by additional sampling and analyses will be completed.

5.2 Analytical Laboratory

Off-site laboratory analyses of soil and groundwater samples will be completed by:

ESS Laboratory
185 Frances Avenue
Cranston, RI 02910
(401) 461-7181

ESS will be used to analyze both soil and groundwater matrices for the analytes listed and discussed in **Tables 5-1** and **5-2**.

ESS has a QC program in place to ensure the reliability and validity of the analysis performed at the laboratory. All analytical procedures are documented in writing as SOPs and each SOP includes the minimum requirements for the procedure. The internal QC checks differ slightly for each individual procedure and are outlined in the SOPs included in Appendix A. In general, they include:

- Blanks (method, reagent/preparation, instrument)
- MS/MSDs
- Surrogate spikes (organic analyses)
- Laboratory duplicates
- LCSs
- Internal standard area counts (gas chromatography/mass spectrometry [GC/MS] analyses)
- Endrin/DDT breakdown check standard results (pesticide and PCB – Aroclors only)
- Calibration check compounds
- Interference checks (ICP analysis)
- Serial dilutions (ICP analysis)
- Individual canister cleaning certification
- The control limits for precision and accuracy will be the laboratory limits current at the time of analyses.

A routinely collected soil sample (a full 8-oz sample jar or two 120-mL sample vials) contains sufficient volume for both routine sample analysis and additional laboratory QC analyses. Therefore, a separate soil sample for laboratory QC purposes will not be collected.

For water samples, double volumes of samples are supplied to the laboratory for its use for QC purposes. Two sets of water sample containers are filled and all containers are labeled with a single sample number.

Routine testing and preventive maintenance is performed by the laboratory as part of their QA program. Details on the type of checks, frequencies, and corrective actions are included in the Laboratory QA Manual.

Supplies and consumables will be checked by AEI personnel upon receipt of each sample equipment/consumables delivery from the laboratory.

Critical Supplies and Consumables	Inspection Requirements and Acceptance Criteria	Responsible Individual
Sample bottles	Visually inspected upon receipt for cracks, breakage, and cleanliness. Must be accompanied by certificate of analysis.	Field Team
Chemicals and reagents	Visually inspected for proper labeling, expiration dates, appropriate grade	Field Team
Sampling equipment	Visually inspected for obvious defects, damage, and contamination	Field Team

Sample equipment/consumables provided by the laboratory not meeting acceptance criteria will initiate the appropriate corrective action. Corrective measures may include repair or replacement of measurement equipment, and/or notification of vendor and subsequent replacement of defective or inappropriate materials. All actions will be documented in the project files. The laboratory system of inspection and acceptance of supplies and consumable is documented in the Laboratory QA Manual.

ESS holds National Environmental Laboratory Accreditation Program (NELAP) accreditation and Rhode Island Department of Health certification, where applicable.

Table 5-1: Soil Analytical Services

Sampling Location/ID Number	Depth (ft)	Special Designation	Analytical Method						
			PCBs (8082A/3540C)	PCBs (9078)	VOCs (8260B)	SVOCs (8270C)	Pesticides (8081A)	Metals (6010C/7471B)	Cyanide (9014)
Bottom Samples									
B-1	1			X					
B-2	1			X					
B-3	1			X					
B-4	1			X					
B-5	3		X	X					
B-6	3			X					
B-7	3			X					
B-8	3			X					
B-9	3			X					
B-10	3		X	X					
B-11	3			X					
B-12	3			X					
B-13	3			X					
B-14	3			X					
B-15	3		X	X					
B-16	3			X					
B-17	3			X					
B-18	3			X					

Sampling Location/ID Number	Depth (ft)	Special Designation	Analytical Method						
			PCBs (8082A/3540C)	PCBs (9078)	VOCs (8260B)	SVOCs (8270C)	Pesticides (8081A)	Metals (6010C/7471B)	Cyanide (9014)
Bottom Samples									
B-19	3			X					
B-20	3	Field Duplicate - 9078 Equipment Blank - 9078	X	X					
B-21	1			X					
B-22	1			X					
B-23	1			X					
B-24	1			X					
B-25	1		X	X					
B-26	1			X					
B-27	1			X					
B-28	1			X					
B-29	1			X					
B-30	1		X	X					
B-31	1			X					
B-32	1			X					
B-33	1			X					
B-34	1			X					
B-35	1		X	X					
B-36	1			X					
B-37	1			X					

Sampling Location/ID Number	Depth (ft)	Special Designation	Analytical Method						
			PCBs (8082A/3540C)	PCBs (9078)	VOCs (8260B)	SVOCs (8270C)	Pesticides (8081A)	Metals (6010C/7471B)	Cyanide (9014)
Bottom Samples									
B-38	1			X					
B-39	1			X					
B-40	1	Field Duplicate - 9078 Equipment Blank - 9078	X	X					
B-41	4			X					
B-42	4			X					
B-43	4			X					
B-44	4			X					
B-45	4		X	X					
B-46	4			X					
B-47	4			X					
B-48	4			X					
B-49	2			X					
B-50	2		X	X					
B-51	2			X					
B-52	2			X					
B-53	2			X					
B-54	2			X					
B-55	2		X	X					
B-56	2			X					

Sampling Location/ID Number	Depth (ft)	Special Designation	Analytical Method						
			PCBs (8082A/3540C)	PCBs (9078)	VOCs (8260B)	SVOCs (8270C)	Pesticides (8081A)	Metals (6010C/7471B)	Cyanide (9014)
Bottom Samples									
B-57	2			X					
B-58	2			X					
B-59	2			X					
B-60	2	Field Duplicate - 9078 Equipment Blank - 9078	X	X					
B-61	2			X					
B-62	2			X					
B-63	2			X					
B-64	2			X					
B-65	1		X	X					
B-66	1			X					
B-67	1			X					
B-68	1			X					
B-69	3			X					
B-70	3		X	X					
B-71	3			X					
B-72	3			X					
B-73	3			X					
B-74	3			X					
B-75	3		X	X					

Sampling Location/ID Number	Depth (ft)	Special Designation	Analytical Method						
			PCBs (8082A/3540C)	PCBs (9078)	VOCs (8260B)	SVOCs (8270C)	Pesticides (8081A)	Metals (6010C/7471B)	Cyanide (9014)
Bottom Samples									
B-76	3			X					
B-77	6			X					
B-78	6			X					
B-79	6			X					
B-80	6	Field Duplicate - 9078 Equipment Blank - 9078	X	X					
B-81	6			X					
B-82	6			X					
B-83	6			X					
B-84	6			X					
B-85	6		X	X					
B-86	6			X					
B-87	6			X					
B-88	6			X					
B-89	6			X					
B-90	6		X	X					
B-91	6			X					
B-92	6			X					

Sampling Location/ID Number	Depth (ft)	Special Designation	Analytical Method						
			PCBs (8082A/3540C)	PCBs (9078)	VOCs (8260B)	SVOCs (8270C)	Pesticides (8081A)	Metals (6010C/7471B)	Cyanide (9014)
Bottom Samples									
B-93	6			X					
B-94	6			X					
B-95	6		X	X					
B-96	6			X					
B-97	2			X					
B-98	2			X					
B-99	2			X					
B-100	2	Field Duplicate - 9078 & 8082A/3540C MS/MSD - 8082A/3540C Equipment Blank - 9078 & 8082A/3540C	X	X					
B-101	2			X					
B-102	2			X					
B-103	2			X					
B-104	2			X					
B-105	2		X	X					
B-106	2			X					
B-107	2			X					

Sampling Location/ID Number	Depth (ft)	Special Designation	Analytical Method						
			PCBs (8082A/3540C)	PCBs (9078)	VOCs (8260B)	SVOCs (8270C)	Pesticides (8081A)	Metals (6010C/7471B)	Cyanide (9014)
Bottom Samples									
B-108	2			X					
B-109	2			X					
B-110	2		X	X					
B-111	2			X					
B-112	2			X					
B-113	3			X					
B-114	3			X					
B-115	3		X	X					
B-116	3			X					
B-117	3			X					
B-118	3			X					
B-119	3			X					
B-120	3	Field Duplicate - 9078 Equipment Blank - 9078	X	X					
B-121	3			X					
B-122	3			X					
B-123	3			X					
B-124	3			X					
B-125	3		X	X					
B-126	3			X					

Sampling Location/ID Number	Depth (ft)	Special Designation	Analytical Method						
			PCBs (8082A/3540C)	PCBs (9078)	VOCs (8260B)	SVOCs (8270C)	Pesticides (8081A)	Metals (6010C/7471B)	Cyanide (9014)
Bottom Samples									
B-127	3			X					
B-128	3			X					
B-129	3			X					
B-130	3		X	X					
B-131	3			X					
B-132	3			X					
B-133	3			X					
B-134	3			X					
B-135	3		X	X					
B-136	3			X					
B-137	3			X					
B-138	3			X					
B-139	3			X					
B-140	3	Field Duplicate - 9078 Equipment Blank - 9078	X	X					
B-141	3			X					
B-142	3			X					
B-143	3			X					
B-144	3			X					
B-145	7		X	X					

Sampling Location/ID Number	Depth (ft)	Special Designation	Analytical Method						
			PCBs (8082A/3540C)	PCBs (9078)	VOCs (8260B)	SVOCs (8270C)	Pesticides (8081A)	Metals (6010C/7471B)	Cyanide (9014)
Bottom Samples									
B-146	7			X					
B-147	7			X					
B-148	7			X					
B-149	7			X					
B-150	7		X	X					
B-151	7			X					
B-152	7			X					
B-153	7			X					
B-154	7			X					
B-155	7		X	X					
B-156	7			X					
B-157	7			X					
B-158	7			X					
B-159	7			X					
B-160	7	Field Duplicate - 9078 Equipment Blank - 9078	X	X					
B-161	2			X					
B-162	2			X					
B-163	2			X					
B-164	2			X					

Sampling Location/ID Number	Depth (ft)	Special Designation	Analytical Method						
			PCBs (8082A/3540C)	PCBs (9078)	VOCs (8260B)	SVOCs (8270C)	Pesticides (8081A)	Metals (6010C/7471B)	Cyanide (9014)
Bottom Samples									
B-165	2		X	X					
B-166	2			X					
B-167	2			X					
B-168	2			X					
B-169	2			X					
B-170	2		X	X					
B-171	2			X					
B-172	2			X					
B-173	2			X					
B-174	2			X					
B-175	2		X	X					
B-176	2			X					
B-177	2			X					
B-178	2			X					
B-179	2			X					
B-180	2	Field Duplicate - 9078 Equipment Blank - 9078	X	X					
B-181	2			X					
B-182	2			X					
B-183	2			X					

Sampling Location/ID Number	Depth (ft)	Special Designation	Analytical Method						
			PCBs (8082A/3540C)	PCBs (9078)	VOCs (8260B)	SVOCs (8270C)	Pesticides (8081A)	Metals (6010C/7471B)	Cyanide (9014)
Bottom Samples									
B-184	2			X					
B-185	2		X	X					
B-186	2			X					
B-187	2			X					
B-188	2			X					
B-189	2			X					
B-190	2		X	X					
B-191	2			X					
B-192	2			X					
B-193	1			X					
B-194	1			X					
B-195	1		X	X					
B-196	1			X					
B-197	1			X					
B-198	1			X					
B-199	1			X					

Sampling Location/ID Number	Depth (ft)	Special Designation	Analytical Method						
			PCBs (8082A/3540C)	PCBs (9078)	VOCs (8260B)	SVOCs (8270C)	Pesticides (8081A)	Metals (6010C/7471B)	Cyanide (9014)
Bottom Samples									
B-200	1	Field Duplicate - 9078 & 8082A/3540C MS/MSD - 8082A/3540C Equipment Blank - 9078 & 8082A/3540C	X	X					
B-201	1			X					
B-202	1			X					
B-203	1			X					
B-204	1			X					
B-205	1		X	X					
B-206	1			X					
B-207	1			X					
B-208	1			X					
B-209	7			X					
B-210	7		X	X					
B-211	7			X					
B-212	7			X					
B-213	7			X					
B-214	7			X					

Sampling Location/ID Number	Depth (ft)	Special Designation	Analytical Method						
			PCBs (8082A/3540C)	PCBs (9078)	VOCs (8260B)	SVOCs (8270C)	Pesticides (8081A)	Metals (6010C/7471B)	Cyanide (9014)
Bottom Samples									
B-215	7		X	X					
B-216	7			X					
B-217	7			X					
B-218	7			X					
B-219	7			X					
B-220	7	Field Duplicate - 9078 Equipment Blank - 9078	X	X					
B-221	7			X					
B-222	7			X					
B-223	7			X					
B-224	7			X					
B-225	7		X	X					
B-226	7			X					
B-227	7			X					
B-228	7			X					
B-229	7			X					
B-230	7		X	X					
B-231	7			X					
B-232	7			X					
B-233	7			X					

Sampling Location/ID Number	Depth (ft)	Special Designation	Analytical Method						
			PCBs (8082A/3540C)	PCBs (9078)	VOCs (8260B)	SVOCs (8270C)	Pesticides (8081A)	Metals (6010C/7471B)	Cyanide (9014)
Bottom Samples									
B-234	7			X					
B-235	7		X	X					
B-236	7			X					
B-237	7			X					
B-238	7			X					
B-239	7			X					
B-240	7	Field Duplicate - 9078 Equipment Blank - 9078	X	X					
B-241	7			X					
B-242	7			X					
B-243	7			X					
B-244	7			X					
B-245	7		X	X					
B-246	7			X					
B-247	7			X					
B-248	7			X					
B-249	7			X					
B-250	7		X	X					
B-251	7			X					
B-252	7			X					

Sampling Location/ID Number	Depth (ft)	Special Designation	Analytical Method						
			PCBs (8082A/3540C)	PCBs (9078)	VOCs (8260B)	SVOCs (8270C)	Pesticides (8081A)	Metals (6010C/7471B)	Cyanide (9014)
Bottom Samples									
B-253	7			X					
B-254	7			X					
B-255	7		X	X					
B-256	7			X					
B-257	6			X					
B-258	6			X					
B-259	6			X					
B-260	6	Field Duplicate - 9078 Equipment Blank - 9078	X	X					
B-261	6			X					
B-262	6			X					
B-263	6			X					
B-264	6			X					
B-265	6		X	X					
B-266	6			X					
B-267	6			X					
B-268	6			X					
B-269	6			X					
B-270	6		X	X					
B-271	2			X					

Sampling Location/ID Number	Depth (ft)	Special Designation	Analytical Method						
			PCBs (8082A/3540C)	PCBs (9078)	VOCs (8260B)	SVOCs (8270C)	Pesticides (8081A)	Metals (6010C/7471B)	Cyanide (9014)
Bottom Samples									
B-272	2			X					
B-273	2			X					
B-274	2			X					
B-275	2		X	X					
B-276	2			X					
B-277	2			X					
B-278	2			X					
B-279	2			X					
B-280	2	Field Duplicate - 9078 Equipment Blank - 9078	X	X					
B-281	2			X					
B-282	2			X					
B-283	2			X					
B-284	2			X					
B-285	2		X	X					
B-286	2			X					
B-287	2			X					
B-288	2			X					
B-289	2			X					
B-290	2		X	X					

Sampling Location/ID Number	Depth (ft)	Special Designation	Analytical Method						
			PCBs (8082A/3540C)	PCBs (9078)	VOCs (8260B)	SVOCs (8270C)	Pesticides (8081A)	Metals (6010C/7471B)	Cyanide (9014)
Bottom Samples									
B-291	2			X					
B-292	2			X					
B-293	2			X					
B-294	2			X					
B-295	2		X	X					
B-296	2			X					
B-297	2			X					
B-298	2			X					
B-299	2			X					
B-300	2	Field Duplicate - 9078 & 8082A/3540C MS/MSD - 8082A/3540C Equipment Blank - 9078 & 8082A/3540C	X	X					
B-301	2			X					
B-302	2			X					
B-303	2			X					
B-304	2			X					
B-305	2		X	X					

Sampling Location/ID Number	Depth (ft)	Special Designation	Analytical Method						
			PCBs (8082A/3540C)	PCBs (9078)	VOCs (8260B)	SVOCs (8270C)	Pesticides (8081A)	Metals (6010C/7471B)	Cyanide (9014)
Bottom Samples									
B-306	2			X					
B-307	2			X					
B-308	2			X					
B-309	2			X					
B-310	2		X	X					
B-311	2			X					
B-312	2			X					
B-313	2			X					
B-314	2			X					
B-315	2		X	X					
B-316	2			X					
B-317	2			X					
B-318	2			X					
B-319	2		X						
B-320	4		X						
B-321	4		X						
B-322	4		X						
B-323	4		X						
B-324	4		X						
B-325	4		X						
B-326	4		X						
B-327	4		X						

Sampling Location/ID Number	Depth (ft)	Special Designation	Analytical Method						
			PCBs (8082A/3540C)	PCBs (9078)	VOCs (8260B)	SVOCs (8270C)	Pesticides (8081A)	Metals (6010C/7471B)	Cyanide (9014)
Bottom Samples									
B-328	6		X						
B-329	6		X						
B-330	6		X						
B-331	6		X						
B-332	6		X						
B-333	6		X						
B-334	6		X						
B-335	6	Field Duplicate/MS/MSD - 8082A/3540C Equipment Blank - 8082A/3540C	X						
B-336	6		X						
B-337	6		X						
B-338	6		X						
B-339	6		X						
B-340	6		X						
B-341	6		X						
B-342	6		X						
B-343	6		X						
B-344	6		X						
B-345	6		X						

Sampling Location/ID Number	Depth (ft)	Special Designation	Analytical Method						
			PCBs (8082A/3540C)	PCBs (9078)	VOCs (8260B)	SVOCs (8270C)	Pesticides (8081A)	Metals (6010C/7471B)	Cyanide (9014)
Bottom Samples									
B-346	6		X						
B-347	6		X						
B-348	6		X						
B-349	6		X						
B-350	6		X						
B-351	6		X						
B-352	6		X						
B-353	6		X						
B-354	6		X						
B-355	6	Field Duplicate/MS/MSD - 8082A/3540C Equipment Blank - 8082A/3540C	X						
B-356	6		X						
B-357	6		X						
B-358	6		X						
B-359	6		X						
B-360	6		X						
B-361	6		X						
B-362	6		X						
B-363	6		X						

Sampling Location/ID Number	Depth (ft)	Special Designation	Analytical Method						
			PCBs (8082A/3540C)	PCBs (9078)	VOCs (8260B)	SVOCs (8270C)	Pesticides (8081A)	Metals (6010C/7471B)	Cyanide (9014)
Bottom Samples									
B-364	6		X						
B-365	6		X						
B-366	6		X						
B-367	6		X						
B-368	6		X						
B-369	6		X						
B-370	6		X						
B-371	6		X						
B-372	6		X						
B-373	6		X						
B-374	6		X						
B-375	6	Field Duplicate/MS/MSD - 8082A/3540C Equipment Blank - 8082A/3540C	X						
B-376	6		X						
B-377	6		X						
B-378	6		X						
B-379	6		X						
B-380	6		X						
B-381	6		X						

Sampling Location/ID Number	Depth (ft)	Special Designation	Analytical Method						
			PCBs (8082A/3540C)	PCBs (9078)	VOCs (8260B)	SVOCs (8270C)	Pesticides (8081A)	Metals (6010C/7471B)	Cyanide (9014)
Bottom Samples									
B-382	6		X						
B-383	6		X						
B-384	6		X						
B-385	6		X						
B-386	6		X						
B-387	6		X						
B-388	6		X						
B-389	6		X						
B-390	6		X						
B-391	6		X						
B-392	6		X						
B-393	6		X						
B-394	6		X						
B-395	6	Field Duplicate/MS/MSD - 8082A/3540C Equipment Blank - 8082A/3540C	X						
B-396	6		X						
B-397	6		X						
B-398	6		X						
B-399	6		X						

Sampling Location/ID Number	Depth (ft)	Special Designation	Analytical Method						
			PCBs (8082A/3540C)	PCBs (9078)	VOCs (8260B)	SVOCs (8270C)	Pesticides (8081A)	Metals (6010C/7471B)	Cyanide (9014)
Bottom Samples									
B-400	6		X						
B-401	6		X						
B-402	6		X						
B-403	6		X						
B-404	6		X						
B-405	6		X						
B-406	6		X						
B-407	6		X						
B-408	6		X						
B-409	6		X						
B-410	6		X						
B-411	6		X						
B-412	6		X						
B-413	6		X						
B-414	1	Field Duplicate - 9078 Equipment Blank - 9078		X					
B-415	1		X	X					
B-416	1			X					
B-417	1			X					
B-418	1			X					

Sampling Location/ID Number	Depth (ft)	Special Designation	Analytical Method						
			PCBs (8082A/3540C)	PCBs (9078)	VOCs (8260B)	SVOCs (8270C)	Pesticides (8081A)	Metals (6010C/7471B)	Cyanide (9014)
Bottom Samples									
B-419	1			X					
B-420	1	Field Duplicate/MS/MSD - 8082A/3540C Equipment Blank - 8082A/3540C	X	X					
B-421	1			X					
B-422	1			X					
B-423	1			X					
B-424	1			X					
B-425	1		X	X					
B-426	1			X					
B-427	1			X					
B-428	1			X					
B-429	1			X					
B-430	1		X	X					
B-431	1			X					
B-432	1			X					
B-433	1			X					

Sampling Location/ID Number	Depth (ft)	Special Designation	Analytical Method						
			PCBs (8082A/3540C)	PCBs (9078)	VOCs (8260B)	SVOCs (8270C)	Pesticides (8081A)	Metals (6010C/7471B)	Cyanide (9014)
Bottom Samples									
B-434	7	Field Duplicate - 9078 Equipment Blank - 9078		X					
B-435	7		X	X					
B-436	7			X					
B-437	7			X					
B-438	7			X					
B-439	7			X					
B-440	7		X	X					
B-441	7			X					
B-442	7			X					
B-443	7			X					
B-444	7			X					
B-445	7		X	X					
B-446	7			X					
B-447	7			X					
B-448	7			X					
B-449	7			X					
B-450	1		X	X					
B-451	1			X					
B-452	1			X					

Sampling Location/ID Number	Depth (ft)	Special Designation	Analytical Method						
			PCBs (8082A/3540C)	PCBs (9078)	VOCs (8260B)	SVOCs (8270C)	Pesticides (8081A)	Metals (6010C/7471B)	Cyanide (9014)
Bottom Samples									
B-453	1			X					
B-454	2	Field Duplicate - 9078 Equipment Blank - 9078		X					
B-455	2		X	X					
B-456	2			X					
B-457	2			X					
B-458	2			X					
B-459	2			X					
B-460	2		X	X					
B-461	2			X					
B-462	2			X					
B-463	2			X					
B-464	2			X					
B-465	2		X	X					
B-466	2			X					
B-467	2			X					
B-468	2			X					
B-469	2			X					
B-470	2		X	X					
B-471	2			X					

Sampling Location/ID Number	Depth (ft)	Special Designation	Analytical Method						
			PCBs (8082A/3540C)	PCBs (9078)	VOCs (8260B)	SVOCs (8270C)	Pesticides (8081A)	Metals (6010C/7471B)	Cyanide (9014)
Bottom Samples									
B-472	2			X					
B-473	2			X					
B-474	2	Field Duplicate - 9078 Equipment Blank - 9078		X					
B-475	2		X	X					
B-476	2			X					
B-477	2			X					
B-478	2			X					
B-479	2			X					
B-480	2		X	X					
B-481	2			X					
B-482	2			X					
B-483	2			X					
B-484	2			X					
B-485	2		X	X					
B-486	2			X					
B-487	2			X					
B-488	2			X					
B-489	2			X					
B-490	2		X	X					

Sampling Location/ID Number	Depth (ft)	Special Designation	Analytical Method						
			PCBs (8082A/3540C)	PCBs (9078)	VOCs (8260B)	SVOCs (8270C)	Pesticides (8081A)	Metals (6010C/7471B)	Cyanide (9014)
Bottom Samples									
B-491	2			X					
B-492	2			X					
B-493	2			X					
B-494	2	Field Duplicate - 9078 Equipment Blank - 9078		X					
B-495	2		X	X					
B-496	2			X					
B-497	2			X					
B-498	2			X					
B-499	2			X					
B-500	2		X	X					
B-501	2			X					
B-502	2			X					
B-503	2			X					
B-504	2			X					
B-505	2		X	X					
B-506	2			X					
B-507	2			X					
B-508	2			X					
B-509	2			X					

Sampling Location/ID Number	Depth (ft)	Special Designation	Analytical Method						
			PCBs (8082A/3540C)	PCBs (9078)	VOCs (8260B)	SVOCs (8270C)	Pesticides (8081A)	Metals (6010C/7471B)	Cyanide (9014)
Bottom Samples									
B-510	2		X	X					
B-511	2			X					
B-512	2			X					
B-513	2			X					
B-514	2	Field Duplicate - 9078 Equipment Blank - 9078		X					
B-515	2	Field Duplicate/MS/MSD - 8082A/3540C Equipment Blank - 8082A/3540C	X	X					
B-516	2			X					
B-517	2			X					
B-518	3			X					
B-519	3			X					
B-520	3		X	X					
B-521	3			X					
B-522	7			X					
B-523	7			X					
B-524	7			X					

Sampling Location/ID Number	Depth (ft)	Special Designation	Analytical Method						
			PCBs (8082A/3540C)	PCBs (9078)	VOCs (8260B)	SVOCs (8270C)	Pesticides (8081A)	Metals (6010C/7471B)	Cyanide (9014)
Bottom Samples									
B-525	7		X	X					
B-526	7			X					
B-527	7			X					
B-528	7			X					
B-529	7			X					
B-530	7		X	X					
B-531	7			X					
B-532	7			X					
B-533	7			X					
B-534	7	Field Duplicate - 9078 Equipment Blank - 9078		X					
B-535	7		X	X					
B-536	7			X					
B-537	7			X					
B-538	7			X					
B-539	7			X					
B-540	7		X	X					
B-541	7			X					
B-542	7			X					
B-543	7			X					

Sampling Location/ID Number	Depth (ft)	Special Designation	Analytical Method						
			PCBs (8082A/3540C)	PCBs (9078)	VOCs (8260B)	SVOCs (8270C)	Pesticides (8081A)	Metals (6010C/7471B)	Cyanide (9014)
Bottom Samples									
B-544	7			X					
B-545	7		X	X					
B-546	7			X					
B-547	7			X					
B-548	7			X					
B-549	7			X					
B-550	7		X	X					
B-551	7			X					
B-552	7			X					
B-553	7			X					
B-554	3	Field Duplicate - 9078 Equipment Blank - 9078		X					
B-555	3		X	X					
B-556	3			X					
B-557	3			X					
B-558	3			X					
B-559	3			X					
B-560	3		X	X					
B-561	3			X					
B-562	3			X					

Sampling Location/ID Number	Depth (ft)	Special Designation	Analytical Method						
			PCBs (8082A/3540C)	PCBs (9078)	VOCs (8260B)	SVOCs (8270C)	Pesticides (8081A)	Metals (6010C/7471B)	Cyanide (9014)
Bottom Samples									
B-563	3			X					
B-564	3			X					
B-565	3		X	X					
B-566	3			X					
B-567	3			X					
B-568	3			X					
B-569	3			X					
B-570	3		X	X					
B-571	3			X					
B-572	3			X					
B-573	3			X					
B-574	3	Field Duplicate - 9078 Equipment Blank - 9078		X					
B-575	3		X	X					
B-576	3			X					
B-577	3			X					
B-578	3			X					
B-579	3			X					
B-580	3		X	X					
B-581	3			X					

Sampling Location/ID Number	Depth (ft)	Special Designation	Analytical Method						
			PCBs (8082A/3540C)	PCBs (9078)	VOCs (8260B)	SVOCs (8270C)	Pesticides (8081A)	Metals (6010C/7471B)	Cyanide (9014)
Bottom Samples									
B-582	3			X					
B-583	3			X					
B-584	3			X					
B-585	3		X	X					
B-586	3			X					
B-587	3			X					
B-588	3			X					
B-589	3			X					
B-590	3		X	X					
B-591	3			X					
B-592	3			X					
B-593	3			X					
B-594	3	Field Duplicate - 9078 Equipment Blank - 9078		X					
B-595	3		X	X					
B-596	3			X					
B-597	3			X					
B-598	3			X					
B-599	3			X					
B-600	3		X	X					

Sampling Location/ID Number	Depth (ft)	Special Designation	Analytical Method						
			PCBs (8082A/3540C)	PCBs (9078)	VOCs (8260B)	SVOCs (8270C)	Pesticides (8081A)	Metals (6010C/7471B)	Cyanide (9014)
Bottom Samples									
B-601	3			X					
B-602	3			X					
B-603	3			X					
B-604	3			X					
B-605	3		X	X					
B-606	3			X					
B-607	3			X					
B-608	3			X					
B-609	3			X					
B-610	3		X	X					
B-611	3			X					
B-612	3			X					
B-613	3			X					
B-614	3	Field Duplicate - 9078 Equipment Blank - 9078		X					
B-615	3	Field Duplicate/MS/MSD - 8082A/3540C Equipment Blank - 8082A/3540C	X	X					

Sampling Location/ID Number	Depth (ft)	Special Designation	Analytical Method						
			PCBs (8082A/3540C)	PCBs (9078)	VOCs (8260B)	SVOCs (8270C)	Pesticides (8081A)	Metals (6010C/7471B)	Cyanide (9014)
Bottom Samples									
B-616	3			X					
B-617	3			X					
B-618	3			X					
B-619	3			X					
B-620	3		X	X					
B-621	3			X					
B-622	3			X					
B-623	3			X					
B-624	3			X					
B-625	3		X	X					
B-626	3			X					
B-627	3			X					
B-628	3			X					
B-629	3			X					
B-630	3		X	X					
B-631	3			X					
B-632	3			X					
B-633	3			X					
B-634	3	Field Duplicate - 9078 Equipment Blank - 9078		X					

Sampling Location/ID Number	Depth (ft)	Special Designation	Analytical Method						
			PCBs (8082A/3540C)	PCBs (9078)	VOCs (8260B)	SVOCs (8270C)	Pesticides (8081A)	Metals (6010C/7471B)	Cyanide (9014)
Bottom Samples									
B-635	3		X	X					
B-636	3			X					
B-637	1			X					
B-638	1			X					
B-639	1			X					
B-640	1		X	X					
B-641	2		X						
B-642	2		X						
B-643	2		X						
B-644	2		X						
B-645	2		X						
B-646	2		X						
B-647	2		X						
B-648	2		X						
B-649	2		X						
B-650	2		X						
B-651	2		X						
B-652	2		X						
B-653	2		X						
B-654	2		X						

Sampling Location/ID Number	Depth (ft)	Special Designation	Analytical Method						
			PCBs (8082A/3540C)	PCBs (9078)	VOCs (8260B)	SVOCs (8270C)	Pesticides (8081A)	Metals (6010C/7471B)	Cyanide (9014)
Bottom Samples									
B-655	2	Field Duplicate/MS/MSD - 8082A/3540C Equipment Blank - 8082A/3540C	X						
B-656	2		X						
B-657	2		X						
B-658	2		X						
B-659	2		X						
B-660	2		X						
B-661	2		X						
B-662	2		X						
B-663	2		X						
B-664	2		X						
B-665	2		X						
B-666	2		X						
B-667	2		X						
B-668	2		X						
B-669	2		X						
B-670	2		X						
B-671	2		X						
B-672	2		X						

Sampling Location/ID Number	Depth (ft)	Special Designation	Analytical Method						
			PCBs (8082A/3540C)	PCBs (9078)	VOCs (8260B)	SVOCs (8270C)	Pesticides (8081A)	Metals (6010C/7471B)	Cyanide (9014)
Bottom Samples									
B-673	2		X						
B-674	2		X						
B-675	2	Field Duplicate/MS/MSD - 8082A/3540C Equipment Blank - 8082A/3540C	X						
B-676	2		X						
B-677	2		X						
B-678	2		X						
B-679	2		X						
B-680	2		X						
B-681	2		X						
B-682	2		X						
B-683	2		X						
B-684	2		X						
B-685	2		X						
B-686	2		X						
B-687	2		X						
B-688	2		X						
B-689	2		X						
B-690	2		X						

Sampling Location/ID Number	Depth (ft)	Special Designation	Analytical Method						
			PCBs (8082A/3540C)	PCBs (9078)	VOCs (8260B)	SVOCs (8270C)	Pesticides (8081A)	Metals (6010C/7471B)	Cyanide (9014)
Bottom Samples									
B-691	2		X						
B-692	2		X						
B-693	2		X						
B-694	2		X						
B-695	2	Field Duplicate/MS/MSD - 8082A/3540C Equipment Blank - 8082A/3540C	X						
B-696	2		X						
B-697	2		X						
B-698	2		X						
B-699	2		X						
B-700	2		X						
B-701	2		X						
B-702	2		X						
B-703	2		X						
B-704	2		X						
B-705	2		X						
B-706	4		X						
B-707	4		X						
B-708	4		X						

Sampling Location/ID Number	Depth (ft)	Special Designation	Analytical Method						
			PCBs (8082A/3540C)	PCBs (9078)	VOCs (8260B)	SVOCs (8270C)	Pesticides (8081A)	Metals (6010C/7471B)	Cyanide (9014)
Bottom Samples									
B-709	4		X						
B-710	4		X						
B-711	4		X						
B-712	4		X						
B-713	4		X						
B-714	4		X						
B-715	4	Field Duplicate/MS/MSD - 8082A/3540C Equipment Blank - 8082A/3540C	X						
B-716	4		X						
B-717	4		X						
B-718	4		X						
B-719	4		X						
B-720	4		X						
B-721	4		X						
B-722	4		X						
B-723	4		X						
B-724	4		X						
B-725	4		X						
B-726	4		X						

Sampling Location/ID Number	Depth (ft)	Special Designation	Analytical Method						
			PCBs (8082A/3540C)	PCBs (9078)	VOCs (8260B)	SVOCs (8270C)	Pesticides (8081A)	Metals (6010C/7471B)	Cyanide (9014)
Bottom Samples									
B-727	4		X						
B-728	4		X						
B-729	4		X						
B-730	4		X						
B-731	4		X						
B-732	4		X						
B-733	4		X						
B-734	4		X						
B-735	4	Field Duplicate/MS/MSD - 8082A/3540C Equipment Blank - 8082A/3540C	X						
B-736	4		X						
B-737	4		X						
B-738	4		X						
B-739	4		X						
B-740	4		X						
B-741	4		X						
B-742	4		X						
B-743	4		X						
B-744	4		X						

Sampling Location/ID Number	Depth (ft)	Special Designation	Analytical Method						
			PCBs (8082A/3540C)	PCBs (9078)	VOCs (8260B)	SVOCs (8270C)	Pesticides (8081A)	Metals (6010C/7471B)	Cyanide (9014)
Bottom Samples									
B-745	4		X						
B-746	4		X						
B-747	4		X						
B-748	4		X						
B-749	4		X						
B-750	4		X						
B-751	4		X						
B-752	4		X						
B-753	4		X						
B-754	4		X						
B-755	4	Field Duplicate/MS/MSD - 8082A/3540C Equipment Blank - 8082A/3540C	X						
B-756	4		X						
B-757	4		X						
B-758	4		X						
B-759	4		X						
B-760	4		X						
B-761	4		X						
B-762	4		X						

Sampling Location/ID Number	Depth (ft)	Special Designation	Analytical Method						
			PCBs (8082A/3540C)	PCBs (9078)	VOCs (8260B)	SVOCs (8270C)	Pesticides (8081A)	Metals (6010C/7471B)	Cyanide (9014)
Bottom Samples									
B-763	4		X						
B-764	3		X						
B-765	3		X						
B-766	3		X						
B-767	3		X						
B-768	3			X					
B-769	3			X					
B-770	3		X	X					
B-771	3			X					
B-772	3			X					
B-773	3			X					
B-774	3			X					
B-775	3		X	X					
B-776	3			X					
B-777	3			X					
B-778	3			X					
B-779	3			X					
B-780	3		X	X					
B-781	3	Field Duplicate - 9078 Equipment Blank - 9078		X					

Sampling Location/ID Number	Depth (ft)	Special Designation	Analytical Method						
			PCBs (8082A/3540C)	PCBs (9078)	VOCs (8260B)	SVOCs (8270C)	Pesticides (8081A)	Metals (6010C/7471B)	Cyanide (9014)
Bottom Samples									
B-782	3			X					
B-783	3			X					
B-784	3			X					
B-785	3		X	X					
B-786	3			X					
B-787	3			X					
B-788	1			X					
B-789	1			X					
B-790	3		X	X					
B-791	3			X					
B-792	3			X					
B-793	3			X					
B-794	5		X						
B-795	5		X						
B-796	5	Field Duplicate/MS/MSD - 8082A/3540C Equipment Blank - 8082A/3540C	X						
B-797	5		X						
B-798	5		X						
B-799	5		X						

Sampling Location/ID Number	Depth (ft)	Special Designation	Analytical Method						
			PCBs (8082A/3540C)	PCBs (9078)	VOCs (8260B)	SVOCs (8270C)	Pesticides (8081A)	Metals (6010C/7471B)	Cyanide (9014)
Bottom Samples									
B-800	5		X						
B-801	5		X						
B-802	5		X						
B-803	5		X						
B-804	5		X						
B-805	5		X						
B-806	5		X						
B-807	5		X						
B-808	6		X						
B-809	6		X						
B-810	6		X						
B-811	6		X						
B-812	6		X						
B-813	6		X						
B-814	6		X						
B-815	6		X						
B-816	6	Field Duplicate/MS/MSD - 8082A/3540C Equipment Blank - 8082A/3540C	X						
B-817	6		X						

Sampling Location/ID Number	Depth (ft)	Special Designation	Analytical Method						
			PCBs (8082A/3540C)	PCBs (9078)	VOCs (8260B)	SVOCs (8270C)	Pesticides (8081A)	Metals (6010C/7471B)	Cyanide (9014)
Bottom Samples									
B-818	6		X						
B-819	6		X						
B-820	6		X						
B-821	6		X						
B-822	2		X						
B-823	2		X						
B-824	2		X						
B-825	2		X						
B-826	2		X						
B-827	2		X						
B-828	2		X						
B-829	2		X						
B-830	2		X						
B-831	2		X						
B-832	2		X						
B-833	2		X						
B-834	2		X						
B-835	2		X						

Sampling Location/ID Number	Depth (ft)	Special Designation	Analytical Method						
			PCBs (8082A/3540C)	PCBs (9078)	VOCs (8260B)	SVOCs (8270C)	Pesticides (8081A)	Metals (6010C/7471B)	Cyanide (9014)
Bottom Samples									
B-836	2	Field Duplicate/MS/MSD - 8082A/3540C Equipment Blank - 8082A/3540C	X						
B-837	2		X						
B-838	2		X						
B-839	2		X						
B-840	2		X						
B-841	2		X						
B-842	2		X						
B-843	2		X						
B-844	3			X					
B-845	3		X	X					
B-846	3			X					
B-847	3			X					
B-848	3			X					
B-849	3			X					
B-850	3		X	X					

Sampling Location/ID Number	Depth (ft)	Special Designation	Analytical Method						
			PCBs (8082A/3540C)	PCBs (9078)	VOCs (8260B)	SVOCs (8270C)	Pesticides (8081A)	Metals (6010C/7471B)	Cyanide (9014)
Bottom Samples									
B-851	3	Field Duplicate - 9078 Equipment Blank - 9078		X					
B-852	3			X					
B-853	3			X					
B-854	3			X					
B-855	3		X	X					
B-856	3			X					
B-857	3			X					
B-858	3			X					
B-859	3			X					
B-860	3		X	X					
B-861	3			X					
B-862	3			X					
B-863	3			X					
B-864	1			X					
B-865	1		X	X					
B-866	1			X					
B-867	1			X					
B-868	1			X					
B-869	1			X					

Sampling Location/ID Number	Depth (ft)	Special Designation	Analytical Method						
			PCBs (8082A/3540C)	PCBs (9078)	VOCs (8260B)	SVOCs (8270C)	Pesticides (8081A)	Metals (6010C/7471B)	Cyanide (9014)
Bottom Samples									
B-870	1		X	X					
B-871	1	Field Duplicate - 9078 Equipment Blank - 9078		X					
B-872	1			X					
B-873	1			X					
B-874	1			X					
B-875	1		X	X					
B-876	1			X					
B-877	1			X					
B-878	1			X					
B-879	1			X					
B-880	1		X	X					
B-881	1			X					
B-882	1			X					
B-883	1			X					
B-884	1			X					
B-885	1		X	X					
B-886	1			X					
B-887	1			X					
B-888	1			X					

Sampling Location/ID Number	Depth (ft)	Special Designation	Analytical Method						
			PCBs (8082A/3540C)	PCBs (9078)	VOCs (8260B)	SVOCs (8270C)	Pesticides (8081A)	Metals (6010C/7471B)	Cyanide (9014)
Bottom Samples									
B-889	1			X					
B-890	1		X	X					
B-891	1	Field Duplicate - 9078 Equipment Blank - 9078		X					
B-892	1			X					
B-893	1			X					
B-894	1			X					
B-895	1		X	X					
B-896	2		X			X	X	X	X
B-897	2	Field Duplicate/MS/MSD - 8082A/3540C Equipment Blank - 8082A/3540C	X			X	X	X	X
B-898	2		X			X	X	X	X
B-899	2		X			X	X	X	X
B-900	2		X			X	X	X	X
B-901	2		X			X	X	X	X
B-902	2		X			X	X	X	X

Sampling Location/ID Number	Depth (ft)	Special Designation	Analytical Method						
			PCBs (8082A/3540C)	PCBs (9078)	VOCs (8260B)	SVOCs (8270C)	Pesticides (8081A)	Metals (6010C/7471B)	Cyanide (9014)
Sidewall Samples									
SW-1	3			X					
SW-2	3			X					
SW-3	3			X					
SW-4	3			X					
SW-5	3		X	X					
SW-6	3			X					
SW-7	3			X					
SW-8	3			X					
SW-9	3			X					
SW-10	3		X	X					
SW-11	3			X					
SW-12	3			X					
SW-13	3			X					
SW-14	3			X					
SW-15	3		X	X					
SW-16	3			X					
SW-17	3			X					
SW-18	3			X					
SW-19	3			X					

Sampling Location/ID Number	Depth (ft)	Special Designation	Analytical Method						
			PCBs (8082A/3540C)	PCBs (9078)	VOCs (8260B)	SVOCs (8270C)	Pesticides (8081A)	Metals (6010C/7471B)	Cyanide (9014)
Sidewall Samples									
SW-20	3	Field Duplicate - 9078 Equipment Blank - 9078	X	X					
SW-21	3			X					
SW-22	3			X					
SW-23	3			X					
SW-24	3			X					
SW-25	4		X	X					
SW-26	4			X					
SW-27	4			X					
SW-28	4			X					
SW-29	4			X					
SW-30	4		X	X					
SW-31	4			X					
SW-32	4			X					
SW-33	4			X					
SW-34	4			X					
SW-35	4		X	X					
SW-36	4			X					
SW-37	4			X					
SW-38	2			X					

Sampling Location/ID Number	Depth (ft)	Special Designation	Analytical Method						
			PCBs (8082A/3540C)	PCBs (9078)	VOCs (8260B)	SVOCs (8270C)	Pesticides (8081A)	Metals (6010C/7471B)	Cyanide (9014)
Sidewall Samples									
SW-39	2			X					
SW-40	2	Field Duplicate - 9078 Equipment Blank - 9078	X	X					
SW-41	2			X					
SW-42	2			X					
SW-43	2			X					
SW-44	2			X					
SW-45	2		X	X					
SW-46	2			X					
SW-47	2			X					
SW-48	2			X					
SW-49	2			X					
SW-50	3		X	X					
SW-51	3			X					
SW-52	3			X					
SW-53	3			X					
SW-54	3			X					
SW-55	3		X	X					
SW-56	3			X					
SW-57	3			X					

Sampling Location/ID Number	Depth (ft)	Special Designation	Analytical Method						
			PCBs (8082A/3540C)	PCBs (9078)	VOCs (8260B)	SVOCs (8270C)	Pesticides (8081A)	Metals (6010C/7471B)	Cyanide (9014)
Sidewall Samples									
SW-58	3			X					
SW-59	3			X					
SW-60	3	Field Duplicate - 9078 Equipment Blank - 9078	X	X					
SW-61	3			X					
SW-62	3			X					
SW-63	3			X					
SW-64	6			X					
SW-65	6		X	X					
SW-66	6			X					
SW-67	6			X					
SW-68	6			X					
SW-69	6			X					
SW-70	6		X	X					
SW-71	6			X					
SW-72	6			X					
SW-73	6			X					
SW-74	6			X					
SW-75	6		X	X					
SW-76	6			X					

Sampling Location/ID Number	Depth (ft)	Special Designation	Analytical Method						
			PCBs (8082A/3540C)	PCBs (9078)	VOCs (8260B)	SVOCs (8270C)	Pesticides (8081A)	Metals (6010C/7471B)	Cyanide (9014)
Sidewall Samples									
SW-77	6			X					
SW-78	6			X					
SW-79	6			X					
SW-80	6	Field Duplicate - 9078 Equipment Blank - 9078	X	X					
SW-81	6			X					
SW-82	2			X					
SW-83	2			X					
SW-84	2			X					
SW-85	2		X	X					
SW-86	2			X					
SW-87	2			X					
SW-88	2			X					
SW-89	2			X					
SW-90	2		X	X					
SW-91	2			X					
SW-92	2			X					
SW-93	2			X					
SW-94	3			X					
SW-95	3		X	X					

Sampling Location/ID Number	Depth (ft)	Special Designation	Analytical Method						
			PCBs (8082A/3540C)	PCBs (9078)	VOCs (8260B)	SVOCs (8270C)	Pesticides (8081A)	Metals (6010C/7471B)	Cyanide (9014)
Sidewall Samples									
SW-96	3			X					
SW-97	3			X					
SW-98	3			X					
SW-99	3			X					
SW-100	3	Field Duplicate - 9078 & 8082A/3540C MS/MSD - 8082A/3540C Equipment Blank - 9078 & 8082A/3540C	X	X					
SW-101	3			X					
SW-102	3			X					
SW-103	3			X					
SW-104	3			X					
SW-105	3		X	X					
SW-106	3			X					
SW-107	3			X					
SW-108	3			X					
SW-109	3			X					
SW-110	3		X	X					

Sampling Location/ID Number	Depth (ft)	Special Designation	Analytical Method						
			PCBs (8082A/3540C)	PCBs (9078)	VOCs (8260B)	SVOCs (8270C)	Pesticides (8081A)	Metals (6010C/7471B)	Cyanide (9014)
Sidewall Samples									
SW-111	3			X					
SW-112	3			X					
SW-113	3			X					
SW-114	7			X					
SW-115	7		X	X					
SW-116	7			X					
SW-117	7			X					
SW-118	7			X					
SW-119	7			X					
SW-120	7	Field Duplicate - 9078 Equipment Blank - 9078	X	X					
SW-121	7			X					
SW-122	7			X					
SW-123	7			X					
SW-124	7			X					
SW-125	7		X	X					
SW-126	2			X					
SW-127	2			X					
SW-128	2			X					
SW-129	2			X					

Sampling Location/ID Number	Depth (ft)	Special Designation	Analytical Method						
			PCBs (8082A/3540C)	PCBs (9078)	VOCs (8260B)	SVOCs (8270C)	Pesticides (8081A)	Metals (6010C/7471B)	Cyanide (9014)
Sidewall Samples									
SW-130	2		X	X					
SW-131	2			X					
SW-132	2			X					
SW-133	2			X					
SW-134	2			X					
SW-135	2		X	X					
SW-136	2			X					
SW-137	2			X					
SW-138	2			X					
SW-139	2			X					
SW-140	2	Field Duplicate - 9078 Equipment Blank - 9078	X	X					
SW-141	2			X					
SW-142	7			X					
SW-143	7			X					
SW-144	7			X					
SW-145	7		X	X					
SW-146	7			X					
SW-147	7			X					
SW-148	7			X					

Sampling Location/ID Number	Depth (ft)	Special Designation	Analytical Method						
			PCBs (8082A/3540C)	PCBs (9078)	VOCs (8260B)	SVOCs (8270C)	Pesticides (8081A)	Metals (6010C/7471B)	Cyanide (9014)
Sidewall Samples									
SW-149	7			X					
SW-150	7		X	X					
SW-151	7			X					
SW-152	7			X					
SW-153	7			X					
SW-154	7			X					
SW-155	7		X	X					
SW-156	7			X					
SW-157	7			X					
SW-158	7			X					
SW-159	7			X					
SW-160	7	Field Duplicate - 9078 Equipment Blank - 9078	X	X					
SW-161	7			X					
SW-162	7			X					
SW-163	7			X					
SW-164	7			X					
SW-165	7		X	X					
SW-166	7			X					
SW-167	7			X					

Sampling Location/ID Number	Depth (ft)	Special Designation	Analytical Method						
			PCBs (8082A/3540C)	PCBs (9078)	VOCs (8260B)	SVOCs (8270C)	Pesticides (8081A)	Metals (6010C/7471B)	Cyanide (9014)
Sidewall Samples									
SW-168	7			X					
SW-169	7			X					
SW-170	7		X	X					
SW-171	7			X					
SW-172	7			X					
SW-173	7			X					
SW-174	7			X					
SW-175	7		X	X					
SW-176	7			X					
SW-177	7			X					
SW-178	7			X					
SW-179	7			X					
SW-180	7	Field Duplicate - 9078 Equipment Blank - 9078	X	X					
SW-181	7			X					
SW-182	7			X					
SW-183	7			X					
SW-184	7			X					
SW-185	7		X	X					
SW-186	7			X					

Sampling Location/ID Number	Depth (ft)	Special Designation	Analytical Method						
			PCBs (8082A/3540C)	PCBs (9078)	VOCs (8260B)	SVOCs (8270C)	Pesticides (8081A)	Metals (6010C/7471B)	Cyanide (9014)
Sidewall Samples									
SW-187	7			X					
SW-188	7			X					
SW-189	7			X					
SW-190	7		X	X					
SW-191	7			X					
SW-192	7			X					
SW-193	7			X					
SW-194	7			X					
SW-195	7		X	X					
SW-196	7			X					
SW-197	7			X					
SW-198	7			X					
SW-199	7			X					
SW-200	6	Field Duplicate - 9078 & 8082A/3540C MS/MSD - 8082A/3540C Equipment Blank - 9078 & 8082A/3540C	X	X					
SW-201	6			X					

Sampling Location/ID Number	Depth (ft)	Special Designation	Analytical Method						
			PCBs (8082A/3540C)	PCBs (9078)	VOCs (8260B)	SVOCs (8270C)	Pesticides (8081A)	Metals (6010C/7471B)	Cyanide (9014)
Sidewall Samples									
SW-202	6			X					
SW-203	6			X					
SW-204	6			X					
SW-205	6		X	X					
SW-206	6			X					
SW-207	6			X					
SW-208	6			X					
SW-209	6			X					
SW-210	6		X	X					
SW-211	2		X						
SW-212	2		X						
SW-213	2		X						
SW-214	2		X						
SW-215	2		X						
SW-216	2		X						
SW-217	2		X						
SW-218	2		X						
SW-219	2		X						
SW-220	2		X						
SW-221	2		X						
SW-222	2		X						
SW-223	2		X						

Sampling Location/ID Number	Depth (ft)	Special Designation	Analytical Method						
			PCBs (8082A/3540C)	PCBs (9078)	VOCs (8260B)	SVOCs (8270C)	Pesticides (8081A)	Metals (6010C/7471B)	Cyanide (9014)
Sidewall Samples									
SW-224	2		X						
SW-225	2		X						
SW-226	2		X						
SW-227	2		X						
SW-228	2	Field Duplicate/MS/MSD - 8082A/3540C Equipment Blank - 8082A/3540C	X						
SW-229	2		X						
SW-230	2		X						
SW-231	2		X						
SW-232	2		X						
SW-233	2		X						
SW-234	2		X						
SW-235	2		X						
SW-236	2		X						
SW-237	2		X						
SW-238	2		X						
SW-239	4		X						
SW-240	4		X						
SW-241	4		X						

Sampling Location/ID Number	Depth (ft)	Special Designation	Analytical Method						
			PCBs (8082A/3540C)	PCBs (9078)	VOCs (8260B)	SVOCs (8270C)	Pesticides (8081A)	Metals (6010C/7471B)	Cyanide (9014)
Sidewall Samples									
SW-242	4		X						
SW-243	4		X						
SW-244	4		X						
SW-245	4		X						
SW-246	4		X						
SW-247	4		X						
SW-248	6	Field Duplicate/MS/MSD - 8082A/3540C Equipment Blank - 8082A/3540C	X						
SW-249	6		X						
SW-250	6		X						
SW-251	6		X						
SW-252	6		X						
SW-253	6		X						
SW-254	6		X						
SW-255	6		X						
SW-256	6		X						
SW-257	6		X						
SW-258	6		X						
SW-259	6		X						

Sampling Location/ID Number	Depth (ft)	Special Designation	Analytical Method						
			PCBs (8082A/3540C)	PCBs (9078)	VOCs (8260B)	SVOCs (8270C)	Pesticides (8081A)	Metals (6010C/7471B)	Cyanide (9014)
Sidewall Samples									
SW-260	6		X						
SW-261	6		X						
SW-262	6		X						
SW-263	6		X						
SW-264	6		X						
SW-265	6		X						
SW-266	6		X						
SW-267	6		X						
SW-268	6	Field Duplicate/MS/MSD - 8082A/3540C Equipment Blank - 8082A/3540C	X						
SW-269	6		X						
SW-270	7			X					
SW-271	7			X					
SW-272	7			X					
SW-273	7			X					
SW-274	7		X	X					
SW-275	7			X					
SW-276	7			X					
SW-277	7			X					

Sampling Location/ID Number	Depth (ft)	Special Designation	Analytical Method						
			PCBs (8082A/3540C)	PCBs (9078)	VOCs (8260B)	SVOCs (8270C)	Pesticides (8081A)	Metals (6010C/7471B)	Cyanide (9014)
Sidewall Samples									
SW-278	7			X					
SW-279	7	Field Duplicate - 9078 Equipment Blank - 9078	X	X					
SW-280	7			X					
SW-281	7			X					
SW-282	7			X					
SW-283	7			X					
SW-284	7		X	X					
SW-285	7			X					
SW-286	7			X					
SW-287	7			X					
SW-288	7			X					
SW-289	7		X	X					
SW-290	7			X					
SW-291	7			X					
SW-292	7			X					
SW-293	7			X					
SW-294	7		X	X					
SW-295	7			X					
SW-296	7			X					

Sampling Location/ID Number	Depth (ft)	Special Designation	Analytical Method						
			PCBs (8082A/3540C)	PCBs (9078)	VOCs (8260B)	SVOCs (8270C)	Pesticides (8081A)	Metals (6010C/7471B)	Cyanide (9014)
Sidewall Samples									
SW-297	7			X					
SW-298	7			X					
SW-299	7	Field Duplicate - 9078 Equipment Blank - 9078	X	X					
SW-300	7			X					
SW-301	7			X					
SW-302	2			X					
SW-303	2			X					
SW-304	2		X	X					
SW-305	2			X					
SW-306	2			X					
SW-307	2			X					
SW-308	2			X					
SW-309	2		X	X					
SW-310	2			X					
SW-311	2			X					
SW-312	2			X					
SW-313	2			X					
SW-314	2		X	X					
SW-315	2			X					

Sampling Location/ID Number	Depth (ft)	Special Designation	Analytical Method						
			PCBs (8082A/3540C)	PCBs (9078)	VOCs (8260B)	SVOCs (8270C)	Pesticides (8081A)	Metals (6010C/7471B)	Cyanide (9014)
Sidewall Samples									
SW-316	2			X					
SW-317	2			X					
SW-318	2			X					
SW-319	2	Field Duplicate - 9078 Equipment Blank - 9078	X	X					
SW-320	2			X					
SW-321	2			X					
SW-322	2			X					
SW-323	2			X					
SW-324	2		X	X					
SW-325	2			X					
SW-326	2			X					
SW-327	2			X					
SW-328	2			X					
SW-329	2		X	X					
SW-330	2			X					
SW-331	2			X					
SW-332	2			X					
SW-333	2			X					
SW-334	2		X	X					

Sampling Location/ID Number	Depth (ft)	Special Designation	Analytical Method						
			PCBs (8082A/3540C)	PCBs (9078)	VOCs (8260B)	SVOCs (8270C)	Pesticides (8081A)	Metals (6010C/7471B)	Cyanide (9014)
Sidewall Samples									
SW-335	2			X					
SW-336	3			X					
SW-337	3			X					
SW-338	3			X					
SW-339	3	Field Duplicate - 9078 Equipment Blank - 9078	X	X					
SW-340	7			X					
SW-341	7			X					
SW-342	7			X					
SW-343	7			X					
SW-344	7		X	X					
SW-345	7			X					
SW-346	7			X					
SW-347	7			X					
SW-348	7			X					
SW-349	7		X	X					
SW-350	7			X					
SW-351	7			X					
SW-352	7			X					
SW-353	7			X					

Sampling Location/ID Number	Depth (ft)	Special Designation	Analytical Method						
			PCBs (8082A/3540C)	PCBs (9078)	VOCs (8260B)	SVOCs (8270C)	Pesticides (8081A)	Metals (6010C/7471B)	Cyanide (9014)
Sidewall Samples									
SW-354	7		X	X					
SW-355	7			X					
SW-356	7			X					
SW-357	7			X					
SW-358	7			X					
SW-359	7	Field Duplicate - 9078 Equipment Blank - 9078	X	X					
SW-360	7			X					
SW-361	7			X					
SW-362	7			X					
SW-363	7			X					
SW-364	7	Field Duplicate/MS/MSD - 8082A/3540C Equipment Blank - 8082A/3540C	X	X					
SW-365	7			X					
SW-366	7			X					
SW-367	7			X					
SW-368	7			X					

Sampling Location/ID Number	Depth (ft)	Special Designation	Analytical Method						
			PCBs (8082A/3540C)	PCBs (9078)	VOCs (8260B)	SVOCs (8270C)	Pesticides (8081A)	Metals (6010C/7471B)	Cyanide (9014)
Sidewall Samples									
SW-369	7		X	X					
SW-370	7			X					
SW-371	7			X					
SW-372	7			X					
SW-373	7			X					
SW-374	7		X	X					
SW-375	7			X					
SW-376	7			X					
SW-377	7			X					
SW-378	7			X					
SW-379	7	Field Duplicate - 9078 Equipment Blank - 9078	X	X					
SW-380	7			X					
SW-381	7			X					
SW-382	3			X					
SW-383	3			X					
SW-384	3		X	X					
SW-385	3			X					
SW-386	3			X					
SW-387	3			X					

Sampling Location/ID Number	Depth (ft)	Special Designation	Analytical Method						
			PCBs (8082A/3540C)	PCBs (9078)	VOCs (8260B)	SVOCs (8270C)	Pesticides (8081A)	Metals (6010C/7471B)	Cyanide (9014)
Sidewall Samples									
SW-388	3			X					
SW-389	3		X	X					
SW-390	3			X					
SW-391	3			X					
SW-392	3			X					
SW-393	3			X					
SW-394	3		X	X					
SW-395	3			X					
SW-396	3			X					
SW-397	3			X					
SW-398	3			X					
SW-399	3	Field Duplicate - 9078 Equipment Blank - 9078	X	X					
SW-400	3			X					
SW-401	3			X					
SW-402	3			X					
SW-403	3			X					
SW-404	3		X	X					
SW-405	3			X					
SW-406	3			X					

Sampling Location/ID Number	Depth (ft)	Special Designation	Analytical Method						
			PCBs (8082A/3540C)	PCBs (9078)	VOCs (8260B)	SVOCs (8270C)	Pesticides (8081A)	Metals (6010C/7471B)	Cyanide (9014)
Sidewall Samples									
SW-407	3			X					
SW-408	3			X					
SW-409	3		X	X					
SW-410	3			X					
SW-411	3			X					
SW-412	3			X					
SW-413	3			X					
SW-414	3		X	X					
SW-415	3			X					
SW-416	3			X					
SW-417	3			X					
SW-418	3			X					
SW-419	3	Field Duplicate - 9078 Equipment Blank - 9078	X	X					
SW-420	3			X					
SW-421	3			X					
SW-422	3			X					
SW-423	3			X					
SW-424	3		X	X					
SW-425	3			X					

Sampling Location/ID Number	Depth (ft)	Special Designation	Analytical Method						
			PCBs (8082A/3540C)	PCBs (9078)	VOCs (8260B)	SVOCs (8270C)	Pesticides (8081A)	Metals (6010C/7471B)	Cyanide (9014)
Sidewall Samples									
SW-426	3			X					
SW-427	3			X					
SW-428	3			X					
SW-429	3		X	X					
SW-430	3			X					
SW-431	3			X					
SW-432	3			X					
SW-433	3			X					
SW-434	3		X	X					
SW-435	3			X					
SW-436	3			X					
SW-437	3			X					
SW-438	3			X					
SW-439	3	Field Duplicate - 9078 Equipment Blank - 9078	X	X					
SW-440	3			X					
SW-441	3			X					
SW-442	3			X					
SW-443	3			X					
SW-444	3		X	X					

Sampling Location/ID Number	Depth (ft)	Special Designation	Analytical Method						
			PCBs (8082A/3540C)	PCBs (9078)	VOCs (8260B)	SVOCs (8270C)	Pesticides (8081A)	Metals (6010C/7471B)	Cyanide (9014)
Sidewall Samples									
SW-445	3			X					
SW-446	3			X					
SW-447	3			X					
SW-448	3			X					
SW-449	3		X	X					
SW-450	3			X					
SW-451	3			X					
SW-452	3			X					
SW-453	3			X					
SW-454	3		X	X					
SW-455	3			X					
SW-456	3			X					
SW-457	3			X					
SW-458	3			X					
SW-459	3	Field Duplicate - 9078 Equipment Blank - 9078	X	X					
SW-460	3			X					
SW-461	3			X					
SW-462	3			X					
SW-463	3			X					

Sampling Location/ID Number	Depth (ft)	Special Designation	Analytical Method						
			PCBs (8082A/3540C)	PCBs (9078)	VOCs (8260B)	SVOCs (8270C)	Pesticides (8081A)	Metals (6010C/7471B)	Cyanide (9014)
Sidewall Samples									
SW-464	2	Field Duplicate/MS/MSD - 8082A/3540C Equipment Blank - 8082A/3540C	X						
SW-465	2		X						
SW-466	2		X						
SW-467	2		X						
SW-468	2		X						
SW-469	2		X						
SW-470	2		X						
SW-471	2		X						
SW-472	2		X						
SW-473	2		X						
SW-474	2		X						
SW-475	2		X						
SW-476	2		X						
SW-477	2		X						
SW-478	2		X						
SW-479	2		X						
SW-480	2		X						
SW-481	2		X						

Sampling Location/ID Number	Depth (ft)	Special Designation	Analytical Method						
			PCBs (8082A/3540C)	PCBs (9078)	VOCs (8260B)	SVOCs (8270C)	Pesticides (8081A)	Metals (6010C/7471B)	Cyanide (9014)
Sidewall Samples									
SW-482	2		X						
SW-483	2		X						
SW-484	2	Field Duplicate/MS/MSD - 8082A/3540C Equipment Blank - 8082A/3540C	X						
SW-485	2		X						
SW-486	2		X						
SW-487	2		X						
SW-488	2		X						
SW-489	4		X						
SW-490	4		X						
SW-491	4		X						
SW-492	4		X						
SW-493	4		X						
SW-494	4		X						
SW-495	4		X						
SW-496	4		X						
SW-497	4		X						
SW-498	4		X						
SW-499	4		X						

Sampling Location/ID Number	Depth (ft)	Special Designation	Analytical Method						
			PCBs (8082A/3540C)	PCBs (9078)	VOCs (8260B)	SVOCs (8270C)	Pesticides (8081A)	Metals (6010C/7471B)	Cyanide (9014)
Sidewall Samples									
SW-500	4		X						
SW-501	4		X						
SW-502	4		X						
SW-503	4		X						
SW-504	4	Field Duplicate/MS/MSD - 8082A/3540C Equipment Blank - 8082A/3540C	X						
SW-505	4		X						
SW-506	4		X						
SW-507	4		X						
SW-508	4		X						
SW-509	4		X						
SW-510	4		X						
SW-511	4		X						
SW-512	4		X						
SW-513	4		X						
SW-514	4		X						
SW-515	4		X						
SW-516	4		X						
SW-517	4		X						

Sampling Location/ID Number	Depth (ft)	Special Designation	Analytical Method						
			PCBs (8082A/3540C)	PCBs (9078)	VOCs (8260B)	SVOCs (8270C)	Pesticides (8081A)	Metals (6010C/7471B)	Cyanide (9014)
Sidewall Samples									
SW-518	4		X						
SW-519	4		X						
SW-520	4		X						
SW-521	4		X						
SW-522	4		X						
SW-523	4		X						
SW-524	4	Field Duplicate/MS/MSD - 8082A/3540C Equipment Blank - 8082A/3540C	X						
SW-525	4		X						
SW-526	4		X	X					
SW-527	4			X					
SW-528	4			X					
SW-529	4			X					
SW-530	3		X						
SW-531	3		X						
SW-532	3		X						
SW-533	3			X					
SW-534	3		X	X					
SW-535	3			X					

Sampling Location/ID Number	Depth (ft)	Special Designation	Analytical Method						
			PCBs (8082A/3540C)	PCBs (9078)	VOCs (8260B)	SVOCs (8270C)	Pesticides (8081A)	Metals (6010C/7471B)	Cyanide (9014)
Sidewall Samples									
SW-536	3			X					
SW-537	3			X					
SW-538	3			X					
SW-539	3		X	X					
SW-540	3			X					
SW-541	3			X					
SW-542	3			X					
SW-543	3			X					
SW-544	3	Field Duplicate - 9078 Equipment Blank - 9078	X	X					
SW-545	3			X					
SW-546	3			X					
SW-547	3			X					
SW-548	3			X					
SW-549	3		X	X					
SW-550	3			X					
SW-551	3			X					
SW-552	3			X					
SW-553	3			X					
SW-554	3		X	X					

Sampling Location/ID Number	Depth (ft)	Special Designation	Analytical Method						
			PCBs (8082A/3540C)	PCBs (9078)	VOCs (8260B)	SVOCs (8270C)	Pesticides (8081A)	Metals (6010C/7471B)	Cyanide (9014)
Sidewall Samples									
SW-555	3			X					
SW-556	3			X					
SW-557	3			X					
SW-558	3			X					
SW-559	3		X	X					
SW-560	3			X					
SW-561	3			X					
SW-562	3			X					
SW-563	3			X					
SW-564	3	Field Duplicate - 9078 Equipment Blank - 9078	X	X					
SW-565	3			X					
SW-566	5			X					
SW-567	5			X					
SW-568	5			X					
SW-569	5		X	X					
SW-570	5			X					
SW-571	5			X					
SW-572	5			X					
SW-573	5			X					

Sampling Location/ID Number	Depth (ft)	Special Designation	Analytical Method						
			PCBs (8082A/3540C)	PCBs (9078)	VOCs (8260B)	SVOCs (8270C)	Pesticides (8081A)	Metals (6010C/7471B)	Cyanide (9014)
Sidewall Samples									
SW-574	5		X	X					
SW-575	5			X					
SW-576	5			X					
SW-577	5			X					
SW-578	6		X						
SW-579	6		X						
SW-580	6		X						
SW-581	6		X						
SW-582	2		X						
SW-583	2	Field Duplicate/MS/MSD - 8082A/3540C Equipment Blank - 8082A/3540C	X						
SW-584	2		X						
SW-585	2		X						
SW-586	2		X						
SW-587	2		X						
SW-588	2		X						
SW-589	2		X						
SW-590	2		X						
SW-591	2		X						

Sampling Location/ID Number	Depth (ft)	Special Designation	Analytical Method						
			PCBs (8082A/3540C)	PCBs (9078)	VOCs (8260B)	SVOCs (8270C)	Pesticides (8081A)	Metals (6010C/7471B)	Cyanide (9014)
Sidewall Samples									
SW-592	2		X						
SW-593	2		X						
SW-594	2		X						
SW-595	2		X						
SW-596	2		X						
SW-597	2		X						
SW-598	3			X					
SW-599	3		X	X					
SW-600	3			X					
SW-601	3			X					
SW-602	3			X					
SW-603	3			X					
SW-604	3	Field Duplicate - 9078 Equipment Blank - 9078	X	X					
SW-605	3			X					
SW-606	3			X					
SW-607	3			X					
SW-608	3			X					
SW-609	3		X	X					
SW-610	3			X					

Sampling Location/ID Number	Depth (ft)	Special Designation	Analytical Method						
			PCBs (8082A/3540C)	PCBs (9078)	VOCs (8260B)	SVOCs (8270C)	Pesticides (8081A)	Metals (6010C/7471B)	Cyanide (9014)
Sidewall Samples									
SW-611	3			X					
SW-612	3			X					
SW-613	3			X					
SW-614	3		X	X					
SW-615	3			X					
SW-616	6			X	X				
SW-617	6			X	X				
SW-618	6			X	X				
SW-619	6		X	X	X				
SW-620	6			X	X				
SW-621	6			X	X				
SW-622	6			X	X				
SW-623	6			X	X				
SW-624	6	Field Duplicate - 9078 & 8082A/3540C MS/MSD - 8082A/3540C Equipment Blank - 9078 & 8082A/3540C	X	X	X				
SW-625	6			X	X				

Sampling Location/ID Number	Depth (ft)	Special Designation	Analytical Method						
			PCBs (8082A/3540C)	PCBs (9078)	VOCs (8260B)	SVOCs (8270C)	Pesticides (8081A)	Metals (6010C/7471B)	Cyanide (9014)
Sidewall Samples									
SW-626	6			X	X				
SW-627	6			X	X				
SW-628	6			X	X				
SW-629	6		X	X	X				
SW-630	6			X	X				
SW-631	6			X	X				
SW-632	6			X	X				
SW-633	6			X	X				
SW-634	6		X	X	X				
SW-635	6	Field Duplicate, MS/MSD - 8260B Equipment Blank - 8260B		X	X				
SW-636	6			X	X				
Total # of Samples, excluding QC:			646	1115	21	7	7	7	7
Total # of Samples, including QC:			742	1225	24	7	7	7	7

Table 5-2: Groundwater Analytical Services

Sample Number	Sample Depth (ft)	Special Designation	Analytical Methods
			VOCs (8260B)
MW-302I	NA		X
MW-302S	NA		X
MW-34D	NA		X
MW-34S	NA		X
MW-102D	NA		X
MW-102S	NA		X
Total number of samples, excluding QC			12
Total number of samples, including QC			12

Table 5-3: Soil Analytical Method, Containers, Preservation, and Holding Times Requirements Matrix = Soil

Analytical Parameter and/or Field Measurements	Analytical Method Number	Containers (number, type, size/volume)	Preservation Requirements (chemical, temperature, light protection)	Maximum Holding Times
PCBs	8082A/3540	1-8oz Amber Glass with Teflon-lined cap	Ice, 4°C	14 days to extraction; 40 days from extraction to analysis
PCBs	9078	1-white-capped test tube containing 10-gms soil	None	5-minutes following extraction.
VOCs	8260B	High level analysis: 1- 40 mL vial filled with 5 mL methanol (5 g soil to 5 mL methanol) Low level analysis: 2-40 mL vials with Teflon stir bar and filled with 5 mL deionized water (5 g soil to 5 mL deionized water) % solids: 1 - 60 mL plastic	Ice, 4°C, in field	14 days from collection to analysis for methanol and water preserved samples
SVOCs	8270C	1-8 oz. amber glass with Teflon-lined cap	Ice, 4°C.	14 days to analysis
Metals	6010C/7471B	1-8 oz. amber glass with Teflon-lined cap	Ice, 4°C.	28 days to analysis (mercury); 180 days to analysis (other metals).
Cyanide	9014	1-8 oz. amber glass with Teflon-lined cap	Ice, 4°C.	14 days to analysis
TPH	8100 Modified	1-8 oz. amber glass with Teflon-lined cap	Ice, 4°C.	14 days to extraction; 40 days from extraction to analysis
Pesticides	8081A	1-8 oz. amber glass with Teflon-lined cap	Ice, 4°C.	14 days to extraction; 40 days from extraction to analysis

Table 5-4: Groundwater Analytical Method, Containers, Preservation, and Holding Times Requirements

Analytical Parameter and/or Field Measurements	Analytical Method Number	Containers (number, type, size/volume)	Preservation Requirements (chemical, temperature, light protection)	Maximum Holding Times
PCBs	8082A	2 x 1 L amber glass with Teflon-lined cap	Ice, 4°C	7 days
VOCs	8260B	3 x 40 mL vials	HCl to pH <2; Ice, 4°C	14 days

6.0 FIELD METHODS AND PROCEDURES

The sampling discussions below track the samples identified in Section 4.0 and the Analytical Services of Section 5.0. Some of the following sections are not applicable to this project and are indicated by "Not Applicable".

6.1 Field Equipment

6.1.1 List of Equipment Needed

The field equipment for this project will include a PID, Dexsil L2000DX PCB/Chloride Analyzer System, an electronic water level indicator, and water quality instrumentation with flow-through cell. **Table 6-1** shows what material the field equipment will be used to sample or screen. AEI field personnel will be responsible for ensuring that the instruments are properly functioning. At a minimum, this will entail checking the instrument prior to shipment to the field and performing daily operational checks and calibration as described in **Table 6-2**. Routine maintenance and trouble-shooting procedures will be performed as described in the manufacturer's instructions. Spare parts will be readily available on site or from the vendor.

6.1.2 Calibration of Field Equipment

The field instrumentation requiring field calibration will include a PID, Dexsil L2000DX PCB/Chloride Analyzer, water quality meter, and turbidity meter (**Table 6-2**). Calibration will be performed daily or anytime that the operator suspects that the instrument is not reading accurately according to the manufacturer's specifications.

All calibrations and calibration checks will be documented in the field records. Calibration records will include the date/time of calibration/calibration check, name of the person performing the calibration, reference standard used, and the results of the calibration or check.

6.2 Field Screening

Depending upon project schedule and cost considerations, field-screening data may be used to establish the presence or absence of PCB concentrations in soil using an EPA-approved field extraction and analysis technology (EPA Method 9078). Prior to using the Dexsil L2000DX PCB/Chloride Analyzer System for making field decisions, a Comparability Study will be completed to determine if the results obtained compare favorably with results obtained for duplicate samples analyzed using EPA Method 8082/3540, of if matrix interferences are present which will preclude the use of this system.

The Comparability Study will be completed using samples obtained from the stockpiled soils from a prior 2017 Test Pit program. A total of nine soil samples from the stockpile and one sample from an area with known PCB concentrations <1 mg/kg will be obtained. The samples will be homogenized and split for analysis via field and laboratory analyses. These results will be evaluated to determine if the results produced via the field method are appropriate for use in

making field decisions. The evaluation will include a regression analysis and calculation of RPDs for each sample. If the results are found to be acceptable, AEI will determine if the use of a multiplier for the field screening results will be necessary to assure that false negatives are eliminated (i.e., soils that actually contain >25 mg/kg aren't identified as <25 mg/kg soils). (See Attachment 3 of the CMI WP for results of the Comparability Study and for the attached SOP developed for use of the Dexsil method).

Once the PCB screening method has been shown to be acceptable for use, it will be employed to show compliance with the 25 mg/kg cleanup level during excavation activities. Areas where the cleanup level is less (i.e., Floodway, where cleanup must achieve < 1 ppm), AEI will utilize laboratory analyses only when the extent of the excavation has been achieved. However, the Dexsil method will also be used in this area during the excavation process to guide the extent of excavation required. For every ten (10) PCB screening samples collected and analyzed by the Dexsil L2000DX PCB/Chloride analyzer, two (2) soil samples will be submitted to the laboratory for PCB analysis via EPA Method 8082A/3540C Soxhlet Extraction to verify the field screening results.

Additionally, field screening for VOCs using PID instrumentation and visual observations will be used by the field team to evaluate and adjust excavation depths and locations as needed, specifically in the areas of SWMU-8 and 11, but in others also, as needed. This approach to the field investigation is a key component of a dynamic CMI.

6.3 Soil

6.3.1 Surface Soil Sampling

Not Applicable, soil samples are to be collected from the final excavations which are greater or equal in depth than 6-12 inches below the ground surface.

6.3.2 Subsurface Soil Sampling

The majority of the soil sampling will be conducted below the ground surface at depths equal to or exceeding 12 inches. Sample depths will be achieved through contaminated soil removal as designed in the CMI WP. Refer to Section B.2.2 in the QAPP for soil sampling SOPs. The locations, except for sidewall samples, and sample designations are shown on **Figures 1** and **2** and the rationale given in **Table 4-1**.

Samples to be analyzed for VOCs will be collected first. Subsurface samples will be collected by hand at the desired sample depth once soil removal is complete. Once the desired sample depth is reached, soil samples for VOC analyses will be collected as independent, discrete samples. The top 6-inches of soil should be removed to encounter an "undisturbed" layer. Surface soil samples will be collected using the laboratory supplied Encore sampler, and will be collected in triplicate (one high-level and two low-level VOAs). Samples will be placed, sealed and properly stored in the pre-preserved laboratory sample jars. See Section 7.1 for shipping procedures.

Subsurface samples will be collected by manual methods (i.e., trowel) to the desired sample depth. Once the desired sample depth is reached, the AEI field staff, will collect a sample from the sidewall and bottom of the excavations. Sidewall samples will be collected as composites

from the bottom to the top of the sidewall from depths of 0 to 4 ft bgs and from 4 to 8 ft bgs (or less), as necessary. AEI field staff are not to enter an excavation deeper than 4-feet and will sample from the contractor excavator bucket. Samples, either from hand removal or from the excavator bucket will be transferred to a sample-dedicated disposable pail and homogenized. Material in the pail will be transferred from the pail to the appropriate sample containers. Sample containers will be filled to the top taking care to prevent soil from remaining in the lid threads prior to being sealed to prevent potential contaminant migration to or from the sample. See Section 7.1 for shipping procedures.

AEI field staff will utilize sampling techniques to minimize excess soil from sampling activities. Any excess soil generated from soil sampling will be added to the existing soil waste streams.

6.4 Sediment Sampling

Not applicable to this scope of work.

6.5 Water Sampling

6.5.1 Surface Water Sampling

Not applicable to this scope of work.

6.5.2 Groundwater Sampling

This subsection contains procedures for water level measurements, well purging, and well sampling.

6.5.2.1 Water-Level Measurements, Purging, and Well Sampling

Water-Level Measurements

All field meters will be calibrated according to manufacturer's guidelines and specifications before and after every day of field use. Field meter probes will be decontaminated before and after use at each well according to SOP#2006 – Sampling Equipment Decontamination.

Water level measurements will follow the SOP#2043 – Manual Water Level Measurement. If well heads are accessible, all wells will be sounded for depth to water from top of casing and total well depth prior to purging. An electronic sounder, accurate to the nearest +/- 0.01 feet, will be used to measure depth to water in each well. When using an electronic sounder, the probe is lowered down the casing to the top of the water column. The graduated markings on the probe wire or tape are used to measure the depth to water from the surveyed point on the rim of the well casing. Typically, the measuring device emits a constant tone when the probe is submerged in standing water and most electronic water level sounders have a visual indicator consisting of a small light bulb or diode that turns on when the probe encounters water. Total well depth will be sounded from the surveyed top of casing by lowering the weighted probe to the bottom of the well. The weighted probe will sink into silt, if present, at the bottom of the well screen. Total well depths will be measured by lowering the weighted probe to the bottom of the well and recording the depth to the nearest 0.1 feet.

Water-level sounding equipment will be decontaminated before and after use in each well. Water levels will be measured in wells which have the least amount of known contamination first. Wells with known or suspected contamination will be measured last.

Monitoring Well Sampling

Groundwater samples will be collected from existing monitoring wells with portable bladder pumps using disposable bladders and low-flow sampling techniques. **Figure 3** indicates the six (6) monitoring wells to be sampled (wells MW-302I, MW-302S, MW34S, MW-34D, MW102D, MW-102S). Analyses to be performed and sampling and analysis rationale are provided in earlier sections.

SOPs for sampling techniques and equipment calibration and operation are provided in **Appendix A** of the **QAPP**. The following SOPs are associated with groundwater sampling.

- SOP#2114 – Photoionization Detector HNU
- SOP#2043 – Manual Water Level Measurement
- EQASOP – Calibration of Field Instruments
- EQASOP-GW 001 – Region 1 Low Stress (Low-Flow) Purging and Sampling Procedure for the Collection of Groundwater Samples from Monitoring Wells
- SOP#2005 – Sampling Equipment Decontamination

All wells will be purged prior to sampling. If the well casing volume is known, a minimum of three casing volumes of water will be purged using the portable bladder pump. Water will be collected into a measured bucket to record the purge volume. Casing volumes will be calculated based on total well depth, standing water level, and casing diameter. One casing volume will be calculated as:

$$\mathbf{V = nd^2 h / 77.01}$$

where: **V** is the volume of one well casing of water ($1ft^3$ = 7.48 gallons);
d is the inner diameter of the well casing (in inches);
h is the total depth of water in the well (in feet).

It is important to obtain a representative sample from the wells. Stable water quality parameters, as defined in EQASOP-GW 001, measurements indicate representative sampling is obtained. If turbidity below 25 NTU cannot be achieved during sampling, the turbidity will be considered part of the total contaminant mobile load and an unfiltered sample will be collected. If metals analysis is required at that location, a filtered and unfiltered sample will be collected for analysis. The agency will be consulted in such instances to ensure agreement of this or alternate sampling approaches to meet project objectives.

At each sampling location, all bottles designated for a particular analysis (e.g., volatile organic compounds) will be filled sequentially before bottles designated for the next analysis are filled (e.g., semi volatile organic compounds). If a duplicate sample is to be collected at this location, all bottles designated for a particular analysis for both sample designations will be filled

sequentially before bottles for another analysis are filled. In the filling sequence for duplicate samples, bottles with the two different sample designations will alternate (e.g., volatile organic compounds designation GW-2, volatile organic compounds designation GW-4 (duplicate of GW-2), metals designation GW-2, and metals designation GW-4 (duplicate of GW-2). Groundwater samples will be transferred directly into the appropriate sample containers with preservative, if required, chilled if appropriate, and processed for shipment to the laboratory.

If a well dewaters during purging and three casing volumes are not purged, that well will be allowed to recharge up to 80% of the static water column and dewatered once more. After water levels have recharged to 80% of the static water column, groundwater samples will be collected.

6.6 Other

Concrete sampling will be conducted for disposal and/or on-Site reuse purposes only. Unless required to be demolished and removed to access contaminated soils below, concrete is to remain in place. Concrete sampling will follow the methods discussed in EPA's Standard Operating Procedure for Sampling Porous Materials. Sample locations and frequency will be determined in the field. The concrete samples will be analyzed for PCBs using USEPA SW-846 8082A/3540C Soxhlet Extraction Method.

6.7 Decontamination Procedures

Equipment will be decontaminated in designated areas on-Site in accordance with the procedures outlined in SOP#2006 – Sampling Equipment Decontamination. The decontamination procedures in SOP#2006 will be modified as follows:

If field equipment comes into contact with PCB soils, the decontamination procedure will consist of a tap water and detergent initial cleaning, then each piece of equipment will be rinsed with tap water and hexane. The tap water and hexane rinse will be conducted twice. Equipment should be allowed to dry completely prior to reuse.

Decontamination of the drilling equipment, for installation of new monitoring wells, will be performed by the drilling subcontractors. AEI will provide the drilling subcontractors with a copy of SOP#2006 – Sampling Equipment Decontamination (Appendix A of the QAPP) and will oversee that the decontamination is performed in accordance with the SOP and the above deviations.

Decontamination fluids and other decontamination materials (i.e., PPE, rags, other consumables) will be collected in 55-gallon drums and managed in accordance with 40 CFR 761.61(b)(1).

Table 6-1: Field and Sampling Equipment

Description of Equipment	Material (if applicable)	Dedicated (Yes/No)
Photoionization Detector (MiniRae 3000 or equivalent)	Soil	Yes
Dexsil L2000DX PCB/Chloride Analyzer	Soil	Yes
Water Quality Meter (YSI 500 or equivalent)	Water	Yes
Turbidity Meter (LaMotte 2020 or equivalent)	Water	Yes
Water Level Meter (Solinst or equivalent)	Water	Yes

Table 6-2: Field Equipment/Instrument Calibration, Maintenance, Testing, and Inspection

Analytical Parameter	Field Equipment/ Instrument	Calibration Activity	Maintenance & Testing/ Inspection Activity	Frequency	Acceptance Criteria	Corrective Action
VOCs (soil)	PID	Span and Zero	Inspect unit in accordance with manufacturer's specifications. Any alarms should be dealt with prior to use. Replace or repair parts, as needed, in accordance with manufacturer's specifications.	Daily	Zero and span = 100 ppm as referenced to isobutylene gas	Recalibrate until zero and span are within 95% of their respective reference values.
PCBs (soil)	Dexsil L2000DX PCB/Chloride Analyzer	Span and zero	Repair and replace parts, as needed, in accordance with manufacturer's instructions supplied with the analyzer.	Daily	Low-level adjusted for blank reagent; high-level spans upper clean up standard of 25 mg/kg.	Recalibrate if changing methods or temperature shifts by more than 5°C.

Analytical Parameter	Field Equipment/ Instrument	Calibration Activity	Maintenance & Testing/ Inspection Activity	Frequency	Acceptance Criteria	Corrective Action
VOCs (GW)	Water Quality Meter	pH, DO, specific conductance, ORP.	Repair and replace parts, as needed, in accordance with manufacturer's instructions supplied with the analyzer.	Daily	Within manufacturer's and water quality guideline specifications.	Recalibrate as needed.
Turbidity	Turbidity Meter	Three-point calibration	Repair and replace parts, as needed, in accordance with manufacturer's instructions supplied with the analyzer.	Daily	Low, mid and high turbidity	Recalibrate if not meeting specifications.

7.0 SAMPLE CONTAINERS, PRESERVATION, PACKAGING and SHIPPING

7.1 Soil Samples

The type of soil sample containers, volumes, and preservatives are listed in **Table 5-3**. The containers are pre-cleaned and will not be rinsed prior to sample collection. Preservatives, if required, will be added by the analytical laboratory to the containers prior to shipment of the samples to the field staff.

VOLATILE ORGANIC COMPOUNDS: Soil samples to be analyzed for volatile organic compounds will be stored in their sealed sample VOAs for no more than two days prior to analysis. Samples will be chilled to 4°C immediately upon collection. Frozen samples will be stored for no more than 4 days prior to analysis. If samples are preserved by ejecting into either methanol or sodium bisulfate solution the holding time is two weeks.

OTHER ORGANIC COMPOUNDS: Soil samples for PCBs to be analyzed via laboratory analytical methods, and others as needed, will be homogenized and transferred from the sample-dedicated homogenization pail into 8-ounze wide-mouth glass jars. The samples will be chilled to 4°C immediately upon collection. PCB samples to be analyzed via the Dexsil screening method shall immediately be analyzed using the kit extraction method.

7.2 Sediment Samples

Not applicable

7.3 Water Samples

The type of water sample containers, volumes, and preservatives are listed in in **Table 5-4**. The containers are pre-cleaned and will not be rinsed prior to sample collection. Preservatives, if required, will be added by the analytical laboratory to the containers prior to shipment of the samples to the field staff.

VOLATILE ORGANIC COMPOUNDS: Low concentration water samples to be analyzed for volatile organic compounds will be collected in 40-ml glass vials. 1:1 hydrochloric acid (HCl) will be added to the vial prior to sample collection. The sample vials will be filled so that there is no headspace. The vials will be inverted and checked for air bubbles to ensure zero headspace. If a bubble appears, the vial will be discarded and a new sample will be collected. The samples will be chilled to 4°C immediately upon collection. Three vials of each water sample are required.

Water samples to be analyzed for PCBs will be collected in 1-Liter amber glass jars. PCB samples will be chilled to 4°C immediately upon collection.

7.4 Other Samples

Concrete samples will follow the same container, volume and preservative requirements as soil, unless otherwise specified by the laboratory.

7.5 Packaging and Shipping

All sample containers will be placed in a strong-outside shipping container (a steel-belted cooler). The following outlines the packaging procedures that will be followed for low concentration samples.

- When ice is used, pack it in zip-locked, double plastic bags. Seal the drain plug of the cooler with fiberglass tape to prevent melting ice from leaking out of the cooler.
- The bottom of the cooler should be lined with bubble wrap to prevent breakage during shipment.
- Check screw caps for tightness and, if not full, mark the sample volume level of liquid samples on the outside of the sample bottles with indelible ink.
- Secure bottle/container tops with clear tape and custody seal all container tops.
- Affix sample labels onto the containers with clear tape.
- Wrap all glass sample containers in bubble wrap to prevent breakage.
- Seal all sample containers in heavy duty plastic zip-lock bags. Write the sample numbers on the outside of the plastic bags with indelible ink.
- Place samples in a sturdy cooler(s) lined with a large plastic trash bag. Enclose the appropriate COC(s) in a zip-lock plastic bag affixed to the underside of the cooler lid.
- Fill empty space in the cooler with bubble wrap or Styrofoam peanuts to prevent movement and breakage during shipment. Vermiculite should also be placed in the cooler to absorb spills if they occur.
- Ice used to cool samples will be double sealed in two zip lock plastic bags and placed on top and around the samples to chill them to the correct temperature.
- Each ice chest will be securely taped shut with fiberglass strapping tape, and custody seals will be affixed to the front, right and back of each cooler.

8.0 DISPOSAL OF RESIDUAL MATERIALS

In the process of collecting environmental samples, the sampling team will generate different types of potentially contaminated IDW that include the following:

- Used personal protective equipment (PPE)
- Disposable sampling equipment
- Decontamination fluids
- Purged groundwater and excess groundwater collected for sample container filling

The EPA's National Contingency Plan (NCP) requires that management of IDW generated during sampling comply with all applicable or relevant and appropriate requirements (ARARs) to the extent practicable. In addition, other legal and practical considerations that may affect the handling of IDW will be considered.

- Used PPE and disposable equipment that does not come into contact with PCB-impacted soils will be double bagged and placed in a municipal refuse dumpster. These wastes are not considered hazardous and can be sent to a municipal landfill. Any PPE and disposable equipment that is to be disposed of which can still be reused will be rendered inoperable before disposal in the refuse dumpster. If PPE comes into contact with PCB soils, then disposal shall include placing the materials into 55-gallon drums and dispose of according to TSCA disposal regulations.

- Decontamination fluids that will be generated in the sampling event will consist of pesticide-grade solvent, deionized water, residual contaminants, and water with non-phosphate detergent. The volume and concentration of the decontamination fluid will be sufficiently low to allow disposal at the site or sampling area. The water (and water with detergent) will be poured onto the ground if it contains less than 0.5 ug/l PCBs. Pesticide-grade solvents will be disposed of according to TSCA disposal regulations.

- Purged groundwater will be landscaped should screening using a PID exhibit total VOC concentrations below 5.0 ppm. Otherwise, the purged water will be placed into a 55-gallon drum for disposal as non-hazardous liquid waste.

9.0 SAMPLE DOCUMENTATION AND SHIPMENT

9.1 Field Notes and Photographs

Field logbooks will provide the means of recording the data collection activities and will be maintained on-Site and in the project files. As such, entries will be described in as much detail as possible so that persons going to the facility could reconstruct a particular situation without reliance on memory.

Field logbooks will be bound field survey books or notebooks. Logbooks will be assigned to field personnel, but will be stored in the project files when not in use. Each logbook will be identified by the project-specific document number.
The title page of each logbook will contain the following:

- Person to whom the logbook is assigned,
- The logbook number,
- Project name and number,
- Project start date, and
- End date.

Entries into the logbook will contain a variety of information. At the beginning of each entry, the date, start time, weather, names of all sampling team members present, and the signature of the person making the entry will be entered. The names of visitors to the site, field sampling or investigation team personnel, and the purpose of their visit, will also be recorded in the field logbook.

Field logbooks will be supplemented by standardized field measurement and sample collection forms. All measurements made and samples collected will be recorded. All entries will be made in permanent ink, signed, and dated and no erasures or obliterations will be made. If an incorrect entry is made, the information will be crossed out with a single strike mark, which is initialed and dated by the sampler. Whenever a sample is collected, or a measurement is made, a detailed description of the sampling location, which includes compass and distance measurements, or, latitude and longitude information (e.g., obtained by using a global positioning system) will be recorded. The number of photographs taken of the sampling location, if any, will be noted. Equipment used to make measurements will be identified, along with the date of calibration.

Photographs will be taken at the sampling locations and at other areas of interest on the site or sampling area. They will serve to verify information entered in the field logbook. For each photograph taken, the following information will be written in the logbook or recorded in a separate field photography log:

- Time, date, location, and weather conditions
- Description of the subject photographed

- Name of person taking the photograph

9.2 Labeling

All samples collected will be labeled in a clear and precise way for proper identification in the field and for tracking in the laboratory. The samples will have pre-assigned, identifiable, and unique numbers. Immediately upon collection, each sample will be labeled with an adhesive label. Each sample label will include the sample number, location, date/time of collection, and analysis. Samples will be assigned unique sample identifications as described below:

- Groundwater – Well ID or groundwater grab ID (e.g., MW7)
- Soil – Grab ID followed by the depth (e.g., PX07(4-6))
- Equipment blank – "EB" (e.g., EB). If multiple EBs are collected on the same day for differing types of sampling equipment, numerical designations will be used to differentiate the type of equipment blank (e.g., EB01, EB02), with the type of sampling equipment associated with each type of equipment blank documented in the field log book (e.g., EB01 collected from split spoon sampler, EB02 collected from Geoprobe® cutting shoe)
- Trip blank – "TB" (e.g., TB). If multiple TBs are collected on the same day for multiple coolers of VOC samples, numerical designations will be used to differentiate the different trip blanks (e.g., TB01-060112, TB02-060112). The cooler specific chain-of-custody forms will document which VOC samples are associated with the trip blanks.
- The last character of the sample ID will represent the sample type:

  2 - Field duplicate

An example of a complete sample ID would be MW10S-1 for a groundwater sample collected from monitoring well MW-10S on June 1, 2012. Samples being designated for MS/MSD analysis will not include an identifier as part of the sample code, but will be identified as such on the chain-of-custody.

9.3 Sample Chain-Of-Custody Forms and Custody Seals

Custody is one of several factors that are necessary for the admissibility of environmental data as evidence in a court of law. Custody procedures help to satisfy the two major requirements for admissibility: relevance and authenticity. Sample custody is addressed in two parts: field sample collection and laboratory analysis.
A sample is considered to be under a person's custody if:

- The item is in the actual possession of a person;
- The item is in the view of the person after being in actual possession of the person;

- The item was in the actual physical possession of the person but is locked up to prevent tampering;
- The item is in a designated and identified secure area.

Field Custody Procedures

The field sampler is personally responsible for the care and custody of the samples until they are transferred or dispatched properly. Field procedures have been designed such that as few people as possible will handle the samples.

All sample containers will be identified by the use of sample labels with sample numbers, sampling locations, date/time of collection, and type of analysis. Sample labels will be completed for each sample using waterproof ink unless prohibited by weather conditions. For example, a logbook notation would explain that a pencil was used to fill out the sample tag because the pen would not function in freezing weather.
Samples will be accompanied by a properly completed chain-of-custody form. The sample numbers and locations will be listed on the chain-of-custody form. When transferring the possession of samples, the individuals relinquishing and receiving will sign, date, and note the time on the record. This record documents the transfer of custody of samples from the sampler to another person, to the permanent laboratory, or to/from a secure storage location.

All sample shipments will be accompanied by the chain-of-custody record identifying the contents. The original record will accompany the shipment, and the back copy will be retained by the sampler and placed in the project files.

Field samples will be packed and shipped to the laboratory according to the following method. Samples will be properly packaged on ice at 4°C for shipment and dispatched to the laboratory for analysis, with a separate signed custody record enclosed in and secured to the inside top of each sample box or cooler. Shipping containers will be sealed and secured with strapping tape and custody seals for shipment to the laboratory. The custody seals will be attached to the front right and back left of the cooler and covered with clear plastic tape after being signed by field personnel. The cooler will be strapped shut with strapping tape in at least two locations.

If the samples are sent by common carrier, the waybill will be used. Waybills will be retained as part of the permanent documentation. Commercial carriers are not required to sign off on the custody forms since the custody forms will be sealed inside the sample cooler and the custody seals will remain intact.

Laboratory Custody Procedures

Samples will be received and logged in at the laboratory by a designated sample custodian or his/her designee. Upon sample receipt, the sample custodian will:

- Examine the shipping containers to verify that the custody tape is intact,
- Examine all sample containers for damage,
- Determine if the temperature required for the requested testing program has been maintained during shipment and document the temperature on the chain-of-custody form or in sample log-in records,

- Compare samples received against those listed on the chain-of-custody,
- Verify that sample holding times have not been exceeded,
- Examine all shipping records for accuracy and completeness,
- Determine if sample pH is adequate and whether any adjustments were required (if applicable) and record sample receipt form,
- Sign and date the chain-of-custody immediately (if shipment is accepted) and attach the waybill,
- Note any problems associated with the coolers and/or samples on the cooler receipt form and notify the Laboratory Project Manager, who will be responsible for contacting the client,
- Attach laboratory sample container labels with unique laboratory identification and analyses required, and
- Place the samples in the proper laboratory storage.

Following receipt, samples will be logged in according to the following procedure:

- The samples will be entered into the laboratory information management system (LIMS). At a minimum, the following information will be entered: project name or identification, unique sample identification numbers (both client and internal laboratory), type of sample, required analyses, and date and time of laboratory receipt of samples.
- The appropriate laboratory personnel will be notified of sample arrival.
- The completed chain-of-custody, waybills, and any additional documentation will be placed in the project file.

Specific details of laboratory custody procedures for sample receiving, sample identification, sample control, and record retention are described in the Laboratory QA Manual and laboratory SOPs.

10.0 QUALITY CONTROL

The following sections discuss the quality control samples that are being collected to support the sampling activity. This includes field QC samples, confirmation samples, background samples, laboratory QC samples, and split samples. Frequency of collection is discussed.

10.1 Field Quality Control Samples

Field QC samples will be collected to assess the accuracy and precision of the data. These samples will include field duplicates, equipment blanks, and trip blanks.

10.1.1 Assessment of Field Contamination (Blanks)

10.1.1.1 Equipment Blanks

Equipment blanks will be collected at a rate of one for every 20 field samples, per matrix, per sampling technique. Equipment blanks will be collected by pouring laboratory VOA-free water over the decontaminated sampling equipment, and collecting the rinsate into the appropriate sample containers. Equipment blanks will not be collected when dedicated sampling equipment is used (e.g., peristaltic pump with dedicated tubing).

10.1.1.2 Trip Blanks

Trip blanks will be included with each shipment of groundwater and soil samples collected for VOC analyses. Trip blanks associated with groundwater samples will originate in the laboratory and will be prepared by filling two 40-mL VOA vials with laboratory VOA-free water and the chemical preservative, and sealing the vials with septum-lined caps (allowing no headspace). Trip blanks associated with soil VOC samples will consist of one set of the soil VOA vials (i.e., two low level VOA vials and one high level VOA vial). Trip blanks will accompany the sample bottles to the site and will remain (unopened) in the shipping container until the sample bottles are received back at the laboratory.

10.1.1.3 Temperature Blanks

Temperature blanks will be included in each cooler, allowing the laboratory to determine the temperature of the shipment without disturbing the field samples. Temperature blanks will be prepared by filling a plastic or glass vial with water.

10.1.2 Assessment of Field Variability (Field Duplicate or Co-Located Samples)

Field duplicates will be collected at a frequency of one (1) field duplicate per 20 field samples, per matrix, per sampling technique. Field duplicates for solid samples will be collected by alternately filling two sets of identical sample containers from the interim container used to homogenize the sample. The soil will be homogenized in a sample-dedicated container (at least one-gallon). Homogenized material from the bucket will then be transferred to the appropriate wide-mouth glass jars for both the regular and duplicate samples. All jars designated for a

particular analysis (e.g., semi volatile organic compounds) will be filled sequentially before jars designated for another analysis are filled (e.g., metals).

For soil VOC samples, the field duplicate will be collected using the collection device (e.g., sample coring device) from the same areas as the parent sample (i.e., soil VOC samples are not homogenized). For aqueous samples, the parent sample and field duplicate sample containers will be filled in an alternating fashion (i.e., one parent sample container filled, one field duplicate container filled). All field duplicates will be analyzed for the same parameters as their associated samples.

Duplicate samples will be preserved, packaged, and sealed in the same manner as other samples of the same matrix. A separate sample number and station number will be assigned to each duplicate, and it will be submitted blind to the laboratory.

10.2 Laboratory Quality Control Samples

The analytical laboratories have a QC program in place to ensure the reliability and validity of the analysis performed at the laboratory. All analytical procedures are documented in writing as SOPs and each SOP includes the minimum requirements for the procedure. The internal QC checks differ slightly for each individual procedure and are outlined in the SOPs included in Appendix A. In general, they include:

- Blanks (method, reagent/preparation, instrument)
- MS/MSDs
- Surrogate spikes (organic analyses)
- Laboratory duplicates
- LCSs
- Internal standard area counts (gas chromatography/mass spectrometry [GC/MS] analyses)
- Endrin/DDT breakdown check standard results (pesticide and PCB – Aroclors only)
- Calibration check compounds
- Interference checks (ICP analysis)
- Serial dilutions (ICP analysis)
- Individual canister cleaning certification
- The control limits for precision and accuracy will be the laboratory limits current at the time of analyses.

A routinely collected soil sample (a full 8-oz sample jar or two 120-mL sample vials) contains sufficient volume for both routine sample analysis and additional laboratory QC analyses. Therefore, a separate soil sample for laboratory QC purposes will not be collected.

For water samples, double volumes of samples are supplied to the laboratory for its use for QC purposes. Two sets of water sample containers are filled and all containers are labeled with a single sample number.

11.0 FIELD HEALTH AND SAFETY PROCEDURES

A project specific health and safety plan is included in the CMI.

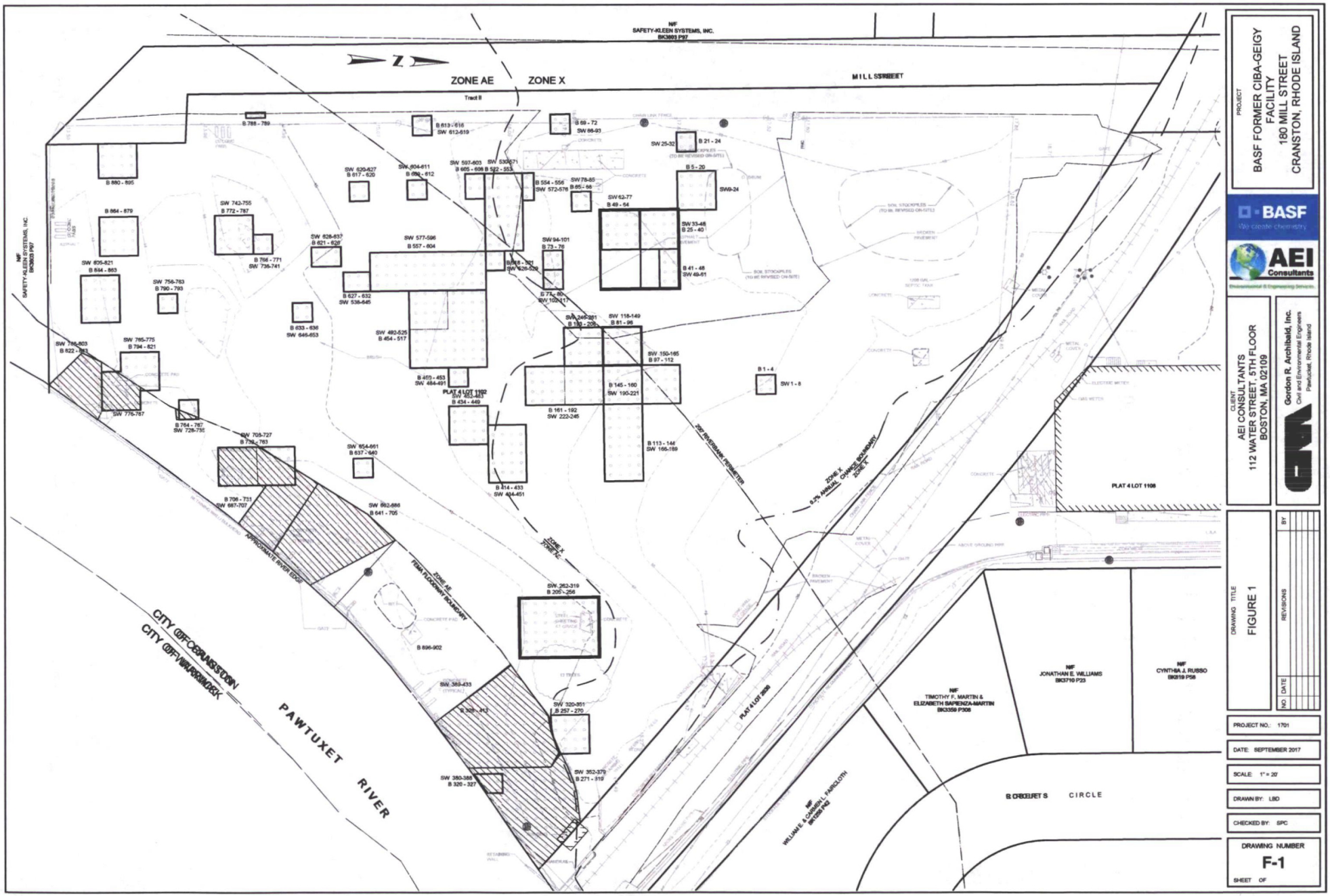

PROJECT
BASF FORMER CIBA-GEIGY FACILITY
180 MILL STREET
CRANSTON, RHODE ISLAND

BASF
We create chemistry

AEI Consultants
Environmental & Engineering Services

CLIENT
AEI CONSULTANTS
112 WATER STREET, 5TH FLOOR
BOSTON, MA 02109

Gordon R. Archibald, Inc.
Civil and Environmental Engineers
Pawtucket, Rhode Island

DRAWING TITLE
FIGURE 1

NO	DATE	REVISIONS	BY

PROJECT NO.: 1701

DATE: SEPTEMBER 2017

SCALE: 1" = 20'

DRAWN BY: LBD

CHECKED BY: SPC

DRAWING NUMBER
F-1

SHEET OF

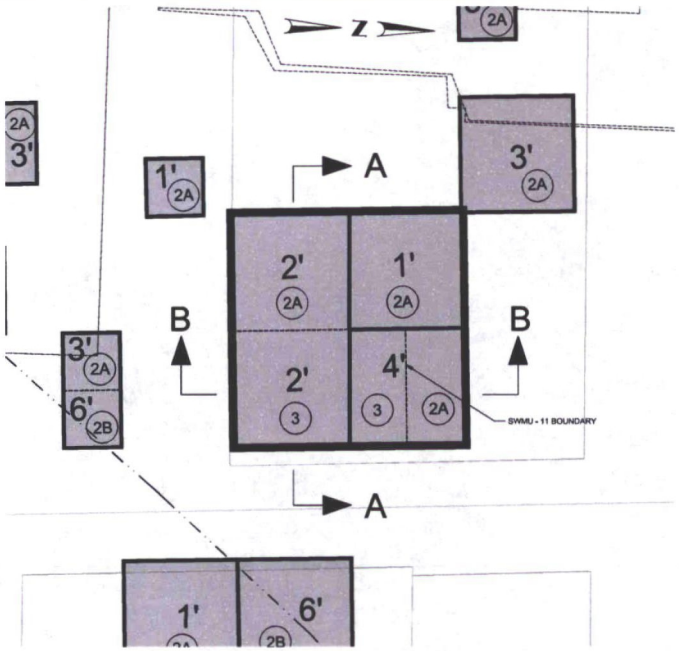

SWMU - 11 EXCAVATION PLAN

SCALE: 1" = 10'

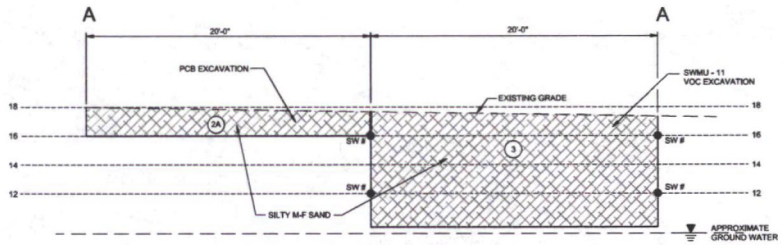

SECTION A - A

SCALE: 1" = 4'

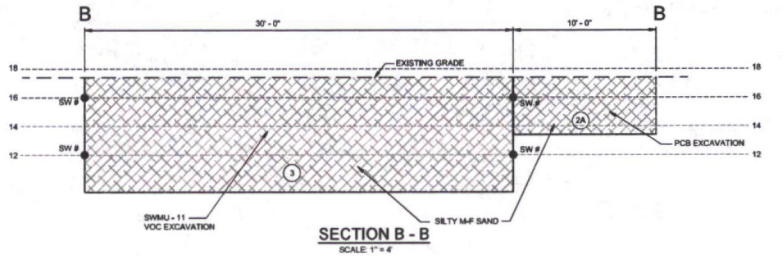

SECTION B - B

SCALE: 1" = 4'

SOIL TYPE LEGEND

1A	RES DEC
1B	PCBS 10 PPM
1C	PCBS _ 10 PPM - _ 25 PPM
2A	PCBS ¯ 25 PPM - ¯ 50 PPM
2B	PCBS 50 PPM - 100 PPM
2C	PCBS ¯ 100 PPM
3	HAZARDOUS

GENERAL NOTE:
SIDEWALL SAMPLES COLLECTED FOR VOCS (8260B) AND PCBS (8082A). SAMPLE INTERVALS TO BE EVERY 4' UNTIL BOTTOM OF EXCAVATION. VOCS COLLECTED AS DISCRETE SAMPLES AT HIGHEST PID POINT. PCBS COLLECTED AS COMPOSITE SAMPLE IN SAMPLE INTERVAL

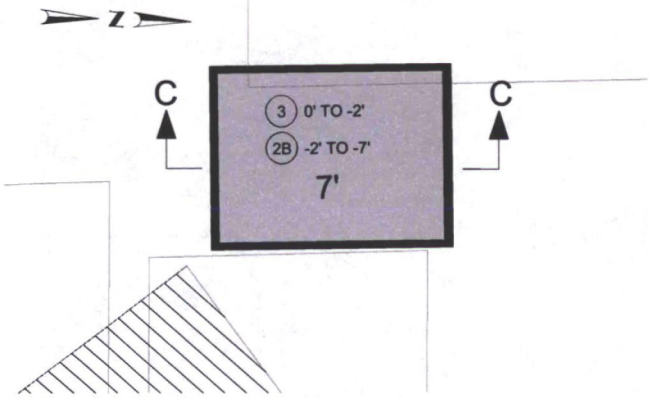

SWMU - 8 EXCAVATION PLAN

SCALE: 1" = 10'

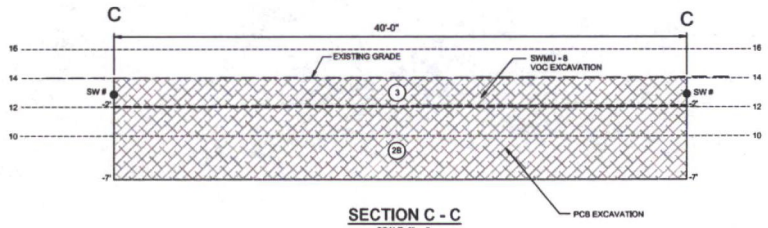

SECTION C - C

SCALE: 1" = 4'

PROJECT
BASF FORMER CIBA-GEIGY FACILITY
180 MILL STREET
CRANSTON, RHODE ISLAND

BASF
We create chemistry

AEI Consultants
Environmental & Engineering Services

CLIENT
AEI CONSULTANTS
112 WATER STREET, 5TH FLOOR
BOSTON, MA 02109

Gordon R. Archibald, Inc.
Civil and Environmental Engineers
Pawtucket, Rhode Island

DRAWING TITLE
FIGURE 2

NO	DATE	REVISIONS	BY

PROJECT NO.: 1701

DATE: SEPTEMBER 2017

SCALE: NONE

DRAWN BY: LBD

CHECKED BY: SPC

DRAWING NUMBER
F-2

SHEET OF

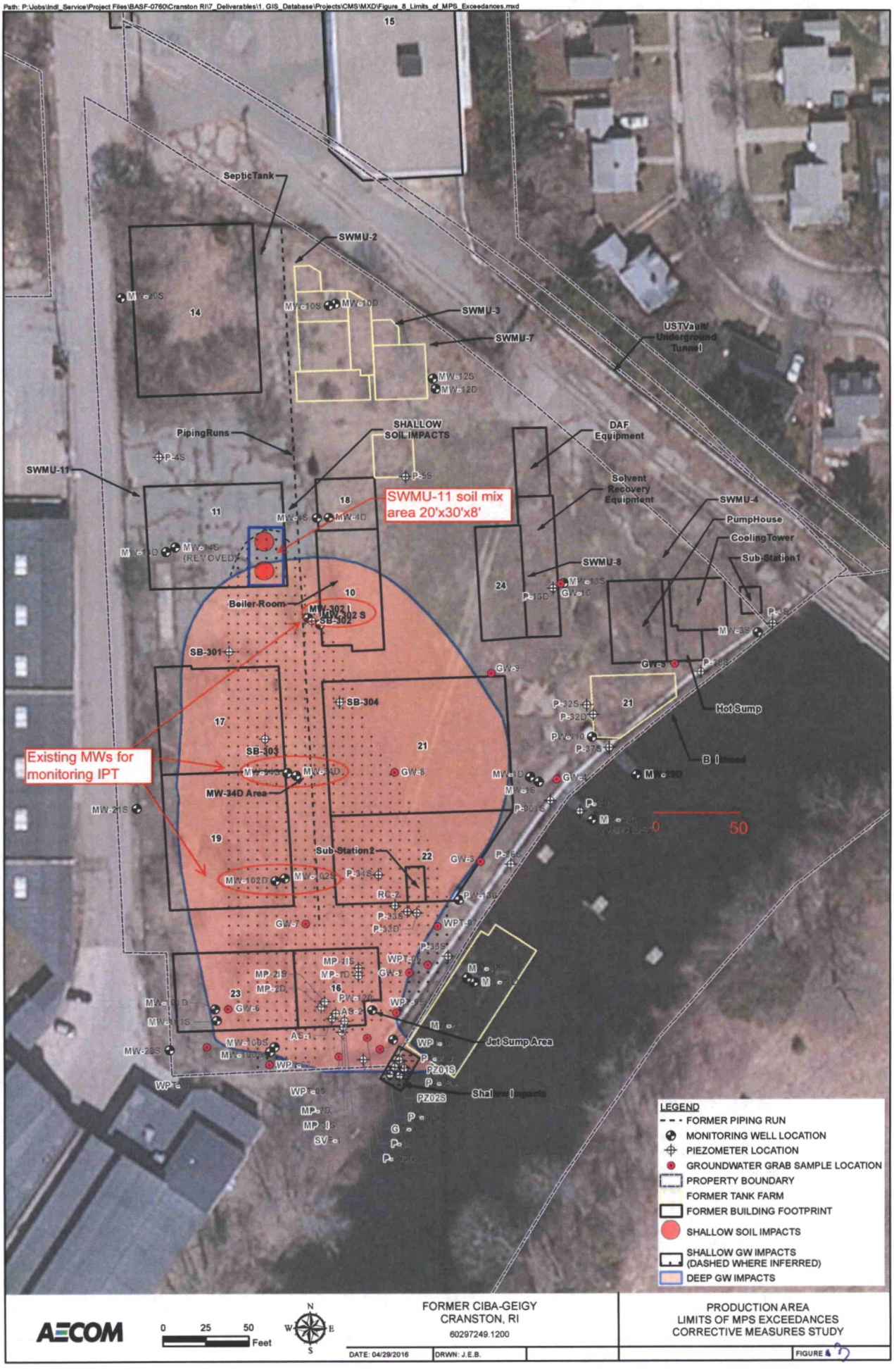
Path: P:\Jobs\Indl_Service\Project Files\BASF-0760\Cranston RI\7_Deliverables\1_GIS_Database\Projects\CMS\MXD\Figure_8_Limits_of_MPS_Exceedances.mxd
SepticTank
SWMU-2
SWMU-3
SWMU-7
USTVault/ Underground Tunnel
PipingRuns
SHALLOW SOIL IMPACTS
DAF Equipment
SWMU-11
SWMU-11 soil mix area 20'x30'x8'
Solvent Recovery Equipment
SWMU-4
PumpHouse
CoolingTower
Sub-Station1
SWMU-8
Boiler-Room
SB-301
SB-304
Hot Sump
Existing MWs for monitoring IPT
MW-34D Area
Sub-Station2
Jet Sump Area
Shallow Impacts
0
50
LEGEND
FORMER PIPING RUN
MONITORING WELL LOCATION
PIEZOMETER LOCATION
GROUNDWATER GRAB SAMPLE LOCATION
PROPERTY BOUNDARY
FORMER TANK FARM
FORMER BUILDING FOOTPRINT
SHALLOW SOIL IMPACTS
SHALLOW GW IMPACTS (DASHED WHERE INFERRED)
DEEP GW IMPACTS
AECOM
0 25 50 Feet
N
W
E
S
FORMER CIBA-GEIGY
CRANSTON, RI
60297249.1200
PRODUCTION AREA
LIMITS OF MPS EXCEEDANCES
CORRECTIVE MEASURES STUDY
DATE: 04/29/2016
DRWN: J.E.B.
FIGURE 8

Appendix A

Quality Assurance Project Plan

AEI Consultants

September 7, 2017

QUALITY ASSURANCE PROJECT PLAN (QAPP) For LOT 1102 CORRECTIVE MEASURES IMPLEMENTATION WORK PLAN

Property Identification:
Former Ciba-Geigy Facility
180 Mill Street
Cranston, Rhode Island

Prepared for:
BASF Corporation
100 Park Avenue
Florham Park, New Jersey

Prepared by:
AEI Consultants
112 Water Street, 5th Floor
Boston, Massachusetts

Prepared By: _____ Date: _____
Aaron Ting
AEI Field Team Leader

Reviewed By: _____ Date: _____
Rick Kowalski
AEI Project Manager

Approved By: _____ Date: _____
Frank Battaglia
USEPA Project Manager

Approved By: _____ Date:
Joseph Guarnaccia
BASF Project Manager

Distribution List

USEPA Project Manager, Frank Battaglia

TSCA Project Manager, Kim Tisa

BASF Project Manager, Dr. Joseph Guarnaccia

AEI Principal, Stephen Graham

AEI Project Manager, Rick Kowalski

AEI Quality Assurance Officer, Dr. Robert Palermo

AEI Field Team Leader, Aaron Ting

ESS Project Manager, Laurel Stoddard

Contents

A.0 PROJECT MANAGEMENT 1
A.1 Introduction 1
A.2 Project Schedule 1
A.3 Distribution List 1
A.4 Project/ Task Organization 1
A.4.1 Management Responsibilities 2
A.4.2 Quality Assurance Responsibilities 2
A.4.3 Laboratory Responsibilities 3
A.4.4 Field Responsibilities 3
A.5 Problem Definition and Background 4
A.5.1 Site History 4
A.5.2 Site Description 4
A.5.3 Problem Definition 5
A.6 Project / Task Description 5
A.7 Quality Objectives and Criteria for Measurement Data 6
A.7.1 Project Quality Objectives 6
A.7.2 Data Quality Objectives for Measurement Data 7
A.8 Special Training/Certifications 9
A.8.1 Training 9
A.8.2 Certifications 9
A.9 Documents and Records 9
A.9.1 Project Files 9
A.9.2 Field Records 10
A.9.3 Laboratory Records and Deliverables 10
A.10 References 11
B.0 MEASUREMENT/DATA ACQUISITION 16
B.1 Sampling Process Design 16
B.2 Sampling Methods 16
B.2.1 Field Measurements 16
B.2.2 Soil Sampling Procedures 17
B.2.3 Groundwater Sampling Procedures 17
B.2.4 Concrete Sample Procedures 19
B.2.5 Quality Control Sample Collection 19
B.2.6 Equipment Decontamination 21
B.3 Sample Handling and Custody 21
B.3.1 Sample Containers, Preservation, and Holding Times 21
B.3.2 Sample Labeling 21
B.3.3 Custody Procedures 22
B.3.4 Packaging and Shipping 24
B.4 Analytical Methods 24
B.5 Quality Control 25
B.5.1 Field 25
B.5.2 Laboratory 25
B.6 Instrument/Equipment Testing, Inspection, and Maintenance 25
B.7 Instrument/Equipment Calibration and Frequency 26
B.8 Inspection/Acceptance of Supplies and Consumables 26
B.9 Non-direct Measurements 27
B.10 Data Management 27

C.0 ASSESSMENT/OVERSIGHT 32
C.1 Assessment and Response Actions 32
C.1.1 Assessments 32
C.1.2 Response Actions 33
C.2 Reports to Management 34
D.0 DATA VALIDATION/DATA USABILITY 35
D.1 Data Review, Verification, and Validation 35
D.1.1 Field Data 35
D.1.2 Internal Laboratory Review 35
D.1.3 Validation of Analytical Data 35
D.2 Verification and Validation Methods 36
D.2.1 Field Data Verification 36
D.2.2 Laboratory Data Verification 36
D.2.3 Validation of Analytical Deliverables 37
D.2.4 Verification During Data Management 37
D.3 Reconciliation with User Requirements 38
D.3.1 Comparison to Measurement Objectives 38
D.3.2 Comparison to Project Objectives 39

List of Tables

Table A-1. Analyte Lists And Reporting Limits For Soil And Groundwater 12
Table B-1. Sample Container, Preservation, and Holding Time Requirement 29
Table B-2. Analytical Methodologies 30
Table B-3. Laboratory Preparation and Analytical SOPs 31

List of Figures

Figure B-1. Example of chain of custody form 28

Attachments

Attachment 1 – Field Standard Operating Procedures
Attachment 2 – Laboratory Standard Operating Procedures
Attachment 3 – Laboratory QA Manual
Attachment 4 – Dexsil L2000DX PCB/Chloride Analyzer Manual

Acronyms

CMI – Corrective Measures Implementation
COC – Contaminant of Concern
DQO – Data Quality Objectives
EDD – Electronic Data Deliverable
ELUR – Environmental Land Use Restriction
FEMA – Federal Emergency Management Agency
FPA – Former Production Area
ISCO – In-Situ Chemical Oxidation
MQO – Measurement Quality Objectives
PCBs – Polychlorinated Biphenyls
QA/QC – Quality Assurance / Quality Control
R-DEC – Residential Direct Exposure Concentrations (RIDEM)
RIDEM – Rhode Island Department of Environmental Monitoring
SAP – Sample and Analysis Plan
SOP – Standard Operating Procedure
TSCA – Toxic Substance Control Act
USEPA – U.S. Environmental Protection Agency
VOCs – Volatile Organic Compounds

A.0 Project Management

A.1 Introduction

AEI Consultants (AEI) was contracted by BASF to perform construction phase services for the remediation of Lot 1102 (former production area [FPA]) located at 180 Mill Street, Cranston, Rhode Island (the Site). The objectives for the Site remedial approach are included in a Corrective Measures Implementation (CMI) Work Plan. The major elements of the CMI include: removal and disposal of polychlorinated biphenyls (PCB)-impacted soils greater than 25 mg/kg, design and implementation of an engineered cap to address direct contact exposure for current and future Site receptors, implementation of an Environmental Land Use Restriction (ELUR) limiting future use/development of the Site, and implementation of a groundwater treatment/monitoring program. As part of the CMI Work Plan, AEI has prepared this Quality Assurance Project Plan (QAPP), which presents the organization, objectives, planned activities, and specific quality assurance/quality control (QA/QC) procedures for this project. A Site Survey Map (**Figure 1**) is provided as part of the CMI Work Plan.

The data generated during and following the remedial activities is intended to provide the United States Environmental Protection Agency (USEPA) and BASF with data necessary to show the soil and groundwater metrics have been achieved for compliance with Site-specific standards. The methods, results, and other information associated with the remedial activities will be incorporated into Closure Reports for the Site.

Specific protocols for sampling, sample handling and storage, chain-of-custody, and laboratory and field analyses are described herein. This QAPP has been prepared by AEI, in accordance with the EPA QAPP policy as presented in EPA Requirements for Quality Assurance Project Plans (EPA QA/R-5, March 2001), and includes QAPP elements as set forth in EPA Guidance for Quality Assurance Project Plans (EPA QA/G-5, December 2002).

A.2 Project Schedule

It is anticipated that soil sampling activities will take place in 2017. Groundwater sampling, as part of the in-situ chemical oxidation (ISCO) progress monitoring, is expected to take place in 2017, 2018 and beyond.

A.3 Distribution List

This QAPP, and any subsequent revisions, will be distributed to the personnel shown on the Distribution List that immediately follows the approval page (Cover page 2).

A.4 Project/ Task Organization

The responsibilities of key personnel are described below.

A.4.1 Management Responsibilities

United States Environmental Protection Agency (USEPA) Project Manager

The USEPA Project Manager, Mr. Frank Battaglia, has the overall regulatory responsibility for all phases of the project.

Toxic Substance Control Act (TSCA) Project Manager

The TSCA Project Manager, Ms. Kim Tisa, has overall regulatory responsibility for the PCB TSCA compliance phase of the project.

BASF Project Manager

The BASF Project Manager, Dr. Joseph Guarnaccia will review all documents before submission to the regulatory agencies.

AEI Principal

The AEI Principal, Mr. Stephen Graham, PE, LSP, will provide final corporate approval for technical□ schedule□and cost aspects of project□ensures AEI Project Manager has all resources needed□and responsible for client satisfaction..

AEI Project Manager

The AEI Project Manager, Mr. Richard Kowalski, CPG, LSP, CHMM, has responsibility for day-to-day management of technical and scheduling matters related to the project. Other duties, as necessary, of the AEI Project Manager include:

- Subcontractor procurement,
- Assignment of duties to project staff and orientation of the staff to the specific needs and requirements of the project,
- Ensuring that data assessment activities are conducted in accordance with the QAPP,
- Approval of project-specific procedures and internally prepared plans, drawings, and reports,
- Serving as the focus for coordination of all field and laboratory task activities, communications, reports, and technical reviews, and other support functions, and facilitating Site activities with the technical requirements of the project, and
- Maintenance of the project files.

A.4.2 Quality Assurance Responsibilities

AEI Project Quality Assurance (QA) Officer

The AEI Project QA Officer, Dr. Robert Palermo, has overall responsibility for QA oversight. The AEI Project QA Officer communicates directly to the AEI Project Manager. Specific responsibilities include:

- Preparing the QAPP,
- Reviewing and approving QA procedures, including any modifications to existing approved procedures,
- Ensuring that QA audits of the various phases of the project are conducted as required,
- Providing QA technical assistance to project staff,

- Ensuring that data validation/data assessment is conducted in accordance with the QAPP, and
- Reporting on the adequacy, status, and effectiveness of the QA program to the AEI Project Manager.

A.4.3 Laboratory Responsibilities

ESS Laboratories of Cranston, Rhode Island will perform the chemical analyses of all soil and groundwater samples.

Laboratory Manager

The Laboratory Manager, Ms. Michelle Mirenda, is ultimately responsible for the data produced by the laboratory. Specific responsibilities include:

- Implementing and adhering to the laboratory QA manual and all corporate policies and procedures within the laboratory,
- Approving the standard operating procedures (SOPs),
- Maintaining adequate staffing documented on organization charts, and
- Implementing internal/external audit findings corrective actions.

Laboratory QA Coordinator

The Laboratory QA Coordinator, Jim Badger, reports to the Laboratory Manager. Specific responsibilities include:

- Approving SOPs,
- Assessing and maintaining the laboratory QA manual implementation within the facility operations,
- Recommending resolutions for ongoing or recurrent non-conformances within the laboratory,
- Performing QA assessments, and
- Reviewing and approving corrective action plans for non-conformances, tracking trends of non-conformances to detect systematic problems, and initiating additional corrective actions as needed.

Laboratory Project Manager

The Laboratory Project Manager is Ms. Laurel Stoddard. She is the primary point of contact between the laboratory and AEI. Specific responsibilities of the Laboratory Project Manager include:

- Monitoring analytical and QA project requirements for a specified project,
- Acting as a liaison between the client and the laboratory staff,
- Reviewing project data packages for completeness and compliance to client needs, and
- Monitoring, reviewing, and evaluating the progress and performance of projects.

A.4.4 Field Responsibilities

AEI Field Team Leader

The AEI Field Team Leader, is Mr. Aaron Ting. He has overall responsibility for completion of all field activities in accordance with the QAPP and is the communication link between AEI project management and the field team. Specific responsibilities of the AEI Field Team Leader include:

- Overseeing contractors and coordinating sampling and analysis activities at the Site,
- Assigning specific duties to field team members,
- Mobilizing and demobilizing of the field team and subcontractors to and from the Site,
- Directing the activities of subcontractors on Site,
- Resolving any logistical problems that could potentially hinder field activities, such as equipment malfunctions or availability, personnel conflicts, or weather dependent working conditions,
- Implementing field QC including issuance and tracking of measurement and test equipment; the proper labeling, handling, storage, shipping, and chain-of-custody procedures used at the time of sampling; and control and collection of all field documentation, and
- Communicating any non-conformances or potential data quality issues to AEI project management.
- Conducting the health and safety tailgate meetings□subcontractor site orientation□one of the points of contact for general safety-related □uestions. The Contractor □ill be the point of contact in regards to their health and safety plan.

AEI field staff

The field staff reports directly to the AEI Field Team Leader, although the Field Team Leader in some cases will be conducting some of the duties of the field staff as listed below. The responsibilities of the field team include:

- Collecting samples, conducting field measurements, and decontaminating equipment according to documented procedures stated in the QAPP,
- Ensuring that field instruments are properly operated, calibrated, and maintained, and that adequate documentation is kept for all instruments,
- Collecting the required QC samples and thoroughly documenting QC sample collection,
- Ensuring that field documentation and data are complete and accurate, and
- Documenting and communicating any nonconformance or potential data quality issues to the AEI Field Team Leader.

A.5 Problem Definition and Background

Sampling will be conducted at the Site in order to show compliance with approved soil and groundwater metrics as stipulated in the CMI Work Plan.

A.5.1 Site History

Refer to Section 2.1 of the CMI Work Plan for Site history information.

A.5.2 Site Description

The Site is a Former Ciba-Geigy Facility situated on a 5.5-acre elongated parcel of land, located at 180 Mill Street in Cranston, Rhode Island. It is bounded by residential properties on Mill Street and Sunset

Terrace to the north, Mill Street and the Safety Kleen property to the west, the Pawtuxet River to the south, and residences on Robert Circle to the east. The 3.25-acre FPA, which is the focus of the remedial activities, is bounded to the west by Mill Street (beyond which are industrial properties), to the north and east by a BASF-owned property which includes a former railroad spur (Lot 2630) beyond which are former Site buildings and residences, and to the south and east by the Pawtuxet River.

A.5.3 Problem Definition

The primary objectives of the CMI are to:

1) Eliminate direct contact to impacted soil through excavation and off-Site disposal of soils containing greater than 25 mg/kg PCBs. Shallow soils containing greater than 10 mg/kg PCBs will be covered using an engineered barrier (soil cap with underlying permeable geotextile layer), while remaining soils containing greater than 1 mg/kg PCBs shall receive a "clean" soil cap;
2) Eliminate migration of contaminants of concern (COC) by reducing PCB concentrations in groundwater through "hot spot" removal of highly impacted soils, and treating volatile organic compounds (VOCs) in groundwater using ISCO persulfate and ozone barrier technologies in pilot studies and ultimately full-scale implementation.

A.6 Project / Task Description

The field work for the CMI will be conducted in two phases. The first phase will include an Interim Remedial Measure (IRM) to remove and dispose of PCB- and VOC-impacted soils at the Site, and the second phase will be to implement an ISCO pilot program in the upland northwestern (SWMU 11) and southern eastern (TP-5) portions of the Site. Collection of groundwater grab samples, depth-to-groundwater measurements, and groundwater samples for field screening and laboratory analyses will occur to monitor progress of the ISCO program. Monitoring points for both the soil and the ISCO groundwater progress monitoring are included in **Figures 1 and 2** of the Sampling and Analysis Plan (SAP).

For most of the Site, the collection of soil grab samples will be conducted in a manner consistent with the TSCA 40 CFR 761.380 Subpart O post-excavation verification sampling plan. Soil samples will be analyzed for PCBs using the Methods specified in a separate section of this QAPP. A 20-foot by 30-foot area in the vicinity of SWMU-11 will be excavated for PCB- and VOC-impacted soils. Compliance sampling in this area will involve both TSCA PCB sampling and the collection of VOC grab samples. VOC grab samples will be collected at a frequency of 1 sample per every 25 linear feet of sidewall and 1 sample for every 625 square feet of excavation bottom. Samples for both PCBs and VOCs will be collected from the midpoint of the sidewall excavation depth and from the base of the excavation.

After the removal of the PCB- and VOC-impacted soils and post-excavation verification sampling shows compliance with the applicable soil cleanup goals (i.e., PCBs less than 25 mg/kg for the Site and less than 1 mg/kg in the FEMA Floodway, and VOC toluene less than 54 mg/kg in SWMU-11 excavation), the second phase of field work will include backfilling and installation of a 2-foot thick soil cap with underlying permeable geotextile. The geotextile will be used in areas where concentrations of PCBs remain in soil above 10 mg/kg. In areas where soil concentrations are less than 10 mg/kg PCBs, but are greater than 1 mg/kg PCBs, a 2-foot thick soil cap only will be placed. No collection of soil or groundwater samples are anticipated as part of the capping implementation phase. Also during this phase, additional ISCO activities will occur, if pilot efforts do not reduce VOCs to applicable cleanup goals.

The locations of any additional soil and groundwater samples will be determined based on a review of field and laboratory data obtained during the field programs.

A.7 Quality Objectives and Criteria for Measurement Data

A.7.1 Project Quality Objectives

The objectives of the CMI are:

1. To implement soil remedial actions by collecting and evaluating soil data to verify that final PCB concentrations in soil meet the risk-based compliance goals for the IRM,
2. To implement ISCO pilot testing and, as needed, full scale remedial programs, and conduct groundwater testing to verify post-program concentrations meet cleanup goals, and
3. To collect and evaluate soil and groundwater data to support a human health risk evaluation and regulatory closure of the Site.

Depending upon project schedule and cost considerations, field screening data may be used to establish the presence or absence of PCB concentrations in soil using a field extraction technology (EPA Method 9078, see **Attachment 1**). Additionally, field screening for VOCs using photoionization detector (PID) instrumentation and visual observations will be used by the field team to evaluate and adjust excavation depths and locations as needed. This approach to the field investigation is a key component of a dynamic CMI.

The individual analytes and laboratory reporting limits (RLs) for each parameter are presented in **Table A-1**. The applicable screening levels that will be used to evaluate the analytical results are also presented in **Table A-1**. The analytical methods are presented in **Table B-2**.

The design of the AEI CMI was based on the USEPA data quality objectives (DQO) process, a multi-step, iterative process that ensures that the type, quantity, and quality of environmental data used in decision making is appropriate for its intended application. The DQO process is summarized below.

DQO Step	Description
State the Problem	Releases or spills to the environment have occurred from historical operations.
Identify the Decision	Remediate PCB soil contamination to minimize exposure risk through removal where needed and capping; treat and address COC migration to the Pawtuxet River through soil removal and ISCO persulfate injections and ozone reactive barrier technologies.

DQO Step	Description
Identify Inputs to the Decision	• Monitoring well water level measurements • Groundwater water quality measurements • Monitoring well groundwater sample chemical data for parameters listed in CMI • Soil sample laboratory chemical data for parameters listed in CMA • Headspace screening of soil samples for total VOCs during excavation and soil sampling • Dexsil PCB-in-soil screening kits to evaluate PCB concentrations in soil during excavation and soil sampling
Define Study Boundaries	Lot 1102 (the Site)
Develop a Decision Rule	The results of the sampling program will be used to meet the DQOs stated in Section A.7.1.
Specify Decision Error Limits	The data will be considered acceptable if it is collected according to the CMI and QAPP and it meets the applicable screening levels and data validation criteria.
Optimize the Study Design	Data collected will be used to prepare a formal statistical evaluation (Risk Assessment). Dynamic work strategies for optimizing the sample design will be also used.

A.7.2 Data Quality Objectives for Measurement Data

Precision

Precision is a measure of the degree to which two or more measurements are in agreement. Field precision is assessed through the collection and measurement of field duplicates at a rate of one duplicate per twenty analytical samples, per matrix, per sampling technique.

Precision will be measured through the calculation of a relative percent difference (RPD) for each duplicate pair. The objective for field precision RPDs is less than or equal to 30 percent (%) for aqueous samples, and less than or equal to 50% for solid samples, where results are reported at greater than 5 times the RL.

Precision in the laboratory is assessed through the calculation of RPD for duplicate samples, either as matrix spike/matrix spike duplicates (MS/MSDs) or as laboratory duplicates. The precision objectives, as measured by RPDs, will be the control limits generated by the laboratories that are current at the time of analyses.

Accuracy

Accuracy is the degree of agreement between the observed value and an accepted reference or true value. Accuracy in the field is assessed through the use of trip blanks and equipment blanks and through the adherence to all sample handling, preservation, and holding time requirements. The objective for trip blanks and equipment blanks is that no target compounds are present above the RL. Sampling preservation and holding time requirements are provided in **Table B-1**.

Laboratory accuracy is assessed through the analysis of laboratory method blanks, and spiked samples such as MS/MSDs, laboratory control samples (LCS), and surrogate compounds. Method blanks should not contain any target compounds above the RLs. For spiked samples, the accuracy objectives, as

measured by percent recoveries (%Rs) will be the control limits generated by the laboratories that are current at the time of analyses.

Completeness

Completeness is a measure of the amount of valid data obtained from a measurement system compared to the amount that was expected to be obtained under normal conditions. "Normal conditions" are defined as the conditions expected if the sampling plan was implemented as planned.

Field completeness is a measure of the amount of valid samples obtained during all sampling for the project. The field completeness objective is greater than 90%.

Laboratory completeness is a measure of the amount of valid measurements obtained from all the measurements taken in the project. The laboratory completeness objective is greater than 95%.

Sensitivity

Sensitivity of analytical data is demonstrated by laboratory RLs and Method Detection Limits (MDLs). The target RLs for the analytes to be analyzed are presented in **Table A-1 and Table A-2**. The RLs for the actual samples may require adjustment by the laboratory due to analytical dilutions, sample volume, or sample matrix.

RLs were selected in part by consideration of the data quality levels (DQLs) to be achieved and in part by consideration of the actual ability of the laboratory to attain RLs at the DQLs. Selected Ion Monitoring (SIM) will be performed for polycyclic aromatic hydrocarbon (PAH) analyses to obtain lower RLs. Not all risk-based target analyte DQLs are obtainable using the RLs of conventional EPA methods.

To maximize the usability of the data, any analytes detected below the RL and above the MDL will be reported by the laboratory as estimated ("J") values.

Comparability

Comparability expresses the confidence with which one data set can be compared to another. Comparability is dependent upon the proper design of the sampling program and will be satisfied by ensuring that the protocols described in this QAPP are followed and that proper sampling techniques are used. Planned analytical data will be comparable when similar sampling and analytical methods are used as documented in the QAPP.

Representativeness

Representativeness expresses the degree to which data accurately and precisely represents a characteristic of a population, parameter variations at a sampling point, a process condition, or an environmental condition within a defined spatial and/or temporal boundary.

Representativeness is ensured through the design of the sampling program and will be satisfied by ensuring that the CMI and QAPP are followed and that proper sampling techniques are used. Within the laboratory, representativeness will be ensured by the use of appropriate methods, conformance to the approved analytical procedures, and adherence to sample holding times.

A.8 Special Training/Certifications

A.8.1 Training

This investigation includes routine field sampling techniques, field measurements, and laboratory analyses. No specialized training is therefore necessary. Prior to starting work, personnel will be given instruction specific to the project, covering the following areas:

- Organization and lines of communication and authority,
- Overview of the scope of work,
- QA/QC requirements,
- Documentation requirements, and
- Health and safety requirements.

Instructions will be provided by the AEI Project Manager, AEI Field Team Leader, and AEI Project QA Officer.

A.8.2 Certifications

The chemical analysis laboratories hold National Environmental Laboratory Accreditation Program (NELAP) accreditation and Rhode Island Department of Health certification, where applicable.

A.9 Documents and Records

A.9.1 Project Files

The project files will be the central repository for all documents which constitute evidence relevant to sampling and analysis activities as described in this QAPP. AEI is the custodian of the project files and will maintain the contents of the project files for the investigation, including all relevant records, reports, logs, field notebooks, pictures, subcontractor reports, and data reviews in a secured, limited access area and under custody of the AEI Project Manager. Ultimately, this information will be transmitted electronically to BASF for permanent storage.

The project files will include at a minimum:

- Field logbooks,
- Field data and data deliverables,
- Photographs,
- Drawings,
- Sample collection logs,
- Laboratory data deliverables,
- Data validation reports,
- Data assessment reports,
- Access/Legal agreements with property owners,
- A copy of final plans and other documents,
- Progress reports, QA reports, interim project reports, etc.,
- All custody documentation (tags, forms, airbills, etc.)

Records will be retained for a minimum of six years or the duration requested by USEPA.

A.9.2 Field Records

Field logbooks will provide the means of recording the data collection activities and will be maintained on-Site and in the project files. As such, entries will be described in as much detail as possible so that persons going to the facility could reconstruct a particular situation without reliance on memory.

Field logbooks will be bound field survey books or notebooks. Logbooks will be assigned to field personnel, but will be stored in the project files when not in use. Each logbook will be identified by the project-specific document number.

The title page of each logbook will contain the following:

- Person to whom the logbook is assigned,
- Logbook number,
- Project name and number,
- Project start date, and
- End date.

Entries into the logbook will contain a variety of information. At the beginning of each entry, the date, start time, weather, names of all sampling team members present, and the signature of the person making the entry will be entered. The names of visitors to the Site, field sampling or investigation team personnel, and the purpose of their visit will also be recorded in the field logbook.

Field logbooks will be supplemented by standardized field measurement and sample collection forms. All measurements made and samples collected will be recorded. All entries will be made in permanent ink, signed, and dated and no erasures or obliterations will be made. If an incorrect entry is made, the information will be crossed out with a single strike mark, which is initialed and dated by the sampler. Whenever a sample is collected or a measurement is made, a detailed description of the sampling location, which includes compass and distance measurements or latitude and longitude information (e.g., obtained by using a global positioning system), will be recorded. The number of photographs taken of the sampling location, if any, will be noted. Equipment used to make measurements will be identified, along with the date of calibration.

Photographs will be taken at the sampling locations and at other areas of interest on the Site or sampling area. They will serve to verify information entered in the field logbook. For each photograph taken, the following information will be written in the logbook or recorded in a separate field photography log:

- Time, date, location, and weather conditions,
- Description of the subject photographed, and
- Name of person taking the photograph.

A.9.3 Laboratory Records and Deliverables

Laboratory data reduction procedures will be performed according to the following protocol:

- All information related to analysis will be documented in controlled laboratory logbooks, instrument printouts, or other approved forms.
- All entries that are not generated by an automated data system will be made neatly and legibly in permanent, waterproof ink.

- Information will not be erased or obliterated. Corrections will be made by drawing a single line through the error and entering the correct information adjacent to the cross-out. All changes will be initialed, dated, and, if appropriate, accompanied by a brief explanation.
- Unused pages or portions of pages will be crossed out to prevent future data entry.
- Analytical laboratory records will be reviewed by the supervisory personnel on a regular basis, and by the Laboratory QA Coordinator periodically, to verify adherence to documentation requirements.

The standard laboratory turnaround time will be five to seven business days for all parameters. The laboratory will provide a hard copy report as a PDF file and an electronic data deliverable (EDD). The EDD will be provided as text files in AEI-specific EQuIS® format. The data packages will be CLP-like reports containing QC summary forms and all raw data and will be completely paginated and bookmarked. All text in the reports should be electronically searchable.

A.10 References

This QAPP was prepared using the following documents:

AEI, 2017. Corrective Measures Implementation Work Plan, Former Ciba-Geigy Facility, Cranston, Rhode Island. August 2017.

United States Environmental Protection Agency, 2008. Region I, U.S. EPA Inorganic Data Validation Functional Guidelines, November.

United States Environmental Protection Agency, 1996. Region I, U.S. EPA-New England Data Validation Functional Guidelines for Evaluating Environmental Analyses. Final Draft. Office of Environmental Measurement and Evaluation. October.

United States Environmental Protection Agency, 2001. Quality Staff. EPA Requirements for Quality Assurance Project Plans, EPA QA/R-5. EPA/240/B-01/003. March.

United States Environmental Protection Agency, 2006. Quality Staff. Guidance on Systematic Planning Using the Data Quality Objectives Process, EPA QA/G-4. EPA/240/B-06/001. February.

United States Environmental Protection Agency, 2002. Quality Staff. EPA Guidance for Quality Assurance Project Plans, EPA QA/G-5. EPA/240/R-02/009. December.

Woodward-Clyde,1995. On-Site Corrective Measures Study Report, Former Ciba-Geigy Facility. Cranston, Rhode Island.

Table A-1. Analyte Lists and Reporting Limits for Soil and Groundwater

Parameter	Project Action Limit[1]		Laboratory Reporting Limit[2]	
	Ground-water (ug/L)	Soil (mg/Kg)	Groundwater (ug/L)	Soil (mg/Kg)
VOCs				
				Lo□ Level[3m]
1□1□1-Trichloroethane	□A	□.□E□02	1	0.00□
1□1□2□2-Tetrachloroethane	□A	1.3E-00	0.□	0.00□
1□1□1□2-Tetrachloroethane	□A	2.2E□00	0.0□	0.00□
1□1□2-Trichloroethane	□A	3.□E□00	1	0.00□
1□1-Dichloroethane	□A	3.3E□00	1	0.00□
1□1-Dichloroethene	□A	9.2E□02	1	0.00□
1□2-Dibromo-3-chloropropane	□A	□.0E-01	□	0.00□
1□2-Dibromoethane	□A	1.0E-02	1	0.00□
1□2-Dichlorobenzene	9.4E+01	NA	0.020	0.005
1□2-Dichloroethane	□A	9.0E-01	1	0.00□
1□2-Dichloropropane	□A	1.9E-00	1	0.00□
2-Butanone	□A	1.0E□0□	10	0.0□
2-Chlorotoluene	1.5E+03	NA	0.020	NA
□-Methyl-2-pentanone	□A	1.2E□03	2□	0.0□
Acetone	□A	□.□E□03	2□	0.0□
Benzene	□A	2.□E□00	1	0.00□
Bromodichloromethane	□A	1.0E□01	0.□	0.00□
Bromoform	□A	□.1E□01	1	0.00□
Bromomethane	□A	□.0E-01	2	0.010
Carbon tetrachloride	□A	1.□E□00	1	0.00□
Chlorobenzene	1.7E+03	210 or 100	0.020	0.005
Chloroform	□A	1.2E□00	1	0.00□
cis-1□2-Dichloroethene	□A	□.3E□02	1	0.00□
Ethylbenzene	□A	□.1E□01	1	0.00□
Isopropylbenzene	□A	2.□E□01	1	0.00□
Methylene chloride	□A	□.□E□01	2	0.02□
Methyl-tert-butyl ether	□A	3.9E□02	1	0.00□
o-Xylene	7.8E+01	1.1E+02	0.060	0.005
p/m-Xylene	7.8E+01	1.1E+02	0.060	0.005
Styrene	□A	1.3E□01	1	0.00□
Tetrachloroethene	□A	1.2E□01	1	0.00□
Toluene	1.7E+03	190 or 54	0.020	0.005
trans-1□2-Dichloroethene	□A	1.1E□03	1	0.00□

Parameter	Project Action Limit[1]		Laboratory Reporting Limit[2]	
	Ground-water (ug/L)	Soil (mg/Kg)	Groundwater (ug/L)	Soil (mg/Kg)
Trichloroethene	□A	1.3E□01	1	0.00□
Vinyl chloride	□A	2.0E-02	1	0.01
SVOCs				
2-Chlorophenol	□A	3.9E□01	□A	0.333
1□2-Dichlorobenzene (o-DCB)	□A	□.1E□02	□A	0.□□0
1□3-Dichlorobenzene (m-DCB)	□A	□.3E□02	□A	0.□□0
1□□-Dichlorobenzene (p-DCB)	□A	2.□E□01	□A	0.□□0
2□□-Dichlorophenol	□A	1.□E□01	□A	0.333
2□□-Dimethylphenol	□A	1.2E□02	□A	0.333
2□□-Dinitrophenol	□A	1.2E□01	□A	1.□□
Pentachlorophenol	□A	□.3E□00	□A	1.□□
Phenol	□A	1.□E□03	□A	0.333
2□□□□-Trichlorophenol	□A	□.1E□02	□A	0.333
2□□□□-Trichlorophenol	□A	□.□E□01	□A	0.333
Acenaphthene	□A	□.3E□01	□A	0.333/0.01□0□
Acenaphthylene	□A	2.3E□01	□A	0.333/0.01□0□
Anthracene	□A	3.□E□01	□A	0.333/0.01□0□
1□1-Biphenyl	□A	□.1E□00	□A	0.333
Benzo(a)anthracene	□A	9.0E-01	□A	0.333/0.01□0□
Benzo(a)pyrene	□A	□.0E-01	□A	0.1□□/0.01□0□
Benzo(b)fluoranthene	□A	9.0E-01	□A	0.333/0.01□0□
Benzo(g□h□i)perylene	□A	□.0E-01	□A	0.333/0.01□0□
Benzo(□)fluoranthene	□A	9.0E-01	□A	0.333/0.01□0□
□-Chloroaniline	□A	3.1E□02	□A	0.□□□
Chrysene	□A	□.0E-01	□A	0.1□□/0.01□0□
bis(2-Chloroethyl)ether	□A	□.0E-01	□A	0.333
2□2□Oxybis(1-chloropropane)	□A	9.1E□0.0	□A	0.333
2□□-Dinitrotoluene	□A	9.0E-01	□A	0.333
3□3□Dichlorobenzidine	□A	1.□E□00	□A	0.□□□
Dibenzo(a□h)anthracene	□A	0.□E-01	□A	0.1□□/0.01□0□
Diethyl phthalate	□A	3.□E□02	□A	0.333
Dimethyl phthalate	□A	1.9E□03	□A	0.333
bis(2-Ethylhexyl)phthalate	□A	□.□E□01	□A	0.333
Fluoranthene	□A	2.0E□01	□A	0.333/0.01□0□
Fluorene	□A	2.□E□01	□A	0.333/0.01□0□
□exachlorobenzene	□A	□.0E-01	□A	0.333
□exachlorobutadiene	□A	□.2E□00	□A	0.333
□exachloroethane	□A	□.□E□01	□A	0.333

Parameter	Project Action Limit[1]		Laboratory Reporting Limit[2]	
	Ground-water (ug/L)	Soil (mg/Kg)	Groundwater (ug/L)	Soil (mg/Kg)
Indeno(1□2□3-cd)pyrene	□A	9.0E-01	□A	0.333/0.01□0□
2-Methylnaphthalene	□A	1.23E□02	□A	0.333/0.01□0□
□aphthalene	□A	□.□E□01	□A	0.333/0.01□0□
Phenanthrene	□A	□0E□01	□A	0.333/0.01□0□
Pyrene	□A	1.3E□01	□A	0.333/0.01□0□
1□2□□-Tirchlorobenzene	□A	9.□E□01	□A	0.333
Pesticides				
alpha-Chlordane	□A	1.□E□00	□A	0.002□
gamma-Chlordane	□A	1.□E□00	□A	0.002□
Dieldrin	□A	3.0E-02	□A	0.002□
PCB – Aroclors				
Aroclor -101□	□A	□A	□A	0.0□
Aroclor -1221	□A	□A	□A	0.0□
Aroclor -1232	□A	□A	□A	0.0□
Aroclor -12□2	□A	□A	□A	0.0□
Aroclor -12□□	□A	□A	□A	0.0□
Aroclor -12□□	□A	□A	□A	0.0□
Aroclor -12□0	□A	□A	□A	0.0□
Aroclor -12□2	□A	□A	□A	0.0□
Aroclor -12□□	□A	□A	□A	0.0□
Total PCBs – Aroclor	0.0□	2□ or 1	□A	0.0□
Cyanide	□A	2.0E□02	□A	1
Metals				
Antimony	□A	1.0E□01	□A	□E
Arsenic	□A	□.0E□00	□A	3.33
Barium	□A	□.□E□03	□A	□E
Beryllium	□A	1.□E□00	□A	□E
Cadmium	□A	3.9E□01	□A	0.□□
Chromium (III)	□A	1.□E□03	□A	□E
Chromium (VI)	□A	3.9E□02	□A	□E
Copper	□A	3.1E□03	□A	3.33
Lead	□A	1.□E□02	□A	□E
Manganese	□A	3.9E□02	□A	1.33
Mercury	□A	2.3E□00	□A	0.033
□ic□el	□A	1.0E□03	□A	3.33
Selenium	□A	3.9E□02	□A	□E
Silver	□A	2.0E□02	□A	□E

Parameter	Project Action Limit[1]		Laboratory Reporting Limit[2]	
	Ground-water (ug/L)	Soil (mg/Kg)	Groundwater (ug/L)	Soil (mg/Kg)
Thallium	□A	□.□E□00	□A	□E
Vanadium	□A	□.□E□02	□A	1.33
□inc	□A	□.0E□03	□A	3.33

1. Project Action Limits for toluene, 2-chlorotoluene, 1,2-dichlorobenzene, chlorobenzene and xylenes in groundwater from Sediment RCRA Facility Investigation Report (1995). Values based upon ecological risk effects to river from Site soil contamination. PCB groundwater Project Action Limits from USEPA Maximum Contaminant Level (MCL) for drinking water. PCBs in soil Project Action Limit based upon risk evaluation presented in July 13, 2017 memorandum. Cranston RCRA Closure Project: Former Production Area Remediation. Project Action Limits for VOCs (except those listed prior) in soil based on Rhode Island Method 1 R-DEC, Rules and Regulations for the Investigation and Remediation of Hazardous Material Releases, RIDEM, February 2004. DEM-DSR-01-93. Project Action Limits for soil parameters other than PCBs from USEPA Regional Screening Levels (RSLs). November 2011 [http://www.epa.gov/reg3hwmd/risk/human/rb-concentration_table/Generic_Tables/index.htm].
   Project Action Limits for groundwater, except select VOCs and PCBs, based on Rhode Island GB Groundwater Objective. Rules and Regulations for the Investigation and Remediation of Hazardous Material Releases, RIDEM, February 2004. DEM-DSR-01-93.
2. Adjusted for sample moisture and/or dilutions, where needed.
3. Water preserved sample.
4. Laboratory Reporting Limits are 40x higher for methanol preserved sample.

* Selected Ion Monitoring

NA Not Available
NE Not Established

B.0 Measurement/Data Acquisition

B.1 Sampling Process Design

The soil sampling design and rationale, including each sample location/ID number, depth, analysis(es) to be performed and rationale for sample collection is identified in **Table 4-1 of the SAP**. The groundwater sampling design and rationale, presenting similar information, is presented in **Table 4-2 of the SAP**.

B.2 Sampling Methods

The CMI Work Plan describes the field activities that will provide additional data to meet the stated objectives. The activities described in the CMI Work Plan include:

- Soil sampling and analysis following IRM excavation to verify compliance with the risk-based cleanup goals (i.e., PCBs less than 25 mg/kg and less than 1 mg/kg in the FEMA Floodway, and VOC toluene less than 54 mg/kg in SWMU-11 excavation). Areas where post-excavation soil sampling, in addition to existing soil sample locations not to be excavated, result in PCB concentrations greater than 10 mg/kg, but less than 25 mg/kg will be capped with a geotextile and 2-foot soil cover, while soils less than 10 mg/kg will be covered by a 2-foot soil cover. Further details of the capping plan are provided in the CMI Work Plan, Section 3.2.2.
- Groundwater sampling and analysis of existing and new Site wells using low-flow sampling methods to evaluate ISCO progress and VOC contaminant concentrations in shallow and deep groundwater, and also to monitor if breakthrough of contamination is migrating into the adjacent Pawtuxet River.

The sampling and measurement methods associated with this field work are discussed in each of the subsections below.

B.2.1 Field Measurements

Relevant SOPs for collection of field measurements are provided in **Appendix A** of this QAPP. The following SOPs are associated with the collection of field measurements:

- SOP#2114 – Photo-ionization Detector (HNU) for collection of headspace total VOC measurements for soil,
- SOP#2043 – Manual Water Level Measurements, and
- EQASOP-GW 001 – Region 1 Low Stress (Low-Flow) Purging and Sampling Procedure for the Collection of Groundwater Samples from Monitoring Wells, which provides procedures for the collection of water quality parameters (pH, specific conductivity, temperature, turbidity, dissolved oxygen [DO], and oxidation-reduction potential [ORP]), taken in conjunction with the groundwater sampling.

Calibration procedures for the field instruments used are described in Section B.7 of this QAPP.

B.2.2 Soil Sampling Procedures

Figures 1 and 2 of the SAP show the proposed soil sample locations, analyses to be performed, and sampling and analysis rationale. For areas where VOC samples will be collected, at each individual sample location, the VOA vials for VOC analysis will be collected before the container(s) for other analyses. Proposed PCB soil samples were placed in accordance with 40 CFR 761 Subpart O. PCB grab samples will be collected from the cleanup area excavation sidewalls and bottom to verify acceptable extent of excavation. Samples will be analyzed for PCBs using laboratory analytical methods (SW-846 8082/3540C) and/or the approved field screening via Dexsil L2000DX PCB/Chloride Analyzer System. Prior to the use of the Dexsil screening tool, an evaluation (using Site samples) correlating the Dexsil data to laboratory analytical data will be completed to verify that they are comparable to laboratory results and that there are no significant matrix interferences which would preclude the use of field screening results. This procedure is presented in Section 6.2 of the SAP.

Soil samples for VOC analyses will be collected as independent, discrete grab samples. Samples will be collected using laboratory provided plastic syringes and will be placed in laboratory preserved sample vials immediately after extraction from the ground. VOC sample locations will be spaced to accommodate at least 1 sample for every 25 linear feet of sidewall and at least 1 sample for every 625 square feet of excavation bottom. VOC samples are anticipated for collection only in the area of SWMU-11 and SWMU-8. For VOCs, sample depths will be either the location on the sidewall where PID readings are the highest or if no detectable PID readings, the mid-point of the excavation sidewall, and the bottom of the final excavation. PCB soil samples will be collected in accordance with TSCA Subpart O, and include at least one sample per sidewall (four sidewalls typically anticipated).

Soil samples may be required for disposal purposes. The parameters and limits associated with the disposal facility shall be followed. In general, soil stockpiles will be equally split, and samples, except for VOCs (if needed) will be composited from at least six areas within the stockpile section. Depths of samples shall be a minimum of 1 foot into the stockpile, or deeper, if possible. This is to ensure that the sample will be representative of the stockpiled material.

Soil sample locations will be recorded in the field logbook as sampling is completed. A sketch of the sample location will be entered into the logbook and any physical reference points will be labeled. If possible, distances to the reference points will be given.

All soil samples will be collected according to SOP#2012 – Soil Sampling. Decontamination of field equipment will follow SOP#2006 – Sampling Equipment Decontamination. Total VOC headspace screening will be performed to refine the selection of soil sampling locations for VOCs at SWMU-11 and SWMU-8. Total VOC headspace screening will be performed according to SOP#2114 – Photo-ionization Detector (HNU).

Project action limits and laboratory RLs for soil samples are presented in **Table A-1.**

B.2.3 Groundwater Sampling Procedures

All field meters used during groundwater sampling procedures will be calibrated according to manufacturer's guidelines and specifications before and after every day of field use. Field meter probes will be decontaminated before and after use at each well according to SOP#2006 – Sampling Equipment Decontamination.

Water Level Measurements

Water level measurements will follow the SOP#2043 – Manual Water Level Measurement. If well heads are accessible, all wells will be sounded for depth to water from top of casing and total well depth prior to purging. An electronic sounder, accurate to the nearest +/- 0.01 feet, will be used to measure depth to water in each well. When using an electronic sounder, the probe is lowered down the casing to the top of the water column. The graduated markings on the probe wire or tape are used to measure the depth to water from the surveyed point on the rim of the well casing. Typically, the measuring device emits a constant tone when the probe is submerged in standing water and most electronic water level sounders have a visual indicator consisting of a small light bulb or diode that turns on when the probe encounters water. Total well depth will be sounded from the surveyed top of casing by lowering the weighted probe to the bottom of the well. The weighted probe will sink into silt, if present, at the bottom of the well screen. Total well depths will be measured by lowering the weighted probe to the bottom of the well and recording the depth to the nearest 0.1 feet.

Water-level sounding equipment will be decontaminated before and after use in each well. Water levels will be measured in wells which have the least amount of known contamination first. Wells with known or suspected contamination will be measured last.

Monitoring Well Sampling

Groundwater samples will be collected from existing monitoring wells with portable bladder pumps using disposable bladders using low-flow sampling techniques. **Figure 3 of the SAP** indicates the 6 monitoring wells to be sampled wells MW-302I, MW-302S, MW34S, MW-34D, MW102D, and MW-102S). Analyses to be performed and sampling and analysis rationale are provided in earlier sections.

SOPs for sampling techniques and equipment calibration and operation are provided in **Attachment 1** of this QAPP. The following SOPs are associated with groundwater sampling:

- SOP#2114 – Photo-ionization Detector HNU,
- SOP#2043 – Manual Water Level Measurement,
- EQASOP – Calibration of Field Instruments,
- EQASOP-GW 001 – Region 1 Low Stress (Low-Flow) Purging and Sampling Procedure for the Collection of Groundwater Samples from Monitoring Wells, and
- SOP#2005 – Sampling Equipment Decontamination.

All wells will be purged prior to sampling. A minimum of three casing volumes of water will be purged using the portable bladder pump. Water will be collected into a measured bucket to record the purge volume. Casing volumes will be calculated based on total well depth, standing water level, and casing diameter. One casing volume will be calculated as:

$$\mathbf{V = nd^2 h / 77.01}$$

where: **V** is the volume of one well casing of water ($1ft^3$ = 7.48 gallons);
d is the inner diameter of the well casing (in inches);
h is the total depth of water in the well (in feet).

It is important to obtain a representative sample from the wells. Stable water quality parameter measurements, as defined in EQASOP-GW 001, are an indication that a representative sample has been

obtained. If turbidity below 25 Nephelometric Turbidity Units (NTU) cannot be achieved during sampling, the turbidity will be considered part of the total contaminant mobile load and an unfiltered sample will be collected. If metals analysis is required at that location, a filtered and unfiltered sample will be collected for analysis. The USEPA Project Manager will be consulted in such instances to ensure agreement of this or alternate sampling approaches to meet project objectives.

At each sampling location, all bottles designated for a particular analysis (e.g., VOCs) will be filled sequentially before bottles designated for the next analysis are filled (e.g., semi volatile organic compounds [SVOCs]). If a duplicate sample is to be collected at this location, all bottles designated for a particular analysis for both sample designations will be filled sequentially before bottles for another analysis are filled. In the filling sequence for duplicate samples, bottles with the two different sample designations will alternate (e.g., VOCs designation GW-2, VOCs designation GW-4 [duplicate of GW-2]), metals designation GW-2, and metals designation GW-4 [duplicate of GW-2]). Groundwater samples will be transferred directly into the appropriate sample containers with preservative, if required, chilled if appropriate, and processed for shipment to the laboratory.

If a well dewaters during purging and three casing volumes are not purged, that well will be allowed to recharge up to 80% of the static water column and dewatered once more. After water levels have recharged to 80% of the static water column a second time, groundwater samples will be collected.

Project action limits and laboratory RLs for groundwater samples are presented in **Table A-1**.

B.2.4 Concrete Sample Procedures

Concrete sampling will be conducted for on-Site reuse purposes. Unless required to be demolished and removed to access contaminated soils below, concrete is to remain in place. If BASF decides to reuse concrete on-site, concrete sampling will follow the methods discussed in EPA's SOP for Sampling Porous Materials. Sample locations and frequency will meet TSCA requirements in 40 CFR 761.265. The concrete samples will be analyzed for PCBs using USEPA SW-846 8082A/3540C Soxhlet Extraction Method.

B.2.5 Quality Control Sample Collection

QC samples for laboratory analyses will include field duplicates, MS/MSDs, equipment blanks, trip blanks, and temperature blanks. These samples will be collected as described below:

Field duplicates

Field duplicates will be collected at a frequency of one (1) field duplicate per 20 field samples, per matrix, per sampling technique. Field duplicates for solid samples will be collected by alternately filling two sets of identical sample containers from the interim container used to homogenize the sample. The soil will be homogenized in a sample-dedicated container (at least one-gallon). Homogenized material from the bucket will then be transferred to the appropriate wide-mouth glass jars for both the regular and duplicate samples. All jars designated for a particular analysis (e.g., SVOCs) will be filled sequentially before jars designated for another analysis are filled (e.g., metals).

For soil VOC samples, the field duplicate will be collected using the collection device (e.g., sample coring device) from the same areas as the parent sample (i.e., soil VOC samples are not homogenized). For aqueous samples, the parent sample and field duplicate sample containers will be filled in an alternating fashion (i.e., one parent sample container filled, one field duplicate container filled). All field duplicates will be analyzed for the same parameters as their associated samples.

Duplicate samples will be preserved, packaged, and sealed in the same manner as other samples of the same matrix. A separate sample number and station number will be assigned to each duplicate, and it will be submitted blind to the laboratory.

Matrix Spike/Matrix Spike Duplicates

MS/MSD samples will be collected at a frequency of one (1) for every 20 field samples, per matrix for all parameters. For those samples designated as MS/MSDs, sufficient additional volume or mass (based on the laboratory's requirements) will be collected.

Equipment blanks

Equipment blanks will be collected at a rate of one for every 20 field samples, per matrix, per sampling technique. Equipment blanks will be collected by pouring laboratory supplied VOA-free water over the decontaminated sampling equipment, and collecting the rinsate into the appropriate sample containers. Equipment blanks will not be collected when dedicated sampling equipment is used (e.g., peristaltic pump with dedicated tubing).

Trip blanks

Trip blanks will be included with each shipment of groundwater and soil samples collected for VOC analyses. Trip blanks associated with groundwater samples will originate in the laboratory and will be prepared by filling two 40-mL VOA vials with laboratory supplied VOA-free water and chemical preservative, and sealing the vials with septum-lined caps (allowing no headspace). Trip blanks associated with soil VOC samples will consist of one set of the soil VOA vials (i.e., two low level VOA vials and one high level VOA vial). Trip blanks will accompany the sample bottles to the Site and will remain (unopened) in the shipping container until the sample bottles are received back at the laboratory.

Temperature Blanks

Temperature blanks will be included in each cooler, allowing the laboratory to determine the temperature of the shipment without disturbing the field samples. Temperature blanks will be prepared by filling a plastic or glass vial with water.

B.2.6 Equipment Decontamination

Equipment will be decontaminated in designated areas on-Site in accordance with the procedures outlined in SOP#2006 – Sampling Equipment Decontamination. The decontamination procedures in SOP#2006 will be modified as follows:

- If field equipment comes into contact with PCB soils, the decontamination procedure will consist of a tap water and detergent initial cleaning, then each piece of equipment will be rinsed with tap water and hexane. The hexane rinse will include the use of pads or rags to wipe the equipment. The tap water and hexane rinse will be conducted twice. Equipment will be allowed to dry completely prior to reuse.
- Decontamination of the drilling equipment, for installation of new monitoring wells, will be performed by the drilling subcontractors. AEI will provide the drilling subcontractors with a copy of SOP#2006 – Sampling Equipment Decontamination (Attachment 1 of the QAPP) and will oversee that the decontamination is performed in accordance with the SOP and the above requirements for PCB decontamination.

Decontamination fluids and other decontamination materials (i.e., Personal Protective Equipment, rags, other consumables) will be collected in 55-gallon drums and managed in accordance with 40 CFR 761.61(b)(1).

B.3 Sample Handling and Custody

B.3.1 Sample Containers, Preservation, and Holding Times

Sample bottles and chemical preservatives will be provided by the laboratories. The containers will be cleaned by the manufacturer to meet or exceed all analyte specifications established in the latest U.S. EPA's Specifications and Guidance for Contaminant-Free Sample Containers. A Certificate of Analysis will be provided with each lot of containers and maintained on file to document conformance to EPA specifications.

A summary of sample container, preservation, and holding time requirements is presented in Table B-1.

B.3.2 Sample Labeling

All samples collected will be labeled in a clear and precise way for proper identification in the field and for tracking in the laboratory. The samples will have pre-assigned, identifiable, and unique numbers. Immediately upon collection, each sample will be labeled with an adhesive label. Each sample label will include the sample number, location, date/time of collection, and analysis. Samples will be assigned unique sample identifications as described below:

- Groundwater – Well ID or groundwater grab ID (e.g., MW-7).
- Soil – Grab ID followed by the depth (e.g., PX-07(4-6)).
- Equipment blank – "EB" followed by date (e.g., EB-060112). If multiple EBs are collected on the same day for differing types of sampling equipment, numerical designations will be used to differentiate the type of equipment blank (e.g., EB01-060112, EB02-060112), with the type of

sampling equipment associated with each type of equipment blank documented in the field log book (e.g., EB01-060112 collected from split spoon sampler, EB02-060112 collected from Geoprobe® cutting shoe)

- Trip blank – "TB" followed by date (e.g., TB-060112). If multiple TBs are collected on the same day for multiple coolers of VOC samples, numerical designations will be used to differentiate the different trip blanks (e.g., TB01-060112, TB02-060112). The cooler specific chain-of-custody forms will document which VOC samples are associated with the trip blanks.
- The last character of the sample ID will designate a duplicate (e.g, MW-10S-2 for a duplicate groundwater sample collected at monitoring well MW-10S):

  2 = Field duplicate

Samples being designated for MS/MSD analysis will not include an identifier as part of the sample code, but will be identified as such on the chain-of-custody.

B.3.3 Custody Procedures

Custody is one of several factors that are necessary for the admissibility of environmental data as evidence in a court of law. Custody procedures help to satisfy the two major requirements for admissibility: relevance and authenticity. Sample custody is addressed in two parts: field sample collection and laboratory analysis.

A sample is considered to be under a person's custody if:

- The item is in the actual possession of a person,
- The item is in the view of the person after being in actual possession of the person,
- The item was in the actual physical possession of the person but is locked up to prevent tampering, and/or
- The item is in a designated and identified secure area.

Field Custody Procedures

The field sampler is personally responsible for the care and custody of the samples until they are transferred or dispatched properly. Field procedures have been designed such that as few people as possible will handle the samples.

All sample containers will be identified by the use of sample labels with sample numbers, sampling locations, date/time of collection, and type of analysis. Sample labels will be completed for each sample using waterproof ink unless prohibited by weather conditions. For example, a logbook notation would explain that a pencil was used to fill out the sample tag because the pen would not function in freezing weather.

Samples will be accompanied by a properly completed chain-of-custody form. The sample numbers and locations will be listed on the chain-of-custody form. When transferring the possession of samples, the individuals relinquishing and receiving will sign, date, and note the time on the record. This record documents the transfer of custody of samples from the sampler to another person, to the permanent laboratory, or to/from a secure storage location. An example chain-of-custody form (blank) is presented as **Figure B-1**.

All sample shipments will be accompanied by the chain-of-custody record identifying the contents. The original record will accompany the shipment, and the back copy will be retained by the sampler and placed in the project files.

Field samples will be packed and shipped to the laboratory according to the following method. Samples will be properly packaged on ice for shipment and dispatched to the laboratory for analysis, with a separate signed custody record enclosed in and secured to the inside top of each sample box or cooler. (Samples should be placed on ice immediately after collection in order to cool them to the required preservation temperature, which is 2 to 6 °C for all soil and groundwater samples, then shipped on ice to keep at the required preservation temperature.) Shipping containers will be sealed and secured with strapping tape and custody seals for shipment to the laboratory. The custody seals will be attached to the front right and back left of the cooler and covered with clear plastic tape after being signed by field personnel. The cooler will be strapped shut with strapping tape in at least two locations.

If the samples are sent by common carrier, the waybill will be used. Waybills will be retained as part of the permanent documentation. Commercial carriers are not required to sign off on the custody forms since the custody forms will be sealed inside the sample cooler and the custody seals will remain intact.

Laboratory Custody Procedures

Samples will be received and logged in at the laboratory by a designated sample custodian or his/her designee. Upon sample receipt, the sample custodian will:

- Examine the shipping containers to verify that the custody tape is intact,
- Examine all sample containers for damage,
- Determine if the temperature required for the requested testing program has been maintained during shipment and document the temperature on the chain-of-custody form or in sample log-in records,
- Compare samples received against those listed on the chain-of-custody,
- Verify that sample holding times have not been exceeded,
- Examine all shipping records for accuracy and completeness,
- Determine if sample pH is adequate and whether any adjustments were required (if applicable) and record sample receipt form,
- Sign and date the chain-of-custody immediately (if shipment is accepted) and attach the waybill,
- Note any problems associated with the coolers and/or samples on the cooler receipt form and notify the Laboratory Project Manager, who will be responsible for contacting the client,
- Attach laboratory sample container labels with unique laboratory identification and analyses required, and
- Place the samples in the proper laboratory storage.

Following receipt, samples will be logged in according to the following procedure:

- The samples will be entered into the laboratory information management system (LIMS). At a minimum, the following information will be entered: project name or identification, unique sample identification numbers (both client and internal laboratory), type of sample, required analyses, and date and time of laboratory receipt of samples.

- The appropriate laboratory personnel will be notified of sample arrival.
- The completed chain-of-custody, waybills, and any additional documentation will be placed in the project file.
- Specific details of laboratory custody procedures for sample receiving, sample identification, sample control, and record retention are described in the Laboratory QA Manual (**Attachment 3** of this QAPP) and laboratory SOPs (**Attachment 2** of this QAPP).

B.3.4 Packaging and Shipping

All samples that need to be shipped by common carrier to the laboratory will be placed in a strong-outside shipping container (a steel-belted cooler). The following outlines the packaging procedures that will be followed for low concentration samples.

1. Seal the drain plug of the cooler with fiberglass tape to prevent melting ice from leaking out of the cooler.
2. The bottom of the cooler should be lined with bubble wrap to prevent breakage during shipment.
3. Check screw caps for tightness and, if not full, mark the sample volume level of liquid samples on the outside of the sample bottles with indelible ink.
4. Secure bottle/container tops with clear tape and custody seal all container tops.
5. Affix sample labels onto the containers with clear tape.
6. Wrap all glass sample containers in bubble wrap to prevent breakage.
7. Seal all sample containers in heavy duty plastic zip-lock bags. Write the sample numbers on the outside of the plastic bags with indelible ink.
8. Place samples in a sturdy cooler(s) lined with a large plastic trash bag. Enclose the appropriate chain of custody(ies) in a zip-lock plastic bag affixed to the underside of the cooler id.
9. Fill empty space in the cooler with bubble wrap or Styrofoam peanuts to prevent movement and breakage during shipment. Vermiculite should also be placed in the cooler to absorb spills if they occur.
10. Ice used to cool samples will be double sealed in two zip lock plastic bags and placed on top and around the samples to chill them to the correct temperature.
11. Each cooler will be securely taped shut with fiberglass strapping tape, and custody seals will be affixed to the front, right and back of each cooler.

B.4 Analytical Methods

For those soils being sent to an off-site laboratory, soil and groundwater samples will be analyzed by

ESS Laboratory
185 Frances Avenue
Cranston, RI 02910
(401) 461-7181

A summary of the sample locations, types of samples collected, and analyses to be performed is presented in this QAPP.

Samples will be analyzed for the analytes listed in **Table A**-1. The laboratory analytical methods to be used are summarized in **Table B-2**. Laboratory SOPs that will be utilized for the analyses are listed in **Table B-3** and are included in **Attachment 2**.

Depending upon project schedule and cost considerations□field-screening data may be used to establish the presence or absence of PCB concentrations in soil using an EPA-approved field extraction and analysis technology (EPA Method 90□□) □hich uses the Dexsil L2000DX PCB/Chloride Analyzer System. The technical approach for employing the Dexsil analytical methodology is discussed in the SAP, Section 6.2. The details for this method are presented in **Attachment 4**.

B.5 Quality Control

B.5.1 Field

Field QC samples will be collected to assess the accuracy and precision of the data. These samples will include field duplicates, equipment blanks, and trip blanks. The collection of QC samples is described in Section B.2.5.

B.5.2 Laboratory

The analytical laboratory has a QC program in place to ensure the reliability and validity of the analysis performed at the laboratory. All analytical procedures are documented in writing as SOPs and each SOP includes the minimum requirements for the procedure. The internal QC checks differ slightly for each individual procedure and are outlined in the SOPs included in **Attachment 1**. In general, they include:

- Blanks (method, reagent/preparation, instrument),
- MS/MSDs,
- Surrogate spikes (organic analyses),
- Laboratory duplicates,
- LCS,
- Internal standard area counts (gas chromatography/mass spectrometry [GC/MS] analyses),
- Endrin/DDT breakdown check standard results (pesticide and PCB – Aroclors),
- Calibration check compounds,
- Interference checks (Inductively Coupled Plasma [ICP] analysis),
- Serial dilutions (ICP analysis),
- Individual canister cleaning certification, and
- Control limits for precision and accuracy, which will be the laboratory limits current at the time of analyses.

A routinely collected soil sample (a full 8-ounce sample jar or two 120-milliliter sample vials) contains sufficient volume for both routine sample analysis and additional laboratory QC analyses. Therefore, a separate soil sample for laboratory QC purposes will not be collected.

For water samples, double volumes of samples are supplied to the laboratory for its use for QC purposes. Three sets of water sample containers are filled and all containers are labeled with a single sample number.

B.6 Instrument/Equipment Testing, Inspection, and Maintenance

The field instrumentation which may or will be used for collection of data for this project include a PID, a Dexsil L2000DX PCB Analyzer System, an electronic water level indicator, and water quality

instrumentation with flow through cell. AEI field personnel will be responsible for ensuring that the instruments are properly functioning. At a minimum, this will entail checking the instrument prior to shipment to the field and performing daily operational checks and calibration as described in Section B.7. Routine maintenance and trouble-shooting procedures will be performed as described in the manufacturer's instructions. Spare parts will be readily available on Site or from the vendor.

Routine testing and preventive maintenance is performed by the laboratory as part of their QA program. Details on the type of checks, frequencies, and corrective actions are included in the Laboratory QA Manual (**Attachment 3 of this QAPP**).

B.7 Instrument/Equipment Calibration and Frequency

The field instrumentation requiring field calibration will include a PID, YSI water quality meter, and LaMotte turbidity meter. Calibration will be performed daily or anytime that the operator suspects that the instrument is not reading accurately according to the manufacturer's specifications.

All calibrations and calibration checks will be documented in the field records. Calibration records will include the date/time of calibration/calibration check, name of the person performing the calibration, reference standard used, and the results of the calibration or check.

Calibration procedures for laboratory instruments will consist of initial calibrations, initial calibration verifications, and continuing calibration verification. The SOP for each analysis performed in the laboratory describes the calibration procedures, their frequency, acceptance criteria, and the conditions that will require recalibration.

The laboratory maintains documentation for each instrument, which includes the following information: instrument identification, serial number, date of calibration, analyst, calibration solutions, and the samples associated with these calibrations.

B.8 Inspection/Acceptance of Supplies and Consumables

For this project, critical supplies for field activities will be tracked through AEI's system in the following manner.

Critical Supplies and Consumables	**Inspection Requirements and Acceptance Criteria**	**Responsible Individual**
Sample bottles	Visually inspected upon receipt for cracks, breakage, and cleanliness. Must be accompanied by Certificate of Analysis.	Field Team
Chemicals and reagents	Visually inspected for proper labeling, expiration dates, appropriate grade	Field Team
Field measurement equipment	Functional checks to ensure proper calibration and operating capacity	Field Team
Sampling equipment	Visually inspected for obvious defects, damage, and contamination	Field Team

Supplies and consumables not meeting acceptance criteria will initiate the appropriate corrective action. Corrective measures may include repair or replacement of measurement equipment, and/or notification of vendor and subsequent replacement of defective or inappropriate materials. All actions will be documented in the project files.

The laboratory system of inspection and acceptance of supplies and consumable is documented in the Laboratory QA Manual (**Attachment 3**).

B.9 Non-direct Measurements

The majority of the existing non-direct data (i.e., historical reports, maps, literature searches) was limited to the design of the remediation program. Certain data identified as being usable for decision making purposes in the CMI Work Plan may be used to supplement the data obtained from this investigation.

The data for this investigation which is necessary to meet the objectives specified in Section A.7 of this QAPP will come from the following sources:

- Field records,
- Field measurements, and
- Analytical results.

The data collected under this QAPP has been designed to be of sufficient quality to meet the program objectives.

B.10 Data Management

Data management operations include data recording, validation, transformation, transmittal, reduction, analysis, tracking, storage and retrieval.

Upon receipt from the laboratory, hard copy data and EDDs will be checked for completeness. During the data analysis process, a variety of quality checks are performed to ensure data integrity. These checks include:

- Audits to ensure that laboratories reported all requested analyses,
- Checks that all analytes are consistently and correctly identified,
- Reviews to ensure that units of measurement are provided and are consistent,
- Reports to review sample definitions (depths, dates, locations), and
- Proofing manually entered data against the hard-copy original.

Records of the checks will be maintained on file.

Once all data quality checks are performed, the data will be exported to a variety of formats to meet project needs. Cross-tab tables showing concentrations by sample location will be prepared.

The project data will be maintained on a secure network drive, which is backed up regularly. Access to the data will be limited to authorized users and will be controlled by password access. Data will be retained in accordance with the requirements stated in Section A.9.1 of this QAPP.

Figure B-1. Example of Chain of Custody Form

ENVIRONMENTAL PROTECTION AGENCY
Office of Enforcement

CHAIN OF CUSTODY RECORD

REGION 9
75 Hawthorne Street
San Francisco, California 94105

PROJ. NO.	PROJECT NAME					NO. OF CON-TAINERS							REMARKS
SAMPLERS: *(Signature)*													
DATE	TIME	MATRIX	COMP.	GRAB	SAMPLE IDENTIFICATION								

Relinquished by: *(Signature)*	Date / Time	Received by: *(Signature)*		Relinquished by: *(Signature)*	Date / Time	Received by: *(Signature)*		
Relinquished by: *(Signature)*	Date / Time	Received by: *(Signature)*		Relinquished by: *(Signature)*	Date / Time	Received by: *(Signature)*		
Received for Laboratory by: *(Signature)*	Date / Time	Temp.	Seals Intact (Y/N)	Condition / Remarks				

Distribution: Original Accompanies Shipment; Copy to Coordinator Field Files

Table B-1. Sample Container, Preservation, and Holding Time Requirement

Parameter	Container [1]	Preservation	Holding Time [2]
Solid Samples			
VOCs	High level analysis: 1- 40 mL vial filled with 5 mL methanol (5 g soil to 5 mL methanol) Low level analysis: 2-40 mL vials with Teflon stir bar and filled with 5 mL deionized water (5 g soil to 5 mL deionized water) % solids: 1 - 60 mL plastic	Ice, 4°C, in field	48 hours to freezing for water preserved samples; 14 days from collection to analysis for methanol and water preserved samples
Metals	1-8 oz amber glass with Teflon-lined cap	Ice, 4°C.	28 days to analysis (mercury); 180 days to analysis (other metals).
Cyanide	1-8 oz amber glass with Teflon-lined cap	Ice, 4°C.	14 days to analysis
Total Petroleum Hydrocarbon (TPH)	1-8 oz amber glass with Teflon-lined cap	Ice, 4°C.	14 days to extraction; 40 days from extraction to analysis
Pesticides	1-8 oz amber glass with Teflon-lined cap	Ice, 4°C.	14 days to extraction; 40 days from extraction to analysis
PCB – Aroclors	1-8 oz amber glass with Teflon-lined cap	Ice, 4°C.	14 days to extraction; 40 days from extraction to analysis
Aqueous Samples			
VOCs	3 x 40 mL vials	HCl to pH <2; Ice, 4°C.	14 days
PCBs – Aroclors	2 x 1 L amber glass with Teflon-lined cap	Ice, 4°C.	7 days

[1] Laboratory may provide alternate containers as long as the containers meet the requirements of the method and allow the collection of sufficient volume to perform the analyses and any reanalyses required by the method.
[2] Holding time begins from date of sample collection.
mL = Milliliter
L = Liter
g = gram
oz = ounce
4°C = degrees Celsius
HCl = Hydrochloric acid

Table B-2. Analytical Methodologies

Parameter	Methodology
TCL VOCs	SW-846 8260B
TCL SVOCs (incl. SIM PAHs)	SW-846 8270C
TAL Metals	SW-846 6010C/7471B
TCL Pesticides	SW-846 8081A
TCL PCBs - Aroclors	SW-846 3540C/8082A
TPH	SW-846 8100 modified
Cyanide	SW-846 9014

TCL=Target Compound List

Table B-3. Laboratory Preparation and Analytical SOPs

Reference Number	Laboratory Performing Analysis	Title	Analytical Parameter
SOP No. 20_5035	ESS	Volatile Compounds by Gas Chromatography/Mass Spectrometry (GC/MS): Capillary Column Technique (SW-846 Method 5035)	VOCs (soil)
SOP No. 20_8260B	ESS	Volatile Compounds by Gas Chromatography/Mass Spectrometry (GC/MS): Capillary Column Technique (EPA Method 624/SW-846 Method 8260B)	VOCs (aqueous)
SOP No. 60_8270	ESS	Semi volatile Organic Compounds Analysis by Gas Chromatography/Mass Spectrometry (EPA Method 625/SW-846 Method 8270 C and D)	SVOCs
SOP No. 30_6010	ESS	Inductively Coupled Plasma-Atomic Emission Spectroscopy (SW 846 Method 6010B,C/EPA Method 200.7/MCP-CAM IIIA)	Metals (excl. mercury)
SOP No. 30_7471	ESS	Mercury Analysis for Soil Samples (SW 846 Methods 7471A and B)	Mercury
SOP No. 40_0009	ESS	Total and Amenable Cyanide by Distillation (EPA Methods 335.4/SM 4500CN-C,E,G,I/SW846 9010B/9014 and 9010/9012/MCP)	Cyanide
SOP No. 60_8081	ESS	Organochlorine Pesticides by Gas Chromatography: Capillary Column Technique (EPA Method 608/SW-846 8081A and B/SM 6630 C)	Pesticides
SOP No. 60_8082	ESS	Organochlorine PCBs as Aroclors by Gas Chromatography: Capillary Column Technique (EPA Method 608/SW-846 Method 8082)	PCBs
SOP No. 60_8100-mod	ESS	Total Petroleum Hydrocarbons(SW846 Method 8100 modified/ Conn ETPH) by GC/FID	TPH

C.0 Assessment/Oversight

C.1 Assessment and Response Actions

C.1.1 Assessments

The types of planned assessments pertinent to this program include technical surveillance audits (TSAs) of field and laboratory activities, data package audits, and data validation audits.

Field Activity Technical Service Audit

If requested by the AEI Project Manager, a TSA of field activities may be conducted by the AEI Project QA Officer or his/her designate. The TSA includes an examination of field sampling records, field measurement results, field instrument operating and calibration records, sample collection, handling, and packaging procedures, QA procedures, chain-of-custody, sample documentation, etc. If significant deficiencies are noted, follow-up audits will be conducted.

During the audit, the auditor will keep detailed notes of audit findings. Preliminary results of the audit will be reviewed with the AEI Field Team Leader while on Site to ensure that deficiencies adversely affecting data quality are immediately identified and corrective measures initiated. Upon completion of the audit, the AEI Project QA Officer will prepare a written audit report, which summarizes the audit findings, identifies deficiencies and recommends corrective actions. This report will be submitted to the AEI Project Manager, who will be responsible for ensuring that corrective measures are implemented and documented (Section C.1.2). The results of the audit process will be included in the QA reports to management, as described in Section C.2.

Laboratory Technical Service Audit

Laboratory TSAs are conducted periodically by BASF or AEI's QA staff as part of their analytical subcontractor monitoring program. The laboratory TSA includes a review of the following areas:

- QA organization and procedures,
- Personnel training and qualifications,
- Sample log-in procedures,
- Sample storage facilities,
- Analyst technique,
- Adherence to laboratory SOPs and project QAPP,
- Compliance with QA/QC objectives,
- Instrument calibration and maintenance,
- Data recording, reduction, review, and reporting, and
- Cleanliness and housekeeping.

Preliminary results of the systems audit will be discussed with the Laboratory Manager, Laboratory Project Manager, and Laboratory QA Coordinator. A written report that summarizes audit findings and recommends corrective actions will be prepared and submitted to the Laboratory Manager for response,

and to the AEI Project Manager. The results of the audit, including resolution of any deficiencies, will be included in the QA reports to management, as described in Section C.2.

C.1.2 Response Actions

Corrective action is the process of identifying, recommending, approving, and implementing measures to counter unacceptable procedures or out-of-limit QC performance that can affect data quality. Corrective action can occur during field activities, laboratory analyses, and data assessment. All corrective action proposed and implemented should be documented in the QA reports to management (Section C.2). Corrective action should only be implemented after approval by the AEI Project Manager, or his designate.

The BASF and USEPA Project Managers will be notified of significant issues that potentially impact the achievement of the project objectives.

Field Corrective Action

Corrective action in the field may be needed when the sample network is changed (i.e., more/less samples, sampling locations other than those specified in the QAPP, etc.), or when sampling procedures and/or field analytical procedures require modification, due to unexpected conditions. The field team may identify the need for corrective action. The AEI Field Team Leader will approve the corrective action and notify the AEI Project Manager. The AEI Project Manager, in consultation with the AEI Project QA Officer, will approve the corrective action. The AEI Field Team Leader will ensure that the corrective action is implemented by the field team.

Corrective action resulting from internal field audits will be implemented immediately if data may be adversely affected due to unapproved or improper use of approved methods. The AEI Project QA Officer will identify deficiencies and recommend corrective action to the AEI Project Manager. Implementation of corrective actions will be performed by the AEI Field Team Leader and field team. Corrective action will be documented in QA reports to the project management team (Section C.2).

Corrective actions will be implemented and documented in the field record book. Documentation will include:

- A description of the circumstances that initiated the corrective action,
- The action taken in response,
- The final resolution, and
- Any necessary approvals.

No staff member will initiate corrective action without prior communication of findings through the proper channels.

Laboratory Corrective Action

Corrective action in the laboratory may occur prior to, during, and after initial analyses. A number of conditions such as broken sample containers, multiple phases, low/high pH readings, and potentially high concentration samples may be identified during sample log-in or analysis. Following consultation with laboratory analysts and supervisory personnel, it may be necessary for the Laboratory QA Coordinator to approve the implementation of a corrective action or actions. If the nonconformance causes project objectives not to be achieved, the AEI Project Manager will be notified.

These corrective actions will be performed prior to release of the data from the laboratory. The corrective action will be documented in both the laboratory's corrective action files, and in the narrative data report sent from the laboratory to the AEI Project Manager. If the corrective action does not rectify the situation, the laboratory will contact the AEI Project Manager, who will determine the action to be taken and inform the appropriate personnel.

Corrective Action during Data Review and Data Assessment

The need for corrective action may be identified during either data review or data assessment. Potential types of corrective action may include resampling by the field team or reinjection/reanalysis of samples by the laboratory. These actions are dependent upon the ability to mobilize the field team and whether the data to be collected is necessary to meet the required QA objectives. If the AEI data reviewer or data assessor identifies a corrective action situation, the AEI Project Manager will be responsible for informing the appropriate personnel.

C.2 Reports to Management

QA reports will be submitted to the AEI Project Manager to ensure that any problems identified during the sampling and analysis programs are investigated and the proper corrective measures taken in response. The QA reports will include (where applicable):

- All results of field and laboratory audits,
- A summary of revisions to the QAPP,
- Results of any performance evaluation (PE) or split samples,
- Problems noted during data validation and assessment, and
- Significant QA/QC problems, recommended corrective actions, and the outcome of corrective actions.

QA reports will be prepared by the AEI Project QA Officer and submitted on an as-needed basis.

D.0 Data Validation/Data Usability

D.1 Data Review, Verification, and Validation

All data generated through field activities, or through the analytical program, will be reduced, verified and/or validated prior to reporting. No data will be disseminated by AEI or its subcontractors until it has been subjected to the procedures summarized below.

D.1.1 Field Data

Field data will be reviewed daily by the AEI Field Team Leader to ensure that the records are complete, accurate, and legible and to verify that the sampling procedures are in accordance with the protocols specified in the SAP and QAPP.

D.1.2 Internal Laboratory Review

Prior to the release of any data from the laboratory, the data will be reviewed and approved by laboratory personnel. The review will consist of a tiered approach that will include reviews by the person performing the work, by a qualified peer, and by supervisory and/or QA personnel.

D.1.3 Validation of Analytical Data

AEI's validation staff will perform a USEPA Region I Tier I Plus validation on the data for all parameters as described in Section D.2.3 of this QAPP. Laboratory data, including sample-related and instrument-related QC results, will be evaluated for associated QC non-conformances that could result in rejection or estimation of sample data due to extreme QC failures. These data include field duplicate samples, equipment, trip or bottle blanks, total solids, organic MS/MSD and Pesticide and Aroclor Sulfur Clean-up.

QC non-conformances will be evaluated using data validation criteria to determine if the associated sample data would be rejected and considered unusable. Associated sample results will be qualified in the project database as rejected (flagged "R") based on those QC non-conformances. Data usable, but reported below the laboratory RLs will be flagged "J".

The Tier I Plus validation will primarily be based on information provided by the laboratory on QC summary forms and in the EDD, and will include no raw data review. At a minimum, the validation will include evaluation of the following data elements for extreme QC failures:

- Holding times and sample preservation,
- Initial and continuing calibrations and analytical sequence,
- Mass spectrometer tuning (GC/MS only),
- Internal standard performance (GC/MS only),
- Laboratory blanks/equipment blanks/trip blanks,
- Surrogate recoveries,
- LCS/LCS duplicate (LCSD) results,

- MS/MSD results,
- Laboratory duplicate results,
- Field duplicate results to evaluate field precision,
- Field blanks (equipment, trip and bottle blanks) to evaluate field contamination,
- Interference check sample results,
- ICP serial dilution results,
- Pesticide and Aroclor Sulfur Removal (pesticide and PCB – Aroclors only),
- % solids, and
- or Sulfur Removal (pesticide and PCB – Aroclors only)
- Percent solids
- Reporting limits and sample results (limited to evaluating dilutions and reanalyses).

D.2 Verification and Validation Methods

D.2.1 Field Data Verification

Field records will be reviewed by the AEI Field Team Leader to ensure that:

- Logbooks and standardized forms have been filled out completely and that the information recorded accurately reflects the activities that were performed.
- Records are legible and in accordance with good recordkeeping practices, i.e., entries are signed and dated, data are not obliterated, changes are initialed, dated, and explained.
- Sample collection, handling, preservation, and storage procedures were conducted in accordance with the protocols described in the QAPP, and that any deviations were documented and approved by the appropriate personnel.
- Field calibration, replicate and duplicate sample results are within acceptable ranges and any deviations were properly documented and approved by the appropriate personnel.

Field data verification for PCBs in soils □ill include the collection and analysis of duplicate samples via EPA Method □0□2A/3□□0C at a rate of t□o (2) samples for every ten (10) samples. Follo□ing the completion of the laboratory analysis of the duplicate PCB samples□these results □ill be compared to the results obtained in the field via the Dexsil L2000DX PCB/Chloride Analyzer. If the laboratory analytical results are greater than □0□ higher than the field screening results (after application of any necessary adjustment factor determined in the initial comparability study□as described in Section □.2 of the SAP)□three additional duplicate samples □ill be submitted for laboratory analyses from the corresponding group of ten samples the duplicate samples □ere collected. If satisfactory results are not obtained□or if additional duplicate samples are not available□corrective actions including the collection of additional samples and/or the completion of additional excavation follo□ed by additional sampling and analyses □ill be completed.

D.2.2 Laboratory Data Verification

Prior to being released from the laboratory as final, laboratory data will proceed through a tiered review process as presented in the Laboratory QA Manual (Attachment 3). Data verification starts with the analyst who performs a 100% review of the data to ensure the work was done correctly the first time. The data reduction and initial verification process will ensure that:

- Sample preparation and analysis information is correct and complete,
- Analytical results are correct and complete,
- The appropriate SOPs have been followed and are identified in the project records,
- Proper documentation procedures have been followed, and
- All non-conformances have been documented.

Following the completion of the initial verification by the analyst performing the data reduction, a systematic check of the data will be performed by an experienced peer or supervisor. This check will be performed to ensure that initial review has been completed correctly and thoroughly and will include a review of:

- Adherence to the requested analytical method SOP,
- Correct interpretation of chromatograms, mass spectra, etc.,
- Correctness of numerical input when computer programs are used (checked randomly),
- Correct identification and quantification of constituents with appropriate qualifiers,
- Numerical correctness of calculations and formulas (checked randomly),
- Acceptability of QC data,
- Documentation that instruments were operating according to method specifications (calibrations, performance checks, etc.),
- Documentation of dilution factors, standard concentrations, etc., and
- Sample holding time assessment.

A third-level review will be performed by the Laboratory Project Manager before results are submitted to clients. This review serves to verify the completeness of the data report and to ensure that project requirements are met for the analyses performed. A narrative to accompany the final report will be prepared by the Laboratory Project Manager.

D.2.3 Validation of Analytical Deliverables

USEPA Region I Tier I Plus validation of the data described in Section D.1.3 of this QAPP will be performed using U.S. EPA Region I, EPA-NE Data Validation Functional Guidelines for Evaluation of Environmental Analyses (USEPA, 1996) and U.S. EPA Region I Environmental Data Review Supplement for Regional Data Review Elements and Superfund Specific Guidance/Procedures (USEPA, 2013).

Upon completion of the validation, a report will be prepared. The Data Revie□ Report □ill document missing data/information□provides a brief description of significant data □uality issues regarding the reported laboratory QC results□includes a Data Summary Table and provides □ualification of results based on the additional QC (Section D.1.3) revie□ed.

D.2.4 Verification During Data Management

All manually entered data (e.g., field data) will be proofed 100% against the original. Electronic data will be checked after loading against laboratory data sheets for completeness and spot checked for accuracy.

D.3 Reconciliation with User Requirements

D.3.1 Comparison to Measurement Objectives

The field and laboratory data collected during this investigation will be used to achieve the objectives identified in Section A.7 of this QAPP. The QC results associated with each analytical parameter for each matrix will be compared to the measurement objectives presented in Section A.7.2 of this QAPP. Only data generated in association with QC results meeting the stated acceptance criteria (i.e., data determined to be valid) will be considered usable for decision making purposes.

D.3.1.1 Accuracy Assessment

One measure of accuracy will be %R, which is calculated for MS, surrogates, and LCS. %R for MS/MSD results will be determined according to the following equation:

$$\%R = \frac{(Amount\ in\ Spiked\ Sample - Amount\ in\ Sample)}{Known\ Amount\ Added} x\,100$$

%R for surrogates and LCS results will be determined according to the following equation:

$$\%R = \frac{Experimental\ Concentration}{Known\ Amount\ Added} x\,100$$

An additional measure of accuracy is blank contamination. The blanks associated with this project include laboratory method blanks and field blanks (e.g., trip blanks and equipment blanks). The results of the laboratory and field blanks will be compared to the objectives in stated Section A.7.2 of this QAPP. Failure to meet these objectives may indicate a systematic laboratory or field problem that should be investigated and resolved immediately. Associated data may be qualified and limitations placed on its use, depending on the magnitude of the problem.

D.3.1.2 Precision Assessment

The RPD between the MS and MSD and RPD for the field duplicate pair are calculated to compare to precision objectives (Section A.7.2 of this QAPP). The RPD will be calculated according to the following formula.

$$RPD = \frac{(Amount\ in\ Sample\,1 - Amount\ in\ Sample\,2)}{0.5\,(Amount\ in\ Sample\,1 + Amount\ in\ Sample\,2)} x\,100$$

Failure to achieve precision objectives may result in the associated data being qualified (Section D.2.3) and limitations placed upon its use.

D.3.1.3 Completeness Assessment

Completeness is the ratio of the number of valid sample results to the total number of samples analyzed with a specific matrix and/or analysis. Following completion of the analytical testing, the % completeness will be calculated by the following equation:

$$Completeness = \frac{(number\ of\ valid\ measurements)}{(number\ of\ measurements\ planned)} x\,100$$

Failure to meet the completeness objective will require an assessment to determine if the missing or invalid data are critical to achieving the project objectives. Corrective actions may include resampling or re-analysis, depending on the type of problem, logistical constraints, etc.

D.3.2 Comparison to Project Objectives

In addition to the comparison described in Section D.3.1, the data obtained will be both qualitatively and quantitatively assessed on a project-wide, matrix-specific, and parameter-specific basis. Factors to be considered in this assessment of field and laboratory data will include, but not necessarily be limited to, the following:

- Conformance to the field methodologies and SOPs proposed in the QAPP,
- Conformance to the analytical methodologies provided in the QAPP,
- Adherence to proposed sampling strategy,
- Presence of elevated detection limits due to matrix interferences or contaminants present at high concentrations,
- Unusable data sets (qualified as "R") based on data validation,
- Data sets identified as usable for limited purposes (qualified as "J") based on data validation,
- Effect of qualifiers applied as a result of data review on the ability to implement the project decision rules, and
- Status of all issues requiring corrective action, as presented in the QA reports to management.

The effect of nonconformance (procedures or requirements) or noncompliant data on project objectives will be evaluated. Minor deviations from approved field and laboratory procedures and sampling approach will likely not affect the adequacy of the data as a whole in meeting the project objectives. The assessment will also entail the identification of any remaining data gaps and need to reevaluate project decision rules.

This assessment will be performed by the AEI technical team, in conjunction with the AEI Project QA Officer, and the results presented and discussed in detail in the final report.

Attachment 1

Field Standard Operating Procedures

U.S. ENVIRONMENTAL PROTECTION AGENCY
REGION I

LOW STRESS (low flow) PURGING AND SAMPLING PROCEDURE FOR THE COLLECTION OF GROUNDWATER SAMPLES FROM MONITORING WELLS

Quality Assurance Unit
U.S. Environmental Protection Agency – Region 1
11 Technology Drive
North Chelmsford, MA 01863

The controlled version of this document is the electronic version viewed on-line only. If this is a printed copy of the document, it is an uncontrolled version and may or may not be the version currently in use.

This document contains direction developed solely to provide guidance to U.S. Environmental Protection Agency (EPA) personnel. EPA retains the discretion to adopt approaches that differ from these procedures on a case-by-case basis. The procedures set forth do not create any rights, substantive or procedural, enforceable at law by party to litigation with EPA or the United States.

Prepared by: Charles Porfert 1/19/10
(Charles Porfert, Quality Assurance Unit) Date

Approved by: Gerard Sotolongo 1-19-10
(Gerard Sotolongo, Quality Assurance Unit) Date

Revision Page

Date	Rev #	Summary of changes	Sections
7/30/96	2	Finalized	
01/19/10	3	Updated	All sections

TABLE OF CONTENTS

	Page
USE OF TERMS	4
SCOPE & APPLICATION	5
BACKGROUND FOR IMPLEMENTATION	6
HEALTH & SAFETY	7
CAUTIONS	7
PERSONNEL QUALIFICATIONS	9
EQUIPMENT AND SUPPLIES	9
EQUIPMENT/INSTRUMENT CALIBRATION	13
PRELIMINARY SITE ACTIVITIES	13
PURGING AND SAMPLING PROCEDURE	14
DECONTAMINATION	19
FIELD QUALITY CONTROL	21
FIELD LOGBOOK	21
DATA REPORT	22
REFERENCES	22
APPENDIX A PERISTALTIC PUMPS	24
APPENDIX B SUMMARY OF SAMPLING INSTRUCTIONS	25
LOW-FLOW SETUP DIAGRAM	29
APPENDIX C EXAMPLE WELL PURGING FORM	30

USE OF TERMS

Equipment blank: The equipment blank shall include the pump and the pump's tubing. If tubing is dedicated to the well, the equipment blank needs only to include the pump in subsequent sampling rounds. If the pump and tubing are dedicated to the well, the equipment blank is collected prior to its placement in the well. If the pump and tubing will be used to sample multiple wells, the equipment blank is normally collected after sampling from contaminated wells and not after background wells.

Field duplicates: Field duplicates are collected to determine precision of the sampling procedure. For this procedure, collect duplicate for each analyte group in consecutive order (VOC original, VOC duplicate, SVOC original, SVOC duplicate, etc.).

Indicator field parameters: This SOP uses field measurements of turbidity, dissolved oxygen, specific conductance, temperature, pH, and oxidation/reduction potential (ORP) as indicators of when purging operations are sufficient and sample collection may begin.

Matrix Spike/Matrix Spike Duplicates: Used by the laboratory in its quality assurance program. Consult the laboratory for the sample volume to be collected.

Poteniometric Surface: The level to which water rises in a tightly cased well constructed in a confined aquifer. In an unconfined aquifer, the potentiometric surface is the water table.

QAPP: Quality Assurance Project Plan

SAP: Sampling and Analysis Plan

SOP: Standard operating procedure

Stabilization: A condition that is achieved when all indicator field parameter measurements are sufficiently stable (as described in the "Monitoring Indicator Field Parameters" section) to allow sample collection to begin.

Temperature blank: A temperature blank is added to each sample cooler. The blank is measured upon receipt at the laboratory to assess whether the samples were properly cooled during transit.

Trip blank (VOCs): Trip blank is a sample of analyte-free water taken to the sampling site and returned to the laboratory. The trip blanks (one pair) are added to each sample cooler that contains VOC samples.

SCOPE & APPLICATION

The goal of this groundwater sampling procedure is to collect water samples that reflect the total mobile organic and inorganic loads (dissolved and colloidal sized fractions) transported through the subsurface under ambient flow conditions, with minimal physical and chemical alterations from sampling operations. This standard operating procedure (SOP) for collecting groundwater samples will help ensure that the project's data quality objectives (DQOs) are met under certain low-flow conditions.

The SOP emphasizes the need to minimize hydraulic stress at the well-aquifer interface by maintaining low water-level drawdowns, and by using low pumping rates during purging and sampling operations. Indicator field parameters (e.g., dissolved oxygen, pH, etc.) are monitored during purging in order to determine when sample collection may begin. Samples properly collected using this SOP are suitable for analysis of groundwater contaminants (volatile and semi-volatile organic analytes, dissolved gases, pesticides, PCBs, metals and other inorganics), or naturally occurring analytes. This SOP is based on Puls, and Barcelona (1996).

This procedure is designed for monitoring wells with an inside diameter (1.5-inches or greater) that can accommodate a positive lift pump with a screen length or open interval ten feet or less and with a water level above the top of the screen or open interval (Hereafter, the "screen or open interval" will be referred to only as "screen interval"). This SOP is not applicable to other well-sampling conditions.

While the use of dedicated sampling equipment is not mandatory, dedicated pumps and tubing can reduce sampling costs significantly by streamlining sampling activities and thereby reducing the overall field costs.

The goal of this procedure is to emphasize the need for consistency in deploying and operating equipment while purging and sampling monitoring wells during each sampling event. This will help to minimize sampling variability.

This procedure describes a general framework for groundwater sampling. Other site specific information (hydrogeological context, conceptual site model (CSM), DQOs, etc.) coupled with systematic planning must be added to the procedure in order to develop an appropriate site specific SAP/QAPP. In addition, the site specific SAP/QAPP must identify the specific equipment that will be used to collect the groundwater samples.

This procedure does not address the collection of water or free product samples from wells containing free phase LNAPLs and/or DNAPLs (light or dense non-aqueous phase

liquids). For this type of situation, the reader may wish to check: Cohen, and Mercer (1993) or other pertinent documents.

This SOP is to be used when collecting groundwater samples from monitoring wells at all Superfund, Federal Facility and RCRA sites in Region 1 under the conditions described herein. Request for modification of this SOP, in order to better address specific situations at individual wells, must include adequate technical justification for proposed changes. All changes and modifications must be approved and included in a revised SAP/QAPP before implementation in field.

BACKGROUND FOR IMPLEMENTATION

It is expected that the monitoring well screen has been properly located (both laterally and vertically) to intercept existing contaminant plume(s) or along flow paths of potential contaminant migration. Problems with inappropriate monitoring well placement or faulty/improper well installation cannot be overcome by even the best water sampling procedures. This SOP presumes that the analytes of interest are moving (or will potentially move) primarily through the more permeable zones intercepted by the screen interval.

Proper well construction, development, and operation and maintenance cannot be overemphasized. The use of installation techniques that are appropriate to the hydrogeologic setting of the site often prevent "problem well" situations from occurring. During well development, or redevelopment, tests should be conducted to determine the hydraulic characteristics of the monitoring well. The data can then be used to set the purging/sampling rate, and provide a baseline for evaluating changes in well performance and the potential need for well rehabilitation. Note: if this installation data or well history (construction and sampling) is not available or discoverable, for all wells to be sampled, efforts to build a sampling history should commence with the next sampling event.

The pump intake should be located within the screen interval and at a depth that will remain under water at all times. It is recommended that the intake depth and pumping rate remain the same for all sampling events. The mid-point or the lowest historical midpoint of the saturated screen length is often used as the location of the pump intake. For new wells, or for wells without pump intake depth information, the site's SAP/QAPP must provide clear reasons and instructions on how the pump intake depth(s) will be selected, and reason(s) for the depth(s) selected. If the depths to top and bottom of the well screen are not known, the SAP/QAPP will need to describe how the sampling depth will be determined and how the data can be used.

Stabilization of indicator field parameters is used to indicate that conditions are suitable for sampling to begin. Achievement of turbidity levels of less than 5 NTU, and stable drawdowns of less than 0.3 feet, while desirable, are not mandatory. Sample collection

may still take place provided the indicator field parameter criteria in this procedure are met. If after 2 hours of purging indicator field parameters have not stabilized, one of three optional courses of action may be taken: a) continue purging until stabilization is achieved, b) discontinue purging, do not collect any samples, and record in log book that stabilization could not be achieved (documentation must describe attempts to achieve stabilization), c) discontinue purging, collect samples and provide full explanation of attempts to achieve stabilization (note: there is a risk that the analytical data obtained, especially metals and strongly hydrophobic organic analytes, may reflect a sampling bias and therefore, the data may not meet the data quality objectives of the sampling event).

It is recommended that low-flow sampling be conducted when the air temperature is above 32°F (0°C). If the procedure is used below 32°F, special precautions will need to be taken to prevent the groundwater from freezing in the equipment. Because sampling during freezing temperatures may adversely impact the data quality objectives, the need for water sample collection during months when these conditions are likely to occur should be evaluated during site planning and special sampling measures may need to be developed. Ice formation in the flow-through-cell will cause the monitoring probes to act erratically. A transparent flow-through-cell needs to be used to observe if ice is forming in the cell. If ice starts to form on the other pieces of the sampling equipment, additional problems may occur.

HEALTH & SAFETY

When working on-site, comply with all applicable OSHA requirements and the site's health/safety procedures. All proper personal protection clothing and equipment are to be worn. Some samples may contain biological and chemical hazards. These samples should be handled with suitable protection to skin, eyes, etc.

CAUTIONS

The following cautions need to be considered when planning to collect groundwater samples when the below conditions occur.

If the groundwater degasses during purging of the monitoring well, dissolved gases and VOCs will be lost. When this happens, the groundwater data for dissolved gases (e.g., methane, ethene, ethane, dissolved oxygen, etc.) and VOCs will need to be qualified. Some conditions that can promote degassing are the use of a vacuum pump (e.g., peristaltic pumps), changes in aperture along the sampling tubing, and squeezing/pinching the pump's tubing which results in a pressure change.

When collecting the samples for dissolved gases and VOCs analyses, avoid aerating the groundwater in the pump's tubing. This can cause loss of the dissolved gases and VOCs in

the groundwater. Having the pump's tubing completely filled prior to sampling will avoid this problem when using a centrifugal pump or peristaltic pump.

Direct sun light and hot ambient air temperatures may cause the groundwater in the tubing and flow-through-cell to heat up. This may cause the groundwater to degas which will result in loss of VOCs and dissolved gases. When sampling under these conditions, the sampler will need to shade the equipment from the sunlight (e.g., umbrella, tent, etc.). If possible, sampling on hot days, or during the hottest time of the day, should be avoided. The tubing exiting the monitoring well should be kept as short as possible to avoid the sun light or ambient air from heating up the groundwater.

Thermal currents in the monitoring well may cause vertical mixing of water in the well bore. When the air temperature is colder than the groundwater temperature, it can cool the top of the water column. Colder water which is denser than warm water sinks to the bottom of the well and the warmer water at the bottom of the well rises, setting up a convention cell. "During low-flow sampling, the pumped water may be a mixture of convecting water from within the well casing and aquifer water moving inward through the screen. This mixing of water during low-flow sampling can substantially increase equilibration times, can cause false stabilization of indicator parameters, can give false indication of redox state, and can provide biological data that are not representative of the aquifer conditions" (Vroblesky 2007).

Failure to calibrate or perform proper maintenance on the sampling equipment and measurement instruments (e.g., dissolved oxygen meter, etc.) can result in faulty data being collected.

Interferences may result from using contaminated equipment, cleaning materials, sample containers, or uncontrolled ambient/surrounding air conditions (e.g., truck/vehicle exhaust nearby).

Cross contamination problems can be eliminated or minimized through the use of dedicated sampling equipment and/or proper planning to avoid ambient air interferences. Note that the use of dedicated sampling equipment can also significantly reduce the time needed to complete each sampling event, will promote consistency in the sampling, and may reduce sampling bias by having the pump's intake at a constant depth.

Clean and decontaminate all sampling equipment prior to use. All sampling equipment needs to be routinely checked to be free from contaminants and equipment blanks collected to ensure that the equipment is free of contaminants. Check the previous equipment blank data for the site (if they exist) to determine if the previous cleaning procedure removed the contaminants. If contaminants were detected and they are a concern, then a more vigorous cleaning procedure will be needed.

PERSONNEL QUALIFICATIONS

All field samplers working at sites containing hazardous waste must meet the requirements of the OSHA regulations. OSHA regulations may require the sampler to take the 40 hour OSHA health and safety training course and a refresher course prior to engaging in any field activities, depending upon the site and field conditions.

The field samplers must be trained prior to the use of the sampling equipment, field instruments, and procedures. Training is to be conducted by an experienced sampler before initiating any sampling procedure.

The entire sampling team needs to read, and be familiar with, the site Health and Safety Plan, all relevant SOPs, and SAP/QAPP (and the most recent amendments) before going onsite for the sampling event. It is recommended that the field sampling leader attest to the understanding of these site documents and that it is recorded.

EQUIPMENT AND SUPPLIES

A. Informational materials for sampling event

A copy of the current Health and Safety Plan, SAP/QAPP, monitoring well construction data, location map(s), field data from last sampling event, manuals for sampling, and the monitoring instruments' operation, maintenance, and calibration manuals should be brought to the site.

B. Well keys.

C. Extraction device

Adjustable rate, submersible pumps (e.g., centrifugal, bladder, etc.) which are constructed of stainless steel or Teflon are preferred. Note: if extraction devices constructed of other materials are to be used, adequate information must be provided to show that the substituted materials do not leach contaminants nor cause interferences to the analytical procedures to be used. Acceptance of these materials must be obtained before the sampling event.

If bladder pumps are selected for the collection of VOCs and dissolved gases, the pump setting should be set so that one pulse will deliver a water volume that is sufficient to fill a 40 mL VOC vial. This is not mandatory, but is considered a "best practice". For the proper operation, the bladder pump will need a minimum amount of water above the pump; consult the manufacturer for the recommended submergence. The pump's recommended submergence value should be determined during the planning stage, since it may influence well construction and placement of dedicated pumps where water-level fluctuations are significant.

Adjustable rate, peristaltic pumps (suction) are to be used with caution when collecting samples for VOCs and dissolved gases (e.g., methane, carbon dioxide, etc.) analyses. Additional information on the use of peristaltic pumps can be found in Appendix A. If peristaltic pumps are used, the inside diameter of the rotor head tubing needs to match the inside diameter of the tubing installed in the monitoring well.

Inertial pumping devices (motor driven or manual) are not recommended. These devices frequently cause greater disturbance during purging and sampling, and are less easily controlled than submersible pumps (potentially increasing turbidity and sampling variability; etc.). This can lead to sampling results that are adversely affected by purging and sampling operations, and a higher degree of data variability.

D. Tubing

Teflon or Teflon-lined polyethylene tubing are preferred when sampling is to include VOCs, SVOCs, pesticides, PCBs and inorganics. Note: if tubing constructed of other materials is to be used, adequate information must be provided to show that the substituted materials do not leach contaminants nor cause interferences to the analytical procedures to be used. Acceptance of these materials must be obtained before the sampling event.

PVC, polypropylene or polyethylene tubing may be used when collecting samples for metal and other inorganics analyses.

The use of 1/4 inch or 3/8 inch (inside diameter) tubing is recommended. This will help ensure that the tubing remains liquid filled when operating at very low pumping rates when using centrifugal and peristaltic pumps.

Silastic tubing should be used for the section around the rotor head of a peristaltic pump. It should be less than a foot in length. The inside diameter of the tubing used at the pump rotor head must be the same as the inside diameter of tubing placed in the well. A tubing connector is used to connect the pump rotor head tubing to the well tubing. Alternatively, the two pieces of tubing can be connected to each other by placing the one end of the tubing inside the end of the other tubing. The tubing must not be reused.

E. The water level measuring device

Electronic "tape", pressure transducer, water level sounder/level indicator, etc. should be capable of measuring to 0.01 foot accuracy. Recording pressure transducers, mounted above the pump, are especially helpful in tracking water levels during pumping operations, but their use must include check measurements with a water level "tape" at the start and end of each sampling event.

F. Flow measurement supplies

Graduated cylinder (size according to flow rate) and stopwatch usually will suffice.

Large graduated bucket used to record total water purged from the well.

G. Interface probe

To be used to check on the presence of free phase liquids (LNAPL, or DNAPL) before purging begins (as needed).

H. Power source (generator, nitrogen tank, battery, etc.)

When a gasoline generator is used, locate it downwind and at least 30 feet from the well so that the exhaust fumes do not contaminate samples.

I. Indicator field parameter monitoring instruments

Use of a multi-parameter instrument capable of measuring pH, oxidation/reduction potential (ORP), dissolved oxygen (DO), specific conductance, temperature, and coupled with a flow-through-cell is required when measuring all indicator field parameters, except turbidity. Turbidity is collected using a separate instrument. Record equipment/instrument identification (manufacturer, and model number).

Transparent, small volume flow-through-cells (e.g., 250 mLs or less) are preferred. This allows observation of air bubbles and sediment buildup in the cell, which can interfere with the operation of the monitoring instrument probes, to be easily detected. A small volume cell facilitates rapid turnover of water in the cell between measurements of the indicator field parameters.

It is recommended to use a flow-through-cell and monitoring probes from the same manufacturer and model to avoid incompatibility between the probes and flow-through-cell.

Turbidity samples are collected before the flow-through-cell. A "T" connector coupled with a valve is connected between the pump's tubing and flow-through-cell. When a turbidity measurement is required, the valve is opened to allow the groundwater to flow into a container. The valve is closed and the container sample is then placed in the turbidimeter.

Standards are necessary to perform field calibration of instruments. A minimum of two standards are needed to bracket the instrument measurement range for all parameters except ORP which use a Zobell solution as a standard. For dissolved oxygen, a wet sponge used for the 100% saturation and a zero dissolved oxygen solution are used for the calibration.

Barometer (used in the calibration of the Dissolved Oxygen probe) and the conversion formula to convert the barometric pressure into the units of measure used by the Dissolved Oxygen meter are needed.

J. Decontamination supplies

Includes (for example) non-phosphate detergent, distilled/deionized water, isopropyl alcohol, etc.

K. Record keeping supplies

Logbook(s), well purging forms, chain-of-custody forms, field instrument calibration forms, etc.

L. Sample bottles

M. Sample preservation supplies (as required by the analytical methods)

N. Sample tags or labels

O. PID or FID instrument

If appropriate, to detect VOCs for health and safety purposes, and provide qualitative field evaluations.

P. Miscellaneous Equipment

Equipment to keep the sampling apparatus shaded in the summer (e.g., umbrella) and from freezing in the winter. If the pump's tubing is allowed to heat up in the warm weather, the cold groundwater may degas as it is warmed in the tubing.

EQUIPMENT/INSTRUMENT CALIBRATION

Prior to the sampling event, perform maintenance checks on the equipment and instruments according to the manufacturer's manual and/or applicable SOP. This will ensure that the equipment/instruments are working properly before they are used in the field.

Prior to sampling, the monitoring instruments must be calibrated and the calibration documented. The instruments are calibrated using U.S Environmental Protection Agency Region 1 *Calibration of Field Instruments (temperature, pH, dissolved oxygen, conductivity/specific conductance, oxidation/reduction [ORP], and turbidity),* January 19, 2010, or latest version or from one of the methods listed in 40CFR136, 40CFR141 and SW-846.

The instruments shall be calibrated at the beginning of each day. If the field measurement falls outside the calibration range, the instrument must be re-calibrated so that all measurements fall within the calibration range. At the end of each day, a calibration check is performed to verify that instruments remained in calibration throughout the day. This check is performed while the instrument is in measurement mode, not calibration mode. If the field instruments are being used to monitor the natural attenuation parameters, then a calibration check at mid-day is highly recommended to ensure that the instruments did not drift out of calibration. Note: during the day if the instrument reads zero or a negative number for dissolved oxygen, pH, specific conductance, or turbidity (negative value only), this indicates that the instrument drifted out of calibration or the instrument is malfunctioning. If this situation occurs the data from this instrument will need to be qualified or rejected.

PRELIMINARY SITE ACTIVITIES (as applicable)

Check the well for security (damage, evidence of tampering, missing lock, etc.) and record pertinent observations (include photograph as warranted).

If needed lay out sheet of clean polyethylene for monitoring and sampling equipment, unless equipment is elevated above the ground (e.g., on a table, etc.).

Remove well cap and if appropriate measure VOCs at the rim of the well with a PID or FID instrument and record reading in field logbook or on the well purge form.

If the well casing does not have an established reference point (usually a V-cut or indelible mark in the well casing), make one. Describe its location and record the date of the mark in the logbook (consider a photographic record as well). All water level measurements must be recorded relative to this reference point (and the altitude of this point should be determined using techniques that are appropriate to site's DQOs.

If water-table or potentiometric surface map(s) are to be constructed for the sampling event, perform synoptic water level measurement round (in the shortest possible time) before any purging and sampling activities begin. If possible, measure water level depth (to 0.01 ft.) and total well depth (to 0.1 ft.) the day before sampling begins, in order to allow for re-settlement of any particulates in the water column. This is especially important for those wells that have not been recently sampled because sediment buildup in the well may require the well to be redeveloped. If measurement of total well depth is not made the day before, it should be measured after sampling of the well is complete. All measurements must be taken from the established referenced point. Care should be taken to minimize water column disturbance.

Check newly constructed wells for the presence of LNAPLs or DNAPLs before the initial sampling round. If none are encountered, subsequent check measurements with an interface probe may not be necessary unless analytical data or field analysis signal a worsening situation. This SOP cannot be used in the presence of LNAPLs or DNAPLs. If NAPLs are present, the project team must decide upon an alternate sampling method. All project modifications must be approved and documented prior to implementation.

If available check intake depth and drawdown information from previous sampling event(s) for each well. Duplicate, to the extent practicable, the intake depth and extraction rate (use final pump dial setting information) from previous event(s). If changes are made in the intake depth or extraction rate(s) used during previous sampling event(s), for either portable or dedicated extraction devices, record new values, and explain reasons for the changes in the field logbook.

PURGING AND SAMPLING PROCEDURE

Purging and sampling wells in order of increasing chemical concentrations (known or anticipated) are preferred.

The use of dedicated pumps is recommended to minimize artificial mobilization and entrainment of particulates each time the well is sampled. Note that the use of dedicated sampling equipment can also significantly reduce the time needed to complete each

sampling event, will promote consistency in the sampling, and may reduce sampling bias by having the pump's intake at a constant depth.

A. Initial Water Level

Measure the water level in the well before installing the pump if a non-dedicated pump is being used. The initial water level is recorded on the purge form or in the field logbook.

B. Install Pump

Lower pump, safety cable, tubing and electrical lines slowly (to minimize disturbance) into the well to the appropriate depth (may not be the mid-point of the screen/open interval). The Sampling and Analysis Plan/Quality Assurance Project Plan should specify the sampling depth (used previously), or provide criteria for selection of intake depth for each new well. If possible keep the pump intake at least two feet above the bottom of the well, to minimize mobilization of particulates present in the bottom of the well.

Pump tubing lengths, above the top of well casing should be kept as short as possible to minimize heating the groundwater in the tubing by exposure to sun light and ambient air temperatures. Heating may cause the groundwater to degas, which is unacceptable for the collection of samples for VOC and dissolved gases analyses.

C. Measure Water Level

Before starting pump, measure water level. Install recording pressure transducer, if used to track drawdowns, to initialize starting condition.

D. Purge Well

From the time the pump starts purging and until the time the samples are collected, the purged water is discharged into a graduated bucket to determine the total volume of groundwater purged. This information is recorded on the purge form or in the field logbook.

Start the pump at low speed and slowly increase the speed until discharge occurs. Check water level. Check equipment for water leaks and if present fix or replace the affected equipment. Try to match pumping rate used during previous sampling event(s). Otherwise, adjust pump speed until there is little or no water level drawdown. If the minimal drawdown that can be achieved exceeds 0.3 feet, but remains stable, continue purging.

Monitor and record the water level and pumping rate every five minutes (or as appropriate) during purging. Record any pumping rate adjustments (both time and flow rate). Pumping rates should, as needed, be reduced to the minimum capabilities of the pump to ensure stabilization of the water level. Adjustments are best made in the first fifteen minutes of pumping in order to help minimize purging time. During pump start-up, drawdown may exceed the 0.3 feet target and then "recover" somewhat as pump flow adjustments are made. Purge volume calculations should utilize stabilized drawdown value, not the initial drawdown. If the initial water level is above the top of the screen do not allow the water level to fall into the well screen. The final purge volume must be greater than the stabilized drawdown volume plus the pump's tubing volume. If the drawdown has exceeded 0.3 feet and stabilizes, calculate the volume of water between the initial water level and the stabilized water level. Add the volume of the water which occupies the pump's tubing to this calculation. This combined volume of water needs to be purged from the well after the water level has stabilized before samples are collected.

Avoid the use of constriction devices on the tubing to decrease the flow rate because the constrictor will cause a pressure difference in the water column. This will cause the groundwater to degas and result in a loss of VOCs and dissolved gasses in the groundwater samples.

Note: the flow rate used to achieve a stable pumping level should remain constant while monitoring the indicator parameters for stabilization and while collecting the samples.

Wells with low recharge rates may require the use of special pumps capable of attaining very low pumping rates (e.g., bladder, peristaltic), and/or the use of dedicated equipment. For new monitoring wells, or wells where the following situation has not occurred before, if the recovery rate to the well is less than 50 mL/min., or the well is being essentially dewatered during purging, the well should be sampled as soon as the water level has recovered sufficiently to collect the volume needed for all anticipated samples. The project manager or field team leader will need to make the decision when samples should be collected, how the sample is to be collected, and the reasons recorded on the purge form or in the field logbook. A water level measurement needs to be performed and recorded before samples are collected. If the project manager decides to collect the samples using the pump, it is best during this recovery period that the pump intake tubing not be removed, since this will aggravate any turbidity problems. Samples in this specific situation may be collected without stabilization of indicator field parameters. Note that field conditions and efforts to overcome problematic situations must be recorded in order to support field decisions to deviate from normal procedures described in this SOP. If this type of problematic situation persists in a well, then water sample collection should be changed to a passive or no-purge method, if consistent with the site's DQOs, or have a new well installed.

E. Monitor Indicator Field Parameters

After the water level has stabilized, connect the "T" connector with a valve and the flow-through-cell to monitor the indicator field parameters. If excessive turbidity is anticipated or encountered with the pump startup, the well may be purged for a while without connecting up the flow-through-cell, in order to minimize particulate buildup in the cell (This is a judgment call made by the sampler). Water level drawdown measurements should be made as usual. If possible, the pump may be installed the day before purging to allow particulates that were disturbed during pump insertion to settle.

During well purging, monitor indicator field parameters (turbidity, temperature, specific conductance, pH, ORP, DO) at a frequency of five minute intervals or greater. The pump's flow rate must be able to "turn over" at least one flow-through-cell volume between measurements (for a 250 mL flow-through-cell with a flow rate of 50 mLs/min., the monitoring frequency would be every five minutes; for a 500 mL flow-through-cell it would be every ten minutes). If the cell volume cannot be replaced in the five minute interval, then the time between measurements must be increased accordingly. Note: during the early phase of purging emphasis should be put on minimizing and stabilizing pumping stress, and recording those adjustments followed by stabilization of indicator parameters. Purging is considered complete and sampling may begin when all the above indicator field parameters have stabilized. Stabilization is considered to be achieved when three consecutive readings are within the following limits:

Turbidity (10% for values greater than 5 NTU; if three Turbidity values are less than 5 NTU, consider the values as stabilized),
Dissolved Oxygen (10% for values greater than 0.5 mg/L, if three Dissolved Oxygen values are less than 0.5 mg/L, consider the values as stabilized),
Specific Conductance (3%),
Temperature (3%),
pH (± 0.1 unit),
Oxidation/Reduction Potential (±10 millivolts).

All measurements, except turbidity, must be obtained using a flow-through-cell. Samples for turbidity measurements are obtained before water enters the flow-through-cell. Transparent flow-through-cells are preferred, because they allow field personnel to watch for particulate build-up within the cell. This build-up may affect indicator field parameter values measured within the cell. If the cell needs to be cleaned during purging operations, continue pumping and disconnect cell for cleaning, then reconnect after cleaning and continue monitoring activities. Record start and stop times and give a brief description of cleaning activities.

The flow-through-cell must be designed in a way that prevents gas bubble entrapment in the cell. Placing the flow-through-cell at a 45 degree angle with the port facing upward can help remove bubbles from the flow-through-cell (see Appendix B Low-Flow Setup Diagram). All during the measurement process, the flow-through-cell must remain free of any gas bubbles. Otherwise, the monitoring probes may act erratically. When the pump is turned off or cycling on/off (when using a bladder pump), water in the cell must not drain out. Monitoring probes must remain submerged in water at all times.

F. Collect Water Samples

When samples are collected for laboratory analyses, the pump's tubing is disconnected from the "T" connector with a valve and the flow-through-cell. The samples are collected directly from the pump's tubing. Samples must not be collected from the flow-through-cell or from the "T" connector with a valve.

VOC samples are normally collected first and directly into pre-preserved sample containers. However, this may not be the case for all sampling locations; the SAP/QAPP should list the order in which the samples are to be collected based on the project's objective(s). Fill all sample containers by allowing the pump discharge to flow gently down the inside of the container with minimal turbulence.

If the pump's flow rate is too high to collect the VOC/dissolved gases samples, collect the other samples first. Lower the pump's flow rate to a reasonable rate and collect the VOC/dissolved gases samples and record the new flow rate.

During purging and sampling, the centrifugal/peristaltic pump tubing must remain filled with water to avoid aeration of the groundwater. It is recommended that 1/4 inch or 3/8 inch (inside diameter) tubing be used to help insure that the sample tubing remains water filled. If the pump tubing is not completely filled to the sampling point, use the following procedure to collect samples: collect non-VOC/dissolved gases samples first, then increase flow rate slightly until the water completely fills the tubing, collect the VOC/dissolved gases samples, and record new drawdown depth and flow rate.

For bladder pumps that will be used to collect VOC or dissolved gas samples, it is recommended that the pump be set to deliver long pulses of water so that one pulse will fill a 40 mL VOC vial.

Use pre-preserved sample containers or add preservative, as required by analytical methods, to the samples immediately after they are collected. Check the analytical methods (e.g. EPA SW-846, 40 CFR 136, water supply, etc.) for additional information on preservation.

If determination of filtered metal concentrations is a sampling objective, collect filtered water samples using the same low flow procedures. The use of an in-line filter (transparent housing preferred) is required, and the filter size (0.45 μm is commonly used) should be based on the sampling objective. Pre-rinse the filter with groundwater prior to sample collection. Make sure the filter is free of air bubbles before samples are collected. Preserve the filtered water sample immediately. Note: filtered water samples are not an acceptable substitute for unfiltered samples when the monitoring objective is to obtain chemical concentrations of total mobile contaminants in groundwater for human health or ecological risk calculations.

Label each sample as collected. Samples requiring cooling will be placed into a cooler with ice or refrigerant for delivery to the laboratory. Metal samples after acidification to a pH less than 2 do not need to be cooled.

G. Post Sampling Activities

If a recording pressure transducer is used to track drawdown, re-measure water level with tape.

After collection of samples, the pump tubing may be dedicated to the well for re-sampling (by hanging the tubing inside the well), decontaminated, or properly discarded.

Before securing the well, measure and record the well depth (to 0.1 ft.), if not measured the day before purging began. Note: measurement of total well depth annually is usually sufficient after the initial low stress sampling event. However, a greater frequency may be needed if the well has a "silting" problem or if confirmation of well identity is needed.

Secure the well.

DECONTAMINATION

Decontaminate sampling equipment prior to use in the first well and then following sampling of each well. Pumps should not be removed between purging and sampling operations. The pump, tubing, support cable and electrical wires which were in contact with the well should be decontaminated by one of the procedures listed below.

The use of dedicated pumps and tubing will reduce the amount of time spent on decontamination of the equipment. If dedicated pumps and tubing are used, only the initial sampling event will require decontamination of the pump and tubing.

Note if the previous equipment blank data showed that contaminant(s) were present after using the below procedure or the one described in the SAP/QAPP, a more vigorous procedure may be needed.

Procedure 1

Decontaminating solutions can be pumped from either buckets or short PVC casing sections through the pump and tubing. The pump may be disassembled and flushed with the decontaminating solutions. It is recommended that detergent and alcohol be used sparingly in the decontamination process and water flushing steps be extended to ensure that any sediment trapped in the pump is removed. The pump exterior and electrical wires must be rinsed with the decontaminating solutions, as well. The procedure is as follows:

Flush the equipment/pump with potable water.

Flush with non-phosphate detergent solution. If the solution is recycled, the solution must be changed periodically.

Flush with potable or distilled/deionized water to remove all of the detergent solution. If the water is recycled, the water must be changed periodically.

Optional - flush with isopropyl alcohol (pesticide grade; must be free of ketones {e.g., acetone}) or with methanol. This step may be required if the well is highly contaminated or if the equipment blank data from the previous sampling event show that the level of contaminants is significant.

Flush with distilled/deionized water. This step must remove all traces of alcohol (if used) from the equipment. The final water rinse must not be recycled.

Procedure 2

Steam clean the outside of the submersible pump.

Pump hot potable water from the steam cleaner through the inside of the pump. This can be accomplished by placing the pump inside a three or four inch diameter PVC pipe with end cap. Hot water from the steam cleaner jet will be directed inside the PVC pipe and the pump exterior will be cleaned. The hot water from the steam cleaner will then be pumped from the PVC pipe through the pump and collected into another container. Note: additives or solutions should not be added to the steam cleaner.

Pump non-phosphate detergent solution through the inside of the pump. If the solution is recycled, the solution must be changed periodically.

Pump potable water through the inside of the pump to remove all of the detergent solution. If the solution is recycled, the solution must be changed periodically.

Pump distilled/deionized water through the pump. The final water rinse must not be recycled.

FIELD QUALITY CONTROL

Quality control samples are required to verify that the sample collection and handling process has not compromised the quality of the groundwater samples. All field quality control samples must be prepared the same as regular investigation samples with regard to sample volume, containers, and preservation. Quality control samples include field duplicates, equipment blanks, matrix spike/matrix spike duplicates, trip blanks (VOCs), and temperature blanks.

FIELD LOGBOOK

A field log shall be kept to document all groundwater field monitoring activities (see Appendix C, example table), and record the following for each well:

Site name, municipality, state.

Well identifier, latitude-longitude or state grid coordinates.

Measuring point description (e.g., north side of PVC pipe).

Well depth, and measurement technique.

Well screen length.

Pump depth.

Static water level depth, date, time and measurement technique.

Presence and thickness of immiscible liquid (NAPL) layers and detection method.

Pumping rate, drawdown, indicator parameters values, calculated or measured total volume pumped, and clock time of each set of measurements.

Type of tubing used and its length.

Type of pump used.

Clock time of start and end of purging and sampling activity.

Types of sample bottles used and sample identification numbers.

Preservatives used.

Parameters requested for analyses.

Field observations during sampling event.

Name of sample collector(s).

Weather conditions, including approximate ambient air temperature.

QA/QC data for field instruments.

Any problems encountered should be highlighted.

Description of all sampling/monitoring equipment used, including trade names, model number, instrument identification number, diameters, material composition, etc.

DATA REPORT

Data reports are to include laboratory analytical results, QA/QC information, field indicator parameters measured during purging, field instrument calibration information, and whatever other field logbook information is needed to allow for a full evaluation of data usability.

Note: the use of trade, product, or firm names in this sampling procedure is for descriptive purposes only and does not constitute endorsement by the U.S. EPA.

REFERENCES

Cohen, R.M. and J.W. Mercer, 1993, *DNAPL Site Evaluation*; C.K. Smoley (CRC Press), Boca Raton, Florida.

Robert W. Puls and Michael J. Barcelona, *Low-Flow (Minimal Drawdown) Ground-Water Sampling Procedures*, April 1996 (EPA/540/S-95/504).

U.S. Environmental Protection Agency, 1992, *RCRA Ground-Water Monitoring: Draft Technical Guidance*; Washington, DC (EPA/530-R-93-001).

U.S. Environmental Protection Agency, 1987, *A Compendium of Superfund Field Operations Methods*; Washington, DC (EPA/540/P-87/001).

U.S Environmental Protection Agency, Region 1, *Calibration of Field Instruments (temperature, pH, dissolved oxygen, conductivity/specific conductance, oxidation/reduction [ORP], and turbidity),* January 19, 2010 or latest version.

U.S Environmental Protection Agency, EPA SW-846.

U.S Environmental Protection Agency, 40 CFR 136.

U.S Environmental Protection Agency, 40 CFR 141.

Vroblesky, Don A., Clifton C. Casey, and Mark A. Lowery, Summer 2007, Influence of Dissolved Oxygen Convection on Well Sampling, *Ground Water Monitoring & Remediation* 27, no. 3: 49-58.

APPENDIX A
PERISTALTIC PUMPS

Before selecting a peristaltic pump to collect groundwater samples for VOCs and/or dissolved gases (e.g., methane, carbon dioxide, etc.) consideration should be given to the following:

- The decision of whether or not to use a peristaltic pump is dependent on the intended use of the data.
- If the additional sampling error that may be introduced by this device is NOT of concern for the VOC/dissolved gases data's intended use, then this device may be acceptable.
- If minor differences in the groundwater concentrations could effect the decision, such as to continue or terminate groundwater cleanup or whether the cleanup goals have been reached, then this device should NOT be used for VOC/dissolved gases sampling. In these cases, centrifugal or bladder pumps are a better choice for more accurate results.

EPA and USGS have documented their concerns with the use of the peristaltic pumps to collect water sample in the below documents.

- "Suction Pumps are not recommended because they may cause degassing, pH modification, and loss of volatile compounds" *A Compendium of Superfund Field Operations Methods*, EPA/540/P-87/001, December 1987.
- "The agency does not recommend the use of peristaltic pumps to sample ground water particularly for volatile organic analytes" *RCRA Ground-Water Monitoring Draft Technical Guidance*, EPA Office of Solid Waste, November 1992.
- "The peristaltic pump is limited to shallow applications and can cause degassing resulting in alteration of pH, alkalinity, and volatiles loss", *Low-flow (Minimal drawdown) Ground-Water Sampling Procedures*, by Robert Puls & Michael Barcelona, April 1996, EPA/540/S-95/504.
- "Suction-lift pumps, such as peristaltic pumps, can operate at a very low pumping rate; however, using negative pressure to lift the sample can result in the loss of volatile analytes", USGS Book 9 Techniques of Water-Resources Investigation, Chapter A4. (Version 2.0, 9/2006).

APPENDIX B

SUMMARY OF SAMPLING INSTRUCTIONS

These instructions are for using an adjustable rate, submersible pump or a peristaltic pump with the pump's intake placed at the midpoint of a 10 foot or less well screen or an open interval. The water level in the monitoring well is above the top of the well screen or open interval, the ambient temperature is above 32°F, and the equipment is not dedicated. Field instruments are already calibrated. The equipment is setup according to the diagram at the end of these instructions.

1. Review well installation information. Record well depth, length of screen or open interval, and depth to top of the well screen. Determine the pump's intake depth (e.g., mid-point of screen/open interval).

2. On the day of sampling, check security of the well casing, perform any safety checks needed for the site, lay out a sheet of polyethylene around the well (if necessary), and setup the equipment. If necessary a canopy or an equivalent item can be setup to shade the pump's tubing and flow-through-cell from the sun light to prevent the sun light from heating the groundwater.

3. Check well casing for a reference mark. If missing, make a reference mark. Measure the water level (initial) to 0.01 ft. and record this information.

4. Install the pump's intake to the appropriate depth (e.g., midpoint) of the well screen or open interval. Do not turn-on the pump at this time.

5. Measure water level and record this information.

6. Turn-on the pump and discharge the groundwater into a graduated waste bucket. Slowly increase the flow rate until the water level starts to drop. Reduce the flow rate slightly so the water level stabilizes. Record the pump's settings. Calculate the flow rate using a graduated container and a stop watch. Record the flow rate. Do not let the water level drop below the top of the well screen.

If the groundwater is highly turbid or colored, continue to discharge the water into the bucket until the water clears (visual observation); this usually takes a few minutes. The turbid or colored water is usually from the well being disturbed during the pump installation. If the water does not clear, then you need to make a choice whether to continue purging the well (hoping that it will clear after a reasonable time) or continue to

the next step. Note, it is sometimes helpful to install the pump the day before the sampling event so that the disturbed materials in the well can settle out.

If the water level drops to the top of the well screen during the purging of the well, stop purging the well, and do the following:

> Wait for the well to recharge to a sufficient volume so samples can be collected. This may take awhile (pump maybe removed from well, if turbidity is not a problem). The project manager will need to make the decision when samples should be collected and the reasons recorded in the site's log book. A water level measurement needs to be performed and recorded before samples are collected. When samples are being collected, the water level must not drop below the top of the screen or open interval. Collect the samples from the pump's tubing. Always collect the VOCs and dissolved gases samples first. Normally, the samples requiring a small volume are collected before the large volume samples are collected just in case there is not sufficient water in the well to fill all the sample containers. All samples must be collected, preserved, and stored according to the analytical method. Remove the pump from the well and decontaminate the sampling equipment.

If the water level has dropped 0.3 feet or less from the initial water level (water level measure before the pump was installed); proceed to Step 7. If the water level has dropped more than 0.3 feet, calculate the volume of water between the initial water level and the stabilized water level. Add the volume of the water which occupies the pump's tubing to this calculation. This combined volume of water needs to be purged from the well after the water level has stabilized before samples are be collected.

7. Attach the pump's tubing to the "T" connector with a valve (or a three-way stop cock). The pump's tubing from the well casing to the "T" connector must be as short as possible to prevent the groundwater in the tubing from heating up from the sun light or from the ambient air. Attach a short piece of tubing to the other end of the end of the "T" connector to serve as a sampling port for the turbidity samples. Attach the remaining end of the "T" connector to a short piece of tubing and connect the tubing to the flow-through-cell bottom port. To the top port, attach a small piece of tubing to direct the water into a calibrated waste bucket. Fill the cell with the groundwater and remove all gas bubbles from the cell. Position the flow-through-cell in such a way that if gas bubbles enter the cell they can easily exit the cell. If the ports are on the same side of the cell and the cell is cylindrical shape, the cell can be placed at a 45-degree angle with the ports facing upwards; this position should keep any gas bubbles entering the cell away from the monitoring probes and allow the gas bubbles to exit the cell easily (see Low-Flow Setup Diagram). Note,

make sure there are no gas bubbles caught in the probes' protective guard; you may need to shake the cell to remove these bubbles.

8. Turn-on the monitoring probes and turbidity meter.

9. Record the temperature, pH, dissolved oxygen, specific conductance, and oxidation/reduction potential measurements. Open the valve on the "T" connector to collect a sample for the turbidity measurement, close the valve, do the measurement, and record this measurement. Calculate the pump's flow rate from the water exiting the flow-through-cell using a graduated container and a stop watch, and record the measurement. Measure and record the water level. Check flow-through-cell for gas bubbles and sediment; if present, remove them.

10. Repeat Step 9 every 5 minutes or as appropriate until monitoring parameters stabilized. Note at least one flow-through-cell volume must be exchanged between readings. If not, the time interval between readings will need to be increased. Stabilization is achieved when three consecutive measurements are within the following limits:

Turbidity (10% for values greater than 5 NTUs; if three Turbidity values are less than 5 NTUs, consider the values as stabilized),
Dissolved Oxygen (10% for values greater than 0.5 mg/L, if three Dissolved Oxygen values are less than 0.5 mg/L, consider the values as stabilized),
Specific Conductance (3%),
Temperature (3%),
pH (± 0.1 unit),
Oxidation/Reduction Potential (±10 millivolts).

If these stabilization requirements do not stabilize in a reasonable time, the probes may have been coated from the materials in the groundwater, from a buildup of sediment in the flow-through-cell, or a gas bubble is lodged in the probe. The cell and the probes will need to be cleaned. Turn-off the probes (not the pump), disconnect the cell from the "T" connector and continue to purge the well. Disassemble the cell, remove the sediment, and clean the probes according to the manufacturer's instructions. Reassemble the cell and connect the cell to the "T" connector. Remove all gas bubbles from the cell, turn-on the probes, and continue the measurements. Record that the time the cell was cleaned.

11. When it is time to collect the groundwater samples, turn-off the monitoring probes, and disconnect the pump's tubing from the "T" connector. If you are using a centrifugal or peristaltic pump check the pump's tubing to determine if the tubing is completely filled with water (no air space).

All samples must be collected and preserved according to the analytical method. VOCs and dissolved gases samples are normally collected first and directly into pre-preserved sample containers. However, this may not be the case for all sampling locations; the SAP/QAPP should list the order in which the samples are to be collected based on the project's objective(s). Fill all sample containers by allowing the pump discharge to flow gently down the inside of the container with minimal turbulence.

If the pump's tubing is not completely filled with water and the samples are being collected for VOCs and/or dissolved gases analyses using a centrifugal or peristaltic pump, do the following:

> All samples must be collected and preserved according to the analytical method. The VOCs and the dissolved gases (e.g., methane, ethane, ethene, and carbon dioxide) samples are collected last. When it becomes time to collect these samples increase the pump's flow rate until the tubing is completely filled. Collect the samples and record the new flow rate.

12. Store the samples according to the analytical method.

13. Record the total purged volume (graduated waste bucket). Remove the pump from the well and decontaminate the sampling equipment.

Low-Flow Setup Diagram

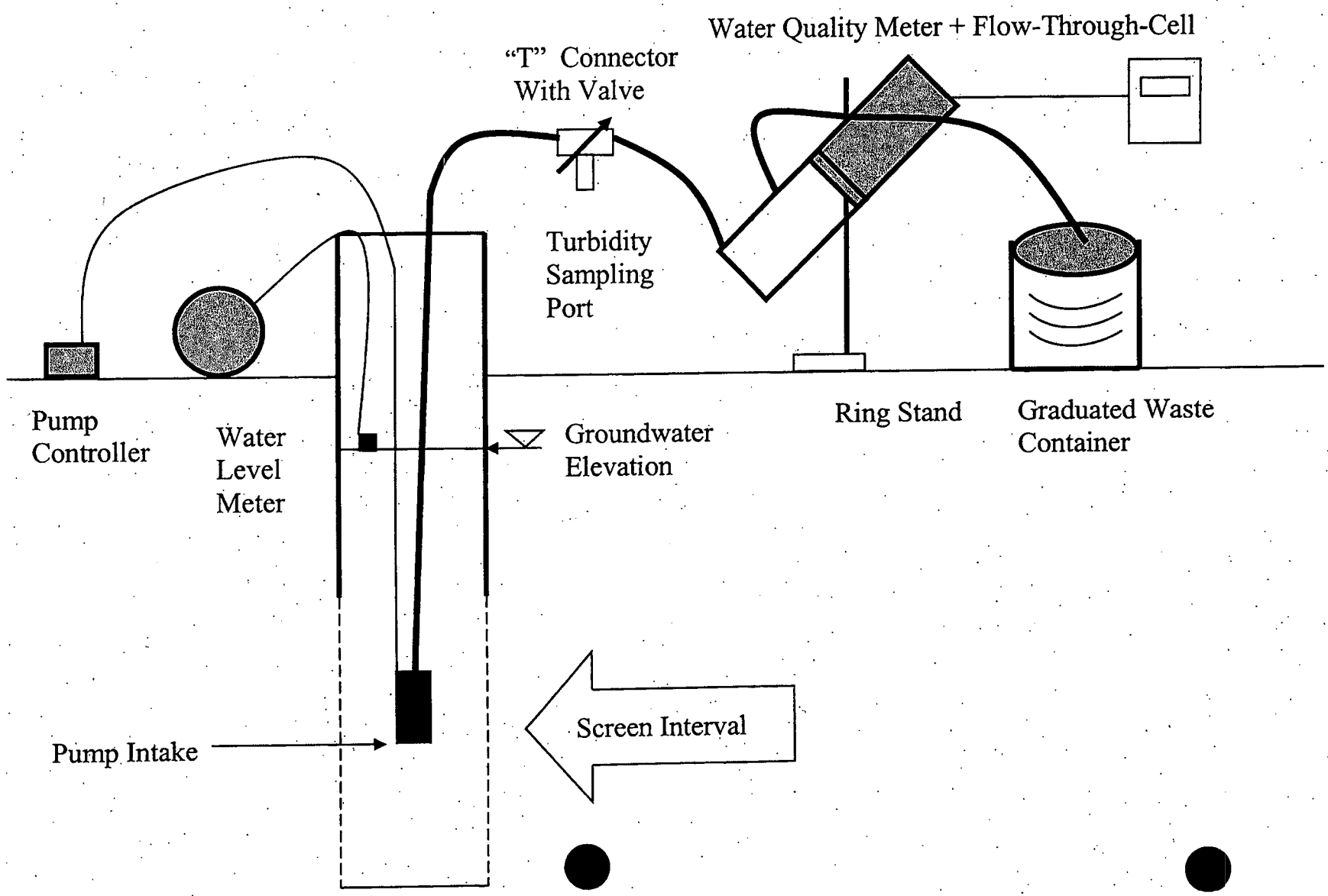

APPENDIX C
EXAMPLE (Minimum Requirements)
WELL PURGING-FIELD WATER QUALITY MEASUREMENTS FORM

Location (Site/Facility Name)_____
Well Number_____ Date_____
Field Personnel_____
Sampling Organization_____
Identify MP_____

Depth to _____/_____ of screen
(below MP) top bottom
Pump Intake at (ft. below MP)_____
Purging Device; (pump type)_____
Total Volume Purged _____

Clock Time 24 HR	Water Depth below MP ft	Pump Dial[1]	Purge Rate ml/min	Cum. Volume Purged liters	Temp. °C	Spec. Cond.[2] µS/cm	pH	ORP[3] mv	DO mg/L	Turb-idity NTU	Comments
Stabilization Criteria					3%	3%	±0.1	± 10 mv	10%	10%	

1. Pump dial setting (for example: hertz, cycles/min, etc).
2. µSiemens per cm(same as µmhos/cm)at 25°C.
3. Oxidation reduction potential (ORP)

SAMPLING EQUIPMENT DECONTAMINATION

SOP#: 2006
DATE: 08/11/94
REV. #: 0.0

1.0 SCOPE AND APPLICATION

The purpose of this Standard Operating Procedure (SOP) is to provide a description of the methods used for preventing, minimizing, or limiting cross-contamination of samples due to inappropriate or inadequate equipment decontamination and to provide general guidelines for developing decontamination procedures for sampling equipment to be used during hazardous waste operations as per 29 Code of Federal Regulations (CFR) 1910.120. This SOP does not address personnel decontamination.

These are standard (i.e. typically applicable) operating procedures which may be varied or changed as required, dependent upon site conditions, equipment limitation, or limitations imposed by the procedure. In all instances, the ultimate procedures employed should be documented and associated with the final report.

Mention of trade names or commercial products does not constitute U.S. Environmental Protection Agency (U.S. EPA) endorsement or recommendation for use.

2.0 METHOD SUMMARY

Removing or neutralizing contaminants from equipment minimizes the likelihood of sample cross contamination, reduces or eliminates transfer of contaminants to clean areas, and prevents the mixing of incompatible substances.

Gross contamination can be removed by physical decontamination procedures. These abrasive and non-abrasive methods include the use of brushes, air and wet blasting, and high and low pressure water cleaning.

The first step, a soap and water wash, removes all visible particulate matter and residual oils and grease. This may be preceded by a steam or high pressure water wash to facilitate residuals removal. The second step involves a tap water rinse and a distilled/deionized water rinse to remove the detergent. An acid rinse provides a low pH media for trace metals removal and is included in the decontamination process if metal samples are to be collected. It is followed by another distilled/deionized water rinse. If sample analysis does not include metals, the acid rinse step can be omitted. Next, a high purity solvent rinse is performed for trace organics removal if organics are a concern at the site. Typical solvents used for removal of organic contaminants include acetone, hexane, or water. Acetone is typically chosen because it is an excellent solvent, miscible in water, and not a target analyte on the Priority Pollutant List. If acetone is known to be a contaminant of concern at a given site or if Target Compound List analysis (which includes acetone) is to be performed, another solvent may be substituted. The solvent must be allowed to evaporate completely and then a final distilled/deionized water rinse is performed. This rinse removes any residual traces of the solvent.

The decontamination procedure described above may be summarized as follows:

1. Physical removal
2. Non-phosphate detergent wash
3. Tap water rinse
4. Distilled/deionized water rinse
5. 10% nitric acid rinse
6. Distilled/deionized water rinse
7. Solvent rinse (pesticide grade)
8. Air dry
9. Distilled/deionized water rinse

If a particular contaminant fraction is not present at the site, the nine (9) step decontamination procedure specified above may be modified for site specificity. For example, the nitric acid rinse may be eliminated if metals are not of concern at a site. Similarly, the solvent rinse may be eliminated if organics are not of

concern at a site. Modifications to the standard procedure should be documented in the site specific work plan or subsequent report.

3.0 SAMPLE PRESERVATION, CONTAINERS, HANDLING, AND STORAGE

The amount of sample to be collected and the proper sample container type (i.e., glass, plastic), chemical preservation, and storage requirements are dependent on the matrix being sampled and the parameter(s) of interest.

More specifically, sample collection and analysis of decontamination waste may be required before beginning proper disposal of decontamination liquids and solids generated at a site. This should be determined prior to initiation of site activities.

4.0 INTERFERENCES AND POTENTIAL PROBLEMS

- The use of distilled/deionized water commonly available from commercial vendors may be acceptable for decontamination of sampling equipment provided that it has been verified by laboratory analysis to be analyte free (specifically for the contaminants of concern).
- The use of an untreated potable water supply is not an acceptable substitute for tap water. Tap water may be used from any municipal or industrial water treatment system.
- If acids or solvents are utilized in decontamination they raise health and safety, and waste disposal concerns.
- Damage can be incurred by acid and solvent washing of complex and sophisticated sampling equipment.

5.0 EQUIPMENT/APPARATUS

Decontamination equipment, materials, and supplies are generally selected based on availability. Other considerations include the ease of decontaminating or disposing of the equipment. Most equipment and supplies can be easily procured. For example, soft-bristle scrub brushes or long-handled bottle brushes can be used to remove contaminants. Large galvanized wash tubs, stock tanks, or buckets can hold wash and rinse solutions. Children's wading pools can also be used. Large plastic garbage cans or other similar containers lined with plastic bags can help segregate contaminated equipment. Contaminated liquid can be stored temporarily in metal or plastic cans or drums.

The following standard materials and equipment are recommended for decontamination activities:

5.1 Decontamination Solutions

- Non-phosphate detergent
- Selected solvents (acetone, hexane, nitric acid, etc.)
- Tap water
- Distilled or deionized water

5.2 Decontamination Tools/Supplies

- Long and short handled brushes
- Bottle brushes
- Drop cloth/plastic sheeting
- Paper towels
- Plastic or galvanized tubs or buckets
- Pressurized sprayers (H_2O)
- Solvent sprayers
- Aluminum foil

5.3 Health and Safety Equipment

Appropriate personal protective equipment (i.e., safety glasses or splash shield, appropriate gloves, aprons or coveralls, respirator, emergency eye wash)

5.4 Waste Disposal

- Trash bags
- Trash containers
- 55-gallon drums
- Metal/plastic buckets/containers for storage and disposal of decontamination solutions

6.0 REAGENTS

There are no reagents used in this procedure aside from the actual decontamination solutions. Table 1 (Appendix A) lists solvent rinses which may be required for elimination of particular chemicals. In

general, the following solvents are typically utilized for decontamination purposes:

- C 10% nitric acid is typically used for inorganic compounds such as metals. An acid rinse may not be required if inorganics are not a contaminant of concern.
- C Acetone (pesticide grade)[1]
- C Hexane (pesticide grade)[1]
- C Methanol[1]

[1] - Only if sample is to be analyzed for organics.

7.0 PROCEDURES

As part of the health and safety plan, a decontamination plan should be developed and reviewed. The decontamination line should be set up before any personnel or equipment enter the areas of potential exposure. The equipment decontamination plan should include:

- C The number, location, and layout of decontamination stations.
- C Decontamination equipment needed.
- C Appropriate decontamination methods.
- C Methods for disposal of contaminated clothing, equipment, and solutions.
- C Procedures can be established to minimize the potential for contamination. This may include: (1) work practices that minimize contact with potential contaminants; (2) using remote sampling techniques; (3) covering monitoring and sampling equipment with plastic, aluminum foil, or other protective material; (4) watering down dusty areas; (5) avoiding laying down equipment in areas of obvious contamination; and (6) use of disposable sampling equipment.

7.1 Decontamination Methods

All samples and equipment leaving the contaminated area of a site must be decontaminated to remove any contamination that may have adhered to equipment. Various decontamination methods will remove contaminants by: (1) flushing or other physical action, or (2) chemical complexing to inactivate contaminants by neutralization, chemical reaction, disinfection, or sterilization.

Physical decontamination techniques can be grouped into two categories: abrasive methods and non-abrasive methods, as follows:

7.1.1 Abrasive Cleaning Methods

Abrasive cleaning methods work by rubbing and wearing away the top layer of the surface containing the contaminant. The mechanical abrasive cleaning methods are most commonly used at hazardous waste sites. The following abrasive methods are available:

Mechanical

Mechanical methods of decontamination include using metal or nylon brushes. The amount and type of contaminants removed will vary with the hardness of bristles, length of time brushed, degree of brush contact, degree of contamination, nature of the surface being cleaned, and degree of contaminant adherence to the surface.

Air Blasting

Air blasting equipment uses compressed air to force abrasive material through a nozzle at high velocities. The distance between nozzle and surface cleaned, air pressure, time of application, and angle at which the abrasive strikes the surface will dictate cleaning efficiency. Disadvantages of this method are the inability to control the amount of material removed and the large amount of waste generated.

Wet Blasting

Wet blast cleaning involves use of a suspended fine abrasive. The abrasive/water mixture is delivered by compressed air to the contaminated area. By using a very fine abrasive, the amount of materials removed can be carefully controlled.

7.1.2 Non-Abrasive Cleaning Methods

Non-abrasive cleaning methods work by forcing the contaminant off a surface with pressure. In general, the equipment surface is not removed using non-abrasive methods.

Low-Pressure Water

This method consists of a container which is filled with water. The user pumps air out of the container to create a vacuum. A slender nozzle and hose allow the user to spray in hard-to-reach places.

High-Pressure Water

This method consists of a high-pressure pump, an operator controlled directional nozzle, and a high-pressure hose. Operating pressure usually ranges from 340 to 680 atmospheres (atm) and flow rates usually range from 20 to 140 liters per minute.

Ultra-High-Pressure Water

This system produces a water jet that is pressured from 1,000 to 4,000 atmospheres. This ultra-high-pressure spray can remove tightly-adhered surface films. The water velocity ranges from 500 meters/second (m/s) (1,000 atm) to 900 m/s (4,000 atm). Additives can be used to enhance the cleaning action.

Rinsing

Contaminants are removed by rinsing through dilution, physical attraction, and solubilization.

Damp Cloth Removal

In some instances, due to sensitive, non-waterproof equipment or due to the unlikelihood of equipment being contaminated, it is not necessary to conduct an extensive decontamination procedure. For example, air sampling pumps hooked on a fence, placed on a drum, or wrapped in plastic bags are not likely to become heavily contaminated. A damp cloth should be used to wipe off contaminants which may have adhered to equipment through airborne contaminants or from surfaces upon which the equipment was set.

Disinfection/Sterilization

Disinfectants are a practical means of inactivating infectious agents. Unfortunately, standard sterilization methods are impractical for large equipment. This method of decontamination is typically performed off-site.

7.2 Field Sampling Equipment Decontamination Procedures

The decontamination line is setup so that the first station is used to clean the most contaminated item. It progresses to the last station where the least contaminated item is cleaned. The spread of contaminants is further reduced by separating each decontamination station by a minimum of three (3) feet. Ideally, the contamination should decrease as the equipment progresses from one station to another farther along in the line.

A site is typically divided up into the following boundaries: Hot Zone or Exclusion Zone (EZ), the Contamination Reduction Zone (CRZ), and the Support or Safe Zone (SZ). The decontamination line should be setup in the Contamination Reduction Corridor (CRC) which is in the CRZ. Figure 1 (Appendix B) shows a typical contaminant reduction zone layout. The CRC controls access into and out of the exclusion zone and confines decontamination activities to a limited area. The CRC boundaries should be conspicuously marked. The far end is the hotline, the boundary between the exclusion zone and the contamination reduction zone. The size of the decontamination corridor depends on the number of stations in the decontamination process, overall dimensions of the work zones, and amount of space available at the site. Whenever possible, it should be a straight line.

Anyone in the CRC should be wearing the level of protection designated for the decontamination crew. Another corridor may be required for the entry and exit of heavy equipment. Sampling and monitoring equipment and sampling supplies are all maintained outside of the CRC. Personnel don their equipment away from the CRC and enter the exclusion zone through a separate access control point at the hotline. One person (or more) dedicated to decontaminating equipment is recommended.

7.2.1 Decontamination Setup

Starting with the most contaminated station, the decontamination setup should be as follows:

Station 1: Segregate Equipment Drop

Place plastic sheeting on the ground (Figure 2, Appendix B). Size will depend on amount of

equipment to be decontaminated. Provide containers lined with plastic if equipment is to be segregated. Segregation may be required if sensitive equipment or mildly contaminated equipment is used at the same time as equipment which is likely to be heavily contaminated.

Station 2: Physical Removal With A High-Pressure Washer (Optional)

As indicated in 7.1.2, a high-pressure wash may be required for compounds which are difficult to remove by washing with brushes. The elevated temperature of the water from the high-pressure washers is excellent at removing greasy/oily compounds. High pressure washers require water and electricity.

A decontamination pad may be required for the high-pressure wash area. An example of a wash pad may consist of an approximately 1 1/2 foot-deep basin lined with plastic sheeting and sloped to a sump at one corner. A layer of sand can be placed over the plastic and the basin is filled with gravel or shell. The sump is also lined with visqueen and a barrel is placed in the hole to prevent collapse. A sump pump is used to remove the water from the sump for transfer into a drum.

Typically heavy machinery is decontaminated at the end of the day unless site sampling requires that the machinery be decontaminated frequently. A separate decontamination pad may be required for heavy equipment.

Station 3: Physical Removal With Brushes And A Wash Basin

Prior to setting up Station 3, place plastic sheeting on the ground to cover areas under Station 3 through Station 10.
Fill a wash basin, a large bucket, or child's swimming pool with non-phosphate detergent and tap water. Several bottle and bristle brushes to physically remove contamination should be dedicated to this station . Approximately 10 - 50 gallons of water may be required initially depending upon the amount of equipment to decontaminate and the amount of gross contamination.

Station 4: Water Basin

Fill a wash basin, a large bucket, or child's swimming pool with tap water. Several bottle and bristle brushes should be dedicated to this station. Approximately 10-50 gallons of water may be required initially depending upon the amount of equipment to decontaminate and the amount of gross contamination.

Station 5: Low-Pressure Sprayers

Fill a low-pressure sprayer with distilled/deionized water. Provide a 5-gallon bucket or basin to contain the water during the rinsing process. Approximately 10-20 gallons of water may be required initially depending upon the amount of equipment to decontaminate and the amount of gross contamination.

Station 6: Nitric Acid Sprayers

Fill a spray bottle with 10% nitric acid. An acid rinse may not be required if inorganics are not a contaminant of concern. The amount of acid will depend on the amount of equipment to be decontaminated. Provide a 5-gallon bucket or basin to collect acid during the rinsing process.

Station 7: Low-Pressure Sprayers

Fill a low-pressure sprayer with distilled/deionized water. Provide a 5-gallon bucket or basin to collect water during the rinsate process.

Station 8: Organic Solvent Sprayers

Fill a spray bottle with an organic solvent. After each solvent rinse, the equipment should be rinsed with distilled/deionized water and air dried. Amount of solvent will depend on the amount of equipment to decontaminate. Provide a 5-gallon bucket or basin to collect the solvent during the rinsing process.

Solvent rinses may not be required unless organics are a contaminant of concern, and may be eliminated from the station sequence.

Station 9: Low-Pressure Sprayers

Fill a low-pressure sprayer with distilled/deionized water. Provide a 5-gallon bucket or basin to collect water during the rinsate process.

Station 10: Clean Equipment Drop

Lay a clean piece of plastic sheeting over the bottom

plastic layer. This will allow easy removal of the plastic in the event that it becomes dirty. Provide aluminum foil, plastic, or other protective material to wrap clean equipment.

7.2.2 Decontamination Procedures

Station 1: Segregate Equipment Drop

Deposit equipment used on-site (i.e., tools, sampling devices and containers, monitoring instruments radios, clipboards, etc.) on the plastic drop cloth/sheet or in different containers with plastic liners. Each will be contaminated to a different degree. Segregation at the drop reduces the probability of cross contamination. Loose leaf sampling data sheets or maps can be placed in plastic zip lock bags if contamination is evident.

Station 2: Physical Removal With A High-Pressure Washer (Optional)

Use high pressure wash on grossly contaminated equipment. Do not use high- pressure wash on sensitive or non-waterproof equipment.

Station 3: Physical Removal With Brushes And A Wash Basin

Scrub equipment with soap and water using bottle and bristle brushes. Only sensitive equipment (i.e., radios, air monitoring and sampling equipment) which is waterproof should be washed. Equipment which is not waterproof should have plastic bags removed and wiped down with a damp cloth. Acids and organic rinses may also ruin sensitive equipment. Consult the manufacturers for recommended decontamination solutions.

Station 4: Equipment Rinse

Wash soap off of equipment with water by immersing the equipment in the water while brushing. Repeat as many times as necessary.

Station 5: Low-Pressure Rinse

Rinse sampling equipment with distilled/deionized water with a low-pressure sprayer.

Station 6: Nitric Acid Sprayers (required only if metals are a contaminant of concern)

Using a spray bottle rinse sampling equipment with nitric acid. Begin spraying (inside and outside) at one end of the equipment allowing the acid to drip to the other end into a 5-gallon bucket. A rinsate blank may be required at this station. Refer to Section 9.

Station 7: Low-Pressure Sprayers

Rinse sampling equipment with distilled/deionized water with a low-pressure sprayer.

Station 8: Organic Solvent Sprayers

Rinse sampling equipment with a solvent. Begin spraying (inside and outside) at one end of the equipment allowing the solvent to drip to the other end into a 5-gallon bucket. Allow the solvent to evaporate from the equipment before going to the next station. A QC rinsate sample may be required at this station.

Station 9: Low-Pressure Sprayers

Rinse sampling equipment with distilled/deionized water with a low-pressure washer.

Station 10 : Clean Equipment Drop

Lay clean equipment on plastic sheeting. Once air dried, wrap sampling equipment with aluminum foil, plastic, or other protective material.

7.2.3 Post Decontamination Procedures

1. Collect high-pressure pad and heavy equipment decontamination area liquid and waste and store in appropriate drum or container. A sump pump can aid in the collection process. Refer to the Department of Transportation (DOT) requirements for appropriate containers based on the contaminant of concern.

2. Collect high-pressure pad and heavy equipment decontamination area solid waste and store in appropriate drum or container. Refer to the DOT requirements for appropriate containers based on the contaminant of concern.

3. Empty soap and water liquid wastes from basins and buckets and store in appropriate

drum or container. Refer to the DOT requirements for appropriate containers based on the contaminant of concern.

4. Empty acid rinse waste and place in appropriate container or neutralize with a base and place in appropriate drum. pH paper or an equivalent pH test is required for neutralization. Consult DOT requirements for appropriate drum for acid rinse waste.

5. Empty solvent rinse sprayer and solvent waste into an appropriate container. Consult DOT requirements for appropriate drum for solvent rinse waste.

6. Using low-pressure sprayers, rinse basins, and brushes. Place liquid generated from this process into the wash water rinse container.

7. Empty low-pressure sprayer water onto the ground.

8. Place all solid waste materials generated from the decontamination area (i.e., gloves and plastic sheeting, etc.) in an approved DOT drum. Refer to the DOT requirements for appropriate containers based on the contaminant of concern.

9. Write appropriate labels for waste and make arrangements for disposal. Consult DOT regulations for the appropriate label for each drum generated from the decontamination process.

8.0 CALCULATIONS

This section is not applicable to this SOP.

9.0 QUALITYASSURANCE/ QUALITY CONTROL

A rinsate blank is one specific type of quality control sample associated with the field decontamination process. This sample will provide information on the effectiveness of the decontamination process employed in the field.

Rinsate blanks are samples obtained by running analyte free water over decontaminated sampling equipment to test for residual contamination. The blank water is collected in sample containers for handling, shipment, and analysis. These samples are treated identical to samples collected that day. A rinsate blank is used to assess cross contamination brought about by improper decontamination procedures. Where dedicated sampling equipment is not utilized, collect one rinsate blank per day per type of sampling device samples to meet QA2 and QA3 objectives.

If sampling equipment requires the use of plastic tubing it should be disposed of as contaminated and replaced with clean tubing before additional sampling occurs.

10.0 DATA VALIDATION

Results of quality control samples will be evaluated for contamination. This information will be utilized to qualify the environmental sample results in accordance with the project's data quality objectives.

11.0 HEALTH AND SAFETY

When working with potentially hazardous materials, follow OSHA, U.S. EPA, corporate, and other applicable health and safety procedures.

Decontamination can pose hazards under certain circumstances. Hazardous substances may be incompatible with decontamination materials. For example, the decontamination solution may react with contaminants to produce heat, explosion, or toxic products. Also, vapors from decontamination solutions may pose a direct health hazard to workers by inhalation, contact, fire, or explosion.

The decontamination solutions must be determined to be acceptable before use. Decontamination materials may degrade protective clothing or equipment; some solvents can permeate protective clothing. If decontamination materials do pose a health hazard, measures should be taken to protect personnel or substitutions should be made to eliminate the hazard. The choice of respiratory protection based on contaminants of concern from the site may not be appropriate for solvents used in the decontamination process.

Safety considerations should be addressed when using abrasive and non-abrasive decontamination

equipment. Maximum air pressure produced by abrasive equipment could cause physical injury. Displaced material requires control mechanisms.

Material generated from decontamination activities requires proper handling, storage, and disposal. Personal Protective Equipment may be required for these activities.

Material safety data sheets are required for all decontamination solvents or solutions as required by the Hazard Communication Standard (i.e., acetone, alcohol, and trisodiumphosphate).

In some jurisdictions, phosphate containing detergents (i.e., TSP) are banned.

12.0 REFERENCES

Field Sampling Procedures Manual, New Jersey Department of Environmental Protection, February, 1988.

A Compendium of Superfund Field Operations Methods, EPA 540/p-87/001.

Engineering Support Branch Standard Operating Procedures and Quality Assurance Manual, USEPA Region IV, April 1, 1986.

Guidelines for the Selection of Chemical Protective Clothing, Volume 1, Third Edition, American Conference of Governmental Industrial Hygienists, Inc., February, 1987.

Occupational Safety and Health Guidance Manual for Hazardous Waste Site Activities, NIOSH/OSHA/USCG/EPA, October, 1985.

APPENDIX A

Table

Table 1. Soluble Contaminants and Recommended Solvent Rinse

TABLE 1 Soluble Contaminants and Recommended Solvent Rinse		
SOLVENT[1]	EXAMPLES OF SOLVENTS	SOLUBLE CONTAMINANTS
Water	Deionized water Tap water	Low-chain hydrocarbons Inorganic compounds Salts Some organic acids and other polar compounds
Dilute Acids	Nitric acid Acetic acid Boric acid	Basic (caustic) compounds (e.g., amines and hydrazines)
Dilute Bases	Sodium bicarbonate (e.g., soap detergent)	Acidic compounds Phenol Thiols Some nitro and sulfonic compounds
Organic Solvents [2]	Alcohols Ethers Ketones Aromatics Straight chain alkalines (e.g., hexane) Common petroleum products (e.g., fuel, oil, kerosene)	Nonpolar compounds (e.g., some organic compounds)
Organic Solvent[2]	Hexane	PCBs

[1] - Material safety data sheets are required for all decontamination solvents or solutions as required by the Hazard Communication Standard

[2] - WARNING: Some organic solvents can permeate and/or degrade the protective clothing

APPENDIX B

Figures

Figure 1. Contamination Reduction Zone Layout

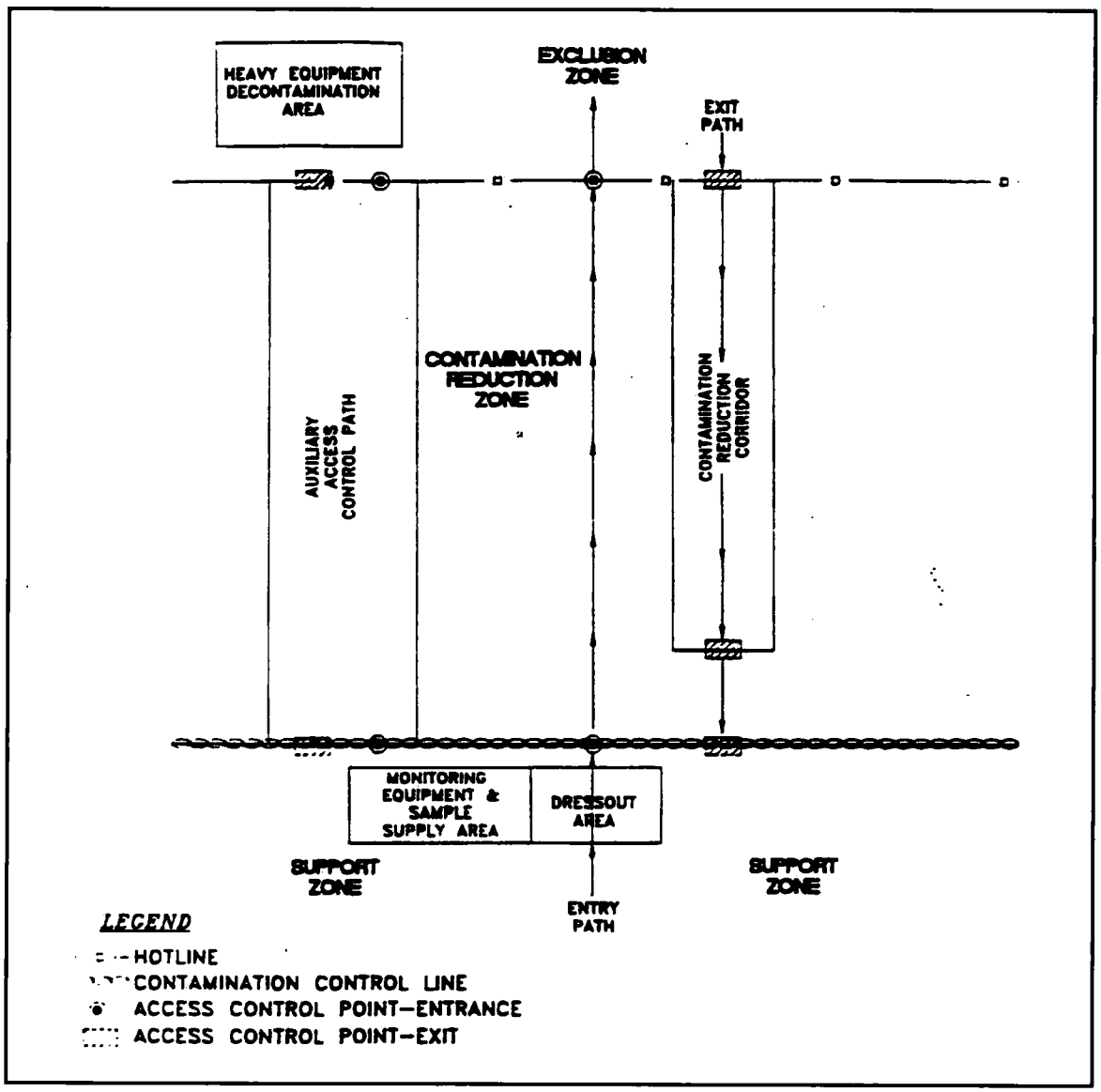

APPENDIX B (Cont'd.)

Figures

Figure 2. Decontamination Layout

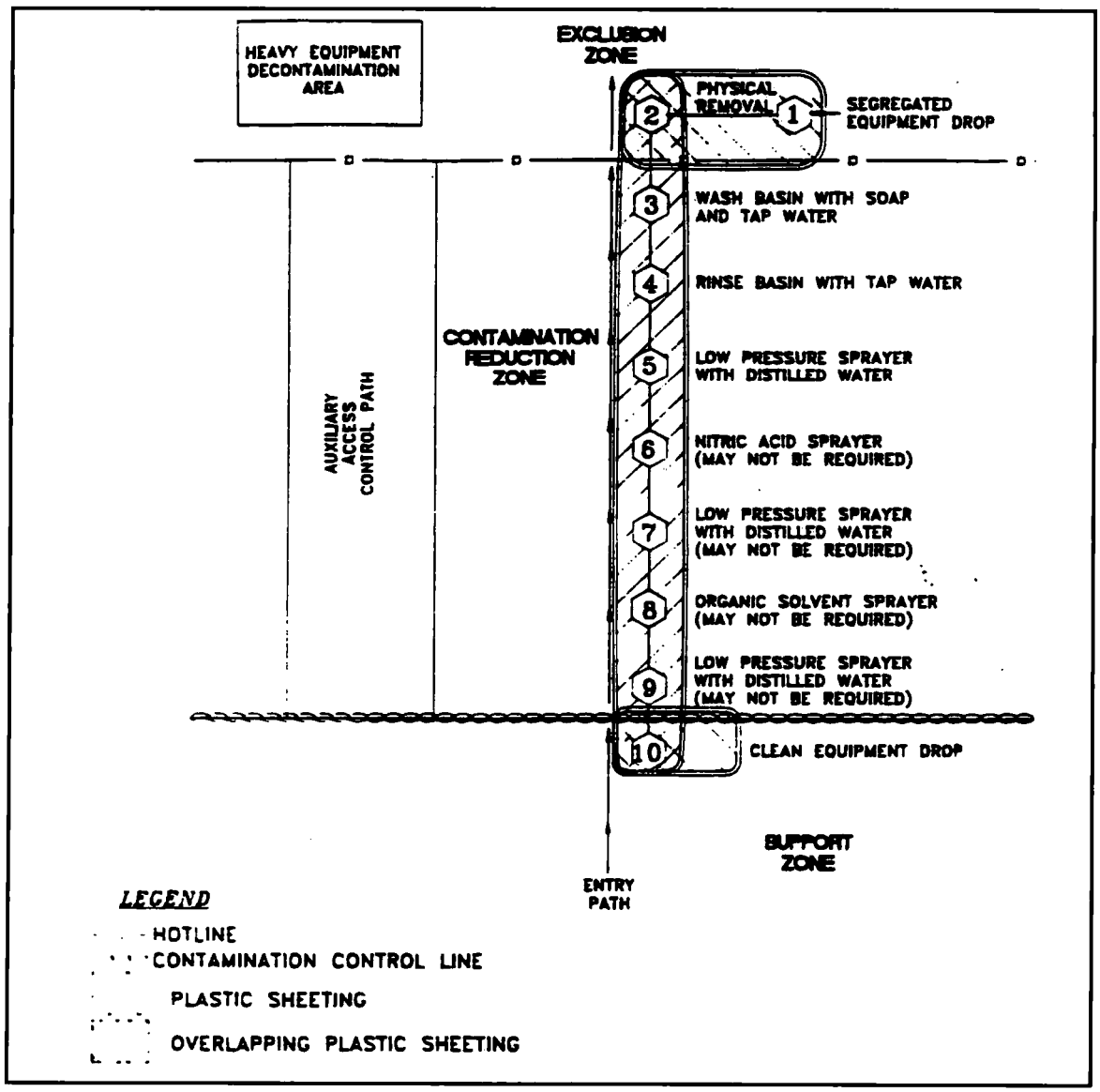

U. S. EPA ENVIRONMENTAL RESPONSE TEAM

STANDARD OPERATING PROCEDURES

SOIL SAMPLING

CONTENTS

1.0 SCOPE AND APPLICATION

2.0 METHOD SUMMARY

3.0 SAMPLE PRESERVATION, CONTAINERS, HANDLING, AND STORAGE

4.0 POTENTIAL PROBLEMS

5.0 EQUIPMENT

6.0 REAGENTS

7.0 PROCEDURES

- 7.1 Preparation
- 7.2 Sample Collection
  - 7.2.1 Surface Soil Samples
  - 7.2.2 Sampling at Depth with Augers and Thin Wall Tube Samplers
  - 7.2.3 Sampling at Depth with a Trier
  - 7.2.4 Sampling at Depth with a Split Spoon (Barrel) Sampler
  - 7.2.5 Test Pit/Trench Excavation

8.0 CALCULATIONS

9.0 QUALITY ASSURANCE/QUALITY CONTROL

10.0 DATA VALIDATION

11.0 HEALTH AND SAFETY

12.0 REFERENCES

13.0 APPENDIX
Figures

SUPERCEDES: SOP #2012; Revision 0.0; 11/16/94; U.S. EPA Contract 68-C4-0022.

1.0 SCOPE AND APPLICATION

The purpose of this standard operating procedure (SOP) is to describe the procedures for the collection of representative soil samples. Sampling depths are assumed to be those that can be reached without the use of a drill rig, direct-push, or other mechanized equipment (except for a back-hoe). Analysis of soil samples may determine whether concentrations of specific pollutants exceed established action levels, or if the concentrations of pollutants present a risk to public health, welfare, or the environment.

These are standard (i.e., typically applicable) operating procedures which may be varied or changed as required, dependent upon site conditions, equipment limitations or limitations imposed by the procedure. In all instances, the actual procedures used should be documented and described in an appropriate site report.

Mention of trade names or commercial products does not constitute U.S. Environmental Protection Agency (EPA) endorsement or recommendation for use.

2.0 METHOD SUMMARY

Soil samples may be collected using a variety of methods and equipment depending on the depth of the desired sample, the type of sample required (disturbed vs. undisturbed), and the soil type. Near-surface soils may be easily sampled using a spade, trowel, and scoop. Sampling at greater depths may be performed using a hand auger, continuous flight auger, a trier, a split-spoon, or, if required, a backhoe.

3.0 SAMPLE PRESERVATION, CONTAINERS, HANDLING, AND STORAGE

Chemical preservation of solids is not generally recommended. Samples should, however, be cooled and protected from sunlight to minimize any potential reaction. The amount of sample to be collected and proper sample container type are discussed in ERT/REAC SOP #2003 Rev. 0.0 08/11/94, *Sample Storage, Preservation and Handling.*

4.0 INTERFERENCES AND POTENTIAL PROBLEMS

There are two primary potential problems associated with soil sampling - cross contamination of samples and improper sample collection. Cross contamination problems can be eliminated or minimized through the use of dedicated sampling equipment. If this is not possible or practical, then decontamination of sampling equipment is necessary. Improper sample collection can involve using contaminated equipment, disturbance of the matrix resulting in compaction of the sample, or inadequate homogenization of the samples where required, resulting in variable, non-representative results.

5.0 EQUIPMENT

Soil sampling equipment includes the following:

- Maps/plot plan
- Safety equipment, as specified in the site-specific Health and Safety Plan
- Survey equipment or global positioning system (GPS) to locate sampling points
- Tape measure
- Survey stakes or flags
- Camera and film
- Stainless steel, plastic, or other appropriate homogenization bucket, bowl or pan
- Appropriate size sample containers
- Ziplock plastic bags
- Logbook
- Labels
- Chain of Custody records and custody seals
- Field data sheets and sample labels
- Cooler(s)
- Ice
- Vermiculite
- Decontamination supplies/equipment
- Canvas or plastic sheet
- Spade or shovel
- Spatula
- Scoop
- Plastic or stainless steel spoons
- Trowel(s)
- Continuous flight (screw) auger
- Bucket auger
- Post hole auger
- Extension rods
- T-handle
- Sampling trier
- Thin wall tube sampler
- Split spoons
- Vehimeyer soil sampler outfit
  - Tubes
  - Points
  - Drive head
  - Drop hammer
  - Puller jack and grip
- Backhoe

6.0 REAGENTS

Reagents are not used for the preservation of soil samples. Decontamination solutions are specified in ERT/REAC SOP #2006 Rev. 0.0 08/11/94, *Sampling Equipment Decontamination*, and the site specific work plan.

7.0 PROCEDURES

7.1 Preparation

1. Determine the extent of the sampling effort, the sampling methods to be employed, and the types and amounts of equipment and supplies required.

2. Obtain necessary sampling and monitoring equipment.

3. Decontaminate or pre-clean equipment, and ensure that it is in working order.

4. Prepare schedules and coordinate with staff, client, and regulatory agencies, if appropriate.

5. Perform a general site survey prior to site entry in accordance with the site specific Health and Safety Plan.

6. Use stakes, flagging, or buoys to identify and mark all sampling locations. Specific site factors, including extent and nature of contaminant, should be considered when selecting sample location. If required, the proposed locations may be adjusted based on site access, property boundaries, and surface obstructions. All staked locations should be utility-cleared by the property owner or the On-Scene-Coordinator (OSC) prior to soil sampling; and utility clearance should always be confirmed before beginning work.

7.2 Sample Collection

7.2.1 Surface Soil Samples

Collection of samples from near-surface soil can be accomplished with tools such as spades, shovels, trowels, and scoops. Surface material is removed to the required depth and a stainless steel or plastic scoop is then used to collect the sample.

This method can be used in most soil types but is limited to sampling at or near the ground surface. Accurate, representative samples can be collected with this procedure depending on the care and precision demonstrated by the sample team member. A flat, pointed mason trowel to cut a block of the desired soil is helpful when undisturbed profiles are required. Tools plated with chrome or other materials should not be used. Plating is particularly common with garden implements such as potting trowels.

The following procedure is used to collect surface soil samples:

1. Carefully remove the top layer of soil or debris to the desired sample depth with a pre-cleaned spade.

2. Using a pre-cleaned, stainless steel scoop, plastic spoon, or trowel, remove and discard a thin layer of soil from the area which came in contact with the spade.

3. If volatile organic analysis is to be performed, transfer the sample directly into an appropriate, labeled sample container with a stainless steel lab spoon, or equivalent and secure the cap tightly. Place the remainder of the sample into a stainless steel, plastic, or other appropriate homogenization container, and mix thoroughly to obtain a homogenous sample representative of the entire sampling interval. Then, either place the sample into appropriate, labeled containers and secure the caps tightly; or, if composite samples are to be collected, place a sample from another sampling interval or location into the homogenization container and mix thoroughly. When compositing is complete, place the sample into appropriate, labeled containers and secure the caps tightly.

7.2.2 Sampling at Depth with Augers and Thin Wall Tube Samplers

This system consists of an auger, or a thin-wall tube sampler, a series of extensions, and a "T" handle (Figure 1, Appendix A). The auger is used to bore a hole to a desired sampling depth, and is then withdrawn. The sample may be collected directly from the auger. If a core sample is to be collected, the auger tip is then replaced with a thin wall tube sampler. The system is then lowered down the borehole, and driven into the soil to the completion depth. The system is withdrawn and the core is collected from the thin wall tube sampler.

Several types of augers are available; these include: bucket type, continuous flight (screw), and post-hole augers. Bucket type augers are better for direct sample recovery because they provide a large volume of sample in a short time. When continuous flight augers are used, the sample can be collected directly from the flights. The continuous flight augers are satisfactory when a composite of the complete soil column is desired. Post-hole augers have limited utility for sample collection as they are designed to cut through fibrous, rooted, swampy soil and cannot be used below a depth of approximately three feet.

The following procedure is used for collecting soil samples with the auger:

1. Attach the auger bit to a drill rod extension, and attach the "T" handle to the drill rod.

2. Clear the area to be sampled of any surface debris (e.g., twigs, rocks, litter). It may be advisable to remove the first three to six inches of surface soil for an area approximately six inches in radius around the drilling location.

3. Begin augering, periodically removing and depositing accumulated soils onto a plastic sheet spread near the hole. This prevents accidental brushing of loose material back down the borehole when removing the auger or adding drill rods. It also facilitates refilling the hole, and avoids possible contamination of the surrounding area.

4. After reaching the desired depth, slowly and carefully remove the auger from the hole. When sampling directly from the auger, collect the sample after the auger is removed from the hole and proceed to Step 10.

5. Remove auger tip from the extension rods and replace with a pre-cleaned thin wall tube sampler. Install the proper cutting tip.

6. Carefully lower the tube sampler down the borehole. Gradually force the tube sampler into the soil. Do not scrape the borehole sides. Avoid hammering the rods as the vibrations may cause the boring walls to collapse.

7. Remove the tube sampler, and unscrew the drill rods.

8. Remove the cutting tip and the core from the device.

9. Discard the top of the core (approximately 1 inch), as this possibly represents material collected before penetration of the layer of concern. Place the remaining core into the appropriate labeled sample container. Sample homogenization is not required.

10. If volatile organic analysis is to be performed, transfer the sample into an appropriate, labeled sample container with a stainless steel lab spoon, or equivalent and secure the cap tightly. Place the remainder of the sample into a stainless steel, plastic, or other appropriate homogenization container, and mix thoroughly to obtain a homogenous sample representative of the entire sampling interval. Then, either place the sample into appropriate, labeled containers and secure the caps tightly; or, if composite samples are to be collected, place a sample from another sampling interval into the homogenization container and mix thoroughly.

    When compositing is complete, place the sample into appropriate, labeled containers and secure the caps tightly.

11. If another sample is to be collected in the same hole, but at a greater depth, reattach the auger bit to the drill and assembly, and follow steps 3 through 11, making sure to decontaminate the auger and tube sampler between samples.

12. Abandon the hole according to applicable state regulations. Generally, shallow holes can simply be backfilled with the removed soil material.

7.2.3 Sampling with a Trier

The system consists of a trier, and a "T" handle. The auger is driven into the soil to be sampled and used to extract a core sample from the appropriate depth.

The following procedure is used to collect soil samples with a sampling trier:

1. Insert the trier (Figure 2, Appendix A) into the material to be sampled at a 0° to 45° angle from horizontal. This orientation minimizes the spillage of sample.

2. Rotate the trier once or twice to cut a core of material.

3. Slowly withdraw the trier, making sure that the slot is facing upward.

4. If volatile organic analyses are required, transfer the sample into an appropriate, labeled sample container with a stainless steel lab spoon, or equivalent and secure the cap tightly. Place the remainder of the sample into a stainless steel, plastic, or other appropriate homogenization container, and mix thoroughly to obtain a homogenous sample representative of the entire sampling interval. Then, either place the sample into appropriate, labeled containers and secure the caps tightly; or, if composite samples are to be collected, place a sample from another sampling interval into the homogenization container and mix thoroughly. When compositing is complete, place the sample into appropriate, labeled containers and secure the caps tightly.

7.2.4 Sampling at Depth with a Split Spoon (Barrel) Sampler

Split spoon sampling is generally used to collect undisturbed soil cores of 18 or 24 inches in length. A series of consecutive cores may be extracted with a split spoon sampler to give a complete soil column profile, or an auger may be used to drill down to the desired depth for sampling. The split spoon is then driven to its sampling depth through the bottom of the augured hole and the core extracted.

When split spoon sampling is performed to gain geologic information, all work should

be performed in accordance with ASTM D1586-98, "Standard Test Method for Penetration Test and Split-Barrel Sampling of Soils".

The following procedures are used for collecting soil samples with a split spoon:

1. Assemble the sampler by aligning both sides of barrel and then screwing the drive shoe on the bottom and the head piece on top.

2. Place the sampler in a perpendicular position on the sample material.

3. Using a well ring, drive the tube. Do not drive past the bottom of the head piece or compression of the sample will result.

4. Record in the site logbook or on field data sheets the length of the tube used to penetrate the material being sampled, and the number of blows required to obtain this depth.

5. Withdraw the sampler, and open by unscrewing the bit and head and splitting the barrel. The amount of recovery and soil type should be recorded on the boring log. If a split sample is desired, a cleaned, stainless steel knife should be used to divide the tube contents in half, longitudinally. This sampler is typically available in 2 and 3 1/2 inch diameters. A larger barrel may be necessary to obtain the required sample volume.

6. Without disturbing the core, transfer it to appropriate labeled sample container(s) and seal tightly.

7.2.5 Test Pit/Trench Excavation

A backhoe can be used to remove sections of soil, when detailed examination of soil characteristics are required. This is probably the most expensive sampling method because of the relatively high cost of backhoe operation.

The following procedures are used for collecting soil samples from test pits or trenches:

1. Prior to any excavation with a backhoe, it is important to ensure that all sampling locations are clear of overhead and buried utilities.

2. Review the site specific Health & Safety plan and ensure that all safety precautions including appropriate monitoring equipment are installed as required.

3. Using the backhoe, excavate a trench approximately three feet wide and approximately one foot deep below the cleared sampling location. Place excavated soils on plastic sheets. Trenches greater than five feet deep must be sloped or protected by a shoring system, as required by OSHA regulations.

4. A shovel is used to remove a one to two inch layer of soil from the vertical face of the pit where sampling is to be done.

5. Samples are taken using a trowel, scoop, or coring device at the desired intervals. Be sure to scrape the vertical face at the point of sampling to remove any soil that may have fallen from above, and to expose fresh soil for sampling. In many instances, samples can be collected directly from the backhoe bucket.

6. If volatile organic analyses are required, transfer the sample into an appropriate, labeled sample container with a stainless steel lab spoon, or equivalent and secure the cap tightly. Place the remainder of the sample into a stainless steel, plastic, or other appropriate homogenization container, and mix thoroughly to obtain a homogenous sample representative of the entire sampling interval. Then, either place the sample into appropriate, labeled containers and secure the caps tightly; or, if composite samples are to be collected, place a sample from another sampling interval into the homogenization container and mix thoroughly. When compositing is complete, place the sample into appropriate, labeled containers and secure the caps tightly.

7. Abandon the pit or excavation according to applicable state regulations. Generally, shallow excavations can simply be backfilled with the removed soil material.

8.0 CALCULATIONS

This section is not applicable to this SOP.

9.0 QUALITY ASSURANCE/QUALITY CONTROL

There are no specific quality assurance (QA) activities which apply to the implementation of these procedures. However, the following QA procedures apply:

1. All data must be documented on field data sheets or within site logbooks.

2. All instrumentation must be operated in accordance with operating instructions as supplied by the manufacturer, unless otherwise specified in the work plan. Equipment checkout and calibration

activities must occur prior to sampling/operation, and they must be documented.

10.0 DATA VALIDATION

This section is not applicable to this SOP.

11.0 HEALTH AND SAFETY

When working with potentially hazardous materials, follow U.S. EPA, OHSA and corporate health and safety procedures, in addition to the procedures specified in the site specific Health & Safety Plan..

12.0 REFERENCES

Mason, B.J. 1983. Preparation of Soil Sampling Protocol: Technique and Strategies. EPA-600/4-83-020.

Barth, D.S. and B.J. Mason. 1984. Soil Sampling Quality Assurance User's Guide. EPA-600/4-84-043.

U.S. Environmental Protection Agency. 1984 Characterization of Hazardous Waste Sites - A Methods Manual: Volume II. Available Sampling Methods, Second Edition. EPA-600/4-84-076.

de Vera, E.R., B.P. Simmons, R.D. Stephen, and D.L. Storm. 1980. Samplers and Sampling Procedures for Hazardous Waste Streams. EPA-600/2-80-018.

ASTM D 1586-98, ASTM Committee on Standards, Philadelphia, PA.

APPENDIX A
Figures
SOP #2012
February 2000

FIGURE 1. Sampling Augers

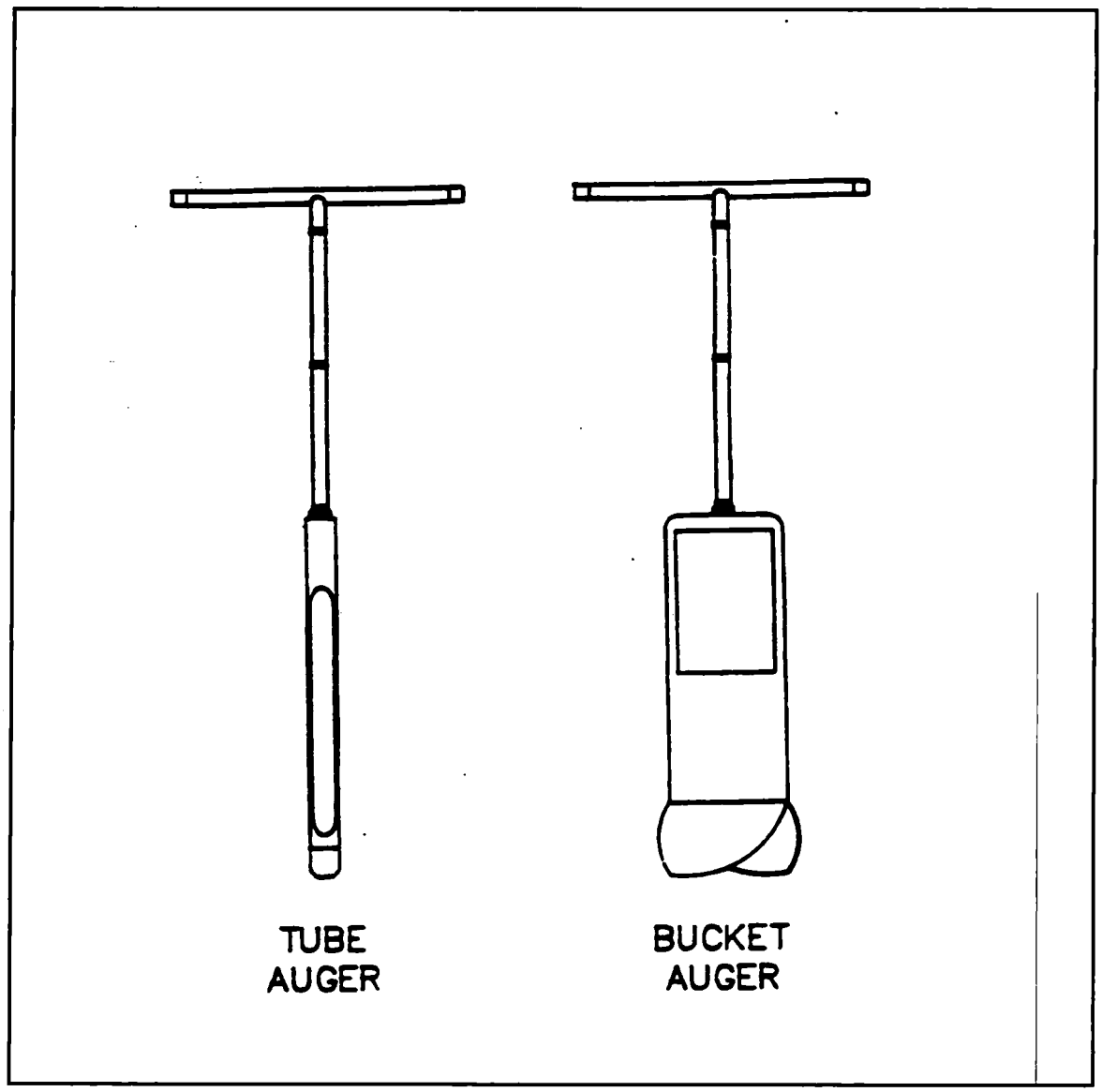

FIGURE 2. Sampling Trier

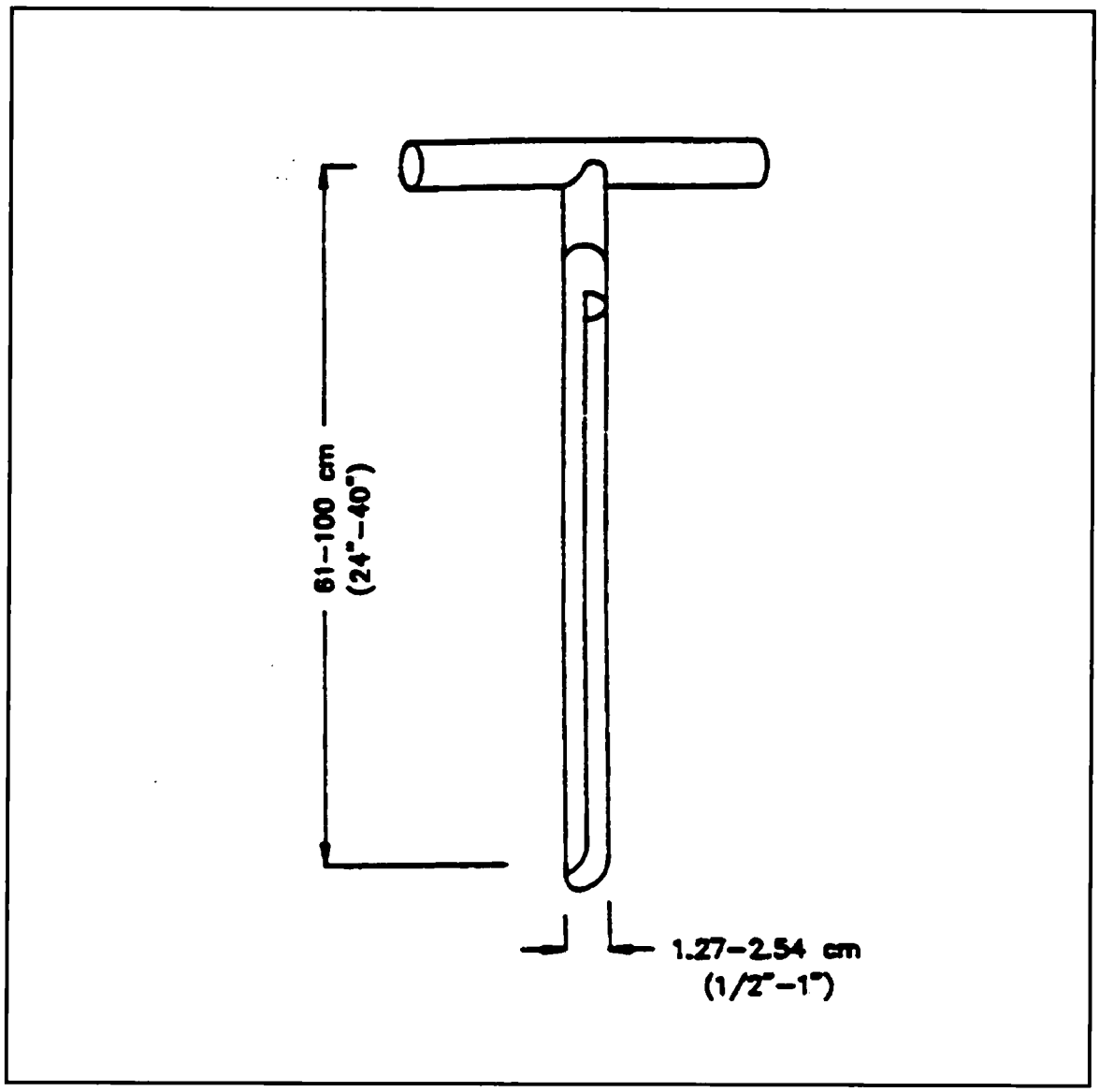

U. S. EPA ENVIRONMENTAL RESPONSE TEAM

STANDARD OPERATING PROCEDURES

MANUAL WATER LEVEL MEASUREMENTS

CONTENTS

1.0 SCOPE AND APPLICATION

2.0 METHOD SUMMARY

3.0 SAMPLE PRESERVATION, CONTAINERS, HANDLING AND STORAGE

4.0 POTENTIAL PROBLEMS

5.0 EQUIPMENT

6.0 REAGENTS

7.0 PROCEDURES

- 7.1 Preparation
- 7.2 Procedures

8.0 CALCULATIONS

9.0 QUALITY ASSURANCE/QUALITY CONTROL

10. DATA VALIDATION

11.0 HEALTH AND SAFETY

12.0 REFERENCES

13.0 APPENDIX

- A - Groundwater Level Data Form

SUPERCEDES: SOP #2043; Revision 0.0; 10/03/94; U.S. EPA Contract 68-C4-0022.

1.0 SCOPE AND APPLICATION

The purpose of this Standard Operating Procedure (SOP) is to set guidelines for the determination of the depth to water and separate phase chemical product (i.e., gasoline, oil, PCE, TCE) in an open borehole, cased borehole, monitor well, or piezometer. These standard operating procedures may be varied or changed as required, dependent on site conditions , and equipment limitations. In all instances, the actual procedures employed will be documented and described in an appropriate site report. Mention of trade names or commercial products does not constitute U.S. EPA endorsement or recommendation for use.

Generally, water-level measurements taken in boreholes, piezometers, or monitor wells are used to construct water table or potentiometric surface maps and to determine flow direction as well as other aquifer characteristics. Therefore, all water level measurements at a given site should preferably be collected within a 24 hour period. However, certain situations may produce rapidly changing groundwater levels that necessitate taking measurements as close in time as possible. Large changes in water levels among wells may be indicative of such a condition . Rapid groundwater level changes may occur due to:

- Atmospheric pressure changes
- Tidal influences
- Changes in river stage, impoundments levels, or flow in unlined ditches
- Pumping of nearby wells
- Precipitation

2.0 METHOD SUMMARY

A survey mark should be placed on the top of the riser pipe or casing as a reference point for groundwater level measurements. If the lip of the riser pipe is not flat, the reference point may be located on the grout apron or the top of the outer protective casing (if present). The measurement reference point should be documented in the site logbook and on the groundwater level data form (Appendix A), if used. All field personnel must be made aware of the measurement reference point being used in order to ensure the collection of comparable data.

Before measurements are made, water levels in piezometers and monitor wells should be allowed to stabilize for a minimum of 24 hours after well construction and development. In low yield situations, recovery of water levels to equilibrium may take longer. All measurements should be made to an accuracy of 0.01 feet. Water level measuring equipment must be decontaminated and, in general, measurements should proceed from the least to the most contaminated wells.

Open the well and monitor the headspace with the appropriate air monitoring instrument to determine the presence of volatile organic compounds. For electrical sounders lower the device into the well until the water surface is reached as indicated by a tone or meter deflection. Record the distance from the water surface to the reference point. Measurement with a chalked tape will necessitate lowering the tape below the water level and holding a convenient foot marker at the reference point. Record both the water level as indicated on the chalked tape section and the depth mark held at the reference point The depth to water is the difference between the two readings. Remove measuring device, replace riser pipe cap, and decontaminate equipment as necessary. Note that if a separate phase is present, an oil/water indicator probe is required for measurement of product thickness and water level.

3.0 SAMPLE PRESERVATION, CONTAINERS, HANDLING AND STORAGE

This section is not applicable to this standard operating procedure (SOP).

4.0 POTENTIAL PROBLEMS

1. Cascading water, particularly in open-hole or rock wells, may interfere with the measurement.

2. Some older types of electric sounders are only marked at five-foot intervals. A surveyor's tape is necessary to extrapolate between the 5-foot marks.

3. Oil or other product floating on the water column can insulate the contacts of the probe on an electric sounder and give false readings. For accurate level measurements in wells containing floating product, a special oil/water level indicator is required.

4. Tapes (electrical or surveyor's) may have damaged or missing sections, or may be spliced inaccurately.

5. An airline may be the only available means to make measurements in sealed production wells but the method is generally accurate only to approximately 0.2 foot.

6. When using a steel tape, it is necessary to lower the tape below the water level in order to make a measurement. This assumes knowledge of the approximate groundwater level.

5.0 EQUIPMENT

The electric water level indicator and the chalked steel tape are the devices commonly used to measure water levels. Both have an accuracy of 0.01 feet. Other field equipment may include:

- Air monitoring instrumentation

- Well depth measurement device
- Chalk
- Ruler
- Site logbook
- Paper towels and trash bags
- Decontamination supplies as outlined in Section 7.2 or the current approved site specific work plan
- Groundwater level data forms

6.0 REAGENTS

No chemical reagents are used in this procedure; however, decontamination solutions may be necessary. If decontamination of equipment is required, refer to ERT/REAC SOP #2006 Rev 0.0 08/11/94, *Sampling Equipment Decontamination*, and the current approved site specific work plan.

7.0 PROCEDURES

7.1 Preparation

1. Determine the number of measurements needed, the methods to be employed, and the equipment and supplies needed.
2. Decontaminate or pre-clean equipment, and ensure that it is in working order.
3. Coordinate schedule with staff, clients, and regulatory agency, if appropriate.
4. If this is an initial visit, perform a general site survey prior to site entry in accordance with the current approved site specific Health and Safety Plan.
5. Identify sampling locations.

7.2 Procedures

Procedures for determining water levels are as follows:

1. If possible, and when applicable, start at those wells that are least contaminated and proceed to those wells that are most contaminated.

2. Clean all the equipment entering the well(s) by the following decontamination procedure:

   - Triple rinse equipment with deionized water.
   - Wash equipment with an Alconox solution which is followed by a deionized water rinse.
   - Rinse with an approved solvent (e.g., methanol, isopropyl alcohol, acetone) as per the work plan, if organic contamination is suspected.
   - Place equipment on clean surface such as a teflon or polyethylene sheet to air dry.

3. Remove locking well cap, note well ID, time of day, and date in site logbook or an appropriate groundwater level data form.

4. Remove well cap.

5. If required by site-specific condition, monitor headspace of well with a photoionization detector (PID) or flame ionization detector (FID) to determine presence of volatile organic compounds, and record results in site logbook.

7. Lower water-level measuring device into the well. Electrical tapes are lowered to the water surface whereas chalked steel tapes are lowered generally a foot or more below the water surface. Steel tapes are generally chalked so that a 1-to 5-foot long section will fall below the expected water level.

8. For electrical tapes record the distance from the water surface, as determined by the audio signal or meter, to the reference measuring point and record in the site logbook. For chalked tapes, an even foot mark is held at the reference point, once the chalked section of the tape is below the water level. Both the water level on the tape and the foot mark held at the reference point is recorded. The depth to the water is then the difference between the two readings. In addition, note the reference point used (top of the outer casing, top of the riser pipe, ground surface, or some other reproducible position

on the well head). Repeat the measurement.

9. Remove all downhole equipment, replace well cap and locking steel caps.

10. Rinse all downhole equipment and store for transport to the next well. Decontaminate all equipment as outlined in Step 2 above.

11. Note any physical changes, such as erosion or cracks in protective concrete pad or variation in total depth of well, in field logbook or on groundwater level data form.

8.0 CALCULATIONS

To determine groundwater elevation above mean sea level, use the following equation:

$$E_W = E - D$$

where:

E_W	=	Elevation of water above mean sea level (feet) or local datum
E	=	Elevation above sea level or local datum at point of measurement (feet)
D	=	Depth to water (feet)

9.0 QUALITY ASSURANCE/QUALITY CONTROL

The following general quality assurance/quality control (QA/QC) procedures apply:

1. All data must be documented on field data sheets, groundwater level data forms, or within personal or site logbooks.

2. All instrumentation must be operated in accordance with operating instructions as supplied by the manufacturer, unless otherwise specified in the work plan.

3. Each well should be tested at least twice in order to compare results. If results do not agree to within 0.02 feet, a third measurement should be taken and the readings averaged. Consistent failure of consecutive readings to agree suggests that levels are changing because of one or more conditions as indicated in Section 1.

10.0 DATA VALIDATION

This section is not applicable to this SOP.

11.0 HEALTH AND SAFETY

The results of monitoring the well head and breathing zone with a FID or PID, as per section 7.2, may indicate the need to upgrade the personal protection level according to the current approved site Health and Safety Plan.

12.0 REFERENCES

Driscoll, F.G. 1986. Groundwater and Wells. Second Edition. Chapter 16. *Collection and Analysis of Pumping Test Data*. pp 534-579. Johnson Filtration Systems Inc. St. Paul, Minnesota.

U.S. Environmental Protection Agency, 1986. RCRA Groundwater Monitoring Technical Enforcement Guidance Document, pp. 207.

U.S. Environmental Protection Agency, 1987, A Compendium of Superfund Field Operations Methods. EPA/540/p-87/001 Office of Emergency and Remedial Response Washington, D.C. 20460.

APPENDIX A
Groundwater Level Data Form
SOP #2043
February 2000

FORM 1. Groundwater Level Data Form

PAGE __ OF __

SITE NAME:_____ LOGGER NAME: _____

LOG DATE: _____ WBS #: RIA

Well I.D.	Time	Elevation of well[1] (T.O.C.)	Depth to bottom of well (ft)	Depth to water (ft)	Depth to product (ft)	COMMENTS (pH, temperature, specific conductance)

TOC: top of casing (1) feet above mean sea level

MEASUREMENT REFERENCE POINT FROM __ GROUND SURFACE OR __ TOP OF CASING

Weather Conditions: Temperature(°C):_____ Rain: Heavy Medium Light (Circle one)

Other significant observations:

U. S. EPA ENVIRONMENTAL RESPONSE TEAM

STANDARD OPERATING PROCEDURES

MONITOR WELL DEVELOPMENT

CONTENTS

1.0 SCOPE AND APPLICATION*

2.0 METHOD SUMMARY*

3.0 SAMPLE PRESERVATION, CONTAINERS, HANDLING, AND STORAGE

4.0 INTERFERENCES AND POTENTIAL PROBLEMS*

5.0 EQUIPMENT/APPARATUS*

6.0 REAGENTS

7.0 PROCEDURES

- 7.1 Preparation
- 7.2 Operation*
- 7.3 Post-Operation

8.0 CALCULATIONS*

9.0 QUALITY ASSURANCE/QUALITY CONTROL*

10.0 DATA VALIDATION

11.0 HEALTH AND SAFETY

12.0 REFERENCES*

13.0 APPENDICES*

*These sections affected by Revision 0.1.

SUPERCEDES: SOP #2044; Revision 0.0; 2/18/00; U.S. EPA Contract 68-C99-223.

1.0 SCOPE AND APPLICATION

The purpose of this standard operating procedure (SOP) is to provide an overview of monitor well development practices. The purpose of monitor well development is to ensure removal of fine grained sediments (fines) from the vicinity of the well screen. This allows the water to flow freely from the formation into the well, and also reduces the turbidity of the water during sampling. The most common well development methods are: surging, jetting, overpumping, and bailing.

Surging involves raising and lowering a surge block or surge plunger inside the well. The resulting surging motion forces water into the formation and loosens sediment, pulled from the formation into the well. Occasionally, sediments must be removed from the well with a sand bailer to prevent sand locking of the surge block. This method may cause the sand pack around the screen to be displaced to a degree that damages its value as a filtering medium. Channels or voids may form near the screen if the filter pack sloughs away during surging (Keel and Boating, 1987).

Surging with compressed air is done by injecting a sudden charge of compressed air into the well with an air line so that water is forced through the well screen. The air is then turned off so that the water column falls back into the well and the process is repeated. Periodically, the air line is pulled up into a pipe string (educator) and water is pumped from the well using air as the lifting medium (air-lift pumping). The process is repeated until the well is sediment free. Method variations include leaving the air line in the pipe string at all times or using the well casing as the educator pipe.

Jetting involves lowering a small diameter pipe into the well and injecting a high velocity horizontal stream of water or air through the pipe into the screen openings. This method is especially effective at breaking down filter cakes developed during mud rotary drilling. Simultaneous air-lift pumping is usually used to remove fines.

Overpumping involves pumping at a rate rapid enough to draw the water level in the well as low as possible, and then allowing the well to recharge to the original level. This process is repeated until sediment-free water is produced.

Bailing includes the use of a simple manually operated check-valve bailer to remove water from the well. The bailing method, like other methods, should be repeated until sediment free water is produced. Bailing may be the method of choice in a shallow well or well that recharges slowly.

These are standard (i.e., typically applicable) operating procedures which may be varied or changed as required, dependent on site conditions, equipment limitations or limitations imposed by the procedure. In all instances, the ultimate procedures employed should be documented and associated with a final report.

Mention of trade names or commercial products does not constitute United States Environmental Protection

Agency (U.S. EPA) endorsement or recommendation for use.

2.0 METHOD SUMMARY

After installation, development of a well should occur as soon as it is practical. It should not occur any sooner than 48 hours after grouting is completed, especially if a vigorous well development method (i.e. surging) is being used. If a less vigorous method (i.e bailing) is used, it may be initiated shortly after installation. The method used for development should not interfere with the setting of the well seal.

Several activities must take place prior to well development. First, open the monitor well, take initial measurements (i.e., head space air monitoring readings, water level, total depth of the well) and record results in the site logbook. Develop the well by the appropriate method to accommodate site conditions and project objectives. Continue until the development water is clear and free of sediments, or until parameters such as pH, temperature, and specific conductivity stabilize. Containerize all purge water from wells with known or suspected contamination. Record final measurements in the site logbook. Decontaminate equipment as appropriate prior to use in the next well.

3.0 SAMPLE PRESERVATION, CONTAINERS, HANDLING, AND STORAGE

This section is not applicable to this SOP.

4.0 INTERFERENCES AND POTENTIAL PROBLEMS

The following problems may be associated with well development:

1. Overpumping is not as vigorous as surging and jetting, and is probably the most desirable method for monitor well development. The possibility of disturbing the filter pack is greatest with surging and jetting well development methods.

2. The introduction of external water or air by jetting may alter the hydro chemistry of the aquifer.

3. Surging with air may produce "air locking" in some formations, preventing water from flowing into the well.

4. The use of surge blocks in formations containing clay may cause plugging of the screen.

5. Small (2-inch nominal diameter) submersible pumps that will fit in 2-inch diameter well casing are especially susceptible to clogging if used in well development applications.

6. Chemicals/reagents used during the decontamination of drilling equipment may complicate well development.

5.0 EQUIPMENT/APPARATUS

The type of equipment used for well development is dependent on the diameter of the well and the development method. For example, the diameter of most submersible pumps is too large to fit into a two-inch inner diameter (I.D.) well, and other development methods should be used. Obtaining the highest possible yield is not usually an objective in developing monitor wells and vigorous development is not always necessary. Many monitor wells are constructed in fine-grained formations that would not normally be considered aquifers. Specifications for the drilling contract should include the necessary well development equipment (air compressors, pumps, air lines, surge blocks, generators).

6.0 REAGENTS

The use of chemicals in developing wells that will be used to monitor groundwater quality should be avoided if possible; however, polyphosphates (a dispersing agent), acids, or disinfectants are often used in general well development. Polyphosphates should not be used in thinly bedded sequences of sands and clays. The use of decontamination solutions may also be necessary. If decontamination of equipment is required at a well, refer to Environmental Response Team/Response Engineering and Analytical Contract (ERT/REAC) SOP #2006, *Sampling Equipment Decontamination* and the site specific work plan.

7.0 PROCEDURES

7.1 Preparation

1. Coordinate site access and obtain keys to well locks.

2. Obtain information on each well to be developed (i.e., drilling method, well diameter, well depth, screened interval, anticipated contaminants).

3. Obtain a water level meter, a depth sounder, air monitoring instruments, materials for decontamination, and water quality instrumentation capable of measuring, at a minimum, pH, specific conductivity, temperature, and turbidity. Dissolved oxygen (DO) and salinity are also useful parameters.

4. Assemble containers for temporary storage of water produced during well development. Containers must be structurally sound, compatible with anticipated contaminants, and easy to manage in the field. The use of truck-mounted or roll-off tanks may be necessary in some cases; alternately, a portable water treatment unit (i.e., activated carbon) may be used to decontaminate the purge water.

7.2 Operation

Development should be performed as soon as it is practical after the well is installed, but no sooner than 48 hours after well completion.

1. Assemble necessary equipment on a plastic sheet surrounding the well.

2. Record pertinent information in the site or personal logbook (personnel, time, location ID, etc.).

3. Open monitor well, take air monitor reading at the top of casing and in the breathing zone as appropriate.

4. Measure depth to water and the total depth of the monitor well. Calculate the water column volume of the well (Equation 1, Section 8.0).

5. Begin development and measure the initial pH, temperature, turbidity, and specific conductivity of the water and record in the site logbook. Note the initial color, clarity, and odor of the water.

6. Continue to develop the well and periodically measure the water quality parameters indicated in step 5 (above). Depending on project objectives and available time, development should proceed until these water quality parameters stabilize, or until the water has a turbidity of less than 50 nephelometric turbidity units (NTUs).

7. All water produced by development of contaminated or suspected contaminated wells must be containerized or treated. Each container must be clearly labeled with the location ID, date collected, and sampling contractor. Determination of the appropriate disposal method will be based on the analytical results from each well.

8. No water shall be added to the well to assist development without prior approval by the appropriate U.S. EPA ERT Work Assignment Manager (WAM) and/or appropriate state personnel. In some cases , small amounts of potable water may be added to help develop a poor yielding well. It is essential that at least five times the amount of water injected must be recovered from the well in order to assure that all injected water is removed from the formation.

9. Note the final water quality parameters in the site or personal logbook along with the following data:

   - ☐ Well designation (location ID)
   - ☐ Date(s) of well installation
   - ☐ Date(s) and time of well development

- Static water level before and after development
- Quantity of water removed, and initial and completion time
- Type and capacity of pump or bailer used
- Description of well development techniques

7.3 Post-Operation

1. Decontaminate all equipment;
2. Secure holding tanks or containers of development water;
3. Review analytical results and determine the appropriate water disposal method. Actual disposal of the purge water is generally carried out by the On-Scene Coordinator (OSC).

8.0 CALCULATIONS

To calculate the volume of water in the well, the following equation is used:

Well Volume (V) = • r^2 h (cf) [Equation 1]

where:

•	=	pi (3.14)
r	=	radius of monitoring well in feet (ft)
h	=	height of the water column in ft. [This may be determined by subtracting the depth to water from the total depth of the well as measured from the same reference point.]
cf	=	conversion factor in gallons per cubic foot (gal/ft^3) = 7.48 gal/ft^3. [In this equation, 7.48 gal/ft^3 is the necessary conversion factor.]

Monitor well diameters are typically 2-, 3-, 4-, or 6-inches. A number of standard conversion factors can be used to simplify the above equation using the diameter of the monitor well. The volume, in gallons per linear foot, for various standard monitor well diameters can be calculated as follows:
where:

V (gal/ft) = • r^2 (cf) [Equation 2]

•	=	pi
r	=	radius of monitoring well (feet)
cf	=	conversion factor (7.48 gal/ft^3)

For example, a two inch diameter well, the volume per linear foot can be calculated as follows:

$$\begin{aligned} \mathbf{V\ (gal/ft)} &= \mathbf{\cdot\ r^2\ (cf)} \quad \textbf{[Equation 2]} \\ &= \mathbf{3.14\ (1/12\ ft)^2\ 7.48\ gal/ft^3} \\ &= \mathbf{0.1631\ gal/ft} \end{aligned}$$

NOTE: The diameter must be converted to the radius in feet as follows:

$$\frac{\textbf{Well Diameter (inches)}}{\mathbf{12}} \mathbf{\ x\ 0.5 = Well\ Radius\ (feet)} \quad \textbf{[Equation 3]}$$

The volume in gallons/feet for the common size monitor wells are as follows:

Well diameter (inches)	2	3	4	6
Volume (gal/ft)	0.1631	0.3670	0.6524	1.4680

If you utilize the volumes for the common size wells above, Equation 1 is modified as follows: where:

$$\textbf{Well volume} = \textbf{(h)(f)} \quad \textbf{[Equation 4]}$$

h	=	height of water column (feet)
f	=	the volume in gal/ft calculated from Equation 2

9.0 QUALITY ASSURANCE/QUALITY CONTROL

There are no specific quality assurance activities, which apply to the implementation of these procedures. However, the following general quality assurance/quality control (QA/QC) procedures apply:

1. All data must be documented in site and/or personal logbooks.

2. All instrumentation must be operated in accordance with operating instructions as supplied by the manufacturer, unless otherwise specified in the work plan. Equipment checkout and calibration activities must occur prior to sampling/operation and must be documented.

10.0 DATA VALIDATION

This section is not applicable to this SOP.

11.0 HEALTH AND SAFETY

When working with potentially hazardous materials, follow U.S. EPA, Occupational Safety and Health (OSHA), and corporate health and safety practices.

12.0 REFERENCES

Driscoll, F. G. 1986. "Development of Water Wells." In: *Groundwater and Wells.* Second Edition. Chapter 15. Johnson Filtration Division, St. Paul, Minnesota. p. 497-533.

Freeze, Allan R. and John A. Cherry. 1979. *Groundwater*. Englewood Cliffs, NJ: Prentice-Hall, Inc.

Keel, J.F. and Kwasi Boating. 1987. "Monitoring Well Installation, Purging, and Sampling Techniques - Part 1: Conceptualizations". *Groundwater,* 25(3):300-313.

Keel, J.F. and Kwasi Boating. 1987. "Monitoring Well Installation, Purging, and Sampling Techniques - Part 2: Case Histories". *Groundwater*, 25(4):427-439.

13.0 APPENDICES

This section is not applicable to this SOP.

MONITOR WELL INSTALLATION

SOP#: 2048
DATE: 03/18/96
REV. #: 0.0

1.0 SCOPE AND APPLICATION

The purpose of this standard operating procedure (SOP) is to provide an overview of the methods used for groundwater monitor wells. Monitor well installation create permanent access for collection of samples to assess groundwater quality and the hydrogeologic properties of the aquifer in which contaminants may exist. Such wells should not alter the medium which is being monitored.

The most commonly used drilling methods are: the hollow-stem auger, cable tool, and hydraulic rotary. Rotary drilling can utilize mud rotary or air rotary methods.

These are standard (i.e., typically applicable) operating procedures which may be varied or changed as required, depending on site conditions, equipment limitations, or limitations imposed by the procedures themselves. In all instances, the ultimate procedures employed should be documented and described in the final report as well as in logbooks.

Mention of trade names or commercial products does not constitute United States Environmental Protection Agency (U.S. EPA) endorsement or recommendation for use.

2.0 METHOD SUMMARY

There is no ideal monitor well installation method for all conditions therefore, hydrogeologic conditions at the site as well as project objectives must be considered before deciding which drilling method is appropriate.

2.1 Hollow-Stem Augering

Outside diameters of hollow-stem augers generally range from 6 1/4 inches to 22 inches with corresponding inner diameters ranging from 2 1/4 inches to 13 inches. Auger lengths are usually 5 feet which allows easy handling. However, lengths of 10 or 20 feet may be used for deeper holes drilled with machines capable of handling the extended lengths. Formation samples can be taken in a number of ways, depending on the accuracy required. Cuttings may suffice for shallow depths but become less representative with depth, particularly below the water table. The most accurate samples are obtained with various coring devices, such as split spoons or shelby tubes which can be used inside the augers. Continuous cores can also be taken with a thin-walled tube which is inserted into the lowest auger and locked in place. The tube is retracted with a wire line and hoist after the hole has been advanced the length of the auger. A bottom plug in the cutting head or bit prevents cuttings from entering the augers until the first core sample is taken and the plug is knocked out.

In unconsolidated material, the augers serve as a temporary casing and gravel-packed wells can be constructed inside the augers and then the augers withdrawn. Well development is usually less difficult than with wells drilled by the mud rotary method because a bentonite drilling fluid is not normally used.

2.2 Cable Tool Drilling

Cable tool drilling is a percussion method in which a bit, attached to a drilling string, is lifted and dropped. The drilling string, consists (bottom to top) of the bit, drill stem, drilling jars, socket, and wire cable. A walking beam on the drilling rig provides the lifting and dropping motion to the wire cable and hence to the drilling string. The repeated action breaks or loosens the formation material which mixes with formation water or water added to the hole by the operator to form a slurry. The slurry facilitates removal of the cuttings which are periodically removed from the hole with a bailer. In unconsolidated formations, steel casing must be driven or pushed into the ground as the drilling progresses in order to prevent hole collapse. A hardened steel drive shoe on the bottom end of the

casing prevents damage during driving. A well may then be constructed inside the steel casing and the casing pulled back. In consolidated formations, the casing may be driven through the weathered zone, and seated in solid rock. The hole below the casing may remain open or may be fitted with a smaller diameter inner casing and screen, depending on the sampling requirements. Depending on formation material, extensive well development may often not be necessary.

2.3 Rotary Drilling

2.3.1 Mud Rotary Method

In the mud rotary method the drill bit is rotated rapidly to cut the formation material and advance the borehole. The drill bit is attached to hollow drilling rods which transfer power from the rig to the bit. In conventional rotary drilling, cuttings are removed by pumping drilling fluid (water, or water mixed with bentonite or other additives) down through the drill rods and bit, and up the annulus between the borehole and the drill rods. The drilling fluid flows into a mud pit where the cuttings settle out and then is pumped back down the drill rods. The drilling fluid also cools the bit and prevents the borehole from collapsing in unconsolidated formations.

Sampling may be done from the cuttings but samples are generally mixed and the amount of fine material may not be accurately represented. Coring may be done through the drill rods and bit if a coring bit (with a center opening big enough to allow passage of the coring tube) is used. When drilling unconsolidated formations, a temporary surface or shallow casing may have to be installed in order to prevent cross-contamination, hole collapse, or wall erosion by the drilling fluid. Casing (riser pipe), screen, and gravel pack are usually installed in the open hole or through the surface casing. Once the well is constructed, extensive well development may be necessary in order to remove drilling fluid from the formation.

2.3.2 Air Rotary Method

The air rotary method uses air as the drilling fluid. Air is forced down the drill rods by an air compressor, escapes out of the bit and returns to the surface in the annular space between the hole wall and the drill string. Cuttings are moved out of the hole by the ascending air and collect around the rig. Cuttings are mixed and may not always be representative of the depth currently being drilled. In the conventional air rotary method, the drill string operates in a manner similar to that described for the mud rotary system. In a "hammer" or "down-the-hole" air rotary method, the bit is pneumatically driven rapidly against the rock in short strokes while the drilling string slowly rotates. The use of air rotary methods are generally limited to consolidated and semi-consolidated formations. Casing is often used in semi-consolidated formations and through the weathered portion of consolidated formations to prevent hole collapse. In environmental work, the air supply must be filtered to prevent introduction of contamination into the borehole.

3.0 SAMPLE PRESERVATION, CONTAINERS, HANDLING, AND STORAGE

Often, a primary objective of the drilling program is to obtain representative lithologic or environmental samples. The most common techniques for retrieving samples are:

In unconsolidated formations:

- Split spoon sampling, carried out continuously or at discrete intervals during drilling, as summarized in ASTM Method D-1586-84, Split Barrel Sampling
- Shelby tube sampling when an undisturbed sample is required from clayey or silty soils, especially for geotechnical evaluation or chemical analysis
- Cutting collection when a general lithologic description and approximate depths are sufficient

In consolidated formations:

- Rock coring at continuous or discrete intervals
- Cutting collection when a general lithologic description and approximate depths are sufficient

When collecting environmental samples, the amount of sample to be collected and the proper sample container type (i.e., glass, plastic), chemical preservation, and storage requirements are dependent on the matrix being sampled and the parameter(s) of interest. Sample preservation, containers, handling

and storage for air and waste samples are discussed in the specific SOPs for the technique selected.

4.0 INTERFERENCES AND POTENTIAL PROBLEMS

Advantages and disadvantages of the various drilling methods are summarized below.

4.1 Auger Drilling

The advantages of auger drilling are:

- Relatively fast and inexpensive
- Because augers act as temporary casing, drilling fluids are not used resulting in reduced well development

The disadvantages of auger drilling are:

- Very slow or impossible to use in coarse materials such as cobble or boulders
- Cannot be used in consolidated formations and is generally limited to depths of approximately 100 feet in order to be efficient

4.2 Cable Tool Drilling

The advantages of cable tool drilling are:

- Relatively inexpensive with minimum labor requirements
- The water table and water bearing zones are easily identified
- Driven casing stabilizes borehole and minimizes potential for cross-contamination
- Especially successful in drilling caving formations or formations containing boulders
- Accurate formation samples can usually be obtained from cuttings

The disadvantages of cable tool drilling are:

- Extremely slow rate of drilling
- Necessity to drive casing may limit depth in large diameter holes.

4.3 Rotary Drilling

4.3.1 Mud Rotary Drilling

The advantages of mud rotary drilling are:

- Fast, more than 100 feet of borehole advancement per day is common
- Provides an open borehole, necessary for some types of geophysical logging and other tests

The disadvantages of mud rotary drilling are:

- Potential for cross-contamination of water-bearing zones
- Drill cuttings may be mixed and not accurately represent lithologies at a given drilling depth
- Drilling mud may alter the groundwater chemistry
- Water levels can only be determined by constructing wells
- Drilling mud may change local permeability of the formation and may not be entirely removed during well development
- Disposal of large volumes of drilling fluid and cuttings may be necessary if they are contaminated

4.3.2 Air Rotary Drilling

The advantages of air rotary drilling are:

- Fast, more than 100 feet of borehole advancement a day is possible
- Preliminary estimates of well yields and water levels are often possible
- No drilling fluid to plug the borehole

The disadvantages of air rotary drilling are:

- C Generally cannot be used in unconsolidated formations
- C In contaminated zones, the use of high-pressure air may pose a significant hazard to the drill crew because of transport of contaminated material up the hole
- C Introduction of air to the groundwater could reduce concentration of volatile organic compounds

5.0 EQUIPMENT

The following equipment is necessary for the site geologist:

- C Metal clipboard box case (container for well logs)
- C Ruler
- C Depth sounder
- C Water level indicator
- C All required health and safety gear
- C Sample collection jars
- C Trowels
- C Description aids (Munsell color chart, grain size charts, etc.)
- C Geolis® Logbooks (Appendix A)
- C Field Logbook

Equipment and tools to install the well are normally provided by the drilling contractor.

6.0 REAGENTS

Reagents are not required for preservation of soil samples. Samples should, however, be cooled to 4° C and protected from sunlight in order to minimize any potential reaction due to the light sensitivity of the sample. Decontamination of drilling equipment should follow the Sampling Equipment Decontamination SOP and the site-specific work plan.

7.0 PROCEDURES

7.1 Preparation

All drilling and well installation programs must be planned and supervised by a professional geologist/hydrogeologist.

The planning, selection and implementation of any monitor well installation program should include the following:

- C Review of existing data on site geology and hydrogeology including publications, air photos, water quality data, and existing maps. These may be obtained from local, state or federal agencies
- C Assesment of the site to determine potential access problems for drill rig, locate water supply sources, establish equipment storage area, and observe outcrops
- C Perform utilities check, note location of underground utilities and of overhead electrical wires
- C Preparation of a Site Safety Plan
- C Select drilling, sampling and well development methods
- C Determination of well construction specifications (i.e., casing and screen materials, casing and screen diameter, screen length and screen interval, filter pack and screen slot size)
- C Determination of the need for containing drill cuttings and fluids and their method of disposal
- C Preparation of work plan including all of the above
- C Preparation of and execute the drilling contract

7.2 Field Preparation

Prior to mobilization, the drill rig and all associated equipment should be thoroughly decontaminated by a steam/pressure washer to remove all oil, grease, mud, etc. Before drilling each boring, all the "down-the-hole" drill equipment should be steam cleaned and rinsed with potable water to minimize cross-contamination. Special attention should be given to the threaded section of the casings, and to the drill rods. All drilling equipment should be steam-cleaned at completion of the project to ensure that no contamination is transported to or from the sampling site.

7.3 Well Construction

The well casing material should not interact with the groundwater. Well casings for environmental projects are usually constructed of polyvinyl chloride (PVC), Teflon™, fiberglass, or stainless steel. Details of the construction methods are given in Sections 7.3.1 and 7.3.2.

7.3.1 Bedrock Wells

Wells completed in bedrock will be drilled using the air or mud rotary method. Crystalline rock wells are usually drilled most efficiently with the air rotary method while consolidated sedimentary formations are drilled using either the air rotary or mud rotary method. The compressed air supply will be filtered prior to introduction into the borehole to remove oil or other contaminants. Bedrock wells may be completed as an open-hole, providing that borehole cave-in is not a possibility.

Bedrock wells will be advanced with air or mud rotary methods until a minimum of 5 feet of competent rock has been drilled. Minimum borehole diameter will be 8 inches. The drill string will then be pulled from the borehole and 6-inch I.D. Schedule 80 or 40 PVC casing inserted. Portland cement/bentonite grout will be pumped into the hole and up the annular space outside the casing. After the grout has set (minimum of 24 hours), the cement will be drilled out and the borehole advanced to the desired depth. Figure 1 (Appendix B) shows typical construction details for an open-hole bedrock well.

The preferred method of well completion for the bedrock wells will be open-hole. However, if the open borehole is subject to cave-in, the well(s) will be completed as screened and cased sand-packed wells. For details of completion see Section 7.3.2.

7.3.2 Overburden Well Construction

Any of the drilling methods discussed in this SOP can be used to drill or set a well in the overburden. The hollow-stem method is the preferred choice for shallow (<100 ft.) overburden wells because the well can be constructed inside of the augers. Details of the construction are provided below and are shown in Figure 2 (Appendix B).

1. The screen slot size will be determined by the site hydrologist, based upon sand-pack size. The length of screen used will be site-dependent. Casing sections will be flush-threaded. Screw-threaded bottom plugs will be used. To prevent introduction of contaminants into the well, no glue-connected fittings will be used. Each piece of PVC pipe, screen, and the bottom plug will be steam-cleaned before lowering into the borehole. The site hydrogeologist is responsible for the supervision of all steam cleaning procedures.

2. The annular space between the well screen and the borehole wall will be filled with a uniform gravel/sand pack to serve as a filter media. For wells deeper than approximately 50 feet, or when recommended by the site geologist, the sand pack will be emplaced using a tremie pipe. A sand slurry composed of sand and potable water will be pumped through the tremie pipe into the annulus throughout the entire screened interval, and over the top of the screen. Allowance must be made for settlement of the sand pack.

3. The depth of the top of the sand will be determined using the tremie pipe, thus verifying the thickness of the sand pack. Additional sand shall be added to bring the top of the sand pack to approximately 2 to 3 feet above the top of the well screen. Under no circumstances should the sand pack extend into any aquifer other than the one to be monitored. In most cases, the well design can be modified to allow for a sufficient sand pack without threat of crossflow between producing zones through the sand pack.

4. In materials that will not maintain an open hole using hollow-stem augers, the temporary or outer casing will be withdrawn gradually during placement of sand pack/grout. For example, after filling two feet with sand pack, the outer casing should be withdrawn 2 feet. This step of placing more gravel and withdrawing the outer casing should be repeated until the level of the sand pack is approximately 3 feet above the top of the well screen. This ensures that there is no locking of the permanent (inner) casing in the outer casing.

5. A bentonite seal of a minimum 2-foot vertical thickness will be placed in the annular space above the sand pack to separate the sand pack from the cement surface seal. The bentonite will be placed through a tremie pipe or poured directly into the annular space, depending upon the depth and site conditions. The bentonite will be pourable pellets. The hydrogeologist will record the start and stop times of the bentonite seal emplacement, the interval of the seal, the amount of bentonite that was used, and problems that arise. The type of bentonite and the supplier will also be recorded.

   A cap placed over the top of the well casing before pouring the bentonite pellets will prevent pellets from entering the well casing.

6. If a slurry of bentonite is used as annular seal, it is prepared by mixing powdered or granular bentonite with potable water. The slurry must be of sufficiently high specific gravity and viscosity to prevent its displacement by the grout to be emplaced above it. As a precaution (regardless of depth) and depending on fluid viscosity, a few handfuls of bentonite pellets may be added to solidify the bentonite slurry surface.

7. Cement and/or bentonite grout is placed from the top of the bentonite seal to the ground surface.

   Only Type I or II cement without accelerator additives may be used. An approved source of potable water must be used for mixing grouting materials. The following mixes are acceptable:

- Neat cement, a maximum of 6 gallons of water per 94 pound bag of cement
- Granular bentonite, 1.5 pounds of bentonite per 1 gallon of water
- Cement-bentonite, 5 pounds of pure bentonite per 94 pound bag of cement with 7-8 gallons of water
- Cement-bentonite, 6 to 8 pounds of pure bentonite per 94 pound bag of cement with 8-10 gallons of water, if water mixed
- Non-expandable cement, mixed at 7.5 gallons of water to one half (1/2) teaspoon of Aluminum Hydroxide, 94 pounds of neat cement (Type I) and 4 pounds of bentonite
- Non-expandable cement, mixed at 7 gallons of water to one half (1/2) teaspoon of Aluminum Hydroxide, 94 pounds of neat cement (Type I and Type II)

8. Grout is pumped through a tremie pipe (normally a 1.25-inch PVC or steel pipe) to the bottom of the annulus until undiluted grout flows from the annulus at the ground surface

9. In materials that will not maintain an open hole, the temporary steel casing should be withdrawn in a manner that prevents the level of grout from dropping below the bottom of the casing.

10. Additional grout may be added to compensate for the removal of the temporary casing and the tremie pipe to ensure that the top of the grout is at or above ground surface. After the grout has set (about 24 hours), any depression due to settlement is filled with a grout mix similar to that described above.

11. The protective casing should now be set. Casing may be a 5 foot minimum length of black iron or galvanized pipe extending about 1.5 to 3 feet above the ground surface, and set in concrete or cement grout. The protective casing diameter should be 4 inches greater than the well casing. A 0.5-inch drain hole may be installed near ground level. A flush-mount protective casing may also be used in areas of high traffic or where access to other areas would be limited by a well stick-up.

12. A protective steel cap, secured to the protective casing by a padlock, should be installed.

13. Steel guard posts should be installed around the protective casing in areas where vehicle traffic may be a problem. Posts should have a minimum diameter of 3 inches and be a

minimum of 4 feet high.

14. All monitor wells should be labelled and dated with paint or steel tags.

7.4 Well Development

Well development is the process by which the aquifer's hydraulic conductivity is restored by removing drilling fluids, and fine-grained formation material from newly installed wells. Two methods of well development that are commonly used are surging and bailing, and overpumping. A well is considered developed when the pH and conductivity of the groundwater stabilizes and the measured turbidity is <50 nephelometric turbidity units (NTUs).

Surging and bailing will be performed as follows:

1. Measure the total depth (TD) of the well and depth to water (DTW).

2. Using an appropriately sized surge block, surge 5-foot sections of well screen, using 10-20 up/down cycles per section. Periodically remove the surge block and bail accumulated sediment from the well, as required.

3. For open-hole wells, a 6-inch surge block will be used inside the cased portion of the well. Sediments will be bailed periodically, as required. Overpumping may be used in combination with surging and bailing for development of bedrock wells. The method(s) used will be based on field conditions encountered, and will be determined by the site hydrogeologist. However, sediment will initially be removed from the wells by bailing in order to minimize the volume of development water generated.

The pump used must be rated to achieve the desired yield at a given depth. The pump system should include the following:

- A check valve to prevent water from running back into the well when the pump is shut off
- Flexible discharge hose
- Safety cable or rope to remove the pump from the well
- Flow meter monitoring system (measuring bucket or inline flow meter)
- Generator
- Amp meter, to measure electrical current (load)

The amp meter is used to monitor pump performance. If the pump becomes clogged, the current will increase due to stress on the pump. If the water level drops below the intake ports, the current will drop due to decreased resistance on the pump.

8.0 CALCULATIONS

To maintain an open borehole during rotary drilling, the drilling fluid must exert a pressure greater than the formation pore pressure. Typical pore pressures for unconfined and confined aquifers are 0.433 define (psi/ft) and 0.465 psi/ft, respectively.

The relationship for determining the hydrostatic pressure of the drilling fluid is:

Hydrostatic Pressure (psi) = Fluid Density (lb/gal) x Height of Fluid Column (ft) x 0.052

The minimum grout volume necessary to grout a well can be calculated using:

Grout Vol (ft^3) = Vol of Borehole (ft^3) - Vol of Casing (ft^3) = $L (r_B^2 - r_C^2)$

where:

L	=	length of borehole to be grouted (ft)
r_B	=	radius of boring (ft)
r_C	=	radius of casing (ft)

9.0 QUALITY ASSURANCE/ QUALITY CONTROL

There are no specific quality assurance activities that apply to the implementation of these procedures. However, the following general QA procedures apply:

1. All data must be documented on standard well completion forms, field data sheets or within field/site logbooks. Descriptive logs, pump tests, and well completion date are entered on Geolis® forms. The Geolis® forms are used to ensure data is collected uniformly by all Site Geologists and provide

input to a standardized computer well file. Appendix A contains examples of Geolis® forms used to record descriptions of geologic samples.

2. All instrumentation must be operated in accordance with operating instructions as supplied by the manufacturer, unless otherwise specified in the work plan. Equipment checkout and calibration activities must occur prior to sampling/operation and must be documented.

10.0 DATA VALIDATION

This section is not applicable to this SOP.

11.0 HEALTH AND SAFETY

Drilling rigs and equipment present a variety of safety hazards. REAC personnel working around drilling rigs should know the position of the emergency "kill" switch. Wirelines and ropes should be inspected and frayed or damaged sections discarded. Swivels and blocks should turn freely. Gages should be operational and controls clearly marked. All underground utilities should be clearly marked, and drillers should be aware of any overhead hazards such as power lines. Avoid drilling in these areas. Ear protection should be worn when working around drilling equipment for extended periods of time, particularly air rotary equipment. Failure to follow safety procedure or wear the proper personal protection gear on the part of either the drilling crew or REAC personnel may result in dismissal from the job.

When working with potentially hazardous materials, follow U.S. EPA, OSHA, and corporate health and safety practices.

12.0 REFERENCES

American Society for Testing and Materials. 1991. Annual Book of ASTM Standards. Designation: D5092-90 Standard Practice for Design and Installation of Groundwater Monitoring Wells in Aquifers. p. 1081-1092. Philadelphia, PA.

Boateng, K., P.C. Evens, and S.M. Testa. 1984. "Groundwater Contamination of Two Production Wells: A Case History." *Groundwater Monitoring Review*, V.4, No. 2, p. 24-31.

Keely, J.F. and Kwasi Boateng. 1987. "Monitoring Well Installation, Purging, and Sampling Techniques - Part 1: Conceptualizations." *Groundwater* V. 25, No. 3, p. 300-313.

Keely, J.F. and Kwasi Boateng. 1987. "Monitoring Well Installation, Purging, and Sampling Techniques - Part 2: Case Histories." *Groundwater* V. 25, No. 4, p. 427-439.

Driscoll, F.G. 1986. *Groundwater and Wells* (2nd ed.): Johnson Division, UOP Inc., St. Paul, MN. p. 1089

U.S. EPA. 1987. A Compendium of Superfund Field Operations Methods. EPA/540/p-87/001 Office of Emergency and Remedial Responses. Washington, DC.

APPENDIX A

Geolis Forms

Form 1. Geolis® Borehole Logging Form

GEOLIS® Borehole Logging Form

COMPANY: _____ LOCATION ID: _____

CLIENT: _____ DATE: _____

PROJECT: _____ LOGGER: _____

SITE / AREA: _____ SIGNATURE: _____

SAMPLING METHOD: SPS - CSS - STB - CTS - CUT - COR - NS

OTHER: _____

SAMPLING INTERVAL: _____ TO _____ FT/M BGS

RECOVERY: _____ / _____ FT/M NA

BLOW COUNT: [ ] [ ] [ ] [ ] / [ ] IN/CM NA

RQD: _____ % NA

FLUID ENTRY/ LOSS ZONES: _____ FT/M BGS _____ GPM

_____ FT/M BGS _____ GPM

ANALYTICAL SAMPLE ID INTERVAL (FT/M BGS)

_____ _____ - _____

TYPE / LAB : UND - DIS - CMP / MOB - GEO - CHM - _____ / _____

_____ _____ - _____

TYPE / LAB : UND - DIS - CMP / MOB - GEO - CHM - _____

SAMPLING INTERVAL No.: _____

LITHOLOGIC INTERVAL No.: _____

LITHOLOGIC INTERVAL: _____ TO _____ FT/M BGS

LITHOLOGY ARCHIVED? YES - NO

NO RECOVERY

MATERIAL: NATURAL - FILL - UNCERTAIN

OBSERVED: STN - SHN - ODR - PRD - NA - OTHER: _____

INSTRUMENT 1 TYPE: _____ READING: _____

INSTRUMENT 2 TYPE: _____ READING: _____

OVERBURDEN

SECONDARY

SECONDARY TYPE: NA - BED - CLS - MIX

COLOR: MUN - GSA _____

COLORATION: UNI - STN - MOT - VAR

BOULDERS: _____ % MAX DIAM: _____ IN

COBBLES: _____ % MAX DIAM: _____ IN

TEXTURE: C - M - F

GRAVEL: _ _ _ _____ % _____ %

SAND: _ _ _ _____ % _____ %

SILT: _____ % _____ %

CLAY: _____ % _____ %

ORGANIC: _____ % _____ %

ROUNDNESS:

GRAVEL: FAC - STR - ANG - SUB - RND - NA

SAND: ANG - SUB - RND - NA

SORTING: WEL - MOD - POR - NA

PLASTICITY: NON - LOW - MOD - HGH - NA

MOISTURE: DRY - MST - WET - SAT - NA

CEMENTATION: NON - SLT - MOD - WEL - NA

GRAIN TYPE: QTZ - FRG - FOS - BIO - NA _____

MATRIX: MSM - CSM - CAL - OXD - ARG - SIL - NA

STRENGTH:

COHESIVE: VSF - SFT - FRM - STF - VST - HRD

NONCOHESIVE: VDN - DEN - FIR - LSE - NA

UPPER CONTACT: SHP - GRD - DIF - SME - NA

BEDDING THICK: _____ IN/CM No.: _____

TYPE: XBD - RPL - HOR - INC - NA

MAS - LNS - LAM - GRU - GRD

GRAPHIC LOG

BEDROCK

SECONDARY

SECONDARY TYPE: NA - BED - VEN - MIX

COLOR: MUN - GSA _____

ROCK TYPE: OTHER: _____

SED: SHL - SLT - SST - CGL - LST - DOL - COL

MET: SLA - PHY - SHS - GNS - HRN - QZT - MBL

IGN: GRN - RHY - BSL - GBR - TUF - BRC

TEXTURE: C - M - F NA

GRAVEL: _ _ _ _____ % _____ %

SAND: _ _ _ _____ % _____ %

SILT: _____ % _____ %

CLAY/LIME MUD: _____ % _____ %

GRAIN TYPE: QTZ - FRG - FOS - BIO - NA

MATRIX: CAL - MIC - OXD - ARG - SIL - ORG - NA

STRENGTH: EWK - VWK - WEK - MOD STR - VST - EST

UPPER CONTACT: SHP - GRD - DIF - SAM - NA

SECONDARY POROSITY: VUG - FRC - BED - NA - OTHER HGH - MOD - LOW

WEATHERING: FRS - SLT - MOD - HGH - CPL - NA

STRAT UNIT: [ ]

NOTE LINE : [ ]

NEXT INTERVAL: SAMP/LITH No. _____ / _____ DEPTH INTERVAL _____ TO _____ NOT SAMPLED NO RECOVERY

NATURAL FRACTURE SETS

INTERVAL (FT/M BGS)	#/FT-M	DIP	DIR	FILL/SHAPE/ROUGH/SURFACE
–				FILL: OPN - PRT - FUL SHAPE: PLN - CUR - UND - STP - IRR ROUGH: SMH - MOD - RGH SURFACE: CLN - MIN - OXD - STN - WTH
–				FILL: OPN - PRT - FUL SHAPE: PLN - CUR - UND - STP - IRR ROUGH: SMH - MOD - RGH SURFACE: CLN - MIN - OXD - STN - WTH
–				FILL: OPN - PRT - FUL SHAPE: PLN - CUR - UND - STP - IRR ROUGH: SMH - MOD - RGH SURFACE: CLN - MIN - OXD - STN - WTH
–				FILL: OPN - PRT - FUL SHAPE: PLN - CUR - UND - STP - IRR ROUGH: SMH - MOD - RGH SURFACE: CLN - MIN - OXD - STN - WTH

COMMENTS: (1) _____

(2) _____

COPYRIGHT © 1991 by Roy F. Weston, Inc.

GEOLIS Version 1.4 JAN 1995 G030195

APPENDIX A (Cont'd)

Geolis Forms

Form 2. Geolis® Well Construction Form

GEOLIS® Well Construction Form

Sheet ____ of ____

COMPANY: _____ LOCATION ID: _____

PROJECT: _____ DATE: _____

PROPERTY: _____ LOGGER: _____

SITE/AREA: _____ / _____ SIGNATURE: _____

START DATE: _____ SURVEYED ELEVATIONS (MSL) DEPTH TO WATER DATE / TIME

COMPLETION DATE: _____ GROUND LEVEL: _____ FT/M _____ FT/M(TOC) _____

WELL STATUS: PMP - ABN - COL - NOR MEASURING POINT: _____ FT/M _____ FT/M(TOC) _____

STATUS DATE: _____ (TOP OF CASING) _____ FT/M(TOC) _____

WELL DIAGRAM - NOT TO SCALE	DEPTH (FT. BGS)	WELL CODE
	0	GRS

WELL TYPE: SCREEN - MULTIPLE SCREEN - OPEN HOLE - NESTED - PROBE

CASING: SINGLE - DOUBLE - TRIPLE COMPLETION: FLUSH - PROT - VAULT - CAP - NA

TOTAL NO. OF SCREENS/WELLS: _____ SCREEN/WELL NO.: _____

WELL USE: DOM - PUB - IRR - FIR - MON - HYD - EXT - DEW - RCH - VEW - INJ - OTH: _____

WELL DESIGN CONSTRUCTION

CASING #1 (INNERMOST): DIAMETER: _____ IN/CM INTERVAL: _____ TO _____ FT/M BGS

TYPE: PVC - STN - LCS - GAL - ____ SCHEDULE: 5 - 10 - 20 - 40 - 80 - ____

CASING JOINTS: FLT - BUT - EUT - SOL - WLD - SCW - CAM - OTH: _____

CASING #2: DIAMETER: _____ IN/CM INTERVAL: _____ TO _____ FT/M BGS

TYPE: PVC - STN - LCS - GAL - ____ SCHEDULE: 5 - 10 - 20 - 40 - 80 - ____

CASING #3 (OUTERMOST): DIAMETER: _____ IN/CM INTERVAL: _____ TO _____ FT/M BGS

TYPE: PVC - STN - LCS - GAL - ____ SCHEDULE: 5 - 10 - 20 - 40 - 80 - ____

STICK UP: INNER CASING: _____ FT/M OUTER CASING: _____ FT/M

GROUT: TYPE: CMT - C/B - BEN - HSB - OTH: _____

INTERVAL: _____ TO _____ FT/M BGS

PLACEMENT: TRM - PRS - GRV CENTRALIZERS: NON - 1 - 2 - 3 - OTH: _____

SEAL: TYPE 1: _____ INTERVAL: _____ TO _____ FT/M BGS

TYPE 2: _____ INTERVAL: _____ TO _____ FT/M BGS

SAND PACK: TYPE: _____ INTERVAL: _____ TO _____ FT/M BGS

SCREEN OR DEVICE: DIAMETER: _____ IN/MM INTERVAL: _____ TO _____ FT/M BGS

TYPE: PVC - STN - LCS - TEF - CER - HDP - OTH: _____

SLOTS: CON - SLH - SLV - BRG - CUT - OTH: _____

SLOT SIZE: 6 - 10 - 20 - 30 - 40 - _____ SLOT

STRAT UNIT MONITORED: _____

ESTIMATED WELL YIELD: _____ GPM/LPM DRAWDOWN: _____ FT/M BMP

WATER SAMPLING SYSTEM: NON - PMP - PKR - MLS TYPE: _____

SEAL INTERVAL: _____ TO _____ FT/M BGS INTAKE DEPTH: _____ FT/M BGS

NOTES: _____

OPEN HOLE: DIAMETER 1: _____ IN/CM INTERVAL: _____ TO _____ FT/M BGS

DIAMETER 2: _____ IN/CM INTERVAL: _____ TO _____ FT/M BGS

SILT TRAP/SUMP: YES - NO INTERVAL: _____ TO _____ FT/M BGS

INSIDE WELL T.D.: _____ FT/M BGS COLLAPSE/BACKFILL: COL - BFL - BTH - NON

COLLAPSE INTERVAL: _____ TO _____ FT/M BGS

BACKFILL INTERVAL: _____ TO _____ FT/M BGS TYPE: _____

COMMENTS: _____

WELL CONSTRUCTION CODES

GRS = GROUND SURFACE	TSC = TOP OF SCREEN
BPC = BOTTOM OF PROTECTIVE CASING	TST = TOP OF SILT TRAP
TSB = TOP OF BENTONITE SEAL	WTD = TOTAL DEPTH INSIDE WELL
TBR = TOP OF BEDROCK	BTD = BOREHOLE TOTAL DEPTH
BOC = BOTTOM OF OUTER CASING	TOC = TOP OF CASING (INNER)
TSP = TOP OF SAND PACK	BGS = BELOW GROUND SURFACE

COPYRIGHT © 1990, 1994 by Roy F. Weston, Inc.

GEOLIS Version 2.0 DEC 1994 G051294

APPENDIX B

Figures

FIGURE 1. Typical Bedrock Well Construction

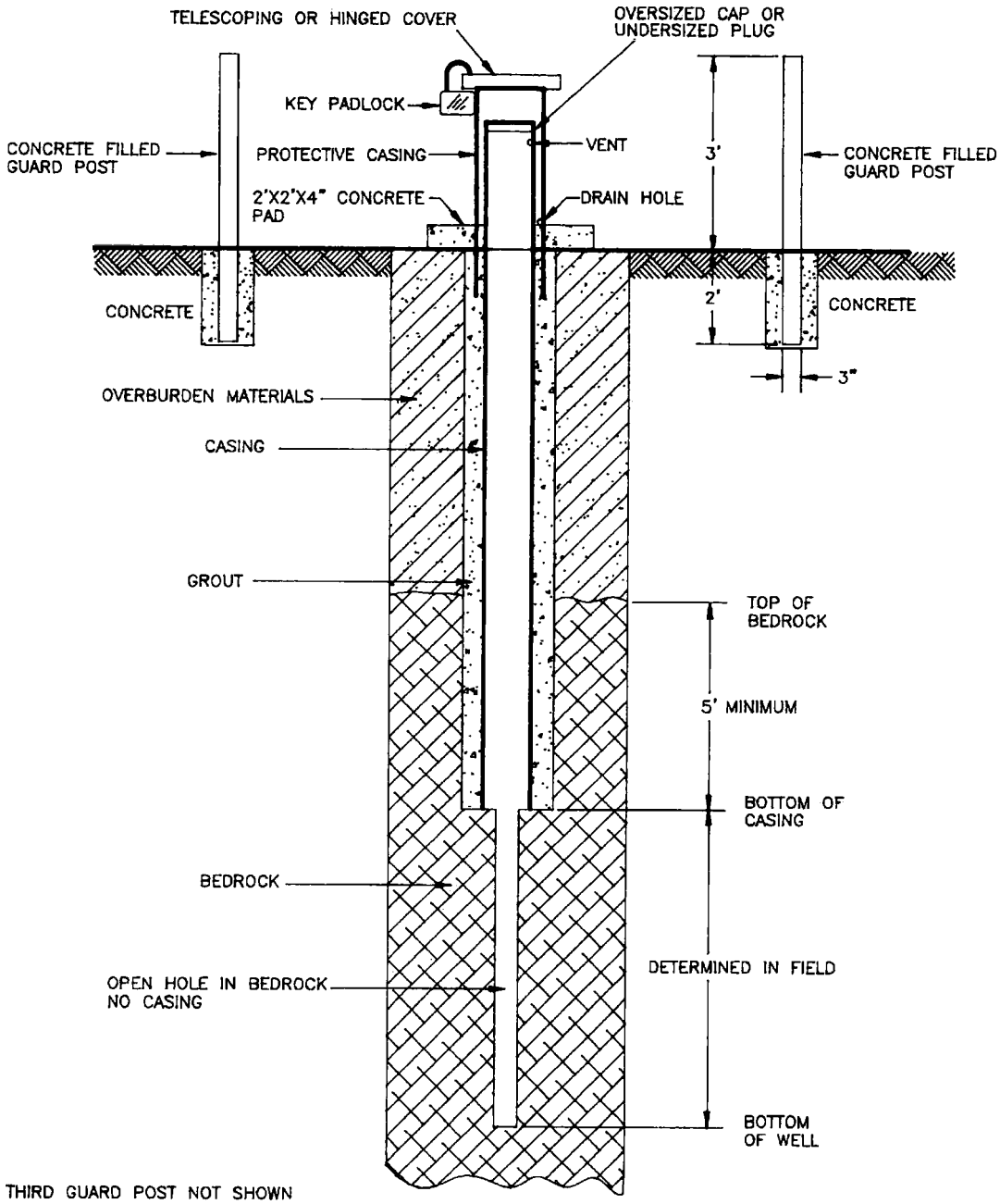

APPENDIX B (Cont'd)

Figures

FIGURE 2. Typical Overburden Well Construction

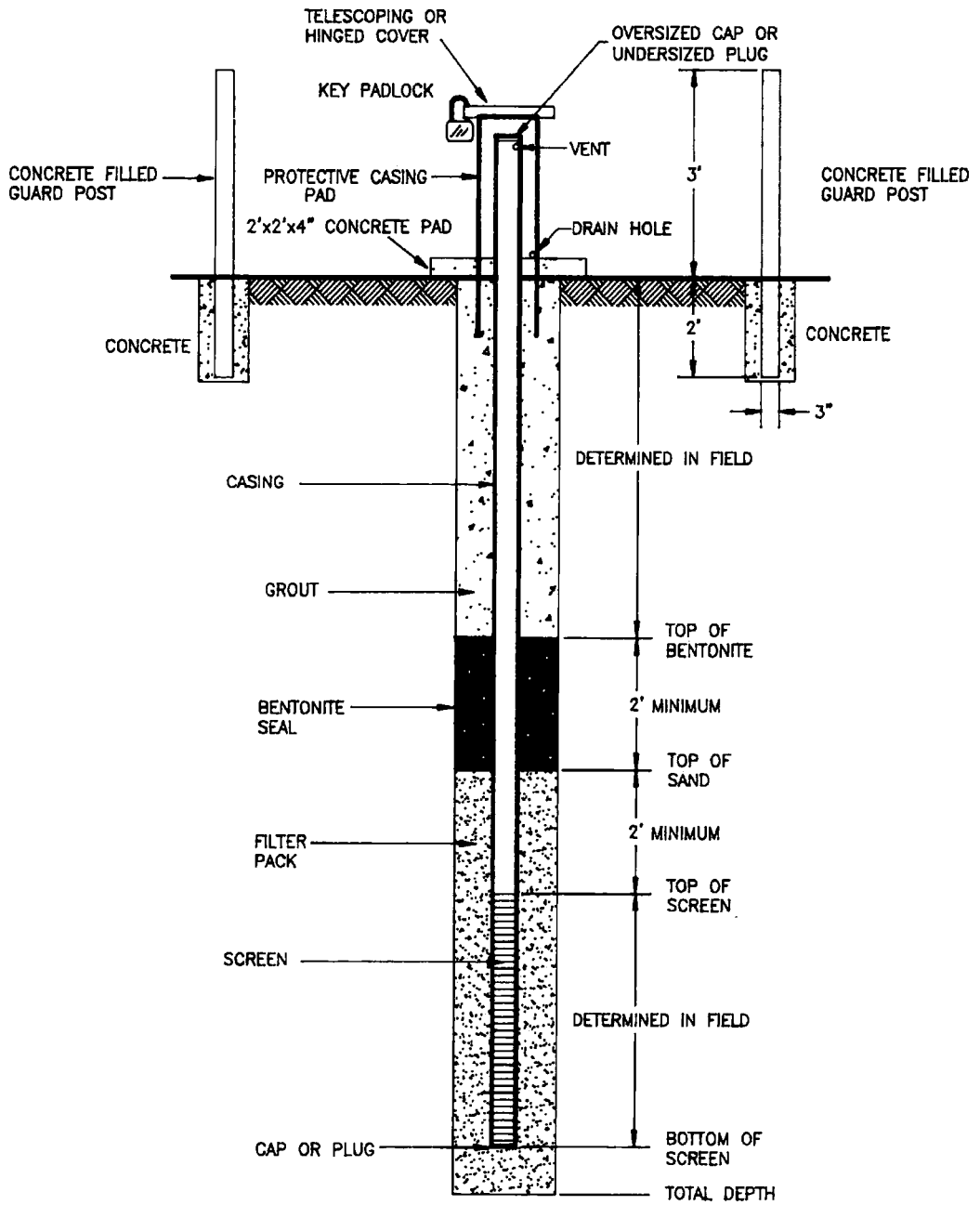

PHOTOIONIZATION DETECTOR (PID) HNU

SOP#: 2114
DATE: 10/06/94
REV. #: 0.0

1.0 SCOPE AND APPLICATION

The purpose of this Standard Operating Procedure (SOP) is to describe the procedure for using a photoionization detector (PID). The PID is a portable, nonspecific, vapor/gas detector employing the principle of photoionization to detect a variety of chemical compounds, both organic and inorganic, in air. This procedure is applicable to the HNU PI-101, HNU ISPI-101, and HW-101 used for air monitoring.

These are standard (i.e., typically applicable) operating procedures which may be varied or changed as required, dependent on site conditions, equipment limitations or limitations imposed by the procedure. In all instances, the ultimate procedures employed should be documented and associated with the final report.

Mention of trade names or commercial products does not constitute U.S. Environmental Protection Agency (U.S. EPA) endorsement or recommendation for use.

2.0 METHOD SUMMARY

The PID is a useful general survey instrument at hazardous waste sites. A PID is capable of detecting and measuring real-time concentrations of many organic and inorganic vapors in air. A PID is similar to a flame ionization detector (FID) in application; however, the PID has somewhat broader capabilities in that it can detect certain inorganic vapors. Conversely, the PID is unable to respond to certain low molecular weight hydrocarbons, such as methane and ethane, that are readily detected by FID instruments.

The PID employs the principle of photoionization. The analyzer will respond to most vapors that have an ionization potential less than or equal to that supplied by the ionization source, which is an ultraviolet (UV) lamp. Photoionization occurs when an atom or molecule absorbs a photon of sufficient energy to release an electron and form a positive ion. This will occur when the ionization potential of the molecule in electron volts (eV) is less than the energy of the photon. The sensor is housed in a probe and consists of a sealed ultraviolet light source that emits photons with an energy level high enough to ionize many trace organics, but not enough to ionize the major components of air (e.g., nitrogen, oxygen, carbon dioxide). The ionization chamber exposed to the light source contains a pair of electrodes, one a bias electrode, and the second the collector electrode. When a positive potential is applied to the bias electrode, an electro-magnetic field is created in the chamber. Ions formed by the adsorption of photons are driven to the collector electrode. The current produced is then measured and the corresponding concentration displayed on a meter, directly, in units above background. Several probes are available for the PID, each having a different eV lamp and a different ionization potential. The selection of the appropriate probe is essential in obtaining useful field results. Though it can be calibrated to a particular compound, the instrument cannot distinguish between detectable compounds in a mixture of gases and, therefore, indicates an integrated response to the mixture.

Three probes, each containing a different UV light source, are available for use with the HNU. Energies are 9.5, 10.2, and 11.7 eV. All three detect many aromatic and large molecular hydrocarbons. The 10.2 eV and 11.7 eV probes, in addition, detect some smaller organic molecules and some halogenated hydrocarbons. The 10.2 eV probe is the most useful for environmental response work, as it is more durable than the 11.7 eV probe and detects more compounds than the 9.5 eV probe.

Gases with ionization potentials near to or less than that of the lamp will be ionized. These gases will thus be detected and measured by the analyzer. Gases with ionization potentials higher than that of the lamp will not be detected. Ionization potentials for various atoms, molecules, and compounds are given in

Table 1 (Appendix A). The ionization potential of the major components of air, oxygen, nitrogen, and carbon dioxide, range from about 12.0 eV to about 15.6 eV and are not ionized by any of the three lamps.

Table 2 (Appendix A) illustrates ionization sensitivities for a large number of individual species when exposed to photons from a 10.2 eV lamp. Applications of each probe are included in Table 3 (Appendix A).

While the primary use of the HNU is as a quantitative instrument, it can also be used to detect certain contaminants, or at least to narrow the range of possibilities. Noting instrument response to a contaminant source with different probes can eliminate some contaminants from consideration. For instance, a compound's ionization potential may be such that the 9.5 eV probe produces no response, but the 10.2 eV and 11.7 eV probes do elicit a response.

3.0 SAMPLE PRESERVATION, CONTAINERS, HANDLING, AND STORAGE

This section is not applicable to this SOP.

4.0 INTERFERENCES AND POTENTIAL PROBLEMS

4.1 PID Instrument Limitations

1. The PID is a nonspecific total vapor detector. It cannot be used to identify unknown substances; it can only roughly quantify them.

2. The PID must be calibrated to a specific compound.

3. The PID does not respond to certain low molecular weight hydrocarbons, such as methane and ethane. In addition, the HNU does not detect a compound if the probe has a lower energy than the compound's ionization potential.

4. Certain toxic gases and vapors, such as carbon tetrachloride and hydrogen cyanide, have high ionization potentials and cannot be detected with a PID.

5. Certain models of PID instruments are not intrinsically safe. The HNU PI-101 and HW-101 are not designed for use in potentially flammable or combustible atmospheres. Therefore, these models should be used in conjunction with a Combustible Gas Indicator. The ISPI-101 is intrinsically safe, however.

6. Electrical power lines or power transformers may cause interference with the instrument and thus cause measurement errors. Static voltage sources such as power lines, radio transmissions, or transformers may also interfere with measurements.

7. High winds and high humidity will affect measurement readings. The HNU may become unusable under foggy or humid conditions. An indication of this is the needle dropping below zero, or a slow constant climb on the read-out dial.

8. The lamp window must be periodically cleaned to ensure ionization of the new compounds by the probe (i.e., new air contaminants).

9. The HNU measures concentrations from about 1-2000 ppm, although the response is not linear over this entire range. For example, if calibrated to benzene, the response is linear from about 0-600 units above background. This means the HNU reads a true concentration of benzene only between 0 and 600. Greater concentrations are detected at a lower level than the true value.

10. This instrument is not to be exposed to precipitation (rain). The units are not designed for this service.

11. Do not use this instrument for head space analysis where liquids can inadvertently be drawn into the probe.

4.2 Regulatory Limitations

Transport of calibration gas cylinders by passenger and cargo aircraft must comply with International Air Transport Association (IATA) Dangerous Goods

Regulations or the U.S. Code of Federal Regulations, 49 CFR Parts 100-177. A typical calibration gas included with a PID is isobutylene. It is classified as a non-flammable gas, UN #1556 and the proper shipping name is Compressed Gas. It must be shipped by cargo aircraft only.

5.0 EQUIPMENT/APPARATUS

The following equipment is required for PID operation:

- C PID (HNU)
- C Operating manual
- C Probes: 9.5 eV, 10.2 eV, or 11.7 eV
- C Battery charger for PID
- C Spare batteries
- C Jeweler's screwdriver for adjustments
- C Tygon tubing
- C NBS traceable calibration gas
- C "T" valve for calibration
- C Field Data Sheets/Site Logbook
- C Intake assembly extension
- C Strap for carrying PID
- C Teflon tubing for downhole measurements
- C Plastic bags for protecting the PID from moisture and dirt

Note: Battery charge status - This instrument may be kept on continuous charge without battery damage.

6.0 REAGENTS

- C Isobutylene standards for calibration
- C Benzene reference standard
- C Methanol for cleaning ionization chamber (GC grade)
- C Mild soap solution for cleaning unit surfaces
- C Specific gas standards when calibrating to a specific compound
- C Light source cleaning compound Cat. No. PA101534-A1 (For use only with 9.5 and 10.2 lamps)

The HNU is calibrated in accordance with the operations manual using isobutylene as the calibration standard. The operations manual may also be referred to for alternate calibration to a specific compound.

7.0 PROCEDURES

7.1 Preparation

Check out and ensure the proper operation of the PID, as appropriate, using the equipment checklist provided in Sections 5.0 and 6.0 and the steps listed below.

7.2 Start-Up Procedures

1. Allow the temperature of the unit to equilibrate to its surrounding. This should take about five minutes.

2. Attach the probe to the read-out unit. Match the alignment key, then twist the connector clockwise until a distinct locking is felt. Make sure the microswitch (red button) is depressed by the locking ring.

3. Turn the FUNCTION switch to the battery check position. Check to ensure that the indicator reads within or beyond the green battery arc on the scale plate. If the indicator is below the green arc, or if the red LED comes on, the battery must be charged prior to using.

4. To zero the instrument, turn the FUNCTION switch to the STANDBY position and rotate the ZERO POTENTIOMETER until the meter reads zero. Wait 15-20 seconds to ensure that the zero adjustment is stable; if not, then readjust.

5. Check to see that the SPAN POTENTIOMETER is set at the appropriate setting for the probe being used (i.e., 9.8 for the 10.2 eV probe, 5.0 for the 11.7 eV probe, 1 for the 9.5 eV probe. Note: The setting may vary based on the intensity of the light source).

6. Set the FUNCTION switch to the desired range (i.e., 0-20, 0-200, 0-2000).

7. Listen for the fan operation to verify fan function.

8. Look for ultraviolet light source in the probe to verify function. Do not look at light source from closer than six inches with unprotected eyes, observe only briefly.

9. Check instrument with an organic point source, such as a magic marker, prior to survey to verify instrument function.

10. Routinely during the day, verify the useful battery life by turning the function switch to BATT and schedule the instrument's use accordingly.

7.3 Field Operation

7.3.1 Field Calibration

1. Follow the start-up procedure in Section 7.2.

2. Set the FUNCTION switch to the range setting which includes the concentration of the calibration gas.

3. Attach a regulator to a disposable cylinder of calibration gas. Connect the regulator to the probe of the HNU with a piece of clean tygon tubing. Open the valve on the regulator.

4. After 15 seconds, the meter reading should equal the response value as indicated on the calibration gas cylinder used. If the reading is within ±15% of the response value, then the instrument can be field calibrated to the response value using the external SPAN ADJUSTMENT control. The SPAN ADJUSTMENT control should be adjusted to a lower setting until the correct reading has been obtained. The lower the number on the SPAN ADJUSTMENT conrol, the greater the instrument sensitivity. If the SPAN ADJUSTMENT control has to be adjusted below a setting of 4.00, the unit should be red-tagged and returned for repairs.

5. If the meter reading is greater than ±15% of the response value of the calibration gas used, then the instrument should be red-tagged and returned for re-calibration.

6. Record the following information in the site logbook: the instrument ID number (U.S. EPA decal or serial number if the instrument is a rental), the initial and final span settings, the date and time, concentration and type of calibration gas used, and the name of the person who field calibrated the instrument.

7. If the PID does not start up, check out, or calibrate properly, the instrument should not be used. Under no circumstances is work requiring air monitoring with a PID to be done without a proper functioning instrument.

8. In some field applications, with the exception of the probe's inlet and exhaust, the PID should be wrapped in clear plastic to prevent it from becoming contaminated and to prevent water from getting inside in the event of precipitation.

7.3.2 Operation

1. All readings are to be recorded in the site logbook. Readings should be recorded, following background readings, as "units above background," not ppm.

2. As with any field instrument, accurate results depend on the operator being completely familiar with the operator's manual. The instructions in the operating manual should be followed explicitly in order to obtain accurate results.

3. Position the probe assembly close to the area to be monitored because the low sampling rate allows for only very localized readings. Under no circumstances should the probe tip assembly be immersed in fluid.

4. While taking care to prevent the PID from being exposed to excessive moisture, dirt, or contamination, monitor the work activity as specified in the site Health and Safety Plan. The PID survey should be conducted at a slow to moderate rate of speed and the intake assembly (the probe) slowly swept from side to side. There is a three to five second delay in read-out depending upon the instruments sensitivity to the contaminant.

5. During drilling activities, PID monitoring is performed at regular intervals downhole, at the headspace, and in the breathing zone. In addition, where elevated organic vapor levels are encountered, monitoring may be performed in the breathing zone during actual drilling. When the activity being monitored is other than drilling, readings should emphasize breathing zone conditions.

6. When the activity is completed or at the end of the day, carefully clean the outside of the PID with a damp disposable towel to remove any visible dirt.

7.4 Post Operation

1. Turn FUNCTION Switch to OFF.

2. Return the PID to a secure area and check the calibration (Section 7.3.1.) before charging. Connect the instrument to charger and plug in the charger. The probe must be connected to the readout unit to charge the HNU.

3. Complete logbook entries, verifying the accuracy of entries and signing/initialing all pages. Following completion of a series of "0" readings, verify the instrument is working as in Section 7.3.1.

4. Check the equipment, repair or replace damaged equipment, and charge the batteries.

7.5 Equipment Calibration

1. Follow the start-up procedure in Section 7.2.

2. Set the FUNCTION switch to the range setting which includes the concentration of the calibration gas.

3. Attach a regulator to a cylinder of calibration gas. Connect the regulator to the probe of the NHU with a piece of clean tygon tubing. Open the valve on the regulator.

4. After 15 seconds, the meter reading should equal the response value as indicated on the calibration gas cylinder used. If the reading is greater than ±15% of the actual concentration, an internal calibration is necessary. Unlock the SPAN POTENTIOMETER dial before adjusting it. Adjust the SPAN POTENTIOMETER to the span setting recommended for the probe being used (i.e., 9.8 for the 10.2 eV probe, 5.0 for the 11.7 eV probe, 1 for the 9.5 eV probe). To calibrate the instrument, unscrew the bottom support screw and lift the instrument out of the case. Locate and adjust the trimpot "R-32" (near the top of the printed circuit board) by inserting a small screwdriver and gently turning. When the instrument gives the correct reading for the calibration gas being used, reassemble it.

5. Record the following information in the calibration logbook: the instrument identification number (U.S. EPA barcode number or serial number if the instrument is a rental), the initial and final span settings, the date and time, concentration and type of calibration gas used, and the name of the person who calibrated the instrument. Affix a sticker to the instrument indicating the person who performed the calibration, the date of calibration, and the due date of the next calibration.

6. Turn the FUNCTION switch to OFF and connect the instrument to the charger. The probe must be connected to the readout unit to ensure that the unit accepts a charge.

8.0 CALCULATIONS

The HNU is a direct reading instrument. Readings are interpreted as units above background rather than ppm.

9.0 QUALITY ASSURANCE/ QUALITY CONTROL

There are no specific quality assurance activities which apply to the implementation of these procedures. However, the following general QA procedures apply:

1. All data must be documented on field data sheets or within site logbooks.

2. All instrumentation must be operated in

accordance with operating instructions as supplied by the manufacturer, unless otherwise specified in the work plan. Equipment checkout and calibration activities must occur prior to sampling/operation, and they must be documented.

10.0 DATA VALIDATION

This section is not applicable to this SOP.

11.0 HEALTH AND SAFETY

When working with potentially hazardous materials, follow U.S. EPA, OSHA, or corporate health and safety practices.

The HNU is certified by OSHA standards for use in Class 1, Division 2, Groups A, B, C, and D locations.

12.0 REFERENCES

HNU Systems, Inc. 1975. "Instruction Manual for Model PI-101 Photoionization Analyzer."

U.S. Code of Federal Regulations, 49 CFR Parts 100 to 177, Transportation, revised November 1, 1985.

U.S. Environmental Protection Agency. 1984. "Characterization of Hazardous Waste Sites - A Methods Manual: Volume II, Available Sampling Methods, Second Edition", EPA-600/4-84-076, Environmental Monitoring Systems Laboratory, Office of Research and Development, Las Vegas, Nevada.

International Air Transport Association Dangerous Goods Regulations

APPENDIX A

Tables

TABLE 1. Ionization Potentials

SOME ATOMS AND SIMPLE MOLECULES

Molecule	IP(Ev)	Molecule	IP (eV)
H	13.595	I_2	9.28
C	11.264	HF	15.77
N	14.54	HCl	12.74
O	13.614	HBr	11.62
Si	8.149	HI	10.38
S	10.357	SO_2	12.34
F	17.42	CO_2	13.79
Cl	13.01	COS	11.18
Br	11.84	CS_2	10.08
I	10.48	N_2O	12.90
H_2	15.426	NO_2	9.78
N_2	15.580	O_3	12.80
O_2	12.075	H_2O	12.59
CO	14.01	H_2S	10.46
CN	15.13	H_2Se	9.88
NO	9.25	H_2Te	9.14
CH	11.1	HCN	13.91
OH	13.18	C_2N_2	13.8
F_2	15.7	NH_3	10.15
Cl_2	11.48	CH_3	9.840
Br_2	10.55	CH_4	12.98

PARAFFINS AND CYCLOPARAFFINS

Molecule	IP (eV)
Methane	12.98
Ethane	11.65
Propane	11.07
n-Butane	10.63
I-Butane	10.57
n-Pentane	10.35
ii-Pentane	10.32
2,2-Dimethylpropane	10.35
n-Hexane	10.18
2-Methylpentane	10.12
3-Methylpentane	10.08
2,2-Dimethylbutane	10.06
2,3-Dimethylbutane	10.02
n-Heptane	10.08
2,2,4-Trimethylpentane	9.86
Cyclopropane	10.06
Cyclopentane	10.53
Cyclohexane	9.88
Methylcyclohexane	9.85

APPENDIX A (Cont'd)

Tables

TABLE 1. Ionization Potentials (Continued)

ALKYL HALIDES

Molecule	IP (eV)	Molecule	IP (eV)
HCl	12.74	1-bromo-2-methylpropane	10.09
Cl_2	11.48	2-bromo-2-methylpropane	9.89
CH_4	12.98	1-bromopentane	10.10
Methyl chloride	11.28	HI	10.38
Dichloromethane	11.35	I_2	9.28
Trichloromethane	11.42	Methyl iodide	9.54
Tetrachloromethane	11.47	Diiodomethane	9.34
Ethyl chloride	10.98	Ethyl iodide	9.33
1,2-Dichloroethane	11.12	1-iodopropane	9.26
1,3-Dichloropropane	10.85	2-iodopropane	9.17
1-chlorobutane	10.67	1-iodobutane	9.21
2-chlorobutane	10.65	2-iodobutane	9.09
1-chloro-2-methylpropane	10.66	1-iodo-2-methylpropane	9.18
2-chloro-2-methylpropane	10.61	2-iodo-2-methylpropane	9.02
HBr	11.62	1-iodopentane	9.19
Br_2	10.55	F_2	15.7
Methyl bromide	10.53	HF	15.77
Dibromomethane	10.49	$CFCl_3$ (Freon 11)	11.77
Tribomomethane	10.51	CF_2Cl_2 (Freon 12)	12.31
CH_2BrCl	10.77	CF_3Cl (Freon 13)	12.91
$CHBr_2Cl$	10.59	$CHClF_2$ (Freon 22)	12.45
Ethyl bromide	10.29	CF_2Br_2	11.67
1,1-dibromoethane	10.19	CH_3CF_2Cl (Genetron 101)	11.98
1-bromo-2-chloroethane	10.63	$CFCl_2CF_2Cl$	11.99
1-bromopropane	10.18	CF_3CCl_3 (Freon 113)	11.78
2-bromopropane	10.075	$CFHBrCH_2Br$	10.75
1,3-dibromopropane	10.07	CF_2BrCH_2Br	10.83
1-bromobutane	10.13	CF_3CH_2I	10.00
2-bromobutane	9.98	$n\text{-}C_3F_7I$	10.36
1-chloropropane	10.82	$n\text{-}C_3F_7CH_2Cl$	11.84
2-chloropropane	10.78	$n\text{-}C_3F_7CH_2I$	9.96
1,2-dichloropropane	10.87	CF_2Br_2	11.07

APPENDIX A (Cont'd)

Tables

TABLE 1. Ionization Potentials (Continued)

ALIPHATIC ALCOHOL, ETHER, THIOL, AND SULFIDES

Molecule	IP (eV)
Water	12.59
Methyl alcohol	10.85
Ethyl alcohol	10.48
n-propyl alcohol	10.20
i-propyl alcohol	10.16
n-butyl alcohol	10.04
Dimethyl ether	10.00
Diemthyl ether	9.53
n-propyl ether	9.27
i-propyl ether	9.20
Hydrogen Sulfide	10.46
Methanethiol	9.440
Ethanethiol	9.285
1-propanethiol	9.195
1-butanethiol	9.14
Dimethyl sulfide	8.685
Ethyl methyl sulfide	8.55
Diethyl sulfide	8.430
di-n-propyl sulfide	8.30

ALIPHATIC ALDEHYDES AND KETONES

Molecule	IP (eV)
Carbon Dioxide	13.79
Formaldehyde	10.87
Acetaldehyde	10.21
Propionaldehyde	9.98
n-butyraldehyde	9.86
Isobutyraldehyde	9.74
n-valeraldehyde	9.82
Isovaleraldehyde	9.71
Acrolein	10.10
Crotonaldehyde	9.73
Benzaldehyde	9.53
Acetone	9.69
Methyl ethyl ketone	9.53
Methyl n-propyl ketone	9.39
Methyl i-propyl ketone	9.32
Diethyl ketone	9.32
Methyl n-butyl ketone	9.34
Methyl i-butyl ketone	9.30
3,3-dimethyl butanone	9.17
2-heptanone	9.33
Cyclopentanone	9.26
Cyclohexanone	9.14
2,3-butanedione	9.23
2,4-pentanedione	8.87

APPENDIX A (Cont'd)

Tables

TABLE 1. Ionization Potentials (Continued)

ALIPHATIC ACIDS AND ESTERS

Molecule	IP (eV)
Carbon Dioxide	13.79
Formic acid	11.05
Acetic acid	10.37
Propionic acid	10.24
n-butyric acid	10.16
Isobutyric acid	10.02
n-valeric acid	10.12
Methyl formate	10.815
Ethyl formate	10.61
n-propyl formate	10.54
n-butyl formate	10.50
Isobutyl formate	10.46
Methyl acetate	10.27
Ethyl acetate	10.11
n-propyl acetate	10.04
Isopropyl acetate	9.99
n-butyl acetate	10.01
Isobutyl acetate	9.97
Sec-butyl acetate	9.91
Methyl propionate	10.15
Ethyl propionate	10.00
Methyl n-butyrate	10.07
Methyl isobutyrate	9.98

ALIPHATIC AMINES AND AMIDES

Molecule	IP (eV)
Ammonia	10.15
Methyl amine	8.97
Ethyl amine	8.86
n-propyl amine	8.78
i-propyl amine	8.72
n-butyl amine	8.71
i-butyl amine	8.70
s-butyl amine	8.70
t-butyl amine	8.64
Dimethyl amine	8.24
Diethyl amine	8.01
Di-n-propyl amine	7.84
Di-i-propyl amine	7.73
Di-n-butyl amine	7.69
Trimethyl amine	7.82
Triethyl amine	7.50
Tri-n-propyl amine	7.23
Formamide	10.25
Acetamide	9.77
N-methyl acetamide	8.90
N,N-dimethyl formamide	9.12
N,N-dimethyl acetamide	8.81
N,N-diethyl formamide	8.89
N,N-diethyl acetamide	8.60

APPENDIX A (Cont'd)

Tables

TABLE 1. Ionization Potentials (Continued)

OTHER ALIPHATIC MOLECULES WITH N ATOM

Molecule	IP (eV)
Nitromethane	11.08
Nitroethane	10.88
1-nitropropane	10.81
2-nitropropane	10.71
HCN	13.91
Acetontrile	12.22
Propiontrile	11.84
n-butyronitrile	11.67
Acrylonitrile	10.91
3-butene-nitrile	10.39
Ethyl nitrate	11.22
Methyl thiocyanate	10.065
Ethyl thiocyanate	9.89
Methyl isothiocyanate	9.25
Ethyl isothiocyanate	9.14

OLEFINS, CYCLO-OLEFINS, ACETYLENES

Molecule	IP (eV)
Ethylene	10.515
Propylene	9.73
1-butene	9.58
2-methylpropene	9.23
Trans-2-butene	9.13
Cis-2-butene	9.13
1-pentene	9.50
2-methyl-1-butene	9.12
3-methyl-1-butene	9.51
3-methyl-2-butene	8.67
1-hexene	9.46
1,3-butadiene	9.07
Isoprene	8.845
Cyclopentene	9.01
Cyclohexene	8.945
4-methylcyclohexene	8.91
4-cinylcylohexene	8.93
Cyclo-octatetraene	7.99
Acetylene	11.41
Propyne	10.36
1-butyne	10.18

APPENDIX A (Cont'd)

Tables

TABLE 1. Ionization Potentials (Continued)

SOME DERIVATIVES OF OLEFINS

Molecule	IP (eV)
Vinyl chloride	9.995
Cis-dichloroethylene	9.65
Trans-dichloroethylene	9.66
Trichloroethylene	9.45
Tetrachloroethylene	9.32
Vinyl bromide	9.80
1,2-dibromoethylene	9.45
tribromoethylene	9.27
3-chloropropene	10.04
2,3-dichloropropene	9.82
1-bromopropene	9.30
3-bromopropene	9.7
$CF_3CCl=CClCF_3$	10.36
$n\text{-}C_5F_{11}CF=CF_2$	10.48
Acrolein	10.10
Crotonaldehyde	9.73
Mesityl oxide	9.08
Vinyl methyl ether	8.93
Allyl alcohol	9.67
Vinyl acetate	9.19

HETEROCYCLIC MOLECULES

Molecule	IP (eV)
Furan	8.89
2-methyl furan	8.39
2-furaldehyde	9.21
Tetrahydrofuran	9.54
Dihydropyran	8.34
Tetrahydropyran	9.26
Thiophene	8.860
2-chlorothiophene	8.68
2-bromothiophene	8.63
Pyrrole	8.20
Pyridine	9.32
2-picoline	9.02
3-picoline	9.04
4-picoline	9.04
2,3-lutidine	8.85
2,4-lutidine	8.85
2,6-lutidine	8.85
Tribromoethylene	9.27

APPENDIX A (Cont'd)

Tables

TABLE 1. Ionization Potentials (Continued)

AROMATIC COMPOUNDS

Molecule	IP (eV)	Molecule	IP (eV)
Benzene	9.245	Phenyl isothiocyanate	8.520
Toluene	8.82	Benzonitrile	9.705
Ethyl benzene	3.76	Nitrobenzene	9.92
n-propyl benzene	8.72	Aniline	7.70
i-propyl benzene	8.69	Fluoro-benzene	9.195
n-butyl benzene	8.69	Chloro-benzene	9.07
s-butyl benzene	8.68	Bromo-benzene	8.98
t-butyl benzene	8.68	Iodo-benzene	8.73
o-xylene	8.56	o-dichlorobenzene	9.07
m-xylene	8.56	m-dichlorobenzene	9.12
p-xylene	8.445	p-dichlorobenzene	8.94
Mesitylene	8.40	1-chloro-2-fluorobenzene	9.155
Durene	8.025	1-chloro-3-fluorobenzene	9.21
Styrene	8.47	1-bromo-4-fluorobenzene	8.99
o-methyl styrene	8.35	o-fluorotoluene	8.915
Ethynylbenzene	8.815	m-fluorotoluene	8.915
Napthalene	8.12	p-fluorotoluene	8.785
1-methylnapthalene	7.69	o-chlorotoluene	8.83
2-methylnapthalene	7.955	m-chlorotoluene	8.83
Biphenyl	8.27	p-chlorotoluene	8.70
Phenol	8.50	o-bromotoluene	8.79
Anisole	8.22	m-bromotoluene	8.81
Phenetole	8.13	p-bromotoluene	8.67
Benzaldehyde	9.53	o-iodotoluene	8.62
Acetophenone	9.27	m-iodotoluene	8.61
Benzenethiol	8.33	p-iodotoluene	8.50
Phenyl isocyanate	8.77	Benzotrifluoride	9.68
		o-fluorophenol	8.66

APPENDIX A (Cont'd)

Tables

TABLE 1. Ionization Potentials (Continued)

MISCELLANEOUS MOLECULES

Molecule	IP (eV)
Ethylene oxide	10.565
Propylene oxide	10.22
p-dioxane	9.13
Dimethoxymethane	10.00
Diethyoxymethane	9.70
1,1-dimethoxyethane	9.65
Propiolactone	9.70
Methyl disulfide	8.46
Ethyl disulfide	8.27
Diethyl sulfite	9.68
Thiolacetic acid	10.00
Acetyl chloride	11.02
Acetyl bromide	10.55
cyclo-$C_6H_{11}CF_3$	10.46
(n-C_3F_7)(CH_3)C=O	10.58
Trichlorovinylsilane	10.79
$(C_2F_5)_3N$	11.7
Isoprene	9.08
Phosgene	11.77

APPENDIX A (Cont'd)

Tables

TABLE 2. Relative Photoionization Sensitivities for Gases

Chemical	Relative Sensitivity	Examples
Aromatic	10	Benzene, Toluene, Styrene
Aliphatic Acid	10	Diethylamine
Chlorinated Unsaturated	5-9	Vinyl Chloride, Vinylidene Chloride, Trichloroethylene
Carbonyl	7-9	MEK, MiBK, Acetone, Cyclohexanone
Unsaturated	3-5	Acrolein, Propylene, Cyclohexanone, Allyl Alcohol
Sulfide	3-5	Hydrogen Sulfide, Methyl Mercaptan
Paraffin (C5-C7)	1-3	Pentane, Hexane, Heptane
Ammonia	0.3	
Paraffin (C1-C4)	0	Methane, Ethane

NOTE: Relative sensitivity = meter reading when measuring 10 ppm of the listed gas with instrument with 10.2 eV probe calibrated for 10 ppm of benzene, span pot setting = 9.8 for direct reading of benzene.

APPENDIX A (Cont'd)

Tables

TABLE 3. Typical Applications of Interchangeable Probes

	Ionization Potentials	Relative Sensitivity	
p-Xylene	8.44	0.10	0.104
p-Chlorotoluene	8.70	0.09	0.112
Toluene	8.82	0.09	0.112
o-Chlorotoluene	8.83	0.075	0.112
Ethyl Acetate	9.19	0.075	0.112
Benzene	9.24	0.10	0.10
Methyl Mercaptan	9.24	0.10	0.072
Pyridine	9.32	0.075	0.122
Allyl Alcohol	9.67	0.10	0.111
Crotonaldehyde	9.88	0.075	0.104
Amyl Alcohol	9.80	0.09	0.116
Cyclohexane	9.88	0.075	0.104
Vinyl Chloride	9.95	0.085	0.112
Butanol	10.94	0.09	0.176
Ammonia	10.15	0.06	0.160
Acetic Acid	10.37	0.04	0.560
Ethylene	10.52	0.0	0.320
Ethylene Oxide	10.56	0.0	0.298

$$\text{Relative sensitivity} = \frac{\text{Response with 9.5 or 11.7 eV probe}}{\text{Response with 10.2 eV probe}}$$

Attachment 2

Laboratory Standard Operating Procedures

ESS Laboratory
Division of Thielsch Engineering
Cranston, RI

SOP NO. 20_5035
Volatile Organic Compounds
by Gas Chromatography/Mass Spectrometry (GC/MS):
Capillary Column Technique
(SW-846 METHOD 5035)

APPROVED BY:

Operations Manager	Date 3/13/9
QA Manager	Date 3/18/09
Laboratory Director	Date 3/13/09

Volatile Organic Compounds by Gas Chromatography/Mass Spectrometry (GC/MS): Capillary Column Technique (SW-846 METHOD 5035)

1.0 SCOPE AND APPLICATION

1.1 This method describes the technique utilized by ESS Laboratory in the qualitative and quantitative analysis of volatile samples based on SW-846 Method 5035. Following are compounds that are currently determined by this method.

Appropriate Technique Analyte	Cas #[b]	Purge-and-Trap	Direct Injection
Acetone	67-64-1	Pp	a
Acrolein (Propenal)	107-02-8	Pp	a
Acrylonitrile	107-13-1	Pp	a
Allyl chloride	107-05-1	a	a
tert- Amyl methyl ether	994-05-8	a	a
Benzene	71-43-2	a	a
Bromobenzene	108-86-1	a	a
Bromochloromethane	74-97-5	a	a
Bromodichloromethane	75-27-4	a	a
4-Bromofluorobenzene	460-00-4	a	a
Bromoform	75-25-2	a	a
Bromomethane	74-83-9	a	a
2-Butanone (MEK)	78-93-3	Pp	a
n-Butylbenzene	104-51-8	a	a
sec-Butylbenzene	135-98-8	a	a
tert-Butylbenzene	98-06-6	a	a
Carbon disulfide	75-15-0	Pp	a
Carbon tetrachloride	56-23-5	a	a
Chlorobenzene	108-90-7	a	a
1-Chlorobutane	109-69-3	a	a
Chlorodibromomethane	124-48-1	a	a
Chloroethane	75-00-3	a	a
2-Chloroethyl vinyl ether	110-75-8	a	a
Chloroform	67-66-3	a	a

ESS Laboratory. This document may be reproduced solely for internal use.

Chloromethane	74-87-3	a	a
Chloroprene	126-99-8	a	a

Appropriate Technique Analyte	Cas #[b]	Purge-and-Trap	Direct Injection
2-Chlorotoluene	95-49-8	a	a
4-Chlorotoluene	106-43-4	a	a
Cyclohexane	110-82-7	a	a
1,2-Dibromo-3-chloropropane	96-12-8	Pp	a
1,2-Dibromoethane	106-93-4	a	a
Dibromomethane	74-95-3	a	a
1,2-Dichlorobenzene	95-50-1	a	a
1,3-Dichlorobenzene	541-73-1	a	a
1,4-Dichlorobenzene	106-46-7	a	a
Cis-1,4-Dichloro-2-butene	1476-11-5	a	a
trans-1,4-Dichloro-2-butene	110-57-6	Pp	a
Dichlorodifluoromethane	75-71-8	a	a
1,1-Dichloroethane	75-34-3	a	a
1,2-Dichloroethane	107-06-2	a	a
1,1-Dichloroethene	75-35-4	a	a
cis-1,2-Dichloroethene	156-59-2	a	a
trans-1,2-Dichloroethene	156-60-5	a	a
1,2-Dichloropropane	78-87-5	a	a
1,3-Dichloropropane	142-28-9	a	a
2,2-Dichloropropane	594-20-7	a	a
1,1-Dichloropropene	563-58-6	a	a
cis-1,3-Dichloropropene	10061-01-5	a	a
trans-1,3-Dichloropropene	10061-02-6	a	a
1,4-Difluorobenzene	540-36-3	a	a
Diethyl Ether	60-29-7	a	a
1,4-Dioxane	123-91-1	Pp	a
Ethylbenzene	100-41-4	a	A
Ethyl methacrylate	97-63-2	a	a
Ethyl tertiary-butyl ether	637-92-3	a	a
Hexachlorobutadiene	87-68-3	a	a
Hexachloroethane	67-72-1	i	a

ESS Laboratory. This document may be reproduced solely for internal use.

2-Hexanone	591-78-6	Pp	a

Appropriate Technique Analyte	Cas #[b]	Purge-and-Trap	Direct Injection
Iodomethane	74-88-4	a	a
Isopropylbenzene	98-82-8	a	a
Di-isopropyl ether	108-20-3	a	a
p-Isopropyltoluene	99-87-6	a	a
Methyl acetate	79-20-9	a	a
Methyl acrylate	96-33-3	a	a
Methylacrylonitrile	126-98-7	pp	a
Methyl Cyclohexane	108-87-2	a	a
Methylene chloride	75-09-2	a	a
Methyl methacrylate	80-62-6	a	a
4-Methyl-2-pentanone (MIBK)	108-10-1	pp	a
Naphthalene	91-20-3	a	a
2-Nitropropane	79-46-9	a	a
Pentachloroethane	76-01-7	i	a
n-Propylbenzene	103-65-1	a	a
Styrene	100-42-5	a	a
1,1,1,2-Tetrachloroethane	630-20-6	a	a
1,1,2,2-Tetrachloroethane	79-34-5	a	a
Tetrachloroethene	127-18-4	a	a
Toluene	108-88-3	a	a
1,2,3-Trichlorobenzene	87-61-6	a	a
1,2,4-Trichlorobenzene	120-82-1	a	a
1,3,5-Trichlorobenzene	108-70-3	a	a
1,1,1-Trichloroethane	71-55-6	a	a
1,1,2-Trichloroethane	79-00-5	a	a
Trichloroethene	79-01-6	a	a
Trichlorofluoromethane	75-69-4	a	a
1,2,3-Trichloropropane	96-18-4	a	a
1,1,2-Trichloro-1,2,2-trifluoroethane	76-13-1	a	a
1,2,4-Trimethylbenzene	95-63-6	a	a
1,3,5-Trimethylbenzene	108-67-8	a	a
Vinyl acetate	108-05-4	a	a
Vinyl chloride	75-01-4	a	a
o-Xylene	95-47-6	a	a
m-Xylene	108-38-3	a	a

ESS Laboratory. This document may be reproduced solely for internal use.

p-Xylene	106-42-3	a	a

a Adequate response by this technique.
b Chemical Abstract Services Registry Number.
i Inappropriate technique for this method
pp Poor purging efficiency results in high MRLs.

1.2 This method is used to determine volatile organic compounds in a solid material. This includes soils, sediments, solid waste and oil samples.

1.3 This method can be used to quantify most volatile organic compounds that have boiling points below 200°C and that are insoluble or slightly soluble in water. Volatile water-soluble compounds can be included in this analytical technique, however, for the more soluble compounds quantitation limits are approximately ten times higher because of poor purging efficiency.

1.4 The quantitation limit of this method for an individual compound is approximately 50 µg/Kg and 5 µg/Kg for the high and low soil/sediment methods, respectively, at 100% solids. The Quantitation limit for aqueous samples is listed in SOP 20_8260B.

2.0 METHOD SUMMARY

2.1 This SOP provides gas chromatographic/mass spectrometric (GC/MS) conditions for the detection of volatile organic compounds.

2.2 This SOP describes a closed system purge and trap procedure for soil/sediment samples.

2.3 This SOP only addresses sample analysis by purge-and-trap according to 5035 with method 8260B as the determinative method.

2.3.1 Purged sample components are trapped in a tube containing suitable sorbent materials.

2.3.2 When purging is complete, the sorbent tube is heated and back-flushed with helium to desorb trapped sample components. The analytes are desorbed directly to a capillary column for analysis.

2.3.3 Wide-bore capillary columns require a jet separator, whereas narrow bore capillary columns can be directly interfaced to the ion source.

2.4 A temperature program is used in the gas chromatograph to separate the organic compounds. Detection is achieved using a mass spectrometer (MS).

2.5 Tentative identifications are obtained by analyzing standards under the same conditions used for samples and comparing resultant GC retention times. Absolute identifications are obtained by comparing the mass spectra of individual compounds to the reference spectra for that compound.

ESS Laboratory. This document may be reproduced solely for internal use.

2.6 Concentrations of the identified components are measured by relating the response produced for that compound to the response produced by a compound that is used as an internal standard.

2.7 Soil samples with a significant moisture content (>10%) that are extracted prior to analysis in a water miscible solvent such as methanol are diluted by the total volume of the solvent/water mixture. There is the potential to underestimate the volatile content of the soil if this ***solvent dilution effect*** is not taken into account. The total mixture volume can only be calculated based on the sample moisture as determined by the % moisture. Total volume is then expressed as V_t in the sample concentration calculation provided in 9.6.1, ESS Laboratory corrects for the solvent dilution effect for all soil/sludge samples. This total solvent/water volume is calculated as follows:

$$\mu L \text{ solvent/water } V_t = \frac{[\text{ml of MeOH} + (\% \text{ moisture} \times \text{g sample})]}{100} \times 1000\ \mu L/ml$$

2.8 Refer to SOP 10.0001, Attachment G, for subsampling procedures.

3.0 HEALTH AND SAFETY

3.1 Each employee has been trained and has acknowledged being trained in the safe use and handling of chemicals being used in the laboratory. This training has been performed according to the ESS Training SOP 80_0016 and by the Chemical Hygiene Plan SOP 90_0001 in conjunction with the Safety orientation

3.2 All sample and material handling should be done in a hood while using proper protective equipment to minimize exposure to liquid or vapor. Minimum personnel protective equipment includes the use of laboratory safety glasses, a lab coat or apron, and protective gloves.

3.3 The MSDSs for the concentrated chemicals used in the laboratory are kept on file in a central location that is available for all employees to review.

4.0 SAMPLE PRESERVATION, CONTAINERS, HANDLING AND STORAGE

4.1 **Low Level Method**: Sample vials will be provided by the laboratory and will contain 1 magnetic stir bar and 5 ml de-ionized water. A minimum of 2 vials must be submitted per sample. Vials will be pre-weighed by the laboratory (see bottle prep procedure Attachments C and D). Before GC/MS analysis, the sample vial will be re-weighed and the final soil weight will be calculated. Samples must be received within 48 hours of collection and frozen at receipt (<7°C). Store sample vials at a slant to avoid breaking vials.

4.2 **High Level Method**: Sample vials will be provided by the laboratory and will contain 15ml of methanol (purge and trap grade) as preservative. Vials will be pre-weighed by the laboratory and a scribed mark will be made indicating the level the methanol should be when 15g of soil is added to the container. Before GC/MS analysis, the sample vial will be re-weighed and the final soil weight will be calculated (see Attachments E and F). Samples extracted in Methanol are stored in a refrigerator at 4 ± 2°C within the laboratory.

ESS Laboratory. This document may be reproduced solely for internal use.

4.3 **The Encore® sample collection, storage and preparation procedure** is described in Attachment J.

4.4 Samples for analysis using this SOP must be stored in tightly sealed vials with Teflon-lined silicone septum seals in which the original sample was collected. See sample storage SOP 10_0002.

4.5 Samples known to contain high concentrations of VOCs are stored in a separate refrigerator located in the sample storage room. This is to prevent cross contamination.

4.6 Samples for volatile analysis must be analyzed within 14 days of sample collection.

4.7 Glassware is prepared for use by placing in 105°C oven overnight to ensure that there is no solvent contamination.

4.8 Low-level method trip blanks are prepared with 5ml organic free water. This water comes from a carbon filtration system located in the VOA lab and is periodically checked for low level VOCs. High-level method trip blanks are prepared using 15ml of purge and trap grade methanol.

4.9 A trip blank must accompany each batch of 20 or less VOC samples. This trip blank must accompany the associated samples at all times.

4.10 Refrigerator blanks are prepared like trip blanks and stored in the refrigerator with samples. These blanks are analyzed weekly to check for possible cross contamination from samples. To prevent cross contamination from sample to sample, all sample containers must be airtight. If the blank is greater than the MRL, then notify operations manager immediately.

5.0 INTERFERENCES AND POTENTIAL PROBLEMS

5.1 Major sources of contamination are volatile materials in the laboratory and impurities in the inert purging gas and in the sorbent trap. The use of non-polytetrafluoroethylene (PTFE) thread sealant, plastic tubing, or flow controllers with rubber components should be avoided since such materials out-gas organic compounds which will be concentrated in the trap during the purge operation.

5.2 Analyses of reagent blanks provide information about the presence of contaminants. When potential interfering peaks are noted in blanks, the analyst should change the purge gas source. Subtracting blank values from sample results **is not** permitted.

5.3 Interfering contamination may occur when a sample containing low concentrations of volatile organic compounds is analyzed immediately after a sample containing high concentrations of volatile organic compounds. After analysis of a sample containing high concentrations of volatile organic compounds, one or more instrument blanks must be analyzed to check for cross contamination.

5.3.1 This interference may be prevented by rinsing the purging apparatus and sample syringes with portions of organic-free reagent water between samples.

ESS Laboratory. This document may be reproduced solely for internal use.

5.3.2 In extreme situations, the whole purge and trap device may require dismantling and cleaning.

5.4 Special precautions must be taken to avoid contamination when analyzing for methylene chloride. The analytical and sample storage area must be isolated from all atmospheric sources of methylene chloride. Otherwise, random background levels will result. Since methylene chloride will permeate through PTFE tubing, all gas chromatography carrier gas lines and purge gas plumbing must be constructed from stainless steel or copper tubing. Laboratory clothing worn by the analyst should be clean since clothing previously exposed to methylene chloride fumes during liquid/liquid extraction procedures can contribute to sample contamination.

5.5 Samples can be contaminated by diffusion of volatile organics (particularly methylene chloride and fluorocarbons) through the septum seal into the sample during shipment and storage. A trip blank prepared from organic-free reagent water and carried through the sampling and handling protocol can serve as a check on such contamination.

5.6 This procedure can be used to quantitate most volatile organic compounds that have boiling points below 200°C and that are insoluble or slightly soluble in water. Volatile water-soluble compounds can be included in this analytical technique. However, for the more soluble compounds, quantitation limits are approximately ten times higher because of poor purging efficiency. Such compounds include low-molecular-weight-halogenated hydrocarbons, aromatics, ketones, nitriles, acetates, acrylates, ethers and sulfides.

6.0 EQUIPMENT/APPARATUS

6.1 **Microsyringes**: 10 µL, 25 µL, 50 µL, 100 µL, 250 µL, 500 µL, and 1,000 µL. These syringes should be equipped with a 20 gage (0.006" ID) needle.

6.2 **Disposable micropipettes**: 10, 50, 100 and 200 µL volumes. Purchased from Drummond.

6.3 **Syringe**: 5 ml and 25 ml glass, gas-tight, with Luerlock tip.

6.4 **Balance**: Top-loading balance capable of weighing 0.1 g.

6.5 **Micro-reaction vessels**: 1.0 ml and 5.0 ml purchased from Supelco. Catalogue No. 3-3293 with Mininert Caps. Clean reaction vessels by placing in oven at 105°C overnight.

6.6 **Volumetric flasks**: of various sizes with ground glass stoppers.

6.7 **Vials**: 40 ml, with pierceable Teflon screw cap top.

6.8 **Spatulas**: Stainless steel.

6.9 **Disposable pipettes**: Pasteur.

ESS Laboratory. This document may be reproduced solely for internal use.

6.10 **Magnetic Stir Bars:** VWR brand cat no. 58948-116

6.11 **Purge and trap devices**: (A) Tekmar 3100, Stratum Purge and Trap Concentrator. (B) Archon Auto-Sampler System (Varian)

6.11.1 The Archon Auto-sampler is designed to automate the tedious sample handling procedures associated with purge and trap analyses for volatile organic compounds (VOCs) under current EPA methods. The Archon can be used for drinking water, wastewater, soil and solid analyses.

Function Keys: A) **Method**: Methods are entered using a keypad with LCD Screen. All information can be edited using keypad. Settings are variable dependent on analysis requirements

Method parameters consist of:

Sample Type (water/soil)	soil (Low level)	water/soil (High level)
First Vial (1-51)	variable	variable
Last Vial (1-51)	variable	variable
Sample Volume (0-25ml)	05	05
Dilution Factor	variable	variable
Rinse Volume (0-25ml)	--	07
# Rinses (0-20)	--	01
Standard 1(yes/no)	variable	variable
Standard 2(yes/no)	variable	variable
S. Preheat Stir(yes/no)	no	no
Stir(yes/no)	yes	no
W. Stir Time(0-9.9min)	0.0	0.0
W. Settle Time(0-99sec)	0.0	0.0
Syringe Flush(0-20)	00	01
Preheat(yes/no)	yes	no
Preheat Temp(amb-140C)	40	--
Preheat Time(0-99.9min)	1.0	--
Purge Time(0-999.9min)	11	--
Desorb Time(0-99.9min)	1.0	1.0
Operation Mode(Local/Remote)	Remote	Remote
Cycle Timer(0-99.9min)	0.0	0.0
Aux Timer(0-999min)	0.0	0.0
Link to Method	variable	variable

B) **Auto**: Starts purge sequence. Initiates single blank runs.
Single blank runs can be programmed after specific sample vials within a particular method. These method blanks allow the cleaning of not only the Archon, but also the purge and trap and GC. The blank water is withdrawn from the blank water reservoir, which is pressurized by helium gas at 20-25PSI. Before changing the blank reservoir, the "Blank Water Reservoir and Standard Helium" switch must be turned off. This switch is located on the right rear panel inside the Archon. After refilling the reservoir, this switch must be turned on.

ESS Laboratory. This document may be reproduced solely for internal use.
MASTER

C) **Manual**: allows for manual injection of samples.

D) **Flush**: allows flushing of Archon components using water from Blank Water Reservoir.

E) **System**: provides access to all settings, maintenance, calibration, and options of the Archon.

F) **Pause/Stop**: allows analyst to pause or abort sequence.

6.11.2 The sample is purged in a 40 ml VOA vial by the Archon for the Low Level analysis. The sample is purged in a 5 ml sparge tube for the high level analysis. The purge gas passes through the water column as finely divided bubbles, each with a diameter of less than 3 mm at the origin. The purge gas is introduced no more than 5 mm from the base of the water column.

6.11.3 The trap is at least 25 cm long and has an inside diameter of at least 0.105". This trap is commercially available from Supelco (Vocarb 3000, Catalogue No. 2-1066 for system A and No. 2-4920 for system B).

6.11.4 The desorber is capable of rapidly heating the trap to 265°C and performing the bake out step at 265°C.

6.11.5 The chamber heater is capable of maintaining the purge device at 40°C ±1°C.

6.12 **Gas chromatograph**: HP5890 Series II or HP-6890. A complete analytical system with a temperature programmable gas chromatograph suitable for on-column injection and all required accessories including syringes, analytical columns and gases.

6.13 **Column**: 60M x 0.25 mm ID DBVRX, commercially available from J&W Scientific (or equivalent).

6.14 **Mass spectrometer**: HP5971MSD or HP5972MSD or Agilent 5975MSD, which are capable of scanning from 35 to 260 AMU every 1 second or less, utilizing 70 volts electron energy in the electron impact ionization mode and producing a mass spectrum which meets all the criteria listed in section 11.1 when 50 ng of 4-Bromofluorobenzene (BFB) is injected through the gas chromatograph inlet.

6.15 **Data system**:

6.15.1 **Computers:** The VOA Dept. uses three GC/MS systems for method 5035/ 8260B. VOA MS1 has an AST CPU with a Win 95 operating system (OS). VOA MS3 and MS4 have DELL CPUs with Win NT operating systems. VOA MS5 has a Lenovo CPU with a Win XP OS. All computer systems are networked to a Windows 2012 R2 server, which is the destination for all files.Full/Differential/Incremental backups: Daily backups are incremental, weekly backups are differential, and monthly backups are full. We keep daily backups for 7 days, weekly backups for 7 weeks and monthly backups indefinitely.

MASTER

ESS Laboratory. This document may be reproduced solely for internal use.

6.15.2 **Software:** HP Enviroquant MSChemstation - The software is interfaced to the mass spectrometer detector and allows the continuous acquisition and storage on machine-readable media of all mass spectra obtained throughout the duration of the chromatographic program. The computer software allows searching of any GC/MS data file for ions of a specified mass and plotting such ion abundance versus time or scan number. This type of plot is defined as an Extracted Ion Current Profile (EICP). The software is also capable of integrating the abundance in any EICP between specified time or scan number limits. The most current version of the EPA/NIST Mass Spectral Library is also available. Current versions VOA MS1:G1032C version C.01.00, VOA MS3:G1701BA Version B.01.00, VOA MS4: G1701AA version A.03.00 and VOA MS5: E.02.00.493.

7.0 REAGENTS AND STANDARDS

7.1 Reagents:

7.1.1 **Methanol**: Purge and Trap grade, purchased from Fisher, Catalog No.A453-500 or equivalent.

7.1.2 **Reagent Water**: Water in which interference is not observed at the method detection limits (MDL) of the parameters of interest. Tap water, which has been passed through activated carbon (12-20) mesh, meets the above criteria. Note: activated carbon purchased from Aldrich (cat. # 24,224-1).

7.2 Standards:

7.2.1 **Primary Standards**: obtained from a commercial source. Store in the freezer at -10°C to -20°C. After opening; store in a vial with a mininert valve. All Certificates of Analysis (COAs) are to be marked with the appropriate Primary Standard ID and recorded in the primary standard logbook. Primary standards are not to be used after the manufacturer's expiration date. Once a standard has been opened, it may not be used after 2 months. Gas mixtures are to be regularly monitored for degradation. A copy of the (COAs), which details the compounds found in the mixes, is attached.

Manufacturer	Standard	Catalog Number	Conc. (µg/ml)
Restek	Ketones	30006	5000
Restek	Acrolein	30645	5000
Restek	Oxygenates	30465	2000/10,000 (TBA)
Restek	Custom	558360	2000
Restek	Gases	30042-510	2000
Restek	Cal Mix#1	30633	2000
Restek	2-CEVE	30265	2000
Restek	Vinyl Acetate	30216	2000
Accustandard	1,4-Dioxane	ALR-062N	10,000*
Ultra	Surrogate	STM-530-1	2500
Accustandard	1,3,5-Trichlorobenzene	AS-E0176	5000

*The primary standard for 1,4-Dioxane is made up from neat by diluting 10 µL of neat 1,4-Dioxane into a 1.0 ml volumetric flask.

ESS Laboratory. This document may be reproduced solely for internal use.
MASTER

7.2.2 **Working Calibration Standard**: The working calibration standard is prepared and stored in micro reaction vessels or vials capped with mininert valves. It is also checked frequently for signs of degradation and evaporation. Working calibration standards expire after 2 months. This standard is used for preparing calibration curves and daily continuing calibrations.

7.2.2.1 **High Level and Low Level Method**: Into a 5 ml volumetric flask, add the following: 125 µL of Ketone standard and 62.5 µL each of gas, Custom standard, Cal Mix #1, Vinyl acetate, and Oxygenate standards, 312.5 µL of 2-CEVE standard, 25µL of Acrolein std, 25µL of 1,3,5-Trichlorobenzene, 237.5 µL 1,4-Dioxane and 50 µL of surrogate standard. Volumize to 5ml with MeOH. Final concentration equals 125 µg/ml for the Ketones and 2-CEVE, 500 µg/ml of 1,4-Dioxane, and 25 µg/ml for all other analytes including surrogates.

7.2.3 **Secondary Source/BS/Matrix Spike Standards**: obtained from a commercial source. They are stored in the freezer at -10°C to -20°C. After opening; they are stored in a vial with a mininert valve.

Manufacturer	Standard	Catalog Number	Conc. (µg/ml)
Accustandard	TCL Ketone Mix	CLP-022K-25x	5000
Supelco	Acrolein	4S-8501	10,000*
Accustandard	Method 502.2 VOC	M-502-10x	2000
Ultra	VOC Mix	DWm-592-1	2000
Ultra	Custom Std	CUS-10604	2000
Accustandard	2-CEVE	M-601C-10x	2000
Supelco	Vinyl acetate	4-0327	5000
Ultra	1,4-Dioxane	RCC-180	10,000*
Accustandard	tert-Butyl Alcohol	S-410	2000

* The primary standard for 1,4-Dioxane and Acrolein is made up by diluting 10 µL of neat 1,4-Dioxane, Acrolein, into a 1.0 ml volumetric flask.

7.2.3.1 **Initial Calibration Verification Standard (ICV)/Blank Spike (BS)/Matrix Spike (MS) Standard (High Level Method):** Used to check the primary standard. Into 5ml volumetric flask containing approximately 3 ml of MeOH add 62.5 µl each of Custom standard, VOC mix, 502.2 Mix and Vinyl acetate; 12.5 µL of Acrolein, and 250 µL of 1,4-Dioxane. Add 100 µL Ketone Mix. Add 312.5 µL tert-Butyl Alcohol and 2-CEVE, Volumize to 5ml with MeOH. Individual components will have a final concentration of 25 µg/ml with the exception of 1,4-Dioxane at 500µg/ml, 2-CEVE and Ketones at 125 µg/ml. A copy of the COAs, which details the compounds in the mixes, is attached.

7.2.4 **Surrogate Standards**: The surrogate solution contains Dibromofluoromethane, Toluene-d_8, 4- Bromofluorobenzene, and 1,2-Dichloroethane-d_4. The mixed stock surrogate solution is purchased from Ultra at 2500 µg/ml (cat. no. STM-530-1). The stock solution is logged into the primary standard logbook upon receipt. Two surrogate standard solutions are prepared from the stock at different concentrations in methanol.

ESS Laboratory. This document may be reproduced solely for internal use.
MASTER

7.2.4.1 **Low level analysis- Surrogate/Internal standard QC mix**: This solution is prepared by adding 500 µL from the stock surrogate (7.2.4) and stock internal standard (7.2.5) to a 5 ml volumetric flask containing methanol and diluting to give a final concentration of 250 µg/ml. Transfer this standard to reservoir #1 on the Archon. For the low-level method, addition of 1 µL of this standard by the Archon auto-sampler to 10 ml of DI Water is equivalent to 25 ppb.

7.2.4.2 **High level analysis**- surrogates from the primary standard are added directly to the methanol extract. 30 µL of the primary surrogate standard is spiked into 15 ml of methanol. (60 µL is used if the sample vial contains 30 ml of methanol.

7.2.5 **Internal Standards**: The internal standard solution is purchased from Restek at 2,500 µg/ml (cat no. 30074) and contains Pentafluorobenzene, Chlorobenzene-d_5, and 1,4-Dichlorobenzene-d_4. Two internal standard solutions are prepared from the stock standard at different concentrations in methanol.

7.2.5.1 **Internal Standard QC mix**: This solution is prepared by adding 250 µL from the stock Internal Standard to a 5 ml volumetric flask containing methanol. When brought to volume with methanol the final concentration is 125 µg/ml. Transfer the solution to reservoir 1 on the Archon. Addition of 1µL of this standard by the Archon auto-sampler to 5.0 ml sample is equivalent to 25 ppb.

7.2.5.2 **Internal Standard for calibration:**

7.2.5.2.1 **Low Level Method/ High Level Method**: Add 50µL of the stock solution (7.2.5) to the 5ml of methanol in a 5 ml volumetric flask to give a concentration of 25µg/ml of each internal standard compound. Addition of 10µL of this standard to 10.0 ml of organic free water is equivalent to 25ppb.

7.2.6 **4-Bromofluorobenzene (BFB) Standard**: A stock solution in methanol is purchased from Supelco at a concentration of 2,000 µg/ml (cat. no. 4-8083).

7.2.6.1 Add 62.5µL of the stock solution to a 5.0-ml volumetric flask and dilute with methanol to produce a 25-µg/ml solution. The tuning solution is purged by the Archon by adding 10µL to 10ml organic free water for a final concentration of 25 µg/L.

7.2.7 **Matrix Spiking Standard**: prepared as in section 7.2.3.1.

7.2.7.1 **Low Level MS/MSD,** 10 µl of the matrix spike solution added to the vial. Final spike concentration is 25 µg/L.

MASTER

ESS Laboratory. This document may be reproduced solely for internal use.

7.2.7.2 **High Level MS/MSD**, 40 µl of the matrix spike solution is added to 100 ml of DI water containing 0.5 ml of sample extract. Transfer to two 40 ml vials for the MS and MSD. Final spike concentration is 10 µg/L. See attachment H for MCP requested MS/MSD.

8.0 PROCEDURE

8.1 Initial calibration:

8.1.1 ESS Laboratory's policy is that the audit trail on the Chemstation/Enviroquant software is always on. This ensures that any changes made to the instrument operating method be documented through the audit trail.

8.1.2 GC/MS operating conditions: The following parameters are setup through Hewlett Packard MS EnviroQuant. A copy of an EnviroQuant method is attached.

Electron energy:	70 volts		
Mass range:	35 amu - 260 amu		
Scan time:	1.5 sec/scan		
Initial column temp..:	35°C - 37°C		
Initial column hold time:	1.2 min.		
Column temp. program:	Rate	Final Temp	Final Time
Level 1	9°C/Min	150°C	0 min
Level 2	35°C/Min	220°C	2 min
Injector temperature:	200°C		
Transfer line temperature:	280°C		
Carrier gas (Helium):	15 cm^3/ml		

8.1.3 Assemble a purge-and-trap device that meets the specification in Section 6.11. New traps are conditioned one hour at 270°C in the bake mode. Prior to daily use bake trap for 8 minutes at 265°C.

8.1.4 Just prior to any analysis of samples or standards, the run logbook should be completely filled out (See Attachment A). Each instrument has its own run logbook. Any unusual observations are included in the comment section of the logbook. The information that must be recorded is:

8.1.4.1 **Batch Date**: Date analytical sequence set-up

8.1.4.2 **Vial #**: Position the standard/sample vial is placed in the auto-sampler

8.1.4.3 **File #**: File ID assigned to standard/sample in sequence

8.1.4.4 **Lab ID**: The ID of the sample or standard. Sample IDs are assigned at log-in by ELEMENT (ex: 0508001) and Batch QC samples contain the batch ID (ex BG50801-blk1, BG50801-bs1, BG50801-bsd1, ...)

Uncontrolled Document MASTER
ESS Laboratory. This document may be reproduced solely for internal use.

8.1.4.5 **Method**: Record the method used. The method includes instrument operating parameters and initial calibration for quantitation.

8.1.4.6 **Comments/Dilution/Standard ID**: Record comments and unusual observations. Record any dilution information in the comments section. (Ex. 25x dilution on aqueous sample: 0.2/5 ml) Record standard/spike ID for Tune, CCV, BS/BSD, and MS/MSD.

8.1.4.7 **Analyst**: Analyst must record their initials.

8.1.5 A tune check must be performed before the initial calibration curve. This is accomplished by purging a 25 µg/L standard of the 4-Bromofluorobenzene standard (See section 7.2.6). Analysis is not to begin until the 4-BFB spectra meets the criteria in Section 11.1. Evaluation of the ion abundance is performed by using one of the following scan scenarios:

- Use one scan at the peak apex,
- Use the one scan either directly preceding or following the apex,
- Use the mean of the apex and the scans preceding and following the scan, or
- Use the average across the entire peak.

8.1.5.1 The analysis of all calibration standards must be accomplished within 12 hours of this tune check.

8.1.6 Prepare the standards for generating the calibration curve using the Working Standards (see section 7.2.2) and Internal Standard solution (see Section 7.2.5) as follows:

8.1.6.1 **For the Low Level Soil Method:** Initial calibration standards are prepared in VOA vials containing a magnetic stir bar. Seven standards are analyzed at concentrations of 1.0, 2.0, 5.0, 10, 25, 50, and 100 ppb. The 1.0, 2.0, 5, 10, 25, 50, and 100 standards are prepared by adding 0.4, 0.8, 2.0, 4.0, 10.0, 20.0 and 40.0µL of working calibration standard (§ 7.2.2.2) to 10ml of water. 10µL of internal standard is added to each standard for a final concentration of 25ppb. The vials are capped, heated to 40°C and purged by the Archon auto-sampler.

8.1.6.2 **High Level Calibration Curve**: Initial calibration standards are prepared in 50 ml volumetric flasks. Eight standards are analyzed at concentrations of 0.4, 0.5, 1.0, 5.0, 10, 25, 50, and 100ppb. The 0.4 ppb standard is prepared by adding 0.8 µL of 25 ppm working calibration standard to 50 ml water. The 1.0, 5.0, 10, 25, 50, and 100-ppb standards are made by adding 2.0, 10.0, 20, 50, 100, and 200 µL of 25 ppm working calibration standard (§ 7.2.2.2) to 50ml of water. The 0.5 ppb standard is prepared by adding 1 µL of 25 ppm working standard to 50 ml of DI water. After bringing calibration standards to volume with DI water, invert 3 times, and transfer to 40 ml VOA vials. The standards are purged according to method 5030B.

ESS Laboratory. This document may be reproduced solely for internal use.
MASTER

NOTE: 50 µL of Internal Standard (7.2.5.2) is added to each calibration standard, for a final concentration of 25 ppb.

8.1.7 Carry out the purge-and-trap analysis procedure as described in Section 8.3.

8.1.8 EnviroQuant will tabulate the area response of the characteristic ions (see Table 2) against concentration for each compound and internal standard. It will also calculate response factors (RF) for each compound relative to its internal standards according to the calculations in Section 9.1.

NOTE: EnviroQuant software calculates and reports response factors for the analyst. It is each analyst's responsibility to become familiar with the software by reading the available manuals. **After generating the initial calibration curve in Enviroquant, the analyst must visually check that each calibration standard was entered into the new calibration method. This is accomplished by checking that the area response for one compound from each calibration standard's printout corresponds to the area count listed in the calibration method in Enviroquant.** All of the analytes along with their retention times and the ions used for qualitative analysis are listed in attached method.

8.1.9 The average RF is calculated in the EnviroQuant Method for each compound. A system performance check is made before this calibration curve is used. Five compounds (System Performance Check Compounds or SPCCs) are checked for a minimum average response factor. The minimum acceptable RFs are 0.1 for Chloromethane, 1,1-Dichloroethane, and Bromoform, and 0.3 for Chlorobenzene and 1,1,2,2-Tetrachloroethane. These compounds are used to check compound instability and to check for degradation of the system, such as active sites in transfer lines or trap failure. ***NOTE: The minimum response factor for each compound should not be less than 0.01. ESS Laboratory has found that the following poor performing compounds do not meet this criterion: Acetone, 2-Butanone (MEK), and 1,4-Dioxane.***

8.1.10 Using the RFs from the initial calibration, EnviroQuant software calculates the percent relative standard deviation (%RSD) for all compounds using the equation in Section 9.2. The %RSD should be less than 15% for each compound, except for the following continuing calibration compounds (CCCs) 1,1-Dichloroethene, Chloroform, 1,2-Dichloropropane, Toluene, Ethylbenzene and Vinyl Chloride, where the %RSD should be less than 30%

8.1.10.1 Linearity - If the %RSD of any compound is 15% or less, then the relative response factor is assumed to be constant over the calibration range, and the average relative response factor may be used for quantitation.

8.1.10.2 When the RSD exceeds 15%, the plot and/or visual inspection of the calibration data can be a useful diagnostic tool. The inspection may indicate analytical problems, including errors in standards preparation, the presence of active sites in the chromatographic system, analytes that exhibit poor chromatographic behavior, etc.

ESS Laboratory. This document may be reproduced solely for internal use.
MASTER

8.1.10.3 If a %RSD greater than 30 percent is measured for any method analyte (50% for poor purgers), then corrective action to eliminate a system leak and/or column reactive sites is required before re-attempting calibration. See Section 1 for poor purgers.

8.1.10.4 If the RSD of ANY compound exceeds 15% (never to exceed 30% except for poor purgers), then one of the following options must be applied to the GC/MS initial calibration in this situation or a new initial calibration must be performed.

8.1.10.4.1 Adjust the instrument and/or perform instrument maintenance until the RSD of the calibration meets the 15% QC limit. This option would apply in those instances where a linear instrument response is expected.

8.1.10.4.2 Narrow the calibration range until the response is linear. If the low standard is below the estimated quantitation limit (i.e., for the poor purgers in a commercially available prepared standard mix), then this standard may be dropped. Recalculate the RSD without this standard to see if the RSD meets the QC limit.

8.1.10.4.3 Use a linear calibration. This would be achieved by performing a linear regression of the instrument response versus the concentration of the standards, **do not** force the curve through zero. In order to be used for quantitative purposes, the Correlation of Determination (COD/R^2) must be greater than or equal to 0.99.

8.1.10.4.4 Use a calibration curve or non-linear calibration model. This option should be used only after exhausting the other three options, or in situations where the analyst knows that the instrument response does not follow a linear model over a sufficiently wide working range. Correlation of Determination (COD/R^2) must be greater than or equal to 0.99. ***When non-linear calibration is employed a minimum of six calibration points must be used for second order and seven calibration points for third order.***

8.1.11 Immediately after generating the initial calibration, a second source calibration verification standard (§ 7.2.3.1) must be analyzed to confirm the initial calibration. The percent difference for the CCC analytes must be within 20% (30% for all other target analytes).

8.1.12 The RRT's are established from the 25 ppb mid-point standard in the initial calibration

ESS Laboratory. This document may be reproduced solely for internal use.
MASTER

8.2 **Daily GC/MS analysis**: Just prior to all samples and standard analysis, the run logs are filled out according to 8.1.4.

8.2.1 Prior to the analysis of samples, purge a 25 µg/L standard of the 4-Bromofluorobenzene (Section 7.2.6). The resultant mass spectra for BFB must meet all of the criteria in Section 11.1 before sample analysis begins. This criteria must be met each 12-hour shift.

8.2.2 The initial calibration curve must be verified each 12-hour shift. This is accomplished by analyzing a continuing calibration verification standard (CCV) at **25 µg/L for both high and low level soil analyses**. Determine that the SPCC meet criteria from Section 8.1.9 and the CCCs listed in Section 8.1.10 have %Drift/Deviation less than 20% with all other analytes having a % Drift/Deviation less than 30%. Compounds not analyzed for in the batch of samples do not need to meet the criteria. Continuing calibrations used for 8021 analysis must have <20% Drift/Deviation.
For compounds analyzed for 624 continuing calibration criteria are met or exceeded by 8260 criteria. **Refer to Attachment K for Mass. DEP MCP requirements.**

8.2.3 The internal standard responses and retention times in the continuing calibration standard (CCV) should be evaluated immediately after data acquisition. If the area for any of the internal standards changes by a factor of two (-50% to +100%) or the retention time changes by ±0.5 minutes from the **mid-point standard of the initial calibration**, the mass spectrometer should be checked for defects. The relative retention time of each compound in each calibration run must agree to within 0.06 Relative Retention Time (RRT) Units. The RRT's in the continuing calibration standard is compared to the RRT's from the 25 ppb standard in the ICAL. Analysis is not to continue until problem has been resolved.

8.2.4 Method blank analysis should be performed at the following frequency and within these criteria:

8.2.4.1 For the analysis of volatile compounds, a method blank analysis must be performed once for each 12-hour shift and must be analyzed before any samples.

8.2.4.2 A method blank for volatile analysis should contain less than or equal to the Method Reporting limit of methylene chloride (see Att. K for Mass DEP). For all other TCL compounds, the method blank should contain less than ½ MRL of any single TCL analyte. See section 11.5 for instructions on corrective action when criteria are exceeded.

8.2.4.3 Blank Spike/Blank spike duplicate analysis must be performed once for each 12-hour shift, after the tune and CCV, and must be analyzed before any samples. BS/BSD concentrations are to be at the midpoint (median standard level) of the calibration curve See section 10.0 for BS/BSD acceptance criteria.

ESS Laboratory. This document may be reproduced solely for internal use.

8.2.4.3.1 **Low Level BS/BSD,** 10 µl of the BS/BSD solution (§ 7.2.3.1) added to each of two VOA vials containing 5 ml of reagent water. Final spike concentration is 25 µg/L.

8.2.4.3.2 **High Level BS/BSD**, 40 µl of the BS/BSD solution (§ 7.2.3.1) is added to 100 ml of DI water. Transfer to two 40 ml vials for the BS and BSD. Final spike concentration is 10 µg/L.

8.3 **GC/MS analysis**: All samples and standards are analyzed under the same conditions in the associated initial calibration. Run logs are filled according to section 8.1.4.

8.3.1 Soil/Sediment Samples

8.3.1.1 All samples and standard solutions should be allowed to warm to ambient temperature before analysis.

8.3.1.2 Set up the GC/MS system as outlined in Section 8.1.2.

8.3.1.3 BFB tuning criteria and daily GC/MS calibration criteria must be met before analyzing samples.

8.3.1.4 Sample loading

8.3.1.4.1 **Low Level Analysis**: Sample vials containing approximately 5g soil, 5ml water and 1 magnetic stir bar are loaded directly onto the Archon. The Archon is programmed to stir the samples.

8.3.1.4.2 **High Level Analysis**: Samples must have been spiked with surrogate and, when applicable, matrix spike solution. The analyst will take a 250 µL aliquot of methanol extract directly through the septa of the sample vial. Transfer the aliquot into a 50 ml volumetric flask containing DI water. Volumize with DI water, invert 3 times, and transfer into a clean 40m VOA vial. The vials are loaded into the Archon for analysis by method 5030B

8.3.1.5 Internal Standards

8.3.1.6 Low Level Method: The Archon is programmed to add 1 µL Surrogate/Internal standard (§ 7.2.4.1.1) to the sample. The Archon also adds an additional 5 ml DI water to each vial.

8.3.1.7 High Level Method: Five (5) ml of the sample dilution (§ 8.3.1.4.2) is transferred by the Archon to the 5 ml sparge tube. The Archon is programmed to add 1 µL internal standard (§ 7.2.5.1.1) to all standards, blanks and samples.

ESS Laboratory. This document may be reproduced solely for internal use.

8.3.1.8 Purge the sample for 11.0 ± 0.1 min at ambient temperature. At the conclusion of the purge time, the purge-and-trap will sound a ready signal from the GC and begin to desorb the trap while initiating the chromatographic temperature program and the CHEMSTATION data acquisition.

8.3.1.9 After the sample has been desorbed for 1 minute, the 3100, Stratum will recondition the trap by heating to 265°C while back flushing with Helium. This step will take 10 minutes.

8.3.1.10 For the high level method if any sample analyte concentration exceeds the initial calibration range, the sample must be re-analyzed at a higher dilution. If the low-level sample produces results above the calibration range the methanol extract must be analyzed. To dilute a methanol extract, a smaller amount of methanol can be taken from the sample vial and re-analyzed. Record dilutions in the Run logbook. All dilutions should keep the response of the major constituents in the upper half of the linear range of the curve.

8.3.1.11 When a sample is analyzed that has any target compound at a level exceeding twice the initial calibration range, this analysis should be followed by a blank reagent water analysis to demonstrate that system is clean. If the blank analysis is not free of interferences, the system should be decontaminated. Sample analysis may not resume until a blank can be analyzed that is free of interferences. Analysis of sample in the contaminated chamber may not resume until the analysis of reagent water in the chamber is free of any target compounds.

NOTE: Since the analytical system is automated the analyst may not be aware that a high concentration sample has been analyzed. If analysis of subsequent samples occurs, then the presence of the high concentration analyte makes reanalysis of that sample necessary to determine if carryover has occurred.

8.3.1.12 **For matrix spike analysis see section 7.2.7.**

8.4 Data interpretation

8.4.1 Qualitative identification

8.4.1.1 An analyte (Table 2) is identified by comparison of the sample mass spectrum with a standard's mass spectrum obtained on the user's GC/MS. Reference spectra are obtained through analysis of the calibration standards. To compare the sample and reference spectra, go into the EnviroQuant software (QEDIT). The characteristic ions from the reference spectra are defined to be the three ions of greatest relative intensity - any ions over 30% if less than three such ions are present.

ESS Laboratory. This document may be reproduced solely for internal use.
MASTER

8.4.1.2 The requirements for qualitative verification by comparison of mass spectra are:

8.4.1.2.1 The intensities of the characteristic ions of a compound maximize in the same scan or within one scan of each other. Selection of a peak by a data system target compound search routine where the search is based on the presence of a target chromatographic peak containing ions specific for the target compound at a compound-specific retention time will be accepted as meeting this criterion.

8.4.1.2.2 The RRT of the sample component is compared to the RRT from the 25 ppb standard in the ICAL and must be within ±0.06 RRT units of the RRT of the standard component.

8.4.1.2.3 The relative intensities of the characteristic ions agree to within 30% of the relative intensities of these ions in the reference spectrum. (Example: For an ion with an abundance of 50% in the reference spectrum, the corresponding abundance in a sample spectrum can range between 20% and 80%).

8.4.1.2.4 Structural isomers that produce very similar mass spectra should be identified as individual isomers if they have sufficiently different GC retention times. Sufficient GC resolution is achieved if the height of the valley between two isomer peaks is less than 25% of the sum of the two peak heights. Otherwise, structural isomers are identified as isomeric pairs. ESS Laboratory currently reports para and meta Xylenes due to inability of resolving the isomers.

8.4.1.2.5 Identification is hampered when sample components are not resolved chromatographically and produce mass spectra containing ions contributed by more than one analyte. When chromatographic peaks obviously represent more than one component (i.e., a broadened peak with shoulder(s) or a valley between two or more maxima), appropriate selection of analyte spectra and background spectra are important. Examination of extracted ion current profiles of appropriate ions can aid in the selection of spectra, and in qualitative identification of compounds. When analytes co-elute (i.e., only one chromatographic peak is apparent), the identification criteria can be met, but each analyte spectrum will contain extraneous ions contributed by the co-eluting compound.

MASTER

ESS Laboratory. This document may be reproduced solely for internal use.

8.4.1.2.6 For samples containing components not associated with the calibration standards, a library search may be made for the purpose of tentative identification. The necessity to perform this type of identification will be determined by the type of analyses being conducted. When serving the role of QA (or referee) laboratory, tentatively identified compounds (TICs) shall always be reported. Guidelines for making tentative identification are:

- Relative intensities of major ions in the reference spectrum (ions >10% of the most abundant ion) should be present in the sample spectrum.
- The relative intensities of the major ions should agree within ±30% to be consistent with target compound list identification. (Example: For an ion with an abundance of 50% in the standard spectrum, the corresponding sample ion abundance must be between 20 and 80%).
- Molecular ions present in the reference spectrum should be present in the sample spectrum.
- Ions present in the sample spectrum but not in the reference spectrum should be reviewed for possible background contamination or presence of co-eluting compounds.
- Ions present in the reference spectrum but not in the sample spectrum should be reviewed for possible subtraction from the sample spectrum because of background contamination or co-eluting peaks. Data system library reduction programs can sometimes create these discrepancies.

8.4.2 Quantitative Analysis

8.4.2.1 Identified compounds are quantified by the internal standard method, utilizing the integrated abundance of the primary ion. The internal standards are listed in Section 7.2.5. The EnviroQuant method is setup to calculate the concentration of the analytes of interest in ng/ml using the initial calibration results stored in the method (see attached method). This raw data number does not account for deviations in sample volume, sample weight, dilution factors, and % moisture. To include these other factors, see section 9.0.

9.0 CALCULATIONS

9.1 Response Factor (RF)

$RF = (As \times Cis)/(Ais \times Cs)$

ESS Laboratory. This document may be reproduced solely for internal use.

Where:

A_S = Peak area (or height) of the analyte or surrogate.

A_{IS} = Peak area (or height) of the internal standard.

C_S = Concentration of the analyte or surrogate, in µg/L.

C_{IS} = Concentration of the internal standard, in µg/L.

9.2 Percent Relative Standard Deviation (%RSD)

$$\% \text{ RSD} = (SD/ RF_{Average}) \times 100\%$$

Where:

RSD = Relative standard deviation.
RF = Mean of 5 initial RFs for a compound.
SD = Standard deviation of average RFs for a compound.

9.3 Percent Difference

$$\%\text{Difference} = ((RF_{Average} - RFc)/ RF\ Average) \times 100\%$$

Where:

$RF_{Average}$ = Average response factor from initial calibration
RF_C = Response factor from current verification check standard.

9.4 Percent Drift

$$\%\text{Drift} = ((C1-C0)/ C1) \times 100\%$$

Where:

C_1 = compound standard concentration

C_0 = measured concentration using selected quantitation method

9.5 Concentration of Target Analytes in Water and Water-Miscible Waste Concentration

$$\mu g/L = (As)(Cis)(D) / (Ais)(RF_{Average})(Vs)(1000)$$

Where:

A_S = Area (or height) of the peak for the analyte in the sample.

A_{IS} = Area (or height) of the peak for the internal standard.

Cis = Concentration of the internal standard in the concentrated sample extract or volume purged in µg/L.

D = Dilution factor, if the sample or extract was diluted prior to analysis. If no dilution was made, D = 1. The dilution factor is always unit less.

$RF_{Average}$ = Mean response factor from the initial calibration.

V_S = Volume of the aqueous sample extracted or purged (ml). If units of liters are used for this term, multiple the results by 1000.

ESS Laboratory. This document may be reproduced solely for internal use.

Using the units specified here for these terms will result in a concentration in units of ng/ml, which is equivalent to µg/L.

9.6 Concentration of Target Analytes in Sediment/Soil, Sludge, and Waste

9.6.1 High-concentration procedure concentration

$$\mu g/Kg \text{ dry wt} = \frac{(As)(Cis)(Vt) / (Ais)(RF_{Average})(Vi)(Ws)}{(\%S/100)}$$

Where:

A_S, Ci_S, A_{IS}, $\overline{RF}$ are the same as in water and water-miscible waste above.
V_t = see section 2.7.
V_i = Volume of extract added (500 µL or lower when a dilution is need) for purging.
W_S = Weight of sample extracted or purged (g). The wet weight or dry weight may be used, depending upon the specific applications of the data.
%S = % Solids

9.6.2 Low-concentration procedure concentration

$$\mu g/Kg \text{ dry wt} = \frac{(As)(Cis)(Vt) / (Ais)(RF_{Average})(Vi)(Ws)}{(\%S/100)}$$

Where:

A_S, C_{IS}, A_{IS}, RF_{Avc}, W_S are the same as in water and water-miscible waste above.

V_t = Volume of total extract (µL) (use 10,000 µL for volume of DI purged)

9.7 Percent Solids

%dry weight = ((g of dry sample)/ (g of sample)) x 100%

9.8 Percent moisture

% Moisture = 100 - % Solids

10.0 QUALITY ASSURANCE/QUALITY CONTROL

Accuracy and Precision

All laboratory personnel must demonstrate initial proficiency for each sample preparation method/matrix that he or she performs. All new employees must successfully demonstrate initial proficiency prior to independently performing analysis on real samples. This must be accomplished by generating data of acceptable accuracy and precision for target analytes in

ESS Laboratory. This document may be reproduced solely for internal use.

a clean matrix. The initial proficiency results will become part of each employee's training file.

QC Sample Preparation:
Spiking Solution: Four QC samples must be prepared from a spiking solution with the analytes of interest. The spiking solution must be made using standards **prepared independently from those used for calibration**. The samples must be prepared at a concentration that world result in data falling within the middle of the calibration curve.

Sample Analysis:
The four QC samples must be analyzed within the criteria of the method being evaluated. The QC samples must be handled in exactly the same manner as actual samples.

Accuracy Calculation:
Accuracy is defined as the closeness of agreement between an observed value and an accepted reference value. Each of the four spiked samples will be calculated for percent recovery. The average of the percent recovery values is the accuracy result.

Precision Calculation:
Precision is defined as the agreement of a set of replicate measurements without assumption of knowledge of the true value. Precision is estimated by the relative standard deviation (RSD) of the four QC samples.

$\%RSD = (s / \bar{x})\ 100\ \%$

Where:

s = Standard Deviation of a finite number of values. On a scientific calculator use the **σxn-1** key.

$\bar{x}$ = the average of the four QC sample % recoveries.

Reporting Accuracy and Precision
Accuracy and Precision data should be presented with the following minimum info:

Matrix: Prep Method:
Analysis Method: Date Analyzed:

Parameter	*% Rec. QC 1*	*% Rec. QC 2*	*% Rec. QC 3*	*% Rec. QC 4*	*Average Recovery*	*Standard Deviation*	*%RSD*

Interpretation of Results: Percent recovery is to be within 75-125% for all analytes with a RPD of ≤20%. For the full 5035/8260B list a maximum of 5 sporadic marginal failures are allowed with the expanded criteria of 60-140%.

10.1 A preparation batch of samples is defined as a group of up to twenty field samples of similar matrix type that have been prepared at the same time or time sequence with the same lots of reagents for the same analysis. In addition to the twenty samples, each preparatory batch will contain at a minimum, a method blank, a blank spike, a

ESS Laboratory. This document may be reproduced solely for internal use.

matrix spike, and a matrix spike duplicate. An analytical or instrumental batch is defined as samples that are analyzed together within the same time period or in continuous sequential time periods. Within the analytical batch are included individual QC requirements as defined by the analytical (determinative) method. For instance, each injection sequence would begin with a tune & CCV (or initial 6-point calibration and ICV), followed by a method blank, the other QC samples (normally a BS, MS, MSD, etc.), and the remaining field samples. Preparation batches of samples may be continuously strung together in the run sequences, as long as the analytical batch QC requirements meet the acceptance criteria established within this SOP. If all field and QC samples can not be completed within the 12-hour clock, then another tune, CCV, and MB are required. Each analytical sequence must be documented using the run log in Figure 1.

10.2 Perform BFB tune every 12 hours. Tuning acceptance criteria are presented in Section 11.1. The computer software will evaluate the tune information. The analyst should be aware of the process used. The criteria specified in Section 11.1 would typically be derived using three scans, one at the apex, and one on both sides of the apex.

10.3 Run a 7-point initial calibration curve (Low Level Method) or a 8-point initial calibration curve (High Level method), using the primary source standards each time major instrument maintenance occurs, or if the CCV does not meet acceptance criteria. Acceptance criteria are presented in Section 11.2.

10.4 Run initial calibration verification (ICV) standard using secondary standards (7.2.3) immediately following the initial calibration curve. Acceptance criteria are listed in Section 11.3.

10.5 Run a mid-point Continuing Calibration Verification (CCV) using the primary source standards on a daily basis after the BFB tune and before sample analysis. Also run a CCV every 12 hours during an analytical sequence. Acceptance criteria are listed in Section 11.4.

10.6 A method blank must be prepared with each batch of samples not to exceed 12 hours. The method blank should be prepared from organic-free water and all reagents in the same ratios used to prepare samples. The method blanks are to be related to each 12-hour sequence of samples injected. Acceptance criteria for these blanks are listed in Section 8.2.4 and corrective action is listed in Section 11.5. Instrument blanks may be injected at any time in the sequence to verify absence of contamination.

10.7 A Blank spike (BS) and Blank spike duplicate (BSD) must be prepared and analyzed with each batch of samples. The BS/BSD are prepared using a source different than that used to prepare the initial calibration standards and contain all method target analytes. Acceptance criterion is 70-130% and ≤25% RPD (<20 for Mass DEP MCP). ***For Mass DEP MCP, all compounds in the BS/BSD must be between 70-130%Rec with allowances for difficult analytes (see Attachment K). Sporadic marginal exceedances have the expanded criterion of 40-160%.***

ESS Laboratory. This document may be reproduced solely for internal use.

Number of Analytes in BS	Allowable number of Marginal Exceedances
>90	5
71-90	4
51-70	3
31-50	2
11-30	1
<11	0

Exceedances should be within marginal exceedance limits (Table 3) or expanded criterion listed above.

10.7.1 Control charts will be maintained for the BS/BSD for a representative subset of target analytes and surrogate spikes. Biannually, control limits will be determined for all target analytes and surrogates for comparison to default limits.

10.8 On an ongoing basis the laboratory analyzes matrix spikes and matrix spike duplicates from each batch of 20 samples.

10.8.1 The matrix spike is prepared as described in Section 7.2.7. ***NOTE: MA MCP requires a special preparation when the client requests that MS/MSDs are performed on their project. See Attachment H for this procedure.***

10.8.2 Matrix spike control limits are 70-130%. %RPD between spike and spike duplicate should be ≤30%. For samples outside control limits, see Section 11.6 for corrective action.

10.9 Surrogates recoveries limits are 70-130%. For samples outside control limits, see Section 11.7 for corrective action.

10.10 The relative retention times (RRTs) need to be checked for each identified compound in samples, and compared to standard RRT. Acceptance criteria are presented in Section 11.8.

10.11 Ion abundance for target compounds and any tentatively identified compounds need to meet specific requirements. Acceptance criteria for ion abundance are presented in Section 11.9.

10.12 Internal standard area counts for standards and samples must meet specifications as described in Section 11.10.

10.13 Data shall be checked to ascertain if it conforms to accepted practices. All sample analytical results used for final data reporting must be between the low standard and the high standard. Results, which fall below the low standard or above the high

ESS Laboratory. This document may be reproduced solely for internal use.
MASTER

standard, are to be reported as estimated values. Corrective actions are described in Section 11.11.

10.14 MDLs are determined in reagent water or organic-free sand/soil and verified annually. (Project-specific requirements may require that the MDL study be performed in the site-specific matrix.). See SOP 110_0013 for detailed MDL instructions.

11.0 DATA VALIDATION

The items shall be verified and documented using the VOA Sequence Log (Attachment A).

11.1 Ensure that the BFB tune was run at the beginning of each 12-hour sequence for each batch of samples analyzed. The acceptance criteria are listed below:

BFB Key Ions and Ion Abundance Criteria

Mass	Ion Abundance Criteria
50	15.0-40.0% of mass 95
75	30.0-60.0% of mass 95
95	base peak, 100% relative abundance
96	5.0-9.0% of mass 95
173	< 2.0% if mass 174
174	> 50.0% of mass 95
175	5.0-9.0% of mass 174
176	> 95.0%, but less than 101% of mass 174
177	5.0-9.0% of mass 176

11.1.1 If the BFB acceptance criteria are not met, perform any or all of the following corrective actions:

- Re-purge BFB.
- Retune with PFTBA, and then re-inject BFB.
- Clean MS source, retune with PFTBA, and re-inject BFB.

11.1.2 If the tuning criteria still cannot be met after performing the above, have the mass spectrometer serviced by manufacturer representative.

11.2 After a seven-point initial calibration curve is analyzed, ensure that the following criteria were met.

11.2.1 For the RFs, the %RSD must be less than 30% for all method target analytes, except for the poor purgers where the %RSD must be less than 50%.

MASTER

ESS Laboratory. This document may be reproduced solely for internal use.

11.2.1.1 If the %RSD of any method target analyte is 15% or less, then the relative response factor is assumed to be constant over the calibration range, and the average relative response factor may be used for quantitation.

11.2.1.2 If the %RSD of any method target analyte is greater than 15%, calibration curves must be constructed using first or higher order regression fits of the six calibration points. ***NOTE: A minimum of 5 points are used for average and linear regression calibration, six point for second order, and seven points for third order calibrations.*** The corresponding Coefficients of Determination (R^2) must be 0.99 or greater.

11.2.1.3 If these acceptance criteria are not met, then the following corrective actions should be performed: (1) adjust the instrument and/or perform instrument maintenance; or (2) narrow the calibration range using standards at different concentrations. The low end of the calibration curves must be carefully watched.

11.2.2 System Performance Check Compounds (SPCCs) and continuing calibration compounds (CCCs) must be evaluated and passed for initial calibration. Refer to Section 8.1.9 and 8.1.10.

11.3 If a 7-point or 8-point initial calibration was performed, verify that initial calibration verification (ICV) was performed. The percent difference for the CCC analytes must be within 20% (30% for all other target analytes).

11.4 After the continuing calibration verification (CCV) standard is analyzed, ensure it was run at the required frequency (every 12 hours, 20 samples, or initially before daily analysis). In addition, the following acceptance criteria must be met.

11.4.1 System Performance Check Compounds (SPCCs): A system performance check must be made during every 12-hour shift. This is the same check that is applied during the initial calibration. If the minimum response factors are not met, the system must be evaluated, and corrective action must be taken before sample analysis begins. The minimum RF for volatile SPCCs is listed in Section 8.1.9.

11.4.2 Calibration Check Compounds (CCCs): After the system performance check is met, CCCs listed in Section 8.1.10 are used to check the validity of the initial calibration with a limit of <20% drift or difference. The acceptance criterion is < 30% drift or difference for all other method target analytes.

MASTER

ESS Laboratory. This document may be reproduced solely for internal use.

If these criteria are exceeded, corrective action is necessary. If corrective action fails to produce consecutive (immediate) calibration verification within acceptance criteria, then the analyst may perform maintenance to try to troubleshoot the instrument. After maintenance, the analyst must analyze two consecutive CCV's at two concentrations (one at or below mid-range) to demonstrate that corrective action was successful. If not, then a new seven/eight-point calibration must be generated. These criteria must be met before sample analysis begins and re-analysis of samples up to the last acceptable CCV standard must occur with the following exceptions:

- When the acceptance criteria is exceeded high, high bias, then all samples that are non-detects may be reported.

- When the acceptance criteria for the CCV are exceeded low, low bias, sample results that exceed a maximum regulatory limit may be reported.

11.4.3 When performing analyses for Mass DEP MCP or CT-RCP, any analyte outside of criteria in the CCV must be noted in the project narrative.

11.5 Assess the method blanks. The analyst shall confirm that the method blank was analyzed at the required frequency and the criteria in Section 8.2.4 are met. Analytical batches with Method blanks outside acceptance criteria will be re-prepped and re-analyzed with the following exceptions:

11.5.1 Samples that are that are at least twenty times higher than the method blank may be reported.

11.5.2 When the method blank is less than 5% of the regulatory limit associated with the analyte the method blank would be acceptable.

11.5.3 If the analyte is found in the method blank above the ½ MRL but is not in any of the associated samples, no corrective action is needed.

11.5.4 Any results that are reported with method blank contamination must be B-flagged.

11.6 Assess that matrix spike/matrix spike duplicates were analyzed at required frequency (dependent of sample volume provided). Acceptance criteria are that all % Recovery and/or RPD results meet project-established goals. If no project goals are specified, then results must be within the indicated control limits. If these conditions are not met, perform the following corrective actions as appropriate.

11.6.1 If both BS and MS/MSD recoveries are unacceptable, then the entire batch of field and QC samples must be reanalyzed.

MASTER

ESS Laboratory. This document may be reproduced solely for internal use.

11.6.2 If the MS/MSD is unacceptable, but the BS is acceptable, then a potential matrix effect has been identified. Reasonable attempts must be made to address matrix interference. The client must be notified in the case narrative of the matrix problem.

11.7 Check the surrogate calculations for correctness for all samples, blanks, BS, MS, and MSD. The following acceptance criteria apply to surrogate recoveries.

11.7.1 The surrogate recoveries for all QC samples must be within control limits of 70-130%. If the BS and/or method blank recoveries are outside limits, re-analysis must be performed for verification. If still outside limits, then corrective action is necessary. ***When samples are to be to be run for the MA-MCP and CT-RCP, surrogate limits must be within 30%.***

11.7.2 If sample surrogate recoveries exceed these limits, the sample must be re-analyzed. If the results are still outside the limits, a matrix affect is verified and results need to be discussed in case narrative. ***NOTE: If an obvious matrix effect is displayed on the chromatogram (Unresolved complex mixture, UCM), then re-analysis is not necessary. MA-MCP and CT-RCP projects must have a copy of the chromatogram included with the report.***

11.8 The relative retention times must be checked for all identified compounds in both standards and samples. The internal standard absolute retention times must also be checked for all analyses. Acceptance criteria are as follows:

11.8.1 The relative retention times of each compound in each calibration run should agree within 0.06 relative retention time (RRT) units. Late-eluting compounds usually have much better agreement.

11.8.2 Internal standard retention time:

11.8.2.1 If the retention time for any CCV internal standard changes by more than 30 seconds from the mid-point standard of the initial calibration, the chromatographic system must be inspected for malfunctions and corrections must be made, as required.

11.8.2.2 If the retention time for any sample internal standard changes by more than 30 seconds from the daily calibration, the chromatographic system must be inspected for malfunctions and corrections must be made, as required

11.9 The analyst must verify that ion abundance meets specific criterion for the various analyses. The following acceptance criteria shall be checked for all appropriate samples.

MASTER
Uncontrolled Copy

11.9.1 All ions present in the standard mass spectrum at a relative intensity greater than 10% (most abundant ion in the spectrum equals 100%) must be present in the sample spectrum.

11.9.2 The relative intensities of ions specified in Section 11.10.1 must agree within plus or minus 30% between the standard and sample spectra. (Example: For an ion with an abundance of 50% in the standard spectrum, the corresponding sample abundance must be between 20 and 80 percent.)

11.9.2.1 Molecular ions present in the reference spectrum should be present in the sample spectrum.

11.9.2.2 Ions present in the sample spectrum but not in the reference spectrum should be reviewed for possible background contamination or presence of co-eluting compounds.

11.9.2.3 Ions present in the reference spectrum, but not in the sample spectrum should be reviewed for possible subtraction from the sample spectrum because of background contamination or co-eluting peaks. Data system library reduction programs can sometimes create these discrepancies.

11.9.3 For samples containing components not associated with the calibration standards, a library search may be made for the purpose of tentative identification. The necessity to perform this type of identification will be determined by the purpose of the analyses being conducted. When serving the role as QA (or referee) laboratory, tentatively identified compounds (TICs) are always reported. Computer-generated library search routines should not use normalization routines that would misrepresent the library or unknown spectra when compared to each other. For example, the RCRA permit or waste de-listing requirements may require the reporting of non-target analytes. Only after visual comparison of sample spectra with the nearest library searches will the mass spectral interpretation specialist assign a tentative identification. Guidelines for making tentative identification are as follows:

11.9.3.1 Relative intensities of major ions in the reference spectrum (ions > 10% of the most abundant ion) should be present in the sample spectrum.

11.9.3.2 The relative intensities of the major ions should agree within ±30%. (Example: For an ion with an abundance of 50% in the standard spectrum, the corresponding sample ion abundance must be between 20 and 80%.)

11.9.3.3 Molecular ions present in the reference spectrum should be present in the sample spectrum. Ions present in the sample spectrum but not

ESS Laboratory. This document may be reproduced solely for internal use.

in the reference spectrum should be reviewed for possible background contamination or presence of co-eluting compounds.

11.9.3.4 Ions present in the reference spectrum, but not in the sample spectrum should be reviewed for possible subtraction from the sample spectrum because of background contamination or co-eluting peaks. Data system library reduction programs can sometimes create these discrepancies.

11.10 The analyst will check the internal standard area counts for all calibration standards, QC samples, and samples for quantitation. If the area for any of the CCV internal standards changes by a factor of two (-50% to +100%) from the mid-point standard of the initial calibration, the mass spectrometer must be inspected for malfunctions and corrections must be made, as appropriate. All sample internal standards must be -50 to 200% of their associated CCV. If the internal standard area counts fail this criterion, the following corrective actions should be considered:

11.10.1 Check to ensure there was no error in internal standards preparation or addition. Also, check instrument performance.

11.10.2 If the CCV failed criterion, re-analyze once. If this second consecutive CCV still does not meet criterion, then a new initial calibration must be performed.

11.10.3 If the internal standards for samples are outside criterion, then re-analyze once. If re-analysis produces results within criteria, then report these results. If the re-analysis is still outside criterion, discuss matrix issue in project narrative. ***NOTE: If an obvious matrix effect is displayed on the chromatogram (Unresolved complex mixture, UCM), then re-analysis is not necessary. MA-MCP and CT-RCP projects must have a copy of the chromatogram included with the report.***

11.11 The analyst must verify all reported results are derived from analytical results that are below the highest standard of the initial calibration curve and above the low standard. Values reported below the low standard are to be reported as estimated values (J values). For samples that exceed the calibration curve, dilute and analyze an appropriate sample aliquot.

11.12 All manual integration must be printed, when made, for verification. See manual integration policy in SOP 110_0016.

11.13 Besides the items listed in Sections 11.1 through 11.12, the analyst should also verify the additional items as noted in Attachment A. A second level of review must be performed by a second analyst; results are recorded on Attachment A.

12.0 REFERENCES

12.1 SW-846 Methods 5035, 8260B and 8000C, Test Methods for the Analysis of Solid Waste, Third Edition, Update III.

ESS Laboratory. This document may be reproduced solely for internal use.

12.2 HP GC EnviroQuant User's Guide, HPG1045A.

12.3 HP Environmental Data Analysis User's Guide HPG0032C.

12.4 HP 6890 GC Operations Manual.

12.5 HP 5890 Series II Operations Manual.

12.6 HP 5971A MS Operations Manual

12.7 HP 5972 MS Operations Manual

12.8 TNI Standard 2009: Volume 1, Module 2 and Volume 1, Module 4.

13.0 ATTACHMENTS

13.1 Attachment A- Run (Sequence) Logbook.

13.2 Attachment C- Sample Bottle Prep Procedure for Low Level VOCs in Soil.

13.3 Attachment D- ESS Laboratory VOC 5035 Low Level Sample Collection Procedure.

13.4 Attachment E- Sample Bottle Prep Procedure for High Level VOCs in Soil.

13.5 Attachment F- ESS Laboratory VOC 5035 High Level Sample Collection Procedure.

13.6 Attachment G- Method Summary DQO table.

13.7 Attachment H- Performing Matrix Spike (MS) and Matrix Spike Duplicate Analyses (MSD) for Methanol-Preserved Soil/Sediment Samples under the MCP.

13.8 Attachment J - Encore® sample collection, storage and preparation procedure.

13.9 Attachment K- Mass DEP MCP QC Requirements; Tables II A-1.

13.10 Attachment L- Connecticut DEP RCP QC Requirements.

14.0 POLLUTION PREVENTION AND WASTE MANAGEMENT

14.1 ESS Laboratory's policies and pollution prevention and waste management are covered in SOP 90_0002, Hazardous Waste Contingency and Emergency Response Plan. All employees are trained in the requirements of the SOP.

15.0 METHOD PERFORMANCE

15.1 Precision and Accuracy data must be generated by all employees before performing this analysis on client samples. The data is generated by analyzing a method blank

ESS Laboratory. This document may be reproduced solely for internal use.

and four blank spike samples. Acceptance criteria are 70-130% Recovery and %RSD of ≤ 30%.

15.2 The precision and accuracy data in Table 1 were developed using the high level method. Values are in µg/Kg.

16.0 TABLES, DIAGRAMS, FLOWCHARTS, AND VALIDATION DATA

Table 1. Typical Precision and Accuracy data generated 3/15/2005

Analyte	Spk	Avg	%Rec	%RSD	Analyte	Spk	Avg	%Rec	%RSD
Dichlorodifluoromethane	1250	1320	106	4.0	Toluene	1250	1277	102	2.5
Chloromethane	1250	1208	97	2.6	2-Hexanone	6250	6314	101	2.8
Vinyl Chloride	1250	1303	104	3.4	trans-1,3-Dichloropropene	1250	1294	104	2.1
Bromomethane	1250	1232	99	2.1	1,1,2-Trichloroethane	1250	1302	104	2.3
Chloroethane	1250	1260	101	1.5	1,3-Dichloropropane	1250	1286	103	2.1
Trichlorofluoromethane	1250	1321	106	3.6	Tetrachloroethene	1250	1308	105	2.6
Diethyl ether	1250	1325	106	2.3	Dibromochloromethane	1250	1178	94	2.1
Acetone	6250	6191	99	1.8	1,2-Dibromoethane	1250	1288	103	1.6
Carbon Disulfide	1250	1305	104	2.9	1-Chlorohexane	1250	1253	100	3.5
1,1-Dichloroethene	1250	1304	104	2.7	Chlorobenzene	1250	1267	101	2.2
Methylene Chloride	1250	1279	102	2.3	1,1,1,2-Tetrachloroethane	1250	1292	103	1.9
Methyl tert-Butyl Ether	2500	2618	105	4.3	Ethylbenzene	1250	1255	100	2.2
trans-1,2-Dichloroethene	1250	1297	104	2.6	Xylene P,M	2500	2514	101	1.9
1,1-Dichloroethane	1250	1276	102	2.2	Xylene O	1250	1276	102	2.0
Vinyl Acetate	1250	1250	100	1.6	Styrene	1250	1287	103	2.3
Di-isopropyl ether	1250	1263	101	2.0	Bromoform	1250	1158	93	2.1
Ethyl tertiary-butyl ether	1250	1269	102	1.4	Isopropylbenzene	1250	1275	102	2.3
2-Butanone	6250	6318	101	2.0	Bromofluorobenzene	1250	1138	91	1.9
cis-1,2 Dichloroethene	1250	1286	103	1.7	1,2,3-Trichloropropane	1250	1257	101	2.4
2,2-Dichloropropane	1250	1237	99	3.7	Bromobenzene	1250	1292	103	2.2
Bromochloromethane	1250	1308	105	1.7	1,1,2,2-Tetrachloroethane	1250	1290	103	1.8
Tetrahydrofuran	1250	1231	98	2.7	n-Propylbenzene	1250	1255	100	4.9
Chloroform	1250	1264	101	2.2	2-Chlorotoluene	1250	1265	101	2.7
1,1,1-Trichloroethane	1250	1293	103	3.0	4-Chlorotoluene	1250	1230	98	2.5
1,1-Dichloropropene	1250	1242	99	2.2	1,3,5-Trimethylbenzene	1250	1269	102	2.7
Carbon Tetrachloride	1250	1299	104	3.3	tert-Butylbenzene	1250	1263	101	2.7
Benzene	1250	1278	102	1.9	1,2,4-Trimethylbenzene	1250	1264	101	2.4
1,2-Dichloroethane-d4	1250	1230	98	1.8	sec-Butylbenzene	1250	1262	101	3.1
1,2-Dichloroethane	1250	1278	102	1.7	1,3 Dichlorobenzene	1250	1233	99	2.8
Tertiary-amyl methyl ether	1250	1264	101	2.1	4-Isopropyltoluene	1250	1253	100	2.3

ESS Laboratory. This document may be reproduced solely for internal use.

Trichloroethene	1250	1217	97	1.9	1,4 Dichlorobenzene	1250	1225	98	2.4
1,2-Dichloropropane	1250	1264	101	1.6	n-Butylbenzene	1250	1263	101	2.8
Dibromomethane	1250	1273	102	1.4	1,2 Dichlorobenzene	1250	1263	101	1.7
1,4-Dioxane	25000	23525	94	1.6	1,2-Dibromo-3-Chloropropane	1250	1156	92	2.4
Bromodichloromethane	1250	1287	103	1.8	1,2,4-Trichlorobenzene	1250	1218	97	1.7
4-Methyl-2-Pentanone	6250	6580	105	1.6	Hexachlorobutadiene	1250	1285	103	2.4
cis-1,3-Dichloropropene	1250	1285	103	1.9	Naphthalene	1250	1174	94	2.1
Toluene-d8 (SURR)	1250	1171	94	2.2	1,2,3-Trichlorobenzene	1250	1205	96	2.9

17.0 DEFINITIONS

17.1 **Accuracy**: The closeness of agreement between an observed value and an accepted reference value. When applied to a set of observed values, accuracy will be a combination of a random component and of a common systematic error (or bias) component.

17.2 **Batch**: A group of samples which behave similarly with respect to the sampling or the testing procedures being employed and which are processed as a unit. For QC purposes, if the number of samples in a group is greater than 20, then each group of 20 samples or less will all be handled as a separate batch.

17.3 **Bias**: The deviation due to matrix effects of the measured value (x_s - x_u) from a known spiked amount, where x_s is the spiked sample and x_u is the un-spiked sample. Bias can be assessed by comparing a measured value to an accepted reference value in a sample of known concentration or by determining the recovery of a known amount of contaminant spiked into a sample (matrix spike).

17.4 **Control Sample**: A QC sample introduced into a process to monitor the performance of the system.

17.5 **Equipment Blank**: A sample of analyte-free media which has been used to rinse the sampling equipment. It is collected after completion of decontamination and prior to sampling. This blank is useful in documenting adequate decontamination of sampling equipment.

17.6 **Method Reporting Limit**: The lowest concentration that can be reliably achieved within specified limits of precision and accuracy during routine laboratory operating conditions. The MRL is generally 5 to 10 times the MDL. ESS Laboratory sets the MRL to the lowest non-zero standard in the calibration curve or higher.

17.7 **Field Duplicates**: Independent samples which are collected as close as possible to the same point in space and time. They are two separate samples taken from the same source, stored in separate containers, and analyzed independently. These duplicates are useful in documenting the precision of the sampling process.

Uncontrolled Document
MASTER

17.8 **Blank Spike (BS)**: A known matrix spiked with compound(s) representative of the target analytes. This is used to document laboratory performance.

17.9 **Matrix**: The component or substrate (e.g., surface water, drinking water) which contains the analyte of interest.

17.10 **Matrix Duplicate**: An intralaboratory split sample which is used to document the precision of a method in a given sample matrix.

17.11 **Matrix Spike**: An aliquot of sample spiked with a known concentration of target analyte(s). The spiking occurs prior to sample preparation and analysis. A matrix spike is used to document the bias of a method in a given sample matrix.

17.12 **Matrix Spike Duplicates**: Intralaboratory split samples spiked with identical concentrations of target analyte(s). The spiking occurs prior to sample preparation and analysis. They are used to document the precision and bias of a method in a given sample matrix.

17.13 **Method Blank**: An analyte-free matrix to which all reagents are added in the same volumes or proportions as used in sample processing. The method blank should be carried through the complete sample preparation and analytical procedure. The method blank is used to document contamination resulting from the analytical process.

17.14 **Method Detection Limit (MDL)**: The minimum concentration of a substance that can be measured and reported with 99% confidence that the analyte concentration is greater than zero and is determined from analysis of a sample in a given matrix type containing the analyte. See SOP 110_0013 for further explanation.

17.15 **Organic-Free Reagent Water**: For volatiles, all references to water in the method refer to water in which an interferant is not observed at the method detection limit of the compounds of interest. A water purification system is used to generate organic-free deionized water.

17.16 **Records**: Include all logbooks, papers, machine readable materials, or other documentary materials, regardless of physical form or characteristics.

17.17 **Surrogate**: An organic compound which is similar to the target analyte(s) in chemical composition and behavior in the analytical process, but which is not normally found in environmental samples.

17.18 **Trip Blank**: A sample of analyte-free media taken from the laboratory to the sampling site and returned to the laboratory unopened. A trip blank is used to document contamination attributable to shipping and field handling procedures. This type of blank is useful in documenting contamination of volatile organics samples.

18.0 PERSONNEL QUALIFICATIONS

ESS Laboratory. This document may be reproduced solely for internal use.

18.1 Analysts who perform this analysis must have a working knowledge or quantitative and qualitative analysis, instrumental methods of analysis, chemical laboratory methods, and equipment.

18.2 All analysts, before performing any analysis, participate in the ESS Laboratory training program (SOP80_0016). The training process consists of reading the Standard Operating Procedure, gaining instruction on the procedure from an experienced analyst, and performing the initial demonstration of capability.

19.0 TROUBLESHOOTING

19.1 If BFB criteria are not met, the analysis must be repeated. Analysis can not begin until BFB meets acceptance criteria. Repeated failures indicate that the MS acquisition parameters must be adjusted. These parameters should be adjusted in manual tune, saved and the tune repeated.

19.2 If manual or auto-tune does not produce BFB spectra within acceptance criteria, the MS source may need cleaning. Cleaning instructions are found in the MS detector manual.

19.3 Method blanks must not contain any target compound greater than ½ the MRL with the exception of methylene chloride (see section 11.5 for expanded criteria). If the method blank does not meet criteria, then system must be cleaned before processing samples. This includes washing the purge vessel and baking the trap.

19.4 See laboratory supervisor or operations manager for all other maintenance problems.

19.5 Record all maintenance in the instrument's maintenance logbook.

20.0 DATA MANAGEMENT AND RECORDS

20.1 **Data Management** - ESS Laboratory's utilizes the Promium Element LIMS system as part of its Data Management system. Client sample information is entered into ELEMENT LIMS and analyses are assigned to each sample. The LIMS allows EPA hold times, minimum batch QC requirements, and QC criteria to be assigned to each analysis. Standards can be entered and assigned to QC samples through the LIMS. Once analysis has been performed, data is imported using DataTool avoiding manual errors. In conjunction with Crystal Reports, the ELEMENT system allows for a wide variety of reporting formats.

20.2 **Records** – The specific retention periods required in the NELAC Standards, EPA-CFR and state and local statutes are followed or exceeded. At a minimum, data records are retained for five years from last use (10 years for drinking water). If there is a question about whether a record should be retained or disposed because no specific requirement could be found, the record is retained until such time as a retention period is specified. Records are stored in specified-labeled locations and are easily retrievable. All raw data associated with testing is also retained including; computer printouts, chromatograms, review forms, and logbooks.

ESS Laboratory. This document may be reproduced solely for internal use.

TABLE 2- Internal Standards with their associated compounds

PENTAFLUOROBENZENE (IS)	CHLOROBENZENE-d5 (IS)	1,4-DICHLOROBENZENE-d4 (IS)
Dichlorodifluoromethane	Toluene - d_8	Isopropylbenzene
Chloromethane	Toluene	trans-1,4-Dichloro-2-Butene
Vinyl Chloride	2-Hexanone (P)	1,2,3-Trichloropropane
Bromomethane	Ethyl methacrylate	Bromobenzene
Chloroethane (P)	1,3-Dichloropropane	1,1,2,2-Tetrachloroethane
Trichlorofluoromethane	Tetrachloroethene	n-Propylbenzene
Diethyl Ether	Dibromochloromethane	2-Chlorotoluene
Acrolein (P)	1,2-Dibromoethane	4-Chlorotoluene
1,1,2-Trichloro-1,2,2-trifluoroethane	1-Chlorohexane	1,3,5-Trimethylbenzene
Acetone (P)	Chlorobenzene	tert-Butylbenzene
Iodomethane (P)	1,1,1,2-Tetrachloroethane	Pentachloroethane
Carbon Disulfide (P)	Ethylbenzene	1,2,4-Trimethylbenzene
1,1-Dichloroethene	Xylene, M,O	sec-Butylbenzene
Allyl Chloride	Xylene P	1,3-Dichlorobenzene
Methyl acetate	Styrene	4-Isopropyltoluene
Methylene Chloride	Bromoform	1,4-Dichlorobenzene
Methyl tert-butyl ether	cis 1,4-Dicchloro-2-butene	n-Butylbenzene
Acrylonitrile (P)	4-Bromofluorobenzene*	1,2-Dichlorobenzene
trans-1,2-Dichloroethene		Hexachloroethane
1,1-Dichloroethane		1,2-Dibromo-3-chloropropane (P)
Vinyl Acetate		1,2,4-Trichlorobenzene
Chloroprene		Hexachlorobutadiene
Di-isopropyl ether		Naphtalene
Ethyl tertiary butyl ether		1,2,3-Trichlorobenzene
2-Butanone (P)		
cis-1,2-Dichloroethene		
2,2-Dichloropropane		
Methyl acrylate		
Bromochloromethane		
Methacrylonitrile		
Tetrahydrofuran		
Chloroform		
Dibromofluoromethane*		
1,1,1-Trichloroethane		
Cyclohexane		
1-Chlorobutane		
1,1-Dichloropropene		
Carbon Tetrachloride		
1,2-Dichloroethane-D4*		
Benzene		
1,2-Dichloroethane		
Tertiary-amyl methyl ether		
Trichlorethene		
Methylcyclohexane		
1,2-Dichloropropane		
Dibromomethane		
1,4-Dioxane (P)		
Bromodichloromethane		
2-Nitropropane		
2-Chloroethyl vinyl ether (P)		
4-Methyl-2-pentanone (P)		
cis-1,3-Dichloropropene		
Toluene		
trans-1,3-Dichloropropene		
1,1,2-Trichloroethane		

IS = Internal Standard; * = Surrogate; (P) = Poor purger

MASTER

ESS Laboratory. This document may be reproduced solely for internal use.

Uncontrolled Document

This page has been deleted

MASTER

Uncontrolled Document

ESS Laboratory. This document may be reproduced solely for internal use.

This page has been deleted

ESS Laboratory. This document may be reproduced solely for internal use.

LABORATORY MS4 RUN LOG

Control# 20.0023

Work orders reported:1505427-02

MATRIX: Soil Element CAL ID: 1505007

METHOD	FILE ID	Dilution	STD ID/COMMENTS	PH	BATCH ID	Sequence ID	RW	RPT	IMP BY
HI051115	M4520960	1	5E22068	NA	CE52244	CYE0307	MD		MDP
HI051115	M4520961	1	5E22069	NA	CE52244	CYE0307	MD		MDP
HI051115	M4520962	100	5D27137 50ul/50ml	NA	CE52244	CYE0307	MD		MDP
HI051115	M4520963	100	5D27137 50ul/50ml	NA	CE52244	CYE0307	MD		MDP
HI051115	M4520964	1		NA	CE52244	CYE0307	MD		
HI051115	M4520965	1		NA	CE52244	CYE0307	MD		
HI051115	M4520966	100		NA	CE52244	CYE0307	MD		MDP
HI051115	M4520967	100	22.7/15 *	NA	CE52244	CYE0307	MD	X	MDP
HI051115	M4520968	100	18.9/15	NA	CE52244	CYE0307	MD		
HI051115	M4520969	100	18.6/15	NA	CE52244	CYE0307	MD		
HI051115	M4520970	10000	Dil: 5ul/50ml-N/A	NA	CE52244	CYE0307	MD		
HI051115	M4520971	1000	5.9/15 Dil:50ul/50ml sample preserved in lab	NA	CE52244	CYE0307	MD		
HI051115	M4520972	100		NA	CE52244	CYE0307	MD		
HI051115	M4520973	10000	1/10 Dil: 5ul/50ml Oil preserved in lab	NA	CE52244	CYE0307	MD		
HI051115	M4520974	10000	1/10 Dil: 5ul/50ml Oil preserved in lab	NA	CE52244	CYE0307	MD		
HI051115	M4520975	10000	1/10 Dil: 5ul/50ml Oil preserved in lab	NA	CE52244	CYE0307	MD		
HI051115	M4520976	10000	1/10 Dil: 5ul/50ml Oil preserved in lab	NA	CE52244	CYE0307	MD		
HI051115	M4520977	10000	1/10 Dil: 5ul/50ml Oil preserved in lab	NA	CE52244	CYE0307	MD		
HI051115	M4520978	10000	1/10 Dil: 5ul/50ml Oil preserved in lab	NA	CE52244	CYE0307	MD		

Acetone(H-BS1)>30%.

)% are on Linear Regression.
due to failed spectra/retention time-MD

Review (includes a check and review of manual integrations)

CLD 5/26/15

Uncontrolled Document

This page has been deleted

Uncontrolled Document

Attachment C

Sample Bottle Prep Procedure for
Low Level VOC's in Soil
(Method 5035)

Number Of Vials Per Sample: 2 preserved + 1 non-preserved
(Each batch of samples must also include a trip blank)

Preserved Vials:

1) Obtain two VOA vials for each sample.

2) Add the following to each VOA vial:

   a. A small stir bar
   b. 5 ml of organic free water.

3) Cap the vials

4) Place a label on each vial.

5) Label each preserved vial "LL 5035"

6) Weigh each capped and labeled vial.

7) Record the weight of each vial in the appropriate logbook.

8) Assign a tracking number to each vial.

Non-Preserved Vial:

1) Obtain a clean VOA vial.

2) Attach a label and cap.

3) Label vial "% Solids"

Trip Blank: A trip blank consists of a preserved vial labeled "Trip Blank".

Other Equipment:

1) A cut 10 ml syringe should accompany each sample. (Not each vial)

2) The following is supplied if requested:

   a. An EnCore sampler to accompany each preserved vial.
   b. A cooler.
   c. C.O.C's
   d. Ice Packs

Attachment D

ESS Laboratory VOC 5035 Low Level Sample Collection Procedure

- Number of Vials: **2 per sample**
- **Vial Description:** Pre-weighed VOA vial with 5ml water and a stir bar.
- **Sampling Device:** One Cut Syringe per sample location
- **Sampling Procedure:**
  - Push the cut syringe into the soil until the syringe is filled between the 4 and 5 ml marks. (This is approximately 5 grams of soil)
  - Remove the syringe containing the soil.
  - Wipe the exterior of the syringe clean.
  - Use the plunger to deposit the contents of the syringe into the preserved VOA vial.
  - Immediately cap the vial.
  - Use a new cut syringe for each new sample location.
- **Sample Shipping:**
  - Samples must be kept cool with ice or ice packs ($4 \pm 2^{\circ}$ C)
  - A Low Level **Trip Blank** must accompany each batch of low-level samples. A Trip Blank is a VOA vial with 5mls water and a stir bar. No soil is added.
  - Samples must be frozen upon receipt at laboratory

For additional information call ESS Laboratory: 401–461-7181

Attachment E

Sample Bottle Prep Procedure for High Level VOC's in Soil (Methanol) (Method 5035)

Number Of Vials Per Sample: 1 preserved + 1 non-preserved (Each batch of samples must also include a trip blank)

Preserved Vials:

- Obtain a VOA vial for each sample.
- Add 15 ml of VOA grade methanol to each VOA vial.
- Cap the vial
- Place a label on each vial.
- Label each preserved vial "5035 MeOH"
- Weigh each capped and labeled vial.
- Record the weight of each vial in the appropriate logbook.
- Assign a tracking number to each vial.
- Make a mark on each preserved vial to indicate where the methanol level should be when approximately 15 grams of soil is added.

Non-Preserved Vial:

- Obtain a clean VOA vial.
- Attach a label and cap.
- Label vial "% Solids"

Trip Blank: A trip blank consists of a preserved vial labeled "Trip Blank".

Other Equipment:

The following is supplied if requested:

- Cooler.
- Chain of custody forms (COC)
- Ice Packs

Attachment F

ESS Laboratory VOC 5035 High Level Sample Collection Procedure

- Number of Vials: **1 per sample**
- **Vial Description:** Pre-weighed VOA vial with 15ml methanol and a meniscus mark.
- **Sampling device:** Scoopula or similar spatula
- **Sampling Procedure:**
  - Use the scoopula to add approximately 15 grams of soil to the vial. When approximately 15 grams of soil is in the vial the level of methanol will be even with the drawn meniscus mark.
  - Wipe off any soil that may be on the threads of the vial then immediately cap the vial.

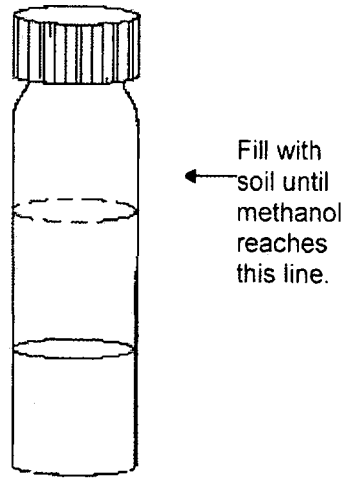

- **Sample Shipping:**
  - Samples must be kept cool with ice or ice packs (4 ± 2°C)
  - A High Level **Trip Blank** must accompany each batch of high level samples. A Trip Blank is a VOA vial with 15mls methanol without soil.

Percent Solids Determination

- The percent solids must to be determined for each sample location.
- **Vial Description: VOA** vial with no preservative.
- **Sampling Device:** Scoopula or similar spatula

Sampling Procedure: Use the scoopula to fill the VOA vial ¾ full. Immediately cap the vial.

Uncontrolled Document

Attachment G

Summary of Method Quality Objectives for Method 5035/8260B5
Volatile Organic Compounds

Frequency	Target Analyte/Surrogate	Corrective action
Every twelve hours	Criteria in Section 11.1.	Suspend analysis until criteria met.
Instrument set up. Each time the ICV or CCV can not meet criteria.	RSD≤15%, R≥0.995,R^2≥0.99 Do not force through origin	Recalibrate as required.
Immediately following initial calibration. Second source from Ical	%Rec = 70-130%	Re-analyze once, if still fails criteria re-calibrate.
At the beginning of each analytical sequence. No more than 20 samples or 12 hours between CCVs.	CCCs must be < 20%, all other analytes < 30% drift or difference.	Re-analyze once, if still fails criteria re-calibrate.
At the beginning of each analytical sequence. Prepared using source different than that used to prepare initial calibration standards and contain all target analytes.	%Rec = 70-130% ≤ 25% drift or difference.	Re-analyze once, if still fails criteria re-calibrate.
One per analytical batch of 20 or fewer samples.	Analytes < ½ MRL (DCM≤ MRL)	See Section 11.0. Report nonconformance in case narrative.
1 per 20 samples. Should be spiked with the same solution as the BS.	% Rec = 70-130%, ≤ 30% RPD	Check BS, if BS is within criteria then report non-conformance in project narrative. If BS fails, then re-analyze.
Added to all samples and standards.	%Rec = 70-130%	If one or more is outside criteria, then re-analyze sample unless an obvious interference is present (UCM).
Added to all samples and standards.	50-200% of area counts in the associated continuing calibration standard.	If one or more is outside criteria, then re-analyze sample unless an obvious interference is present (UCM).

MASTER

Attachment H

Performing Matrix Spike (MS) and Matrix Spike Duplicate Analyses (MSD) for Methanol-Preserved Soil/Sediment Samples under the MCP

a. An unpreserved aliquot of soil/sediment sample must be thoroughly homogenized.

b. Place a 5 g aliquot of homogenized soil in each of three (3) pre-tared 40-ml VOA vials. Record the weights of the vials with and without sample in the VOA sample weight logbook.

c. Cap each vial ensuring that soil particles are not entrained on the vial threads.

d. Without exposing the sample aliquot to the atmosphere, prepare an un-spiked sample, designated **C0**, by adding 5 ml of purge and trap grade methanol through the septum of the vial. Tap and agitate the sample vial.

Note: This sample may only be used to determine the residual concentration in the laboratory-homogenized sample and is not representative of the contaminant concentration at the location where the field sample was collected.

e. Without exposing the sample aliquot to the atmosphere, prepare two (2) separate spiked samples, designated **Cx1** and **Cx2**, by adding 0.5 ml of the MS standard to each of the remaining pre-tared VOA vials.

f. Allow vials **Cx1** and **Cx2** to equilibrate for at least 30 minutes. After the equilibration period, bring the final solvent volume in vials **Cx1** and **Cx2** up to 5ml by adding purge and trap grade methanol through the septum of each vial.

g. Proceed with analysis for high-level VOCs using methanol preservation. **Vials may not be opened until soils are completely immersed in methanol.**

h. Record the results for **C0** (unspiked sample), **Cx1** (method spike), and **Cx2** (method spike duplicate). Calculate and report the RPD and %R for the subject sample matrix. It should be noted that this procedure might result in the loss of VOCs from the native sample during the homogenization step. However, the intent of this procedure is solely to determine matrix effects and not to measure the actual concentrations present in the native sample.

Attachment J

ESS Laboratory VOC 5035

Encore Sample Collection, Storage and Preparation Procedure

Encore™® or Equivalent Sampling Device for low or high level analysis: Method 5035 contains an option with a proprietary device called an Encore™® sampler. This is a special, one use, EPA approved sampling device that allows the sampler to collect and transport samples to the laboratory without preserving in the field. The Encore™® sampler is a device made of an inert composite polymer, designed to collect, store and deliver soil in a sealed, headspace-free state. In order to collect the sample the Encore™® sampler is attached to a reusable T-handle that serves to assist in pushing the sampler in the soil. An airtight sealing cap is then attached creating a self-contained package. Generally, 3 Encore™® samplers are required for each sample providing the laboratory with 2 for low level analysis and 1 for high level analysis. The devices are transported to the laboratory on ice where the cap is opened and the undisturbed sample is immediately placed in the appropriate preservation fluid, methanol or low level vials containing water. This preservation step must currently take place within 48 hours of sample collection.

ESS Laboratory has two options for meeting method 5035A sampling and preservation requirements.

Option 1 (The option preferred by ESS Laboratory)
Sample collection will require the following:

- 2 pre-weighed vials containing a small magnetic stir bar and 5mls DI water for low level analysis.
- 1 pre-weighed vial for medium-high level analysis containing 15 mls of methanol.
- 1 four ounce jar for percent total solids determination.
- Methanol is flammable. If samples will be shipped to the laboratory via couriers such as, UPS or Federal Express, DOT labeling requirements must be met. Contact the lab for additional information concerning labeling requirements.

Option 2
Sample collection using *EnCore™* samplers will require:

- 2 EnCore™ 5g samplers for low level analysis
- 1 EnCore™ 5g sampler for medium-high level analysis
- 1 four ounce jar for percent total solids determination
- T-handle for sampling

Uncontrolled Document

Encore Sampling Procedure:

Disposable En Core® Sampler Sampling Procedures

NOTE:

1. En Core Sampler is a Single Use device. It cannot be cleaned and/or reused.

2. En Core Sampler is designed to store soil. Do not use En Core Sampler to store solvent or free product!

3. En Core Sampler must be used with En Core® T-Handle and/or En Core® Extrusion Tool exclusively. (These items are sold separately.)

Using The En Core® T-Handle

Before Taking Sample:
1. Hold coring body and push plunger rod down until small o-ring rests against tabs. This will assure that plunger moves freely.

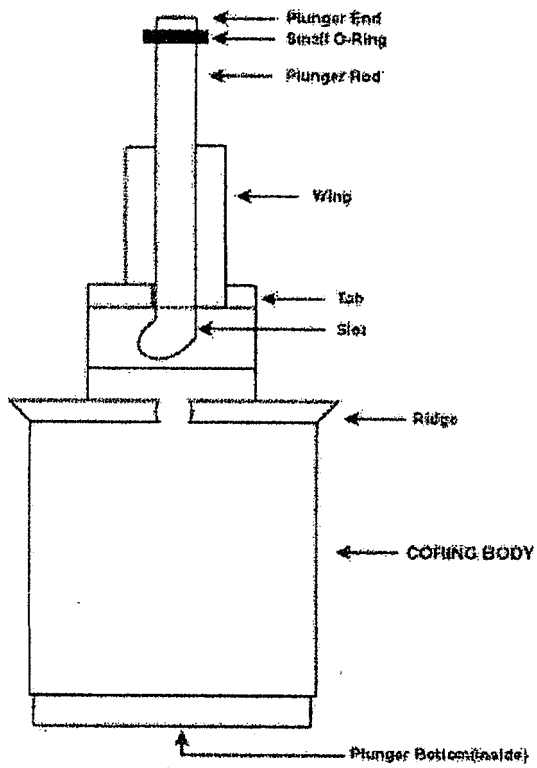

Click to view larger image.

2. Depress locking lever on En Core T-Handle. Place coring body, plunger end first, into open end of T-Handle, *aligning the (2) slots on the coring body with the (2) locking pins in the T-Handle.* Twist coring body clockwise to lock pins in slots. Check to ensure Sampler is locked in place. Sampler is ready for use.

Taking Sample:

3. Turn T-Handle with T-up and coring body down. This positions plunger bottom flush with bottom of coring body (ensure that plunger bottom is in position). Using T-Handle, push Sampler into soil until coring body is completely full. When full, small o-ring will be centered in T-Handle viewing hole. Remove Sampler from soil. Wipe excess soil from coring body exterior.

4. Cap coring body while it is still on T-handle. Push cap over flat area of ridge. ***Push and twist cap to lock arm in place. Cap must be seated to seal sampler (see diagram below).***

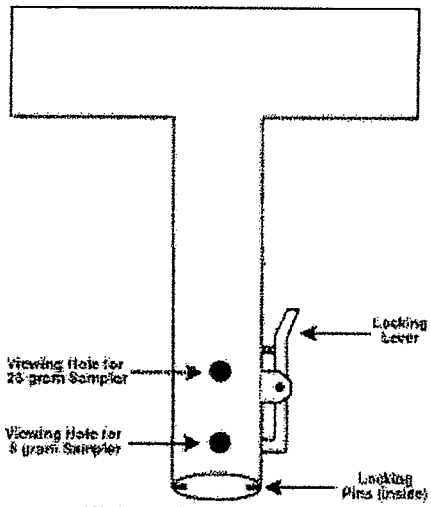

Click to view larger image

Sampler Correctly Capped
Locking arm grooves seated over coring body ridge.

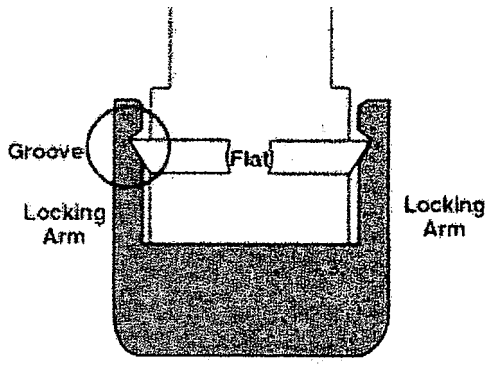

Sampler Incorrectly Capped
Cap appears crooked; locking arm grooves not fully seated over coring body ridge

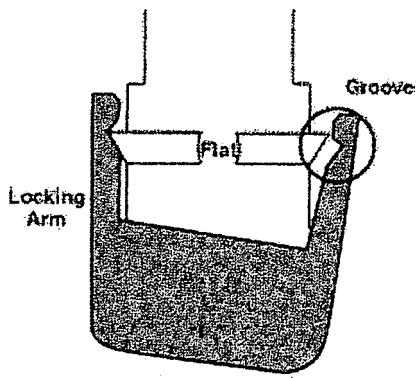

Preparing Sampler For Shipment:

5. Remove the capped Sampler by depressing locking lever on T-Handle while twisting and pulling Sampler from T-Handle.

6. Lock plunger by rotating extended plunger rod fully counter-clockwise until wings rest firmly against tabs (see plunger diagram at right).

7. Attach completed label (from En Core Sampler bag) to cap on coring body.

8. Return full En Core Sampler to zipper bag. Seal bag and put on ice.

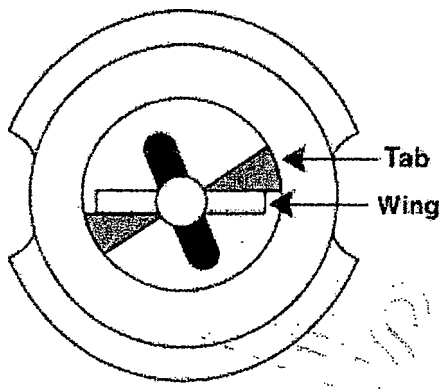

Download PDF of Directions

Encore Sample Prep:

Since samples must be preserved within 48 hours of sampling, samples are transferred into preserved vials upon receipt. Laboratory preservation is documented on the cooler receipt checklist.

Sample Extrusion Procedure with Extrusion Tool:

Disposable En Core® Sampler Extrusion Procedure
Using The En Core® Extrusion Tool

- 1. Use a pliers to break locking arms on cap of En Core Sampler. ***Do not remove cap at this time. (CAUTION: Broken edges will be sharp.)***
- 2. To attach En Core Sampler to En Core Extrusion Tool: Depress locking lever on Extrusion Tool and place Sampler, plunger end first, into open end of Extrusion Tool, ***aligning slots on coring body with pins in Extrusion Tool.*** Turn coring body clockwise until it locks into place. Release locking lever.
- 3. Rotate and gently push Extrusion Tool plunger knob clockwise until plunger slides over wings of coring body. (When properly positioned plunger will not rotate further.)
- 4. Hold Extrusion Tool with capped Sampler pointed upward so soil does not fall out when cap is removed. To release soil core, remove cap from Sampler and push down on plunger knob of En Core Extrusion Tool. Remove and properly dispose of En Core Sampler.

The 5 gram soil sample is released into one of the following vials:

1. **Low Level VOC analysis:** 5 grams released into a 40ml VOA vial containing a small stir bar and 5ml DI water. If sample is not being analyzed that day, the vials are stored frozen in a freezer at <5C. Two vials required. One vial is a backup for reanalysis or confirmation.

2. **Med-High Level VOC analysis:** 5 grams released into a 40ml VOA vial containing 5ml of MEOH. If sample is not being analyzed that day, the vials are stored in a refrigerator at 4 +/- 2C. One vial required.

3. **GRO analysis:** : 5 grams released into a 40ml VOA vial containing 5ml of MEOH. If sample is not being analyzed that day, the vials are stored in a refrigerator at 4 +/- 2C. One vial required.

Uncontrolled Document

Specific QC Requirements and Performance Standards for VOCs (SW-846 8260B) Using WSC-CAM-II A

Quality / ective	Required Performance Standard	Required Deliverable?	Rejection Criteria per WSC-07-350	Required Corrective Action	Required Analytical Response Action
Analytical Precision	(1) Must be performed prior to using method on samples. (2) Must be performed for each matrix. (3) Must contain all target analytes. (4) Must follow procedure in Section 8.4 of SW-846 8000B.	No	NA	Refer to Section 8.4 of SW-846 8000B and Section 1.1.2 of this protocol.	NA
tory & ty	(1) Criteria listed in Table 4 of SW-846 8260B (the same criteria must be used for all analyses). (2) Every 12 hours prior to sample analysis.	No	NA	Perform instrument maintenance as necessary; retune instrument.	Suspend all analyses until tuning non-compliance is rectified.
Analytical	(1) Must be analyzed at least once prior to analyzing samples, when initial calibration verification or continuing calibration does not meet the performance standards, and when major instrument maintenance is performed. (2) Minimum of 5 standards (or 6 if non-linear regression used). (3) Low standard must be ≤RL. (4) %RSD ≤20, r ≥0.99 (linear regression), or r^2 ≥0.99 (non-linear regression) for each target analyte. (5) If %RSD >20, linear or non-linear regression must be used. (6) Minimum RFs as per Table 4 of SW-846 8260C for lowest concentration standard and for average RF. (7) Must contain all target analytes. (8) Calibration must be performed under the same conditions as the samples (e.g., heated purge). (9) If autosampler used to spike surrogates in calibration standards, one-point	No	RF <0.05; affects nondetect results for affected analyte in all samples analyzed under this initial calibration.	(1) Recalibrate if >10% of target analytes exceed %RSD, "r", or "r^2" criteria. (2) If ≤10% of compounds exceed criteria, recalibration is not required as long as %RSD <40, r >0.98, or r^2 >0.98. (3) If recalculated concentrations from the lowest calibration standard are outside of 70-130% recovery range, either: * The RL must be reported as an estimated value[2], or * The RL must be raised to the concentration of the next highest calibration standard that exhibits acceptable recoveries when recalculated using the final calibration curve.	Sample analysis cannot proceed without a valid initial calibration. Report non-conforming compounds (%RSD >20, r <0.99, r^2 <0.99 or minimum RF not met) in laboratory narrative. If non-linear regression (i.e., quadratic equation) is used for calibration, this must be noted in the laboratory narrative along with the compounds affected.

Specific QC Requirements and Performance Standards for VOCs (SW-846 8260B) Using WSC-CAM-II A

Quality ective	Required Performance Standard	Required Deliverable?	Rejection Criteria per WSC-07-350[1]	Required Corrective Action	Required Analytical Response Action
	calibration with 5 standards acceptable for surrogates. (10) If linear or non-linear regression used, verify the RL by recalculating concentrations in lowest calibration standard using the final calibration curve; recoveries must be 70-130%. (11) SIM: Laboratory must monitor a minimum of two ions per analyte (the primary ion or quantitation ion and a minimum of one confirmation ion); this is required for all target analytes, surrogates and internal standards.				
nalytical	(1) Immediately after each initial calibration. (2) Concentration level near midpoint of curve. (3) Prepared using standard source different than used for initial calibration. (4) Must contain all target analytes. (5) Percent recoveries must be between 70-130% for target analytes except for "difficult" analytes[**] which must exhibit percent recoveries between 40-160%.	No	NA	Locate source of problem; recalibrate if >10% of all analytes are outside of criteria.	If recovery is outside of 70-130% for any analyte, including "difficult" analytes[**], report non-conforming compounds in laboratory narrative.
nalytical	(1) Every 12 hours prior to the analysis of samples. (2) Concentration level near midpoint of curve. (3) Must contain all target analytes. (4) %D must be ≤20 for each target analyte. (5) Minimum RFs as per Table 4 of SW-846 8260C. (6) Area counts of internal standards in continuing calibration must be between 50 – 200% of the area counts in the associated mid-level initial calibration	No	RF <0.05; affects nondetect results for affected analyte in all samples analyzed under this continuing calibration.	(1) Recalibrate if >20% of target analytes exceed %D criteria. (2) If internal standard is outside of criteria, locate source of problem and reanalyze the continuing calibration. (3) If ≤20% of compounds exceed criteria, recalibration is not required as long as %D	Report non-conforming compounds (%D >20 or minimum RF not met) and associated samples in laboratory narrative.

Specific QC Requirements and Performance Standards for VOCs (SW-846 8260B) Using WSC-CAM-II A

Quality ective	Required Performance Standard	Required Deliverable?	Rejection Criteria per WSC-07-350	Required Corrective Action	Required Analytical Response Action
	standard.			<40.	
Method ion	(1) Every 20 samples prior to sample analysis and after calibration standards. (2) Matrix and preservative-specific (e.g., water, methanol). (3) Target analytes must be <RL except for common laboratory contaminants (acetone, methylene chloride, and MEK) which must be <5x the RL.	Yes	NA	(1) If concentration of contaminant in sample is <10x concentration in blank, locate source of contamination; correct problem; reanalyze method blank and associated samples. (2) No corrective action required if concentration of contaminant in sample is >10x concentration in blank or if contaminant not detected in sample.	(1) If sample reanalysis is not possible, report non-conformance in laboratory narrative. (2) If contamination of method blanks is suspected or present, the laboratory, using a "B" or some other convention, should qualify the sample results. Blank contamination should also be documented in the laboratory narrative. (3) If re-analysis is performed within holding time and yields acceptable method blank results, the laboratory may report results of the re-analysis only. (4) If re-analysis is performed outside of holding time, the laboratory must report results of both the initial analysis and re-analysis.
nalytical	(1) Every 20 samples or for each new tune clock, whichever is more frequent.	Yes	Recovery <10%; affects nondetect	(1) Locate source of problem; reanalyze LCS	(1) If sample reanalysis is not possible, report non-

Specific QC Requirements and Performance Standards for VOCs (SW-846 8260B) Using WSC-CAM-II A

Quality ective	Required Performance Standard	Required Deliverable?	Rejection Criteria per WSC-07-350	Required Corrective Action	Required Analytical Response Action
	(2) Concentration level near midpoint of curve. (3) Must contain all target analytes. (4) Matrix and preservative-specific (e.g., water, methanol). (5) Percent recoveries must be between 70-130% for target analytes except for "difficult" analytes[**] which must exhibit percent recoveries between 40-160%. (6) Can also be used as continuing calibration. NOTE: If used as continuing calibration standard, must be evaluated using Performance Standards, Corrective Actions, and Analytical Response Actions listed above for Continuing Calibration.		results for affected analyte in all samples analyzed under the LCS.	and associated samples if >10% of all analytes are outside of criteria. (2) If ≤10% of compounds are outside of the acceptance criteria, reanalysis is not required as long as recoveries are >10%. (3) If >10% of compounds are above the acceptance criteria (>130%), reanalysis is not required if affected compounds were not detected in associated samples.	conformance in laboratory narrative. (2) If recovery is outside of 70-130% for any analyte, including "difficult" analytes[**], report non-conforming compounds in laboratory narrative. (3) If re-analysis is performed within holding time and yields acceptable LCS results, the laboratory may report results of the re-analysis only. (4) If re-analysis is performed outside of holding time, the laboratory must report results of both the initial analysis and re-analysis.
Analytical Precision	(1) Every 20 samples or for each new tune clock, whichever is more frequent. (2) Concentration level near midpoint of curve. (3) Must contain all target analytes. (4) Matrix and preservative-specific (e.g., water, methanol). (5) Percent recoveries must be between 70-130% for target analytes except for "difficult" analytes[**] which must exhibit percent recoveries between 40-160%. (6) Recommended to be run immediately after LCS in analytical sequence. (7) RPDs must be ≤20 for waters and solid.	Yes	Recovery <10%; affects nondetect results for affected analyte in all samples analyzed under this LCS.	(1) Locate source of problem; reanalyze LCS and associated samples if >10% of all analytes are outside of the recovery acceptance criteria. (2) If ≤10% of compounds are outside of the recovery acceptance criteria, reanalysis is not required as long as recoveries are ≥10%. (3) If >10% of compounds are above the recovery acceptance criteria (>130%), reanalysis is not	(1) If sample reanalysis is not possible, report non-conformance in laboratory narrative. (2) If recovery is outside of 70-130% for any analyte, including "difficult" analytes[**] or RPD >20 for any analyte, including "difficult" analytes**, report non-conforming compounds in laboratory narrative. (3) If re-analysis is performed within holding

Specific QC Requirements and Performance Standards for VOCs (SW-846 8260B) Using WSC-CAM-II A

Quality ective	Required Performance Standard	Required Deliverable?	Rejection Criteria per WSC-07-350	Required Corrective Action	Required Analytical Response Action
				required if affected compounds were not detected in associated samples.	time and yields acceptable LCS results, the laboratory may report results of the re-analysis only. (4) If re-analysis is performed outside of holding time, the laboratory must report results of both the initial analysis and re-analysis.
ɛuracy & Sample	(1) Every 20 samples (at discretion of laboratory or at request of data user). (2) Matrix-specific. (3) Concentration level near midpoint of curve. (4) Must contain all target analytes. (5) Percent recoveries between 70 – 130%. (6) RPDs ≤20 for waters and ≤30 for solids.	Yes ONLY when requested by the data user	Recovery <10%; affects nondetect result for affected analyte in unspiked sample only.	Check LCS; if recoveries are acceptable in LCS, narrate non-conformance.	Note exceedances in laboratory narrative.
ɛuracy in rix	(1) Minimum of 3 surrogates, at retention times across GC run. (2) Percent recoveries must be between 70-130% for individual surrogate compounds.	Yes	Recovery <10%; affects all nondetect VOC results in affected sample.	If one or more surrogates are outside of limits, reanalyze sample unless one of the following exceptions applies: (1) Obvious interference present (e.g., UCM). NOTE: If obvious interference is present and surrogate recovery would cause rejection of data (i.e., <10%), reanalyze sample on dilution. (2) Methanol-preserved samples: re-analysis is not	(1) Report recoveries outside of 70-130% in laboratory narrative. (2) If reanalysis yields similar surrogate non-conformances, the laboratory must report results of both analyses. (3) If reanalysis is performed within holding time and yields acceptable surrogate recoveries, the laboratory may report results of the reanalysis only.

Specific QC Requirements and Performance Standards for VOCs (SW-846 8260B) Using WSC-CAM-II A

Quality ective	Required Performance Standard	Required Deliverable?	Rejection Criteria per WSC-07-350	Required Corrective Action	Required Analytical Response Action
				required if % moisture >25 and surrogate recovery is >10%. (3) If one or more surrogates exhibit high recoveries and target analytes are not detected in sample, reanalysis is not required.	(4) If reanalysis is performed outside of the holding time and yields acceptable surrogate recoveries, the laboratory must report results of both analyses. (5) If sample is not re-analyzed due to obvious interference, the laboratory must provide the chromatogram in the data report.
Analytical curacy in trix	(1) Minimum of 3 at retention times across GC run. (2) Area counts in samples must be between 50 – 200% of the area counts in the associated continuing calibration standard. (3) Retention times of internal standards must be within ±30 seconds of retention times in associated continuing calibration standard.	No	Recovery <20%; affects all nondetect results quantitated using affected internal standard in associated sample.	If one or more internal standards are outside of limits, reanalyze sample unless obvious interference present (e.g., UCM). NOTE: If obvious interference is present and internal standard area would cause rejection of data (i.e., <20%), reanalyze sample on dilution.	(1) Report nonconformances in laboratory narrative. Include actual recovery of internal standard and provide summary of analytes quantitated using the internal standard. (2) If reanalysis yields similar internal standard non-conformances, the laboratory must report results of both analyses. (3) If reanalysis is performed within holding time and yields acceptable internal standard recoveries, the laboratory may report results of the reanalysis only. (4) If reanalysis is performed outside of the holding time and yields

Specific QC Requirements and Performance Standards for VOCs (SW-846 8260B) Using WSC-CAM-II A

Quality ective	Required Performance Standard	Required Deliverable?	Rejection Criteria per WSC-07-350	Required Corrective Action	Required Analytical Response Action
					acceptable internal standard recoveries, the laboratory must report results of both analyses. (5) If sample is not reanalyzed due to obvious interference, the laboratory must provide the chromatogram in the data report.
'A	(1) Quantitation must be based on internal standard calibration. (2) The laboratory must use the average response factor, linear or non-linear regression curve generated from the associated initial calibration for quantitation of each analyte. (3) The internal standard used for quantitation must be the one nearest the retention time of the subject analyte. (4) Results must be reported with 2 or more "significant figures" if ≥RL. If reporting values below the RL, report with 1 or more "significant figures".[3]	NA	NA	NA	NA
A	Refer to SW-846 8260B, Section 7.6.	NA	NA	NA	NA
A	(1) The laboratory must only report values ≥ the sample-specific reporting limit; optionally, values below the sample-specific reporting limit can be reported as estimated, if requested. The laboratory must report results for samples and blanks in a consistent manner. (2) Dilutions: If diluted and undiluted analyses are performed, the laboratory	NA	NA	NA	(1) Qualification of the data is required if reporting values below the sample-specific reporting limit. (2) Complete analytical documentation for diluted and undiluted analyses must be made available for review

Specific QC Requirements and Performance Standards for VOCs (SW-846 8260B) Using WSC-CAM-II A

Quality ective	Required Performance Standard	Required Deliverable?	Rejection Criteria per WSC-07-350	Required Corrective Action	Required Analytical Response Action
	should report results for the lowest dilution within the valid calibration range for <u>each</u> analyte. The associated QC (e.g., method blanks, surrogates, etc.) for each analysis must be reported. (3) Refer to Section 3.3, TICs by GC/MS, for guidance. (4) All soil/sediment sample results preserved in methanol must be corrected for the methanol dilution as per Section 3.2.1 of this CAM protocol. (5) Results for soils/sediments must be reported on a dry-weight basis for comparison to MCP regulatory standards. (6) Refer to Appendix II A-1 for chain-of-custody requirements regarding preservation, cooler temperature, and holding times.				during an audit. (3) TICs will be evaluated at the discretion of the data user consistent with the guidelines presented in Appendix II A–3. (4) The performance of dilutions must be documented in the laboratory narrative or on the report form. Unless due to elevated concentrations of target compounds, reasons for dilutions must be explained in the laboratory narrative. (5) If samples are not properly preserved (pH >2 for aqueous samples, solid samples not completely covered with appropriate preservative) or are not received with an acceptable cooler temperature, note the non-conformances in the laboratory narrative. (6) If samples are preserved and/or analyzed outside of the holding time, note the non-conformances in the laboratory narrative.

: acetone, methyl ethyl ketone, 4-methyl-2-pentanone, 2-hexanone, dichlorodifluoromethane, bromomethane, chloromethane, and 1,4-dioxane.
'WSC-07-350, *MCP Representativeness Evaluations and Data Usability Assessments*, September 2007, if these results are observed, data users should consider nondetect as estimated with a significant low bias.
ble recovery of the lowest standard, the CAM RL has not been achieved; Question G of the "MassDEP MCP Analytical Protocol Certification Form" must be answered

Specific QC Requirements and Performance Standards for VOCs (SW-846 8260B) Using WSC-CAM-II A

Quality ective	Required Performance Standard	Required Deliverable?	Rejection Criteria per WSC-07-350	Required Corrective Action	Required Analytical Response Action

laboratory narrative.

es" is a policy decision included for standardization and consistency for reporting of results and is not a definition of "significant" in the scientific or mathematical sense.

ements

cific QA/QC Requirements and Performance Standards for Method 8260*

ty	Required Performance Standard	Required Deliverable	Recommended Corrective Action	Analytical Response Action
1	1) Criteria listed in Table 4 of SW-846 Method 8260 (the same criteria must be used for all analyses) 2) Every 12 hours	NO	Perform instrument maintenance as necessary; retune instrument	Suspend all analyses until tuning non-compliance is rectified.
uracy	1) Minimum of 5 standards. (Note 1). Single point calibration allowed for surrogates. 2) Low standard must be ≤ reporting limit (RL) 3) % RSD ≤ 15 or "r" ≥ 0.990 for all compounds except CCC's, which must be ≤ 30% RSD or "r" ≥ 0.990 4) Must contain all target analytes 5) If regression is used, must not be forced through the origin. 6) Minimum RF for all compounds 0.05.	NO	Recalibrate as required by method (1) if any of CCC %RSDs or if any one of CCC "r" <0.990 or (2) if >20% of remaining analytes have %RSD >30 or "r" < 0.990.	Sample analysis cannot proceed without a valid initial calibration. Report non-conforming compounds in case narrative. If the average response factor or linear regression are not used for quantitation (e.g. use of a quadratic equation), this must be noted in narrative with a list of affected analytes.
uracy	1) Each ICAL must be verified against a second source standard. 2) Std should be at mid-point 3) All target analytes present	NO	1) Compounds must recover within 80-120% 2) Laboratories are allowed to have 20% of compounds out, as long as all compounds within recover 65-135%	1) Perform maintenance as needed, recalibrate. 2) Note outliers in narrative.
uracy	1) Every 12 hrs prior to analysis of samples 2) Concentration level near midpoint of curve 3) Must contain all target analytes 4) Percent difference or percent drift (%D) must be ≤20 for CCCs and should be ≤30 for all other compounds.	NO	Recalibrate as required by method (1) if %D of any CCC >20 or (2) If %D of >10% of other analytes >30.	Report non-conforming compounds in case narrative.

MASTER

1A Specific QA/QC Requirements and Performance Standards for Method 8260* (continued)

Quality ective	Required Performance Standard	Required Deliverable	Recommended Corrective Action	Analytical Response Action
y ation n	1) Every 12-hrs shift or 20 samples, whichever is more frequent, prior to sample analysis and after calibration standards. 2) Matrix and preservative-specific (e.g. water, MeOH, NaHSO4) 3) Target analytes must be <RL except for common lab contaminants which must be <3x the RL (Contaminants are acetone, methylene chloride, and 2-butanone)	YES	Locate source of contamination and correct problem. Reanalyze method blank.	1) Report non-conformances in case narrative. 2) All results for compounds present in method blank must be "B" flagged if detected in samples associated with the method blank.
y Method	1) Every 20 samples/matrix or for each new tune clock, whichever is more frequent. 2) Concentration level must be near or at the mid-point of the initial calibration. 3) Must contain all target analytes 4) Matrix and preservative specific (e.g. water, MeOH, NaHSO4) 5) Laboratory determined percent recoveries must be between 70-130% for target compounds 6) Can also be used as CCAL 7) Lab may have up to 10% of compounds out of criteria as long as within 40-160% recovery. 8) Laboratories may spike blank soil or water for LCS (No 2nd source requirement)	YES	Recalculate the percent recoveries Reanalyze the LCS Locate & correct problem, reanalyze associated samples	1) Report non-conformances in case narrative. 2) Individual laboratories must identify and document problem analytes which routinely fall outside the 70-130% limit. Any exceedances must be noted in narrative. Data to support laboratory problem compounds kept on file at lab for review during audit
ccuracy in atrix ecision in atrix	1) Every 20 samples (Site specific MS/MSD's are strongly recommended 2) Matrix Specific, not required for trip blanks or field blanks 3) Must contain all target analytes 4) Laboratory determined percent recoveries should be between 70-130% for target compounds 5) RPD's should be ≤ 30% 6) Field blanks, trip blanks, etc. cannot be used for MS/MSD's.	YES (When requested)	Compare to LCS recoveries, narrate any non-conformances	Report non-conformances in case narrative

MASTER

1A Specific QA/QC Requirements and Performance Standards for Method 8260* (continued)

Quality ective	Required Performance Standard	Required Deliverable	Recommended Corrective Action	Analytical Response Action
in Sample	1) A minimum of 3 surrogates must be added to all samples, blanks, etc prior to sample introduction 2) Evaluate recoveries in each sample 3) Laboratory determined percent recoveries must be between 70-130% for individual surrogate compounds. Laboratory determined recovery limits may be outside 70-130% limits for difficult matrices (e.g. waste, sludges, etc) 4) Single point calibration allowed allowed for surrogates. See Note 1	YES	If one or more surrogates are outside limits, reanalyze the sample unless one of the following exceptions occurs: 1) For methanol preserved samples reanalysis is not required if moisture >25% and recoveries are >10% 2) If one surrogate exhibits high recovery and associated target compounds are not detected in the sample, report data as is, no reanalysis required.	1) Note exceedances in narrative 2) If reanalysis confirms matrix interference, report both sets of results and note in narrative 3) If reanalysis performed in holding time and surrogate recoveries are in range, report only the compliant data 4) If reanalysis performed outside of holding time and surrogate recoveries are in range, report both sets of data, note in narrative
y l Accuracy od in Sample	1) Laboratory must use a minimum of 3 IS at retention times across the GC run 2) Area counts in samples must be within –50% to +100% of the area counts in the associated CCAL 3) Retention times of IS must be within ± 30 seconds of the IS retention times in the associated CCAL	NO	If any IS is outside the QC limits, reanalyze the sample	1) Note exceedances in narrative 2) If reanalysis confirms matrix interference, report both sets of results and note in narrative 3) If reanalysis performed in holding time and IS are in criteria, report only the compliant data 4) If reanalysis performed outside of holding time and IS are in criteria, report both sets of data, note in narrative

MASTER

1A Specific QA/QC Requirements and Performance Standards for Method 8260* (continued)

Quality ective	Required Performance Standard	Required Deliverable	Recommended Corrective Action	Analytical Response Action
	1) Quantitation must be based on IS calibration 2) The laboratory must use the average RF or linear regression from the initial calibration for quantitation of each analyte 3) The IS used for quantitation must be the IS nearest to the retention time of the target analyte.	N/A	N/A	1) If the average RF or linear regression was not used for analyte quantitation (e.g. quadratic equation), it must be noted in the narrative along with a list of affected analytes 2) Laboratories must supply example calculations for those cases where the average RF or linear regression was not used
	1) The laboratory should report only concentrations detected above the sample specific RL. 2) Concentrations below the reporting limit (RL) as "ND" with the reporting limit. 3) Dilutions: If diluted and undiluted analyses are performed, the laboratory should report results for both sets of data. Compounds which exceed the linear range should be flagged ("E" flag). Do not report more than 2 sets of data per sample. 4) If a dilution is performed, the highest detected analyte must be in the upper 60% of the calibration curve, unless there are non-target analytes whose concentrations are so high as to cause damage to the instrumentation or saturate the mass spectrometer. 5) Refer to Appendix A for guidance on reporting TIC's	N/A	N/A	1) Qualification of results reported below the RL is required. 2) Performance of dilutions must be documented in the case narrative 3) TIC's will be evaluated according to Appendix A.

MASTER

n of SW-846 Method 8260.
Mass Spectrometry

rd Deviation

r = Correlation Coefficient
RPD = Relative Percent Difference
CCC = Calibration Check Compound
N/A = Not Applicable

s include acetone, bromomethane, chloroethane, dichlorodifluoromethane, dibromochloromethane, hexachlorobutadiene, 2-tanone, and trichlorofluoromethane.

d for a quadratic equation calibration curve, and seven are required for a polynomial fit. In either case the correlation coefficient s may be calibrated using a single point, at the same concentration as added to all samples, blanks, etc.

MASTER

ESS Laboratory
Division of Thielsch Engineering
Cranston, RI

SOP NO. 20_8260B
VOLATILE ORGANIC COMPOUNDS
BY GAS CHROMATOGRAPHY/MASS SPECTROMETRY (GC/MS):
CAPILLARY COLUMN TECHNIQUE
(EPA Method 624/SW-846 METHOD 8260B)

APROVED BY:

Operation s Manager — Date 3/20/09

QA Manager — Date 3/20/09

Laboratory Director — Date 5/20/09

MASTER

Volatile Organic Compounds - by GC/MS Capillary Column Technique

1.0 SCOPE AND APPLICATION

1.1 This method describes the technique utilized by ESS Laboratory in the qualitative and quantitative analysis of volatile samples based on SW-846 Method 8260B. Following are compounds that may be determined by this method.

Appropriate Technique Analyte	Cas #[b]	Purge-and-Trap	Direct Injection
Acetone	67-64-1	Pp	a
Acrolein (Propenal)	107-02-8	Pp	a
Acrylonitrile	107-13-1	Pp	a
Allyl chloride	107-05-1	a	a
tert- Amyl methyl ether	994-05-8	a	a
Benzene	71-43-2	a	a
Bromobenzene	108-86-1	a	a
Bromochloromethane	74-97-5	a	a
Bromodichloromethane	75-27-4	a	a
4-Bromofluorobenzene	460-00-4	a	a
Bromoform	75-25-2	a	a
Bromomethane	74-83-9	a	a
2-Butanone (MEK)	78-93-3	Pp	a
n-Butylbenzene	104-51-8	a	a
sec-Butylbenzene	135-98-8	a	a
tert-Butylbenzene	98-06-6	a	a
Carbon disulfide	75-15-0	Pp	a
Carbon tetrachloride	56-23-5	a	a
Chlorobenzene	108-90-7	a	a
1-Chlorobutane	109-69-3	a	a
Chlorodibromomethane	124-48-1	a	a
Chloroethane	75-00-3	a	a
2-Chloroethyl vinyl ether	110-75-8	a	a
Chloroform	67-66-3	a	a
Chloromethane	74-87-3	a	a

MASTER

Chloroprene	126-99-8	a	a

Appropriate Technique Analyte	Cas #[b]	Purge-and-Trap	Direct Injection
2-Chlorotoluene	95-49-8	a	a
4-Chlorotoluene	106-43-4	a	a
Cyclohexane	110-82-7	a	a
1,2-Dibromo-3-chloropropane	96-12-8	Pp	a
1,2-Dibromoethane	106-93-4	a	a
Dibromomethane	74-95-3	a	a
1,2-Dichlorobenzene	95-50-1	a	a
1,3-Dichlorobenzene	541-73-1	a	a
1,4-Dichlorobenzene	106-46-7	a	a
Cis-1,4-Dichloro-2-butene	1476-11-5	a	a
trans-1,4-Dichloro-2-butene	110-57-6	Pp	a
Dichlorodifluoromethane	75-71-8	a	a
1,1-Dichloroethane	75-34-3	a	a
1,2-Dichloroethane	107-06-2	a	a
1,1-Dichloroethene	75-35-4	a	a
cis-1,2-Dichloroethene	156-59-2	a	a
trans-1,2-Dichloroethene	156-60-5	a	a
1,2-Dichloropropane	78-87-5	a	a
1,3-Dichloropropane	142-28-9	a	a
2,2-Dichloropropane	594-20-7	a	a
1,1-Dichloropropene	563-58-6	a	a
cis-1,3-Dichloropropene	10061-01-5	a	a
trans-1,3-Dichloropropene	10061-02-6	a	a
1,4-Difluorobenzene	540-36-3	a	a
Diethyl Ether	60-29-7	a	a
1,4-Dioxane	123-91-1	Pp	a
Ethylbenzene	100-41-4	a	A
Ethyl methacrylate	97-63-2	a	a
Ethyl tertiary-butyl ether	637-92-3	a	a
Hexachlorobutadiene	87-68-3	a	a
Hexachloroethane	67-72-1	i	a
2-Hexanone	591-78-6	Pp	a

ESS Laboratory. This document may be reproduced solely for internal use.

Appropriate Technique Analyte	Cas #[b]	Purge-and-Trap	Direct Injection
Iodomethane	74-88-4	a	a
Isopropylbenzene	98-82-8	a	a
Di-isopropyl ether	108-20-3	a	a
p-Isopropyltoluene	99-87-6	a	a
Methyl acetate	79-20-9	a	a
Methyl acrylate	96-33-3	a	a
Methylacrylonitrile	126-98-7	pp	a
Methyl Cyclohexane	108-87-2	a	a
Methylene chloride	75-09-2	a	a
Methyl methacrylate	80-62-6	a	a
4-Methyl-2-pentanone (MIBK)	108-10-1	pp	a
Methyl tertiary-butyl ether	1634-04-4	a	a
Naphthalene	91-20-3	a	a
2-Nitropropane	79-46-9	a	a
Pentachloroethane	76-01-7	i	a
n-Propylbenzene	103-65-1	a	a
Styrene	100-42-5	a	a
1,1,1,2-Tetrachloroethane	630-20-6	a	a
1,1,2,2-Tetrachloroethane	79-34-5	a	a
Tetrachloroethene	127-18-4	a	a
Toluene	108-88-3	a	a
1,2,3-Trichlorobenzene	87-61-6	a	a
1,2,4-Trichlorobenzene	120-82-1	a	a
1,3,5-Trichlorobenzene	108-70-3	a	a
1,1,1-Trichloroethane	71-55-6	a	a
1,1,2-Trichloroethane	79-00-5	a	a
Trichloroethene	79-01-6	a	a
Trichlorofluoromethane	75-69-4	a	a
1,2,3-Trichloropropane	96-18-4	a	a
1,1,2-Trichloro-1,2,2-trifluoroethane	76-13-1	a	a
1,2,4-Trimethylbenzene	95-63-6	a	a
1,3,5-Trimethylbenzene	108-67-8	a	a
Vinyl acetate	108-05-4	a	a
Vinyl chloride	75-01-4	a	a
o-Xylene	95-47-6	a	a

ESS Laboratory. This document may be reproduced solely for internal use.

m-Xylene	108-38-3	a	a
p-Xylene	106-42-3	a	a

a Adequate response by this technique.
b Chemical Abstract Services Registry Number.
i Inappropriate technique for this method
pp Poor purging efficiency results in high MDLs.

1.2 This method is used to determine volatile organic compounds in a variety of waste matrices. This method is applicable to nearly all types of samples, including ground water, aqueous sludge, caustic liquors, acid liquors, waste solvents, oily wastes, tars, fibrous wastes, emulsions, filter cakes, soils and sediments.

1.3 This method can be used to quantify most volatile organic compounds that have boiling points below 200°C and that are insoluble or slightly soluble in water. Volatile water-soluble compounds can be included in this analytical technique, however, for the more soluble compounds quantitation limits are approximately ten times higher because of poor purging efficiency.

1.4 The quantitation limit of this method for an individual compound is approximately 1µg/L for all aqueous matrices. The Quantitation limit for soil/sediment samples is listed in SOP 20_5035.

2.0 METHOD SUMMARY

2.1 This SOP provides gas chromatographic/mass spectrometric (GC/MS) conditions for the detection of volatile organic compounds.

2.2 This SOP describes a closed system purge and trap procedure for aqueous samples according to method 5030B.

2.2.1 Purged sample components are trapped in a tube containing suitable sorbent materials.

2.2.2 When purging is complete, the sorbent tube is heated and back-flushed with helium to desorb trapped sample components. The analytes are desorbed directly to a wide bore capillary column for analysis.

2.2.3 Wide-bore capillary columns require a jet separator, whereas narrow bore capillary columns can be directly interfaced to the ion source.

2.3 A temperature program is used in the gas chromatograph to separate the organic compounds. Detection is achieved using a mass spectrometer (MS).

2.4 Tentative identifications are obtained by analyzing standards under the same conditions used for samples and comparing resultant GC retention times. Absolute identifications are obtained by comparing the mass spectra of individual compounds to the reference spectra for that compound.

2.5 Concentrations of the identified components are measured by relating the response produced for that compound to the response produced by a compound that is used

ESS Laboratory. This document may be reproduced solely for internal use.

as an internal standard.

3.0 HEALTH AND SAFETY

3.1 Each employee has been trained and has acknowledged being trained in the safe use and handling of chemicals being used in the laboratory. This training has been performed according to the ESS Training SOP 80_0016 and by the Chemical Hygiene Plan SOP 90_0001 in conjunction with the Safety orientation

3.2 All sample and material handling should be done in a hood while using proper protective equipment to minimize exposure to liquid or vapor. Minimum personnel protective equipment includes the use of laboratory safety glasses, a lab coat or apron, and protective gloves.

3.3 The MSDSs for the concentrated chemicals used in the laboratory are kept on file in a central location that is available for all employees to review.

4.0 SAMPLE PRESERVATION, CONTAINERS, HANDLING AND STORAGE

4.1 Sample preservation for soil samples is discussed in SOP 20_5035. Aqueous samples are preserved with 1:1 HCl at a ratio of 100 µL to 40 ml.

4.2 Samples for analysis using this SOP must be stored in tightly sealed vials with Teflon-lined silicone septum seals in which the original sample was collected. All samples are stored in a refrigerator at 4 ± 2°C within the laboratory. The soil samples are stored in a separate refrigerator from the aqueous samples in the VOC laboratory. Samples for volatile analysis must be analyzed within 14 days of sample collection

4.3 Samples known to contain high concentrations of VOCs are stored in a separate refrigerator located in the sample storage room. This is to prevent cross contamination.

4.4 Trip blanks for aqueous samples are prepared with organic free water. The water comes from a carbon filtration system located in the VOA lab and is periodically checked for low level VOCs.

4.5 A trip blank should accompany each batch of 20 or less VOC samples. This trip blank must accompany the associated samples at all times.

4.6 Refrigerator blanks are prepared like trip blanks and stored in the refrigerator with samples. These blanks are analyzed weekly to check for possible cross contamination from samples. To prevent cross contamination from sample to sample, all sample containers must be airtight. If the blank is greater than the MRL, then notify operations manager immediately.

ESS Laboratory. This document may be reproduced solely for internal use.

5.0 INTERFERENCES AND POTENTIAL PROBLEMS

5.1 Major sources of contamination are volatile materials in the laboratory and impurities in the inert purging gas and in the sorbent trap. The use of non-polytetrafluoroethylene (PTFE) thread sealant, plastic tubing, or flow controllers with rubber components should be avoided since such materials out-gas organic compounds which will be concentrated in the trap during the purge operation.

5.2 Analyses of reagent blanks provide information about the presence of contaminants. When potential interfering peaks are noted in blanks, the analyst should change the purge gas source. Subtracting blank values from sample results is not permitted.

5.3 Interfering contamination may occur when a sample containing low concentrations of volatile organic compounds is analyzed immediately after a sample containing high concentrations of volatile organic compounds. After analysis of a sample containing high concentrations of volatile organic compounds, one or more instrument blanks must be analyzed to check for cross contamination.

5.3.1 This interference may be prevented by rinsing the purging apparatus and sample syringes with portions of organic-free reagent water between samples.

5.3.2 In extreme situations, the whole purge and trap device may require dismantling and cleaning.

5.4 Special precautions must be taken to avoid contamination when analyzing for methylene chloride. The analytical and sample storage area must be isolated from all atmospheric sources of methylene chloride. Otherwise, random background levels will result. Since methylene chloride will permeate through PTFE tubing, all gas chromatography carrier gas lines and purge gas plumbing must be constructed from stainless steel or copper tubing. Laboratory clothing worn by the analyst should be clean since clothing previously exposed to methylene chloride fumes during liquid/liquid extraction procedures can contribute to sample contamination.

5.5 Samples can be contaminated by diffusion of volatile organics (particularly methylene chloride and fluorocarbons) through the septum seal into the sample during shipment and storage. A trip blank prepared from organic-free reagent water and carried through the sampling and handling protocol can serve as a check on such contamination.

5.6 This procedure can be used to quantitate most volatile organic compounds that have boiling points below 200°C and that are insoluble or slightly soluble in water. Volatile water-soluble compounds can be included in this analytical technique. However, for the more soluble compounds, quantitation limits are approximately ten times higher because of poor purging efficiency. Such compounds include low-molecular-weight-halogenated hydrocarbons, aromatics, ketones, nitriles, acetates, acrylates, ethers and sulfides.

MASTER

ESS Laboratory. This document may be reproduced solely for internal use.

6.0 EQUIPMENT/APPARATUS

6.1 **Microsyringes**: 10 µL, 25 µL, 50 µL, 100 µL, 250 µL, 500 µL, and 1,000 µL. These syringes should be equipped with a 20 gauge (0.006" ID) needle.

6.2 **Disposable micropipettes**: 10, 50, 100 and 200 µL volumes. Purchased from Drummond.

6.3 **Syringe**: 5 ml and 25 ml glass, gas-tight, with Luerlock tip.

6.4 **Balance**: Top-loading balance capable of weighing 0.1 g.

6.5 **Micro-reaction vessels**: 1.0 ml and 5.0 ml purchased from Supelco. Catalogue No. 3-3293 with Mininert Caps. Clean reaction vessels by placing in oven at 105°C overnight.

6.6 **Volumetric flasks**: of various sizes with ground glass stoppers –Class A.

6.7 **Vials**: 40 ml, with pierceable Teflon screw cap top.

6.8 **Spatulas**: Stainless steel.

6.9 **Disposable pipettes**: Pasteur.

6.10 **Culture tubes**: 10 x 150 mm. Kimball No. 45060-19150. Culture tubes are only used once, then discarded.

6.11 **Syringe Valve**: Two-way with Luerlok ends.

6.12 **Chamber heaters**: Tekmar sample heater, capable of maintaining the purging chamber to within 1°C over the temperature range of ambient to 100°C.

6.13 **Purge and trap devices**: (A) Tekmar 3100, Stratum Purge and Trap Concentrator. (B) Archon Purge and Trap Auto-Sampler System (EST)

6.13.1 The Archon Purge and Trap Auto-sampler is designed to Automate the tedious sample handling procedures associated with purge and trap analyses for volatile organic compounds (VOCs) under current EPA methods. The Archon can be used for drinking water, wastewater, soil and solid analyses.

6.13.2 **Function Keys**:

A) Method: Methods are entered using a keypad with LCD screen. All information can be edited using keypad. ***NOTE: Settings are variable and may change depending on analysis requirements.***

Method parameters consist of:

Sample Type (water/soil) water
First Vial(1-51) variable

MASTER

Last Vial(1-51)	variable
Sample Volume(0-25ml)	05
Dilution Factor	variable
Rinse Volume(0-25ml)	07
# Rinses(0-20)	01
Standard 1(yes/no)	variable
Standard 2(yes/no)	variable
S. Preheat Stir(yes/no)	no
Stir(yes/no)	no
W. Stir Time(0-9.9min)	0.0
W. Settle Time(0-99sec)	0.0
Syringe Flush(0-20)	01
Preheat(yes/no)	no
Preheat Temp(amb-140C)	--
Preheat Time(0-99.9min)	--
Purge Time(0-999.9min)	--
Desorb Time(0-99.9min)	1.0
Operation Mode(Local/Remote)	Remote
Cycle Timer(0-99.9min)	0.0
Aux Timer(0-999min)	0.0
Link to Method	variable

B) **Auto**: Starts purge sequence. Initiates single blank runs. Single blank runs can be programmed after specific sample vials within a particular method. These method blanks allow the cleaning of not only the Archon, but also the purge and trap and GC. The blank water is withdrawn from the blank water reservoir, which is pressurized by helium gas at 20-25 psi. Before changing the blank reservoir, the "Blank Water Reservoir and Standard Helium" switch must turned off. This switch is located on the right rear panel inside the Archon. After refilling the reservoir, this switch must be turned on.

C) **Manual**: allows for manual injection of samples.

D) **Flush**: allows flushing of Archon components using water from Blank Water Reservoir

E) **System**: provides access to all settings, maintenance, calibration, and options of the Archon.

F) **Pause/Stop**: allows analyst to pause or abort sequence.

6.13.3 The sample is purged in a 5ml fitted purge tube. The purge gas passes through the water column as finely divided bubbles, each with a diameter of less than 3 mm at the origin. The purge gas is introduced no more than 5 mm from the base of the water column.

6.13.4 The trap is at least 25 cm long and has an inside diameter of at least 0.105". This trap is commercially available from Supelco (Vocarb 3000, Catalogue

ESS Laboratory. This document may be reproduced solely for internal use.

No. 2-4920).

6.13.5 The desorber is capable of rapidly heating the trap to 260°C and performing the bake out step at 265°C.

6.13.6 The chamber heater is capable of maintaining the purge device at 40°C ±1°C.

6.14 **Gas chromatograph**: HP5890 Series II or HP-6890. A complete analytical system with a temperature programmable gas chromatograph suitable for on-column injection and all required accessories including syringes, analytical columns and gases.

6.15 **Column**: 60 M x 0.25 mm x 1.4 µm, DBVRX commercially available from J&W Scientific (or equivalent).

6.16 **Mass spectrometer**: HP5971MSD, HP5972MSD, HP5973MSD, Agilent 5975MSD - Capable of scanning from 35 to 260 AMU every 1 second or less, utilizing 70 volts electron energy in the electron impact ionization mode and producing a mass spectrum which meets all the criteria listed in section 11.1 when 50 ng of 4-Bromofluorobenzene (BFB) is injected through the gas chromatograph inlet.

6.17 **Data system**:

6.17.1 **Computers:** The Volatiles laboratory has four GC/MS systems analyzing method 5030B/8260B. VOA MS1 has an AST computer with a Windows 95 operating system. VOA MS2 has an ADEK computer with Windows NT operating system VOA MS3 and MS4 have DELL computers with Windows NT operating system. All computer systems are networked to a Windows 2003 server, which is the destination of all files.
All computer systems are networked to a Windows 2012 R2 server, which is the destination for all files.
Full/Differential/Incremental backups: Daily backups are incremental, weekly backups are differential, and monthly backups are full. We keep daily backups for 7 days, weekly backups for 7 weeks and monthly backups indefinitely..

6.17.2 **Software:** HP Enviroquant MSChemstation - The software is interfaced to the mass spectrometer detector and allows the continuous acquisition and storage on machine-readable media of all mass spectra obtained throughout the duration of the chromatographic program. The computer software allows searching of any GC/MS data file for ions of a specified mass and plotting such ion abundance versus time or scan number. This type of plot is defined as an Extracted Ion Current Profile (EICP). The software is also capable of integrating the abundance in any EICP between specified time or scan number limits. The most current version of the EPA/NIST Mass Spectral Library is also available. Current versions VOA MS1:G1032C version C.01.00, VOA MS3:G1701BA Version B.01.00, and VOA MS4: G1701AA version A.03.00.

ESS Laboratory. This document may be reproduced solely for internal use.
MASTER

7.0 REAGENTS AND STANDARDS

7.1 Reagents:

7.1.1 **Methanol**: Purge and Trap grade, purchased from Fisher, Catalog No.A453-500.

7.1.2 **Reagent Water**: Water in which interference is not observed at ½ the method reporting limit (MRL) of the parameters of interest. DI water obtained from the VOA laboratory fits the criterion.

7.2 Standards:

7.2.1 **Primary Standards**: obtained from a commercial source. They are stored in the freezer at -10°C to -20°C. After opening; they are stored in a vial with a mininert valve. All Certificates of Analysis (COAs) are marked with the appropriate Primary Standard ID and placed in a logbook. Primary standards are not to be used after the manufacturer's expiration date. Once a standard has been opened, it may not be used after 2 months. A copy of the COAs, which details the compounds found in the mixes, are in Attachment A.

Manufacturer	Standard	Catalog Number	Conc. (µg/ml)
Restek	Ketones	30006	5000
Restek	Acrolein	30645	5000
Restek	Oxygenates	30465	2000/10,000 (TBA)
Restek	Custom	558360	2000
Restek	Gases	30042-510	2000
Restek	Cal Mix#1	30633	2000
Restek	2-CEVE	30265	2000
Restek	Vinyl Acetate	30216	2000
Accustandard	1,4-Dioxane	ALR-062N	10,000*
Ultra	Surrogate	STM-530-1	2500
Accustandard	1,3,5-Trichlorobenzene	As-E0176	5000

*The primary standard for 1,4-Dioxane is made up from neat by diluting 10 µL of neat 1,4-Dioxane into a 1.0 ml volumetric flask

7.2.2 **Working Calibration Standard (25 µg/ml)**: Prepared standards are stored in micro reaction vessels or vials capped with mininert valve. Standards are checked frequently for signs of degradation or evaporation. Working calibration standards are used for preparing calibration curves and daily continuing calibrations.

7.2.2.1 Into 5ml volumetric flask add the following: 125 µL of Ketone std., 62.5 µL each of gas, Custom std., Cal Mix#1, Vinyl acetate, and oxygenate standards, 312.5 µL of 2-CEVE std, 25µL of Acrolein std, 25µL of 1,3,5-Trichlorobenzene, 237.5 µL 1,4-Dioxane and 50 µL of surrogate standard. Volumize to 5ml with MeOH. Final concentration equals 125 µg/ml for the Ketones and 2-CEVE, 500 µg/ml of 1,4-Dioxane, and 25 µg/ml for all other analytes including

ESS Laboratory. This document may be reproduced solely for internal use.

MASTER

surrogates.

7.2.3 **Secondary Source/BS/Matrix spike standards**: obtained from a commercial source. They are stored in the freezer at -10°C to -20°C. After opening; they are stored in a vial with a mininert valve. All Certificates of Analysis must be kept on file.

Manufacturer	Standard	Catalog Number	Conc. (µg/ml)
Accustandard	TCL Ketone Mix	CLP-022K-25x	5000
Supelco	Acrolein	4S8501	10,000*
Accustandard	Method 502.2 VOC	M-502-10x	2000
Ultra	VOC Mix	DWm-592-1	2000
Ultra	Custom Std	CUS-10604	2000
Accustandard	2-CEVE	M-601C-10x	2000
Supelco	Vinyl acetate	4-0327	5000
Ultra	1,4-Dioxane	RCC-180	10,000*
Accustandard	tert-Butyl Alcohol	S-410	2000

*The primary standard for 1,4-Dioxane and Acrolein is made from neat product by diluting 10 µL into a 1.0 ml volumetric flask.

7.2.3.1 **Initial Calibration Verification- ICV/BS/BSD/Matrix spike standard (25 µg/ml):** Used to check the primary standard. Into 5ml volumetric flask containing approximately 3 ml of MeOH add 62.5 µl each of Custom std., VOC mix , 502.2 mix and 25 µL of Vinyl acetate. Add 12.5 µL of Acrolein, 250 µL of 1,4-Dioxane, 100 µL TCL Ketone Mix, and 312.5 µL tert-Butyl Alcohol and 2-CEVE. Volumize to 5ml with MeOH. Individual components will have a final concentration of 25 µg/ml with the exception of 1,4-Dioxane at 500µg/ml. A copy of the COAs, which details the compounds in the mixes, is attached.

7.2.4 **Surrogate Standards**: The surrogate solution is made up of Dibromofluoromethane, Toluene-d_8, 4- Bromofluorobenzene, and 1,2-Dichloroethane-d_4. The mixed stock surrogate solution is purchased from Ultra at 2500 µg/ml (cat no. STM-530-1). The stock solution is logged into the primary standard logbook upon receipt. Several surrogate standard solutions are prepared from the stock at different concentrations in methanol.

7.2.4.1 **Surrogate mix**: For soil/sediment samples, the preparation of this solution is discussed in SOP# 20_5035.

7.2.4.2 **Surrogate/Internal standard QC mix**: To a 5 ml volumetric flask containing approximately 3 ml of methanol add 250 µL of stock surrogate and stock internal standard. Volumize with methanol to give a final concentration of 125 µg/ml. Transfer to reservoir #1 on the Archon. Addition of 1uL of this standard by the Archon to 5.0 ml of sample is equivalent to 25 ppb.

MASTER

7.2.5 **Internal Standards**: The internal standards are Pentafluorobenzene,

ESS Laboratory. This document may be reproduced solely for internal use.

Chlorobenzene-d_5, and 1,4-Dichlorobenzene-d_4. The mixed internal standard solution is purchased from Restek at 2,500 µg/ml (Cat No. 30074). See SOP 20_5035 for internal standard solution for soil calibration.

7.2.5.1 **Internal Standard for calibration:** Prepare by addition of 50 uL of Internal Standard solution into a final volume of 5 ml MeOH, final concentration is 25 ug/ml.

7.2.6 **Continuing Calibration Verification Standard (CCV):** Addition of 50 uL of the working calibration standard (See 7.2.2.1) to 50.0 ml of organic free water is equivalent to 25 ppb. This solution is prepared fresh daily.

7.2.7 **Blank Spike/Blank spike duplicates (BS/BSD)**: Prepared by adding 40 uL of Blank spike solution (7.2.3.1) to 100 ml DI water in a 100 ml volumetric flask for a final concentration of 10 ug/L. Blank spike concentrations are to be at the midpoint (median standard level) of the calibration curve.

7.2.8 **4-Bromofluorobenzene (BFB) Standard**: A stock solution in methanol is purchased from Supelco at a concentration of 2,000 µg/ml (cat. no. 4-8083).

7.2.8.1 Add 62.5µL of the stock solution to a 5.0-ml volumetric flask and dilute with methanol to produce a 25-µg/ml solution. A 25 ug/L standard is purged to check the instrument tune.

7.2.9 **Matrix Spiking Standard**: prepared as in section 7.2.3.1

7.2.9.1 **Working Matrix Spike Solution**: Prepare aqueous matrix spikes by adding 40 uL of matrix spike solution to 100 ml sample in a 100 ml volumetric flask for a final concentration of 10 ug/L.

8.0 PROCEDURE

8.1 Initial calibration for purge-and-trap procedures:

8.1.1 ESS Laboratory's policy is that the audit trail on the Chemstation/Enviroquant software is always on. This ensures that any changes made to the instrument operating method be documented through the audit trail.

8.1.2 GC/MS operating conditions: The following parameters are setup through Hewlett Packard MS EnviroQuant. A copy of an EnviroQuant method is in Attachment B.

MASTER

Electron energy:	70 volts
Mass range:	35 amu - 260 amu
Scan time:	1.5 sec/scan
Initial column temp..:	40°C
Initial column hold time:	4.0 min.

Column temp. program:	Rate	Final Temp	Final Time

ESS Laboratory. This document may be reproduced solely for internal use.

Level 1	8°C/Min	150°C	2 min
Level 2	35°C/Min	220°C	0-4.25 min
Injector temperature:	200°C		
Transfer line temperature:	280°C		
Carrier gas (Helium):	15 cm^3/ml		

8.1.3 Assemble a purge-and-trap device that meets the specification in Section 6.1.3. New traps are conditioned one hour at 270°C in the bake mode. Prior to daily use bake trap for 8 minutes at 260°C

8.1.4 Just prior to any analysis of samples or standards, the run logbook should be completely filled out (See Attachment C). Each instrument has its own run logbook. Any unusual observations are included in the comment section of the logbook. The information that must be recorded is:

8.1.4.1 **Batch Date**: Date analytical sequence set-up

8.1.4.2 **Vial #**: Position the standard/sample vial is placed in the auto-sampler

8.1.4.3 **File #**: File ID assigned to standard/sample in sequence

8.1.4.4 **Lab ID**: The ID of the sample or standard. Sample IDs are assigned at log-in by ELEMENT (ex: 0508001) and Batch QC samples contain the batch ID (ex BG50801-blk1, BG50801-bs1, BG50801-bsd1, ...)

8.1.4.5 **Method**: Record the method used. The method includes instrument operating parameters and initial calibration for quantitation.

8.1.4.6 **Comments/Dilution/Standard ID**: Record comments and unusual observations. If a sample is run at a dilution, then record the dilution information in the comments section. (Ex. 25x dilution on aqueous sample: 0.2/5 ml) Record standard/spike ID for Tune, CCV, blank spike/blank spike duplicates, and matrix spike/matrix spike duplicates.

8.1.4.7 **Analyst**: Analyst must record their initials.

8.1.5 A tune check must be performed before the initial calibration curve. This is accomplished by purging a 25 ug/L standard of the 4-Bromofluorobenzene standard (See section 7.2.8) onto the GC/MS column. Analysis is not to begin until the 4-BFB spectra meets the criteria in Section 11.1. Evaluation of the ion abundance is performed by using one of the following scan scenarios:

- Use one scan at the peak apex,
- Use the one scan either directly preceding or following the apex,
- Use the mean of the apex and the scans preceding and following the scan, or
- Use the average across the entire peak.

ESS Laboratory. This document may be reproduced solely for internal use.

8.1.5.1 The analysis of all calibration standards must be accomplished within 12 hours of this tune check.

8.1.6 Prepare the standards for generating the calibration curve using the Working Standards (see section 7.2.2) and Internal Standard solution (see Section 7.2.4.1) as follows:

8.1.6.1 **Soil Method:** The calibration curve for soil/sediment samples is discussed in SOP 20_5035.

8.1.6.2 **Water Method:** Eight standards (0.4, 0.5, 1.0, 5.0, 10, 25, 50, and 100 ppb) are run. The 5 ppb is prepared in a 50 ml volumetric by adding 10µL of 25 ug/ml working calibration standard (7.2.2) to 50 ml of DI water. 50 ul of internal standard mix (7.2.5.1) is then added for a final concentration of 25 ppb. The flask is inverted three times and the solution is transferred to a 40 ml VOA vial leaving no headspace. The 0.4, 0.5, 1.0, 10, 25, 50, and 100ppb standards are prepared by adding 0.8, 1.0, 2.0, 20, 50, 100, and 200µL of working standard as described above, the amount of internal standard added remains constant for all the standards. These are placed in the Archon for purge & trap analysis.

8.1.7 Carry out the purge-and-trap analysis procedure as described in Section 8.3.

8.1.8 EnviroQuant will tabulate the area response of the characteristic ions (see Table 2) against concentration for each compound and internal standard. It will also calculate response factors (RF) for each compound relative to its internal standards according to the calculations in Section 9.1.

NOTE: HP EnviroQuant software calculates and reports response factors for the analyst. It is each analyst's responsibility to become familiar with the software by reading the available manuals. **After generating the initial calibration curve in Enviroquant, the analyst must visually check that each calibration standard was entered into the new calibration method. This is accomplished by checking that the area response for one compound from each calibration standard's printout corresponds to the area account listed in the calibration method in Enviroquant.** All of the analytes along with their retention times, retention windows, and the ions used for qualitative analysis are listed in Attachment B.

8.1.9 The average RF is calculated and recorded in the EnviroQuant Method for each compound. A system performance check is made before this calibration curve is used. Five compounds (the System Performance Check Compounds or SPCCs) are checked for a minimum average response factor. These compounds are Chloromethane, 1,1-Dichloroethane, Bromoform, 1,1,2,2-Tetrachloroethane and Chlorobenzene. The minimum acceptable RFs are 0.1 for Chloromethane, 1,1-Dichloroethane, and Bromoform, and 0.3 for Chlorobenzene and 1,1,2,2-Tetrachloroethane. These compounds are used to check compound instability and to check for degradation of the

MASTER

ESS Laboratory. This document may be reproduced solely for internal use.

system, such as active sites in transfer lines or trap failure. ***NOTE: The minimum response factor for all other compound should not be less than 0.01. ESS Laboratory has found that the following poor performing compounds do not meet this criterion: Acetone, 2-Butanone (MEK), and 1,4-Dioxane.***

8.1.10 Using the RFs from the initial calibration, EnviroQuant software calculates the percent relative standard deviation (%RSD) for all compounds using the equation in Section 9.2. The %RSD should be less than 15% for each compound, except for the following continuing calibration compounds (CCCs) 1,1-Dichloroethene, Chloroform, 1,2-Dichloropropane, Toluene, Ethylbenzene and Vinyl Chloride, where the %RSD must be less than 30%.

8.1.10.1 Linearity - If the %RSD of any compound is 15% or less, then the relative response factor is assumed to be constant over the calibration range, and the average relative response factor may be used for quantitation.

8.1.10.2 When the RSD exceeds 15%, the plotting and/or visual inspection of the calibration data can be a useful diagnostic tool. The inspection may indicate analytical problems, including errors in standard preparation, the presence of active sites in the chromatographic system, analytes that exhibit poor chromatographic behavior, etc.

8.1.10.3 If a %RSD > 30 percent is measured for any method analyte (50% for poor purgers), then corrective action to eliminate a system leak and/or column reactive sites is required before re-attempting calibration. Poor purging compounds are listed in Table 2.

8.1.10.4 If the RSD of **any** compound exceeds 15% (never to exceed 30% except for poor purgers), then one of the following options must be applied to the GC/MS initial calibration in this situation or a new initial calibration must be performed.

8.1.10.4.1 Adjust the instrument and/or perform instrument maintenance until the RSD of the calibration meets the 15% QC limit. This option would apply in those instances where a linear instrument response is expected.

8.1.10.4.2 Narrow the calibration range until the response is linear. If the low standard is below the estimated quantitation limit (i.e., for the poor purgers in a commercially available prepared standard mix), then this standard may be dropped. Recalculate the RSD without this standard to see if the RSD meets the QC limit. It would be recommended that a new standard be prepared at a concentration between the existing fourth and fifth calibration standards, analyzed, and a new RSD calculated with all five points.

ESS Laboratory. This document may be reproduced solely for internal use.

8.1.10.4.3 Use a linear calibration. This would be achieved by performing a linear regression of the instrument response versus the concentration of the standards, **do not** force the curve through zero. In order to be used for quantitative purposes, the Correlation Coefficient r, must be greater than or equal to 0.990. This can easily be accomplished within the EnviroQuant software (see attachment B).

8.1.10.4.4 Use a non-linear calibration model. This option should be used only after exhausting the other three options, or in situations where the analyst knows that the instrument response does not follow a linear model over a sufficiently wide working range. (Coefficient of Determination, COD > 0.99).
When non-linear calibration is employed a minimum of six calibration points must be used for second order and seven calibration points for third order.

8.1.11 Immediately after the initial calibration has been generated then the initial calibration has to be verified using a second source standard. The percent recovery for the independent calibration verification standard is 80-120% for all CCC compounds and 70-130% for all other compounds.

8.1.12 The RRT's are established from the 25 ppb mid-point standard in the initial calibration

8.2 Daily GC/MS analysis: Just prior to all samples and standard analysis, the run logs are filled out according to 8.1.4.

8.2.1 Prior to the analysis of samples, purge a 25 ug/L standard of 4-BFB (50 uL of standard is added into 50ml DI water, Section 7.2.8). The resultant mass spectra for BFB must meet all of the criteria in Section 11.1 before sample analysis begins. This criteria must be met each 12-hour shift.

8.2.2 The initial calibration curve must be verified each 12-hour shift. This is accomplished by analyzing a calibration standard (7.2.7) at 25 µg/L. Determine if the SPCCs meet criteria from section 8.1.9. Determine if the CCCs listed in section 8.1.10 have % Deviation less than 20% with all other analytes having a % Deviation less than 30%, poor purging compounds (Ketones, 2-CEVE) must be less than 50%. Compounds not analyzed for in the batch of samples do not need to meet the criteria. Continuing calibrations used for 8021 analysis must have <20% RSD. For compounds analyzed for Method 624, continuing calibration criteria are met or exceeded by 8260 criteria.
Refer to Attachment E for Mass DEP MCP requirements.

8.2.3 The internal standard responses and retention times in the continuing calibration standard should be evaluated immediately after data acquisition.

MASTER

ESS Laboratory. This document may be reproduced solely for internal use.

If the area for any of the internal standards changes by a factor of two (-50% to +100%) or the retention time changes by ± 0.5 minutes from the **mid-point standard of the initial calibration**, the mass spectrometer should be checked for defects. The relative retention time of each compound in each calibration run must agree to within 0.06 Relative Retention Time (RRT) Units. The RRT's in the continuing calibration standard is compared to the RRT's from the 25 ppb standard in the ICAL.Analysis is not to continue until problem has been resolved.

8.2.4 Method blank analysis should be performed at the following frequency:

8.2.4.1 For the analysis of volatile compounds, a method blank analysis must be performed once for each 12-hour shift and must be analyzed before any samples.

8.2.4.2 A method blank for volatile analysis should contain less than or equal to the Method Reporting limit of methylene chloride. For all other TCL compounds, the method blank should contain less than ½ MRL of any single TCL analyte. See section 11.5 for instructions on corrective action when criteria are exceeded.

8.2.5 Blank Spike/Blank spike duplicate analysis must be performed once for each 12-hour shift, after the tune and CCV, and must be analyzed before any samples. BS/BSD concentrations are to be at the midpoint (median standard level) of the calibration curve. See section 10.0 for BS/BSD acceptance criteria.

8.2.5.1 See 7.2.7 for BS/BSD preparation.

8.3 GC/MS analysis: All samples and standards are analyzed under the same conditions in the associated initial calibration. Run logs are filled according to section 8.1.4.

8.3.1 Aqueous samples

8.3.1.1 All samples and working standard solutions should be allowed to warm to ambient temperature before analysis.

8.3.1.2 Set up the GC/MS system as outlined in Section 8.1.1.

8.3.1.3 BFB tuning criteria and daily GC/MS calibration criteria must be met (Section 11.1) before analyzing samples.

8.3.1.4 Sample or standard vials are placed in the Archon. The Archon will transfer 5 ml of sample/standard to a 5ml fitted purge tube. The process of taking an aliquot destroys the validity of remaining volume of an aqueous sample for future analysis.

8.3.1.5 The Archon is programmed to add 1µL of Surrogate/Internal Standard (IS; Section 7.2.4.2) to the sample. The Surrogate/IS QC Mix is to be added to each blank, sample and spiked sample.

MASTER

ESS Laboratory. This document may be reproduced solely for internal use.

8.3.1.6 Purge the sample for 11.0 ± 0.1 min at ambient temperature.

8.3.1.7 At the conclusion of the purge time, the purge-and-trap will sound a ready signal from the GC and begin to desorb the trap while initiating the chromatographic temperature program and the CHEMSTATION data acquisition.

8.3.1.8 After the sample has been desorbed for one minute, the Purge & Trap will recondition the trap by heating to 265°C while back flushing with Helium. This step will take 10 minutes.

8.3.1.9 When necessary to composite samples for analysis, the following procedure is used:

8.3.1.9.1 Add 5 ml of each sample (up to 5 samples are allowed) to a 25 ml glass syringe. Special precautions must be made to maintain zero headspace in the syringe. Larger volumes of a smaller number of samples may be used, if equal volumes of each sample are composited. If more than 5 samples are to be composited, then they can be combined in a larger flask (500 ml or greater).

8.3.1.9.2 The samples must be cooled to 4°C or less during this step to minimize volatilization losses. Sample vials may be placed in a tray of ice during the processing.

8.3.1.9.3 Mix each vial well and draw out a 5-ml aliquot with the 25-ml syringe.

8.3.1.9.4 Once all the aliquots have been combined in the syringe, invert the syringe several times to mix the aliquots. Introduce the composited sample into the instrument, using the method of choice. . If more than 5 samples are to be composited, pour from the volumetric flask (500 ml or greater) into a VOA vial for analysis.

8.3.1.9.5 If less than five samples are used for compositing, a proportionately smaller syringe may be used, unless a 25-ml sample is to be purged.

8.3.1.10 If a sample or a dilution of the sample has a concentration of analytes that exceeds the initial calibration range, the sample must be reanalyzed at a higher dilution. The ARCHON can be set to dilute up to 100x. Dilutions can also be performed directly in 5-ml syringe by adding an aliquot of sample to reagent water using a micropipette. The follow procedure is used to dilute aqueous samples. All steps must be performed without delay, until the diluted sample is in a gas-tight syringe.

MASTER

ESS Laboratory. This document may be reproduced solely for internal use.

8.3.1.10.5 Dilutions may be made in volumetric flasks (10-100 ml). Select the volumetric flask that will allow for the necessary dilution. Intermediate dilution steps may be necessary for extremely large dilutions.

8.3.1.10.6 Calculate the approximate volume of organic-free reagent water to be added to the volumetric flask, and add slightly less than this quantity of organic-free reagent water to the flask.

8.3.1.10.7 Inject the appropriate volume of the original sample from the syringe into the flask. Aliquots of less than 1 ml are not recommended. Dilute the sample to the mark with organic-free reagent water. Cap the flask, invert, and shake three times. Repeat above procedure for additional dilutions.

8.3.1.10.8 Dilutions are documented in the analytical run logbook.

8.3.1.11 When a sample is analyzed that has any target compound at a level exceeding twice the initial calibration range, this analysis should be followed by a blank reagent water analysis in the purge chamber to demonstrate that system is clean. If the blank analysis is not free of interferences, the system should be decontaminated. Sample analysis may not resume until a blank can be analyzed that is free of interferences.

NOTE: Since the analytical system is automated the analyst may not be aware that a high concentration sample has been analyzed. If analysis of subsequent samples occurs, then the presence of the high concentration analyte makes re-analysis of that sample necessary to determine if carryover has occurred.

8.3.1.12 For matrix spike analysis, in a 100 ml volumetric flask add 40 µL of the matrix spike solution (Section 7.2.3.1) to the 100 ml of sample. Invert three times and pour into 2 VOA vials.

8.3.1.13 All dilutions should keep the response of the major constituents in the upper half of the linear range of the curve.

8.3.2 Dilutions for soil/sediment samples are discussed in SOP 20_5035.

8.3.2.1 The procedure for running soil/sediment samples is discussed in SOP 20_5035.

MASTER

ESS Laboratory. This document may be reproduced solely for internal use.

8.4 Data interpretation

8.4.1 Qualitative identification

8.4.1.1 An analyte (e.g. those listed in Table 2) is identified by comparison of the sample mass spectrum with the mass spectrum of a standard of the compound obtained on the user's GC/MS. These standard reference spectra are obtained through analysis of the calibration standards. To compare the sample and reference spectra, go into the EnviroQuant software (QEDIT). The characteristic ions from the reference mass spectrum are defined to be the three ions of greatest relative intensity - any ions over 30% if less than three such ions are present. The analytes are listed in Attachment B for each analyte.

8.4.1.2 The requirements for qualitative verification by comparison of mass spectra are:

8.4.1.2.1 The intensities of the characteristic ions of a compound maximize in the same scan or within one scan of each other. Selection of a peak by a data system target compound search routine, where the search is based on the presence of a target chromatographic peak containing ions specific for the target compound at a compound-specific retention time, will be accepted as meeting this criterion.

8.4.1.2.2 The RRT of the sample component is compared to the RRT from the 25 ppb standard in the ICAL and must be within ±0.06 RRT units of the RRT of the standard component.

8.4.1.2.3 The relative intensities of the characteristic ions agree within 30% of the relative intensities of these ions in the reference spectrum. (Example: For an ion with an abundance of 50% in the reference spectrum, the corresponding abundance in a sample spectrum can range between 20% and 80%).

8.4.1.2.4 Structural isomers that produce very similar mass spectra should be identified as individual isomers if they have sufficiently different GC retention times. Sufficient GC resolution is achieved if the height of the valley between the two isomer peaks is less than 25% of the sum of the two peak heights. Otherwise, structural isomers are identified as isomeric pairs. ESS Laboratory currently reports m- and p-xylenes together due to inability of resolving the isomers.

8.4.1.2.5 Identification is hampered when sample components are not resolved chromatographically and produce mass spectra containing ions contributed by more than one analyte. When gas chromatographic peaks obviously represent more than one sample component (i.e., a broadened peak with

ESS Laboratory. This document may be reproduced solely for internal use.

shoulder(s) or a valley between two or more maxima), appropriate selection of analyte spectra and background spectra are important. Examination of extracted ion current profiles of appropriate ions can aid in the selection of spectra, and in qualitative identification of compounds. When analytes co-elute (i.e., only one chromatographic peak is apparent), the identification criteria can be met, but each analyte spectrum will contain extraneous ions contributed by the co-eluting compound.

8.4.1.2.6 For samples containing components not associated with the calibration standards, a library search may be made for the purpose of tentative identification. The necessity to perform this type of identification will be determined by the type of analyses being conducted. When serving the role of QA (or referee) laboratory, tentatively identified compounds (TICs) shall always be reported. Guidelines for making tentative identification are listed in section 11.9.3.

8.4.2 Quantitative Analysis

8.4.2.1 Compounds, which have been identified, are quantified by the internal standard method, utilizing the integrated abundance of the primary ion. The internal standard used shall be those listed in Section 8.1.7. The EnviroQuant method is setup to calculate the concentration of the analytes of interest in ng/ml using the initial calibration results stored in the method (Attachment B). This raw data number does not account for deviations in sample volume, sample weight, dilution factors, and % moisture. To include these other factors, see section 9.0.

9.0 CALCULATIONS

9.1 Response Factor (RF)
RF=(As x Cis)/(Ais x Cs)

Where:

A_S = Peak area (or height) of the analyte or surrogate.

A_{IS} = Peak area (or height) of the internal standard.

C_S = Concentration of the analyte or surrogate, in µg/L.

C_{IS} = Concentration of the internal standard, in µg/L.

9.2 Percent Relative Standard Deviation (%RSD)
$\%\ RSD = (SD / RF_{Average}) \times 100\%$

Where:

RSD = Relative standard deviation.

RF = Mean of 5 initial RFs for a compound.

ESS Laboratory. This document may be reproduced solely for internal use.

SD = Standard deviation of average RFs for a compound.

9.3 Percent Difference

$\%Difference = ((RF_{Average} - RFc)/ RF\ Average) \times 100\%$

Where:

$RF_{Average}$ = Average response factor from initial calibration

RF_C = Response factor from current verification check standard.

9.4 Percent Drift

$\%Drift = ((C1-C0)/ C1) \times 100\%$

Where:

C_1 = compound standard concentration

C_0 = measured concentration using selected quantitation method

9.5 Concentration of Target Analytes in Water and Water-Miscible Waste Concentration

$\mu g/L = (Ax)(Cs)(D) / (Ais)(RF_{Average})(Vs)$

Where:

A_X = Area (or height) of the peak for the analyte in the sample.

A_{IS} = Area (or height) of the peak for the internal standard.

C_S = Mass (amount) of the internal standard in the concentrated sample extract (ng). This is not just the mass injected into the instrument, but the total mass of internal standard in the concentrated extract.

D = Dilution factor, if the sample or extract was diluted prior to analysis. If no dilution was made, D = 1. The dilution factor is always unitless.

$RF_{Average}$ = Mean response factor from the initial calibration.

V_S = Volume of the aqueous sample extracted or purged (ml). If units of liters are used for this term, multiply the results by 1000.

Using the units specified here for these terms will result in a concentration in units of ng/ml, which is equivalent to µg/L.

9.6 Concentration of Target Analytes in Sediment/Soil, Sludge, and Waste – see SOP 20_5035.

10.0 QUALITY ASSURANCE/QUALITY CONTROL

Accuracy and Precision

Laboratory personnel must demonstrate initial proficiency for each sample preparation method/matrix that he or she performs. New employees must successfully demonstrate initial proficiency prior to independently performing analysis on real samples. This is accomplished by generating data of acceptable accuracy and precision for target analytes in

ESS Laboratory. This document may be reproduced solely for internal use.

a clean matrix. Initial proficiency results will become part of each employee's training file.

QC Sample Preparation:
Spiking Solution: Four QC samples must be prepared from a spiking solution with the analytes of interest. The spiking solution must be made using standards **prepared independently from those used for calibration.** The samples must be prepared at a concentration that would result in data falling within the middle of the calibration curve. In most cases the blank spike or matrix spike solution is used. Prep: The samples are prepared in a clean matrix. In most cases this initial demonstration will simply be a matter of preparing four blank spikes with a batch of samples.

Sample Analysis:
The four QC samples must be analyzed within the criteria of the method being evaluated. The QC samples must be handled in exactly the same manner as actual samples.

Accuracy Calculation:
Accuracy is defined as the closeness of agreement between an observed value and an accepted reference value. Each of the four spiked samples will be calculated for percent recovery. The average of the percent recovery values is the accuracy result.

Precision Calculation:
Precision is defined as the agreement of a set of replicate measurements without assumption of knowledge of the true value. Precision is estimated by the relative standard deviation (RSD) of the four QC samples.

$$\%RSD = (s / \bar{x})\ 100\ \%$$

Where:
s = Standard Deviation of a finite number of values. On a scientific calculator use the σxn-1 key.

$\bar{x}$ = The average of the four QC sample % recoveries.

Reporting Accuracy and Precision
Accuracy and Precision data should be presented with the following minimum info:

Matrix: Prep Method:
Analysis Method: Date Analyzed:
Accuracy: Precision:

Parameter	*% Rec. QC 1*	*% Rec. QC 2*	*% Rec. QC 3*	*% Rec. QC 4*	*Average Recovery*	*Standard Deviation*	*%RSD*

Interpretation of Results: Percent recovery is to be within 80-120% for all analytes with a RPD of ≤20%. For the full 8260B list a maximum of 5 sporadic marginal failures are allowed with the expanded criteria of 60-140%.

10.1 A preparation batch is defined as a group of up to 20 field samples of similar matrix

ESS Laboratory. This document may be reproduced solely for internal use.

that have been prepared at the same time or time sequence with the same lots of reagents for the same analysis. In addition to the samples, each prep batch will contain at a minimum, a method blank, a blank spike, blank spike duplicate.An analytical/instrument batch is defined as samples that are analyzed together within the same time period or in continuous sequential time periods. The analytical batch includes QC requirements as defined by the analytical (determinative) method. For example, each injection sequence would begin with a tune and CCV (or tune, calibration and ICV), followed by a method blank, BS/BSD, etc. and remaining field samples. Prep batches may be continuously strung together in these run sequences, as long as the analytical batch QC requirements meet the acceptance criteria established within the appropriate SOP. If all field and QC samples could not be completed within the 12-hour clock, then another tune, CCV, and MB would be required.

Each analytical sequence must be documented using the run log in Figure 1.

10.2 Perform BFB tune every 12 hours. Tuning acceptance criteria are presented in Section 11.1. The computer software will evaluate the tune information. The analyst should be aware of the process used.

10.3 Run an 8-point initial calibration curve, using the primary source standards each time major instrument maintenance occurs, or if the CCV does not meet acceptance criteria. Acceptance criteria are presented in Section 11.2.

10.4 Run initial calibration verification (ICV) standard using secondary standards (7.2.3) following the initial calibration curve. Acceptance criteria are listed in Section 11.3.

10.5 Run a mid-point Continuing Calibration Verification (CCV) at 25 µg/L using the primary source standards on a daily basis before sample analysis. Also run a CCV every 12 hours during an analytical sequence. Acceptance criteria are listed in Section 11.4.

10.6 A method blank must be prepared with each batch of samples not to exceed 12 hours. The method blank should be prepared from organic-free water. The method blanks are to be related to each 12-hour sequence of samples injected. Acceptance criteria for these blanks are listed in Section 8.2.4 and corrective action is listed in Section 11.5. Instrument blanks may be injected at any time in the sequence to verify absence of contamination.

10.7 A Blank spike/Blank spike duplicate (BS/BSD) must be prepared and analyzed with each batch of samples. The BS/BSDs are prepared using a source different than that used to prepare the initial calibration standards and contain all method target analytes (see 7.2.3.1 and 7.2.7). Acceptance criteria are 70-130% and ≤35% RPD.

MASTER

Refer to Attachment E for Mass DEP MCP requirements. Sporadic Marginal Exceedance number is as follows:

ESS Laboratory. This document may be reproduced solely for internal use.

Number of Analytes in BS	Allowable number of Marginal Exceedances
>90	5
71-90	4
51-70	3
31-50	2
11-30	1
<11	0

Exceedances should be within marginal exceedance limits (Table 3) or expanded criterion listed above.

NOTE: The CCV and BS are considered equivalent for aqueous samples. Only one will need to be analyzed but it must be prepared from a source different than that used to perform initial calibration. In the case of solids, the BS is extracted similar to the samples. Use CCV acceptance criteria as presented in Section 8.2.2.

10.7.1 Control charts will be maintained for the BS/BSD for a representative subset of target analytes and surrogate spikes, in accordance with SOP 110.0014.

10.8 On an ongoing basis the laboratory analyzes matrix spikes and matrix spike duplicates, if requested and adequate sample vials provided by client.

10.8.1 The matrix spike is prepared as described in Section 7.2.9.

10.8.2 Matrix spike control limits are 70-130%. %RPD between spike and spike duplicate should be ≤30%. ***Refer to Attachment E for Mass DEP MCP requirements.*** For samples outside control limits, see Section 11.6 for corrective action.

10.9 Surrogates recoveries limits are 70-130%. ***Refer to Attachment E for Mass DEP MCP requirements.*** For samples outside control limits, see Section 11.7 for corrective action.

10.10 The relative retention times (RRTs) need to be checked for each identified compound in samples, and compared to standard RRT. Acceptance criteria are presented in Section 11.8.

10.11 Ion abundance for target compounds and any tentatively identified compounds need to meet specific requirements. Acceptance criteria for ion abundance are presented in Section 11.9.

10.12 Internal standard area counts for standards and samples must meet specifications as described in Section 11.10.

MASTER

10.13 Data shall be checked to ascertain if it conforms to accepted practices. All sample analytical results used for final data reporting must be between the low standard and the high standard. Results, which fall below the low standard or above the high standard, are to be reported as estimated values. Corrective actions are described in Section 11.11.

10.14 MDLs are determined in reagent water or organic-free sand/soil and verified annually per SOP 110.0013. (Project-specific requirements may require that the MDL study be performed in the site-specific matrix.).

11 DATA VALIDATION

The items shall be verified and documented on the appropriate VOA Department Sequence Log (Attachment C).

11.1 Ensure that the BFB tune was run at the beginning of each 12-hour sequence for each batch of samples analyzed. The acceptance criteria are listed below:

BFB Key Ions and Ion Abundance Criteria:

Ion	Abundance
50	15.0-40.0% of mass 95
75	30.0-60.0% of mass 95
95	base peak, 100% relative abundance
96	5.0-9.0% of mass 95
173	< 2.0% if mass 174
174	> 50.0% of mass 95
175	5.0-9.0% of mass 174
176	> 95.0%, but less than 101% of mass 174
177	5.0-9.0% of mass 176

11.1.1 If BFB acceptance criteria are not met, perform any or all of the following corrective actions:

Re-inject BFB.
Retune with PFTBA, then re-inject BFB.
Clean MS source, retune with PFTBA, and re-inject BFB.

11.1.2 If the tuning criteria still cannot be met after performing the above, have the mass spectrometer serviced by manufacturer representative.

11.2 After an eight-point initial calibration curve is analyzed, ensure that the following criteria were met.

MASTER

ESS Laboratory. This document may be reproduced solely for internal use.

11.2.1 For the RFs, the %RSD must be less than 30% for all method target analytes, except for the poor purgers where the %RSD must be less than 50%.

11.2.1.1 If the %RSD of any method target analyte is 15% or less, then the relative response factor is assumed to be constant over the calibration range, and the average relative response factor may be used for quantitation.

11.2.1.2 If the %RSD of any method target analyte is greater than 15%, calibration curves must be constructed using first or higher order regression fits of the six calibration points. ***NOTE: A minimum of 5 points are used for average and linear regression calibration, six point for second order, and seven points for third order calibrations.*** The corresponding Coefficients of Determination (R^2) must be 0.99 or greater.

11.2.1.3 If these acceptance criteria are not met, then the following corrective actions should be performed: (1) adjust the instrument and/or perform instrument maintenance; or (2) narrow the calibration range using seven standards at different concentrations. The low end of the calibration curves must be carefully watched.

11.2.2 System Performance Check Compounds (SPCCs) and continuing calibration compounds (CCCs) must be evaluated and passed for initial calibration. Refer to Section 8.1.9 and 8.1.10.

11.3 If an initial calibration was performed, verify that initial calibration verification (ICV) was also performed. The percent difference for the CCC analytes must be within 20% (30% for all other target analytes). If not, reanalyze the ICV or prepare a new calibration curve as necessary.

11.4 Ensure the continuing calibration verification (CCV) standard is analyzed at the required frequency (every 12 hours or initially before daily analysis). In addition, the following acceptance criteria must be met.

11.4.1 System Performance Check Compounds (SPCCs): A system performance check must be made during every 12-hour shift. This is the same check that is applied during the initial calibration. If the minimum response factors are not met, the system must be evaluated, and corrective action must be taken before sample analysis begins. The minimum RF for volatile SPCCs is listed in Section 8.1.9.

MASTER

11.4.2 Calibration Check Compounds (CCCs): After the system performance check is met, CCCs listed in Section 8.1.9 are used to check the validity of the initial calibration with a limit of <20% drift or difference. Acceptance criteria is $\leq$ 30% drift for all other method target analytes (50% for the poor

ESS Laboratory. This document may be reproduced solely for internal use.

purgers). *When samples are to be to be run for MCP, all compounds must have <20% drift).*

If these criteria are exceeded, corrective action is necessary. If corrective action fails to produce consecutive (immediate) calibration verification within acceptance criteria, then the analyst may perform maintenance to try to troubleshoot the instrument. After maintenance, the analyst must analyze two consecutive CCV at two concentration (one at or below mid-range) to demonstrate that corrective action was successful. If not, then a new eight-point calibration must be generated. These criteria must be met before sample analysis begins and re-analysis of samples up to the last acceptable CCV standard must occur with the following exceptions:

- When the acceptance criteria is exceeded high, high bias, then all samples that are non-detects may be reported.

- When the acceptance criteria for the CCV are exceeded low, low bias, sample results that exceed a maximum regulatory limit may be reported.

11.4.3 When performing analyses for MCP, any analyte outside of criteria in the CCV must be noted in the project narrative

11.5 Assess the method blanks. The analyst shall confirm that this blank was analyzed at the required frequency and the criteria in Section 8.3.4 are met. Analytical batches with Method blanks outside acceptance criteria will be re-prepped and re-analyzed with the following exceptions:

11.5.1 Samples that are at least twenty times higher than the method blank may be reported.

11.5.2 When the method blank is less than 5% of the regulatory limit associated with the analyte the method blank would be acceptable.

11.5.3 If the analyte is found in the method blank above ½ the MRL but is not in any of the associated samples, no corrective action is needed.

11.5.4 Any results that are reported with method blank contamination must be B-flagged.

11.6 Assess that matrix spike/matrix spike duplicates were analyzed at required frequency. Acceptance criteria are that all % Recovery and/or RPD results meet project-established goals. If no project goals are specified, then results must be

within the control limits listed in Section 10. If results are not within criteria, perform the following corrective actions as appropriate.

MASTER

11.6.1 If both BS/BSD and MS/MSD recoveries are unacceptable, then the entire batch of field and QC samples must be reanalyzed.

ESS Laboratory. This document may be reproduced solely for internal use.

11.6.2 If the MS/MSD is unacceptable, but the BS is acceptable, then a potential matrix effect has been identified. Reasonable attempts must be made to address matrix interference. The client must be notified in the case narrative of the matrix problem.

11.7 Check the surrogate calculations for correctness for all samples, blanks, BS, MS, and MSD. The following acceptance criteria apply to surrogate recoveries.

11.7.1 The surrogate recoveries for all QC samples must be within control limits of 70-130%. If the BS/BSD and/or method blank recoveries are outside limits, re-analysis must be performed for verification. If still outside limits, then corrective action is necessary. ***See Table 3 for surrogate acceptance limits for DoD projects.***

11.7.2 If sample surrogate recoveries exceed these limits, the sample must be re-analyzed. If the results are still outside the limits, then matrix affect has been verified and results are discussed in case narrative. ***NOTE: If an obvious matrix effect is seen on the chromatogram (Unresolved complex mixture, UCM), then re-analysis is not necessary. MA-MCP and CT-RCP projects must have a copy of the chromatogram included with the report.***

11.8 The relative retention times must be checked for all identified compounds in both standards and samples. The internal standard absolute retention times must also be checked for all analyses. Acceptance criteria are as follows:

11.8.1 The relative retention times of each compound in each calibration run should agree within 0.06 relative retention time (RRT) units. Late-eluting compounds usually have much better agreement.

11.8.2 Internal standard retention time:

11.8.2.1 If the retention time for any CCV internal standard changes by more than 30 seconds from the **mid-point standard of the initial calibration**, the chromatographic system must be inspected for malfunctions and corrections must be made, as required.

11.8.3 If the retention time for any sample internal standard changes by more than 30 seconds from the daily calibration, the chromatographic system must be inspected for malfunctions and corrections must be made, as required.

11.9 The analyst must verify that ion abundance meets specific criterion for the various analyses. The following acceptance criteria shall be checked for all appropriate samples.

11.9.1 All ions present in the standard mass spectrum at a relative intensity greater than 10% (most abundant ion in the spectrum equals 100%) must be present in the sample spectrum.

ESS Laboratory. This document may be reproduced solely for internal use.

11.9.2 The relative intensities of ions specified in Section 11.10.1 must agree within plus or minus 30% between the standard and sample spectra. (Example: For an ion with an abundance of 50% in the standard spectrum, the corresponding sample abundance must be between 20 and 80 percent.)

11.9.2.1 Molecular ions present in the reference spectrum should be present in the sample spectrum.

11.9.2.2 Ions present in the sample spectrum but not in the reference spectrum should be reviewed for possible background contamination or presence of co-eluting compounds.

11.9.2.3 Ions present in the reference spectrum, but not in the sample spectrum should be reviewed for possible subtraction from the sample spectrum because of background contamination or co-eluting peaks. Data system library reduction programs can sometimes create these discrepancies.

11.9.3 For samples containing components not associated with the calibration standards, a library search may be made for the purpose of tentative identification. The necessity to perform this type of identification will be determined by the purpose of the analyses being conducted. When serving the role as QA (or referee) laboratory, tentatively identified compounds (TICs) are always reported. Computer-generated library search routines should not use normalization routines that would misrepresent the library or unknown spectra when compared to each other. For example, the RCRA permit or waste de-listing requirements may require the reporting of non-target analytes. Only after visual comparison of sample spectra with the nearest library searches will the mass spectral interpretation specialist assign a tentative identification. Guidelines for making tentative identification are as follows:

11.9.3.1 Relative intensities of major ions in the reference spectrum (ions > 10% of the most abundant ion) should be present in the sample spectrum.

11.9.3.2 The relative intensities of the major ions should agree within ±30%. (Example: For an ion with an abundance of 50% in the standard spectrum, the corresponding sample ion abundance must be between 20 and 80%.)

11.9.3.3 Molecular ions present in the reference spectrum should be present in the sample spectrum. Ions present in the sample spectrum but not in the reference spectrum should be reviewed for possible background contamination or presence of co-eluting compounds.

11.9.3.4 Ions present in the reference spectrum, but not in the sample

ESS Laboratory. This document may be reproduced solely for internal use.

spectrum should be reviewed for possible subtraction from the sample spectrum because of background contamination or co-eluting peaks. Data system library reduction programs can sometimes create these discrepancies.

11.10 The analyst will check the internal standard area counts for all calibration standards, QC samples, and samples for quantitation. If the area for any of the CCV internal standards changes by a factor of two (-50% to +100%) from the mid-point standard of the initial calibration, the mass spectrometer must be inspected for malfunctions and corrections must be made, as appropriate. All sample internal standards must be -50 to 200% if their associated CCV. If the internal standard area counts fail this criterion, the following corrective actions should be considered:

11.10.1 Check to ensure there was no error in internal standards preparation or addition. Also, check instrument performance.

11.10.2 If the CCV failed criterion, re-analyze once. If this second consecutive CCV still does not meet criterion, then a new initial calibration must be performed.

11.10.3 If the internal standards for samples are outside criterion, then re-analyze once. If re-analysis produces results within criteria, then report these results. If the re-analysis is still outside criterion, discuss matrix issue in project narrative. ***NOTE: If an obvious matrix effect is displayed on the chromatogram (Unresolved complex mixture, UCM), then re-analysis is not necessary. MA-MCP and CT-RCP projects must have a copy of the chromatogram included with the report.***

11.11 The analyst must verify all reported results are derived from analytical results that are below the highest standard of the initial calibration curve and above the low standard. Values reported below the low standard are to be reported as estimated values (J values). For samples that exceed the calibration curve, dilute and analyze an appropriate sample aliquot.

11.12 All manual integration must be printed, when made, for verification.

11.13 Besides the items listed in Sections 11.1 through 11.12, the analyst should also verify the additional items as noted in Attachment C. A second level of review must be performed by a second analyst, results are recorded on Attachment C.

12.0 REFERENCES

12.1 SW-846 Method 8260B, Test Methods for the Analysis of Solid Waste, Third Edition, Update III.

12.2 HP GC EnviroQuant User's Guide, HPG1045A.

12.3 HP Environmental Data Analysis User's Guide HPG0032C.

ESS Laboratory. This document may be reproduced solely for internal use.

12.4 HP 6890 and 5890 Series II GC Operations Manuals.

12.5 HP 5971A and 5973 MS Operations Manuals.

12.6 TNI Standard 2009: Volume 1, Module 2 and Volume 1, Module 4.

12.7 DELETED.

13 ATTACHMENTS

13.1 Attachment A – Primary Standard Certificates of Analysis

13.2 Attachment B – Enviroquant method

13.3 Attachment C – Run logbook

1.1 Attachment E – Massachusetts DEP WSC-CAM IIA requirements.

1.2 Attachment F – Connecticut DEP RCP requirements.

2.0 POLLUTION PREVENTION AND WASTE MANAGEMENT

2.1 ESS Laboratory's policies on pollution prevention and waste management are covered in SOP 90_0002, Hazardous Waste Contingency and Emergency Response Plan. All employees are trained in the requirements of the SOP.

3.0 METHOD PERFORMANCE

3.1 Precision and Accuracy data must be generated by all employees before performing this analysis on client samples. The data is generated by analyzing a method blank and four blank spike samples. Acceptance criteria are 80-120% Recovery and %RSD of $\leq$ 20%. Five (5) sporadic marginal exceedances are allowed.

3.2 The precision and accuracy data in Table 1 were obtained using the SOP. Values are in ug/L.

MASTER

4.0 TABLES, DIAGRAMS, FLOWCHARTS, AND VALIDATION DATA

Table 1. Typical Precision and Accuracy data generated 1/3/2005

Analyte	Spk	Avg	%Rec	%RSD	Analyte	Spk	A
Dichlorodifluoromethane	25	24.51	98	1.3	2-Hexanone	25	118.
Chloromethane	25	23.82	95	1.1	trans-1,3-Dichloropropene	25	26.1
Vinyl Chloride	25	23.94	96	0.7	1,1,2-Trichloroethane	25	24.7
Bromomethane	25	25.37	101	1.9	1,3-Dichloropropane	25	25.1
Chloroethane	25	25.00	100	1.6	Tetrachloroethene	25	25.1
Trichlorofluoromethane	25	25.05	100	0.2	Dibromochloromethane	25	27.0

ESS Laboratory. This document may be reproduced solely for internal use.

Trichlorofluoromethane	25	25.05	100	0.2	Dibromochloromethane	25	27.05	108	1.3
Diethyl ether	25	24.63	99	1.7	1,2-Dibromoethane	25	25.26	101	1.4
Acetone	25	113.63	91	1.1	1-Chlorohexane	25	24.39	98	1.0
Carbon Disulfide	25	24.35	97	1.0	Chlorobenzene	25	24.75	99	1.3
1,1-Dichloroethene	25	24.37	97	0.5	1,1,1,2-Tetrachloroethane	25	25.23	101	1.1
Methylene Chloride	25	24.55	98	1.7	Ethylbenzene	25	24.67	99	1.0
Methyl tert-Butyl Ether	25	47.42	95	1.3	Xylene P,M	25	49.08	98	1.5
trans-1,2-Dichloroethene	25	24.42	98	2.4	Xylene O	25	24.56	98	1.8
1,1-Dichloroethane	25	24.31	97	1.8	Styrene	25	25.42	102	1.2
Vinyl Acetate	25	24.78	99	1.8	Bromoform	25	26.13	105	1.1
Di-isopropyl ether	25	24.71	99	1.8	Isopropylbenzene	25	24.86	99	0.8
Ethyl tertiary-butyl ether	25	24.92	100	1.6	1,2,3-Trichloropropane	25	24.13	97	1.2
2-Butanone	25	123.99	99	2.2	Bromobenzene	25	24.95	100	1.7
cis-1,2 Dichloroethene	25	24.54	98	1.6	1,1,2,2-Tetrachloroethane	25	24.79	99	1.9
2,2-Dichloropropane	25	24.47	98	2.1	n-Propylbenzene	25	24.56	98	1.9
Bromochloromethane	25	24.14	97	1.1	2-Chlorotoluene	25	24.31	97	3.9
Tetrahydrofuran	25	23.44	94	2.1	4-Chlorotoluene	25	24.20	97	1.1
Chloroform	25	24.53	98	1.4	1,3,5-Trimethylbenzene	25	24.53	98	1.6
1,1,1-Trichloroethane	25	24.92	100	1.1	tert-Butylbenzene	25	24.52	98	1.2
1,1-Dichloropropene	25	24.41	98	0.9	1,2,4-Trimethylbenzene	25	24.55	98	0.9
Carbon Tetrachloride	25	24.99	100	1.4	sec-Butylbenzene	25	24.67	99	1.3
Benzene	25	24.23	97	1.2	1,3 Dichlorobenzene	25	24.27	97	1.4
1,2-Dichloroethane	25	25.00	100	1.6	4-Isopropyltoluene	25	24.42	98	1.4
Tertiary-amyl methyl ether	25	24.64	99	1.8	1,4 Dichlorobenzene	25	24.46	98	1.4
Trichloroethene	25	24.46	98	1.3	n-Butylbenzene	25	24.65	99	1.0
1,2-Dichloropropane	25	24.25	97	1.8	1,2 Dichlorobenzene	25	24.23	97	1.1
Dibromomethane	25	24.61	98	2.1	1,2-Dibromo-3-Chloropropane	25	25.46	102	1.8
1,4-Dioxane	25	489.19	98	11.1	1,2,4-Trichlorobenzene	25	24.36	97	1.9
Bromodichloromethane	25	25.14	101	1.9	Hexachlorobutadiene	25	26.30	105	1.9
4-Methyl-2-Pentanone	25	121.18	97	1.7	Naphthalene	25	23.59	94	1.3
cis-1,3-Dichloropropene	25	25.30	101	1.7	1,2,3-Trichlorobenzene	25	23.71	95	2.3
Toluene	25	24.70	99	1.1					

17.0 DEFINITIONS

17.1 **Accuracy**: The closeness of agreement between an observed value and an accepted reference value. When applied to a set of observed values, accuracy will be a combination of a random component and of a common systematic error (or bias) component.

ESS Laboratory. This document may be reproduced solely for internal use.

17.2 **Batch**: A group of samples which behave similarly with respect to the sampling or the testing procedures being employed and which are processed as a unit. For QC purposes, if the number of samples in a group is greater than 20, then each group of 20 samples or less will all be handled as a separate batch.

17.3 **Bias**: The deviation due to matrix effects of the measured value (x_s - x_u) from a known spiked amount, where x_s is the spiked sample and x_u is the un-spiked sample. Bias can be assessed by comparing a measured value to an accepted reference value in a sample of known concentration or by determining the recovery of a known amount of contaminant spiked into a sample (matrix spike).

17.4 **Control Sample**: A QC sample introduced into a process to monitor the performance of the system.

17.5 **Equipment Blank**: A sample of analyte-free media which has been used to rinse the sampling equipment. It is collected after completion of decontamination and prior to sampling. This blank is useful in documenting adequate decontamination of sampling equipment.

17.6 **Method Reporting Limit**: The lowest concentration that can be reliably achieved within specified limits of precision and accuracy during routine laboratory operating conditions. The MRL is generally 5 to 10 times the MDL. ESS Laboratory sets the MRL to the lowest non-zero standard in the calibration curve or higher.

17.7 **Field Duplicates**: Independent samples which are collected as close as possible to the same point in space and time. They are two separate samples taken from the same source, stored in separate containers, and analyzed independently. These duplicates are useful in documenting the precision of the sampling process.

17.8 **Blank Spike (BS)**: A known matrix spiked with compound(s) representative of the target analytes. This is used to document laboratory performance.

17.9 **Matrix**: The component or substrate (e.g., surface water, drinking water) which contains the analyte of interest.

17.10 **Matrix Duplicate**: An intralaboratory split sample which is used to document the precision of a method in a given sample matrix.

17.11 **Matrix Spike**: An aliquot of sample spiked with a known concentration of target analyte(s). The spiking occurs prior to sample preparation and analysis. A matrix spike is used to document the bias of a method in a given sample matrix.

17.12 **Matrix Spike Duplicates**: Intralaboratory split samples spiked with identical concentrations of target analyte(s). The spiking occurs prior to sample preparation and analysis. They are used to document the precision and bias of a method in a given sample matrix.

ESS Laboratory. This document may be reproduced solely for internal use.

17.13 **Method Blank**: An analyte-free matrix to which all reagents are added in the same volumes or proportions as used in sample processing. The method blank should be carried through the complete sample preparation and analytical procedure. The method blank is used to document contamination resulting from the analytical process.

17.14 **Method Detection Limit (MDL)**: The minimum concentration of a substance that can be measured and reported with 99% confidence that the analyte concentration is greater than zero and is determined from analysis of a sample in a given matrix type containing the analyte. See SOP 110_0013 for further explanation.

17.15 **Organic-Free Reagent Water**: For volatiles, all references to water in the method refer to water in which an interferant is not observed at the method detection limit of the compounds of interest. A water purification system is usedto generate organic-free deionized water.

17.16 **Records**: Include all logbooks, papers, machine readable materials, or other documentary materials, regardless of physical form or characteristics.

17.17 **Surrogate**: An organic compound which is similar to the target analyte(s) in chemical composition and behavior in the analytical process, but which is not normally found in environmental samples.

17.18 **Trip Blank**: A sample of analyte-free media taken from the laboratory to the sampling site and returned to the laboratory unopened. A trip blank is used to document contamination attributable to shipping and field handling procedures. This type of blank is useful in documenting contamination of volatile organics samples.

18.0 PERSONNEL QUALIFICATIONS

18.1 Analysts who perform this analysis must have a working knowledge or quantitative and qualitative analysis, instrumental methods of analysis, chemical laboratory methods, and equipment.

18.2 All analysts, before performing any analysis, participate in the ESS Laboratory training program (SOP80_0016). The training process consists of reading the Standard Operating Procedure, gaining instruction on the procedure from an experienced analyst, and performing the initial demonstration of capability.

19.0 TROUBLESHOOTING

19.1 If BFB criteria are not met, the analysis must be repeated. Analysis can not begin until BFB meets acceptance criteria. Repeated failures indicate that the MS acquisition parameters must be adjusted. These parameters should be adjusted in manual tune, saved and the tune repeated.

ESS Laboratory. This document may be reproduced solely for internal use.

19.2 If manual or auto-tune does not produce BFB spectra within acceptance criteria, the MS source may need cleaning. Cleaning instructions are found in the MS detector manual.

19.3 Method blanks must not contain any target compound greater than ½ the MRL with the exception of methylene chloride (see section 11.5 for expanded criteria). If the method blank does not meet criteria, then system must be cleaned before processing samples. This includes washing the purge vessel and baking the trap.

19.4 See laboratory supervisor or operations manager for all other maintenance problems.

19.5 Record all maintenance in the instrument's maintenance logbook.

20.0 Data Management And Records

20.1 **Data Management** - ESS Laboratory's utilizes the Promium Element LIMS system as part of its Data Management system. Client sample information is entered into ELEMENT LIMS and analyses are assigned to each sample. The LIMS allows EPA hold times, minimum batch QC requirements, and QC criteria to be assigned to each analysis. Standards can be entered and assigned to QC samples through the LIMS. Once analysis has been performed, data is imported using DataTool avoiding manual errors. In conjunction with Crystal Reports, the ELEMENT system allows for a wide variety of reporting formats.

20.2 **Records** – The specific retention periods required in the NELAC Standards, EPA-CFR and state and local statutes are followed or exceeded. At a minimum, data records are retained for five years from last use (10 years for drinking water). If there is a question about whether a record should be retained or disposed because no specific requirement could be found, the record is retained until such time as a retention period is specified. Records are stored in specified-labeled locations and are easily retrievable. All raw data associated with testing is also retained including; computer printouts, chromatograms, review forms, and logbooks.

ESS Laboratory. This document may be reproduced solely for internal use.

TABLE 2 -Internal Standards with their associated compounds

PENTAFLUOROBENZENE (IS)	CHLOROBENZENE-d5 (IS)	1,4-DICHLOROBENZENE-d4 (IS)
Dichlorodifluoromethane	Toluene - d_8	Isopropylbenzene
Chloromethane	Toluene	trans-1,4-Dichloro-2-Butene
Vinyl Chloride	2-Hexanone (P)	1,2,3-Trichloropropane
Bromomethane	Ethyl methacrylate	Bromobenzene
Chloroethane (P)	1,3-Dichloropropane	1,1,2,2-Tetrachloroethane
Trichlorofluoromethane	Tetrachloroethene	n-Propylbenzene
Diethyl Ether	Dibromochloromethane	2-Chlorotoluene
Acrolein (P)	1,2-Dibromoethane	4-Chlorotoluene
1,1,2-Trichloro-1,2,2-trifluoroethane	1-Chlorohexane	1,3,5-Trimethylbenzene
Acetone (P)	Chlorobenzene	tert-Butylbenzene
Iodomethane (P)	1,1,1,2-Tetrachloroethane	Pentachloroethane
Carbon Disulfide (P)	Ethylbenzene	1,2,4-Trimethylbenzene
1,1-Dichloroethene	Xylene, M,O	sec-Butylbenzene
Allyl Chloride	Xylene P	1,3-Dichlorobenzene
Methyl acetate	Styrene	4-Isopropyltoluene
Methylene Chloride	Bromoform	1,4-Dichlorobenzene
Methyl tert-butyl ether	cis 1,4-Dicchloro-2-butene	n-Butylbenzene
Acrylonitrile (P)	4-Bromofluorobenzene*	1,2-Dichlorobenzene
trans-1,2-Dichloroethene		Hexachloroethane
1,1-Dichloroethane		1,2-Dibromo-3-chloropropane (P)
Vinyl Acetate		1,2,4-Trichlorobenzene
Chloroprene		Hexachlorobutadiene
Di-isopropyl ether		Naphtalene
Ethyl tertiary butyl ether		1,2,3-Trichlorobenzene
2-Butanone (P)		
cis-1,2-Dichloroethene		
2,2-Dichloropropane		
Methyl acrylate		
Bromochloromethane		
Methacrylonitrile		
Tetrahydrofuran		
Chloroform		
Dibromofluoromethane*		
1,1,1-Trichloroethane		
Cyclohexane		
1-Chlorobutane		
1,1-Dichloropropene		
Carbon Tetrachloride		
1,2-Dichloroethane-D4*		
Benzene		
1,2-Dichloroethane		
Tertiary-amyl methyl ether		
Trichlorethene		
Methylcyclohexane		
1,2-Dichloropropane		
Dibromomethane		
1,4-Dioxane (P)		
Bromodichloromethane		
2-Nitropropane		
2-Chloroethyl vinyl ether (P)		
4-Methyl-2-pentanone (P)		
cis-1,3-Dichloropropene		
Toluene		
trans-1,3-Dichloropropene		
1,1,2-Trichloroethane		

IS = Internal Standard; * = Surrogate; (P) = Poor purger

ESS Laboratory. This document may be reproduced solely for internal use.

Table 3 (DoD Quality Systems Manual Version 4.1, Table G-4) Blank Spike QC Limits

	DoD			
Analyte	LCL	UCL	LMEL	UMEL
1,1,1,2-Tetrachloroethane	80	130	75	135
1,1,1-Trichloroethane	65	130	55	145
1,1,2,2-Tetrachloroethane	65	130	55	140
1,1,2-Trichloroethane	75	125	65	135
1,1-Dichloroethane	70	135	60	145
1,1-Dichloroethene	70	130	55	140
1,1-Dichloropropene	75	130	65	140
1,2,3-Trichlorobenzene	55	140	45	155
1,2,3-Trichloropropane	75	125	65	130
1,2,4-Trichlorobenzene	65	135	55	145
1,2,4-Trimethylbenzene	75	130	65	140
1,2-Dibromo-3-Chloropropane	50	130	35	145
1,2-Dibromoethane	80	120	75	125
1,2-Dichlorobenzene	70	120	60	130
1,2-Dichloroethane	70	130	60	140
1,2-Dichloropropane	75	125	65	135
1,3,5-Trimethylbenzene	75	130	65	140
1,3 Dichlorobenzene	75	125	65	130
1,3-Dichloropropane	75	125	65	135
1,4 Dichlorobenzene	75	125	65	130
2,2-Dichloropropane	75	135	60	150
2-Butanone	30	150	10	170
2-Chlorotoluene	75	125	65	135
2-Hexanone	55	130	45	140
4-Chlorotoluene	75	130	65	135
4-Methyl-2-Pentanone	60	135	45	145
Acetone	40	140	20	160
Benzene	80	120	75	130
Bromobenzene	75	125	70	130
Bromochloromethane	65	130	55	140
Bromodichloromethane	75	120	70	130
Bromoform	70	130	60	140
Bromomethane	30	145	10	165
Carbon Disulfide	35	160	15	185
Carbon Tetrachloride	65	140	55	150
Chlorobenzene	80	120	75	130
Dibromochloromethane	60	135	45	145
Chloroethane	60	135	50	145
Chloroform	65	135	50	150

ESS Laboratory. This document may be reproduced solely for internal use.

Chloromethane	40	125	25	140
cis-1,2 Dichloroethene	70	125	60	135
cis-1,3-Dichloropropene	70	130	60	140
Dibromomethane	75	125	65	135
Dichlorodifluoromethane	30	155	10	175
Ethylbenzene	75	125	65	135
Hexachlorobutadiene	50	140	35	160
Isopropylbenzene	75	125	65	135
m,p-Xylene	75	130	65	135
Methylene Chloride	55	140	40	155
Methyl tert-Butyl ether	65	125	55	135
Naphthalene	55	140	40	150
n-Butylbenzene	70	135	55	150
n-Propylbenzene	70	130	65	140
o-Xylene	80	120	75	130
p-Isopropyltoluene	75	130	65	140
sec-Butylbenzene	70	125	65	135
Styrene	65	135	55	145
tert-Butylbenzene	70	130	60	140
Tetrachloroethene	45	150	25	165
Toluene	75	120	70	130
trans-1,2-Dichloroethene	60	140	45	150
trans-1,3-Dichloropropene	55	140	40	155
Trichloroethene	70	125	60	135
Trichlorofluoromethane	60	145	45	160
Vinyl Chloride	50	145	35	165
Surrogates:				
Dibromofluoromethane	85	115	-	-
Toluene-d8	85	120	-	-
4-Bromofluorobenzene	75	120	-	-
1,2-Dichloroehane-d4	70	120	-	-

LCL = Lower Control Limit
UCL = Upper Control Limit
LMEL = Lower Marginal Exceedance Limit
UMEL = Upper Marginal Exceedance Limit

ESS Laboratory. This document may be reproduced solely for internal use.

Table 4

Summary of Method Quality Objectives for Method 8260B
Volatile Organic Compounds

QC Element	Frequency	Target Analyte/Surrogate	Corrective action
Tune	Every twelve hours	Criteria in Table 1	Suspend analysis until criteria met.
Initial Calibration Minimum 5-point ICAL for all analytes	Instrument set up. Each time the ICV or CCV can not meet criteria.	RSD≤15%, R≥0.995,R^2≥0.99 Do not force through origin	Recalibrate as required.
ICV	Immediately following initial calibration.	%Rec = 70-130%	Re-analyze once, if still fails criteria re-calibrate instrument.
CCV	At the beginning of each analytical sequence. No more than 20 samples or 12 hours between CCVs.	CCCs must be < 20%, all other analytes < 30% drift or difference	Re-analyze once, if still fails criteria re-calibrate instrument.
Blank spike/ Blank spike duplicate	At the beginning of each analytical sequence. Prepared using source different than that used to prepare initial calibration standards and contain all target analytes.	All target analytes < 30% drift or difference and ≤ 25%RPD, except for 1,4-dioxane (screen), where lab CLs are used. ***allows for 5 sporadic marginal failures.***	Re-analyze once with associated samples. If still outside criteria, report exceedance in project narrative. The lab is to identify those difficult analyte that routinely are outside the 70-130% criterion, disclose in P/N.
Method Blank	One per analytical batch of 20 or fewer samples. Use second source standard	Analytes < ½ MRL	See Section 11.0. Report nonconformance in case narrative.
MS/MSD	1 per 20 samples.	% Rec = 70-130%, except for 1,4-dioxane (screen), where lab CLs are used; ≤ 30% RPD .	Check BS, if BS is within criteria then report non-conformance in project narrative. If BS fails, then re-analyze.
Surrogates	Added to all samples and standards.	%Rec = 70-130%.	If one or more is outside criteria, then re-analyze sample unless an obvious interference is present (UCM).
Internal Standards	Added to all samples and standards.	50-200% of area counts in the associated continuing calibration standard.	If one or more is outside criteria, then re-analyze sample unless an obvious interference is present (UCM).

MASTER

5B14013 5B14017
5B14014
5B14015
5B14016

CERTIFICATE OF ANALYSIS

FOR LABORATORY USE ONLY - READ MSDS PRIOR TO USE

110 Benner Circle
Bellefonte, PA 16823-8812
Tel: (800) 356-1688
Fax: (814) 353-1309

Catalog No.: 30006 **Lot No.:** A034309

Description: VOA Calibration Mix #1

Expiration Date[1]: February 2008 **Storage:** Freezer

Elution Order	Compound	CAS#	Percent Purity[2]	Concentration[3]	Percent Uncertainty[4]
1	Acetone	67-64-1	99%	5000 ug/mL	+/- 0.1
2	2-Butanone (MEK)	78-93-3	99%	5000 ug/mL	+/- 0.1
3	4-Methyl-2-pentanone (MIBK)	108-10-1	99%	5000 ug/mL	+/- 0.1
4	2-Hexanone	591-78-6	99%	5000 ug/mL	+/- 0.1
	Solvent: P&T Methanol/Water (90:10)	67-56-1/7732-18-5	99%		

Column:
105m x .32mm x 3.0um
Rtx-502.2 (cat.#10910)

Carrier Gas:
hydrogen @ 40 cc/min.

Temp. Program:
40°C (hold 2 min.) to 240°C
@ 8°C/min.

Inj. Temp:
200°C

Det. Temp:
250°C

Det. Type:
FID

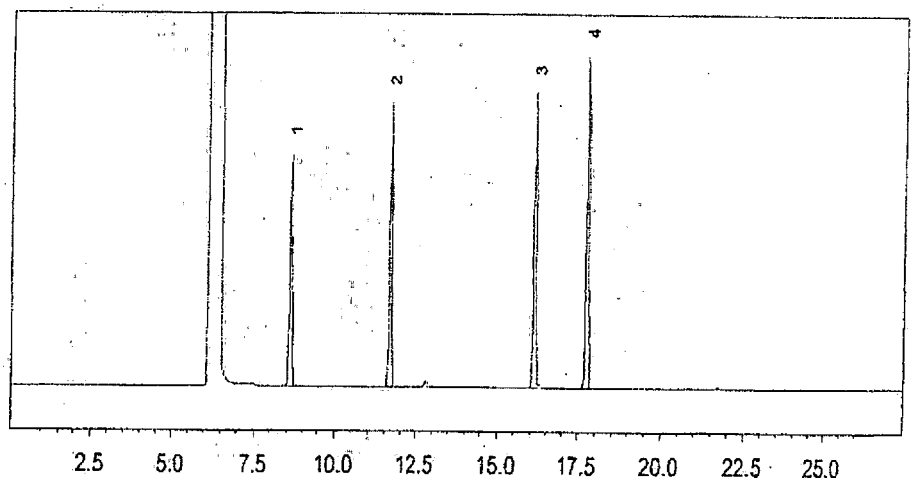

Manufactured By: MEW

John Lidgett - QA Analyst

1 Expiration date of the unopened ampul stored at recommended temperature.
2 Purity was determined by one or more of the following techniques: GC/FID, HPLC, GC/ECD, GC/MS. Value rounded to the nearest LOWER whole percentage. In addtion to detectors listed above, chemical identity and purity are confirmed using 1 or more of the following: MS, DSC, solid probe MS, GC/FPD, GC/NPD, GC/TC, FTIR, melting point, reflactive index, and Karl Fisher. See data pack or contact Restek for further details.
3 Based upon gravimetric preperation with balance calibration verified using NISTtraceable weights (7 mass levels).
4 Percent Uncertainty based upon balance AND ASTM Class A volumetric glassware accuracy.

ISO 9001 REGISTERED

Manufactured Under Restek's ISO 9001 Registered Quality System
Certificate #FM60397

MASTER

CERTIFICATE OF ANALYSIS

FOR LABORATORY USE ONLY - READ MSDS PRIOR TO USE

110 Benner Circle
Bellefonte, PA 16823-8812
Tel: (800) 356-1688
Fax: (814) 353-1309

Catalog No.: 30042 **Lot No.:** A034239

Description: 502.2 Calibration Mix #1

Expiration Date[1]: July 2011 **Storage:** Freezer

Elution Order	Compound	CAS#	Percent Purity[2]	Concentration[3]	Percent Uncertainty[4]
1	Dichlorodifluoromethane (CFC-12)	75-71-8	99%	2003 ug/mL	+/- 1.3
2	Chloromethane (methyl chloride)	74-87-3	99%	1997 ug/mL	+/- 1.3
3	Vinyl chloride	75-01-4	99%	2002 ug/mL	+/- 2.1
4	Bromomethane (methyl bromide)	74-83-9	99%	1995 ug/mL	+/- 1.3
5	Chloroethane (ethyl chloride)	75-00-3	99%	1996 ug/mL	+/- 1.3
6	Trichlorofluoromethane (CFC-11)	75-69-4	99%	2000 ug/mL	+/- 0.3
	Solvent: P&T Methanol	67-56-1	99%		

Column:
105m x .32mm x 1.8um
Rtx-502.2 (cat.#10921)

Carrier Gas:
helium @ 2.2 ml/min.

Temp. Program:
50°C (hold 9.5 min.) to 50°C @ 8°C/min.

Inj. Temp:
200°C

Det. Temp:
250°C

Det. Type:
MSD

5C18038
39
40
41
42

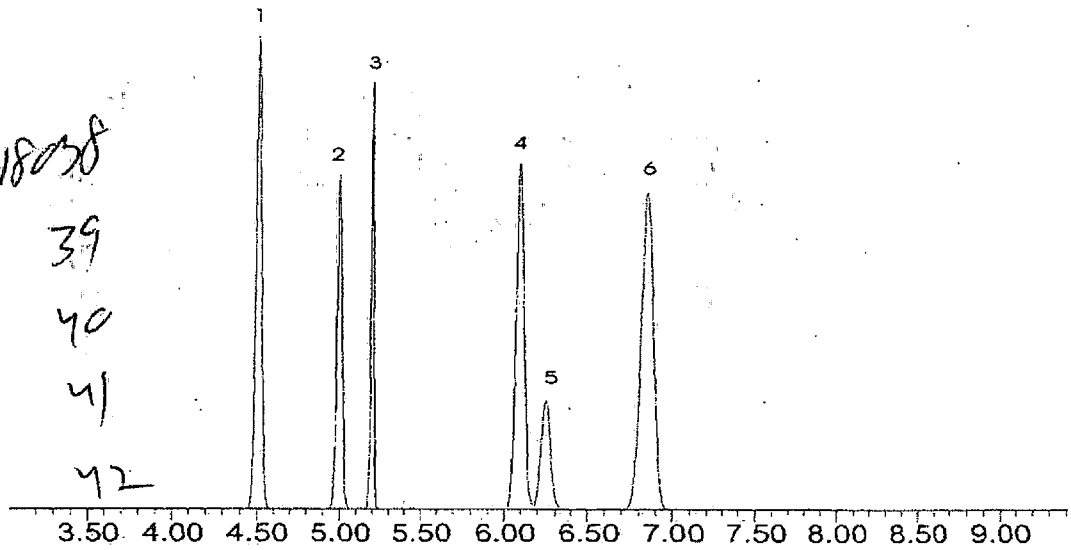

Manufactured By: MEW

John Lidgett

John Lidgett - QA Analyst

1 Expiration date of the unopened ampul stored at recommended temperature.
2 Purity was determined by one or more of the following techniques: GC/FID, HPLC, GC/ECD, GC/MS. Value rounded to the nearest LOWER whole percentage. In addtion to detectors listed above, chemical identity and purity are confirmed using 1 or more of the following: MS, DSC, solid probe MS, GC/FPD, GC/NPD, GC/TC, FTIR, melting point, reflactive index, and Karl Fisher. See data pack or contact Restek for further details.
3 Based upon gravimetric preperation with balance calibration verified using NISTtraceable weights (7 mass levels).
4 Percent Uncertainty based upon balance AND ASTM Class A volumetric glassware accuracy.

ISO 9001 REGISTERED

Manufactured Under Restek's ISO 9001 Registered Quality System Certificate #FM80397

MASTER

CERTIFICATE OF COMPOSITION

FOR LABORATORY USE ONLY - READ MSDS PRIOR TO USE

110 Benner Circle
Bellefonte, PA 16823-8812
Tel: (800) 356-1688
Fax: (814) 353-1309

Catalog No.: 558360 **Lot No.:** A036277

Description: Custom VOA Additions Standard

Expiration Date[1]: October 2006 **Storage:** Freezer

Elution Order	Compound	CAS#	Percent Purity[2]	Concentration[3]	Percent Uncertainty[4]
1	Methyl acetate	79-20-9	99%	2000 ug/mL	+/- 0.1
2	1-Chlorobutane (Butyl chloride)	109-69-3	99%	2000 ug/mL	+/- 0.1
3	Cyclohexane	110-82-7	99%	2000 ug/mL	+/- 0.1
4	Methylcyclohexane	108-87-2	99%	2000 ug/mL	+/- 0.1
5	1-Chlorohexane	544-10-5	99%	2000 ug/mL	+/- 0.1
6	Hexachloroethane	67-72-1	99%	2000 ug/mL	+/- 0.1
	Solvent: P&T Methanol	67-56-1	99%		

Column:
105m x .32mm x 1.8um
Rtx-502.2 (cat.#10921)

Carrier Gas:
helium @ 2.2 ml/min.

Temp. Program:
40°C (hold 2 min.) to 240°C
@ 8°C/min. (hold 10 min.)

Inj. Temp:
200°C

Det. Temp:
250°C

Det. Type:
MSD

5D12047 thru 5D12058

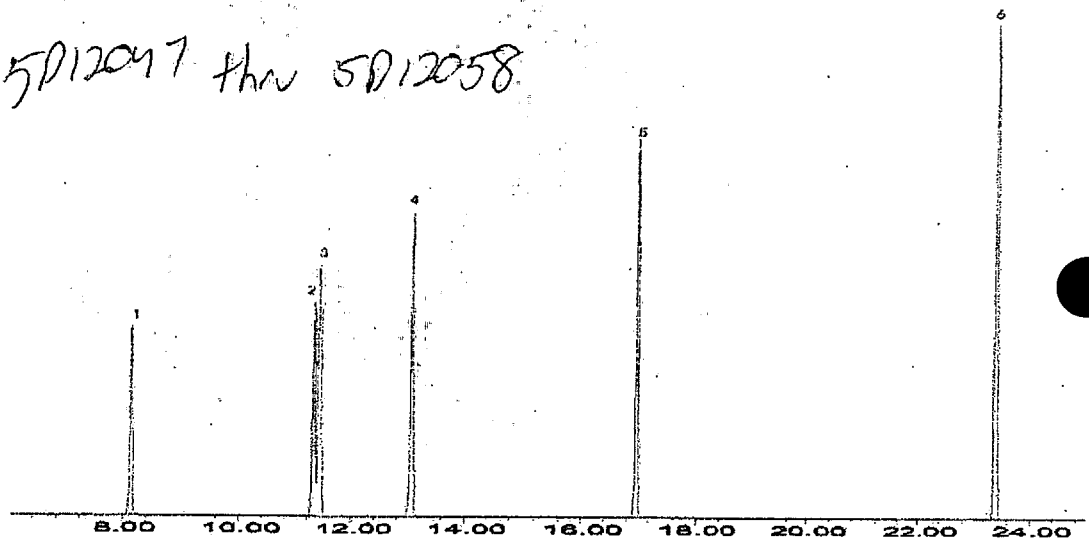

Manufactured By: JP

John Lidgett

John Lidgett - QA Analyst

1 Expiration date of the unopened ampul stored at recommended temperature.
2 Purity was determined by one or more of the following techniques: GC/FID, HPLC, GC/ECD, GC/MS. Value rounded to the nearest LOWER whole percentage. In addtion to detectors listed above, chemical identity and purity are confirmed using 1 or more of the following: MS, DSC, solid probe MS, GC/FPD, GC/NPD, GC/TC, FTIR, melting point, reflactive index, and Karl Fisher. See data pack or contact Restek for further details.
3 Based upon gravimetric preperation with balance calibration verified using NISTtraceable weights (7 mass levels).
4 Percent Uncertainty based upon balance AND ASTM Class A volumetric glassware accuracy.

ISO 9001 REGISTERED

Manufactured Under Restek's ISO 9001 Registered Quality System Certificate #FM80397

MASTER

4/7/2005

CERTIFICATE OF ANALYSIS

FOR LABORATORY USE ONLY - READ MSDS PRIOR TO USE

110 Benner Circle
Bellefonte, PA 16823-8812
Tel: (800) 356-1688
Fax: (814) 353-1309

Catalog No.: 30475A Lot No.: A036598

Description: 8260B Calibration Mix #1

Expiration Date[1]: April 2008 Storage: Freezer

5E IC68
69
7076

Elution Order	Compound	CAS#	Percent Purity[2]	Concentration[3]	Percent Uncertainty[4]
1	Diethyl ether (ethyl ether)	60-29-7	99%	2000 ug/mL	+/- 0.3
2	1,1,2-Trichlorotrifluoroethane (CFC-113)	76-13-1	99%	2000 ug/mL	+/- 0.3
3	1,1-Dichloroethylene	75-35-4	99%	2000 ug/mL	+/- 0.3
4	Acetonitrile	75-05-8	99%	2000 ug/mL	+/- 0.3
5	Iodomethane (methyl iodide)	74-88-4	99%	2000 ug/mL	+/- 0.3
6	Allyl chloride (3-chloropropene)	107-05-1	99%	2000 ug/mL	+/- 0.3
7	Methylene chloride (dichloromethane)	75-09-2	99%	2000 ug/mL	+/- 0.3
8	Carbon disulfide	75-15-0	99%	2000 ug/mL	+/- 0.3
9	Acrylonitrile	107-13-1	99%	2000 ug/mL	+/- 0.3
10	trans-1,2-Dichloroethylene	156-60-5	99%	2000 ug/mL	+/- 0.3
11	1,1-Dichloroethane	75-34-3	98%	2000 ug/mL	+/- 0.3
12	Chloroprene (2-chloro-1,3-butadiene)	126-99-8	99%	1961 ug/mL	+/- 1.6
13	Propionitrile	107-12-0	99%	2000 ug/mL	+/- 0.3
14	2,2-Dichloropropane	594-20-7	99%	2000 ug/mL	+/- 0.3
15	cis-1,2-Dichloroethylene	156-59-2	98%	2000 ug/mL	+/- 0.3
16	Methacrylonitrile	126-98-7	99%	2000 ug/mL	+/- 0.3
17	Methyl acrylate	96-33-3	99%	2000 ug/mL	+/- 0.3
18	Isobutanol (2-Methyl-1-propanol)	78-83-1	99%	2000 ug/mL	+/- 0.3
19	Chloroform	67-66-3	99%	2000 ug/mL	+/- 0.3
20	Bromochloromethane	74-97-5	99%	2000 ug/mL	+/- 0.3
21	Tetrahydrofuran	109-99-9	99%	2000 ug/mL	+/- 0.3
22	1,1,1-Trichloroethane	71-55-6	99%	2000 ug/mL	+/- 0.3
23	1,1-Dichloropropene	563-58-6	99%	2000 ug/mL	+/- 0.3
24	Carbon tetrachloride	56-23-5	99%	2000 ug/mL	+/- 0.3
25	1,2-Dichloroethane	107-06-2	99%	2000 ug/mL	+/- 0.3
26	Benzene	71-43-2	99%	2000 ug/mL	+/- 0.3
27	2-Chloroethanol (ethylene chlorhydrin)	107-07-3	99%	2000 ug/mL	+/- 0.3
28	Trichloroethylene	79-01-6	99%	2000 ug/mL	+/- 0.3
29	1,2-Dichloropropane	78-87-5	98%	2000 ug/mL	+/- 0.3
30	Methyl methacrylate	80-62-6	99%	2000 ug/mL	+/- 0.3
31	Bromodichloromethane	75-27-4	99%	2000 ug/mL	+/- 0.3
32	1,4-Dioxane	123-91-1	99%	2000 ug/mL	+/- 0.3
33	2-Nitropropane	79-46-9	98%	2000 ug/mL	+/- 0.3
34	Dibromomethane	74-95-3	99%	2000 ug/mL	+/- 0.3
35	cis-1,3-Dichloropropylene	10061-01-5	99%	2000 ug/mL	+/- 0.3
36	Toluene	108-88-3	99%	2000 ug/mL	+/- 0.3
37	Ethyl methacrylate	97-63-2	99%	2000 ug/mL	+/- 0.3
38	trans-1,3-Dichloropropylene	10061-02-6	99%	2000 ug/mL	+/- 0.3
39	1,1,2-Trichloroethane	79-00-5	99%	2000 ug/mL	+/- 0.3
40	1,3-Dichloropropane	142-28-9	99%	2000 ug/mL	+/- 0.3
41	Tetrachloroethylene	127-18-4	99%	2000 ug/mL	+/- 0.3
42	Dibromochloromethane	124-48-1	99%	2000 ug/mL	+/- 0.3
43	1,2-Dibromoethane (EDB)	106-93-4	99%	2000 ug/mL	+/- 0.3
44	Chlorobenzene	108-90-7	99%	2000 ug/mL	+/- 0.3
45	1,1,1,2-Tetrachloroethane	630-20-6	99%	2000 ug/mL	+/- 0.3
46	Ethylbenzene	100-41-4	99%	2000 ug/mL	+/- 0.3
47	m-Xylene	108-38-3	99%	2000 ug/mL	+/- 0.3
48	p-Xylene	106-42-3	99%	2000 ug/mL	+/- 0.3
49	o-Xylene	95-47-6	99%	2000 ug/mL	+/- 0.3
50	Styrene	100-42-5	99%	2000 ug/mL	+/- 0.3
51	Isopropylbenzene (cumene)	98-82-8	99%	2000 ug/mL	+/- 0.3
52	Bromoform	75-25-2	99%	2000 ug/mL	+/- 0.3
53	cis-1,4-Dichloro-2-butene	1476-11-5	97%	2000 ug/mL	+/- 0.3
54	1,1,2,2-Tetrachloroethane	79-34-5	99%	2000 ug/mL	+/- 0.3
55	1,2,3-Trichloropropane	96-18-4	99%	2000 ug/mL	+/- 0.3
56	trans-1,4-dichloro-2-butene	110-57-6	98%	2000 ug/mL	+/- 0.3
57	n-Propylbenzene	103-65-1	99%	2000 ug/mL	+/- 0.3
58	Bromobenzene	108-86-1	99%	2000 ug/mL	+/- 0.3

CERTIFICATE OF ANALYSIS

FOR LABORATORY USE ONLY - READ MSDS PRIOR TO USE

110 Benner Circle
Bellefonte, PA 16823-8812
Tel: (800) 356-1688
Fax: (814) 353-1309

Catalog No.: 30216 **Lot No.:** A035108

Description: Vinyl Acetate Standard

Expiration Date[1]: December 2009 **Storage:** Freezer

Elution Order	Compound	CAS#	Percent Purity[2]	Concentration[3]	Percent Uncertainty[4]
1	Vinyl acetate	108-05-4	99%	2000 ug/mL	+/- 0.1
	Solvent: P&T Methanol	67-56-1	99%		

Column:
105m x .53mm x 3.0um
Rtx-502.2 (cat.#10910)

Carrier Gas:
hydrogen @ 40 cm/sec.

Temp. Program:
40°C (hold 2 min.) to 130°C @ 8°C/min.

Inj. Temp:
200°C

Det. Temp:
250°C

Det. Type:
FID

5E0071
72
73
74

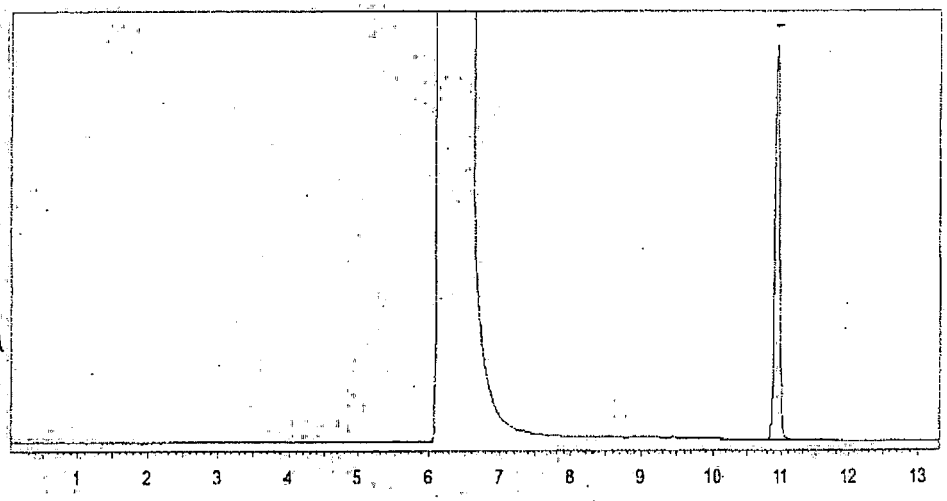

Manufactured By: MEW

John Lidgett - QA Analyst

1 Expiration date of the unopened ampul stored at recommended temperature.
2 Purity was determined by one or more of the following techniques: GC/FID, HPLC, GC/ECD, GC/MS. Value rounded to the nearest LOWER whole percentage. In addtion to detectors listed above, chemical identity and purity are confirmed using 1 or more of the following: MS, DSC, solid probe MS, GC/FPD, GC/NPD, GC/TC, FTIR, melting point, refractive index, and Karl Fisher. See data pack or contact Restek for further details.
3 Based upon gravimetric preperation with balance calibration verified using NISTtraceable weights (7 mass levels).
4 Percent Uncertainty based upon balance AND ASTM Class A volumetric glassware accuracy.

ISO 9001 REGISTERED

Manufactured Under Restek's ISO 9001 Registered Quality System Certificate #FM80397

Tech Tip:

Vinyl acetate is a volatile organic ester included in the target lists of several US EPA and other methods. Under acidic conditions, esters react with alcohols to form new esters (transesterification). Methanol-based mixes containing halogenated compounds are slightly acidic, so it is important to minimize exposure of vinyl acetate to mixes of halogenated compounds in methanol. For this reason, we offer vinyl acetate in individual solution, and suggest that it be introduced into the working level calibration solution immediately before use. This will minimize problems and ensure more consistent results.

WATER

CERTIFICATE OF ANALYSIS

FOR LABORATORY USE ONLY - READ MSDS PRIOR TO USE

110 Benner Circle
Bellefonte, PA 16823-8812
Tel: (800) 356-1688
Fax: (814) 353-1309

Catalog No.: 30475B **Lot No.:** A031415

Description: 8260B Calibration Mix #2

Expiration Date[1]: January 2008 **Storage:** Freezer

Elution Order	Compound	CAS#	Percent Purity[2]	Concentration (weight/volume)[3]	Percent Uncertainty[4]
1	2-Chloroethyl vinyl ether	110-75-8	99%	2000 ug/mL	+/- 0.04
	Solvent: P&T Methanol	67-56-1	99%		

Column:
105m x .53mm x 3.0um
Rtx-502.2 (cat.#10910)

Carrier Gas:
hydrogen @ 40 cm/sec

Temp. Program:
40°C (hold 2 min.) to 240°C
@ 8°C/min.

Inj. Temp:
200°C

Det. Temp:
250°C

Det. Type:
FID

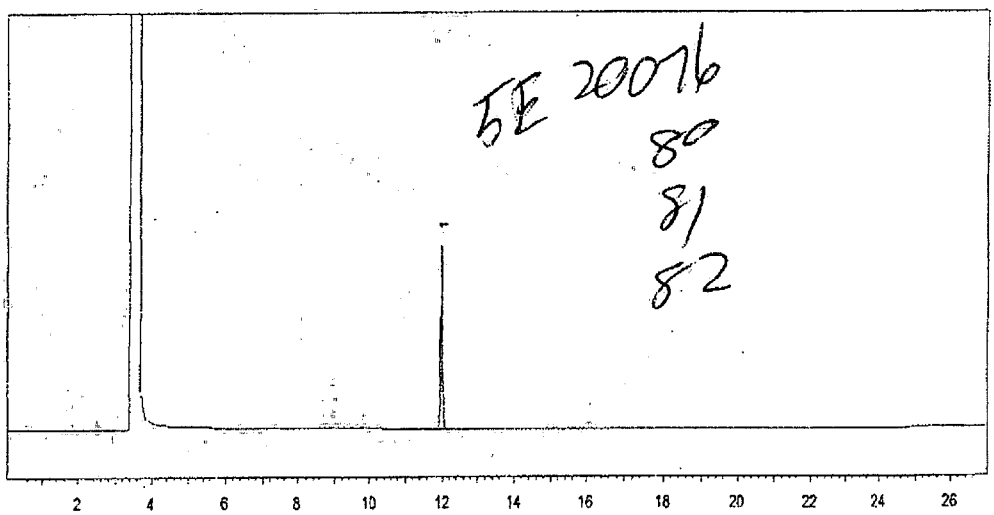

Manufactured By: JAM

John Lidgett - QA Analyst

1 Expiration date of the unopened ampul stored at recommended temperature.
2 Purity was determined by one or more of the following techniques: GC/FID, HPLC, GC/ECD, GC/MS. Value rounded to the nearest LOWER whole percentage. In addtion to defectors listed above, chemical identity and purity are confirmed using 1 or more of the following: MS, DSC, solid probe MS, GC/FPD, GC/NPD, GC/TC, FTIR, melting point, reftactive index, and Karl Fisher. See data pack or contact Restek for further details.
3 Based upon gravimetric preperation with balance calibration verified using NISTtraceable weights (7 mass levels).
4 Percent Uncertainty based upon balance AND ASTM Class A volumetric glassware accuracy.

ISO 9001 REGISTERED

Manufactured Under Restek's ISO 9001 Registered Quality System

WASTE

RESTEK

CERTIFICATE OF ANALYSIS

FOR LABORATORY USE ONLY - READ MSDS PRIOR TO USE

110 Benner Circle
Bellefonte, PA 16823-8812
Tel: (800) 356-1688
Fax: (814) 353-1309

Catalog No.: 30465 **Lot No.:** A031618

Description: California Oxygenates Mixture #1

Expiration Date[1]: April 2007 **Storage:** Freezer

lution Order	Compound	CAS#	Percent Purity[2]	Concentration (weight/volume)[3]	Percent Uncertainty[4]
1	tert-Butanol (TBA)	75-65-0	99%	10000 ug/mL	+/- 0.1
2	Methyl-tert-butyl ether (MTBE)	1634-04-4	99%	2000 ug/mL	+/- 0.1
3	Diisopropyl ether (DIPE)	108-20-3	99%	2000 ug/mL	+/- 0.1
4	Ethyl-tert-butyl ether (ETBE)	637-92-3	99%	2000 ug/mL	+/- 0.1
5	tert-Amyl methyl ether (TAME)	994-05-8	99%	2000 ug/mL	+/- 0.1
	Solvent: P&T Methanol	67-56-1	99%		

Column:
105m x .32mm x 1.8um
Rtx-502.2 (cat.#10921)

Carrier Gas:
helium @ 2.2 ml/min.

Temp. Program:
40°C (hold 2 min.) to 175°C
@ 8°C/min.

. Temp:
200°C

Det. Temp:
250°C

Det. Type:
MSD

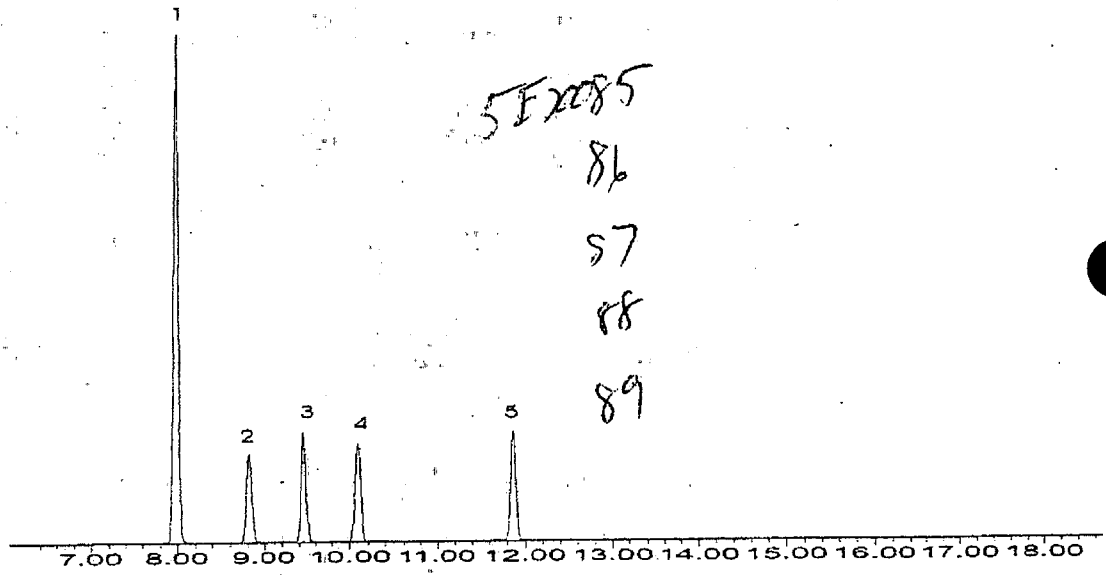

5E2085
86
87
88
89

Manufactured By: MEW

John Lidgett

John Lidgett - QA Analyst

1 Expiration date of the unopened ampul stored at recommended temperature.
2 Purity was determined by one or more of the following techniques: GC/FID, HPLC, GC/ECD, GC/MS. Value rounded to the nearest LOWER whole percentage. In addtion to detectors listed above, chemical identity and purity are confirmed using 1 or more of the following: MS, DSC, solid probe MS, GC/FPD, GC/NPD, GC/TC, FTIR, melting point, reftactive index, and Karl Fisher. See data pack or contact Restek for further details.
3 Based upon gravimetric preperation with balance calibration verified using NISTtraceable weights (7 mass levels).
4 Percent Uncertainty based upon balance AND ASTM Class A volumetric glassware accuracy.

ISO 9001 REGISTERED
Manufactured Under Restek's ISO 9001 Registered Quality System

MASTER

CERTIFICATE OF ANALYSIS

FOR LABORATORY USE ONLY - READ MSDS PRIOR TO USE

110 Benner Circle
Bellefonte, PA 16823-8812
Tel: (800) 356-1688
Fax: (814) 353-1309

Catalog No.: 30499 **Lot No.:** A037729

Description: Acrolein Standard

Expiration Date[1]: October 2005 **Storage:** Freezer

Elution Order	Compound	CAS#	Percent Purity[2]	Concentration[3]	Percent Uncertainty[4]
1	Acrolein	107-02-8	99%	10000 ug/mL	+/- 0.1
	Solvent: P&T Methanol	67-56-1	99%		

Column:
105m x .53mm x 3.0um
Rtx-502.2 (cat.#10910)

Carrier Gas:
hydrogen @ 40 cm/sec

Temp. Program:
40°C (hold 2 min.) to 200°C
@ 8°C/min.

Inj. Temp:
200°C

Det. Temp:
250°C

Det. Type:
FID

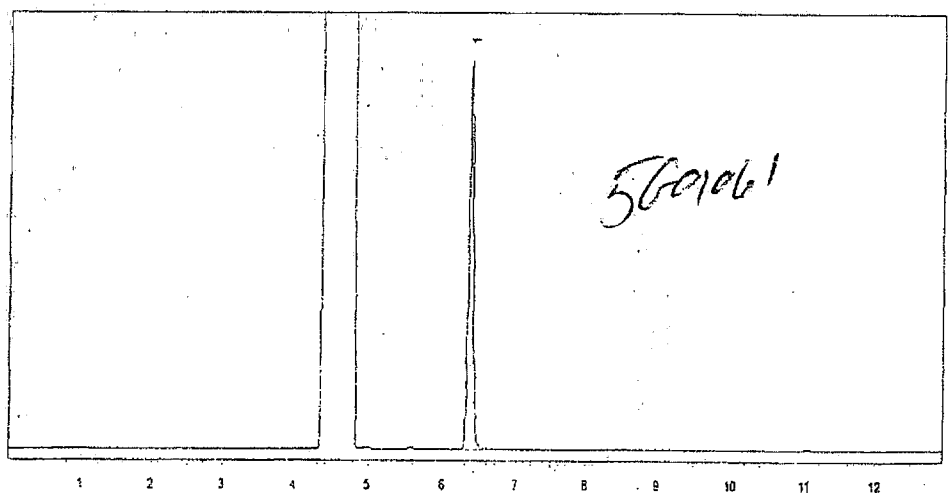

Manufactured By: n/a

John Liggett - Q.A.Analyst

1 Expiration date of the unopened ampul stored at recommended temperature.
2 Purity was determined by one or more of the following techniques: GC/FID, HPLC, GC/ECD, GC/MS. Value rounded to the nearest LOWER whole percentage. In addtion to detectors listed above, chemical identity and purity are confirmed using 1 or more of the following: MS, DSC, solid probe MS, GC/FPD, GC/NPD, GC/TC, FTIR, melting point, refractive index, and Karl Fisher. See data pack or contact Restek for further details.
3 Based upon gravimetric preperation with balance calibration verified using NISTtraceable weights (7 mass levels).
4 Percent Uncertainty based upon balance AND ASTM Class A volumetric glassware accuracy.

ISO 9001 REGISTERED
Manufactured Under Restek's ISO 9001 Registered Quality System
Certificate #FM80397

WASTE

ULTRA SCIENTIFIC
Analytical Solutions

Certificate of Analysis

Internal Standard Mixture

Product STM-520 **Expiration Date:** Jan-2008
Lot Number: CA-2291 **Page:** 1 of 1

This Certified Reference Material (CRM) was manufactured and verified in accordance with ULTRA's ISO 9001:2000 registered quality system, and the analyte concentrations were verified by our ISO 17025 accredited laboratory. The true value and uncertainty value at the 95% confidence level for each analyte, determined gravimetrically, is listed below.

Analyte	CAS#	Analyte Lot	True Value
chlorobenzene-d5	003114-55-4	PR-12098	2509 ± 13 µg/mL
1,4-dichlorobenzene-d4	003855-82-1	16304CA	2503 ± 13 µg/mL
fluorobenzene	000462-06-6	CS10731MG	2507 ± 13 µg/mL

Matrix: methanol (methyl alcohol)

5H01052
53
54
55
56
57
58
59

Balances used in the manufacture of this standard are calibrated with weights traceable to NIST in compliance with ANSI/NCSL Z-540-1 and ISO 9001.

WASTE

Quality System
Quality Endorsed Company
ISO 9001
SAI Global Registered

ACCREDITED
ISO 17025
Cert. No. 0851- 01

250 Smith Street, North Kingstown, RI 02852 USA
401-294-9400 Fax: 401-295-2330
www.ultrasci.com

Dr. Edward Fitzgerald,
Senior Scientist

ULTRA SCIENTIFIC
Analytical Solutions

Certificate of Analysis

Method 8260 Surrogate Standard Mixture

Product STM-530 **Expiration Date:** Jul-2008
Lot Number: CB-1395 **Page:** 1 of 1

This Certified Reference Material (CRM) was manufactured and verified in accordance with ULTRA's ISO 9001:2000 registered quality system, and the analyte concentrations were verified by our ISO 17025 accredited laboratory. The true value and uncertainty value at the 95% confidence level for each analyte, determined gravimetrically, is listed below.

Analyte	CAS#	Analyte Lot	True Value
4-bromofluorobenzene	000460-00-4	11203KS	2503 ± 13 µg/mL
dibromofluoromethane	001868-53-7	90004843	2506 ± 13 µg/mL
1,2-dichloroethane-d4	017060-07-0	PSO2F-623	2508 ± 13 µg/mL
toluene-d8	002037-26-5	PSOAG-433	2506 ± 13 µg/mL

Matrix: methanol (methyl alcohol)

5 H0106

62

63

64

65

66

67

68

Balances used in the manufacture of this standard are calibrated with weights traceable to NIST in compliance with ANSI/NCSL Z-540-1 and ISO 9001.

MASTER

Quality Endorsed Company
ISO 9001
SAI Global Registered

ACCREDITED
ISO 17025
Cert. No. 0851- 01

250 Smith Street, North Kingstown, RI 02852 USA
401-294-9400 Fax: 401-295-2330
www.ultrasci.com

Edward Fitzgerald

Dr. Edward Fitzgerald,
Senior Scientist

ULTRA SCIENTIFIC
Analytical Solutions

Certificate of Analysis

Custom Standard

Product Number: CUS-6492 **Expiration Date:** Apr-2007

Lot Number: CB-0748 **Page:** 1 of 1

This Certified Reference Material (CRM) was manufactured and verified in accordance with ULTRA's ISO 9001:2000 registered quality system. The true value and uncertainty value at the 95% confidence level for each analyte, determined gravimetrically, is listed below.

Analyte	CAS#	Analyte Lot	True Value
diisopropyl ether	000108-20-3	02151KQ	2005 ± 10 µg/mL
ethyl tert-butyl ether	000637-92-3	MN-17917	2006 ± 10 µg/mL
TAME	000994-05-8	JN-12512EN	2005 ± 10 µg/mL
1-chlorohexane	000544-10-5	232-8B	2008 ± 10 µg/mL
cyclohexane	000110-82-7	380707	2005 ± 10 µg/mL
methyl acetate	000079-20-9	I-136A	2004 ± 10 µg/mL
methylcyclohexane	000108-87-2	DR-00844CR	2005 ± 10 µg/mL
1,1,2-trichlorotrifluoroethane	000076-13-1	KN-09246KN	2005 ± 10 µg/mL

Matrix: methanol (methyl alcohol)

5D05060
61.
62
63
64
65
66 67

MASTER

Balances used in the manufacture of this standard are calibrated with weights traceable to NIST in compliance with ANSI/NCSL Z-540-1 and ISO 9001.

Quality System
Quality Endorsed Company
ISO 9001
SAI Global Registered

ACCREDITED
ISO 17025
Cert. No. 0851.01

250 Smith Street, North Kingstown, RI 02852 USA
401-294-9400 Fax: 401-295-2330

Dr. Edward Fitzgerald,
Senior Scientist

ULTRA SCIENTIFIC
Analytical Solutions

Certificate of Analysis

VOC Mixture

Product Number: DWM-592
Lot Number: W-0239

Expiration Date: May-2007
Page: 1 of 2

This Certified Reference Material (CRM) was manufactured and verified in accordance with ULTRA's ISO 9001:2000 registered quality system, and the analyte concentrations were verified by our ISO 17025 accredited laboratory. The true value and uncertainty value at the 95% confidence level for each analyte, determined gravimetrically, is listed below.

Analyte	CAS#	Analyte Lot	True Value
acetone	000067-64-1	43034	2008 ± 10 µg/mL
acrylonitrile	000107-13-1	HI11505EI	2009 ± 10 µg/mL
allyl chloride	000107-05-1	MC070777	2009 ± 10 µg/mL
2-butanone	000078-93-3	CA-02161PO	2010 ± 10 µg/mL
carbon disulfide	000075-15-0	AI12076LU	2008 ± 10 µg/mL
chloroacetonitrile	000107-14-2	CF01026AF	2005 ± 10 µg/mL
1-chlorobutane	000109-69-3	07247HF	2007 ± 10 µg/mL
trans-1,4-dichloro-2-butene	000110-57-6	JN01422DG	2008 ± 10 µg/mL
1,1-dichloro-2-propanone	000513-88-2	LY02111DL	2007 ± 10 µg/mL
diethyl ether	000060-29-7	MA01256EA	2008 ± 10 µg/mL
ethyl methacrylate	000097-63-2	AO09819AS	2008 ± 10 µg/mL
hexachloroethane	000067-72-1	DN06203HF	2005 ± 10 µg/mL
2-hexanone	000591-78-6	AI11228KS	2009 ± 10 µg/mL
methacrylonitrile	000126-98-7	LT00427ET	2009 ± 10 µg/mL
methyl acrylate	000096-33-3	HF01125BF	2008 ± 10 µg/mL
methyl iodide	000074-88-4	KA20329DA	2008 ± 10 µg/mL
methyl methacrylate	000080-62-6	HN03906DN	2007 ± 10 µg/mL
4-methyl-2-pentanone	000108-10-1	05756LQ	2007 ± 10 µg/mL
tert-butylmethyl ether	001634-04-4	36032	2009 ± 10 µg/mL
nitrobenzene	000098-95-3	HK2925LK	2008 ± 10 µg/mL
2-nitropropane	000079-46-9	BZ01727PY	2004 ± 10 µg/mL

Balances used in the manufacture of this standard are calibrated with weights traceable to NIST in compliance with ANSI/NCSL Z-540-1 and ISO 9001.

Quality System
Quality Endorsed Company
ISO 9001
SAI Global Registered

ACCREDITED
ISO 17025
Cert. No. 0851- 01

250 Smith Street, North Kingstown, RI 02852 USA
401-294-9400 Fax: 401-295-2330
www.ultrasci.com

Dr. Edward Fitzgerald,
Senior Scientist

ULTRA SCIENTIFIC
Analytical Solutions

Certificate of Analysis

VOC Mixture

Product Number: DWM-592
Lot Number: W-0239

Expiration Date: May-2007
Page: 2 of 2

Analyte	CAS#	Analyte Lot	True Value
pentachloroethane	000076-01-7	232-36B	2007 ± 10 µg/mL
propionitrile	000107-12-0	BI18125KS	2008 ± 10 µg/mL
tetrahydrofuran	000109-99-9	EN02837AN	2008 ± 10 µg/mL

Matrix: methanol (methyl alcohol)

Balances used in the manufacture of this standard are calibrated with weights traceable to NIST in compliance with ANSI/NCSL Z-540-1 and ISO 9001.

MASTER

Quality System
Quality Endorsed Company
ISO 9001
SAI Global Registered

ACCREDITED
ISO 17025
Cert. No. 0851-01

250 Smith Street, North Kingstown, RI 02852 USA
401-294-9400 Fax: 401-295-2330
www.ultrasci.com

Dr. Edward Fitzgerald,
Senior Scientist

ULTRA SCIENTIFIC
Analytical Solutions

Certificate of Analysis

VOC Mixture

Product Number: DWM-588 **Expiration Date:** Apr-2008

Lot Number: CB-0526 **Page:** 1 of 3

This Certified Reference Material (CRM) was manufactured and verified in accordance with ULTRA's ISO 9001:2000 registered quality system, and the analyte concentrations were verified by our ISO 17025 accredited laboratory. The true value and uncertainty value at the 95% confidence level for each analyte, determined gravimetrically, is listed below.

Analyte	CAS#	Analyte Lot	True Value
bromochloromethane	000074-97-5	JS-16015HS	2006 ± 10 µg/mL
bromodichloromethane	000075-27-4	DU-14522LS	2006 ± 10 µg/mL
bromoform	000075-25-2	DU-06126KS	2004 ± 10 µg/mL
carbon tetrachloride	000056-23-5	01704MF	2006 ± 10 µg/mL
chloroform	000067-66-3	BS-03041BS	2005 ± 10 µg/mL
dibromochloromethane	000124-48-1	DO-12622CI	2006 ± 10 µg/mL
dibromomethane	000074-95-3	EM-01514TJ	2005 ± 10 µg/mL
methylene chloride	000075-09-2	43041	2006 ± 10 µg/mL
trichlorofluoromethane	000075-69-4	DR-16417BR	2007 ± 10 µg/mL
1,2-dibromoethane	000106-93-4	TB-101777	2006 ± 10 µg/mL
1,1-dichloroethane	000075-34-3	64552/1	2005 ± 10 µg/mL
1,2-dichloroethane	000107-06-2	KN-09446KN	2006 ± 10 µg/mL
1,1-dichloroethene	000075-35-4	CA-02207CA	2005 ± 10 µg/mL
cis-1,2-dichloroethene	000156-59-2	13707BO	2006 ± 10 µg/mL
trans-1,2-dichloroethene	000156-60-5	DO-07817JR	2006 ± 10 µg/mL
1,1,1,2-tetrachloroethane	000630-20-6	CO-12312LI	2005 ± 10 µg/mL
1,1,2,2-tetrachloroethane	000079-34-5	10917TB	2006 ± 10 µg/mL
tetrachloroethene	000127-18-4	PS-00344BR	2006 ± 10 µg/mL
1,1,1-trichloroethane	000071-55-6	LU-13149TR	2006 ± 10 µg/mL
1,1,2-trichloroethane	000079-00-5	JB-0701HH	2006 ± 10 µg/mL
trichloroethene	000079-01-6	KN-08846KN	2005 ± 10 µg/mL

Balances used in the manufacture of this standard are calibrated with weights traceable to NIST in compliance with ANSI/NCSL Z-540-1 and ISO 9001.

Quality Endorsed Company
ISO 9001
SAI Global
Registered

ACCREDITED
ISO 17025
Cert. No. 0851-01

250 Smith Street, North Kingstown, RI 02852 USA
401-294-9400 Fax: 401-295-2330
www.ultrasci.com

Dr. Edward Fitzgerald,
Senior Scientist

ULTRA SCIENTIFIC
Analytical Solutions

Certificate of Analysis

VOC Mixture

Product Number: DWM-588
Lot Number: CB-0526

Expiration Date: Apr-2008

Analyte	CAS#	Analyte Lot	True Value
1,2-dibromo-3-chloropropane	000096-12-8	OGF-01	2006 ± 10 µg/mL
1,2-dichloropropane	000078-87-5	DC-120777	2005 ± 10 µg/mL
1,3-dichloropropane	000142-28-9	PR-17916MR	2006 ± 10 µg/mL
2,2-dichloropropane	000594-20-7	CI-05304BI	2006 ± 10 µg/mL
1,1-dichloropropene	000563-58-6	34768-21	2006 ± 10 µg/mL
cis-1,3-dichloropropene	010061-01-5	35072-03	2007 ± 10 µg/mL
trans-1,3-dichloropropene	010061-02-6	34257-41	2005 ± 10 µg/mL
hexachlorobutadiene	000087-68-3	PB-082017	2006 ± 10 µg/mL
1,2,3-trichloropropane	000096-18-4	EY-01328EY	2006 ± 10 µg/mL
naphthalene	000091-20-3	N960012	2006 ± 10 µg/mL
benzene	000071-43-2	31072	2005 ± 10 µg/mL
n-butylbenzene	000104-51-8	AA-28519CO	2006 ± 10 µg/mL
sec-butylbenzene	000135-98-8	MR-11305DN	2006 ± 10 µg/mL
tert-butylbenzene	000098-06-6	MQ-04010MQ	2005 ± 10 µg/mL
ethylbenzene	000100-41-4	033067	2006 ± 10 µg/mL
isopropylbenzene	000098-82-8	EN-00621TG	2006 ± 10 µg/mL
4-isopropyltoluene	000099-87-6	PP-05104CP	2006 ± 10 µg/mL
n-propylbenzene	000103-65-1	LO-14503MR	2005 ± 10 µg/mL
styrene	000100-42-5	MQ-11228MQ	2005 ± 10 µg/mL
toluene	000108-88-3	34117	2006 ± 10 µg/mL
1,2,4-trimethylbenzene	000095-63-6	BO-13528BI	2006 ± 10 µg/mL
1,3,5-trimethylbenzene	000108-67-8	KM-02011HM	2005 ± 10 µg/mL
o-xylene	000095-47-6	DO-06834CO	2006 ± 10 µg/mL
m-xylene	000108-38-3	DI-00459CI	2005 ± 10 µg/mL

Balances used in the manufacture of this standard are calibrated with weights traceable to NIST in compliance with ANSI/NCSL Z-540-1 and ISO 9001.

Quality System
Quality Endorsed Company
ISO 9001
SAI Global Registered

ACCREDITED
ISO 17025
Cert. No. 0851- 01

250 Smith Street, North Kingstown, RI 02852 USA
401-294-9400 Fax: 401-295-2330
www.ultrasci.com

Dr. Edward Fitzgerald,
Senior Scientist

ULTRA SCIENTIFIC
Analytical Solutions

Certificate of Analysis

VOC Mixture

Product Number: DWM-588
Lot Number: CB-0526

Expiration Date: Apr-2008

Analyte	CAS#	Analyte Lot	True Value
p-xylene	000106-42-3	03747LN	2005 ± 10 µg/mL
1,4-dichlorobenzene	000106-46-7	06205KA	2004 ± 10 µg/mL
bromobenzene	000108-86-1	CG-02513MF	2006 ± 10 µg/mL
chlorobenzene	000108-90-7	63148HZ	2006 ± 10 µg/mL
2-chlorotoluene	000095-49-8	KS-06506BN	2006 ± 10 µg/mL
4-chlorotoluene	000106-43-4	CR-14512LQ	2005 ± 10 µg/mL
1,2-dichlorobenzene	000095-50-1	08946KY	2005 ± 10 µg/mL
1,3-dichlorobenzene	000541-73-1	JN-05902LZ	2006 ± 10 µg/mL
1,2,3-trichlorobenzene	000087-61-6	LI-12912PF	2005 ± 10 µg/mL
1,2,4-trichlorobenzene	000120-82-1	00334TQ	2006 ± 10 µg/mL
bromomethane	000074-83-9	06623AQ	2008 ± 10 µg/mL
chloroethane	000075-00-3	00223KG	2008 ± 10 µg/mL
chloromethane	000074-87-3	07-44048	2008 ± 10 µg/mL
dichlorodifluoromethane	000075-71-8	N960053	2008 ± 10 µg/mL
vinyl chloride	000075-01-4	UN-1086	2009 ± 10 µg/mL

Matrix: methanol (methyl alcohol)

MASTER

Balances used in the manufacture of this standard are calibrated with weights traceable to NIST in compliance with ANSI/NCSL Z-540-1 and ISO 9001.

Quality Endorsed Company
ISO 9001
SAI Global
Registered

ACCREDITED
ISO 17025
Cert. No. 0851-01

250 Smith Street, North Kingstown, RI 02852 USA
401-294-9400 Fax: 401-295-2330
www.ultrasci.com

Dr. Edward Fitzgerald,
Senior Scientist

AccuStandard Inc.
125 Market Street
New Haven, CT 06513
USA

Ph: 203-786-5290
Fax: 203-786-5287
E-mail: usa@accustandard.com
www.accustandard.com

CERTIFICATE OF ANALYSIS

CATALOG NO. M-601C-10X
DESCRIPTION: 2-Chloroethylvinyl ether
LOT: B4100153
SOLVENT: MeOH

EXPIRATION: Oct 20, 2007

The uncertainty in the preparation of this standard is <5% if the concentration is less than or equal to 200µg/mL. For concentrations greater than 200µg/mL the uncertainty is <2%.

Component	CAS #	Purity % (GC/MS)	Gravimetric Concentration[1] (µg/mL)	Analyte Concentration[2] (µg/mL)
2-Chloroethylvinyl ether	110-75-8	99.7	2000	1994

5E20098
99
100
101

ACCUSTANDARD

1. All weights are traceable through National Institute of Standards & Technology, Test No. 822/254480.
2. Analyte Concentration = Purity x Gravimetric Concentration
3. A product with a suffix (-1A, -2B, etc.) on its lot# has had its expiration date extended and is identical to the same lot# without the suffix.

Please note: AccuStandard follows the U.S. conventions in reporting numerical values, on both certificates and labels.

A comma (,) is used to separate units of one-thousand or greater.
A period (.) is used as a decimal place marker.

Certified by: R. Cooper

This product was manufactured to meet the quality system requirements of ISO 9001

AccuStandard Inc.
125 Market Street
New Haven, CT 06513
USA

Ph: 203-786-5290
Fax: 203-786-5287
E-mail: usa@accustandard.com
www.accustandard.com

CERTIFICATE OF ANALYSIS

CATALOG NO. APP-9-007-10X
DESCRIPTION: Acrolein
LOT: B5060041
SOLVENT: MeOH

EXPIRATION: Oct 5, 2005

The uncertainty in the preparation of this standard is <5% if the concentration is less than or equal to 200µg/mL. For concentrations greater than 200µg/mL the uncertainty is <2%.

Component	CAS #	Purity % MFG	Gravimetric Concentration[1] (µg/mL)	Analyte Concentration[2] (µg/mL)
Acrolein	107-02-8	90.0	1112*	1001

560638
39

ACCUSTANDARD

* Weight compensated to 100% purity

1. All weights are traceable through National Institute of Standards & Technology, Test No. 822/254480
2. Analyte Concentration = Purity x Gravimetric Concentration
3. A product with a suffix (-1A, -2B, etc.) on its lot# has had its expiration date extended and is identical to the same lot# without the suffix.

Please note: AccuStandard follows the U.S. conventions in reporting numerical values, on both certificates and labels.

comma (,) is used to separate units of one-thousand or greater.
eriod (.) is used as a decimal place marker.

Certified by: R. Cooper

This product was manufactured to meet the quality system requirements of ISO 9001

AccuStandard Inc.
125 Market Street
New Haven, CT 06513
USA

CERTIFICATE OF ANALYSIS

Ph: 203-786-5290
Fax: 203-786-5287
E-mail: usa@accustandard.com
www.accustandard.com

CATALOG NO. APP-9-211-20X

DESCRIPTION: Vinyl acetate

LOT: B5020138-1A

SOLVENT: MeOH

EXPIRATION: Nov 20, 2005

The uncertainty in the preparation of this standard is <5% if the concentration is less than or equal to 200µg/mL. For concentrations greater than 200µg/mL the uncertainty is <2%.

Component	CAS #	Purity % (GC/FID)	Gravimetric Concentration[1] (µg/mL)	Analyte Concentration[2] (µg/mL)
Vinyl acetate	108-05-4	99.9	2001	1999

5606040
41

AccuStandard

MASTER

1. All weights are traceable through National Institute of Standards & Technology, Test No. 822/254480
2. Analyte Concentration = Purity x Gravimetric Concentration
3. A product with a suffix (-1A, -2B, etc.) on its lot# has had its expiration date extended and is identical to the same lot# without the suffix.

Please note: AccuStandard follows the U.S. conventions in reporting numerical values, on both certificates and labels.

A comma (,) is used to separate units of one-thousand or greater.
A period (.) is used as a decimal place marker.

Certified by: R. Cooper

This product was manufactured to meet the quality system requirements of ISO 9001

QR-ORG/INO-001
Rev. 11/02

ULTRA SCIENTIFIC
Analytical Solutions

Certificate of Analysis

1,4-Dioxane

Product Number: RCC-180 **Expiration Date:** Jan-2008

Lot Number: NT02237 **Page:** 1 of 1

This reference material has been analyzed by high resolution gas chromatography or high performance liquid chromatography, and found to meet the specifications stated below. The uncertainty of the purity measurement is ± 0.5%.

Compound	CAS #	Purity
1,4-dioxane	000123-91-1	99%

Storage: May be stored at room temperature

5G11049

WASTE

Quality System
Quality Endorsed Company
ISO 9001
SAI Global Registered

ACCREDITED
ISO 17025
Cert. No. 0851-01

250 Smith Street, North Kingstown, RI 02852 USA
401-294-9400 Fax: 401-295-2330
www.ultrasci.com

Edward Fitzgerald

Dr. Edward Fitzgerald,
Senior Scientist

Certificate of Analysis

DESCRIPTION: 1,4-Dioxane

MFG. DATE: Nov 2004

CATALOG NO.: 442251 (1)

LOT NO.: LB25729

EXP. DATE: Nov 2007

CAS NUMBER: 123-91-1

MOLECULAR FORMULA: C4H8O2

MOLECULAR WEIGHT: 88.1

PHYSICAL PROPERTIES	ASSAY	
FTIR	Matches: SEA 207	Lib. No.: 1563
GC - Mass Spec	Matches: NIST	Lib. No.: 62899
Purity (2)	99.9%	
Refractive index	1.4213 @ 20.0 deg C	

5C04061

(1) This product is packaged from R472225 Lot number LB11219.

(2) Determined by GC-FID unless otherwise noted.

MASTER

Elwood Doughty

Elwood Doughty
Quality Control Supervisor

Supelco warrants that its products conform to the information contained in this publication. Purchaser must determine the suitability of the product for its particular use. Please see the latest catalog or order invoice and packing slip for additional terms and conditions of sale.

SUPELCO
595 North Harrison Road
Bellefonte, PA 16823-0048 USA
Phone (814) 359-3441

TOPLEVEL PARAMETERS

Method Information For: C:\HPCHEM\1\METHODS\AQ080505.M

Method Sections To Run:

(X) Save Copy of Method With Data
( ) Pre-Run Cmd/Macro =
(X) Data Acquisition
(X) Data Analysis
( ) Post-Run Cmd/Macro =

MS-3

Method Comments:
Method 8260

END OF TOPLEVEL PARAMETERS

INSTRUMENT CONTROL PARAMETERS

Sample Inlet: GC
Injection Source: Manual
Injection Location: Rear
Mass Spectrometer: Enabled

HP5890 Temperature Parameters

Temperatures:	State	Setpoint
Inlet A:	Off	50 C
Inlet B:	On	200 C
Detector A:	Off	50 C
Detector B:	On	280 C
Auxiliary:	Off	50 C

Oven Parameters:

Oven Equib Time:	0.20 minutes
Oven Max:	260 C
Oven State:	On
Cryo State:	Off
Cryo Blast:	Off
Ambient:	25 C

Oven Program:

Initial Temperature:	40 C
Initial Time:	4.00 minutes

Level	Rate (C/minute)	Final Temperature (C)	Final Time (minutes)
1	8.0	150	2.00
2(A)	35.0	220	4.25
3(B)	0.0	0	0.00
Next Run Time:		26.00 minutes	

WASTE

HP5890 Inlet Pressure Programs

GC Pressure Units: psi

Inlet A:

Constant Flow:	Off
Constant Flow Pressure:	0.0 psi
Constant Flow Temperature:	50 C
Initial Pressure:	0.0 psi
Initial Time:	650.00 minutes

Level	Rate (psi/minute)	Final Pressure (psi)	Final Time (minutes)
1	0.00	0.0	0.00
2(A)	0.00	0.0	0.00
3(B)	0.00	0.0	0.00

Total Program Time: 650.00 minutes

Column Length:	30.00 m
Column Diameter:	0.530 mm
Gas:	He
Vacuum Compensation:	Off

Inlet B:

Constant Flow:	On
Constant Flow Pressure:	19.4 psi
Constant Flow Temperature:	40 C
Initial Pressure:	0.0 psi
Initial Time:	650.00 minutes

Level	Rate (psi/minute)	Final Pressure (psi)	Final Time (minutes)
1	0.00	0.0	0.00
2(A)	0.00	0.0	0.00
3(B)	0.00	0.0	0.00

Total Program Time: 650.00 minutes

Column Length:	60.00 m
Column Diameter:	0.250 mm
Gas:	He
Vacuum Compensation:	Off

HP5890 Inlet Split Flow Control

Channel C:
Carrier gas supply for channel C is not linked to a split vent.

Channel D:
Carrier gas supply for channel D is not linked to a split vent.

Channel E:
Carrier gas supply for channel E is not linked to a split vent.

Channel F:
Carrier gas supply for channel F is not linked to a split vent.

HP5890 Packed Column Flow Control

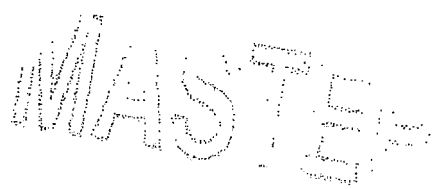

Inlet A not used to control packed column flow.

Inlet B not used to control packed column flow.

HP5890 Auxiliary Pressure Programs

Channel C:
Comment:

Pressure Program:
Initial Pressure: 0.0 psi
Initial Time: 650.00 minutes

Level	Rate (psi/minute)	Final Pressure (psi)	Final Time (minutes)
1	0.00	0.0	0.00
2(A)	0.00	0.0	0.00
3(B)	0.00	0.0	0.00
Total Program Time:		650.00 minutes	

Make-up Gas Compensation: None

Channel D:
Comment:

Pressure Program:
Initial Pressure: 0.0 psi
Initial Time: 650.00 minutes

Level	Rate (psi/minute)	Final Pressure (psi)	Final Time (minutes)
1	0.00	0.0	0.00
2(A)	0.00	0.0	0.00
3(B)	0.00	0.0	0.00
Total Program Time:		650.00 minutes	

Make-up Gas Compensation: None

Channel E:
Comment:

Pressure Program:
Initial Pressure: 0.0 psi
Initial Time: 650.00 minutes

Level	Rate (psi/minute)	Final Pressure (psi)	Final Time (minutes)
1	0.00	0.0	0.00
2(A)	0.00	0.0	0.00
3(B)	0.00	0.0	0.00
Total Program Time:		650.00 minutes	

Make-up Gas Compensation: None

Channel F:
Comment:

Pressure Program:
Initial Pressure: 0.0 psi
Initial Time: 650.00 minutes

Level	Rate (psi/minute)	Final Pressure (psi)	Final Time (minutes)
1	0.00	0.0	0.00
2(A)	0.00	0.0	0.00
3(B)	0.00	0.0	0.00
Total Program Time:		650.00 minutes	

Make-up Gas Compensation: None

WASTE

HP5890 Purge Valve Settings

t Purge	Init Value	On Time	Off Time	Splitless Injection
A	Off	0.00	0.00	No
B	On	0.00	0.00	No

HP5890 Valve and Relay Information

Initial Setpoints:

5890 Valves:

Valve 1: Off	Valve 2: Off	Valve 3: Off	Valve 4: On

19405 Valves:

Valve 5: Off	Valve 6: Off	Valve 7: Off	Valve 8: Off

19405 Relays:

Relay 1: Off	Relay 2: Off	Relay 3: Off	Relay 4: Off

HP5890 Detector Information

Detector	Type	State
A	---	Off
B	---	Off

HP5890 Signal Information

Not saving signal data.

Signal	Source	Peak Width	Data Rate	Start Data	Stop Data
1	Testplot	0.053	5.000	0.00	1.00
2	Testplot	0.053	5.000	0.00	1.00

MS ACQUISITION PARAMETERS

General Information
------- -----------

Tune File : BFB.U
Acquistion Mode : Scan

MS Information
-- -----------

Solvent Delay : 3.70 min

EM Absolute : True
Resulting EM Voltage : 1941.2

[Scan Parameters]

Low Mass : 35
High Mass : 260
Threshold : 800
Sample # : 4 A/D Samples 16
Plot 2 low mass : 50
Plot 2 high mass : 550

WASTE

END OF MS ACQUISITION PARAMETERS

END OF INSTRUMENT CONTROL PARAMETERS

DATA ANALYSIS PARAMETERS

Method Name: C:\HPCHEM\1\METHODS\AQ080505.M

Percent Report Settings

Sort By: Signal

Output Destination
    Screen: No
    Printer: Yes
    File: No

Integration Events: Meth Default

Generate Report During Run Method: No

Signal Correlation Window: 0.020

Qualitative Report Settings

Peak Location of Unknown: Apex

Library to Search	Minimum Quality
c:\database\nbs75k.l	0

Integration Events: Meth Default

Report Type: Summary

Output Destination
    Screen: No
    Printer: Yes
    File: No

Generate Report During Run Method: No

Quantitative Report Settings

Report Type: Summary

Output Destination
    Screen: No
    Printer: No
    File: No

Generate Report During Run Method: Yes

WASTE

ELEMENT ID: 0508010
Calibration Last Updated: Tue Aug 30 15:15:34 2005

Reference Window: 10.00 Percent
Non-Reference Window: 5.00 Percent

Correlation Window: 0.02 minutes
Default Multiplier: 1.00
Default Sample Concentration: 0.00

Compound Information

---

1) Fluorobenzene (ISTD)

Ret. Time 12.61 min., Extract & Integrate from 12.11 to 13.11 min.

Signal	Rel Resp.	Pct. Unc.(abs)	Integration
Tgt 96.00			*** METH DEFAULT ***
Q1 70.00	16.80	30.0	*** METH DEFAULT ***

Lvl ID	Conc (ug/l)	Response
25	25.000	1793239
10	25.000	1801571
5	25.000	1838338
1	25.000	1704091
50	25.000	1818145
100	25.000	1899842
0.5	25.000	1716216

Qualifier Peak Analysis ON ISTD conc: 25.000 ug/l
Curve Fit: Avg. RF

---

2) Dichlorodifluoromethane ( )

Ret. Time 4.15 min., Extract & Integrate from 3.65 to 4.65 min.

Signal	Rel Resp.	Pct. Unc.(abs)	Integration
Tgt 85.00			*** METH DEFAULT ***
Q1 87.00	33.20	30.0	*** METH DEFAULT ***

Lvl ID	Conc (ug/l)	Response
25	25.000	416355
10	10.000	172274
5	5.000	90302
1	1.000	18792
50	50.000	836422
100	100.000	1823963
0.5	not used for this compound	

Qualifier Peak Analysis ON
Curve Fit: Avg. RF

---

3) Chloromethane ( )

Ret. Time 4.46 min., Extract & Integrate from 3.96 to 4.96 min.

Signal	Rel Resp.	Pct. Unc.(abs)	Integration
Tgt 50.00			*** METH DEFAULT ***
Q1 52.00	33.10	30.0	*** METH DEFAULT ***

Lvl ID	Conc (ug/l)	Response
25	25.000	597482
10	10.000	266628
5	5.000	137597
1	1.000	30884
50	50.000	1203850
100	100.000	2480172
0.5	not used for this compound	

Qualifier Peak Analysis ON
Curve Fit: Avg. RF

MASTER

---

4) Vinyl Chloride ( )

Ret. Time 4.79 min., Extract & Integrate from 4.29 to 5.29 min.

Signal		Rel Resp.	Pct. Unc.(abs)	Integration
Tgt	62.00			*** METH DEFAULT ***
Q1	64.00	38.10	30.0	*** METH DEFAULT ***

Lvl	ID	Conc (ug/l)	Response
25		25.000	437518
10		10.000	192044
5		5.000	101731
1		1.000	19224
50		50.000	882458
100		100.000	1837800
0.5		not used for this compound	

Qualifier Peak Analysis ON
Curve Fit: Avg. RF

---

5) Bromomethane ( )

Ret. Time 5.47 min., Extract & Integrate from 4.97 to 5.97 min.

Signal		Rel Resp.	Pct. Unc.(abs)	Integration
Tgt	94.00			*** METH DEFAULT ***
Q1	96.00	95.80	30.0	*** METH DEFAULT ***

Lvl	ID	Conc (ug/l)	Response
25		25.000	301032
10		10.000	135055
5		5.000	77283
1		1.000	18213
[illegible]		50.000	649844
[illegible]		100.000	1436601
0.5		not used for this compound	

Qualifier Peak Analysis ON
Curve Fit: Linear

---

6) Chloroethane ( )

Ret. Time 5.72 min., Extract & Integrate from 5.22 to 6.22 min.

Signal		Rel Resp.	Pct. Unc.(abs)	Integration
Tgt	64.00			*** METH DEFAULT ***
Q1	66.00	32.00	30.0	*** METH DEFAULT ***
Q2	49.00	32.40	30.0	*** METH DEFAULT ***

Lvl	ID	Conc (ug/l)	Response
25		25.000	256692
10		10.000	112808
5		5.000	57979
1		1.000	16574
50		50.000	495501
100		100.000	1066476
0.5		not used for this compound	

Qualifier Peak Analysis ON
Curve Fit: Linear

[illegible] Trichlorofluoromethane ( )

Ret. Time 6.68 min., Extract & Integrate from 6.18 to 7.18 min.

WASTE

Signal		Rel Resp.	Pct. Unc.(abs)	Integration
Tgt	101.00			*** METH DEFAULT ***
Q1	103.00	67.50	30.0	*** METH DEFAULT ***

Lvl	ID	Conc (ug/l)	Response
25		25.000	399557
10		10.000	165001
5		5.000	81556
1		1.000	19818
50		50.000	799662
100		100.000	1678945
0.5		not used for this compound	

Qualifier Peak Analysis ON
Curve Fit: Avg. RF

---

8) Diethyl ether ( )

Ret. Time 7.09 min., Extract & Integrate from 6.59 to 7.59 min.

Signal		Rel Resp.	Pct. Unc.(abs)	Integration
Tgt	59.00			*** METH DEFAULT ***
Q1	45.00	102.20	30.0	*** METH DEFAULT ***
Q2	74.00	63.70	30.0	*** METH DEFAULT ***

Lvl	ID	Conc (ug/l)	Response
25		25.000	220431
10		10.000	102527
5		5.000	52949
1		1.000	18591
50		50.000	468962
100		100.000	1051883
0.5		not used for this compound	

Qualifier Peak Analysis ON
Curve Fit: Linear

---

9) Acrolein ( )

Ret. Time 6.68 min., Extract & Integrate from 6.18 to 7.18 min.

Signal		Rel Resp.	Pct. Unc.(abs)	Integration
Tgt	56.00			*** METH DEFAULT ***
Q1	55.00	71.60	30.0	*** METH DEFAULT ***

Lvl	ID	Conc (ug/l)	Response
25		25.000	42726
10		10.000	18902
5		5.000	-1
1		1.000	-1
50		50.000	72056
100		100.000	165907
0.5		not used for this compound	

Qualifier Peak Analysis ON
Curve Fit: Avg. RF

---

10) Acetone ( )

Ret. Time 6.88 min., Extract & Integrate from 6.38 to 7.38 min.

Signal		Rel Resp.	Pct. Unc.(abs)	Integration
Tgt	58.00			*** METH DEFAULT ***
Q1	43.00	388.40	30.0	*** METH DEFAULT ***

Lvl	ID	Conc (ug/l)	Response
25		125.000	99057
10		50.000	47222
5		25.000	30787
1		5.000	-1
50		250.000	176366
100		500.000	382429
[redacted]		not used for this compound	

Qualifier Peak Analysis ON
Curve Fit: Linear

---

11) Iodomethane ( )

Ret. Time 7.60 min., Extract & Integrate from 7.10 to 8.10 min.

Signal		Rel Resp.	Pct. Unc.(abs)	Integration
Tgt	142.00			*** METH DEFAULT ***
Q1	126.90	54.90	30.0	*** METH DEFAULT ***
Q2	141.00	15.60	30.0	*** METH DEFAULT ***

Lvl	ID	Conc (ug/l)	Response
25		25.000	500804
10		10.000	206208
5		5.000	106626
1		1.000	31182
50		50.000	1120745
100		100.000	2489139
0.5		not used for this compound	

Qualifier Peak Analysis ON
Curve Fit: Linear

---

12) 1,1,2-Trichloro-1,2,2-trifluoroethane ( )

[redacted] Time 7.88 min., Extract & Integrate from 7.38 to 8.38 min.

Signal		Rel Resp.	Pct. Unc.(abs)	Integration
Tgt	101.00			*** METH DEFAULT ***
Q1	151.00	59.40	30.0	*** METH DEFAULT ***

Lvl	ID	Conc (ug/l)	Response
25		25.000	331875
10		10.000	145444
5		5.000	87959
1		1.000	16874
50		50.000	695665
100		100.000	1381718
0.5		not used for this compound	

Qualifier Peak Analysis ON
Curve Fit: Avg. RF

---

13) Methyl Acetate ( )

Ret. Time 7.90 min., Extract & Integrate from 7.40 to 8.40 min.

Signal		Rel Resp.	Pct. Unc.(abs)	Integration
Tgt	43.00			*** METH DEFAULT ***
Q1	74.00	14.90	30.0	*** METH DEFAULT ***

Lvl	ID	Conc (ug/l)	Response
[redacted]		25.000	226125
[redacted]		10.000	108222
5		5.000	60912
1		1.000	-1

50	50.000	467109
100	100.000	960526
0.5	not used for this compound	

Qualifier Peak Analysis ON
Curve Fit: Avg. RF

---

14) Allyl Chloride ( )

Ret. Time 7.94 min., Extract & Integrate from 7.44 to 8.44 min.

Signal	Rel Resp.	Pct. Unc.(abs)	Integration
Tgt 41.00			*** METH DEFAULT ***
Q1 76.00	25.20	30.0	*** METH DEFAULT ***

Lvl ID	Conc (ug/l)	Response
25	25.000	671399
10	10.000	288531
5	5.000	162257
1	1.000	36376
50	50.000	1561946
100	100.000	3343008
0.5	not used for this compound	

Qualifier Peak Analysis ON
Curve Fit: Avg. RF

---

15) Carbon Disulfide ( )

Ret. Time 8.12 min., Extract & Integrate from 7.62 to 8.62 min.

Signal	Rel Resp.	Pct. Unc.(abs)	Integration
Tgt 76.00			*** METH DEFAULT ***
Q1 78.00	9.40	30.0	*** METH DEFAULT ***

Lvl ID	Conc (ug/l)	Response
25	25.000	1537785
10	10.000	650059
5	5.000	331521
1	1.000	70014
50	50.000	3411160
100	100.000	7456603
0.5	not used for this compound	

Qualifier Peak Analysis ON
Curve Fit: Avg. RF

---

16) 1,1-Dichloroethene ( )

Ret. Time 7.55 min., Extract & Integrate from 7.05 to 8.05 min.

Signal	Rel Resp.	Pct. Unc.(abs)	Integration
Tgt 96.00			*** METH DEFAULT ***
Q1 61.00	114.60	30.0	*** METH DEFAULT ***
Q2 63.00	37.30	30.0	*** METH DEFAULT ***

WASTE

Lvl ID	Conc (ug/l)	Response
25	25.000	300278
10	10.000	128316
5	5.000	62540
1	1.000	20157
50	50.000	621349
100	100.000	1302793
0.5	not used for this compound	

Qualifier Peak Analysis ON

Curve Fit: Linear

---

17) Methylene Chloride ( )

Ret. Time 7.79 min., Extract & Integrate from 7.29 to 8.29 min.

Signal		Rel Resp.	Pct. Unc.(abs)	Integration
Tgt	84.00			*** METH DEFAULT ***
Q1	86.00	64.60	30.0	*** METH DEFAULT ***
Q2	49.00	147.10	30.0	*** METH DEFAULT ***

Lvl	ID	Conc (ug/l)	Response
25		25.000	359532
10		10.000	154815
5		5.000	83431
1		1.000	23476
50		50.000	726794
100		100.000	1554380
0.5		not used for this compound	

Qualifier Peak Analysis ON
Curve Fit: Linear

---

18) Methyl tert-Butyl Ether ( )

Ret. Time 9.06 min., Extract & Integrate from 8.56 to 9.56 min.

Signal		Rel Resp.	Pct. Unc.(abs)	Integration
Tgt	73.00			*** METH DEFAULT ***
Q1	57.00	25.90	30.0	*** METH DEFAULT ***
Q2	41.00	29.90	30.0	*** METH DEFAULT ***

Lvl	ID	Conc (ug/l)	Response
25		25.000	800869
[redacted]		10.000	335324
[redacted]		5.000	149753
1		1.000	31545
50		50.000	1817014
100		100.000	4152248
0.5		not used for this compound	

Qualifier Peak Analysis ON
Curve Fit: Avg. RF

---

19) Acrylonitrile ( )

Ret. Time 7.66 min., Extract & Integrate from 7.16 to 8.16 min.

Signal		Rel Resp.	Pct. Unc.(abs)	Integration
Tgt	53.00			*** METH DEFAULT ***
Q1	52.00	82.60	30.0	*** METH DEFAULT ***
Q2	51.00	38.40	30.0	*** METH DEFAULT ***

Lvl	ID	Conc (ug/l)	Response
25		25.000	92809
10		10.000	44811
5		5.000	23381
1		1.000	-1
50		50.000	190253
100		100.000	405352
0.5		not used for this compound	

WASTE

[redacted]ifier Peak Analysis ON
[redacted]e Fit: Avg. RF

---

20) trans-1,2-Dichloroethene ( )

Ret. Time 8.86 min., Extract & Integrate from 8.36 to 9.36 min.

Signal		Rel Resp.	Pct. Unc.(abs)	Integration
Tgt	96.00			*** METH DEFAULT ***
Q1	61.00	113.30	30.0	*** METH DEFAULT ***
Q2	98.00	66.50	30.0	*** METH DEFAULT ***

Lvl	ID	Conc (ug/l)	Response
25		25.000	473996
10		10.000	200838
5		5.000	97241
1		1.000	18775
50		50.000	1052229
100		100.000	2340829
0.5		not used for this compound	

Qualifier Peak Analysis ON
Curve Fit: Avg. RF

---

21) 1,1-Dichloroethane ( )

Ret. Time 9.25 min., Extract & Integrate from 8.75 to 9.75 min.

Signal		Rel Resp.	Pct. Unc.(abs)	Integration
Tgt	63.00			*** METH DEFAULT ***
Q1	65.00	32.60	30.0	*** METH DEFAULT ***
Q2	83.00	14.40	30.0	*** METH DEFAULT ***

Lvl	ID	Conc (ug/l)	Response
25		25.000	1084415
10		10.000	469088
5		5.000	228337
1		1.000	50777
50		50.000	2235019
100		100.000	4726697
0.5		not used for this compound	

Qualifier Peak Analysis ON
Curve Fit: Avg. RF

---

22) Vinyl Acetate ( )

Ret. Time 9.49 min., Extract & Integrate from 8.99 to 9.99 min.

Signal		Rel Resp.	Pct. Unc.(abs)	Integration
Tgt	43.00			*** METH DEFAULT ***
Q1	86.00	7.10	30.0	*** METH DEFAULT ***

Lvl	ID	Conc (ug/l)	Response
25		25.000	969560
10		10.000	398756
5		5.000	192408
1		1.000	39563
50		50.000	2294813
100		100.000	5426019
0.5		not used for this compound	

Qualifier Peak Analysis ON
Curve Fit: Avg. RF

---

23) Chloroprene ( )

Ret. Time 9.83 min., Extract & Integrate from 9.33 to 10.33 min.

Signal		Rel Resp.	Pct. Unc.(abs)	Integration
Tgt	53.00			*** METH DEFAULT ***
Q1	88.00	66.80	30.0	*** METH DEFAULT ***

Lvl	ID	Conc (ug/l)	Response
25		25.000	730206
10		10.000	278040
[redacted]		5.000	133241
1		1.000	27007
50		50.000	1598316
100		100.000	3503002
0.5		not used for this compound	

Qualifier Peak Analysis ON
Curve Fit: Avg. RF

---

24) 2-Butanone ( )

Ret. Time 9.95 min., Extract & Integrate from 9.45 to 10.45 min.

Signal		Rel Resp.	Pct. Unc.(abs)	Integration
Tgt	72.00			*** METH DEFAULT ***
Q1	43.00	695.40	30.0	*** METH DEFAULT ***

Lvl	ID	Conc (ug/l)	Response
25		125.000	143841
10		50.000	62943
5		25.000	33898
1		5.000	-1
50		250.000	307714
100		500.000	668126
0.5		not used for this compound	

Qualifier Peak Analysis ON
Curve Fit: Avg. RF

---

25) Di-isopropyl ether ( )

Ret. Time 9.98 min., Extract & Integrate from 9.48 to 10.48 min.

Signal		Rel Resp.	Pct. Unc.(abs)	Integration
Tgt	45.00			*** METH DEFAULT ***
Q1	43.00	48.10	30.0	*** METH DEFAULT ***
Q2	87.00	16.50	30.0	*** METH DEFAULT ***

Lvl	ID	Conc (ug/l)	Response
25		25.000	2337668
10		10.000	942710
5		5.000	426010
1		1.000	76440
50		50.000	4992657
100		100.000	10505860
0.5		not used for this compound	

Qualifier Peak Analysis ON
Curve Fit: Avg. RF

---

26) Methacrylonitrile ( )

Ret. Time 10.10 min., Extract & Integrate from 9.60 to 10.60 min.

Signal		Rel Resp.	Pct. Unc.(abs)	Integration
[redacted]	41.00			*** METH DEFAULT ***
[redacted]	67.00	42.30	30.0	*** METH DEFAULT ***

Lvl	ID	Conc (ug/l)	Response

25	25.000	281255
10	10.000	123283
5	5.000	56666
1	1.000	8378
50	50.000	615653
100	100.000	1310989
0.5	not used for this compound	

Qualifier Peak Analysis ON
Curve Fit: Avg. RF

---

27) cis-1,2 Dichloroethene ( )

Ret. Time 10.16 min., Extract & Integrate from 9.66 to 10.66 min.

Signal		Rel Resp.	Pct. Unc.(abs)	Integration
Tgt	96.00			*** METH DEFAULT ***
Q1	61.00	95.50	30.0	*** METH DEFAULT ***
Q2	98.00	66.90	30.0	*** METH DEFAULT ***

Lvl	ID	Conc (ug/l)	Response
25		25.000	558271
10		10.000	219798
5		5.000	109332
1		1.000	21754
50		50.000	1147128
100		100.000	2455295
0.5		not used for this compound	

Qualifier Peak Analysis ON
Curve Fit: Avg. RF

---

28) Methyl Acrylate ( )

Ret. Time 10.59 min., Extract & Integrate from 10.09 to 11.09 min.

Signal		Rel Resp.	Pct. Unc.(abs)	Integration
Tgt	55.00			*** METH DEFAULT ***
Q1	85.00	18.50	30.0	*** METH DEFAULT ***

Lvl	ID	Conc (ug/l)	Response
25		25.000	374149
10		10.000	160341
5		5.000	81772
1		1.000	17877
50		50.000	777455
100		100.000	1646033
0.5		not used for this compound	

Qualifier Peak Analysis ON
Curve Fit: Avg. RF

---

29) Ethyl tertiary-butyl ether ( )

Ret. Time 10.60 min., Extract & Integrate from 10.10 to 11.10 min.

Signal		Rel Resp.	Pct. Unc.(abs)	Integration
Tgt	59.00			*** METH DEFAULT ***
Q1	87.00	41.30	30.0	*** METH DEFAULT ***
Q2	57.00	32.40	30.0	*** METH DEFAULT ***

Lvl	ID	Conc (ug/l)	Response
25		25.000	1452475
10		10.000	584977
5		5.000	267663
1		1.000	46902

WASTED

50	50.000	3036504
100	100.000	6314530
0.5	not used for this compound	

Qualifier Peak Analysis ON
Curve Fit: Avg. RF

[redacted] 2,2-Dichloropropane ( )

Ret. Time 10.60 min., Extract & Integrate from 10.10 to 11.10 min.

Signal	Rel Resp.	Pct. Unc.(abs)	Integration
Tgt 77.00			*** METH DEFAULT ***
Q1 97.00	28.60	30.0	*** METH DEFAULT ***
Q2 41.00	112.10	30.0	*** METH DEFAULT ***

Lvl	ID	Conc (ug/l)	Response
25		25.000	710782
10		10.000	293585
5		5.000	146387
1		1.000	30152
50		50.000	1349364
100		100.000	2709502
0.5	not used for this compound		

Qualifier Peak Analysis ON
Curve Fit: Avg. RF

---

31) Bromochloromethane ( )

Ret. Time 10.39 min., Extract & Integrate from 9.89 to 10.89 min.

Signal	Rel Resp.	Pct. Unc.(abs)	Integration
Tgt 128.00			*** METH DEFAULT ***
[redacted] 49.00	140.90	30.0	*** METH DEFAULT ***
[redacted] 130.00	130.70	30.0	*** METH DEFAULT ***

Lvl	ID	Conc (ug/l)	Response
25		25.000	249703
10		10.000	106943
5		5.000	49929
1		1.000	11192
50		50.000	535335
100		100.000	1137973
0.5	not used for this compound		

Qualifier Peak Analysis ON
Curve Fit: Avg. RF

---

32) Tetrahydrofuran ( )

Ret. Time 11.00 min., Extract & Integrate from 10.50 to 11.50 min.

Signal	Rel Resp.	Pct. Unc.(abs)	Integration
Tgt 42.00			*** METH DEFAULT ***
Q1 72.00	28.80	30.0	*** METH DEFAULT ***

Lvl	ID	Conc (ug/l)	Response
25		25.000	88497
10		10.000	39414
5		5.000	22651
1		1.000	-1
[redacted]		50.000	174067
[redacted]		100.000	441670
0.5	not used for this compound		

Qualifier Peak Analysis ON
Curve Fit: Avg. RF

---

33) Chloroform ( )

Ret. Time 10.48 min., Extract & Integrate from 9.98 to 10.98 min.

Signal	Rel Resp.	Pct. Unc.(abs)	Integration
Tgt 83.00			*** METH DEFAULT ***
Q1 85.00	67.60	30.0	*** METH DEFAULT ***
Q2 47.00	26.00	30.0	*** METH DEFAULT ***

Lvl ID	Conc (ug/l)	Response
25	25.000	995164
10	10.000	420641
5	5.000	198177
1	1.000	46237
50	50.000	1982965
100	100.000	4108998
0.5	not used for this compound	

Qualifier Peak Analysis ON
Curve Fit: Avg. RF

---

34) Dibromofluoromethane(SURR) ( )

Ret. Time 10.66 min., Extract & Integrate from 10.16 to 11.16 min.

Signal	Rel Resp.	Pct. Unc.(abs)	Integration
Tgt 111.00			*** METH DEFAULT ***
Q1 113.00	98.00	30.0	*** METH DEFAULT ***
Q2 192.00	9.60	30.0	*** METH DEFAULT ***

Lvl ID	Conc (ug/l)	Response
25	25.000	561295
10	10.000	234152
5	5.000	115870
1	1.000	25783
50	50.000	1136923
100	100.000	2389781
0.5	0.500	13072

Qualifier Peak Analysis ON
Curve Fit: Avg. RF

---

35) 1-Chlorobutane ( )

Ret. Time 11.63 min., Extract & Integrate from 11.13 to 12.13 min.

Signal	Rel Resp.	Pct. Unc.(abs)	Integration
Tgt 56.00			*** METH DEFAULT ***
Q1 41.00	71.30	30.0	*** METH DEFAULT ***
Q2 43.00	34.30	30.0	*** METH DEFAULT ***

Lvl ID	Conc (ug/l)	Response
25	25.000	1098968
10	10.000	440748
5	5.000	202368
1	1.000	39169
50	50.000	2282885
100	100.000	4790439
0.5	not used for this compound	

Qualifier Peak Analysis ON
Curve Fit: Avg. RF

---

36) 1,1,1-Trichloroethane ( )

Ret. Time 11.64 min., Extract & Integrate from 11.14 to 12.14 min.

Signal	Rel Resp.	Pct. Unc.(abs)	Integration
Tgt 97.00			*** METH DEFAULT ***
[redacted] 99.00	66.20	30.0	*** METH DEFAULT ***
[redacted] 61.00	34.90	30.0	*** METH DEFAULT ***

Lvl	ID	Conc (ug/l)	Response
25		25.000	721155
10		10.000	293809
5		5.000	147853
1		1.000	30957
50		50.000	1440140
100		100.000	2962268
0.5		not used for this compound	

Qualifier Peak Analysis ON
Curve Fit: Avg. RF

---

37) 1,1-Dichloropropene ( )

Ret. Time 11.94 min., Extract & Integrate from 11.44 to 12.44 min.

Signal	Rel Resp.	Pct. Unc.(abs)	Integration
Tgt 75.00			*** METH DEFAULT ***
Q1 110.00	50.40	30.0	*** METH DEFAULT ***
Q2 77.00	31.70	30.0	*** METH DEFAULT ***

Lvl	ID	Conc (ug/l)	Response
25		25.000	632648
10		10.000	249432
5		5.000	115808
[redacted]		1.000	23846
[redacted]		50.000	1371122
100		100.000	2910338
0.5		not used for this compound	

Qualifier Peak Analysis ON
Curve Fit: Avg. RF

---

38) Cyclohexane ( )

Ret. Time 12.07 min., Extract & Integrate from 11.57 to 12.57 min.

Signal	Rel Resp.	Pct. Unc.(abs)	Integration
Tgt 56.00			*** METH DEFAULT ***
Q1 84.00	79.60	30.0	*** METH DEFAULT ***
Q2 41.00	70.50	30.0	*** METH DEFAULT ***

Lvl	ID	Conc (ug/l)	Response
25		25.000	907077
10		10.000	355664
5		5.000	169423
1		1.000	35456
50		50.000	1863476
100		100.000	3891957
0.5		not used for this compound	

Qualifier Peak Analysis ON
Curve Fit: Avg. RF

[redacted]

39) Carbon Tetrachloride ( )

Ret. Time 12.21 min., Extract & Integrate from 12.01 to 12.41 min.

Signal	Rel Resp.	Pct. Unc.(abs)	Integration
Tgt 117.00			*** METH DEFAULT ***
Q1 119.00	95.40	30.0	*** METH DEFAULT ***
Q2 121.00	32.30	30.0	*** METH DEFAULT ***

Lvl ID	Conc (ug/l)	Response
25	25.000	535324
10	10.000	216339
5	5.000	101142
1	1.000	21638
50	50.000	1109861
100	100.000	2361524
0.5	not used for this compound	

Qualifier Peak Analysis ON
Curve Fit: Avg. RF

---

40) Benzene ( )

Ret. Time 12.28 min., Extract & Integrate from 11.78 to 12.78 min.

Signal	Rel Resp.	Pct. Unc.(abs)	Integration
Tgt 78.00			*** METH DEFAULT ***

Lvl ID	Conc (ug/l)	Response
25	25.000	1904939
10	10.000	784884
5	5.000	378428
1	1.000	70104
50	50.000	3854560
100	100.000	8180736
0.5	not used for this compound	

Qualifier Peak Analysis ON
Curve Fit: Avg. RF

---

41) 1,2-Dichloroethane-d4(SURR) ( )

Ret. Time 11.38 min., Extract & Integrate from 10.88 to 11.88 min.

Signal	Rel Resp.	Pct. Unc.(abs)	Integration
Tgt 65.00			*** METH DEFAULT ***
Q1 102.00	38.00	30.0	*** METH DEFAULT ***

Lvl ID	Conc (ug/l)	Response
25	25.000	589788
10	10.000	252323
5	5.000	131353
1	1.000	31041
50	50.000	1195026
100	100.000	2489303
0.5	0.500	14936

Qualifier Peak Analysis ON
Curve Fit: Avg. RF

---

42) 1,2-Dichloroethane ( )

Ret. Time 11.49 min., Extract & Integrate from 11.29 to 11.69 min.

Signal	Rel Resp.	Pct. Unc.(abs)	Integration
Tgt 62.00			*** METH DEFAULT ***
Q1 98.00	15.80	30.0	*** METH DEFAULT ***
Q2 49.00	46.90	30.0	*** METH DEFAULT ***

Lvl	ID	Conc (ug/l)	Response
25		25.000	728730
10		10.000	312418
5		5.000	158587
1		1.000	36484
50		50.000	1471334
[redacted]		100.000	3064482
0.5		not used for this compound	

Qualifier Peak Analysis ON
Curve Fit: Avg. RF

---

43) Tertiary-amyl methyl ether ( )

Ret. Time 12.55 min., Extract & Integrate from 12.05 to 13.05 min.

Signal		Rel Resp.	Pct. Unc.(abs)	Integration
Tgt	73.00			*** METH DEFAULT ***
Q1	43.00	42.10	30.0	*** METH DEFAULT ***
Q2	55.00	23.60	30.0	*** METH DEFAULT ***
Q3	87.00	26.10	30.0	*** METH DEFAULT ***

Lvl	ID	Conc (ug/l)	Response
25		25.000	909250
10		10.000	381598
5		5.000	178280
1		1.000	28156
50		50.000	1984661
100		100.000	4429119
0.5		not used for this compound	

Qualifier Peak Analysis ON
Curve Fit: Avg. RF

[redacted] Trichloroethene ( )

Ret. Time 13.29 min., Extract & Integrate from 12.79 to 13.79 min.

Signal		Rel Resp.	Pct. Unc.(abs)	Integration
Tgt	95.00			*** METH DEFAULT ***
Q1	97.00	66.10	30.0	*** METH DEFAULT ***
Q2	130.00	130.10	30.0	*** METH DEFAULT ***
Q3	132.00	124.60	30.0	*** METH DEFAULT ***

Lvl	ID	Conc (ug/l)	Response
25		25.000	525298
10		10.000	209767
5		5.000	101671
1		1.000	20367
50		50.000	1098688
100		100.000	2293127
0.5		not used for this compound	

Qualifier Peak Analysis ON
Curve Fit: Avg. RF

---

45) 1,2-Dichloropropane ( )

Ret. Time 13.22 min., Extract & Integrate from 12.72 to 13.72 min.

Signal		Rel Resp.	Pct. Unc.(abs)	Integration
[redacted]	63.00			*** METH DEFAULT ***
[redacted]	112.00	6.00	30.0	*** METH DEFAULT ***
Q2	61.00	14.20	30.0	*** METH DEFAULT ***

Lvl	ID	Conc (ug/l)	Response
25		25.000	612692
10		10.000	260437
5		5.000	122156
1		1.000	28518
50		50.000	1253960
100		100.000	2644077
0.5		not used for this compound	

Qualifier Peak Analysis ON
Curve Fit: Avg. RF

---

46) Dibromomethane ( )

Ret. Time 13.16 min., Extract & Integrate from 12.66 to 13.66 min.

Signal	Rel Resp.	Pct. Unc.(abs)	Integration
Tgt 93.00			*** METH DEFAULT ***
Q1 95.00	85.70	30.0	*** METH DEFAULT ***
Q2 174.00	84.70	30.0	*** METH DEFAULT ***

Lvl	ID	Conc (ug/l)	Response
25		25.000	299812
10		10.000	121141
5		5.000	62564
1		1.000	14370
50		50.000	632274
100		100.000	1349994
0.5		not used for this compound	

Qualifier Peak Analysis ON
Curve Fit: Avg. RF

---

47) 2-Nitropropane ( )

Ret. Time 13.31 min., Extract & Integrate from 12.81 to 13.81 min.

Signal	Rel Resp.	Pct. Unc.(abs)	Integration
Tgt 43.00			*** METH DEFAULT ***
Q1 41.00	89.50	30.0	*** METH DEFAULT ***

Lvl	ID	Conc (ug/l)	Response
25		25.000	115216
10		10.000	46205
5		5.000	26023
1		1.000	4671
50		50.000	238414
100		100.000	420606
0.5		not used for this compound	

Qualifier Peak Analysis ON
Curve Fit: Avg. RF

---

48) Bromodichloromethane ( )

Ret. Time 13.35 min., Extract & Integrate from 12.85 to 13.85 min.

Signal	Rel Resp.	Pct. Unc.(abs)	Integration
Tgt 83.00			*** METH DEFAULT ***
Q1 85.00	62.60	30.0	*** METH DEFAULT ***
Q2 127.00	12.70	30.0	*** METH DEFAULT ***

Lvl	ID	Conc (ug/l)	Response
25		25.000	699569
10		10.000	281122
5		5.000	129756

1	1.000	30183
50	50.000	1384589
100	100.000	2844463
0.5	not used for this compound	

Qualifier Peak Analysis ON
Curve Fit: Avg. RF

---

49) 1,4-Dioxane ( )

Ret. Time 13.56 min., Extract & Integrate from 13.06 to 14.06 min.

Signal	Rel Resp.	Pct. Unc.(abs)	Integration
Tgt 88.00			*** METH DEFAULT ***
Q1 58.00	56.10	30.0	*** METH DEFAULT ***
Q2 43.00	70.10	30.0	*** METH DEFAULT ***

Lvl	ID	Conc (ug/l)	Response
25		500.000	33325
10		200.000	22779
5		100.000	11540
1		20.000	6822
50		1000.000	74642
100		1500.000	187314
0.5		not used for this compound	

Qualifier Peak Analysis ON
Curve Fit: Avg. RF

---

50) Methyl Methacrylate ( )

Ret. Time 13.62 min., Extract & Integrate from 13.12 to 14.12 min.

Signal	Rel Resp.	Pct. Unc.(abs)	Integration
[redacted] 41.00			*** METH DEFAULT ***
[redacted] 69.00	57.10	30.0	*** METH DEFAULT ***
Q2 100.00	31.30	30.0	*** METH DEFAULT ***

Lvl	ID	Conc (ug/l)	Response
25		25.000	426428
10		10.000	161949
5		5.000	74582
1		1.000	-1
50		50.000	976712
100		100.000	2135220
0.5		not used for this compound	

Qualifier Peak Analysis ON
Curve Fit: Avg. RF

---

51) 2-Chloroethyl vinyl ether ( )

Ret. Time 14.04 min., Extract & Integrate from 13.54 to 14.54 min.

Signal	Rel Resp.	Pct. Unc.(abs)	Integration
Tgt 63.00			*** METH DEFAULT ***
Q1 65.00	30.70	30.0	*** METH DEFAULT ***
Q2 106.00	34.60	30.0	*** METH DEFAULT ***

Lvl	ID	Conc (ug/l)	Response
25		125.000	1201319
10		50.000	472654
[redacted]		25.000	194776
[redacted]		5.000	-1
50		250.000	2677002
100		500.000	6006774

0.5 not used for this compound

Qualifier Peak Analysis ON
Curve Fit: Avg. RF

---

52) Methyl Cyclohexane ( )

Ret. Time 14.10 min., Extract & Integrate from 13.60 to 14.60 min.

Signal		Rel Resp.	Pct. Unc.(abs)	Integration
Tgt	83.00			*** METH DEFAULT ***
Q1	55.00	85.60	30.0	*** METH DEFAULT ***
Q2	98.00	52.50	30.0	*** METH DEFAULT ***

Lvl	ID	Conc (ug/l)	Response
25		25.000	573799
10		10.000	226672
5		5.000	119751
1		1.000	19461
50		50.000	1188169
100		100.000	2513523
0.5		not used for this compound	

Qualifier Peak Analysis ON
Curve Fit: Avg. RF

---

53) 4-Methyl-2-Pentanone ( )

Ret. Time 14.59 min., Extract & Integrate from 14.39 to 14.79 min.

Signal		Rel Resp.	Pct. Unc.(abs)	Integration
Tgt	58.00			*** METH DEFAULT ***
Q1	43.00	312.30	30.0	*** METH DEFAULT ***
Q2	85.00	38.90	30.0	*** METH DEFAULT ***
Q3	100.00	43.10	30.0	*** METH DEFAULT ***

Lvl	ID	Conc (ug/l)	Response
25		125.000	628870
10		50.000	261111
5		25.000	114609
1		5.000	29151
50		250.000	1393379
100		500.000	3030687
0.5		not used for this compound	

Qualifier Peak Analysis ON
Curve Fit: Avg. RF

---

54) cis-1,3-Dichloropropene ( )

Ret. Time 14.39 min., Extract & Integrate from 13.89 to 14.89 min.

Signal		Rel Resp.	Pct. Unc.(abs)	Integration
Tgt	75.00			*** METH DEFAULT ***
Q1	77.00	31.40	30.0	*** METH DEFAULT ***
Q2	39.00	53.80	30.0	*** METH DEFAULT ***

Lvl	ID	Conc (ug/l)	Response
25		25.000	677818
10		10.000	257094
5		5.000	120916
1		1.000	23281
50		50.000	1483726
100		100.000	3268559
0.5		0.500	11596

Qualifier Peak Analysis ON
Curve Fit: Avg. RF

---

55) trans-1,3-Dichloropropene ( )

Ret. Time 15.08 min., Extract & Integrate from 14.58 to 15.58 min.

Signal		Rel Resp.	Pct. Unc.(abs)	Integration
Tgt	75.00			*** METH DEFAULT ***
Q1	77.00	31.90	30.0	*** METH DEFAULT ***
Q2	39.00	61.90	30.0	*** METH DEFAULT ***

Lvl	ID	Conc (ug/l)	Response
25		25.000	553563
10		10.000	216459
5		5.000	91643
1		1.000	22578
50		50.000	1252755
100		100.000	2813004
0.5		0.500	7469

Qualifier Peak Analysis ON
Curve Fit: Linear

---

56) 1,1,2-Trichloroethane ( )

Ret. Time 15.33 min., Extract & Integrate from 14.83 to 15.83 min.

Signal		Rel Resp.	Pct. Unc.(abs)	Integration
Tgt	83.00			*** METH DEFAULT ***
Q1	97.00	126.30	30.0	*** METH DEFAULT ***
Q2	85.00	62.40	30.0	*** METH DEFAULT ***

Lvl	ID	Conc (ug/l)	Response
[redacted]		25.000	325064
[redacted]		10.000	139694
5		5.000	69384
1		1.000	13659
50		50.000	682634
100		100.000	1473009
0.5		not used for this compound	

Qualifier Peak Analysis ON
Curve Fit: Avg. RF

---

57) Toluene ( )

Ret. Time 15.66 min., Extract & Integrate from 15.16 to 16.16 min.

Signal		Rel Resp.	Pct. Unc.(abs)	Integration
Tgt	92.00			*** METH DEFAULT ***
Q1	91.00	160.60	30.0	*** METH DEFAULT ***
Q2	65.00	14.20	30.0	*** METH DEFAULT ***

Lvl	ID	Conc (ug/l)	Response
25		25.000	1086020
10		10.000	439079
5		5.000	197248
1		1.000	35619
50		50.000	2260646
100		100.000	4739947
0.5		not used for this compound	

[redacted]ifier Peak Analysis ON
Curve Fit: Avg. RF

---

58) Chlorobenzene-d5 (ISTD)

Ret. Time 17.92 min., Extract & Integrate from 17.42 to 18.42 min.

Signal		Rel Resp.	Pct. Unc.(abs)	Integration
Tgt	117.00			*** METH DEFAULT ***
Q1	119.00	31.70	30.0	*** METH DEFAULT ***

Lvl	ID	Conc (ug/l)	Response
25		25.000	1149114
10		25.000	1152088
5		25.000	1198151
1		25.000	1051571
50		25.000	1180885
100		25.000	1210800
0.5		25.000	1056414

Qualifier Peak Analysis ON ISTD conc: 25.000 ug/l
Curve Fit: Avg. RF

---

59) Toluene-d8 (SURR) ( )

Ret. Time 15.54 min., Extract & Integrate from 15.04 to 16.04 min.

Signal		Rel Resp.	Pct. Unc.(abs)	Integration
Tgt	98.00			*** METH DEFAULT ***
Q1	100.00	72.40	30.0	*** METH DEFAULT ***

Lvl	ID	Conc (ug/l)	Response
25		25.000	1457463
10		10.000	566890
5		5.000	248627
1		1.000	44328
50		50.000	3183076
100		100.000	6956506
0.5		0.500	20355

Qualifier Peak Analysis ON
Curve Fit: Avg. RF

---

60) Ethyl Methacrylate ( )

Ret. Time 15.79 min., Extract & Integrate from 15.29 to 16.29 min.

Signal		Rel Resp.	Pct. Unc.(abs)	Integration
Tgt	69.00			*** METH DEFAULT ***
Q1	41.00	91.80	30.0	*** METH DEFAULT ***
Q2	99.00	27.60	30.0	*** METH DEFAULT ***

Lvl	ID	Conc (ug/l)	Response
25		25.000	317915
10		10.000	120387
5		5.000	54326
1		1.000	-1
50		50.000	729766
100		100.000	1581816
0.5		not used for this compound	

Qualifier Peak Analysis ON
Curve Fit: Avg. RF

---

61) 2-Hexanone ( )

Ret. Time 15.99 min., Extract & Integrate from 15.49 to 16.49 min.

Signal		Rel Resp.	Pct. Unc.(abs)	Integration
Tgt	43.00			*** METH DEFAULT ***
Q1	58.00	44.90	30.0	*** METH DEFAULT ***
Q2	57.00	12.90	30.0	*** METH DEFAULT ***
Q3	100.00	9.80	30.0	*** METH DEFAULT ***

Lvl	ID	Conc (ug/l)	Response
[redacted]		125.000	1400232
[redacted]		50.000	572507
5		25.000	264854
1		5.000	52715
50		250.000	2993528
100		500.000	6284389
0.5		not used for this compound	

Qualifier Peak Analysis ON
Curve Fit: Avg. RF

---

62) 1,3-Dichloropropane ( )

Ret. Time 15.73 min., Extract & Integrate from 15.53 to 15.93 min.

Signal		Rel Resp.	Pct. Unc.(abs)	Integration
Tgt	76.00			*** METH DEFAULT ***
Q1	78.00	33.90	30.0	*** METH DEFAULT ***

Lvl	ID	Conc (ug/l)	Response
25		25.000	636645
10		10.000	276904
5		5.000	139114
1		1.000	25367
50		50.000	1328764
100		100.000	2671607
0.5		not used for this compound	

[redacted]ifier Peak Analysis ON
[redacted]ve Fit: Avg. RF

---

63) Tetrachloroethene ( )

Ret. Time 16.85 min., Extract & Integrate from 16.35 to 17.35 min.

Signal		Rel Resp.	Pct. Unc.(abs)	Integration
Tgt	164.00			*** METH DEFAULT ***
Q1	129.00	119.50	30.0	*** METH DEFAULT ***
Q2	131.00	111.80	30.0	*** METH DEFAULT ***
Q3	166.00	126.10	30.0	*** METH DEFAULT ***

Lvl	ID	Conc (ug/l)	Response
25		25.000	377976
10		10.000	148543
5		5.000	73358
1		1.000	16445
50		50.000	804360
100		100.000	1781312
0.5		not used for this compound	

Qualifier Peak Analysis ON
Curve Fit: Avg. RF

---

64) Dibromochloromethane ( )

[redacted] Time 16.16 min., Extract & Integrate from 15.66 to 16.66 min.

Signal		Rel Resp.	Pct. Unc.(abs)	Integration
Tgt	129.00			*** METH DEFAULT ***

Q1	127.00	75.20	30.0	*** METH DEFAULT ***
Q2	131.00	24.50	30.0	*** METH DEFAULT ***

Lvl	ID	Conc (ug/l)	Response
25		25.000	392387
10		10.000	153553
5		5.000	74019
1		1.000	13781
50		50.000	863711
100		100.000	1921566
0.5		0.500	6279

Qualifier Peak Analysis ON
Curve Fit: Avg. RF

---

65) 1,2-Dibromoethane ( )

Ret. Time 16.57 min., Extract & Integrate from 16.07 to 17.07 min.

Signal		Rel Resp.	Pct. Unc.(abs)	Integration
Tgt	107.00			*** METH DEFAULT ***
Q1	109.00	95.30	30.0	*** METH DEFAULT ***
Q2	188.00	1.90	30.0	*** METH DEFAULT ***

Lvl	ID	Conc (ug/l)	Response
25		25.000	353284
10		10.000	146149
5		5.000	70101
1		1.000	12382
50		50.000	796363
100		100.000	1791032
0.5		not used for this compound	

Qualifier Peak Analysis ON
Curve Fit: Avg. RF

---

66) 1-Chlorohexane ( )

Ret. Time 17.86 min., Extract & Integrate from 17.36 to 18.36 min.

Signal		Rel Resp.	Pct. Unc.(abs)	Integration
Tgt	91.00			*** METH DEFAULT ***
Q1	93.00	33.30	30.0	*** METH DEFAULT ***
Q2	55.00	55.90	30.0	*** METH DEFAULT ***

Lvl	ID	Conc (ug/l)	Response
25		25.000	495953
10		10.000	171862
5		5.000	76808
1		1.000	15541
50		50.000	1082560
100		100.000	-1
0.5		not used for this compound	

Qualifier Peak Analysis ON
Curve Fit: Avg. RF

---

67) Chlorobenzene ( )

Ret. Time 17.98 min., Extract & Integrate from 17.48 to 18.48 min.

Signal		Rel Resp.	Pct. Unc.(abs)	Integration
Tgt	112.00			*** METH DEFAULT ***
Q1	77.00	37.00	30.0	*** METH DEFAULT ***
Q2	114.00	32.80	30.0	*** METH DEFAULT ***

Lvl	ID	Conc (ug/l)	Response
25		25.000	1174907
10		10.000	465819
5		5.000	228308
1		1.000	50309
50		50.000	2445956
100		100.000	5301175
[redacted]		not used for this compound	

Qualifier Peak Analysis ON
Curve Fit: Avg. RF

---

68) 1,1,1,2-Tetrachloroethane ( )

Ret. Time 17.85 min., Extract & Integrate from 17.35 to 18.35 min.

Signal		Rel Resp.	Pct. Unc.(abs)	Integration
Tgt	131.00			*** METH DEFAULT ***
Q1	133.00	93.40	30.0	*** METH DEFAULT ***
Q2	119.00	63.20	30.0	*** METH DEFAULT ***

Lvl	ID	Conc (ug/l)	Response
25		25.000	391021
10		10.000	158174
5		5.000	79069
1		1.000	16868
50		50.000	846551
100		100.000	1888814
0.5		not used for this compound	

Qualifier Peak Analysis ON
Curve Fit: Avg. RF

---

69) Ethylbenzene ( )

[redacted]. Time 18.32 min., Extract & Integrate from 17.82 to 18.82 min.

Signal		Rel Resp.	Pct. Unc.(abs)	Integration
Tgt	91.00			*** METH DEFAULT ***
Q1	106.00	35.90	30.0	*** METH DEFAULT ***

Lvl	ID	Conc (ug/l)	Response
25		25.000	1893065
10		10.000	726723
5		5.000	311946
1		1.000	52033
50		50.000	4103410
100		100.000	8979616
0.5		not used for this compound	

Qualifier Peak Analysis ON
Curve Fit: Linear

---

70) Xylene P,M ( )

Ret. Time 18.66 min., Extract & Integrate from 18.16 to 19.16 min.

Signal		Rel Resp.	Pct. Unc.(abs)	Integration
Tgt	106.00			*** METH DEFAULT ***
Q1	91.00	170.30	30.0	*** METH DEFAULT ***

Lvl	ID	Conc (ug/l)	Response
[redacted]		50.000	1422204
[redacted]		20.000	550441
5		10.000	240023
1		2.000	35277

50	100.000	3044004
100	200.000	6571882
0.5	not used for this compound	

Qualifier Peak Analysis ON
Curve Fit: Linear

---

71) Xylene O ( )

Ret. Time 19.42 min., Extract & Integrate from 18.92 to 19.92 min.

Signal	Rel Resp.	Pct. Unc.(abs)	Integration
Tgt 106.00			*** METH DEFAULT ***
Q1 91.00	180.90	30.0	*** METH DEFAULT ***

Lvl	ID	Conc (ug/l)	Response
25		25.000	693942
10		10.000	278413
5		5.000	122731
1		1.000	17454
50		50.000	1469054
100		100.000	3137818
0.5	not used for this compound		

Qualifier Peak Analysis ON
Curve Fit: Linear

---

72) Styrene ( )

Ret. Time 19.29 min., Extract & Integrate from 18.79 to 19.79 min.

Signal	Rel Resp.	Pct. Unc.(abs)	Integration
Tgt 104.00			*** METH DEFAULT ***
Q1 78.00	30.20	30.0	*** METH DEFAULT ***

Lvl	ID	Conc (ug/l)	Response
25		25.000	1099006
10		10.000	397107
5		5.000	160783
1		1.000	24153
50		50.000	2427566
100		100.000	5388566
0.5	not used for this compound		

Qualifier Peak Analysis ON
Curve Fit: Linear

---

73) Bromoform ( )

Ret. Time 18.86 min., Extract & Integrate from 18.36 to 19.36 min.

Signal	Rel Resp.	Pct. Unc.(abs)	Integration
Tgt 173.00			*** METH DEFAULT ***
Q1 175.00	46.90	30.0	*** METH DEFAULT ***
Q2 254.00	4.00	30.0	*** METH DEFAULT ***

Lvl	ID	Conc (ug/l)	Response
25		25.000	247606
10		10.000	94230
5		5.000	44415
1		1.000	9375
50		50.000	557107
100		100.000	1276653
0.5	not used for this compound		

Qualifier Peak Analysis ON

Curve Fit: Avg. RF

---

74) cis-1,4-Dichloro-2-butene ( )

Ret. Time 19.11 min., Extract & Integrate from 18.61 to 19.61 min.

Signal		Rel Resp.	Pct. Unc.(abs)	Integration
Tgt	75.00			*** METH DEFAULT ***
Q1	53.00	79.90	30.0	*** METH DEFAULT ***
Q2	88.00	85.10	30.0	*** METH DEFAULT ***

Lvl	ID	Conc (ug/l)	Response
25		25.000	70035
10		10.000	31849
5		5.000	14487
1		1.000	3206
50		50.000	177757
100		100.000	-1
0.5		not used for this compound	

Qualifier Peak Analysis ON
Curve Fit: Avg. RF

---

75) Bromofluorobenzene (SURR) ( )

Ret. Time 20.20 min., Extract & Integrate from 19.70 to 20.70 min.

Signal		Rel Resp.	Pct. Unc.(abs)	Integration
Tgt	95.00			*** METH DEFAULT ***
Q1	174.00	68.90	30.0	*** METH DEFAULT ***
Q2	176.00	63.40	30.0	*** METH DEFAULT ***

Lvl	ID	Conc (ug/l)	Response
25		25.000	618813
[redacted]		10.000	249771
5		5.000	113774
1		1.000	20232
50		50.000	1303299
100		100.000	2673692
0.5		0.500	8751

Qualifier Peak Analysis ON
Curve Fit: Avg. RF

---

76) 1,4 Dichlorobenzene-D4 (ISTD)

Ret. Time 22.11 min., Extract & Integrate from 21.61 to 22.61 min.

Signal		Rel Resp.	Pct. Unc.(abs)	Integration
Tgt	152.00			*** METH DEFAULT ***
Q1	115.00	76.60	30.0	*** METH DEFAULT ***
Q2	150.00	156.60	30.0	*** METH DEFAULT ***

Lvl	ID	Conc (ug/l)	Response
25		25.000	588311
10		25.000	569637
5		25.000	572894
1		25.000	527165
50		25.000	605755
100		25.000	644006
0.5		25.000	505141

[redacted]ifier Peak Analysis ON ISTD conc: 25.000 ug/l
[redacted]ve Fit: Avg. RF

---

77) Trans-1,4-Dichloro-2-Butene ( )

Ret. Time 19.75 min., Extract & Integrate from 19.25 to 20.25 min.

Signal	Rel Resp.	Pct. Unc.(abs)	Integration
Tgt 53.00			*** METH DEFAULT ***
Q1 88.00	52.00	30.0	*** METH DEFAULT ***
Q2 75.00	147.90	30.0	*** METH DEFAULT ***

Lvl ID	Conc (ug/l)	Response
25	25.000	121372
10	10.000	51739
5	5.000	25474
1	1.000	3142
50	50.000	227308
100	100.000	503763
0.5	not used for this compound	

Qualifier Peak Analysis ON
Curve Fit: Avg. RF

---

78) 1,2,3-Trichloropropane ( )

Ret. Time 19.69 min., Extract & Integrate from 19.19 to 20.19 min.

Signal	Rel Resp.	Pct. Unc.(abs)	Integration
Tgt 75.00			*** METH DEFAULT ***
Q1 77.00	32.10	30.0	*** METH DEFAULT ***
Q2 110.00	46.70	30.0	*** METH DEFAULT ***

Lvl ID	Conc (ug/l)	Response
25	25.000	322230
10	10.000	130377
5	5.000	61639
1	1.000	16957
50	50.000	636122
100	100.000	1399251
0.5	not used for this compound	

Qualifier Peak Analysis ON
Curve Fit: Linear

---

79) Isopropylbenzene ( )

Ret. Time 20.14 min., Extract & Integrate from 19.64 to 20.64 min.

Signal	Rel Resp.	Pct. Unc.(abs)	Integration
Tgt 105.00			*** METH DEFAULT ***
Q1 120.00	27.20	30.0	*** METH DEFAULT ***

Lvl ID	Conc (ug/l)	Response
25	25.000	1594156
10	10.000	590306
5	5.000	243620
1	1.000	33892
50	50.000	3528560
100	100.000	7744816
0.5	not used for this compound	

Qualifier Peak Analysis ON
Curve Fit: Linear

---

80) Bromobenzene ( )

Ret. Time 20.55 min., Extract & Integrate from 20.05 to 21.05 min.

Signal	Rel Resp.	Pct. Unc.(abs)	Integration
Tgt 156.00			*** METH DEFAULT ***
Q1 77.00	104.60	30.0	*** METH DEFAULT ***
Q2 158.00	98.30	30.0	*** METH DEFAULT ***

Lvl ID	Conc (ug/l)	Response
25	25.000	487021
[redacted]	10.000	186519
5	5.000	81412
1	1.000	15101
50	50.000	1085416
100	100.000	2405392
0.5	not used for this compound	

Qualifier Peak Analysis ON
Curve Fit: Avg. RF

---

81) 1,1,2,2-Tetrachloroethane ( )

Ret. Time 19.41 min., Extract & Integrate from 18.91 to 19.91 min.

Signal	Rel Resp.	Pct. Unc.(abs)	Integration
Tgt 83.00			*** METH DEFAULT ***
Q1 131.00	12.30	30.0	*** METH DEFAULT ***
Q2 85.00	63.10	30.0	*** METH DEFAULT ***

Lvl ID	Conc (ug/l)	Response
25	25.000	417593
10	10.000	181461
5	5.000	88743
1	1.000	21859
50	50.000	895802
100	100.000	1844826
0.5	0.500	11426

[redacted]ifier Peak Analysis ON
C[redacted]ve Fit: Linear

---

82) n-Propylbenzene ( )

Ret. Time 20.87 min., Extract & Integrate from 20.37 to 21.37 min.

Signal	Rel Resp.	Pct. Unc.(abs)	Integration
Tgt 91.00			*** METH DEFAULT ***
Q1 120.00	25.90	30.0	*** METH DEFAULT ***

Lvl ID	Conc (ug/l)	Response
25	25.000	2113209
10	10.000	787297
5	5.000	337422
1	1.000	49059
50	50.000	4566162
100	100.000	9961710
0.5	not used for this compound	

Qualifier Peak Analysis ON
Curve Fit: Linear

---

83) 2-Chlorotoluene ( )

Ret. Time 21.00 min., Extract & Integrate from 20.50 to 21.50 min.

[redacted]al	Rel Resp.	Pct. Unc.(abs)	Integration
[redacted] 91.00			*** METH DEFAULT ***
Q1 126.00	41.80	30.0	*** METH DEFAULT ***

Lvl	ID	Conc (ug/l)	Response
25		25.000	1353830
10		10.000	539378
5		5.000	239869
1		1.000	40555
50		50.000	2800815
100		100.000	5954898
0.5		not used for this compound	

Qualifier Peak Analysis ON
Curve Fit: Avg. RF

---

84) 4-Chlorotoluene ( )

Ret. Time 21.12 min., Extract & Integrate from 20.62 to 21.62 min.

Signal		Rel Resp.	Pct. Unc.(abs)	Integration
Tgt	91.00			*** METH DEFAULT ***
Q1	126.00	42.70	30.0	*** METH DEFAULT ***

Lvl	ID	Conc (ug/l)	Response
25		25.000	1420409
10		10.000	558637
5		5.000	249781
1		1.000	39577
50		50.000	2921318
100		100.000	6131601
0.5		not used for this compound	

Qualifier Peak Analysis ON
Curve Fit: Avg. RF

---

85) 1,3,5-Trimethylbenzene ( )

Ret. Time 21.31 min., Extract & Integrate from 20.81 to 21.81 min.

Signal		Rel Resp.	Pct. Unc.(abs)	Integration
Tgt	105.00			*** METH DEFAULT ***
Q1	120.00	58.70	30.0	*** METH DEFAULT ***

Lvl	ID	Conc (ug/l)	Response
25		25.000	1362287
10		10.000	526400
5		5.000	222983
1		1.000	28916
50		50.000	2882721
100		100.000	6254356
0.5		not used for this compound	

Qualifier Peak Analysis ON
Curve Fit: Linear

---

86) Pentachloroethane ( )

Ret. Time 21.39 min., Extract & Integrate from 20.89 to 21.89 min.

Signal		Rel Resp.	Pct. Unc.(abs)	Integration
Tgt	119.00			*** METH DEFAULT ***
Q1	117.00	105.30	30.0	*** METH DEFAULT ***
Q2	167.00	84.50	30.0	*** METH DEFAULT ***

Lvl	ID	Conc (ug/l)	Response
25		25.000	288430
10		10.000	119191
5		5.000	56051
1		1.000	11799

50	50.000	616309
100	100.000	1338507
0.5	not used for this compound	

Qualifier Peak Analysis ON
Curve Fit: Avg. RF

[redacted] tert-Butylbenzene ( )

Ret. Time 21.68 min., Extract & Integrate from 21.18 to 22.18 min.

Signal	Rel Resp.	Pct. Unc.(abs)	Integration
Tgt 119.00			*** METH DEFAULT ***
Q1 91.00	52.00	30.0	*** METH DEFAULT ***
Q2 134.00	23.50	30.0	*** METH DEFAULT ***

Lvl ID	Conc (ug/l)	Response
25	25.000	1093230
10	10.000	422799
5	5.000	175015
1	1.000	23912
50	50.000	2385444
100	100.000	5211855
0.5	not used for this compound	

Qualifier Peak Analysis ON
Curve Fit: Linear

---

88) 1,2,4-Trimethylbenzene ( )

Ret. Time 21.83 min., Extract & Integrate from 21.33 to 22.33 min.

Signal	Rel Resp.	Pct. Unc.(abs)	Integration
Tgt 105.00			*** METH DEFAULT ***
[redacted] 120.00	50.30	30.0	*** METH DEFAULT ***

Lvl ID	Conc (ug/l)	Response
25	25.000	1427065
10	10.000	544152
5	5.000	238792
1	1.000	32487
50	50.000	3002805
100	100.000	6409908
0.5	not used for this compound	

Qualifier Peak Analysis ON
Curve Fit: Linear

---

89) sec-Butylbenzene ( )

Ret. Time 21.98 min., Extract & Integrate from 21.48 to 22.48 min.

Signal	Rel Resp.	Pct. Unc.(abs)	Integration
Tgt 105.00			*** METH DEFAULT ***
Q1 134.00	20.40	30.0	*** METH DEFAULT ***

Lvl ID	Conc (ug/l)	Response
25	25.000	1552406
10	10.000	623645
5	5.000	266416
1	1.000	39345
50	50.000	3273552
[redacted]	100.000	7095447
[redacted]	not used for this compound	

Qualifier Peak Analysis ON

Curve Fit: Avg. RF

---

90) 1,3 Dichlorobenzene ( )

Ret. Time 22.07 min., Extract & Integrate from 21.57 to 22.57 min.

Signal	Rel Resp.	Pct. Unc.(abs)	Integration
Tgt 146.00			*** METH DEFAULT ***
Q1 111.00	42.50	30.0	*** METH DEFAULT ***
Q2 148.00	64.50	30.0	*** METH DEFAULT ***

Lvl ID	Conc (ug/l)	Response
25	25.000	868503
10	10.000	352801
5	5.000	158563
1	1.000	34723
50	50.000	1824661
100	100.000	3967013
0.5	not used for this compound	

Qualifier Peak Analysis ON
Curve Fit: Avg. RF

---

91) 4-Isopropyltoluene ( )

Ret. Time 22.22 min., Extract & Integrate from 21.72 to 22.72 min.

Signal	Rel Resp.	Pct. Unc.(abs)	Integration
Tgt 119.00			*** METH DEFAULT ***
Q1 134.00	22.60	30.0	*** METH DEFAULT ***
Q2 91.00	18.70	30.0	*** METH DEFAULT ***

Lvl ID	Conc (ug/l)	Response
25	25.000	1378866
10	10.000	529417
5	5.000	238557
1	1.000	38649
50	50.000	2886552
100	100.000	6026376
0.5	not used for this compound	

Qualifier Peak Analysis ON
Curve Fit: Avg. RF

---

92) 1,4 Dichlorobenzene ( )

Ret. Time 22.16 min., Extract & Integrate from 21.66 to 22.66 min.

Signal	Rel Resp.	Pct. Unc.(abs)	Integration
Tgt 146.00			*** METH DEFAULT ***
Q1 111.00	41.20	30.0	*** METH DEFAULT ***
Q2 148.00	63.70	30.0	*** METH DEFAULT ***

Lvl ID	Conc (ug/l)	Response
25	25.000	899117
10	10.000	367083
5	5.000	178481
1	1.000	39315
50	50.000	1815588
100	100.000	4043026
0.5	not used for this compound	

Qualifier Peak Analysis ON
Curve Fit: Avg. RF

---

93) n-Butylbenzene (.)

Ret. Time 22.77 min., Extract & Integrate from 22.27 to 23.27 min.

Signal		Rel Resp.	Pct. Unc.(abs)	Integration
Tgt	91.00			*** METH DEFAULT ***
Q2	92.00	59.50	30.0	*** METH DEFAULT ***
[redacted]	134.00	27.60	30.0	*** METH DEFAULT ***

Lvl	ID	Conc (ug/l)	Response
25		25.000	1220286
10		10.000	481734
5		5.000	216979
1		1.000	36480
50		50.000	2534892
100		100.000	5411888
0.5		not used for this compound	

Qualifier Peak Analysis ON
Curve Fit: Avg. RF

---

94) 1,2 Dichlorobenzene ( )

Ret. Time 22.64 min., Extract & Integrate from 22.14 to 23.14 min.

Signal		Rel Resp.	Pct. Unc.(abs)	Integration
Tgt	146.00			*** METH DEFAULT ***
Q1	111.00	42.90	30.0	*** METH DEFAULT ***
Q2	148.00	63.90	30.0	*** METH DEFAULT ***

Lvl	ID	Conc (ug/l)	Response
25		25.000	764113
10		10.000	305758
5		5.000	139625
1		1.000	28586
[redacted]		50.000	1623859
[redacted]		100.000	3622555
0.5		not used for this compound	

Qualifier Peak Analysis ON
Curve Fit: Avg. RF

---

95) 1,2-Dibromo-3-Chloropropane ( )

Ret. Time 23.26 min., Extract & Integrate from 22.76 to 23.76 min.

Signal		Rel Resp.	Pct. Unc.(abs)	Integration
Tgt	75.00			*** METH DEFAULT ***
Q1	155.00	129.90	30.0	*** METH DEFAULT ***
Q2	157.00	166.10	30.0	*** METH DEFAULT ***

Lvl	ID	Conc (ug/l)	Response
25		25.000	59974
10		10.000	26954
5		5.000	14735
1		1.000	-1
50		50.000	122449
100		100.000	268077
0.5		not used for this compound	

Qualifier Peak Analysis ON
Curve Fit: Avg. RF

[redacted] Hexachloroethane ( )

Ret. Time 23.35 min., Extract & Integrate from 22.85 to 23.85 min.

Signal		Rel Resp.	Pct. Unc.(abs)	Integration
Tgt	117.00			*** METH DEFAULT ***
Q1	119.00	98.30	30.0	*** METH DEFAULT ***
Q2	201.00	35.70	30.0	*** METH DEFAULT ***

Lvl	ID	Conc (ug/l)	Response
25		25.000	241403
10		10.000	98031
5		5.000	44965
1		1.000	8703
50		50.000	541780
100		100.000	1239041
0.5		not used for this compound	

Qualifier Peak Analysis ON
Curve Fit: Avg. RF

---

97) 1,2,4-Trichlorobenzene ( )

Ret. Time 25.18 min., Extract & Integrate from 24.68 to 25.68 min.

Signal		Rel Resp.	Pct. Unc.(abs)	Integration
Tgt	180.00			*** METH DEFAULT ***
Q1	182.00	88.60	30.0	*** METH DEFAULT ***
Q2	145.00	39.70	30.0	*** METH DEFAULT ***

Lvl	ID	Conc (ug/l)	Response
25		25.000	450909
10		10.000	185804
5		5.000	83302
1		1.000	17048
50		50.000	995540
100		100.000	2279041
0.5		not used for this compound	

Qualifier Peak Analysis ON
Curve Fit: Avg. RF

---

98) Hexachlorobutadiene ( )

Ret. Time 25.65 min., Extract & Integrate from 25.15 to 26.15 min.

Signal		Rel Resp.	Pct. Unc.(abs)	Integration
Tgt	225.00			*** METH DEFAULT ***
Q1	223.00	59.00	30.0	*** METH DEFAULT ***
Q2	227.00	59.90	30.0	*** METH DEFAULT ***

Lvl	ID	Conc (ug/l)	Response
25		25.000	174024
10		10.000	78851
5		5.000	39992
1		1.000	10151
50		50.000	366529
100		100.000	831959
0.5		0.500	3888

Qualifier Peak Analysis ON
Curve Fit: Linear

---

99) Naphthalene ( )

Ret. Time 25.57 min., Extract & Integrate from 25.07 to 26.07 min.

Signal		Rel Resp.	Pct. Unc.(abs)	Integration
Tgt	128.00			*** METH DEFAULT ***

Lvl	ID	Conc (ug/l)	Response
25		25.000	706440
10		10.000	293145
5		5.000	128247
1		1.000	27241
50		50.000	1634760
		100.000	3893262
[redacted]		not used for this compound	

Qualifier Peak Analysis ON
Curve Fit: Avg. RF

---

100) 1,2,3-Trichlorobenzene ( )

Ret. Time 25.88 min., Extract & Integrate from 25.38 to 26.38 min.

Signal		Rel Resp.	Pct. Unc.(abs)	Integration
Tgt	180.00			*** METH DEFAULT ***
Q1	182.00	90.30	30.0	*** METH DEFAULT ***
Q2	145.00	41.40	30.0	*** METH DEFAULT ***

Lvl	ID	Conc (ug/l)	Response
25		25.000	369683
10		10.000	161568
5		5.000	77129
1		1.000	16679
50		50.000	828650
100		100.000	1900077
0.5		not used for this compound	

Qualifier Peak Analysis ON
Curve Fit: Avg. RF

END OF DATA ANALYSIS PARAMETERS

Wed Aug 31 16:40:37 2005

ATTACHMENT C

VOA ESS LABORATORY MS3 RUN LOG

DATE :	05/18/2015	Work orders reported: 1505327,349,406,381									
ANALYST:	ZLC										
METHOD:	AQ040915		MATRIX		Element CAL ID: 1504016						
Surrogate Std:	5E07057		AQUEOUS								
Internal Std:	5E07059										

VIAL #	SAMPLE ID	METHOD	FILE ID	Dilution	STD ID/COMMENTS	pH	BATCH ID	Sequence ID	RW	RPT	IMP BY
10	TUN1	AQ040915	M3604767	1	5E19106	NA	CE51905	CYE0243	ZLC		LLB
11	CCV1	AQ040915	M3604768	1	5E19107	NA	CE51905	CYE0243	ZLC		LLB
12	BS1	AQ040915	M3604769	1	5D27137 20ul/50ml*	NA	CE51905	CYE0243	ZLC		LLB
13	BSD1	AQ040915	M3604770	1	5D27137 20ul/50ml	NA	CE51905	CYE0243	ZLC		LLB
16	TB	AQ040915	M3604771	1		NA	CE51905	CYE0243	ZLC		
17	TB	AQ040915	M3604772	1		NA	CE51905	CYE0243	ZLC		
18	BLK1	AQ040915	M3604773	1		NA	CE51905	CYE0243	ZLC		LLB
19	1505327-06	AQ040915	M3604774	1		NA	CE51905	CYE0243	ZLC	X	LLB
20	1505349-01RE1	AQ040915	M3604775	500	100ul/50mls	<2	CE51905	CYE0243	ZLC	X	LLB
21	1505349-05RE1	AQ040915	M3604776	100	500ul/50mls	<2	CE51905	CYE0243	ZLC	X	LLB
22	1505349-06RE1	AQ040915	M3604777	500	100ul/50mls	<2	CE51905	CYE0243	ZLC	X	LLB
23	1505406-01	AQ040915	M3604778	1		<2	CE51905	CYE0243	ZLC	X	LLB
24	1505381-03	AQ040915	M3604779	1		<2	CE51905	CYE0243	ZLC	X	LLB
25	1505381-04	AQ040915	M3604780	1		<2	CE51905	CYE0243	ZLC	X	
26	1505381-01	AQ040915	M3604781	1	1ML/50MLS	<2	CE51905	CYE0243	ZLC	X	LLB
27	1505381-02	AQ040915	M3604782	1	5MLS/50MLS	<2	CE51905	CYE0243	ZLC	X	LLB
28	TB	AQ040915	M3604783	1	1ML/50MLS	NA	CE51905	CYE0243	ZLC		
29	TB	AQ040915	M3604784	1	250UL/50MLS	NA	CE51905	CYE0243	ZLC		
30	TB	AQ040915	M3604785	1	2.5ML/50MLS	NA	CE51905	CYE0243	ZLC		
31	TB	AQ040915	M3604786	1		NA	CE51905	CYE0243	ZLC		
32	1505327-01RE1	AQ040915	M3604787	100	500ul/50mls	<2	CE51905	CYE0243	ZLC	X	LLB

QUADS: None
SCV: All Pass
BS/BSD: Acetone(H-BS1,BSD1)
CCAL: All Pass
CCAL%D: CHLOROMETHANE>20%. All other compounds >20% on Linear Regression.
Comments: All deletions made due to failed spectra/retention time-ZLC

Control Number 20.0020

Review (includes a check and review of manual integrations)

CLD 5/22/15
eeb

Table II A-1: Specific QC Requirements and Performance Standards for VOCs (SW-846 8260B) Using WSC-CAM-II A

Required QC Parameter	Data Quality Objective	Required Performance Standard	Required Deliverable?	Rejection Criteria per WSC-07-350	Required Corrective Action	Required Analytical Response Action
Initial Demonstration of Proficiency	Laboratory Analytical Accuracy & Precision	(1) Must be performed prior to using method on samples. (2) Must be performed for each matrix. (3) Must contain all target analytes. (4) Must follow procedure in Section 8.4 of SW-846 8000B.	No	NA	Refer to Section 8.4 of SW-846 8000B and Section 1.1.2 of this protocol.	NA
GC/MS Tunes with BFB	Inter-laboratory Consistency & Comparability	(1) Criteria listed in Table 4 of SW-846 8260B (the same criteria must be used for all analyses). (2) Every 12 hours prior to sample analysis.	No	NA	Perform instrument maintenance as necessary; retune instrument.	Suspend all analyses until tuning non-compliance is rectified.
Initial Calibration	Laboratory Analytical Accuracy	(1) Must be analyzed at least once prior to analyzing samples, when initial calibration verification or continuing calibration does not meet the performance standards, and when major instrument maintenance is performed. (2) Minimum of 5 standards (or 6 if non-linear regression used). (3) Low standard must be ≤RL. (4) %RSD ≤20, r ≥0.99 (linear regression), or r^2 ≥0.99 (non-linear regression) for each target analyte. (5) If %RSD >20, linear or non-linear regression must be used. (6) Minimum RFs as per Table 4 of SW-846 8260C for lowest concentration standard and for average RF. (7) Must contain all target analytes. (8) Calibration must be performed under the same conditions as the samples (e.g., heated purge). (9) If autosampler used to spike surrogates in calibration standards, one-point	No	RF <0.05; affects nondetect results for affected analyte in all samples analyzed under this initial calibration.	(1) Recalibrate if >10% of target analytes exceed %RSD, "r", or "r^2" criteria. (2) If ≤10% of compounds exceed criteria, recalibration is not required as long as %RSD <40, r >0.98, or r^2 >0.98. (3) If recalculated concentrations from the lowest calibration standard are outside of 70-130% recovery range, either: • The RL must be reported as an estimated value, or • The RL must be raised to the concentration of the next highest calibration standard that exhibits acceptable recoveries when recalculated using the final calibration curve.	Sample analysis cannot proceed without a valid initial calibration. Report non-conforming compounds (%RSD >20, r <0.99, r^2 <0.99 or minimum RF not met) in laboratory narrative. If non-linear regression (i.e., quadratic equation) is used for calibration, this must be noted in the laboratory narrative along with the compounds affected.

Table II A-1: Specific QC Requirements and Performance Standards for VOCs (SW-846 8260B) Using WSC-CAM-II A

Required QC Parameter	Data Quality Objective	Required Performance Standard	Required Deliverable?	Rejection Criteria per WSC-07-350[1]	Required Corrective Action	Required Analytical Response Action
		calibration with 5 standards acceptable for surrogates. (10) If linear or non-linear regression used, verify the RL by recalculating concentrations in lowest calibration standard using the final calibration curve; recoveries must be 70-130%. (11) SIM: Laboratory must monitor a minimum of two ions per analyte (the primary ion or quantitation ion and a minimum of one confirmation ion); this is required for all target analytes, surrogates and internal standards.				
Initial Calibration Verification	Laboratory Analytical Accuracy	(1) Immediately after each initial calibration. (2) Concentration level near midpoint of curve. (3) Prepared using standard source different than used for initial calibration. (4) Must contain all target analytes. (5) Percent recoveries must be between 70-130% for target analytes except for "difficult" analytes[**] which must exhibit percent recoveries between 40-160%.	No	NA	Locate source of problem; recalibrate if >10% of all analytes are outside of criteria.	If recovery is outside of 70-130% for any analyte, including "difficult" analytes[**], report non-conforming compounds in laboratory narrative.
Continuing Calibration	Laboratory Analytical Accuracy	(1) Every 12 hours prior to the analysis of samples. (2) Concentration level near midpoint of curve. (3) Must contain all target analytes. (4) %D must be ≤20 for each target analyte. (5) Minimum RFs as per Table 4 of SW-846 8260C. (6) Area counts of internal standards in continuing calibration must be between 50 – 200% of the area counts in the associated mid-level initial calibration	No	RF <0.05; affects nondetect results for affected analyte in all samples analyzed under this continuing calibration.	(1) Recalibrate if >20% of target analytes exceed %D criteria. (2) If internal standard is outside of criteria, locate source of problem and reanalyze the continuing calibration. (3) If ≤20% of compounds exceed criteria, recalibration is not required as long as %D	Report non-conforming compounds (%D >20 or minimum RF not met) and associated samples in laboratory narrative.

Table II A-1: Specific QC Requirements and Performance Standards for VOCs (SW-846 8260B) Using WSC-CAM-II A

Required QC Parameter	Data Quality Objective	Required Performance Standard	Required Deliverable?	Rejection Criteria per WSC-07-350	Required Corrective Action	Required Analytical Response Action
		standard.			<40.	
Method Blank	Laboratory Method Sensitivity (contamination evaluation)	(1) Every 20 samples prior to sample analysis and after calibration standards. (2) Matrix and preservative-specific (e.g., water, methanol). (3) Target analytes must be <RL except for common laboratory contaminants (acetone, methylene chloride, and MEK) which must be <5x the RL.	Yes	NA	(1) If concentration of contaminant in sample is <10x concentration in blank, locate source of contamination; correct problem; reanalyze method blank and associated samples. (2) No corrective action required if concentration of contaminant in sample is >10x concentration in blank or if contaminant not detected in sample.	(1) If sample reanalysis is not possible, report non-conformance in laboratory narrative. (2) If contamination of method blanks is suspected or present, the laboratory, using a "B" or some other convention, should qualify the sample results. Blank contamination should also be documented in the laboratory narrative. (3) If re-analysis is performed within holding time and yields acceptable method blank results, the laboratory may report results of the re-analysis only. (4) If re-analysis is performed outside of holding time, the laboratory must report results of both the initial analysis and re-analysis.
Laboratory Control Sample (LCS)	Laboratory Analytical Accuracy	(1) Every 20 samples or for each new tune clock, whichever is more frequent.	Yes	Recovery <10%; affects nondetect	(1) Locate source of problem; reanalyze LCS	(1) If sample reanalysis is not possible, report non-

Table II A-1: Specific QC Requirements and Performance Standards for VOCs (SW-846 8260B) Using WSC-CAM-II A

Required QC Parameter	Data Quality Objective	Required Performance Standard	Required Deliverable?	Rejection Criteria per WSC-07-350	Required Corrective Action	Required Analytical Response Action
		(2) Concentration level near midpoint of curve. (3) Must contain all target analytes. (4) Matrix and preservative-specific (e.g., water, methanol). (5) Percent recoveries must be between 70-130% for target analytes except for "difficult" analytes(**) which must exhibit percent recoveries between 40-160%. (6) Can also be used as continuing calibration. NOTE: If used as continuing calibration standard, must be evaluated using Performance Standards, Corrective Actions, and Analytical Response Actions listed above for Continuing Calibration.		results for affected analyte in all samples analyzed under the LCS.	and associated samples if >10% of all analytes are outside of criteria. (2) If ≤10% of compounds are outside of the acceptance criteria, reanalysis is not required as long as recoveries are >10%. (3) If >10% of compounds are above the acceptance criteria (>130%), reanalysis is not required if affected compounds were not detected in associated samples.	conformance in laboratory narrative. (2) If recovery is outside of 70-130% for any analyte, including "difficult" analytes(**), report non-conforming compounds in laboratory narrative. (3) If re-analysis is performed within holding time and yields acceptable LCS results, the laboratory may report results of the re-analysis only. (4) If re-analysis is performed outside of holding time, the laboratory must report results of both the initial analysis and re-analysis.
LCS Duplicate	Laboratory Analytical Accuracy & Precision	(1) Every 20 samples or for each new tune clock, whichever is more frequent. (2) Concentration level near midpoint of curve. (3) Must contain all target analytes. (4) Matrix and preservative-specific (e.g., water, methanol). (5) Percent recoveries must be between 70-130% for target analytes except for "difficult" analytes(**) which must exhibit percent recoveries between 40-160%. (6) Recommended to be run immediately after LCS in analytical sequence. (7) RPDs must be ≤20 for waters and solid.	Yes	Recovery <10%; affects nondetect results for affected analyte in all samples analyzed under this LCS.	(1) Locate source of problem; reanalyze LCS and associated samples if >10% of all analytes are outside of the recovery acceptance criteria. (2) If ≤10% of compounds are outside of the recovery acceptance criteria, reanalysis is not required as long as recoveries are >10%. (3) If >10% of compounds are above the recovery acceptance criteria (>130%), reanalysis is not	(1) If sample reanalysis is not possible, report non-conformance in laboratory narrative. (2) If recovery is outside of 70-130% for any analyte, including "difficult" analytes(**) or RPD >20 for any analyte, including "difficult" analytes**, report non-conforming compounds in laboratory narrative. (3) If re-analysis is performed within holding

Table II A-1: Specific QC Requirements and Performance Standards for VOCs (SW-846 8260B) Using WSC-CAM-II A

Required QC Parameter	Data Quality Objective	Required Performance Standard	Required Deliverable?	Rejection Criteria per WSC-07-350	Required Corrective Action	Required Analytical Response Action
					required if affected compounds were not detected in associated samples.	time and yields acceptable LCS results, the laboratory may report results of the re-analysis only. (4) If re-analysis is performed outside of holding time, the laboratory must report results of both the initial analysis and re-analysis.
MS/MSD	Method Accuracy & Precision in Sample Matrix	(1) Every 20 samples (at discretion of laboratory or at request of data user). (2) Matrix-specific. (3) Concentration level near midpoint of curve. (4) Must contain all target analytes. (5) Percent recoveries between 70 – 130%. (6) RPDs ≤20 for waters and ≤30 for solids.	Yes ONLY when requested by the data user	Recovery <10%; affects nondetect result for affected analyte in unspiked sample only.	Check LCS; if recoveries are acceptable in LCS, narrate non-conformance.	Note exceedances in laboratory narrative.
Surrogates	Method Accuracy in Sample Matrix	(1) Minimum of 3 surrogates, at retention times across GC run. (2) Percent recoveries must be between 70-130% for individual surrogate compounds.	Yes	Recovery <10%; affects all nondetect VOC results in affected sample.	If one or more surrogates are outside of limits, reanalyze sample unless one of the following exceptions applies: (1) Obvious interference present (e.g., UCM). NOTE: If obvious interference is present and surrogate recovery would cause rejection of data (i.e., <10%), reanalyze sample on dilution. (2) Methanol-preserved samples: re-analysis is not	(1) Report recoveries outside of 70-130% in laboratory narrative. (2) If reanalysis yields similar surrogate non-conformances, the laboratory must report results of both analyses. (3) If reanalysis is performed within holding time and yields acceptable surrogate recoveries, the laboratory may report results of the reanalysis only.

Table II A-1: Specific QC Requirements and Performance Standards for VOCs (SW-846 8260B) Using WSC-CAM-II A

Required QC Parameter	Data Quality Objective	Required Performance Standard	Required Deliverable?	Rejection Criteria per WSC-07-350	Required Corrective Action	Required Analytical Response Action
					required if % moisture >25 and surrogate recovery is >10%. (3) If one or more surrogates exhibit high recoveries and target analytes are not detected in sample, reanalysis is not required.	(4) If reanalysis is performed outside of the holding time and yields acceptable surrogate recoveries, the laboratory must report results of both analyses. (5) If sample is not re-analyzed due to obvious interference, the laboratory must provide the chromatogram in the data report.
Internal Standards	Laboratory Analytical Accuracy and Method Accuracy in Sample Matrix	(1) Minimum of 3 at retention times across GC run. (2) Area counts in samples must be between 50 – 200% of the area counts in the associated continuing calibration standard. (3) Retention times of internal standards must be within ±30 seconds of retention times in associated continuing calibration standard.	No	Recovery <20%; affects all nondetect results quantitated using affected internal standard in associated sample.	If one or more internal standards are outside of limits, reanalyze sample unless obvious interference present (e.g., UCM). NOTE: If obvious interference is present and internal standard area would cause rejection of data (i.e., <20%), reanalyze sample on dilution.	(1) Report nonconformances in laboratory narrative. Include actual recovery of internal standard and provide summary of analytes quantitated using the internal standard. (2) If reanalysis yields similar internal standard non-conformances, the laboratory must report results of both analyses. (3) If reanalysis is performed within holding time and yields acceptable internal standard recoveries, the laboratory may report results of the reanalysis only. (4) If reanalysis is performed outside of the holding time and yields

Table II A-1: Specific QC Requirements and Performance Standards for VOCs (SW-846 8260B) Using WSC-CAM-II A

Required QC Parameter	Data Quality Objective	Required Performance Standard	Required Deliverable?	Rejection Criteria per WSC-07-350[1]	Required Corrective Action	Required Analytical Response Action
						acceptable internal standard recoveries, the laboratory must report results of both analyses. (5) If sample is not reanalyzed due to obvious interference, the laboratory must provide the chromatogram in the data report.
Quantitation	NA	(1) Quantitation must be based on internal standard calibration. (2) The laboratory must use the average response factor, linear or non-linear regression curve generated from the associated initial calibration for quantitation of each analyte. (3) The internal standard used for quantitation must be the one nearest the retention time of the subject analyte. (4) Results must be reported with 2 or more "significant figures" if ≥RL. If reporting values below the RL, report with 1 or more "significant figures".[3]	NA	NA	NA	NA
Identification	NA	Refer to SW-846 8260B, Section 7.6.	NA	NA	NA	NA
General Reporting Issues	NA	(1) The laboratory must only report values ≥ the sample-specific reporting limit; optionally, values below the sample-specific reporting limit can be reported as estimated, if requested. The laboratory must report results for samples and blanks in a consistent manner. (2) Dilutions: If diluted and undiluted analyses are performed, the laboratory	NA	NA	NA	(1) Qualification of the data is required if reporting values below the sample-specific reporting limit. (2) Complete analytical documentation for diluted and undiluted analyses must be made available for review

Table II A-1: Specific QC Requirements and Performance Standards for VOCs (SW-846 8260B) Using WSC-CAM-II A

Required QC Parameter	Data Quality Objective	Required Performance Standard	Required Deliverable?	Rejection Criteria per WSC-07-350[1]	Required Corrective Action	Required Analytical Response Action
		should report results for the lowest dilution within the valid calibration range for each analyte. The associated QC (e.g., method blanks, surrogates, etc.) for each analysis must be reported. (3) Refer to Section 3.3, TICs by GC/MS, for guidance. (4) All soil/sediment sample results preserved in methanol must be corrected for the methanol dilution as per Section 3.2.1 of this CAM protocol. (5) Results for soils/sediments must be reported on a dry-weight basis for comparison to MCP regulatory standards. (6) Refer to Appendix II A-1 for chain-of-custody requirements regarding preservation, cooler temperature, and holding times.				during an audit. (3) TICs will be evaluated at the discretion of the data user consistent with the guidelines presented in Appendix II A-3. (4) The performance of dilutions must be documented in the laboratory narrative or on the report form. Unless due to elevated concentrations of target compounds, reasons for dilutions must be explained in the laboratory narrative. (5) If samples are not properly preserved (pH >2 for aqueous samples, solid samples not completely covered with appropriate preservative) or are not received with an acceptable cooler temperature, note the non-conformances in the laboratory narrative. (6) If samples are preserved and/or analyzed outside of the holding time, note the non-conformances in the laboratory narrative.

** Potentially "difficult" analytes include: acetone, methyl ethyl ketone, 4-methyl-2-pentanone, 2-hexanone, dichlorodifluoromethane, bromomethane, chloromethane, and 1,4-dioxane.

[1] As per Appendix IV of MassDEP Policy #WSC-07-350, *MCP Representativeness Evaluations and Data Usability Assessments*, September 2007, if these results are observed, data users should consider nondetect results as unusable and positive results as estimated with a significant low bias.

[2] If the RL is estimated due to unacceptable recovery of the lowest standard, the CAM RL has not been achieved; Question G of the "MassDEP MCP Analytical Protocol Certification Form" must be answered

Table II A-1: Specific QC Requirements and Performance Standards for VOCs (SW-846 8260B) Using WSC-CAM-II A

Required QC Parameter	Data Quality Objective	Required Performance Standard	Required Deliverable?	Rejection Criteria per WSC-07-350[1]	Required Corrective Action	Required Analytical Response Action

"NO" and this must be addressed in the laboratory narrative.

[3]Reporting protocol for "significant figures" is a policy decision included for standardization and consistency for reporting of results and is not a definition of "significant" in the scientific or mathematical sense.

ATTACHMENT F

Table 1A Specific QA/QC Requirements and Performance Standards for Method 8260*

Required QA/QC Parameter	Data Quality Objective	Required Performance Standard	Required Deliverable	Recommended Corrective Action	Analytical Response Action
GC/MS Tunes with BFB	Inter-laboratory consistency and comparability	1) Criteria listed in Table 4 of SW-846 Method 8260 (the same criteria must be used for all analyses) 2) Every 12 hours	NO	Perform instrument maintenance as necessary; retune instrument	Suspend all analyses until tuning non-compliance is rectified.
Initial Calibration (ICAL)	Laboratory Analytical Accuracy	1) Minimum of 5 standards. (Note 1). Single point calibration allowed for surrogates. 2) Low standard must be ≤ reporting limit (RL) 3) % RSD ≤ 15 or "r" ≥ 0.990 for all compounds except CCC's, which must be ≤ 30% RSD or "r" ≥ 0.990 4) Must contain all target analytes 5) If regression is used, must not be forced through the origin. 6) Minimum RF for all compounds 0.05.	NO	Recalibrate as required by method (1) if any of CCC %RSDs or if any one of CCC "r" <0.990 or (2) if >20% of remaining analytes have %RSD >30 or "r" < 0.990.	Sample analysis cannot proceed without a valid initial calibration. Report non-conforming compounds in case narrative. If the average response factor or linear regression are not used for quantitation (e.g. use of a quadratic equation), this must be noted in narrative with a list of affected analytes.
ICAL Verification Standard	Laboratory Analytical Accuracy	1) Each ICAL must be verified against a second source standard. 2) Std should be at mid-point 3) All target analytes present	NO	1) Compounds must recover within 80-120% 2) Laboratories are allowed to have 20% of compounds out, as long as all compounds within recover 65-135%	1) Perform maintenance as needed, recalibrate. 2) Note outliers in narrative.
Continuing Calibration Std (CCAL)	Laboratory Analytical Accuracy	1) Every 12 hrs prior to analysis of samples 2) Concentration level near midpoint of curve 3) Must contain all target analytes 4) Percent difference or percent drift (%D) must be ≤20 for CCCs and should be ≤30 for all other compounds.	NO	Recalibrate as required by method (1) if %D of any CCC >20 or (2) If %D of >10% of other analytes >30.	Report non-conforming compounds in case narrative.

MASTER

Table 1A Specific QA/QC Requirements and Performance Standards for Method 8260* (continued)

Required QA/QC Parameter	Data Quality Objective	Required Performance Standard	Required Deliverable	Recommended Corrective Action	Analytical Response Action
Method Blanks	Laboratory Contamination Evaluation	1) Every 12-hrs shift or 20 samples, whichever is more frequent, prior to sample analysis and after calibration standards. 2) Matrix and preservative-specific (e.g. water, MeOH, NaHSO4) 3) Target analytes must be <RL except for common lab contaminants which must be <3x the RL (Contaminants are acetone, methylene chloride, and 2-butanone)	YES	Locate source of contamination and correct problem. Reanalyze method blank.	1) Report non-conformances in case narrative. 2) All results for compounds present in method blank must be "B" flagged if detected in samples associated with the method blank.
Laboratory Control Sample (LCS)	Laboratory Method Accuracy	1) Every 20 samples/matrix or for each new tune clock, whichever is more frequent. 2) Concentration level must be near or at the mid-point of the initial calibration. 3) Must contain all target analytes 4) Matrix and preservative specific (e.g. water, MeOH, NaHSO4) 5) Laboratory determined percent recoveries must be between 70-130% for target compounds 6) Can also be used as CCAL 7) Lab may have up to 10% of compounds out of criteria as long as within 40-160% recovery. 8) Laboratories may spike blank soil or water for LCS (No 2nd source requirement)	YES	Recalculate the percent recoveries Reanalyze the LCS Locate & correct problem, reanalyze associated samples	1) Report non-conformances in case narrative. 2) Individual laboratories must identify and document problem analytes which routinely fall outside the 70-130% limit. Any exceedances must be noted in narrative. Data to support laboratory problem compounds kept on file at lab for review during audit
Matrix Spike/Matrix Spike Duplicates (MS/MSD)	Method Accuracy in Sample Matrix Method Precision in Sample Matrix	1) Every 20 samples (Site specific MS/MSD's are strongly recommended 2) Matrix Specific, not required for trip blanks or field blanks 3) Must contain all target analytes 4) Laboratory determined percent recoveries should be between 70-130% for target compounds 5) RPD's should be ≤ 30% 6) Field blanks, trip blanks, etc. cannot be used for MS/MSD's.	YES (When requested)	Compare to LCS recoveries, narrate any non-conformances	Report non-conformances in case narrative

MASTER

Table 1A Specific QA/QC Requirements and Performance Standards for Method 8260* (continued)

Required QA/QC Parameter	Data Quality Objective	Required Performance Standard	Required Deliverable	Recommended Corrective Action	Analytical Response Action
Surrogates	Accuracy in Sample Matrix	1) A minimum of 3 surrogates must be added to all samples, blanks, etc prior to sample introduction 2) Evaluate recoveries in each sample 3) Laboratory determined percent recoveries must be between 70-130% for individual surrogate compounds. Laboratory determined recovery limits may be outside 70-130% limits for difficult matrices (e.g. waste, sludges, etc) 4) Single point calibration allowed allowed for surrogates. See Note 1	YES	If one or more surrogates are outside limits, reanalyze the sample unless one of the following exceptions occurs: 1) For methanol preserved samples reanalysis is not required if moisture >25% and recoveries are >10% 2) If one surrogate exhibits high recovery and associated target compounds are not detected in the sample, report data as is, no reanalysis required.	1) Note exceedances in narrative 2) If reanalysis confirms matrix interference, report both sets of results and note in narrative 3) If reanalysis performed in holding time and surrogate recoveries are in range, report only the compliant data 4) If reanalysis performed outside of holding time and surrogate recoveries are in range, report both sets of data, note in narrative
Internal Standards (IS)	Laboratory Analytical Accuracy and Method Accuracy in Sample	1) Laboratory must use a minimum of 3 IS at retention times across the GC run 2) Area counts in samples must be within –50% to +100% of the area counts in the associated CCAL 3) Retention times of IS must be within ± 30 seconds of the IS retention times in the associated CCAL	NO	If any IS is outside the QC limits, reanalyze the sample	1) Note exceedances in narrative 2) If reanalysis confirms matrix interference, report both sets of results and note in narrative 3) If reanalysis performed in holding time and IS are in criteria, report only the compliant data 4) If reanalysis performed outside of holding time and IS are in criteria, report both sets of data, note in narrative

MASTER

Table 1A Specific QA/QC Requirements and Performance Standards for Method 8260* (continued)

Required QA/QC Parameter	Data Quality Objective	Required Performance Standard	Required Deliverable	Recommended Corrective Action	Analytical Response Action
Quantitation	N/A	1) Quantitation must be based on IS calibration 2) The laboratory must use the average RF or linear regression from the initial calibration for quantitation of each analyte 3) The IS used for quantitation must be the IS nearest to the retention time of the target analyte.	N/A	N/A	1) If the average RF or linear regression was not used for analyte quantitation (e.g. quadratic equation), it must be noted in the narrative along with a list of affected analytes 2) Laboratories must supply example calculations for those cases where the average RF or linear regression was not used
General Reporting Issues	N/A	1) The laboratory should report only concentrations detected above the sample specific RL. 2) Concentrations below the reporting limit (RL) as "ND" with the reporting limit. 3) Dilutions: If diluted and undiluted analyses are performed, the laboratory should report results for both sets of data. Compounds which exceed the linear range should be flagged ("E" flag). Do not report more than 2 sets of data per sample. 4) If a dilution is performed, the highest detected analyte must be in the upper 60% of the calibration curve, unless there are non-target analytes whose concentrations are so high as to cause damage to the instrumentation or saturate the mass spectrometer. 5) Refer to Appendix A for guidance on reporting TIC's	N/A	N/A	1) Qualification of results reported below the RL is required. 2) Performance of dilutions must be documented in the case narrative 3) TIC's will be evaluated according to Appendix A.

MASTER

Notes for Table 1A:

* Refers to latest published version of SW-846 Method 8260.
GC/MS = Gas Chromatography/Mass Spectrometry
BFB = 4-Bromofluorobenzene
%RSD = Relative Percent Standard Deviation
RF = Relative Response Factor
EP = Environmental Professional
r = Correlation Coefficient
RPD = Relative Percent Difference
CCC = Calibration Check Compound
N/A = Not Applicable

Potentially Difficult Compounds include acetone, bromomethane, chloroethane, dichlorodifluoromethane, dibromochloromethane, hexachlorobutadiene, 2-butanone (MEK), 4-methyl-2-pentanone, and trichlorofluoromethane.

Note 1: Six standards are required for a quadratic equation calibration curve, and seven are required for a polynomial fit. In either case the correlation coefficient must be $\geq$ 0.990. Surrogates may be calibrated using a single point, at the same concentration as added to all samples, blanks, etc.

MASTER

ESS Laboratory
Division of Thielsch Engineering
Cranston, RI

SOP NO. 30_6010
INDUCTIVELY COUPLED PLASMA-ATOMIC EMISSION SPECTROSCOPY
(SW 846 METHOD 6010C/ EPA METHOD 200.7/MCP-CAM IIIA)

APPROVED BY:

Operations Manager — Date 6/24/14

QA Manager — Date 6/23/14

Laboratory Director — Date 6/6/14

MASTER

INDUCTIVELY COUPLED PLASMA-ATOMIC EMISSION SPECTROSCOPY (SW 846 METHOD 6010C/ EPA METHOD 200.7/MCP-CAM IIIA)

1.0 SCOPE AND APPLICATION

1.1 Inductively coupled argon plasma analysis (ICP) determines trace elements, including metals, in solution. All matrices, including ground water, aqueous samples, TCLP extracts, industrial and organic wastes, soils, sludge, sediments, and other solid wastes, require digestion prior to analysis, with the possible exception of drinking water.

1.2 Elements for which Methods 6010C/200.7 are applicable are listed in Table 3. Detection limits, sensitivity, and optimum ranges of the metals will vary with the matrices. The data shown in Table 3 provide typical reporting limits for clean aqueous samples.

2.0 METHOD SUMMARY

2.1 Prior to analysis, samples must be solubilized or digested using EPA sample preparation methods 3005A or EPA 200.7 (SOP 30_3005 addresses these methods) for aqueous matrices and method 3050B (SOP 30_3050B) for solids.

2.2 When analyzing for dissolved constituents, acid digestion is not necessary if the samples are filtered and acid preserved prior to analysis; however, it is ESS Laboratory policy to digest all non-potable water samples.

2.3 Method 6010C describes the simultaneous multi-elemental determination of elements by ICP. The method measures element-emitted light by optical spectrometry. Samples are nebulized and the resulting aerosol is transported to the plasma torch. Element-specific atomic-line emission spectra are produced by a radio frequency inductively coupled plasma. The spectra are dispersed by a grating spectrometer, and a photosensitive device monitors the intensities of the lines. Background correction is required for trace element determination. Background must be measured adjacent to analyte lines on samples during analysis. The position selected for the background-intensity measurement, on either or both sides of the analytical line, will be determined by the complexity of the spectrum adjacent to the analyte line. The position used must be free of spectral interference and reflect the same change in background intensity as occurs at the analyte wavelength measured. Background correction is not required in cases of line broadening where a background correction measurement would actually degrade the analytical result. The possibility of additional interferences named in Section 5.0 should also be recognized and appropriate corrections made.

3.0 HEALTH AND SAFETY

3.1 Each employee has been trained and has acknowledged being trained in the safe use and handling of chemicals being used in the laboratory. This training has been

ESS Laboratory. This document may be reproduced solely for internal use.

performed according to the ESS Training SOP 80_0016 and by the Chemical Hygiene Plan, SOP No. 90_0001, in conjunction with the Safety orientation.

3.2 All sample and material handling should be done in a hood while using proper protective equipment to minimize exposure to liquid or vapor. Minimum personnel protective equipment includes the use of laboratory safety glasses, a lab coat or apron, and protective gloves.

3.3 Material Safety Data Sheets for the chemicals used in the laboratory are kept on file in each department and are available for all employees to review.

3.4 The laboratory employee should review proper emergency response to spills or injury prior to attempting this procedure. Employees must know the location of spill kits, eyewashes, showers, and fire fighting equipment. Employees must also have knowledge of disaster evacuation routes.

4.0 SAMPLE PRESERVATION, CONTAINERS, HANDLING AND STORAGE

4.1 Prior to analysis, all aqueous samples are to be field preserved with nitric acid to a pH of less than two. If necessary, SDWA and CWA samples are to be adjusted with nitric acid prior to digestion to pH<2 and sample(s) then held for 24 hours until the pH has stabilized at pH<2, (applicable to EPA Method 2007, per EPA MUR 2012).

4.2 After digestion, samples are stored in specimen containers or Hot Block Tubes.

4.3 Hold time for aqueous preserved samples is 180 days from day of sampling for all metals except mercury. The hold time for samples to be analyzed for mercury is 28 days. Samples prepared and/or analyzed after this date are to be flagged as estimated values.

4.4 Prior to use, all glassware will be soaked in a 10% HNO_3 bath for at least 15 minutes and rinsed a minimum of three times with ICP solution (refer to SOP 30_0001). The HNO_3 bath is checked for contamination on a weekly basis and recorded in the batch log. When aqueous samples are digested by the Hot Block procedure plastic ware is used, so this step may be omitted.

4.5 All results for solid samples are to be corrected for a dry weight determination at 105°C.

4.6 For dissolved metals analysis, a non-preserved sample must be filtered through a 0.45 µm filter within 24 hours of collection and preserved to a pH of less than 2.

MASTER

5.0 INTERFERENCES AND POTENTIAL PROBLEMS

5.1 Spectral interferences are caused by: (1) overlap of a spectral line from another element at the analytical or background measurement wavelengths; (2) unresolved overlap of molecular band spectra; (3) background contribution from continuum or

ESS Laboratory. This document may be reproduced solely for internal use.

recombination phenomena; and (4) stray light from the line emission of high-concentration elements. Computer correcting the raw data after monitoring and measuring the interfering element can compensate for spectral overlap. Unresolved overlap requires selection of an alternative wavelength. Background contribution and stray light can usually be compensated for by a background correction adjacent to the analyte line.

5.1.1 Analysts must verify the absence of spectral interferences from an element in a sample for which there is no instrument detection channel. Laboratory standard wavelengths are listed in Table 3.

5.1.2 Element specific interference is expressed as analyte concentration equivalents (i.e., false analyte concentrations) arising from 100 mg/L of the interference element. For example, assume that Cd is to be determined (at 226.502 nm) in a sample containing approximately 10 mg/L of Fe. 100 mg/L of Fe would yield a false signal for Cd equivalent to approximately 0.007 mg/L. Therefore, the presence of 10 mg/L of Fe would result in a false signal for Cd equivalent to approximately 1 ppb. The interference correction factors should be determined annually. The possibility of interferences other than those determined does exist. The analyst should be aware of these interferences when conducting analyses.

5.1.3 Generally, interferences are discernable if they produced peaks, or background shifts, corresponding to 2% to 5% of the peaks generated by analyte concentrations.

5.2 Physical interferences are effects associated with the sample nebulization and transport processes. Changes in viscosity and surface tension can cause significant inaccuracies, especially in samples containing high dissolved solids or high acid concentrations. This SOP uses yttrium as an internal standard to minimize this effect. Differences in solution volatility can also cause inaccuracies when organic solvents are involved. If physical interferences are present, they must be reduced by diluting the sample. A problem that can occur with high dissolved solids is salt build-up at the top of the nebulizer, which affects aerosol flow rate and causes instrumental drift. Changing the nebulizer and removing salt build-up at the tip of the torch sample injector can be used as a measure to control salt build-up. Control of the argon flow rate does improve instrument performance.

5.3 Chemical interferences include molecular compound formation, ionization effects, and solute vaporization effects. Normally, these effects are not significant with the ICP technique. If observed, they can be minimized by careful selection of operating conditions (incident power, observation position, and so forth), by buffering of the sample, by matrix matching, and by standard addition procedures. Chemical interferences are highly dependent on matrix type and the specific analyte element.

MASTER

ESS Laboratory. This document may be reproduced solely for internal use.

6.0 EQUIPMENT/APPARATUS

6.1 **Inductively coupled argon plasma emission spectrometer with background correction.**

6.1.1 Perkin Elmer Optima 8300 Serial #078S1402114 using an S-10 Autosampler and a Polyscience Chiller, Serial # G54802.

6.2 **Gases**:

6.2.1 Liquid **Argon** gas supply.

6.2.2 Liquid **Nitrogen** gas supply.

6.3 DELETED

6.4 **Class A volumetric flasks**, 50 ml, 100 ml and 250 ml

6.5 **Variable transfer pipettes**, 1.0 to 5.0 ml and 0.1 to 1.0 ml calibrated according to SOP 110.0005. Also, 0.01 ml to 0.1 ml micropipettes

6.6 **Temperature adjustable hot plate and hot blocks,** capable of maintaining a temperature of 95°C.

6.7 **Data system**:

6.7.1 **Computers:** The Metals laboratory has one ICP-AES system analyzing per Method 200.7/6010C. System is a Lenovo ThinkCenter M Series computer with a Windows 7 operating system. All computer systems are networked to a Windows 2012 R2 server, which is the destination for all files.

6.7.2 **Full/Differential/Incremental backups:** Daily backups are incremental, weekly backups are differential, and monthly backups are full. We keep daily backups for 7 days, weekly backups for 7 weeks and monthly backups indefinitely.

6.7.3 **Software:** WINLAB ICP Continuous.

6 REAGENTS AND STANDARDS

6.7 Reagents: reagent grade or better chemicals are used in all tests. If the purity of a reagent is in question, it is analyzed for contamination.

6.7.3 Hydrochloric acid (conc.), HCl: Trace Grade.

6.7.4 Hydrochloric acid (1:1), HCl: Add 500 ml concentrated HCl to 400 ml water and dilute to 1 liter in an appropriate beaker. Never add water to acid.

MASTER

ESS Laboratory. This document may be reproduced solely for internal use.

7.1.3 **Nitric acid (conc.)**, HNO_3: Trace Grade.

7.1.4 **Nitric acid (1:1)**, HNO_3: Add 500 ml concentrated HNO_3 to 400 ml water and dilute to 1 liter in an appropriate beaker. Never add water to acid.

7.1.5 **De-Ionized Water** (DI): The deionized water is prepared using the equipment described in SOP 110.0003 The conductivity must also be checked and recorded according to SOP 110.0003. The lab supervisor needs to be notified if the conductivity is > 0.056 µmhos/cm. At this point, the supervisor will arrange for the cartridges to be replaced, if deemed necessary.

7.1.6 **ICP solution**: Any type of diluting (primary standards or samples) is done using ICP solution. ICP Solution is prepared by adding 400 ml of nitric acid and 600ml of hydrochloric acid to 5.0 liters of DI water in a 20 liter carboy and bringing up to 20 liters with DI water.

7.1.7 **Ghost Wipe**: Environmental Express Part No. 4210.

7.2 **Standards**:

7.2.1 **Primary Stock Solutions:** Solutions are stored at room temperature and not used beyond the manufacturer's expiration date. See manufactures certificate of analysis for concentrations.

Standard	Vendor	Elements
Mixed Standard 1	VHG	Ag, Al, As, B, Ba, Be, Ca, Cd, Co, Cr, Cu, Fe, K, Mg, Mn, Mo, Na, Ni, Pb, Sb, Se, Sn, Ti, Tl, V, Zn
ICCV (see Section 7.2.2.6.)	VHG (another lot) or CPI	Ag, Al, As, B, Ba, Be, Ca, Cd, Co, Cr, Cu, Fe, K, Li, Mg, Mn, Mo, Na, Ni, Pb, Sb, Se, Sn, Ti, Tl, V, Zn

7.2.2 **Working standard solutions** are used to calibrate the instruments. They are prepared daily. Initial analyte concentrations are obtained from the bottle label or the vendor's certificate of analysis. Calibration concentrations may be viewed and/or adjusted in the calibration page of the method editor window (refer to ICP Winlab Software Guide).

MASTER

7.2.2.1 **CAL 1**: ICP Solution (see 7.1.6)

7.2.2.2 **CAL 2**: Add 0.2 ml of Mixed Standard 1 (see 7.2.1) to a 200 ml volumetric flask and dilute to the mark with ICP solution.

7.2.2.3 **CAL 3**: Add 1.0 ml of Mixed Standard 1 (see 7.2.1) to a 200 ml volumetric flask and dilute to the mark with ICP solution. This

ESS Laboratory. This document may be reproduced solely for internal use.

used as the **CCV** (continuing calibration verification) and as the **ICV** (initial calibration verification; see 7.2.2.5).

7.2.2.4 **CAL 4**: Add 1.0 ml of Mixed Standard 1 (see 7.2.1) to a 100 ml volumetric flask and dilute to the mark with ICP solution.

7.2.2.5 **ICV**: See **CAL 3** (see 7.2.2.3).

ICP Standard concentration (mg/L)

Elements	Std 1	Std 2	Std 3	Std 4	Std 5
Be	0.01	0.05	0.10	0.20	0.50
Ag, Cd	0.05	0.25	0.50	1.00	2.50
As, B, Ba, Co, Cr, Cu, Mn, Mo, Ni, Pb, Sb, Sn, Ti, Tl, V, Zn	0.10	0.50	1.00	2.00	5.00
Se	0.20	1.00	2.00	4.00	10.00
Al, Fe	0.50	2.50	5.00	10.00	25.00
Ca, Mg	1.0	5.0	10.0	20.0	50.0
K, Na	5.0	25.0	50.0	100.0	250.0

NOTE: Standards 4 and 5 are used primarily for Ba, Pb, Zn but may also be used for other metals as long as all quality control criteria are met for the element.)

7.2.2.6 The **instrument check standard** (SCV1) is used to verify the instrument calibration. It is prepared by adding 0.5 ml of ICCV (see 7.2.1) to a 100 ml volumetric flask and diluting to the mark with ICP solution (see Section 7.1.6).

7.2.2.7 The **interference check solutions** contain known concentrations of interfering elements, and are run at the beginning of each analytical run in order to test correction factors.

7.2.2.7.1 **IFA** is prepared by adding 12.5 ml of Inorganic Venture's CLP-ICS-A to a 250 ml volumetric flask and diluting to the mark with ICP solution.

7.2.2.7.2 **IFB** is prepared by adding 12.5 ml of Inorganic Venture's CLPP-ICS-A and 1.25 ml of CLPP-ICS-B in a 250 ml volumetric flask and diluting to the mark with ICP solution.

7.2.2.8 Three **CRL Standards** (at the lower limit of quantitation) are used to determine the detection limits below the lowest point of the calibration curve. Three solutions are prepared to cover the range of reporting limits.

MASTER

ESS Laboratory. This document may be reproduced solely for internal use.

7.2.2.8.1 **CRL1** is prepared by adding 25 ml of Standard 1 (see 7.2.2.1) to a 50 ml centrifuge tube and diluting to the 50 ml mark with ICP solution (see Section 7.1.6).

7.2.2.8.2 **CRL2** is prepared by adding 1 ml of Standard 3 (see 7.2.2.3 to a 50 ml centrifuge tube and diluting to the 50 ml mark with ICP solution (see Section 7.1.6).

7.2.2.8.3 **CRL3** is prepared by adding 0.5 ml of Standard 3 (see 7.2.2.3 to a 50 ml centrifuge tube and diluting to the 50 ml mark with ICP solution (see Section 7.1.6).

7.2.2.9 Low Level CCV (MCP & SW846-6010C)

7.2.2.9.1 Identical to CRL Standards (see § 7.2.2.8)

7.3 **Two types of blanks** are required for the analysis. The calibration blank is used in establishing the analytical curve, and as an initial and periodic check for contamination throughout the analytical run. The method blank ID is created through the Element LIMS and is linked to the Batch ID. For example, BG52701-BLK1 where B = Batch, G = Month, 5 = Year, 27 = Date, 01 = Batch Number.

7.3.1 The **calibration blank** (ICB1, CCB) is prepared using ICP solution. (See 7.1.6).

7.3.2 The **method blank** must contain all the reagents and in the same volumes as used in the processing of the samples. The method blank must be carried through the complete procedure and contain the same acid concentration in the final solution as the sample solution used for analysis.

7.4 **Internal standard** is added to all standards and samples automatically, by the instrument. A 5 ppm yttrium standard is used for the 4300DV . It is prepared by adding 5 ml of a 1000 ppm standard (purchased from Perkin Elmer – Cat# PE#N9300167) to a 1000 ml volumetric flask and diluting to the mark with ICP solution. Expiration of 5 ppm Yttrium standard is determined by the manufacturer and is recorded on the container label. The element intensity is used by the instrument as an internal standard to ratio the analyte intensity signals for both calibration and quantitation. Recovery criteria is 70-130%; if not met, sample is rerun.

7.5 The **Manganese X, Y optimization standard** (1.0 ppm) is used to fine tune the X, Y adjustment of the torch. Prepared by adding 0.25 ml of 1000 ppm Manganese Standard (SCP Science Cat# 140-051-251) to a 250 ml volumetric flask and diluting to the mark with ICP solution. Expiration of 1 ppm Manganese standard is determined by the manufacturer and is recorded on the container label.

8 PROCEDURE

MASTER

ESS Laboratory. This document may be reproduced solely for internal use.

8.1 Preliminary treatment of most matrices is necessary because of the complexity and variability of sample matrices. Water samples that have been pre-filtered and acidified do not need acid digestion as long as the samples and standards are matrix matched and the dissolved solids are < 0.2% w/v. Solubilization and digestion procedures are presented in Sample Preparation Method SOP 30_3005A and 30_3050B. ***NOTE: It is ESS Laboratory's policy to digest all dissolved samples.***

8.2 Set up the instrument with proper operating parameters. The instrument must be allowed to become thermally stable before beginning (usually requiring at least 15 minutes of operation prior to calibration).

8.2.1 Operating Conditions: The analyst should follow the instructions provided by the instrument manufacturer. For operation with organic solvents, use of the auxiliary argon inlet is recommended, as is solvent-resistant tubing, increased plasma (coolant) argon flow, decreased nebulizer flow, and increased RF power to obtain stable operation and precise measurements. Sensitivity, instrumental detection limit, precision, linear dynamic range, and interference effects must be established for each analyte line on that particular instrument. All measurements must be within the instrument linear range where spectral interference correction factors are valid. The analyst must (1) verify that the instrument configuration and operating conditions satisfy the analytical requirements and (2) maintain quality control data confirming instrument performance and analytical results.

8.3 Optimize and calibrate the instrument according to the instrument manufacturer's recommended procedures, using the typical mixed calibration standard solutions described in Step 7.2.2 and the manganese optimization standard described in Step 7.5.

8.3.1 Double click **Winlab 32** Icon. Wait for the status check to be completed for the instruments and accessories.

8.3.2 Select Method.

8.3.3 Click on **Plasma** Icon on tool bar. Turn the virtual switch to the **on** position or press **F9** to automatically ignite the plasma.

8.3.4 After the plasma has ignited, allow the instrument to stabilize for 30 minutes before calibration.

MASTER

8.3.5 Place centrifuge tube containing 1.0 ppm Mn solution on the auto-sampler tray. Press F10 and select appropriate location or click on **Analysis** column above the tool bar. Choose **auto-sampler Go To location** and enter the appropriate auto-sampler location to move the arm to the Mn solution. Click on **tools** and choose **spectrometer control**. Click on **AlignView**. The optimization should be reported in the Mn Profile Logbook (See Attachment A).

ESS Laboratory. This document may be reproduced solely for internal use.

8.3.6 Flush the system with the calibration blank (Step 7.3.1) between each standard or as the manufacturer recommends. Press F10 and select **Wash**. (Use the average intensity of multiple exposures for both standardization and sample analysis to reduce random error.) The calibration curve should consist of a blank and a minimum of three standards.

8.3.6.1 Click on **File**. Choose **New, Sample Info File**. Enter batch ID number, which is the date, followed by x for the 3100 instrument only, and then a through z depending on the file number for the day. (i.e. 092798xa – date, 3100 instrument, first file.)

8.3.6.2 Click on **ESS setup of 4300DV** Icon. The starting location is always 9 (1-8 reserved for standard and QC). For **sample number range**, adjust the end indicator to equal the number of samples being analyzed. Enter the sample IDs in the **Sample ID** column.

8.3.6.3 For duplicates and spikes, click on the **Matrix Check Samples** box to the right of the duplicate or matrix spike ID.

8.3.6.3.1 For duplicates, select option **Duplicate** and make sure that the reference sample number corresponds to the original sample. Click **OK**.

8.3.6.4 There are currently two methods being used on the ICP, **EVERYTHINGX** and **EVERYTHING-DV**. For both methods, click on **Analyze QC's before**. In the cell at the top of the column, enter 1, 4,6-9,2,3,5,6 or select 00Daily Cal from open Sample Info File to calibrate before running samples.

8.3.6.5 For both methods, arrow down 10 cells and enter **after 5,6**. Repeat this for every ten cells. This will ensure that the CCV and CCB will run every 10 samples.

8.3.6.6 At the end of the run, enter **5,6,2,3**. This will finish off all QC that is required to run at the end of an analysis. These QC numbers are all defined in the method. QC will run before the wash step.

8.3.6.7 Click on **File, Save As, and Sample Info File**; enter same file # as batch ID.

8.3.6.8 Click on **AUTO** Icon. On the setup screen, click on **Method** Cell to choose the appropriate method.

8.3.6.8.1 Make certain that the **SIF ID** is correct in the SIF cell.

MASTER

ESS Laboratory. This document may be reproduced solely for internal use.

8.3.6.8.2 Open **Results Data Set Name** under Q:\Metals\Results ICP#\Results and assign the appropriate ID to the data set. The ID is the Batch ID with 'ad' added to the end.

8.3.6.8.3 Make sure that the **Save Data** and **Print Log** option boxes are selected.

8.3.6.8.4 Click on **Analyze tab**. Click on **Print List** at bottom of analyze window and print this out. Click **Analyze All** to start the run.

8.4 Before beginning the sample run, reanalyze the mixed calibration standard 3 as if it were a sample. Concentration values obtained should not deviate from the actual values by more than 10% for 6010B or 5% for 200.7. If they do, follow the recommendations of the instrument manufacturer to correct for this condition and then recalibrate.

8.5 Analyze the instrument check standard (see 7.2.2.6) and the calibration blank (see 7.3.1). Analyze CRL – 1, 2, 3 and Standard 2 (low level quantitation standard), then the IFB and IFA solutions (see 7.2.2.7.1 and 7.2.2.5.2) immediately before the first sample analysis. Re-analyze the continuing calibration standard (Cal 3, see 7.2.2.3) after every ten samples and at the end of the run.

8.6 Below is a typical analytical sequence for a batch of twenty samples:

- Standard Blank (S0)
- Calibration Standard(s)
- Re-analyzed Calibration Standard 3; Recovery ± 10% (± 5% for 200.7)
- Instrument Check Standard (SCV1); Recovery ± 10%
- Calibration Blank (ICB) <MDL
- CRL1 ±30%
- CRL2 ±30%
- CRL3 ±30%
- Standard 2 ±30%
- Interference Check Sample (IFA) ± MRL
- Interference Check Sample (IFB) Recovery ± 20%
- Method blank- BLK
- Blank spike- BS
- Blank spike duplicate- BSD
- Sample 1
- Matrix duplicate
- Matrix spike
- Serial dilution
- Post digestion spike
- Samples 2-3
- CCV
- CCB
- Samples 4-11

MASTER

ESS Laboratory. This document may be reproduced solely for internal use.

- Matrix duplicate
- Matrix spike
- CCV
- CCB
- Serial dilution
- Post digestion spike
- Samples 12-19
- CCV
- CCB
- CRL1 ±30%
- CRL2 ±30%
- CRL3 ±30%
- Standard 2 ±30%
- Sample 20
- CCV
- CCB
- Interference Check Sample (IFA) ± MRL (Conn. RCP only)
- Interference Check Sample (IFB) Recovery ± 20% (Conn. RCP only)

8.7 All sample information is recorded in the run logbook (see Attachment B) and typed into the sample info file (SIF) on the ICP. The run log is used to load the auto-sampler tray. The sample information printout is compared to the run log for accuracy. A second level review is required to ensure that all samples ae labeled correctly and put into the correct positions on the autosampler. The second level analyst must initial under the date on the sequence logbook file; if analyst is absent at the start of the run then the analyst removing tubes can do the second level check at the end of the run.

9 CALCULATIONS - Note: The instrument printout is in mg/L.

9.1 All results should be reported with up to three significant figures.

9.2 The following calculation for **aqueous samples** will provide results in mg/L:

$$\text{Final conc.} = \frac{\text{mg/l (raw)} \times \text{dilution factor} \times \text{final volume}}{\text{Initial volume}}$$

9.3 The following calculation for **solid/soil samples** will provide results in mg/kg dry weight:

$$\text{Final conc.} = \frac{\text{mg/l (raw)} \times \text{dilution factor} \times \text{final volume (ml)}}{\text{Initial weight (g)} \times (\%\text{solids}/100)}$$

9.4 When reporting results, include date analyzed and initials of analyst on summary sheets and actual runs.

MASTER

ESS Laboratory. This document may be reproduced solely for internal use.

9.5 Hardness. The preferred method for determining hardness is to compute it from the results of separate determinations of calcium and magnesium (SM 2340B):

Hardness, mg equivalent $CaCO_3$ /L = 2.497 [Ca, mg/L] + 4.118 [Mg, mg/L]

9.6 The following calculation for **wipe samples** will provide results in µg/Sample:

Final conc. = mg/l (raw) x dilution factor x final volume (ml)

9.7 Lead calculation for Paint Chips

$$\text{Percent Lead} = E\ \frac{\text{mg/l (Pb)} \times D \times \text{V (ml)} \times 100\%}{\text{M (g)}}$$

Where: E = Concentration of lead in extract
D = Dilution factor
V = Volume of extract (usually 50 ml)
M = Mass of paint chips

10 QUALITY ASSURANCE/QUALITY CONTROL

10.1 All quality control data should be maintained and available for easy reference or inspection. A summary of general method quality objectives may be found in Table 4.

10.2 The upper limit of the Linear Dynamic Range (LDR) must be established for each wavelength utilized. It must be determined from a linear calibration prepared in the normal manner using the established analytical operating procedure for the instrument. The Linear Dynamic Range should be determined by analyzing a minimum of three consecutively higher standard concentrations of the analyte until the observed analyte concentration is no more than ± 10% outside the stated concentration of the standard. Determined LDRs must be documented and kept on file. The analysis from the resulting data establishes the LDR, which may be used for the analysis of samples. Determined sample analyte concentrations that are greater than 90% of the determined upper LDR limit must be diluted and reanalyzed. The LDR should be verified annually or whenever, in the judgment of the analyst, a change in analytical performance caused by either a change in instrument hardware or operating conditions would dictate they be re-determined. Record is filed in Directory Q:\Quality\QA\LDR.

10.3 Instrument detection limits (IDL) are calculated by running the calibration blank seven consecutive times. Calculate the standard deviation and multiply by 3 (or 3.14) to determine the IDL. IDL shall be ≤LOD. The IDL must be determined after initial set-up and after any significant change. Record is filed in Directory Q:\Quality\QA\IDL.

10.4 Calibration for the ICP consists of a blank and a minimum of three standards. The correlation coefficient (R) for each element calibration curve must be ≥ 0.995 (≥ 0.998 for 6010C and MCP).

ESS Laboratory. This document may be reproduced solely for internal use.
MASTER

10.5 Initial and Periodic Method QC Demonstrations: The procedures specified in Section 10.3.1 through 10.3.2 must be conducted as an initial demonstration of laboratory capability, prior to the analysis of any samples. Subsequent to this initial demonstration, additional evaluations of this nature should be conducted on a periodic basis, in response to changes in instrumentation or operations, and/or in response to confirmed or suspected systems, method, or operational problems.

10.5.1 Accuracy and Precision: To demonstrate initial laboratory capability, analyze a minimum of four initial calibration verification standards. The mean concentration must be within ± 10 % of the stated values. (± 5% for 200.7)

10.5.2 Method Detection Limits (MDL) for Individual Analytes: MDLs must be determined for each analyte/matrix/instrument combination at initial set-up and thereafter annually. See SOP 110_0013 for specific instruction on MDL determination.

10.6 Dilute and reanalyze samples that are more concentrated than the linear range study or use an alternate, less sensitive line for which quality control data is already established.

10.7 It is recommended that whenever a new or unusual sample matrix is encountered, or per preparatory batch at a minimum, a series of tests is performed prior to reporting concentration data for analyte elements. These tests, as outlined in Steps 10.7.1 and 10.7.2 will ensure the analyst that neither positive nor negative interferences are operating on any of the analyte elements to distort the accuracy of the reported values.

10.7.1 Serial dilution **(conditionally required by MCP – see Attachment D)**: If the analyte concentration is sufficiently high (50x the instrumental detection limit after dilution), an analysis of a 1+4 (5x) dilution should agree within ± 10% of the original determination. If not, a chemical or physical interference effect should be suspected.

10.7.1.1 Prepare the serial dilution by diluting the sample with ICP solution. If the sample was diluted to bring the result within the linear dynamic range, then the serial dilution must be performed on that dilution (Ex. Sample result based on 5x dilution, then serial dilution must be 25x for the applicable metals.)

10.7.2 Post digestion spike addition **(not required by MCP)**: An analyte spike added to a portion of a prepared sample, or its dilution, should be recovered to within 85% to 115% (75-125% for method 6010B) of the known value. The spike addition should produce a minimum level of 20 times and a maximum of 100 times the instrumental detection limit. If the spike is not recovered within the specified limits, a matrix effect should be suspected.

MASTER

ESS Laboratory. This document may be reproduced solely for internal use.

10.7.2.1 Measure out 5 ml of prepared sample into a centrifuge tube. Add 0.05 ml of mixed standard 1 (see 7.2.1), then bring to 10 ml with sample. Mix and set up to run after the serial dilution. The post digestion spike is performed on that dilution that the sample result was obtained.

10.8 Check the instrument standardization by analyzing check standards as follows:

10.8.1 Verify calibration initially after calibration (200.7), every 10 samples and at the end of the analytical run, using a calibration blank (Step 7.3.1) and a continuing calibration check standard (Section 7.2.2.3).

10.8.1.1 The results of the check standard (see 7.2.2.3) should agree within 10% of the expected value (±5% initially for 200.7).

10.8.1.2 . See section 11.0 for corrective action for out of criteria results.

10.8.1.3 Method 6010C requires that a low level ICV and low level CCV be run, meeting an accuracy criteria of 30%.

10.8.1.4 The results of the calibration blank should be no greater than the MRL. See section 11.0 for corrective action for out of criteria results.

10.8.2 Verify the interelement and background correction factors at the beginning and end of each analytical run (***the end interelement check is only required for Conn. RCP***). Do this by analyzing the interference check solution (Step 7.2.2.5). Results should be within ±20% for analytes found in the IFB and ± MRL for analytes not found in the IFA (verified trace impurity from one of the spiked analytes). If outside of limits, stop analysis and recheck background corrector points and/or interelement correction factors. Re-analysis interelement check solutions. Samples may not be analyzed without a valid interference check.

10.8.3 Replicate samples are to be analyzed at a frequency of 10% or per analytical batch, whichever is more frequent.

10.8.3.1 The relative percent difference between replicate determinations is to be calculated as follows:

$$RPD = \frac{D_1 - D_2 \times 100}{(D_1 + D_2)/2}$$

MASTER

ESS Laboratory. This document may be reproduced solely for internal use.

Where:

RPD = relative percent difference
D_1 = first sample value
D_2 = second sample value (replicate)

10.8.3.2 A control limit of ±20% RPD shall be used for aqueous samples that are ≥5x the MRL and ±MRL for when <5x MRL. A control limit of ±35% RPD shall be used for soil/sediment samples that are ≥5x the MRL and ±2xMRL for when <5x MRL. ***Refer to Attachment E for 6010C/MCP requirements.*** See section 11.0 for corrective action for out of criteria results.

10.8.4 Spiked samples are to be analyzed at a frequency of 10% or per analytical batch, whichever is more frequent.

10.8.4.1 The spiked sample recovery is calculated as follows:

$$\% \text{ Recovery} = \frac{SSR-SR}{SA} \times 100$$

Where:

SSR = Spiked Sample Result
SR = Sample Result
SA = Spike Added to Sample

10.8.4.2 A control limit of 25% shall be used for all sample matrices. See section 11.0 for corrective action for out of criteria results.

10.9 Employ a minimum of one method blank per sample batch to determine if contamination is occurring during sample preparation. The method blank must contain all the reagents and in the same volumes as used in the processing of the samples. It must be carried through the complete procedure as the sample solution used for analysis.

10.9.1.1 The value for the method blank should be less than the MRL See section 11.0 for corrective action for out of criteria results.

10.10 At least one BS/BSD must be analyzed for each batch of samples. These should be prepared and analyzed in the same manner as the samples (see SOP 30_3005 and 30_3050B.

MASTER

ESS Laboratory. This document may be reproduced solely for internal use.

10.10.1 The BS/BSD recovery range must be within the range of 80-120% (85-115% for 200.7).The RPD must be ≤20% for aqueous and ≤ 30% for soils,

10.10.2 If the BS or BSD falls outside of this range, see section 11.0 for corrective action for out of criteria results.

10.11 Method Reporting Limit Standards (CRLs) are run at the beginning of every analytical run. Results should agree to ± 30% at the LOQ. If not, review blank data for contamination.

10.12 BS/BSDs are plotted in Element to determine if in-house limits are within default limits.

11 DATA VALIDATION

11.1 Data validation will be accomplished by reviewing all of the quality control parameters and assuring that they are within recommended ranges and recording any deviations in the ICP Tray Sequence Logbooks (Attachments B-1 and B-2). The only exceptions made to ranges would be the following:

11.1.1 For duplicates, ±20% RPD shall be used for aqueous samples that are ≥5x the MRL and ±MRL for when <5x MRL. A control limit of ±35% RPD shall be used for soil/sediment samples that are ≥5x the MRL and ±2xMRL for when <5x MRL. However, there are cases where duplicates may not work. If this is the case, inform client in narrative concerning sample non-homogeneity.

11.1.2 For matrix spikes, the % Recovery should be ±25%. If the matrix spike is >30%, check the LCS. If the LCS is within limits, matrix interferences are present and must be noted in the narrative. If the matrix spike is <30% and non-detected results were found re-digest sample and MS to confirm matrix interference.

11.1.3 PDS and Serial dilution (section 10.7) are used to test the presence of matrix affect when the matrix spike or duplicate is outside criteria. When the PDS or SD is used, their failure is to be reported in the projective narrative as a confirmation of matrix affect.

11.1.4 For the BS/BSD, the % Recovery must be within 80-120% (85-115% for 200.7).

MASTER

ESS Laboratory. This document may be reproduced solely for internal use.

11.1.5 If the BS or BSD is outside criterion, then re-prep and re-analyze samples with the following exception: ***For high BS/BSDs, those samples that are non-detects may be reported.***

11.1.6 Analytical batches with Method blanks above the MRL will be re-prepped and re-analyzed with the following exceptions:

11.1.6.1 Samples that are that are at least twenty times higher than the method blank may be reported.

11.1.6.2 When the method blank is less than 5% of the regulatory limit associated with the analyte the method blank would be acceptable.

11.1.6.3 If the analyte is found in the method blank above the MRL but is not in any of the associated samples, no corrective action is needed.

11.1.6.4 Any results that are reported with method blank contamination must be B-flagged.

11.1.7 All unusual observations and method deviations will be noted in the narrative accompanying the data report presented to the client.

11.2 All unusual observations and method deviations will be noted in the Comments section of the Tray Sequence Logbook (Attachment B) and will be included in the project narrative accompanying the data report presented to the client.

12 REFERENCES

12.1 SW846 Method 6010C, Inductively Coupled Plasma – Atomic Emission Spectrometry; third edition, Update III and SW846 On-line, respectively.

12.2 ICP Winlab Software Guide, Perkin Elmer. Part No. 0993-8966.

12.3 Determination of Metals and Trace Elements in Water and Wastes by Inductively Coupled Plasma- Atomic Emission Spectrometry, Method 200.7, EPA/600/R-04/111 May 1994.

12.4 Environmental Express procedure for Lead Analysis with the Ghost Wipe, per HUD Guidelines for Lead in Dust Wipes, Appendix A-5.0 and NIOSH Standard 7082.

12.5 TNI Standard: Volume 1, Module 2 and Volume 1, Module 4.

12.6 Deleted.

MASTER

12.7 MCP WSC-CAM Section IIIA.

13.0 POLLUTION PREVENTION and WASTE MANAGEMENT

13.1 ESS Laboratory's policies on pollution prevention and waste management are covered in SOP 90_0002, Hazardous Waste Contingency and Emergency Response Plan. All employees are trained in the requirements of the SOP.

14.0 METHOD PERFORMANCE

14.1 Precision and Accuracy data must be generated by all employees before performing this analysis on client samples. The data is generated by analyzing a method blank and four blank spike samples. Acceptance criteria are 85-115% Recovery and %RSD of ≤ 20%.

14.2 The precision and accuracy data in Table 1 are typical for aqueous metals analysis.

15.0 TABLES, DIAGRAMS, ATTACHMENTS, AND VALIDATION DATA

Table 1. Typical Precision and Accuracy data generated 5/18/2017

Compound Name	Spk	Avg	%Rec	%RSD	Compound Name	Spk	Avg	%Rec	%RSD
Silver	0.25	0.245	98	2	Manganese	0.5	0.5	100	2
Aluminum	2.5	2.42	97	1	Molybdenum	0.5	0.495	97	1
Arsenic	0.5	0.47	94	2	Sodium	25	25.3	101	1
Boron	0.5	0.48	96	2	Nickel	0.5	0.49	98	1
Barium	0.5	0.48	97	2	Lead	0.5	0.495	97	1
Beryllium	0.05	0.048	94	2	Antimony	0.5	0.48	96	0
Calcium	5	4.9	98	2	Selenium	1	0.99	99	1
Cadmium	0.25	0.2258	91	2	Tin	0.5	0.5	100	2
Cobalt	0.5	0.49	98	1	Strontinum	0.05	0.047	94	0
Chromium	0.5	0.49	98	2	Titanium	0.5	0.49	98	2
Copper	0.5	0.49	99	1	Thallium	0.5	0.495	99	1
Iron	2.5	2.44	97	1	Vanadium	0.5	0.49	98	2
Potassium	25	24.4	97	1	Zinc	0.5	0.48	97	1
Magnesium	5	4.81	96	1					

Attachments:

MASTER

ESS Laboratory. This document may be reproduced solely for internal use.

Table 2 DELETED

Table 3 Instrument Wavelengths and Limits

Table 4 General Method Quality Objectives

Attachment 1 Method of Standard Additions

Attachments A-1 and A-2 DELETED

Attachment B-1 DELETED

Attachment B-2 ICP III Tray Sequence Logbook

Attachment C DELETED

Attachment D DELETED

Attachment E MCP WSC-CAM Section IIIA Method Quality Objectives.

Attachment F Acid-soluble Aluminum

16.0 DEFINITIONS

16.1 **Calibration Blank (CB)** -- A volume of reagent water fortified with the same matrix as the calibration standards, but without the analytes.

16.2 **Calibration Standard (CAL)** -- A solution prepared from the primary dilution standard solution or stock standard solutions. The CAL solutions are used to calibrate the instrument response with respect to analyte concentration.

16.3 **Blank spike (BS, LCS)** -- An aliquot of reagent water or other blank matrices to which known quantities of the method analytes are added in the laboratory. The BS is analyzed exactly like a sample, and its purpose is to determine whether the methodology is in control, and whether the laboratory is capable of making accurate and precise measurements. When it is necessary to test for lead, per HUD specifications, the LCS is prepared by spiking a Ghost Wipe (ASTM E 1792, current lot) with an appropriate amount of ICV solution.

16.4 **Matrix spike (MS)** -- An aliquot of an environmental sample to which known quantities of the method analytes are added in the laboratory. The MS is analyzed exactly like a sample, and its purpose is to determine whether the sample matrix contributes bias to the analytical results. The background concentrations of the analytes in the sample matrix must be determined in a separate aliquot and the measured values in the MS corrected for background concentrations.

ESS Laboratory. This document may be reproduced solely for internal use.
MASTER

16.5 **Matrix spike duplicate (MSD)** -- An aliquot of an environmental sample to which known quantities of the method analytes are added in the laboratory. The MSD is analyzed exactly like a sample, and its purpose is to determine the precision of the analytical results. The background concentrations of the analytes in the sample matrix must be determined in a separate aliquot and the measured values in the MSD corrected for background concentrations.

16.6 **Method Blank (MB)** -- An aliquot of reagent water or other blank matrices that are treated exactly as a sample including exposure to all glassware, equipment, and reagents that are used with other samples. The MB is used to determine if method analytes or other interferences are present in the laboratory environment, the reagents, or the apparatus.

16.7 **Method Detection Limit (MDL)** -- The minimum concentration of an analyte that can be identified, measured and reported with 99% confidence that the analyte concentration is greater than zero.

16.8 **Quality Control Sample (QCS)** -- A solution of method analytes of known concentrations that is used to fortify an aliquot of BS or sample matrix. The QCS is obtained from a source external to the laboratory and different from the source of calibration standards. It is used to check laboratory performance with externally prepared test materials.

16.9 **Stock Standard Solution (SSS)** -- A concentrated solution containing one or more method analytes prepared in the laboratory using assayed reference materials or purchased from a reputable commercial source.

17.0 PERSONNEL QUALIFICATIONS

17.1 Analysts who perform this analysis must have a working knowledge or quantitative and qualitative analysis, instrumental methods of analysis, chemical laboratory methods, and equipment.

17.2 All analysts, before performing any analysis, participate in the ESS Laboratory training program (SOP 80_0016). The training process consists of reading the Standard Operating Procedure, gaining instruction on the procedure from an experienced analyst, and performing the initial demonstration of capability.

18.0 TROUBLESHOOTING/MAINTENANCE

18.1 **Instrument Maintenance**:

18.1.1 **Daily:**

- Inspect water level in re-circulating water chiller and inspect for leaks.
- Inspect peristaltic pump tubing, replace if worn

MASTER

ESS Laboratory. This document may be reproduced solely for internal use.

- Inspect RF coil for excess condensation, wipe down to avoid arcing. Also, the coil should be cool to the touch, which indicates that cooling water is circulating through system.
- Inspect purge window and clean as needed.

18.1.2 **Monthly**

- Check ventilation filters clean as needed.

18.1.3 **Bi-annually**

- Replace chiller water.
- Vacuum ICP air vents

18.2 Record all maintenance in the instrument's maintenance logbook.

18.3 Extraordinary problems may require assistance from Perkin-Elmer Corporation. ESS Laboratory maintains a service contract with this vendor.

19.0 Data Management And Records

19.1 **Data Management** - ESS Laboratory's utilizes the Promium Element LIMS system as part of its Data Management system. Client sample information is entered into ELEMENT LIMS and analyses are assigned to each sample. The LIMS allows EPA hold times, minimum batch QC requirements, and QC criteria to be assigned to each analysis. Standards can be entered and assigned to QC samples through the LIMS. Once analysis has been performed, data is imported using DataTool avoiding manual errors. In conjunction with Crystal Reports, the ELEMENT system allows for a wide variety of reporting formats.

19.2 **Records** – The specific retention periods required in the NELAC Standards, EPA-CFR and state and local statutes are followed or exceeded. At a minimum, data records are retained for five years from last use (10 years for drinking water). If there is a question about whether a record should be retained or disposed because no specific requirement could be found, the record is retained until such time as a retention period is specified. Records are stored in specified-labeled locations and are easily retrievable. All raw data associated with testing is also retained including; computer printouts, chromatograms, review forms, and logbooks.

MASTER

ESS Laboratory. This document may be reproduced solely for internal use.

TABLE 3

INSTRUMENT WAVELENGTHS AND LIMITS

Detection Element	Wavelength(nm)
Aluminum	237.313
Antimony	206.836
Arsenic	188.979
Barium	233.527
Beryllium	313.107
Boron	182.528
Cadmium	228.802
Calcium	315.886
Chromium	267.716
Cobalt	228.616
Copper	324.752
Iron	238.204
Iron	302.107
Lead	220.353
Magnesium	279.077
Manganese	257.610
Molybdenum	202.031
Nickel	231.604
Potassium	766.491
Selenium	196.026
Silver	328.068
Sodium	330.237
Thallium	190.801
Tin	189.927
Titanium	337.279
Vanadium	292.402
Zinc	213.857

The wavelengths listed are utilized because of their sensitivity and overall acceptance. Other wavelengths may be substituted if they can provide the needed sensitivity and are treated with the same corrective techniques for spectral interference (see step 5.1).

MASTER

ESS Laboratory. This document may be reproduced solely for internal use.

Table 4
Summary of Method Quality Objectives for Method 200.7/6010B
Metals by Inductively Coupled Plasma

QC Element	Frequency	Criteria	Corrective Action
Initial Calibration	Daily following optimization of ICP and prior sample analysis.	• Minimum of blank and three standards. • Low standard at MRL • R ≥0.995 (Do not force through zero for LDR)	• No allowance. Perform maintenance and recalibrate.
ICV	Immediately following daily initial calibration.	• %Rec = 90-110%, %RPD < 5%. • Use separate source from initial calibration standards.	• If criteria exceeded, remake and re-analyze ICV. If second consecutive ICV is within criteria then calibration is accepted, otherwise recalibrate.
Low Level Calibration Standard (CRI)	Daily after initial calibration to support MRL.	• Only used if low standard is not at the MRL. • %Recovery 70-130%. • MRL is at level of last successfully passed CRL.	• If no CRL passes, MRL at concentration in lowest calibration standard.
CCV	After calibration, every 10 samples and at end of analytical run.	• Concentration level near midpoint of curve • Same source as calibration standard. • %Rec = 90-110%, %RPD ≤5% (200.7 first CCV 95-105%)	• If criteria are exceeded, then remake and re-analyze CCV. If second consecutive CCV is within criteria, then calibration is verified, otherwise re-calibrate system and re-analyze any sample since the last valid CCV.
Continuing Calibration Blank	After calibration, every 10 samples and at end of analytical run.	• Must be matrix-matched (same acid concentration as standards and QC samples.) • Analytes < MRL	• Re-calibrate and re-analyze all samples since last valid CCB.
Method Blank	One per analytical batch of 20 or fewer samples.	• Matrix specific • Analytes < MRL	• Report exceedance in the project narrative. • Samples that are non-detect may be reported. • Samples with concentrations that are 20x higher than the method blank may be reported. • Samples reported with a contaminated blank must be "B" flagged.
Blank spike (BS)	One per analytical batch of 20 or fewer samples.	• Use standard source different than used for initial calibration and Matrix specific • Concentration level should be between low and mid-level standard • Percent recoveries 80-120%. (85-115% for 200.7)	• Report exceedance in the project narrative. • If LCS is biased high and sample is non-detect, then may report sample result. • Re-digest and re-analyze if the above exceptions do not apply.

ESS Laboratory. This document may be reproduced solely for internal use.

MASTER

Blank spike duplicate (BSD)	One per analytical batch of 20 or fewer samples.	• Prepared as above • Percent recoveries same as above • %RPD ≤ 20% aqueous and ≤ 30% soil.	• Report exceedance in the project narrative. • If LCS is biased high and sample is non-detect, then may report sample result. • Re-digest and re-analyze if the above exceptions do not apply.
Matrix Spike	One per analytical batch of 10 or fewer samples	• Prepared using the same source as the blank spike • Concentration level should be between low and mid-level standard • Percent recoveries between 75-125%.	• Report exceedance in the project narrative. • Laboratories are expected to develop in-house control limits per each media. Control limits should fall within default limits.
Matrix duplicate	One per analytical batch of 10 or fewer samples	• **Aqueous**: Relative percent difference is ±20% for samples > 5x MRL and ±MRL for samples <5x the MRL. • **Soil**: Relative percent difference is ±35% for samples > 5x MRL and ±2xMRL for samples <5x the MRL.	• Note exceedance in project narrative. • If MS %Recovery is >30% and LCS is in control, no corrective action is required. If %Recovery is <30% and non-detect results found perform PDS.
rial Dilution	One per analytical batch of 10 or fewer samples, performed on Dup/Spk sample.	• Result of 5x dilution must be ±10% of undiluted sample when result is ≥25x MRL.	• Narrate serial dilution QC out of control. May be indication of matrix affect.
Post Digestion Spike (PDS)	One per analytical batch of 10 or fewer samples, performed on Dup/Spk sample.	• Perform PDS if Serial dilution is not in control or if sample is < 25x the MRL. • Percent recovery must be 85-115% (75-125% for 6010B).	• Narrate PDS out of control if MS is also out of control. May be indication of matrix affect.
Linear Dynamic Range	Semi-annually	• Use successively higher concentrated standards against calibration curve until a standard is reached that is >10% difference from true value. Upper LDR is 90% of the highest standard within criteria.	• N/A
Instrument Detection Limit	Quarterly	• Analyze ten replicates of the calibration blank.	• N/A

v

MASTER

ESS Laboratory. This document may be reproduced solely for internal use.

ATTACHMENT I

SOP Modification

Method of Standard Additions

SOP(s) Modified: Inductively Coupled Plasma-Atomic Emission Spectroscopy (SW 846 Method 6010B/ EPA Method 200.7

Modification Objective: This addendum defines when the method of standard additions must be performed and how to perform the procedure.

Method Summary: The standard addition technique involves adding known amounts of standard to one or more aliquots of the processed sample solution. This technique compensates for a sample constituent that enhances or depresses the analyte signal, thus producing a different slope from that of the calibration standards. It will not correct for additive interferences which cause a baseline shift.

For DoD/Navy projects, the method of standard additions (MSA) shall be used when the matrix spike or matrix spike duplicate is outside control limits and the failure is confirmed by the serial dilution/post digestion spike test. MSA calculation will only be applied to the metal(s) that failed.

MSA Procedure: The simplest version of this technique is the single-addition method, in which two identical aliquots of the sample solution, each of volume V_x, are taken. To the first (labeled A) is added a known volume V_S of a standard analyte solution of concentration C_S. To the second aliquot (labeled B) is added the same volume Vx of the solvent. The analytical signals of A and B are measured and corrected for non-analyte signals (performed by the ICP). The unknown sample concentration C_X is calculated:

$$C_X = \frac{S_B \times V_S \times C_S}{(S_A - S_B) \times V_x}$$

Where S_A and S_B are the analytical signals of solutions A and B, respectively. V_S and C_S should be chosen so that S_A is roughly twice S_B on the average, avoiding excess dilution of the sample.

Since ESS Laboratory performs a post digestion spike (PDS) on each sample it has chosen for the matrix spike the results from the spiked and unspiked aliquots will be used in the MSA calculation.

Example: MS result for Titanum was 56.8% and the PDS was at 69%. MSA calculated as follows:

$V_x = 10$ ml $V_S = 0.05$ ml $C_S = 100$ mg/L

Signal S_A (spiked aliquot) = 109644
Signal S_B (unspiked aliquot) = 19801

$$Cx = \frac{(19801 \times 0.05 \text{ ml} \times 100 \text{ mg/L})}{(109644 - 19801) \times 10 \text{ ml}} = 0.11 \text{ mg/L}$$

MASTER

MASTER

ATTACHMENT B-2

ESS LABORATORY
ICP III TRAY SEQUENCE LOGBOOK

#	SAMPLE	#	SAMPLE	#	SAMPLE	#	SAMPLE
1	STD 1:	31		61		91	
2	STD 2:	32		62		92	
3	STD 3:	33		63		93	
4	STD 4:	34		64		94	
5	SCV1:	35		65		95	
6	CRL 1:	36		66		96	
7	CRL 2:	37		67		97	
8	CRL 3:	38		68		98	
9		39		69		99	
10		40		70		100	
11		41		71		101	
12		42		72		102	
13		43		73		103	
14		44		74		104	
15		45		75		105	IFB:
16		46		76		106	IFA:
17		47		77			
18		48		78			
19		49		79			
20		50		80			
21		51		81			
22		52		82			
23		53		83			
24		54		84			
25		55		85			
26		56		86			
27		57		87			
28		58		88			
29		59		89			
30		60		90			

Internal Standard

ID:_____

SIF:_____

RDS:_____

_____

METHOD:_____

ANALYST:_____

DATE:_____

Comments:_____

MASTER

Table III A-1 : Specific QC Requirements and Performance Standards for Metals (SW-846 6010C) Using WSC-CAM-III A

Required QC Parameter	Data Quality Objective	Required Performance Standard	Required Deliverable?	Rejection Criteria per WSC-07-350	Required Corrective Action	Required Analytical Response Action
		(5) Percent recoveries must be between 90-110% for each target analyte.				
Initial Calibration Blank (ICB)	Laboratory Analytical Sensitivity (instrument drift & contamination)	(1) Frequency: Immediately after ICV. (2) Prepared using same concentration of acids as calibration standards. (3) Target analytes must be <RL.	No	NA	(1) Reanalyze ICB; if acceptable, no further action required. (2) If reanalysis is still outside of criteria, recalibrate and reanalyze ICV & ICB.	Suspend all analyses until ICB meets criteria.
Low-Level Calibration Verification (LLCV)	Laboratory Analytical Sensitivity (verify low-end of calibration range / verify RL)	(1) Frequency: Daily prior to sample analysis if initial calibration did not contain a low-level standard at the RL for each target analyte. If initial calibration includes the RL as the low-level standard in the initial calibration curve, then LLCV is not required. (2) Prepared using same source as initial calibration standards. (3) Concentration level must be at the level of the RL for all target analytes. (4) Percent recoveries must be 70-130% for all target analytes.	No	NA	(1) Reanalyze LLCV; if acceptable, no further action required. (2) If reanalysis is still outside of criteria and associated analytes are ≤10x RL in associated field samples, recalibrate and reanalyze LLCV and associated samples. (3) If associated analytes are >10x RL in associated field samples, include explanation in laboratory narrative; no further action required.	Suspend all analyses until LLCV meets criteria unless the concentrations of the affected target analytes are >10x RL in the associated field samples.
Interference Check Standards (ICSA and ICSAB)	Laboratory Analytical Accuracy (checks background points and interelement interference corrections on instrument)	(1) Frequency: Daily prior to sample analysis. (2) ICSA and ICSAB must contain known amounts of interfering analytes (see SW-846 6010C). (3) Percent recoveries must be 80-120% for all target analytes. (4) Non-spiked analytes in the ICSA must be <2x RL.	No	NA	(1) Reanalyze ICSA/AB; if acceptable, no further action required. (2) If ICSA/AB is still outside of criteria, adjust interference corrections, background corrections, and/or linear ranges, as needed and reanalyze ICSA/AB. (3) Recalibrate and reanalyze all samples since last compliant ICSA/AB.	Suspend all analyses until ICSA/AB meet criteria. If automatic (computerized) corrections for background and IECs are not used during analysis, the laboratory must narrate how spectral interferences were minimized and what hand-calculations, if any, were performed to correct sample results.

Table III-A-1: Specific QC Requirements and Performance Standards for Metals (SW-846 6010C) Using WSC-CAM-III A

Required QC Parameter	Data Quality Objective	Required Performance Standard	Required Deliverable?	Rejection Criteria per WSC-07-350	Required Corrective Action	Required Analytical Response Action
Continuing Calibration Verification (CCV)	Laboratory Analytical Accuracy	(1) Frequency: Every 10 samples and at the end of the analytical run. (2) Prepared using same source as initial calibration standards. (3) Concentration level near midpoint of curve. (4) Must contain all target analytes. (5) Percent recoveries must be 90-110% for each target analyte.	No	NA	(1) Reanalyze CCV; if acceptable, no further action required. (2) If reanalysis is still outside of criteria, recalibrate and reanalyze all associated samples since last compliant CCV – unless (3) applies. (3) If recovery is high (>110%) and all associated sample results are non-detected, no corrective action required.	If (3) applies, include explanation in laboratory narrative.
Continuing Calibration Blank (CCB)	Laboratory Analytical Sensitivity (instrument drift & contamination)	(1) Frequency: Every 10 samples following CCV and at the end of the analytical run. (2) Prepared using same concentration of acids as calibration standards. (3) Target analytes must be <RL.	No	NA	(1) Reanalyze CCB; if acceptable, no further action required. (2) If reanalysis is still outside of criteria, recalibrate and reanalyze all associated samples since last compliant CCB – unless (3) applies. (3) If concentration of contaminant in CCB is >RL but all associated sample results are either non-detected or >10x concentration in CCB, no corrective action required.	If (3) applies, include explanation in laboratory narrative.

WSC-CAM SECTION III A

Table III A-1. Specific QC Requirements and Performance Standards for Metals (SW-846 6010C) Using WSC-CAM-III A

Required QC Parameter	Data Quality Objective	Required Performance Standard	Required Deliverable?	Rejection Criteria per WSC-07-350	Required Corrective Action	Required Analytical Response Action
Method Blank (MB)	Laboratory Method Sensitivity (contamination evaluation)	(1) Frequency: One per digestion batch of ≤20 field samples. (2) Must be digested with the samples using the same preparation method as the samples. (3) Target analytes must be <RL.	Yes	NA	(1) Reanalyze MB; if acceptable, no further action required. (2) If reanalysis is still outside of criteria, redigest and reanalyze MB and all associated field samples in batch – unless (3) applies. (3) If concentration of contaminant in MB is >RL but all associated sample results are either non-detected or >10x concentration in MB, no corrective action required.	If (3) applies, include explanation in laboratory narrative.
Laboratory Control Sample (LCS)	Laboratory Analytical Accuracy	(1) Frequency: One per digestion batch of ≤20 field samples. (2) Must be matrix-matched by digesting with the samples using the same preparation method. CAM requires a solid Standard Reference Material (SRM) be prepared and analyzed with solid field samples as the "solid LCS." An SRM is a soil or sediment matrix that contains the analytes of interest at known concentrations and with 95% confidence limits. (3) Concentration levels for aqueous LCS near midpoint of curve. (4) Must contain all target analytes. (5) Percent recoveries for all target analytes must be 80-120% for aqueous LCS and within vendor control limits (95% confidence limits) for solid LCS.	Yes	Aqueous LCS: Recovery <50%: affected analytes in associated samples may be rejected.	(1) Reanalyze LCS; if acceptable, no further action required. (2) If reanalysis is still outside of criteria and LCSD is in-control for same analyte, no corrective action required. (3) If LCS and LCSD are both outside of criteria, redigest and reanalyze LCS/LCSD and all associated field samples in batch.	Report recovery exceedances in laboratory narrative.

DRAFT

Table III A-1: Specific QC Requirements and Performance Standards for Metals (SW-846 6010C) Using WSC-CAM-III A

Required QC Parameter	Data Quality Objective	Required Performance Standard	Required Deliverable?	Rejection Criteria per WSC-07-350	Required Corrective Action	Required Analytical Response Action
LCS Duplicate (LCSD)	Laboratory Analytical Accuracy & Precision	(1) Frequency: One per digestion batch of ≤20 field samples ONLY if not performing project-specific MD. (2) Must be matrix-matched by digesting with the samples using the same preparation method. CAM requires a solid SRM be prepared and analyzed with solid field samples as the "solid LCSD." An SRM is a soil or sediment matrix that contains the analytes of interest at known concentrations and with 95% confidence limits. (3) Concentration levels must be same as LCS. (4) Must contain all target analytes; analyze immediately following LCS. (5) Percent recoveries for all target analytes must be 80-120% for aqueous LCS and within vendor control limits (95% confidence limits) for solid LCS. (6) RPDs must be ≤20 for aqueous LCS/LCSD and ≤30 for solid LCS/LCSD.	Yes ONLY if no MD	Same as above for LCS for recovery evaluation	(1) Reanalyze LCSD; if acceptable, no further action required. (2) If reanalysis is still outside of recovery criteria and LCS is in-control for same analyte, no corrective action required. (3) If LCSD and LCS are both outside of recovery criteria, redigest and reanalyze LCS/LCSD and all associated field samples in batch.	Report recovery and RPD exceedances in laboratory narrative.
Matrix Spike (MS) Project-Specific	Method Accuracy in Sample Matrix	(1) Solid Samples (Soil/Sediment) Frequency: One per 20 field samples per matrix; designated by data user on COC or at project set-up. Aqueous Samples Frequency: One per digestion batch of ≤20 field samples per matrix strongly recommended (designated by data user on COC or at project set-up). (2) Concentration levels near midpoint of curve. (3) Must contain all target analytes. (4) Percent recoveries for all target analytes must be 75-125%.	Yes ONLY when requested by the data user	Recovery <30%: affects non-detects for affected metal in all associated samples.	(1) Reanalyze MS; if acceptable, no further action required. (2) After reanalysis, if MS recovery is 30-74% or >125% and LCS was in-control, no corrective action is required. (3) If MS recovery is <30% and associated with non-detected results, redigest (homogenize sample well) and reanalyze sample/MS pair. Report results and narrate.	Report MS exceedances in laboratory narrative. If redigested due to recoveries <30%, report both sets of sample/MS data.

Table III A-1. Specific QC Requirements and Performance Standards for Metals (SW-846 6010C) Using WSC-CAM III A

Required QC Parameter	Data Quality Objective	Required Performance Standard	Required Deliverable(s)	Rejection Criteria per WSC-07-350	Required Corrective Action	Required Analytical Response Action
Matrix Duplicate (MD) Project-Specific	Method Precision in Sample Matrix	(1) Frequency: One per digestion batch of ≤20 field samples per matrix is strongly recommended (designated by data user on COC or at project set-up). (2) Prepare by digesting and analyzing an additional aliquot of the same field sample used for MS. (3) RPD for each target analyte must be ≤20 for aqueous and ≤35 for solids.	Yes ONLY when requested by the data user	NA	Narrate.	Report exceedances in laboratory narrative.
Dilution Test	Accuracy in Sample Matrix	(1) Frequency: One per ≤20 field samples per matrix; only if project-specific MS requested and analyte concentration is >50x RL. (2) Perform 5x serial dilution on same sample used for MS/MD. (3) %D of the Sample & Dilution results for target analytes at levels >50x RL must be ±10% for all matrices.	Yes ONLY if project-specific MS requested by data user	NA	Narrate.	Report exceedances in laboratory narrative.
General Reporting Issues	NA	(1) Non-detected values must be reported with the sample-specific RL for each target analyte using all preparation/dilution factors. (2) The laboratory must only report values ≥ the sample-specific RL; optionally, values below the sample-specific RL can be reported as estimated, if requested. (see SW-846 Method 6010C, Section 10.3.3). The laboratory must report results for samples and blanks in a consistent manner. (3) Sample concentrations that exceed the LDR must be diluted and reanalyzed to fall within the linear dynamic range. (4) Results for soils/sediments must be reported on a dry-weight basis for comparison to MCP regulatory standards.	NA	NA	NA	(1) Qualification of the data is required if reporting values below the sample-specific RL. (2) The performance of dilutions must be documented in the laboratory narrative or on the report form. Unless due to elevated concentrations of target analytes, reasons for dilutions must be explained in the laboratory narrative. (3) If samples are not preserved properly or are not received with an

Acid-Soluble Aluminum:

From NPEDS Region I 2017 fact sheet: Facilities that use aluminum based coagulants are expected to have aluminum in their discharge. For facilities in New Hampshire, NPDES samples are analyzed for total recoverable Aluminum (Total Aluminum) with the conservative assumption that the entire fraction of measured total recovered aluminum is in the acid soluble form. On the other hand New Hampshire NHDES water quality regulations require aluminum be reported as acid-soluble aluminum. (NHDES to EPA letter 07/01/2014) To satisfy both EPA NPDES and NHDES both total and acid-soluble aluminum may need to be reported.

Summary of ***acid-soluble aluminum*** procedure:

1. Samples will need to be provided in HNO3 preserved plastic bottles.
2. Samples must be allowed to stand acidified between pH 1.5 and 2 with nitric acid for at least 16 hours prior to filtration.
3. The acidified sample is filtered through a 0.45 micron filter. (Filter blanks also run)
4. The filtrate is not digested.
5. The filtrate is run for Al by ICP method 200.7
6. Results reported as "acid-soluble Aluminum".

References:

Ambient Water Quality Criteria for Aluminum – 1988. USEPA 440/5-86-008 August 1988

Draft NPDES General Permit to Discharge Wastewater from Potable Water Treatment Facilities to certain waters of the Commonwealth of Massachusetts and the State of New Hampshire-2017. https://www3.epa.gov/region1/npdes/pwtf/2017-pwtfgp-fact-sheet.pdf

MASTER

ESS Laboratory
Division of Thielsch Engineering
Cranston, RI

SOP NO. 30_7471
MERCURY ANALYSIS FOR SOIL SAMPLES
(SW 846 METHODS 7471A and B)

APPROVED BY:

Operations Manager	Date 6/28/10
QA Officer	Date 6/24/10
Laboratory Director	Date 6/25/10

MERCURY ANALYSIS FOR SOIL SAMPLES (SW 846 METHODS 7471A and B)

1.0 SCOPE AND APPLICATION

1.1 This method measures the total mercury content in soil, sediments, bottom deposits, and sludge matrices. This method can determine mercury concentrations as low as 0.033 mg/kg and as high as percent levels, with the applicable dilution.

2.0 SUMMARY OF METHOD

2.1 In a 50 ml digestion tube, a 0.6 - 0.7g aliquot of soil/solid is digested in the presence of aqua regia and potassium permanganate. After digestion, sodium chloride-hydroxylamine hydrochloride, and stannous chloride are added, thereby releasing the mercury as a vapor. The mercury vapor is aerated into a closed cell positioned in the light path of an atomic absorption spectrophotometer capable of measuring radiation at 253.7 nm.

3.0 HEALTH AND SAFETY

3.1 Each employee has been trained and has acknowledged being trained in the safe use and handling of chemicals being used in the laboratory. This training has been performed according to the ESS Training SOP 80_0016 and by the Chemical Hygiene Plan, SOP No. 90_0001, in conjunction with the Safety orientation.

3.2 All sample and material handling should be done in a hood while using proper protective equipment to minimize exposure to liquid or vapor. Minimum personnel protective equipment includes the use of laboratory safety glasses, a lab coat or apron, and protective gloves.

3.3 The MSDs for the concentrated chemical used in the area are kept on file in a central location that is available for all employees to review.

3.4 Proper emergency response to spills or injury should be reviewed by the laboratory employee prior to attempting this procedure. Employees must know the location of spill kits, eyewashes, showers, and fire fighting equipment. Employees must also have knowledge of disaster evacuation routes.

4.0 SAMPLE PRESERVATION, CONTAINERS, HANDLING AND STORAGE

4.1 Prior to analysis, all samples are to be preserved by storing at 4° C.

4.2 Hold time for soil samples is 28 days from day of sampling. Samples prepared after this date are to be flagged as estimated values.

ESS Laboratory. This document may be reproduced solely for internal use.

5.0 INTERFERENCES AND POTENTIAL PROBLEMS

5.1 Potassium permanganate is added to eliminate possible interference from sulfide.

5.2 Certain volatile organic materials that absorb at this wavelength may also cause interference. A preliminary run without reagents should determine if this type of interference exists.

5.3 Samples high in chlorides require additional permanganate (as much as 5 ml). Care must be taken to ensure that free chlorine is absent before the mercury is reduced and swept into the cell.

6.0 EQUIPMENT/APPARATUS

6.1 Two Perkin Elmer **Flow Injection Mercury Systems, FIAS 100** (S/N B0509550 and 101S12110201).

6.2 Two Perkin Elmer **Autosamplers** (S/N 3353 and 102S12104325).

6.3 **Hot Block**, digester by Environmental Express

6.4 **Disposable digestion vessels**, by Environmental Express

6.5 **Disposable screw cap covers**, by Environmental Express

6.6 **0.2 micron FilterMates**, by Environmental Express

6.7 **Analytical Balance** calibrated in accordance with SOP 30_0002.

6.8 **Volumetric Flasks**: 200 ml, 250 ml, 1L

7.0 REAGENTS

7.1 **Reagents**: All reagents used must be trace-metal grade and interference free.

7.1.1 **Concentrated Hydrochloric Acid** (HCl): The method blank must be less than ½ the MRL in order to use.

7.1.1.1 **3% Hydrochloric Acid**: In a 1L volumetric flask, add 30ml of concentrated HCl to 1L DI water.

7.1.2 **Concentrated Nitric Acid** (HNO_3): The method blank must be less than ½ the MRL in order to use.

ESS Laboratory. This document may be reproduced solely for internal use.

7.1.3 **Aqua Regia**: Prepare immediately before use by mixing concentrated HCl and concentrated HNO_3 in a 3 to 1 ratio. Only make enough to prepare the samples for the day.

7.1.4 **Potassium Permanganate** ($KMnO_4$), **5% solution**: In a 1L volumetric flask, add 50g of Potassium Permanganate and dilute to 1L mark with DI water. This is a likely source of mercury contamination. The potassium permanganate used should be a "mercury free" grade.

7.1.5 **Sodium Chloride-Hydroxylamine Hydrochloride** ($NH_2OH{\cdot}HCl$) **solution**: In a 1L volumetric flask, add 120g of hydroxylamine hydrochloride and 120g of sodium chloride and dilute to 1L mark with DI water.

7.1.6 **Stannous Chloride solution**: In a 1L volumetric flask, add 11 g of Stannous Chloride, 30ml of 3% HCl and dilute to mark 1L with DI water.

7.2 **Standards**:

7.2.1 **Primary Standards**: The standards are stored at room temperature and not used beyond the manufacturer's expiration date.

Vendor	Catalog #	Concentration
Aldrich	20,729-2	1000 mg/ml
CPI	4400-1000331	1000 mg/ml

7.2.2 **Working Standard Solutions** are prepared daily:

7.2.2.1 **Hg Stock Standard** (1 ppm): In a 250 ml volumetric flask, add 100 ml of DI water, 7.5 ml of HNO_3, and 0.25 ml of the CPI standard (see 7.2.1) and dilute to the 250 ml mark. ***This solution expires in one week.***

7.2.2.2 **HgICV/BS/MS Stock Standard** (1ppm): In a 250 ml volumetric flask, add 100 ml DI water, 6.0 ml HNO_3, and 0.25 ml of the Aldrich standard (see 7.2.1) and dilute to the 250 ml mark. ***This solution expires in one week.***

7.2.2.3 **Calibration Standards** are used to calibrate the instrument. They are prepared in labeled digestion tubes using the Hg stock standard (see 7.2.2.1), initially transferring into 2 ml aqua regia diluted to 20 ml with DI water, and then proceeding to section 8, treating the standards as samples, without the heating step.

digestion tube label	volume of standard	Initial volume	final concentration[1]
0.0 ppb	0 ml	20 ml	0 ppb

ESS Laboratory. This document may be reproduced solely for internal use.

0.5 ppb	0.02 ml	20 ml	0.5 ppb
1.0 ppb	0.04 ml	20 ml	1.0 ppb
3.0 ppb	0.12 ml	20 ml	3.0 ppb
5.0 ppb	0.2 ml	20 ml	5.0 ppb
10.0 ppb	0.4 ml	20 ml	10.0 ppb

[1] Based on a final volume of 40 ml.

7.2.3 The **Instrument Check Standards** (ICV and CCV: Initial and Continuing Calibration Verification) are used to verify the instrument calibration.

7.2.3.1 **Continuing Calibration Verification** (CCV) is run immediately after the curve, after every ten samples, and at the end of the run. The CCV is prepared by adding 2 ml of aqua regia and diluting to 20 ml with DI water in a digestion tube, adding 0.12 ml of Hg stock (see 7.2.2.1), then proceeding to section 8, treating the standard as a sample without the heating step.

7.2.3.2 The **Initial Calibration Verification** (ICV) is run after the initial CCV. The ICV is prepared by adding 2 ml of aqua regia and diluting to 20 ml with DI water into a digestion tube, adding 0.12 ml of the HgICCV stock standard (see 7.2.2.2), then proceeding to section 8, treating the standard as a sample without the heating step.

7.2.3.3 Every batch of 20 samples prepped must have a **Blank Spike/Blank Spike Duplicate (BS/BSD).** In a digestion tube labeled BS, add 0.12 ml of HgICV/LCS/MS stock standard (see 7.2.2.2) to 2 ml of aqua regia and volumize to 20 ml with DI water. Prep the tube as a sample (see section 8).

7.2.3.4 Every batch of 20 samples must have a **Matrix spike (MS).** Each matrix spike is prepared by adding 0.6 g sample to a digestion tube and 0.12 ml of HgICV/ BS/MS stock standard (see 7.2.2.2). The tubes are prepped as samples. Additionally, a sample duplicate is required for DoD work.

7.3 **Three types of blanks** are required for the analysis. The **Calibration Blank (CB)** is used in establishing the analytical curve, the **Method Blank** (MB) is used to assess possible contamination resulting from the preparation step, and the **Continuing Calibration Blank** (CCB) verifies the calibration blank as well as check for instrument contamination.

MASTER

7.3.1 The calibration blank (ICCB) and continuing calibration blank are prepared like the standards with no Hg stock solution added.

7.3.2 The method blank is prepared by adding 2 ml of aqua regia to a digestion and treating exactly like the samples. The method blank must be carried

ESS Laboratory. This document may be reproduced solely for internal use.

through the complete procedure and contain the same acid concentration in the final solution as the sample solution used for analysis (see section 8).

8.0 PROCEDURE

8.1 Sample Digestion:

8.1.1 Soil samples received for metals analysis typically have the consistency of coarse dry sand. In order to obtain a representative subsample for analysis, ESS Laboratory is guided by the subsampling techniques described in Attachment G of SOP 10.0001 (Sample Receiving), which calls for homogenization by stirring. Accordingly, the sample is thoroughly mixed, either in the original container, or if it should be necessary, by transferring to a larger clean glass container, and stirring with a clean glass rod. After mixing, weigh out between 0.6 to 0.7 g of sample (to the nearest 0.01 g) into a previously labeled digestion tube. This is performed by discrete transfers from different parts of the sample container, avoiding any artifacts, such as rocks and twigs, and taking care to use all of the material transferred, in the analysis. In the event that the consistency differs from that described above, then Subsampling Attachment G, referred to above, must be consulted for further guidance. Record this weight in the logbook (Attachment A), or electronic device (HP Tablet), as described in Attachment E.

8.1.2 Add 2.0 ml of Aqua Regia (see 7.1.3). Cover the samples and put them into a Hot Block at 95° C for 5 minutes.

8.1.3 Remove from the Hot block, cool, and dilute each tube to the 20 ml mark with DI water.

8.1.4 Add 3.0 ml of potassium permanganate solution to each sample and mix. If liquid does not turn or remain purple, a dilution of the sample is required, or an increased amount of reagent should be added. Ensure that equal amounts of reagent are added to standards and blank. At the end of the 30 minute digestion the sample must remain purple.

8.1.5 Cap each tube.

8.1.6 Place in Hot Block at 95 °C for 30 minutes and record both time and temperature.

8.1.7 At the end of 30 minutes remove the samples from the Hot Block and allow samples and standards to cool to room temperature.

8.1.8 Add 1 ml of sodium chloride-hydroxylamine hydrochloride to each sample and standard to reduce the excess permanganate. At the end of this step, the solution should be clear (no pink or purple present).

ESS Laboratory. This document may be reproduced solely for internal use.

8.1.9 Volumize each sample and standard to 40 ml with DI water and mix.

8.1.10 Filter with 0.2 micron Filtermates.

8.1.11 Transfer samples from digestion tubes to autosampler tubes and record in Hg run log (Attachment B) or HP Tablet, as described in Attachment E.

8.2 **Sample Analysis**:

8.2.1 Instrument, Computer, Argon tank, and printer should be turned on.

8.2.2 Fill instrument bottles with stannous chloride solution and 3% HCl (see 7.1.1.1 and 7.1.7). Lock pump tension bars in place. Replace tubing if necessary.

8.2.3 Using Perkin Elmer WinLab software, create a sample information file from the mercury run log, and print the auto sample load list. Place samples on autosampler using the auto sample load list as a guide. (See attachment C).

8.2.4 Select the auto method Hg-5ppb S, and create a data results file where data will be saved.

8.2.5 Select print log to print run data, and if running unattended select turn off lamp at end of run.

8.2.6 Start analytical run.

9.0 CALCULATIONS

9.1 The results are given in µg/L. Final results are converted to mg/Kg dry (by dividing by 1000) and then multiplying by a final volume of 40 ml, multiplying by any dilution factor, dividing by the initial weight of sample, and dividing by the percent solid divided by 100.

$$\text{Final result (mg/Kg dry wt.)} = \frac{\text{(Raw result ug/L)*(Final volume)(Dilution factor)}}{\text{(Weight of sample in g)(Percent Solids/100)}}$$

9.2 Before data is submitted for reporting, sample ID's and units are checked for transcription errors.

10.0 QUALITY ASSURANCE/QUALITY CONTROL

10.1 All quality control data should be maintained and available for easy reference or inspection.

ESS Laboratory. This document may be reproduced solely for internal use.

10.2 Dilute and reanalyze samples that are more concentrated than the linear calibration limit.

10.3 Initial calibration curves must consist of a blank and five standards. The coefficient of determination for the standard curve must be greater than or equal to 0.995.

10.4 The CCV and CCB must be analyzed immediately after the curve, after every tenth sample, and at the end of the sample run. Refer to Tables 1 and 2 for corrective action.

10.4.1 The CCV must have a recovery range of 80-120 %.

10.4.2 The value for the CCB must not exceed ½ MRL.

10.4.3 If either the CCV or CCB are invalid, all samples are to be re-analyzed since the last valid CCV/CCB.

10.5 The ICV must be analyzed immediately following the initial CCV standard to verify the validity of the primary standard. Refer to Tables 1 and 2 for corrective action.

10.5.1 The ICV recovery range must be within the range of 90-110%.

10.5.2 If the ICV is outside of this range, a new daily calibration must be generated.

10.6 Employ a minimum of one method blank (MB) per sample batch (or 20 samples maximum) to determine if contamination is occurring. The method blank must contain all the reagents and in the same volumes as used in the processing of the samples. It must be carried through the complete procedure as the sample solution used for analysis.

10.6.1 The value for the blank should not exceed ½ the MRL. If it does, see Section 11.0 and Tables 1 and 2 for corrective action.

10.7 Analyze one matrix spike for every twenty samples or per analytical batch, whichever is more frequent. Calculate the percent recovery as follows:

$$\% \text{ Recovery} = \frac{SSR - SR}{SA} \times 100$$

Where:

SSR = Spiked Sample Result
SR = Sample Result
SA = Spike Added to Sample

10.7.1 The Recovery control limit is ±20 %. If the matrix spike is outside acceptance limits, see section 11.0 and tables for corrective action.

MASTER

ESS Laboratory. This document may be reproduced solely for internal use.

10.8 Matrix duplicates samples are to be analyzed at a frequency of 10% or per analytical batch, whichever is more frequent. Calculate the relative percent difference as follows:

$$RPD = \frac{D_1 - D_2}{(D_1 + D_2)/2} \times 100$$

Where:

RPD = relative percent difference
D_1 = Sample result
D_2 = Matrix duplicate sample result

See Section 11.1.1 for RPD requirements.

10.9 At least one BS must be analyzed for each batch of samples. The BS should be prepared and analyzed in the same manner as the samples.

10.9.1 The BS recovery must be within the range of 80-120%.

10.9.2 If the BS falls outside of this range, then re-prep and re-analyze samples with the following exception: ***For high BS, those samples that are non-detects may be reported.***

10.10 At least one SRM sample must be analyzed for each batch of samples. The SRM is prepared and analyzed in the same manner as the samples.

10.10.1 The SRM recovery must be within the range specified on the certificate of analysis provided with the sample.

10.11 Any deviations from methodology or unusual observations will be noted in the narrative that accompanies data.

10.12 Control charts will be developed for method blanks, BSs, and matrix spikes will be developed to determine whether in-house limits fall acceptable recovery ranges.

10.13 A MDL must be established using a blank fortified at a concentration of two to three times the estimated detection limit. Seven replicate aliquots are processed through the entire method.

11.0 DATA VALIDATION

11.1 Data validation will be accomplished by reviewing all of the quality control parameters and assuring that they are within recommended ranges by completing the Data Review Checklist for Mercury (Attachment D). The only exceptions made to ranges would be the following:

ESS Laboratory. This document may be reproduced solely for internal use.

11.1.1 For duplicates, the RPD should be ± 35% for samples that are >5 x MRL and ± 2xMRL for samples that are ≤5 x MRL. However, there are cases where duplicates may not work. If this is the case, inform client in narrative concerning sample non-homogeneity.

11.1.2 For matrix spikes, the % Recovery should be ±25%. If the matrix spike is outside acceptance criterion, check the LCS. If the LCS is within limits, matrix interferences are present and should be noted in the narrative. NOTE: The PDS is also a check on matrix effect.

11.1.3 Analytical batches with Method blanks above the MRL will be re-prepped and re-analyzed with the following exceptions:

11.1.3.1 Samples that are that are at least twenty times higher than the method blank may be reported.

11.1.3.2 When the method blank is less than 5% of the regulatory limit associated with the analyte the method blank would be acceptable.

11.1.3.3 If the analyte is found in the method blank above the MRL but is not in any of the associated samples, no corrective action is needed.

11.1.4 Any results that are reported with method blank contamination must be B-flagged.

11.2 All unusual observations and method deviations will be noted in the narrative accompanying the data report presented to the client.

12.0 REFERENCES

12.1 SW846 Method 7471B: Mercury in Solid Waste (Manual Cold-Vapor Technique). Third edition, Updates III and IV.

12.2 TNI Standard: Volume 1, Module 2 and Volume 1, Module 4.

12.3 FIMS, Flow Injection Mercury System, Perkin-Elmer Part # 0093-5203

12.4 Flow Injection Mercury/ Hydride analysis, Perkin-Elmer Part #B050-1820.

12.5 DELETED.

12.6 Massachusetts DEP WSC-CAM III B.

13.0 POLLUTION PREVENTION and WASTE MANAGEMENT

MASTER

ESS Laboratory. This document may be reproduced solely for internal use.

13.1 ESS Laboratory's policies on pollution prevention and waste management are covered in SOP 90_0002, Hazardous Waste Contingency and Emergency Response Plan. All employees are trained in the requirements of the SOP.

14.0 DEFINITIONS

14.1 **Calibration Blank (CB)** -- A volume of reagent water fortified with the same matrix as the calibration standards, but without the analytes.

14.2 **Calibration Standard (CAL)** – A solution prepared from the primary dilution standard solution or stock standard solutions. The CAL solutions are used to calibrate the instrument response with respect to analyte concentration.

14.3 **Blank spike (BS)** -- An aliquot of reagent water or other blank matrices to which known quantities of the method analytes are added in the laboratory. The BS is analyzed exactly like a sample, and its purpose is to determine whether the methodology is in control, and whether the laboratory is capable of making accurate and precise measurements.

14.4 **Matrix spike (MS)** -- An aliquot of an environmental sample to which known quantities of the method analytes are added in the laboratory. The MS is analyzed exactly like a sample, and its purpose is to determine whether the sample matrix contributes bias to the analytical results. The background concentrations of the analytes in the sample matrix must be determined in a separate aliquot and the measured values in the MS corrected for background concentrations.

14.5 **Method Blank (MB)** -- An aliquot of reagent water or other blank matrices that are treated exactly as a sample including exposure to all glassware, equipment, and reagents that are used with other samples. The MB is used to determine if method analytes or other interferences are present in the laboratory environment, the reagents, or the apparatus.

14.6 **Material Safety Data Sheet (MSDS)** -- Written information provided by vendors concerning a chemical's toxicity, health hazards, physical properties, fire, and reactivity data including storage, spill, and handling precautions.

14.7 **Method Detection Limit (MDL)** -- The minimum concentration of an analyte that can be identified, measured and reported with 99% confidence that the analyte concentration is greater than zero.

14.8 **Quality Control Sample (QCS)** -- A solution of method analytes of known concentrations that is used to fortify an aliquot of BS or sample matrix. The QCS is different from the source of calibration standards.

14.9 **Stock Standard Solution (SSS)** -- A concentrated solution containing one or more method analytes prepared in the laboratory using assayed reference materials or purchased from a reputable commercial source.

15.0 PERSONNEL QUALIFICATIONS

15.1 Analysts who perform this analysis must have a working knowledge or quantitative and qualitative analysis, instrumental methods of analysis, chemical laboratory methods, and equipment.

ESS Laboratory. This document may be reproduced solely for internal use.

15.2 All analysts, before performing any analysis, participate in the ESS Laboratory training program (SOP80_0016). The training process consists of reading the Standard Operating Procedure, gaining instruction on the procedure from an experienced analyst, and performing the initial demonstration of capability.

16.0 TROUBLESHOOTING

16.1 Refer to Manufacturer's manual(s). Seek guidance from supervisor.

17.0 DATA MANAGEMENT AND RECORDS

17.1 **Data Management** - ESS Laboratory's utilizes the Promium Element LIMS system as part of its Data Management system. Client sample information is entered into ELEMENT LIMS and analyses are assigned to each sample. The LIMS allows EPA hold times, minimum batch QC requirements, and QC criteria to be assigned to each analysis. Standards can be entered and assigned to QC samples through the LIMS. Once analysis has been performed, data is imported using DataTool avoiding manual errors. In conjunction with Crystal Reports, the ELEMENT system allows for a wide variety of reporting formats.

18.2 **Records** – The specific retention periods required in the NELAC Standards, EPA-CFR and state and local statutes are followed or exceeded. At a minimum, data records are retained for five years from last use (10 years for MCP and drinking water). If there is a question about whether a record should be retained or disposed because no specific requirement could be found, the record is retained until such time as a retention period is specified. Records are stored in specified-labeled locations and are easily retrievable. All raw data associated with testing is also retained including; computer printouts, chromatograms, review forms, and logbooks.

19.0 ATTACHMENTS

19.1 Table 1 – Summary of 7471 Method Quality Objectives.

19.2 Table 2 – Summary of Mass DEP CAM Method Quality Objectives.

19.2 Attachment 1 – Modification for Determining Mercury in Fish Tissues

19.3 Attachment A – Mercury Soils Prep Logbook

19.4 Attachment B – Mercury Analysis Logbook

19.3 Attachment C – Typical Autosampler Loading List

19.4 Attachment D – Procedure for recording sample information electronically.

MASTER

ESS Laboratory. This document may be reproduced solely for internal use.

Table 1

Summary of Method Quality Objectives for Method 7471
Mercury Analysis in Soil/Sediment Samples

QC Element	Frequency	Criteria	Corrective Action
Initial Calibration	Daily or each time instrument is set up, prior sample analysis.	• Minimum of calibration blank and five calibration standards. • $R^2 \geq 0.995$ (Do not force through zero for LR)	• No allowance. Perform maintenance and recalibrate.
ICV	Immediately following initial calibration.	• %Rec = 90-110%. • Use separate source from initial calibration standards.	• If criteria are exceeded then remake and re-analyze ICV. If second consecutive ICV meets criteria then calibration is accepted, otherwise recalibrate.
CCV	After calibration, every 10 samples and at end of analytical run.	• Concentration level near midpoint of curve • Same source as calibration standard. • %Rec = 80-120%	• If criteria are exceeded, correct problem and re-analyze CCV. If second consecutive CCV is within criteria then calibration is verified, otherwise re-calibrate system and re-analyze any samples since the last valid CCV.
Calibration Blank	After calibration, at beginning of run, after every 10 samples and at end of analytical run.	• Must be matrix-matched (same acid concentration as standards and QC samples.) • Analytes < ½ MRL	• If criteria are exceeded, correct problem and re-analyze CCV. If second consecutive CCV is within criteria then calibration is verified, otherwise re-calibrate system and re-analyze any samples since the last valid CCB. • B-flag analyte results for all samples associated with blank
Method Blank	One per analytical batch of 20 or fewer samples.	• Analytes < ½ MRL • Analytes < $1/10^{th}$ amount found in any sample (or the regulatory limit, whichever is greater)	• Report exceedance in the project narrative. • Any samples that are non-detect for that analyte may be reported. • Samples with concentrations that are 20x higher than the method blank may be reported. • Samples reported with a contaminated blank must be "B" flagged if re-analysis is not possible.
Blank spike (LCS)	One per analytical batch of 20 or fewer samples.	• Prepared using standard source different from that used for initial calibration • Concentration level should be between low and mid-level standard • Percent recoveries 80-120%.	• Report exceedance in the project narrative. • If LCS is biased high and sample is non-detect, then may report sample result. • Re-digest and re-analyze if the above exception does not apply.

MASTER

Matrix Spike	One per analytical batch of 10 or fewer samples	• Prepared using the same source as the blank spike • Concentration level should be between low and mid-level standard • Matrix specific • Percent recoveries between 80-120%.	• Report exceedance in the project narrative. • Laboratories are expected to develop in-house control limits per each media. Control limits should fall within default limits.
Matrix duplicate	At client's request.	• %RPD≤20%. • Percent recoveries between 80-120%.	• Note exceedance in project narrative.
Method of Standard Additions			When matrix interference is confirmed

ESS Laboratory. This document may be reproduced solely for internal use.

Table 2

Quality Control Requirements and Performance Standards for the ***Analysis of Mercury by Cold Vapor Atomic Absorption (CVAA) Spectrometry*** in Support of Response Actions under the Massachusetts Contingency Plan (MCP)

Table III B-1: Specific QC Requirements and Performance Standards for Mercury, SW-846 7470A & 7471B Using WSC-CAM III B

Required QC Parameter	QC Data Quality Objective	Required Performance Standard	Required for Data Deliverable?	Detection Limit as per Appendix IV of 310 CMR 40.0017	Required Corrective Action if Performance Standard Not Met	Required Analytical Response Action
Initial Demonstration of Proficiency (IDP)	Laboratory Analytical Accuracy & Precision	(1) Must be performed prior to using method on samples. (2) Must be performed for each matrix. (3) Must follow procedures in Section 9.2 of SW-846 7471B and Section 9.4 of SW-846 7000B.	No	NA	Refer to Section 9.2 of SW-846 7471B, Section 9.4 of SW-846 7000B, and Section 1.1.2 of this protocol.	NA
Preparation of Samples	Accuracy and Representativeness	(1) All aqueous and solid samples must be prepared (digested) prior to analysis. See SW-846 7470A and 7471B for details.	No	NA	NA	NA
Initial Calibration	Laboratory Analytical Accuracy	(1) Frequency: Daily prior to sample analysis. (2) Minimum calibration blank plus 5 calibration standards (multi-point); high level standard in calibration defines the upper end of the linear calibration range. (3) Linear regression with correlation coefficient $r \geq 0.995$.	No	NA	Perform instrument maintenance as necessary; re-optimize instrument; re-calibrate as required by SW-846 7470A and 7471B.	Suspend all analyses until initial calibration meets criteria.
Initial Calibration Verification (ICV)	Laboratory Analytical Accuracy	(1) Frequency: Immediately after each initial calibration. (2) Prepared using standard source different than used for initial calibration. (3) Concentration level near midpoint of curve. (4) Percent recovery must be between 90-110%.	No	NA	(1) Reanalyze ICV; if acceptable, no further action required. (2) If reanalysis is still outside of criteria, recalibrate and reanalyze ICV.	Suspend all analyses until ICV meets criteria.
Initial Calibration Blank (ICB)	Laboratory Analytical Sensitivity (Instrument drift & contamination)	(1) Frequency: Immediately after ICV. (2) Prepared using same concentration of acids as calibration standards. (3) Mercury must be <RL.	No	NA	(1) Reanalyze ICB; if acceptable, no further action required. (2) If reanalysis is still outside of criteria, recalibrate and reanalyze ICV & ICB.	Suspend all analyses until ICB meets criteria.

Table III B-1: Specific QC Requirements and Performance Standards for Mercury (SW-846 7470A & 7471B) Using WSC-CAM-III B

Required QC Parameter	Data Quality Objective	Required Performance Standard	Required Deliverable?	Rejection Criteria per WSC-07-350	Required Corrective Action	Required Analytical Response Action
Low-Level Calibration Verification (LLCV)	Laboratory Analytical Sensitivity (verify low-end of calibration range / verify RL)	(1) Frequency: Daily prior to sample analysis if initial calibration did not contain a low-level standard at the RL. If initial calibration includes the RL as the low-level standard in the initial calibration curve, then LLCV is not required. (2) Prepared using same source as initial calibration standards. (3) Concentration level must be at the level of the RL for mercury. (4) Percent recovery must be 70-130%.	No	NA	(1) Reanalyze LLCV; if acceptable, no further action required. (2) If reanalysis is still outside of criteria and concentrations of mercury are ≤10x RL in associated field samples, recalibrate and reanalyze LLCV and associated samples. (3) If concentrations of mercury are >10x RL in associated field samples, include explanation in laboratory narrative; no further action required.	Suspend all analyses until LLCV meets criteria unless the concentrations of mercury are >10x RL in associated field samples.
Continuing Calibration Verification (CCV)	Laboratory Analytical Accuracy	(1) Frequency: Every 10 samples and at the end of the analytical run. (2) Prepared using same source as initial calibration standards. (3) Concentration level near midpoint of curve. (4) Percent recovery must be 80-120%.	No	NA	(1) Reanalyze CCV; if acceptable, no further action required. (2) If reanalysis is still outside of criteria, recalibrate and reanalyze all associated samples since last compliant CCV – unless (3) applies. (3) If recovery is high (>120%) and all associated sample results are non-detected, no corrective action required.	If (3) applies, include explanation in laboratory narrative.

Table III B-1: Specific QC Requirements and Performance Standards for Mercury (SW-846 7470A & 7471B) Using WSC-CAM III B

Required QC Parameter	Data Quality Objective	Required Performance Standard	Required Deliverable?	Rejection Criteria per WSC-07-350	Required Corrective Action	Required Analytical Response Action
Continuing Calibration Blank (CCB)	Laboratory Analytical Sensitivity (Instrument drift & contamination)	(1) Frequency: Every 10 samples following CCV and at the end of the analytical run. (2) Prepared using same concentration of acids as calibration standards. (3) Mercury must be <RL.	No	NA	(1) Reanalyze CCB; if acceptable, no further action required. (2) If reanalysis still outside of criteria, recalibrate and reanalyze all associated samples since last compliant CCB – unless (3) applies. (3) If concentration of mercury in CCB is >RL but all associated sample results are either non-detected or >10x concentration of mercury in CCB, no corrective action required.	If (3) applies, include explanation in laboratory narrative.
Method Blank (MB)	Laboratory Method Sensitivity (contamination evaluation)	(1) Frequency: One per digestion batch of ≤20 field samples. (2) Must be digested with the samples using the same preparation method as the samples. (3) Mercury must be <RL.	Yes	NA	(1) Reanalyze MB; if acceptable, no further action required. (2) If reanalysis is still outside of criteria, redigest and reanalyze MB and all associated field samples in batch – unless (3) applies. (3) If concentration of mercury in MB is >RL but all associated sample results are either non-detected or >10x concentration of mercury in MB, no corrective action required.	If (3) applies, include explanation in laboratory narrative.

Table III B-1. Specific QC Requirements and Performance Standards for Mercury (SW-846 7470A & 7471B) Using WSC-CAM-III B

Required QC Parameter	Data Quality Objective	Required Performance Standard	Required Deliverable?	Rejection Criteria per WSC-07-350	Required Corrective Action	Required Analytical Response Action
Laboratory Control Sample (LCS)	Laboratory Analytical Accuracy	(1) Frequency: One per digestion batch of ≤20 field samples. (2) Must be matrix-matched by digesting with the samples using the same preparation method. CAM requires a solid Standard Reference Material (SRM) be prepared and analyzed with solid field samples as the "solid LCS." An SRM is a soil or sediment matrix that contains mercury at a known concentration and with 95% confidence limits. (3) Concentration level for aqueous LCS near midpoint of curve. (4) Percent recovery for mercury must be 80-120% for aqueous LCS and within vendor control limits (95% confidence limits) for solid LCS.	Yes	Aqueous LCS: Recovery <50%: mercury results in associated samples may be rejected.	(1) Reanalyze LCS; if acceptable, no further action required. (2) If reanalysis is still outside of criteria and LCSD is in-control for mercury, no corrective action required. (3) If LCS and LCSD are both outside of criteria, redigest and reanalyze LCS/LCSD and all associated field samples in batch.	Report recovery exceedances in laboratory narrative.
LCS Duplicate (LCSD)	Laboratory Analytical Accuracy & Precision	(1) Frequency: One per digestion batch of ≤20 field samples ONLY if not performing project-specific MD. (2) Must be matrix-matched by digesting with the samples using the same preparation method. CAM requires a solid SRM be prepared and analyzed with solid field samples as the "solid LCSD." An SRM is a soil or sediment matrix that contains mercury at a known concentration and with 95% confidence limits. (3) Concentration level must be same as LCS. Analyze immediately following LCS. (4) Percent recovery for mercury must be 80-120% for aqueous LCS and within	Yes ONLY if no MD	Same as above for LCS for recovery evaluation	(1) Reanalyze LCSD; if acceptable, no further action required. (2) If reanalysis is still outside of recovery criteria and LCS is in-control for mercury, no corrective action required. (3) If LCSD and LCS are both outside of recovery criteria, redigest and reanalyze LCS/LCSD and all associated field samples in batch.	Report recovery and RPD exceedances in laboratory narrative.

Table III B-1: Specific QC Requirements and Performance Standards for Mercury (SW-846 7470A & 7471B) Using WSC-CAM III B

Required QC Parameter	Data Quality Objective	Required Performance Standard	Required Deliverable?	Rejection Criteria per WSC-07-350	Required Corrective Action	Required Analytical Response Action
		vendor control limits (95% confidence limits) for solid LCS. (5) RPDs must be ≤20 for aqueous LCS/LCSD and ≤30 for solid LCS/LCSD.				
Matrix Spike (MS) Project-Specific	Method Accuracy in Sample Matrix	(1) Solid Samples (Soil/Sediment) Frequency: One per 20 field samples per matrix; designated by data user on COC or at project set-up. Aqueous Samples Frequency: One per digestion batch of ≤20 field samples per matrix strongly recommended (designated by data user on COC or at project set-up). (2) Concentration levels near midpoint of curve. (3) Percent recovery for mercury must be 75-125%.	Yes ONLY when requested by the data user	Recovery <30%: affects non-detects for mercury in all associated samples.	(1) Reanalyze MS; if acceptable, no further action required. (2) After reanalysis, if MS recovery is 30-74% or >125% and LCS was in-control, no corrective action is required. (3) If MS recovery is <30% and associated with non-detected results, redigest (homogenize sample well) and reanalyze sample/MS pair. Report results and narrate.	Report MS exceedances in laboratory narrative. If redigested due to recoveries <30%, report both sets of sample/MS data.
Matrix Duplicate (MD) Project-Specific	Method Precision in Sample Matrix	(1) Frequency: One per digestion batch of ≤20 field samples per matrix is strongly recommended (designated by data user on COC or at project set-up). (2) Prepare by digesting and analyzing an additional aliquot of the same field sample used for MS. (3) RPD for mercury must be ≤20 for aqueous and ≤35 for solids.	Yes ONLY when requested by the data user	NA	Narrate.	Report exceedances in laboratory narrative.

Table III B-1 Specific QC Requirements and Performance Standards for Mercury (SW-846 7470A & 7471B) Using WSC-CAM-III B

Required QC Parameter	Data Quality Objective	Required Performance Standard	Required Deliverable?	Rejection Criteria per WSC-07-350[1]	Required Corrective Action	Required Analytical Response Action
General Reporting Issues	NA	(1) Non-detected values must be reported with the sample-specific RL for mercury using all appropriate preparation/dilution factors. (2) The laboratory must only report values ≥ the sample-specific RL. (3) Sample concentrations that exceed the highest calibration standard must be diluted and reanalyzed to fall within the linear calibration range. (4) Results for soils/sediments must be reported on a dry-weight basis for comparison to MCP regulatory standards. (5) Results must be reported with 2 or more "significant figures" if ≥RL. If reporting values below the RL, report with 1 or more "significant figures".[2] (6) Refer to Appendix III B-1 for chain-of-custody requirements regarding preservation, cooler temperature, and holding times.	NA	NA	NA	(1) The performance of dilutions must be documented in the laboratory narrative or on the report form. Unless due to elevated concentrations of mercury, reasons for dilutions must be explained in the laboratory narrative. (2) If samples are not preserved properly or are not received with an acceptable cooler temperature, note the non-conformances in the laboratory narrative. (3) If samples are prepared and/or analyzed outside of the holding time, note the non-conformances in the laboratory narrative. (4) Narrate any additional method non-compliance or sample-specific anomaly.

[1] As per Appendix IV of MassDEP Policy #WSC-07-350, *MCP Representativeness Evaluations and Data Usability Assessments*, September 2007, If these results are observed, data users should consider nondetect results as unusable and detected results as estimated with a significant low bias.

[2] Reporting protocol for "significant figures" is a policy decision included for standardization and consistency for reporting of results and is not a definition of "significant" in the scientific or mathematical sense.

ATTACHMENT I

Project Specific SOP Modification
Mercury in Fish Tissues

Project Start Date: 9/01

Project ID: Horsley & Witten – Tissue Project

SOP(s) Modified: Acid Digestion for Metals in Soil/Sediment Samples for Hg FIMS, SOP 7471A

Modification Objective: Lab will receive tissue samples that need to be analyzed for low concentrations of mercury.

a. Samples need to be completely digested with minimal loss of volatile metals.

Specific SOP Modifications:

Homogenization: Each tissue sample will be comprised of a number of individual organisms. In order to ensure homogeneity, the entire sample will be frozen, transferred to a clean grinding vessel, and physically reduced. Sample reduction is performed by pulsing the tissue until a fine texture is achieved, avoid over-processing the tissues. Samples are then transferred to appropriate containers for storage and frozen until analysis.

Sample Prep: Place 0.5 g of homogenized tissue sample into a 50 ml plastic digestion tube. Add enough DI water to barely cover the sample (avoid excess water which will dilute the acid). Cap tube and place into the freezer until frozen. Once frozen, add 4ml of conc H_2SO_4, recap loosely and let sit overnight. Solution will appear cloudy, with particulate. Add 1-ml conc HNO_3 and volumize to 20 ml. Add 3 ml $KMNO_4$ and wait 15 minutes to ensure that solution remains purple. If solution becomes colorless, add $KMNO_4$ crystals, a few at a time with mixing, until solution remains purple. Ensure the blank is treated with the same amount of $KMNO_4$. Add Potassium persulfate and volumize to 40 ml. Cook for 2 hours. Samples are now ready to be analyzed by Hg FIMS (SOP 7471A).

Spiking Solution:

Prepared by adding 120ul of Hg standard (7.2.2.1) to either DI water for LCS or tissue sample for the matrix spike.

SRM Mussel Tissue (NIST) Laboratory Control Sample: With every batch of samples a SRM will be prepared for control purposes. The control limits for the SRM are found on the Certified Analysis sheet sent with the standard. An aliquot of 0.5 g is weighed out and processed the same as the samples.

Batching:
Each ten samples must be digested with a method blank, blank spike, matrix spike sample, and duplicate sample.

Data Reporting: All results are reported to the Method Reporting Limit of 0.1 mg/Kg.

The following is reported with each batch of samples:

- Method blank
- Blank Spike
- Sample results
- Matrix spike result
- Duplicate sample result

ESS Laboratory. This document may be reproduced solely for internal use.

Attachment A

ESS Laboratory

Mercury Soils Prep Logbook

Reagent IDs:

Analyst: Aqua Regia

Date: $KMnO_4$

Cal std ID*: $NaCl\text{-}NH_2OH^*HCl$

ICV std ID**:

Sample ID	Wgt (g)	Quality Control ID/Lot #	Spike wt/vol	COMMENTS	Final Vol (ml)	Bath #	Temp. (°C)	Time in	Time out

* Calibration standards are prepared daily at 0.0, 0.5, 1.0, 3.0, and 5.0 ppb. See SOP for preparation instructions.

**ICV is prepared daily at a concentration of 2.0 ppb. See SOP for preparation instructions.

MASTER

ESS LABORATORY

MERCURY ANALYSIS LOGBOOK

SOP NO: 30_2451 / 30_7471A

$SnCl_2 \cdot 2H_2O$ ID:

STANDARD ID:

CARRIER ID:

CCV ID:

FIMS AUTOSAMPLER TRAY SEQUENCE

#	SAMPLE	Dilution	#	SAMPLE	Dilution	#	SAMPLE	Dilution
1	0.0 ppb/ICCB	0/40	31			61		
2	0.5 ppb	0.02/40	32			62		
3	1.0 ppb	0.04/40	33			63		
4	3.0 ppb	0.12/40	34			64		
5	5.0 ppb	0.20/40	35			65		
6	10.0 ppb / NA	0.40/40	36			66		
7	0.25 ppb / NA	0.01/40	37			67		
8	ICV	0.12/40	38			68		
9			39			69		
10			40			70		
11			41			71		
12			42			72		
13			43			73		
14			44			74		
15			45			75		
16			46			76		
17			47					
18			48					
19			49					
20			50					
21			51					
22			52					
23			53					
24			54					
25			55					
26			56					
27			57					
28			58					
29			59					
30			60					

SIF:

RDS:

ANALYST:

DATE:

CONTROL# 30.0009-0204A

Attachment B

MASTER

Attachment C

Autosampler Loading List

Sample Information File: 082102A.SIF
Methods: Hg_5ppb S

Location	Elements	Solution
0	Hg	Wash Solution
1	Hg	Calib Blank
	Hg	ICCB: 0.0000 µg/L
2	Hg	0.5ug/L: 0.50 µg/L
3	Hg	1.0 ug/L: 1.00 µg/L
4	Hg	3.0ug/L: 3.00 µg/L
	Hg	STD 3.0: 3.0000 µg/L
5	Hg	5.0ug/L: 5.00 µg/L
6	Hg	ICV: 2.0000 µg/L
9	Hg	Sample: 020820pbs
10	Hg	Sample: 020820lcss
11	Hg	Sample: 020820era x2
12	Hg	Sample: 02080181-02 x2
13	Hg	Sample: 02080181-04 x2
14	Hg	Sample: 02080181-06 x2
15	Hg	Sample: 02080186-01 x2
16	Hg	Sample: 02080187-01 x2
17	Hg	Sample: 02080181-06dup x2
18	Hg	Sample: 02080181-06ms x2
19	Hg	Sample: 02080181-06sdx10
20	Hg	Sample: 02080181-06pds x2

MASTER

ATTACHMENT C

ATTACHMENT D

Procedure for Recording Sample Information Electronically

1. After samples have been logged into the LIMS, create a Batch and Bench Sheet.

2. Export preparation sequence from LIMS to Network Directory Q:\Metals\Log Books\ Category (e.g. Metals Prep Aqueous) \File No., by highlighting the Batch No. in the Navigation Pane and clicking on EXPORT at the top of the screen and saving in the appropriate folder.

3 Access the File from the Tablet and enter Sample Data into the pertinent fields of the MS Excel spreadsheet. All information normally entered into a paper logbook will be entered here.

4. Go to the appropriate Bench Sheet, in the LIMS and click OPEN at the bottom of the screen. Double click the correct batch ID and the information is automatically entered into the LIMS.

5. Click SAVE.

ESS Laboratory
Division of Thielsch Engineering
Cranston, RI

SOP NO. 40_0009
TOTAL & AMENABLE CYANIDE BY DISTILLATION
(EPA METHODS 335.4//SM 4500CN-C,E,G,I//SW846 9010B/ 9014 and 9010/9012//MCP)

REVIEWED BY:

Operations Manager	Date 2/8/11
QA Officer	Date 1/25/11
Laboratory Director	Date 2/8/11

MASTER

Master copy marked red. Controlled copies marked green.

TOTAL & AMENABLE CYANIDE BY DISTILLATION
(EPA METHODS 335.4//SM 4500CN-C,E,G,I //SW846 9010B/ 9014// 9010/9012 and MCP)

1.0 SCOPE AND APPLICATION

1.1 Cyanide is defined as cyanide ion and complex cyanides converted to hydrocyanic acid (HCN) by reaction in a reflux system of a mineral acid in the presence of magnesium ion.

1.2 This method is applicable to the determination of cyanide in drinking water, surface and saline waters, domestic and industrial wastes, soils, bottom deposits, and sludge like materials.

1.3 This method is applicable to the determination of cyanides amenable to chlorination in drinking, surface and saline waters, domestic and industrial wastes.

1.4 The colorimetric procedure is used for concentrations below 1 mg/l of cyanide and is sensitive to approximately 0.05 mg/L. This procedure may be used on soil and solids with sensitivity to approximately 2.5 mg/Kg when 1 g of sample is distilled.

2.0 METHOD SUMMARY

2.1 The cyanide as hydrocyanic acid (HCN) is released from cyanide complexes by means of a reflux-distillation operation and absorbed in a scrubber containing sodium hydroxide solution. The cyanide ion in the absorbing solution is then determined colorimetrically.

2.2 Cyanide is converted to cyanogen chloride, CNCl, by reaction with chloramine-T at a pH less than 8, without hydrolyzing to the cyanate. After the reaction is complete, color is formed on the addition of pyridine-barbituric acid reagent. The absorbance is read at 578 nm for pyridine-barbituric acid. To obtain colors of comparable intensity, it is essential to have the same salt content in both the sample and the standard.

2.3 The titrimetric measurement uses a standard solution of silver nitrate to titrate cyanide in the presence of a silver sensitive indicator.

2.4 If Amenable Cyanide is required, a portion of the sample is chlorinated at a pH > 11 to decompose the cyanide. Cyanide levels in the chlorinated sample are then determined. The difference between total cyanide in the chlorinated and unchlorinated samples is the cyanide amenable to chlorination.

2.5 The various methods are as follows:

ESS Laboratory. This document may be reproduced solely for internal use.

2.5.1 SW846-9010/9014 Distillation for Total or Amenable Cyanide followed by titrimetric or colorimetric determination of cyanide.

2.5.2 SW846-9010/9012 Distillation for Total or Amenable Cyanide followed by automated colorimetric determination of cyanide.

2.5.3 SM 4500 CN C, E Large scale distillation for total cyanide in a variety of water matrices, followed by titrimetric or colorimetric determination of cyanide.

2.5.4 EPA Method 335.4 Total Cyanide by semi-automated colorimetry.

2.5.5 SM 4500 CN C, G Cyanides amenable to chlorination after distillation.

2.5.6 SM 4500 CN C, I Weak and Dissociable Cyanide.

2.5.7 MCP WSC-CAM VIA Total Cyanide/ Physiologically Available Protocol.

2.5.8 State of Connecticut DEP Recommended Reasonable Confidence Protocols (RCPs), Version 2.0, July 2006.

3.0 HEALTH AND SAFETY

3.1 Each employee has been trained and has acknowledged being trained in the safe use and handling of chemicals being used in the laboratory. This training has been performed according to the ESS Training SOP 80_0016 and by the Chemical Hygiene Plan, SOP No. 90_0001, in conjunction with the Safety orientation.

3.2 All sample and material handling should be done in a hood while using proper protective equipment to minimize exposure to liquid or vapor. Minimum personnel protective equipment includes the use of laboratory safety glasses, a lab coat or apron, and protective gloves.

3.3 Stock solutions and reagents used for sample preservation are used in a hood.

3.4 The vendor supplied Material Safety Data Sheets for the concentrated chemicals used in the laboratory are kept on file in departmental locations so as to be available for all employees to review.

4.0 SAMPLE PRESERVATION, CONTAINERS, HANDLING AND STORAGE

4.1 The sample should be collected in plastic or glass bottles of 1 liter or larger size.

4.2 Oxidizing agents such as chlorine decompose most of the cyanides. Test a drop of the sample with potassium iodide-starch test paper (KI-starch paper); a blue color indicates the need for treatment. Add ascorbic acid or sodium arsenite, a few crystals at a time, until a drop of sample produces no color on the indicator paper. Then add an additional 0.06 g of ascorbic acid or sodium arsenite for each liter of sample volume.

4.3 Sample must be preserved with sodium hydroxide (pH $\geq$ 12) at the time of collection (2 ml of 10N sodium hydroxide per liter of sample is usually sufficient).

MASTER

ESS Laboratory. This document may be reproduced solely for internal use.

4.4 Samples should be analyzed as rapidly as possible after collection. If storage is required, the samples should be stored in a refrigerator that will maintain temperature at 4°C for a maximum of 14 days.

5.0 INTERFERENCES AND POTENTIAL PROBLEMS

5.1 Interferences are eliminated or reduced by using the distillation procedure described in Procedure 8.2 and 8.3.

5.2 Sulfide interference can be removed by adding an excess of bismuth nitrate to the waste before distillation. Samples that contain hydrogen sulfide, metal sulfides or other compounds that may produce H_2S during the distillation should be treated by the addition of bismuth nitrate or ≥50mg lead carbonate (SM4500-CN-C).

5.3 Fatty acids will distill and form soaps under the alkaline titration conditions, making the end point almost impossible to detect.

5.3.1 Acidify the sample with dilute acetic acid to pH 6.0 to 7.0. CAUTION: This operation must be performed in the hood and the sample left there until it can be made alkaline again after the extraction has been performed.

5.3.2 Extract with iso-octane, hexane or chloroform (preference in order named) with a solvent column equal to 20% of the sample volume. One extraction is usually adequate to reduce the fatty acids below the interference level. Avoid multiple extractions or a long contact time at low pH in order to keep loss of HCN at a minimum. When the extraction is completed, immediately raise the pH of the sample to above 12 with dilute NaOH solution.

5.4 High results may be obtained for samples that contain nitrate and/or nitrite. During the distillation, nitrate and nitrite will form from nitrous acid which will react with some organic compounds to form oximes. These compounds formed will decompose under test conditions to generate HCN. The interference of nitrate and nitrite is eliminated by pretreatment with sulfamic acid.

6.0 EQUIPMENT/APPARATUS

6.1 Lab-crest Midi-Dist Reflux Distillation Apparatus or equivalent

6.2 pH Paper

6.3 KI Starch paper.

6.4 Lead Acetate paper

6.5 Spectrophotometer suitable for measurements at 578 nm with a 1.0 cm cell.

MASTER

6.6 Class A volumetric flasks, specimen cups

ESS Laboratory. This document may be reproduced solely for internal use.

6.7 Adjustable pipettes, calibrated according to SOP 110_0005.

6.8 Lachat Quick Chem 8000 Autoanalyzer (EPA Methods 335.4 and SW846-9010/9012 only). Refer to Addendum 2.

7.0 REAGENTS AND STANDARDS

7.1 **Reagents**:

7.1.1 **Sodium hydroxide solution, 0.25N**: Dissolve 10 g of NaOH in distilled water, and dilute to 1 liter with distilled water.

7.1.2 **Sodium hydroxide solution, 1.25N:** Dissolve 50 g of NaOH in distilled water, and dilute to 1 liter with distilled water.

7.1.3 **Lead carbonate**: PbCO3, powdered. If sulfide is suspected in sample add 0.05g lead carbonate to absorbing tube (SM4500-CN-C).

7.1.4 **Sulfuric acid**: **18N**: slowly add 500 ml of concentrated H_2SO_4 to 500 ml distilled water.

7.1.5 **Sodium Dihydrogen Phosphate, 1M**: Dissolve 138 g of $NaH_2PO_4 \bullet H_2O$ in 1 liter of distilled water. Refrigerate this solution.

7.1.6 **Chloramine-T solution**: Dissolve 0.5 g of white, water soluble Chloramine-T in 50 ml of distilled water and refrigerate until ready to use. This reagent must be prepared daily.

7.1.7 **0.1 N Sodium Arsenite**: Commercially prepared.

7.1.8 **Pyridine-Barbituric Acid Reagent**: Place 15 g of barbituric acid in a 250 ml volumetric flask and add just enough distilled water to wash the sides of the flask and wet the barbituric acid. Add 75 ml of pyridine and mix. Add 15 ml of conc. HCl, mix, and cool to room temperature. Dilute to 250 ml with distilled water and mix. This reagent is stable for approximately six months if stored in a cool, dark place.

7.1.9 **Magnesium chloride solution**: Weigh 510 g of $MgCl_2 \bullet 6H_2O$ into a 1000 ml flask, dissolve and dilute to 1 liter with distilled water.

7.1.10 **Sulfamic Acid Solution**: Dissolve 100 grams of Sulfamic Acid in 1 Liter of distilled water.

7.1.11 ASTM Type 2 **DI water**.

7.1.12 **Bismuth Nitrate**, (0.062M): Dissolve 30 g bismuth nitrate in 100 ml of DI water. While stirring, add 250 ml of glacial acetic acid. Stir until dissolved and dilute to 1 liter in DI water.

ESS Laboratory. This document may be reproduced solely for internal use.

7.1.13 Standard **silver nitrate solution,** 0.0192N: Commercially prepared.

7.1.14 **Rhodanine** indicator: Dissolve 20mg of p-dimethyl-amino-benzalrhodanine in 100 ml of acetone.

7.1.15 **Sodium Hydroxide dilution solution**: Dissolve 1.6 g of NaOH in 1 liter of DI water.

7.1.16 **Calcium Hypochlorite solution (0.035M)**: Dissolve 5 g of calcium hypochlorite in 100 ml of water. Shake before use.

7.1.17 **Clorox bleach**: purchased commercially.

7.1.18 **Potassium cyanide (primary standard)**: used to prepare initial calibration and continuing calibration verification standards. Fisher P223-100 or equivalent

7.1.19 **Potassium cyanide (secondary standard)**: used to prepare initial calibration verification standard (ICV), laboratory control samples (LCS)/Blank spikes (BS), and matrix spikes. Aldrich 207810-25G or equivalent.

7.1.20 **Dilute Acetic Acid** Mix 1 volume of Glacial Acetic Acid, ACS Reagent Grade, with 9 volumes of DI water.

7.1.21 **Zinc Acetate Solution** Dissolve 120 g Zinc Acetate Dihydrate, ACS Reagent Grade, in 500 ml DI water.

7.1.22 **Acetate Buffer** Dissolve 410 g Sodium AcetateTrihydrate, ACS Reagent Grade, 500 ml DI water. Adjust to pH 4.5 with glacial acetic acid.

7.1.23 **Methyl Red Indicator**

7.2 **Standards**: Standards 7.2.1 and 7.2.3 are prepared from both the primary and secondary standards (7.1.18 and 7.1.19).

7.2.1 **Stock cyanide solution (1000 mg/L)**: Dissolve 0.251 g of KCN and 0.2 g KOH in 90 ml of distilled water. Standardize ***monthly*** with 0.0192 N $AgNO_3$ using the instructions in 7.2.3 except dilute 25 ml of stock cyanide solution to 100 ml with NaOH dilution solution before testing (use 25 ml of diluted stock). Dilute to appropriate concentration so that 1 ml = 1 mg CN. **Expires in 6 months or if titrated value is not between 975- 1025 mg/L.**

7.2.2 **Standard cyanide solution, intermediate (100 mg/L)**: Dilute 25 ml of stock (1 ml = 1 mg CN) to 250 ml with 0.25N sodium hydroxide solution (see 7.1.1) (1 ml = 100.0 µg). This solution must be titrated ***weekly***. **Expires in 6 months or prepare new standard if titrated value is not between 97.5- 102.5 mg/L.**

WASTEN

7.2.2.1 Fill a burette with silver nitrate solution (see 7.1.11).

7.2.2.2 Take 100 ml of NaOH dilution solution (see 7.1.13) and add 0.5 ml of rhodanine indicator (see 7.1.12).

7.2.2.3 Titrate until the first change of color from a canary yellow to a salmon hue. This value will be the blank correction. Record in Attachment C.

7.2.2.4 Measure 25 ml of intermediate standard cyanide solution (100ppm – see 7.2.2) into an Erlenmeyer flask. Titrate until first color change. Record in Attachment C.

7.2.2.5 Calculate the concentration using the following equation:

$$\text{Concentration} = \frac{(\text{ml of titrant sample} - \text{ml of titrant blank}) \times 1000}{\text{ml of sample}}$$

7.2.3 **Working standard cyanide solution (5 mg/L)**: *Prepare fresh daily* by diluting 1.25 ml of intermediate cyanide solution to 25 ml with 0.25N sodium hydroxide solution (see 7.1.1). 1 ml = 5.0 µg CN.

7.2.4 **Low level blank spike (0.1 mg/L)**: Into a specimen cup pipette 1 ml of secondary working standard cyanide solution. Dilute to 50 ml with 0.25 N NaOH. ***Prepare fresh daily.***

7.2.5 **High level blank spike (0.4 mg/L)**: Into a specimen cup pipette 4 ml of secondary working standard cyanide solution. Dilute to 50 ml with 0.25 N NaOH. Two high level blank spikes must be analyzed with each analytical batch to satisfy MA MCP requirements. ***Prepare fresh daily.***

7.2.6 **Matrix spike (0.2 mg/L)**: To a separate aliquot of sample placed in the distillation tube, pipette 2 ml of secondary working standard cyanide solution into the tube. This is equivalent to 0.2 mg/L of CN^- spiked into 50 ml of sample or 10 mg/Kg of CN^- spiked into 1 g of sample.

7.3 Reagents and Standards for EPA Methods 335.4 and SW846-9010/9012
Refer to Addendum 2.

7.4 Reagents and Standards for MADEP WSC-CAM VIA
Refer to Addendum 3.

7.4.1 Note that the CAM method requires the use of a solid Standard Reference Material (SRM). The SRM to be used is Trace Metals/Cyan – Loam 5, RTC Catalog No. CRM022-020

WASTE

8.0 PROCEDURE

ESS Laboratory. This document may be reproduced solely for internal use.

8.1 **Sample preparation**:

8.1.1 Pour out 25 ml of sample into a specimen cup. Take a pH of each sample and record. The pH should be ≥12. If pH is not 12 or greater, notify the lab supervisor. This needs to be noted on the client's narrative. See Attachment A.

8.1.2 Test sample with lead acetate paper. If paper turns black, sulfide is present and sample must be treated. This is accomplished by adding 5 ml of bismuth nitrate to the distillation flask prior to the sulfamic acid addition. Note in Attachment A.

8.1.3 Test sample for excess chlorine using KI starch paper. If paper turns blue, see section 4.2 for treatment instructions. Note in Attachment A.

8.2 If Amenable Cyanide analysis is required: (if not required skip to 8.3)

8.2.1 Add Clorox bleach or calcium hypochlorite solution drop-wise while agitating and keeping the pH between 11 and 12 with 1.25 N sodium hydroxide until an excess of chlorine is present as indicated by KI starch paper turning blue. Carry out in an amber container.

8.2.2 Test for excess chlorine and maintain this excess for one hour while providing continuous stirring. Make sure to check pH and keep it between 11 and 12.

8.2.3 After one hour, add 1 ml portions of 0.1 N sodium arsenite until KI starch paper shows no residual chlorine, and then add another 5 ml sodium arsenite to ensure the presence of excess reducing agent.

8.3 Preparation of the standard curve: A new curve, consisting of a blank and six standards, is generated quarterly or when a new primary stock solution is prepared. *When analyzing samples per Mass 310 CMR 42, the calibration curve* ***must be prepared daily***. The primary working cyanide standard is used to prepare all calibration standards. The calibration curve standards are diluted to volume with 0.25N Sodium Hydroxide; this insures that the standards have the same salt concentration as the standard.

Volume of Standard (ml)	Final Volume (ml)	Final Conc. (mg/L)
0	50	0
0.20	50	0.02
1.00	50	0.10 – CCV
2.00	50	0.20
3.00	50	0.30
4.00	50	0.40 - CCV
5.00	50	0.50

MASTER

NOTE: EPA Method 335.4 requires a 5 point calibration curve, as follows:

Volume of Standard (ml)	Final Volume (ml)	Final Conc. (mg/L)
0	50	0
0.50	50	0.05
1.00	50	0.10
2.00	50	0.20– CCV
3.00	50	0.30
4.00	50	0.40

8.4 Sample Distillation:

8.4.1 MIDI Distillation

8.4.1.1 Make sure all vacuum valves are off.

8.4.1.2 Measure 50 ml of sample into a clean specimen cup (for soils use 1 g brought up to 50 ml in DI water). See section 10.0 for instructions on batch criteria. Pour the sample into the reflux flask located in the back row of the apparatus. Measure 40 ml of 0.25N NaOH and pour into the absorber flask located in the front of the apparatus. Record on Attachment A

8.4.1.3 Assemble the remaining glass apparatus. (Reflux impinger, absorber impinger and cold finger).

8.4.1.4 Repeat steps 8.3.1 through 8.3.2 for all samples.

8.4.1.5 Turn on cooling water to condensers, at approximately 6 GPH per sample.

8.4.1.6 Turn on main vacuum and open vacuum valves.

8.4.1.7 Add 2 ml of sulfamic acid solution through the air inlet above the reflux flask. Allow the vacuum to draw for 5 minutes. Rinse inlet minutely with DI water.

8.4.1.8 Add 5 ml of 18N sulfuric acid and allow the vacuum to draw for 10 minutes.

8.4.1.9 Add 2 ml of magnesium chloride solution, rinse the inlet minutely with DI water, and allow vacuum to draw for 5 minutes.

8.4.1.10 Set timer at 110 minutes and check vacuum bubble rate (should be 1-3 bubbles/second in reflux flask.)

ESS Laboratory. This document may be reproduced solely for internal use.

8.4.1.11 Turn unit on by pushing red rocker switch toward rear of unit. Start timer and record date and time on Attachment A.

8.4.1.12 At the end of the distillation period and after the timer has turned off the heater power, allow tubes to cool.

8.4.1.13 Using a minimal amount, rinse 0.25 N NaOH through the absorber impinger to clear all NaOH into the absorber flask.

8.4.1.14 Transfer the sample to a clean specimen cup and dilute to 50 ml with 0.25 N NaOH.

8.5 Sample Coloring

8.5.1 Aliquot 25 ml of distilled samples into specimen cups.

8.5.2 Check with lead acetate strips. If the paper turns black, treat by adding a small amount of lead carbonate, which will cause a black precipitate to occur. Swirl sample, and then filter to remove the precipitate. This step may have to be done a few times to remove all of the sulfide. Record on Attachment A.

8.5.3 Add 7.5 mL Phosphate Buffer (see Section 7.1.5) and swirl to mix.

8.5.4 Add 1.0 ml of Chloramine-T solution (see Section 7.1.6) and swirl to mix. At this point, test the sample with KI paper. If enough Chloramine has been added, the paper will turn blue-black. Otherwise continue adding Chloramine-T 1 ml at a time until the paper turns blue-black. Mix thoroughly and let stand exactly 2 min.

8.5.5 Add 2.5 ml of pyridine-barbituric acid solution (see Section 7.1.8.) and swirl to mix.

8.5.6 Volumize to 50 ml with DI water and swirl to mix.

8.5.7 Let color develop for exactly 8 minutes and read at 578 nm.

8.5.8 If the method of choice is SM4500 CN-E and the matrix is drinking water, instead of adding Phosphate Buffer, dilute to 40 mL with NaOH dilution solution, then add 1 mL acetate buffer and 2 mL Chloramine-T solution (see Section 7.1.6). Mix thoroughly and let stand exactly 2 min. Add 5 ml of pyridine-barbituric acid solution (see Section 7.1.8), dilute to volume with DI water and swirl to mix thoroughly. Proceed to Section 8.5.7.

8.5.9 If the method of choice is 335.4 or 9010/9012, then an automated continuous flow analyzer such as the Lachat Quick Chem 8000 should be used. Refer to Addendum 2.

ESS Laboratory. This document may be reproduced solely for internal use.

8.5.9.1 Fill and connect the reagent containers and start the system. Allow the instrument to warm up as required. Pump all the reagents with 0.25N NaOH in the sample line, until a stable baseline is achieved.

8.5.9.2 Place standards, distilled standards and unknown samples (all in 0.25 NaOH) in the sample tray. Calibrate the instrument and begin the analysis.

8.5.10 If the method of choice is SM 4500 CN I, follow the procedure described in Section 8, with the following modifications:

8.5.10.1 Do not add sulfamic acid.

8.5.10.2 Instead of sulfuric acid and magnesium chloride,reagents, add 20 ml each of the acetate buffer and zinc acetate solutions through the air inlet tube, along with 3 drops of methyl red indicator. Rinse air inlet tube with water and let air mix contents. If the solution is not pink, adjust with dilute acetic acid.

8.5.11 If the method of choice is the MADEC PAC, follow the MIDI distillation procedure described in Section 8.3.1, substituting 7.5 ml of the phosphate buffer for the 18N sulfuric acid, in order to maintain a constant pH between 1.25 and 2.0 throughout the entire digestion process. Distillation is carried out for one hour at a temperature of 78°C. Carry out sample coloring as described in Section 8.4, Follow QC procedures described in Section 10 and using a negative LCS consisting of Prussian Blue which is digested and analyzed under the same conditions. LCS recovery criterion is less than 10% of the nominal value.
Refer to Addendum 3 for a more complete description of this method.

9.0 CALCULATIONS (DATA INTERPRETATION)

9.1 Prepare a standard curve by plotting the absorbance value of standards versus the corresponding cyanide concentrations.

9.1 Calculate Cyanide concentration of sample(s) by entering the following information in the Cyanide Excel spreadsheet (Attachment D):

9.1.1 Sample ID

9.1.2 Soil/Solid samples only ***NOTE: Ext Vol and Sample Wt fields remain empty for aqueous samples.***

9.1.2.1 Ext Vol (ml) – record the end volume in ml in which a sample is distilled.

MASTER

9.1.2.2 Sample wt (g) – record the weight of sample distilled. (Typical weights of 1.0 g would be entered into the Excel spreadsheet.)

ESS Laboratory. This document may be reproduced solely for internal use.

9.1.3 %Solids – record percent solids of soil samples (100 for solids)

9.1.4 ml Colored – volume of distillate colored with reagents. If a dilution was necessary, then enter the volume of sample diluted to 25 ml.

9.1.5 Abs – absorbance reading of distillate.

9.1.6 Background Abs – not applicable for cyanide

9.1.7 QC ID –Used to designate the type of QC sample (if applicable). When these fields are filled, the spreadsheet will automatically extract the data from the analysis page into the QC page. The QC data will then be compared to the method control limits. If the QC data is outside control criteria, the data will be flagged with a "+". The following IDs are to be used:

9.1.7.1 S1 or S2 – used for CCV.
9.1.7.2 Smp, Dup, and Spk – used for sample, its duplicate, and the matrix spike (use Smp2, Dup2, and Spk2 for second duplicate set).
9.1.7.3 L1, L2, and/or L3 – used for Blank spike sample(s)

9.2 The following equation is used in the Excel spreadsheet to calculate Cyanide values:

$$\text{Conc. (mg/L)} = \frac{(y - m)}{b} \times DF$$

Where:

y= Sample absorbance
m = y-intercept of calibration curve
b = slope of calibration curve
DF = Dilution factor

9.3 Report only those values that fall between the lowest and the highest calibration standards. Samples exceeding the highest standard should be diluted and reanalyzed.

9.4 The difference between total cyanide in the chlorinated and unchlorinated samples is reported as the cyanide amenable to chlorination (if a negative value, then follow SM4500-CN-I).

10.0 QUALITY ASSURANCE/QUALITY CONTROL

10.1 All quality control data should be maintained and available for easy reference and inspection.

10.2 Initial and Periodic Method QC Demonstrations: The procedures specified in Section 10.2.1 through 10.2.2 must be conducted as an initial demonstration of laboratory capability, prior to the analysis of any samples. Subsequent to this initial demonstration, additional evaluations of this nature should be conducted on

ESS Laboratory. This document may be reproduced solely for internal use.

a periodic basis, in response to changes in instrumentation or operations, and/or in response to confirmed or suspected systems, method, or operational problems.

10.2.1 Precision and Accuracy (P&A): To demonstrate initial laboratory capability, analyze a minimum of four LCS. The mean concentration must be within ± 10 % of the stated values. P&A are performed for new analysts before sample analysis and annually to monitor competency.

10.2.2 Method Detection Limit: Analyze a minimum of seven replicate reagent water blanks which have been fortified with the analyte at 3 to 5 times the calculated or estimated Detection Limit. Distill and analyze each replicate according to the procedures described in Section 8.0. Calculate the MDL and MDL Check (LOD Verification) according to SOP 110_0013, at the frequency indicated in the SOP.

10.3 A new standard curve is generated quarterly or when there is a change in stock solutions. ***Mass 310 CMR 42 samples require that the standard curve be prepared daily***. Calibration curves must contain six standards and a blank.

10.4 Acceptable calibration curves must have $r > 0.995$.

10.5 Samples must be batched according to matrix. Soil and aqueous samples can not be run together. Each matrix must also have its own QC samples (method blank, LCSs, duplicate and spike samples).

10.6 Samples exceeding the highest standard should be diluted and re-analyzed

10.7 The ICV must be analyzed immediately following calibration to verify the validity of the primary standard.

10.7.1 The ICV recovery must be within the range of 90-110% (85-115% for MCP). Note: MCP also requires an ICB (cyanide concentration < MRL) immediately after the ICV.

10.7.2 If the ICV is outside of this range, a new calibration must be generated.

10.8 The CCB and CCVs must be analyzed at the beginning and end of each sample run, CCVs analyzed at two concentrations (see 8.2.4). The CCV is an undigested cyanide standard prepared from same source as the initial calibration and the CCB is undigested 0.25N NaOH solution. Note: MCP requires CCV concentration level to be near mid-point of curve.

10.8.1 The CCV recovery range must be within the range of 90-110% (85-115% for MCP).

10.8.2 If the CCV is invalid, re-make and re-analyze. If the second analysis is invalid, then a new curve must be generated.

MASTER

10.8.3 The CCB must be < ½ MRL (< MRL for MCP). If value is ≥ ½ MRL, color reagents are suspect and should be re-made. If this does not correct the problem, then prepare a new calibration curve.

10.9 Employ a minimum of one method blank per sample batch to determine if contamination or any memory effects are occurring. The method blank must contain all the reagents and in the same volumes as used in the processing of the samples. It must be carried through the complete procedure as the sample solution used for analysis.

10.9.1 The value for the blank should not exceed the one half the MRL (0.025 mg/L), (< MRL for MCP). If it does, then proceed to section 11.1.3 for corrective action.

10.10 Analyze one replicate sample for every other set of samples or per analytical batch, whichever is more frequent. See Addendum 3 for MCP requirements. Calculate the relative percent difference as follows:

$$RPD = \frac{D_1 - D_2}{(D_1 + D_2)/2} \times 100$$

Where: RPD = relative percent difference
D_1 = first sample value
D_2 = second sample value (replicate)

10.10.1 The control limit is ± 20% for RPD when the results are greater than four times the MRL. If the samples fall outside the control limit, see section 11.0 for corrective action. See Addendum 3 for MCP requirements (a solid SRM is required).

10.11 Analyze one spike sample for every other set of samples or per analytical batch, whichever is more frequent. See Addendum 3 for MCP requirements. Calculate the percent recovery as follows:

$$\% \text{ Recovery} = \frac{SSR - SR}{SA} \times 100$$

Where: SSR = Spiked Sample Result
SR = Sample Result
SA = Spike Added to Sample

10.11.1 The control limit is ± 25% for % Recovery when sample concentration is less than four times the amount of spike added (± 10% for Method 335.4). See Addendum 3 for MCP requirements. If the samples fall outside the control limit, see section 11.0 for corrective action.

10.12 Three Blank spikes (BS), one low (0.1 mg/L) and two high (0.4 mg/L) concentrations, must be analyzed with each analytical batch. See Addendum 3 for MCP BS requirements. Each BS should be prepared and analyzed in the same

ESS Laboratory. This document may be reproduced solely for internal use.

manner as the samples. Note: If the blank spikes are to be used to meet DOD criteria for Distilled ICV standards, then they must be run following the ICAL. See Addendum 5 for DOD QSM requirements.

10.12.1 The BS recovery range must be within the range of 90-110%. Relative percent difference (RPD) for the high level BS/BSD must be within 20%. See Addendum 3 for MCP requirements.

10.12.2 If the BS falls outside of this range, see section 11.0 for corrective action.

10.13 Any deviations from methodology or unusual observations will be noted in narrative that accompanies data.

10.14 Blank spikes will be plotted in Element.

10.15 The quantitation limit for this method is the lowest calibration standard 0.02 mg/L for aqueous samples and 1.0 mg/Kg for soil samples. The method reporting limit is the quantitation limit times the dilution factor, for soils this result is divided by %Solids/100. *NOTE: The quantitation limit of soils is based on 1 g of sample.*

10.16 If Connecticut DEP RCPs are required, refer to Addendum 4.

11.0 DATA VALIDATION

11.1 Data validation will be accomplished by reviewing all of the quality control parameters and assuring that they are within recommended ranges. Validation will be recorded on the Data Review Checklist, Attachment B. The only exceptions made to ranges would be the following:

11.1.1 For duplicates, the RPD should be ± 20%. However, there are cases where duplicates may not work. If this is the case, inform client in narrative concerning sample non-homogeneity.

11.1.2 For matrix spikes, the % Recovery should be ± 25% (± 10% for Method 335.4). If this is not met, check the BS. If the BS is within limits, matrix interferences are present and should be noted in the narrative.

11.1.3 Analytical batches with Method blanks above the ½ MRL will be re-prepped and re-analyzed with the following exceptions:

11.1.3.1 Samples that are that are at least twenty times higher than the method blank may be reported.

11.1.3.2 If the analyte is found in the method blank above the MRL but is not in any of the associated samples, no corrective action is needed.

MASTER

ESS Laboratory. This document may be reproduced solely for internal use.

11.1.3.3 Any results that are reported with method blank contamination must be B-flagged.

11.1.4 Analytical batches with blank spikes outside criteria will be re-prepped and re-analyzed with the following exception:

11.1.4.1 If blank spike is biased high for cyanide but is not in any of the associated samples, no corrective action is needed.

11.2 All unusual observations and method deviations will be noted in the narrative accompanying the data report presented to the client.

12.0 REFERENCES

12.1 U.S. Environmental Protection Agency, Methods for Chemical Analysis of Water and Wastes, EPA-600/4-79-020, Revised March 1983, Method 335.2.

12.2 U.S. Environmental Protection Agency, Methods for Chemical Analysis of Water and Wastes, EPA-600/R-93/100, REV 1.0, August 1993, Method 335.4, Revised March 1983, Method 335.2.

12.3 Standard Methods for the Examination of Water and Wastewater, 20th, 21st and 22nd Editions (1998 and 2012), Method 4500-CN C, E, G, I.

12.4 U.S. Environmental Protection Agency, Test Methods for Evaluating Solid Waste (SW-846), Total and Amenable Cyanide: Distillation. Method 9010B Third Edition, Update III.

12.5 U.S. Environmental Protection Agency, Test Methods for Evaluating Solid Waste (SW-846), Total and Amenable Cyanide: Method 9014 Third Edition, Update III.

12.6 U.S. Environmental Protection Agency, Test Methods for Evaluating Solid Waste (SW-846), Total and Amenable Cyanide (Automated Colorimetric, with off-line Distillation). Method 9012B Revision 2, November 2004.

12.7 U.S. Environmental Protection Agency, Test Methods for Evaluating Solid Waste (SW-846), Titrimetric and Manual Spectrophotometric Determinative Methods for Cyanide. Method 9014 Third Edition, Update IV.

12.8 MCP WSC-CAM VIA Analysis of Total Cyanide and Physiologically Available Cyanide (PAC) Protocol, July 1st, 2010, Revision No.1

12.9 Connecticut DEP Recommended Reasonable Confidence Protocols, Version 2.0, July 2006.

12.10 Deleted.

13.0 POLLUTION PREVENTION and WASTE MANAGEMENT

MASTER

13.1 ESS Laboratory's policies and pollution prevention and waste management is covered in SOP 90_0002, Hazardous Waste Contingency and Emergency Response Plan. All employees are trained in the requirements of the SOP.

14.0 DEFINITIONS

14.1 Refer to TNI 2009 Standard, Module 2, Section 3 - Terms & Definitions, located in Network Directory Folders Q:\Lab\NELAC Standards.

15.0 METHOD PERFORMANCE

15.1 Precision and Accuracy data must be generated by all employees before performing this analysis on client samples. The data is generated by analyzing a method blank and four blank spike samples. Acceptance criteria are 90-110% Recovery and %RSD of $\leq$ 20%.

15.2 The precision and accuracy data in Table 1 were developed using a reagent water matrix. Values are in mg/L.

16.0 TABLES, DIAGRAMS, FLOWCHARTS, AND VALIDATION DATA

Table 1. Typical Precision and Accuracy data generate

Analyte	Date	True value	Average	%Recovery	%RSD
Cyanide	8/24/04	0.4	0.369	92	2.6

17.0 PERSONNEL QUALIFICATIONS

17.1 Analysts who perform this analysis must have a working knowledge of quantitative and qualitative analysis, instrumental methods of analysis, chemical laboratory methods, and equipment.

17.2 All analysts, before performing any analysis, participate in the ESS Laboratory training program (SOP 80_0016). The training process consists of reading the Standard Operating Procedure, gaining instruction on the procedure from an experienced analyst, and performing the initial demonstration of capability.

18.0 TROUBLESHOOTING

18.1 Refer to Sections 8, 10 and manufacturer's instructions.
18.2 See laboratory supervisor or operations manager for all other maintenance problems.
18.3 Record all maintenance in the instrument's maintenance logbook.

19.0 DATA MANAGEMENT AND RECORDS

19.1 ESS Laboratory's utilizes the Promium Element LIMS system as part of its data

MASTER

management system, per SOP 70.0007. The specific retention periods required in the NELAC Standard, EPA-CFR and state and local statutes are followed or exceeded.

20.0 ATTACHMENTS

20.1 Attachment A – Cyanide Analysis Logbook

20.2 Attachment B – Deleted

20.3 Attachment C – Standardization of Cyanide

20.4 Attachment D – Linear Regression Spreadsheet

20.5 Addendum 1 – Low Level Cyanide

20.6 Addendum 2 – Lachat Reagents, Standards and Flow Diagram

20.7 Addendum 3 – MCP WSC-CAM-VIA

20.8 Addendum 4 – Connecticut DEP RCPs

MASTER

ESS Laboratory. This document may be reproduced solely for internal use.

Attachment A

ESS Laboratory
Cyanide Logbook

LabNumber	#	KI Y/N	Pb Ac Y/N	pH	Analysis	Prepared	PreparedBy	Initial	Final	Source	SpikeID1	SpikeAmt1	Comments

Units: Initial=g or mL, Final=mL, SpikeAmt1=uL

Sulfamic acid:	5K18113	Phosphate buffer:	6A30075
18N H2SO4:	5K07084	Pyr.-Barb. Acid:	6A30076
MgCl2 soln:	6B16205	Chloramine T:	
0.25N NaOH:	6B18071		

Control Number: 40.0015

Attachment A

ESS Laboratory
Cyanide Analysis Logbook
Total Cyanide 4500CN CE

Analyst: __________

Date Analyzed: __________

DF based on Final Volume of: 25 mL

Sample ID	mL Colored	DF*	Abs	Bkgrd Abs	Concentration	Initial Result	Initial Units	Initial MRL

ESS LABORATORY
STANDARDIZATION OF CYANIDE

Reagents:

1) Indicator solution -ID#:_____

2) Standard silver nitrate titrant: Commercially purchased.

Lot #:_____
Expiration
Date:_____

3) Sodium hydroxide dilution solution -
ID#:_____

4) Stock cyanide
solution:

Conc. (ppm):_____

ID#:_____

Procedure: Use 0.5 mL of indicator. Titrate to first change in color from a canary yellow to a salmon hue. Titrate a blank containing same amount of NaOH as CN std to practice.

TITRATION:

Date:	Standard ID	Volume (ml)	N AgNO3	Buret Readings			Conc (mg/L)
				Init. Vol.	Final Vol.	T. Vol.	

mg / L CN = $\frac{(A - B) * 1000}{\text{mL of std}}$

Where: **A = ml titrant used for standard**
B = ml titrant used for blank

Notes: **1 ml of 0.0192N $AgNO_3$ = 1 mg CN^-**

Acceptance criterion: **100 ppm cyanide solution 97.5 - 102.5**
1000 ppm cyanide solution 975 - 1025

MASTER
Control # 40.0024-0301A

Analyst/Date:_____

Rvwd by:_____

Linear Regression Spreadsheet

ATTACHMENT D

Analysis: **Total Cyanide 4500CN CE**

Analysis Date:

	Conc. (mg/L)	Abs
Blank	0	0.004
Standard1	0.02	0.032
Standard2	0.1	0.153
Standard3	0.2	0.303
Standard4	0.3	0.451
Standard5	0.4	0.599
Standard6	0.5	0.748

Calibration Curve information:

Cal Date:	3/15/16
Slope:	1.48942
Y-intercept:	0.0037
R^2:	1.0000

Cal Std ID	6C15067
CCV Conc.mg/L	0.4
2nd Source ID:	6C15076
2nd Source Abs:	0.595
Conc (mg/L):	0.4
Result (mg/L)	0.397
%Recovery:	99

Batch QC Criteria:
Blk< 0.05 mg/L CCV/ICV:90-110% LCS:90-110% Dup:+/-20% Spk:+/-25%

Sample	True Value (mg/L)	Result (mg/L)	% Rec
CCV1 -**(S1)**	0.1		
CCV2 -**(S2)**	0.4		
CCV3 -**(S3)**	0.1		
CCV4 -**(S4)**	0.4		

Low Level Cyanide

SOP(s) Modified: TOTAL & AMENABLE CYANIDE BY DISTILLATION

Modification Objective: This addendum addresses any modifications to standard operating procedure 40_0009 needed to analyze aqueous samples down to an MRL of 0.005 mg/L.

Specific SOP Modifications: Low level cyanide analysis includes the following changes:

- **Equipment/Apparatus**:
  - 5cm cuvette is use for all standards and samples.
- **Standards**
  - **Low level blank spike (0.02 mg/L)**: Into a specimen cup pipette 0.2 ml of secondary working standard cyanide solution. Dilute to 50 ml with 0.25 N NaOH. ***Prepare fresh daily.***
  - **High level blank spike (0.08 mg/L)**: Into a specimen cup pipette 0.8 ml of secondary working standard cyanide solution. Dilute to 50 ml with 0.25 N NaOH. Two high level blank spikes must be analyzed with each analytical batch to satisfy MA MCP requirements. ***Prepare fresh daily.***
  - **Matrix spike (0.04 mg/L)**: To a separate aliquot of sample placed in the distillation tube, pipette 0.4 ml of secondary working standard cyanide solution into the tube. This is equivalent to 0.04 mg/L of CN^- spiked into 50 ml of sample.
- **Preparation of the standard curve**: A new curve, consisting of a blank and six standards, is generated quarterly or when a new primary stock solution is prepared. *When analyzing samples per DoD QSM, current version, the calibration curve* ***must be prepared daily***. The primary working cyanide standard is used to prepare all calibration standards. The calibration curve standards are diluted to volume with 0.25N Sodium Hydroxide; this insures that the standards have the same salt concentration as the standard.

Volume of Standard (ml)	Final Volume (ml)	Final Conc. (mg/L)
0	50	0
0.05	50	0.005
0.2	50	0.02 – CCV
0.4	50	0.04
0.6	50	0.06
0.8	50	0.08 - CCV
1.00	50	0.10

WITHDRAWN

7. REAGENTS AND STANDARDS

7.1. Preparation of Reagents

Use deionized water (ASTM-Type 1) for all solutions.

Degassing with helium:

To prevent bubble formation, degas all solutions except the standards with helium. Use He at 140 kPa (20 lb/in^2) through a helium degassing tube (Lachat part number 50100). Bubble He vigorously through the solution for one minute.

Reagent 1. Carrier, 0.25 M Sodium Hydroxide

In a 1 L plastic container dissolve **10.0 g NaOH** in **1.00 L** or **1.00 kg** water.

Reagent 2. Phosphate Buffer, 0.71 M

By Volume: In a 1 L volumetric flask, dissolve **97 g potassium phosphate, monobasic, anhydrous,** (KH_2PO_4) in approximately **800 mL of water.** Dilute to the mark and invert to mix. Prepare fresh monthly.

By Weight: To a 1 L tared container add **97 g potassium phosphate, monobasic, anhydrous,** (KH_2PO_4) and **975 g water.** Stir or shake until dissolved. Prepare fresh monthly.

Reagent 3. Chloramine-T

Dissolve **2.0 g chloramine-T hydrate** in **500** or **500 g water.** Prepare fresh daily.

Reagent 4. Pyridine-Barbituric Acid Reagent

By Volume: In the fume hood, place **15.0 g barbituric acid** in a 1 L beaker and add **100 mL water,** rinsing down the sides of the beaker to wet the barbituric acid. Add **75 mL pyridine** (C_5H_5N) while stirring and mix until the barbituric acid dissolves. Add **15 mL concentrated hydrochloric acid** (12 M HCl) and mix. Transfer to a 1 L volumetric flask, dilute to the mark, and invert to mix. Prepare fresh weekly.

By Weight: In the fume hood, place **15.0 g barbituric acid** in a tared 1 L container and add **100 g water,** rinsing down the sides of the beaker to wet the barbituric acid. Add **73 g pyridine** (C_5H_5N) with stirring and mix until the barbituric acid dissolves. Add **18 g concentrated hydrochloric acid (12 M HCl),** then add an additional **825 g water** and mix. Prepare fresh weekly.

17. TABLE, DIAGRAMS, FLOWCHARTS, AND VALIDATION DATA

17.1. CYANIDE MANIFOLD DIAGRAM

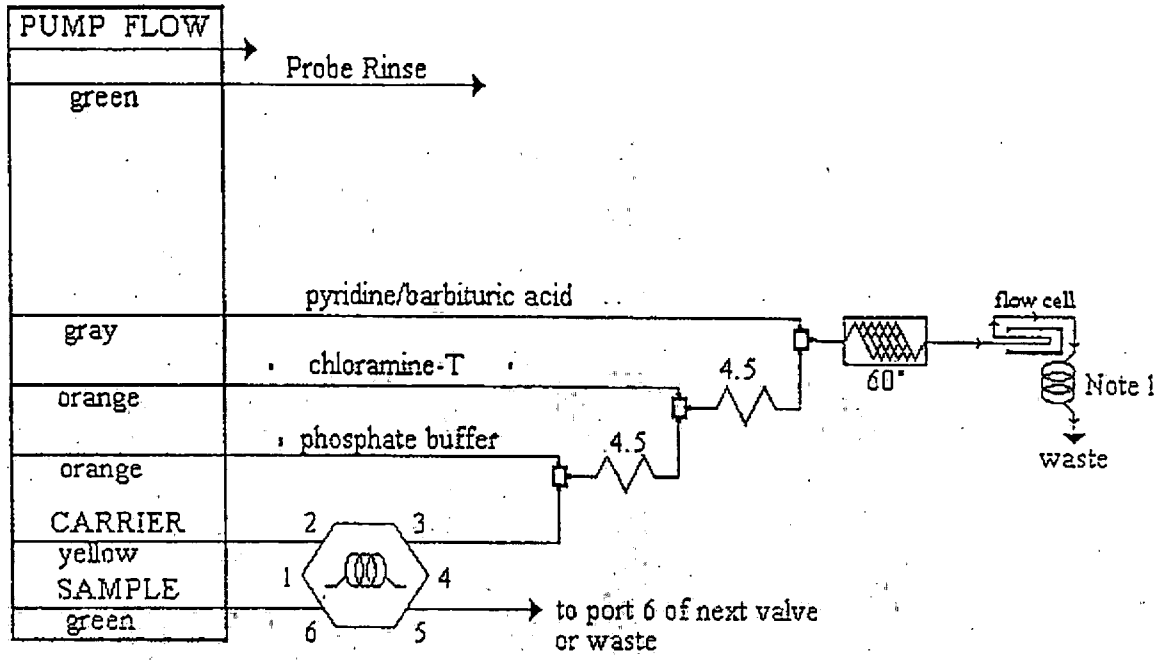

Sample loop = 150 cm x 0.8 mm i.d.
QC8000 Sample loop = 150 cm x 0.8 mm i.d.

Interference Filter = 570 nm

CARRIER is 0.25 M sodium hydroxide solution (Reagent 1).

All manifold tubing is 0.8 mm (0.030 in) i.d. This is 5.2 uL/cm.

4.5 is 70 cm of tubing on a 4.5 cm coil support

APPARATUS: An injection valve, a 10 mm path length flow cell, and a colorimetric detector module are required. The shows 650 cm of tubing wrapped around the heater block at the specified temperature.

Note 1: 2 meter back pressure loop, 0.52 mm i.d.

17.2. DATA SYSTEM PARAMETERS FOR QUIKCHEM AE

Sample throughput:	80 samples/h, 45 s/sample
Pump speed:	35
Cycle Period:	45
Inject to Start of Peak Period:	24
Top Scale Response:	0.50 abs
Bottom Scale Response:	0.00 abs
Segment/Boundaries:	A- 0.500 mg CN^-/L
	E- 0.005 mg CN^-/L
	F- 0.000 mg CN^-/L

ADDENDUM 3

WSC – CAM – VI A

Quality Control Requirements and Performance Standards for the **Analysis of Total Cyanide and Physiologically Available Cyanide (PAC)** in Support of Response Actions under the Massachusetts Contingency Plan (MCP)

MASTER

VI. Miscellaneous Wet Chemical Methods

A. Quality Control Requirements and Performance Standards for WSC-CAM-VI A (Total Cyanide and Physiologically Available Cyanide)

Table of Contents

	Acronym List	3
1.0	Quality Control Requirements and Performance Standards for WSC-CAM-VI A	4
	1.1 Overview of WSC-CAM-VI A	4
	1.2 Summary of Cyanide Methods	6
	1.3 Sample Distillation/Preparation Methods for WSC-CAM-VI A	7
	1.4 Method Interferences	7
	1.5 Quality Control Requirements for WSC-CAM-VI A	8
	1.6 Special Analytical Considerations for WSC-CAM-VI A	9
	1.7 Analyte List for WSC-CAM-VI A	10
2.0	Data Usability Assessment	18
3.0	Reporting Requirements for WSC-CAM-VI A	18
	3.1 General Reporting Requirements for WSC-CAM-VI A	18
	3.2 Specific Reporting Requirements for WSC-CAM-VI A	18

List of Tables and Appendices

Table VI A-1	Specific QC Requirements and Performance Standards for WSC-CAM-VI A	11-17
Table VI A-2	Routine Reporting Requirements for WSC-CAM-VI A	19
Appendix VI A-1	Sample Collection, Preservation and Handling Procedures for Total Cyanide and PAC Analyses	20-21
Appendix VI A-2	Data Deliverable Requirements for Data Audits	22-23
Appendix VI A-3	Analysis Sequence for Cyanide by WSC-CAM-VI A	24
Appendix VI A-4	Method for the Determination of Physiologically Available Cyanide	25-33

WINSTEP

ACRONYM LIST

CAM	Compendium of Analytical Methods
CASN	Chemical Abstracts Service Number
CCB	Continuing calibration blank
CCV	Continuing calibration verification
CN	Cyanide
CN^-	Cyanide ion (Free Cyanide)
CNCl	Cyanogen chloride
HCl	Hydrochloric acid
HCN	Hydrocyanic acid
HNO_3	Nitric acid
LLCV	Low-level calibration verification
ICB	Initial calibration blank
ICV	Initial calibration verification
IDP	Initial demonstration of proficiency
IRAs	Immediate Response Actions
LCS/LCSD	Laboratory control sample / Laboratory control sample duplicate
LR	Linear range
MassDEP	Massachusetts Department of Environmental Protection
MB	Method blank
MCP	Massachusetts Contingency Plan
MD	Matrix duplicate
MDL	Method detection limit
MS	Matrix spike
MOHML	Massachusetts Oil and Hazardous Materials List
NaOH	Sodium hydroxide
PAC	Physiologically Available Cyanide
%D	Percent difference
%R	Percent recovery
r	Correlation coefficient
RAO	Response Action Outcome
RCs	Reportable Concentrations
RL	Reporting limit
RPD	Relative percent difference
RQs	Reportable Quantities
QA	Quality assurance
QC	Quality control

UNITS:

g	Gram
mg	Milligram
mg/L	Milligram per liter
mg/Kg	Milligram per kilogram
mL	Milliliter
nm	nanometer
µg/L	Microgram per liter
µm	Micrometer

1.0 Quality Control Requirements and Performance Standards for WSC-CAM-VI A

1.1 Overview of WSC-CAM-VI A

WSC-CAM-VI A, *Quality Control Requirements and Performance Standards for the Analysis of Total Cyanide and Physiologically Available Cyanide (PAC) in Support of Response Actions under the Massachusetts Contingency Plan (MCP)*, is a component of MassDEP's Compendium of Analytical Methods (CAM). Effective July 1, 2010, this revised CAM protocol, WSC-CAM-VI A, replaces the original Cyanide CAM document, WSC-CAM-VI A (effective date, August 13, 2004). Refer to WSC-CAM-I A for an overview of the CAM process. Please note that while this protocol must be followed on and after the effective date of July 1, 2010 for the purpose of "Presumptive Certainty," the revised protocol may be used optionally prior to its effective date upon its publication on April 15, 2010.

This document provides Quality Control (QC) requirements and performance standards to be used in conjunction with the required analytical methods SW-846 9014 (manual colorimetric using UV spectrometry), SW-846 9012B (automated colorimetric using UV spectrometry), or Standard Method 4500-CN^- (manual colorimetric using UV spectrometry; *Standard Methods for the Examination of Water and Wastewater*, Part 4000, 20th Edition), for the analysis of aqueous and solid samples for Total Cyanide and Physiologically Available Cyanide (PAC). The QC requirements and performance standards specified in this document in Table VI A-1 together with the analytical procedures described in the referenced methods constitute the WSC-CAM-VI A protocol. All protocols included in the CAM are considered "methods" published by the MassDEP pursuant to the provisions of 310 CMR 40.0017(2). Use of EPA SW-846 9014, 9012B, or Standard Method 4500-CN^- is a "Presumptive Certainty" requirement of WSC-CAM-VI A. Sample preservation, container and analytical holding time specifications for aqueous, soil, and sediment matrices for Cyanide analyzed in support of MCP decision-making are presented in Appendix VI A-1 of this document and Appendix VII-A of WSC-CAM-VII A *Quality Assurance and Quality Control Guidelines for the Acquisition and Reporting of Analytical Data in Support of Response Actions Conducted Under the Massachusetts Contingency Plan (MCP)*. Data reporting requirements are also provided in WSC-CAM-VII A.

Overall usability of data produced using this CAM protocol should be evaluated for compliance with project-specific data quality objectives, regardless of "Presumptive Certainty" status. For more guidance on data usability, refer to MassDEP Policy #WSC-07-350, *MCP Representativeness Evaluations and Data Usability Assessments.*

1.1.1 Reporting Limits for Cyanide by WSC-CAM-VI A

The reporting limit (RL) for Cyanide using WSC-CAM-VI A is dependent on the concentration of the lowest non-zero standard in the initial calibration or the low-level calibration verification (LLCV), analyzed under identical conditions as the sample, with adjustments made for the sample size, preparation factors, percent solids, dilution factors, etc., as required. The CAM RLs for Cyanide using the WSC-CAM-VI A protocol are:

- 0.005-0.010 mg/L for aqueous samples (surface water, groundwater, and drinking water); and
- 1.0 mg/Kg for soil/sediment samples (assuming 100% solids).

For "Presumptive Certainty" purposes, if the typical CAM RLs are not achieved, respond "NO" to Question G of the "MassDEP MCP Analytical Protocol Certification Form" and address the CAM RL exceedance in the laboratory narrative.

Reporting limits lower than the above-referenced CAM RLs for Cyanide may be required to satisfy project requirements. The RL (based on the concentration of the lowest calibration standard or the LLCV) for Cyanide must be less than or equal to the MCP standards or criteria that the contaminant concentrations are being compared to (e.g., Method 1 Standards, benchmark values, background, etc.). Meeting MCP standards or criteria may require analytical modifications to improve sensitivity. All such modifications must be described in the laboratory narrative.

1.1.2 Initial Demonstration of Proficiency for WSC-CAM-VI A

Each laboratory that uses the WSC-CAM-VI A protocol is required to operate a formal quality assurance program. The minimum requirements of this program consist of an initial demonstration of laboratory proficiency, ongoing analysis of standards and blanks to confirm acceptable continuing performance, the preparation/analysis of laboratory control samples (LCS) and/or matrix spikes (MS) to assess accuracy and LCS duplicates or matrix duplicates (MD) to assess precision.

Laboratories must document and have on file an Initial Demonstration of Proficiency for each combination of sample preparation and determinative method being used. These data must meet or exceed the performance standards as presented in Table VI A-1 of this protocol. General requirements for performing the Initial Demonstration of Proficiency can be found in SW-846 Chapter One and Section 8 of SW-846 Methods 9010C, 9012B, and 9014. The procedure in Section 8.6 of SW-846 Method 9010C must be followed. The data associated with the Initial Demonstration of Proficiency must be kept on file at the laboratory and made available to potential data users on request. The data associated with the Initial Demonstration of Proficiency for WSC-CAM-VI A must include the following:

QC Element	Performance Criteria
Initial Calibration	See WSC-CAM-VI A, Table VI A-1, for Performance Criteria
Continuing Calibration	
Method Blanks	
Percent Recovery for Total CN: LCS & MS PAC: LCS-P, LCS-N, & MS	
Relative Percent Difference (RPD) for Total CN: LCS Duplicate (LCSD) or MD PAC: LCSD-P, LCSD-N or MD	
High Concentration Distilled Standard	±10% of true value
Low Concentration Distilled Standard	

Laboratories are encouraged to actively monitor pertinent QC performance standards described in Table VI A-1 to assess analytical trends (i.e., systematic bias, etc) and improve overall method performance by preempting potential non-conformances.

For the WSC-CAM-VI A protocol, laboratory-specific control limits must meet or exceed (demonstrate less variability than) the performance standards for each QC element listed in Table VI A-1. It should be noted that the performance standards listed in Table VI A-1 are based on multiple-laboratory data, which are in most cases expected to demonstrate more variability than performance standards developed by a single laboratory.

This protocol is restricted to use by, or under the supervision of, analysts who are experienced in using colorimetric UV spectrometry as a quantitative tool for environmental analyses and knowledgeable in the minimization of interferences described in this method.

1.2 Summary of Cyanide Methods

The following determinative methods may be used for analysis of Total Cyanide or PAC in solution/distillates with WSC-CAM-VI A:

- SW-846 Method 9014 – manual colorimetric UV spectrometry for the determination of free (non-complexed) Cyanide (CN^-) and hydrocyanic acid (HCN) in solution/distillates.
  - This method also includes titrimetric determination; however, the sensitivity of the titrimetric method may not meet data quality objectives (see Section 1.6 of this WSC-CAM-VI A protocol for further information)
- SW-846 Method 9012B – automated colorimetric UV spectrometry for the determination of free CN^- and HCN in solution/distillates
- Standard Method 4500-CN^- – includes colorimetric (equivalent to SW-846 Method 9014), titrimetric, and potentiometric procedures for the determination of HCN in distillates

The definitions of different Cyanide species are defined as follows.

- Total Cyanide includes Free Cyanide plus nitriles (organic cyanides), other simple cyanides such as cyanide salts, and stable metallo-cyanide complexes including iron-cyanides. Total Cyanide is defined as the sum of cyanides, as hydrocyanic acid (HCN), released during the aggressive catalytic, mineral acid reflux distillation procedure described in SW-846 Method 9010C.

- Free Cyanide (non-complexed) is defined as the sum of cyanide, as hydrocyanic acid (HCN), and cyanide ion (CN^-). Free Cyanide may be determined directly using SW-846 Method 9213 without reflux distillation. Alternatively, SW-846 Method 9213 can be used to measure free cyanide in distillates, with higher RLs than SW-846 Method 9014 (see Section 1.6 of this WSC-CAM-VI A protocol for further details).

- Physiologically Available Cyanide (PAC) as determined by the MassDEP PAC protocol, includes biologically available cyanides that are released during this modified distillation including free cyanide, simple cyanide salts, and some metal-cyanide complexes that are easily dissociated. This protocol will **not** release iron-cyanide complexes from samples.

Cyanides are released from samples using reflux-distillation (see Section 1.3 below), which results in HCN in the distillate. The distillate is treated with chloramine-T at pH ≤8 to convert the HCN into cyanogen chloride (CNCl) and color is formed by adding pyridine-barbituric acid. Quantitation of Cyanide in the treated distillates is based on the color absorption at 578-nm wavelength using a UV spectrometer.

Absorbance (peak height) is measured as a function of Cyanide concentration, based on a multi-level calibration curve.

Prior to analysis, the aqueous and solid (soil/sediment) samples must be prepared and distilled according to the procedures described in Section 1.3 below.

1.3 Sample Distillation/Preparation Methods for WSC-CAM-VI A

The aggressiveness of the sample digestion associated with the preparation method selected determines the range of cyanide salts and insoluble cyanide complexes that will ultimately be decomposed and captured in the absorber solution and detected by the selected determinative method. Total Cyanide prepared using SW-846 Method 9010C is the most aggressive preparation procedure (measuring almost all cyanide forms), while the MassDEP PAC Protocol, simulating the human digestive system, is the least aggressive preparation procedure (measuring only simple cyanides and excluding iron-cyanide complexes).

Samples for analysis by WSC-CAM-VI A must be prepared/distilled using one of the following methods.

Preparation / Distillation Method	Matrix	Description
SW-846 9010C	Aqueous/Leachate/Waste	*Total and Amenable Cyanide: Distillation* Reflux-distillation for acidic extraction of all forms of Cyanide for Total Cyanide in distillate (as HCN). Macro and Micro-distillation procedures are allowed by modifying reagent volumes.
MassDEP PAC Protocol	Aqueous/Soil/Sediment/Waste	*MassDEP Physiologically Available Cyanide (PAC) Protocol* Reflux-distillation for mildly-acidic extraction of free CN, simple CN salts and other biologically available cyanides for PAC in distillate (as HCN). The PAC protocol does not extract iron-cyanide complexes ("Prussian Blue"). Macro and Micro-distillation procedures are allowed by modifying reagent volumes.
Standard Method 4500-CN^- C	Aqueous/Soil/Sediment/Waste	*Total Cyanide After Distillation* Reflux-distillation for acidic extraction of all forms of CN for Total CN in distillate (as HCN). This method is equivalent to SW-846 Method 9010C.
SW-846 9013	Solids and Oily Waste	*Cyanide Extraction Procedure for Solids and Oils* Sample is first extracted with water at pH ≥10 and then distilled using SW-846 Method 9010C.

1.4 Method Interferences

Refer to Section 3.0 of SW-846 Method 9010C and Standard Method 4500-CN^- for further information on method interferences. Many potential interferences are eliminated in the acidic reflux-distillation procedure used for Total Cyanide (SW-846 Method 9010C and Standard Method 4500-CN^- C). Several common interferences and corrective measures are summarized as follows.

- Oxidizing agents such as chlorine decompose most cyanide compounds and complexes. Chlorine interferences can be removed by adding an excess of ascorbic acid or sodium arsenite to aqueous samples prior to preservation and storage to reduce the chlorine (Cl_2) to non-interfering chloride (Cl^-).
- Sulfide interference can be removed by adding an excess of bismuth nitrate to the samples (to precipitate the sulfide) before distillation. Samples that contain hydrogen sulfide, metal sulfides, or other compounds that may produce hydrogen sulfide during the distillation should be treated by the addition of bismuth nitrate.
- Positive interferences for cyanide (high bias results) may be obtained for samples that contain nitrate and/or nitrite at concentrations exceeding 10 mg/L. During the distillation, nitrate and nitrite will form nitrous acid, which will react with some organic compounds to form oximes. These compounds will decompose under test conditions to generate hydrocyanic acid (HCN). The possibility of interference by nitrate and nitrite is eliminated by pretreatment with sulfamic acid just before distillation.
- Fatty acids, detergents, surfactants, and other compounds may cause foaming during the distillation when they are present in high concentrations. Refer to Section 6.7 of Method SW-846 9010C for an extraction procedure to eliminate this interference.
- Samples containing solids of an amount and/or size as to interfere with agitation and homogenization of the sample mixture in the distillation flask, or so much oil or grease as to interfere with the formation of a homogeneous emulsion may be extracted with water (and hexane if heavy grease is present) at pH 10 or greater to minimize this potential interference as described in SW-846 Method 9013, *Cyanide Extraction Procedure for Solids and Oils.*

1.5 Quality Control Requirements for WSC-CAM-VI A

1.5.1 General QC Requirements

For general quality control procedures for all inorganic methods, including SW-846 Methods 9012B and 9014, refer to SW-846 Chapter One. General QC procedures to evaluate the instrument's operation can also be found in SW-846 Chapter One, Section 2.0, and include evaluation of calibrations and performance of sample analyses.

1.5.2 Specific QC Requirements and Performance Standards for WSC-CAM-VI A.

Specific QC requirements and performance standards for Cyanide using the WSC-CAM-VI A protocol are presented in Table VI A-1. Refer to WSC-CAM-VII A for field QC requirements. ***Note that a project-specific matrix spike (MS) must be performed for total Cyanide and PAC to evaluate accuracy in a solid matrix (soil/sediment) at a frequency of one per 20 samples per matrix.*** Strict compliance with the QC requirements and performance standards, as well as satisfying the CAM's other analytical and reporting requirements will provide a data user with "Presumptive Certainty" in support of Response Actions under the MCP. The concept of "Presumptive Certainty" is explained in detail in Section 2.0 of WSC-CAM-VII A.

While optional, parties electing to utilize these protocols will be assured of "Presumptive Certainty" of data acceptance by agency reviewers. In order to achieve "Presumptive Certainty" for analytical data, parties must:

(a) Use the analytical method specified for the selected CAM protocol;

(b) Incorporate **all** required analytical QC elements specified for the selected CAM protocol;
(c) Implement, as necessary, required corrective actions and analytical response actions for **all** non-conforming analytical performance standards;
(d) Evaluate and narrate, as necessary, **all** identified CAM protocol non-compliances; and
(e) Comply with **all** the reporting requirements specified in WSC-CAM-VII A, including retention of reported and unreported analytical data and information for a period of ten (10) years.

In achieving "Presumptive Certainty" status, parties will be assured that analytical data sets:

- ✓ Satisfy the broad QA/QC requirements of 310 CMR 40.0017 and 40.0191 regarding the scientific defensibility, precision and accuracy, and reporting of analytical data; and

- ✓ May be used in a data usability and representativeness assessment, as required in 310 CMR 40.1056(2)(k) for Response Action Outcome (RAO) submittals, consistent with the guidance described in MassDEP Policy #WSC-07-350, *MCP Representativeness Evaluations and Data Usability Assessments*.

1.6 Special Analytical Considerations for WSC-CAM-VI A

- Matrix Spike (MS) Recovery – ***A MS is required for WSC-CAM-VI A for Total Cyanide and PAC in solid matrices (soil/sediment) at a frequency of one per 20 samples per matrix.*** Consistent with USEPA Region I data validation guidance, MassDEP requires rejection of non-detected metals results with <30% recovery in the MS. If the MS recovery is <30% and non-detected results were found, the laboratory must follow the required corrective actions listed on Table VI A-1.
  - Laboratories are not required to monitor whether or not matrix spikes are performed on soil/sediment samples at a frequency of one per 20 samples per matrix. This is the responsibility of the data user.
  - For "Presumptive Certainty" purposes, if the data user does not submit a soil/sediment sample for MS analysis, Question H of the "MassDEP MCP Analytical Protocol Certification Form" must be answered NO and this must be noted in the laboratory narrative.
- RLs, sensitivity, and/or the optimum linear concentration range can vary with the cyanide compound or complex, sample matrix and laboratory operating conditions.
- Ion-selective electrode analysis by SW-846 Method 9213 or the titrimetric analysis by SW-846 Method 9014 may be used in place of the colorimetric spectrometry method for samples with high levels of Cyanide (>0.01 mg/L for SW-846 Method 9213 and >0.1 mg/L for SW-846 Method 9014). Data users should note that these analytical methods are not sensitive enough to meet the lowest MCP Method 1 Cleanup Standards for Cyanide.
- The RCRA-defined "reactive" cyanide content of a waste (the cyanide content that could generate toxic fumes when exposed to mild acidic conditions) is not determined by this WSC-CAM-VI A protocol. Refer to Chapter Seven of SW-846 for additional information on reactive cyanide.
- For the colorimetric method of analysis (SW-846 9014 and Standard Method 4500-CN), it is important to have the same reagent concentrations in both the sample and the standards to obtain colors of comparable intensity.
- Some cyanide complexes, such as Potassium Ferricyanide, K_3 [Fe-$(CN)_6$], may be susceptible to photodegradation when exposed to fluorescent lighting or sunlight during sample handling

and/or analysis. This photodegradation can change the type of the cyanide compounds in the sample, which is critical for the PAC method (such a change will not affect Total CN measurements). Therefore, if PAC is being measured, due caution must be exercised to limit the exposure of the sample to light to maintain the integrity of sample from collection through analysis.

1.7 Analyte List for WSC-CAM-VI A

The MCP analyte list for WSC-CAM-VI A consists of Cyanide, CASN 57-12-5, as measured in distillates for either Total Cyanide or PAC.

It is the responsibility of the data user, in concert with the laboratory, to establish the range and required RL for the target analytes. Sources of various MassDEP standards and criteria are as follows:

- Reportable Quantities (RQs) and Concentrations (RCs) as described in 310 CMR 40.1600, The Massachusetts Oil and Hazardous Materials List (MOHML), in Subpart P of the MCP may be found at the following URL: http://www.mass.gov/dep/cleanup/laws/regulati.htm#mcp
- An online searchable Oil & Hazardous Materials List of RQs and RCs values may be found at the following URL: http://public.dep.state.ma.us/momhl/hazmat.aspx.
- An updated list of MCP Method 1 Standards may be found at the following URL: http://www.mass.gov/dep/cleanup/laws/standard.htm

Cyanide, expressed as Physiologically Available Cyanide (PAC), has promulgated MCP Method 1 groundwater/soil standards. In the absence of PAC data, the MCP standards are applicable to Total Cyanide.

Table VI A-1: Specific QC Requirements and Performance Standards for Total Cyanide and PAC using WSC-CAM VI A

Required QC Parameter	Data Quality Objective	Required Performance Standard	Required Deliverable?	Rejection Criteria per WSC-07-350	Required Corrective Action	Required Analytical Response Action
Initial Demonstration of Proficiency (IDP)	Laboratory Analytical Accuracy & Precision	(1) Must be performed prior to using method on samples. (2) Must be performed for each matrix. (3) Must follow procedure in Section 8.6 of SW-846 9010C and the requirements in Section 1.1.2 of this protocol.	No	NA	Refer to Section 8.6 of SW-846 9010C and Section 1.1.2 of this protocol.	NA
Preparation of Samples	Accuracy and Representativeness	(1) For Total Cyanide and PAC, all aqueous and solid samples must be distilled/prepared prior to analysis. See SW-846 9010C, 9013, Standard Method 4500-CN, and MassDEP PAC Protocol (Appendix VI A-4) for appropriate reflux distillation procedures.	No	NA	NA	NA
Initial Calibration	Laboratory Analytical Accuracy	(1) Frequency: Daily prior to sample analysis, when daily calibration QC samples (LLCV, CCV, CCB) are not in control, or when major instrument maintenance is performed. (2) Initial Calibration: minimum of a calibration blank plus five un-distilled KCN calibration standards. (3) Low-level standard in calibration must be at or below the RL. High level standard in calibration defines the upper end of the linear calibration range. (4) Linear regression with correlation coefficient $r \geq 0.995$. (5) If titration procedure is used, the silver nitrate solution must be standardized as described in "Standard Methods for the Examination of Water and Wastewater," Method 4500-CN D.	No	NA	Perform instrument maintenance as necessary; recalibrate as required by method.	Suspend all analyses until initial calibration meets criteria.

Table VI A-1: Specific QC Requirements and Performance Standards for Total Cyanide and PAC using WSC-CAM VI A

Required QC Parameter	Data Quality Objective	Required Performance Standard	Required Deliverable?	Rejection Criteria per WSC-07-350[1]	Required Corrective Action	Required Analytical Response Action
Initial Calibration Verification (ICV)	Laboratory Analytical Accuracy	(1) Frequency – immediately after each initial calibration. (2) Prepared using standard source different than used for initial calibration (un-distilled). (3) Concentration level near midpoint of curve. (4) Percent recovery must be 85-115%.	No	NA	(1) Reanalyze ICV; if acceptable, no further action required. (2) If reanalysis is still outside of criteria, recalibrate and reanalyze ICV.	Suspend all analyses until ICV meets criteria.
Initial Calibration Blank (ICB)	Laboratory Analytical Sensitivity (instrument drift & contamination)	(1) Frequency: immediately after ICV. (2) Un-distilled. (3) Cyanide must be <RL.	No	NA	(1) Reanalyze ICB; if acceptable, no further action required. (2) If reanalysis is still outside of criteria, recalibrate and reanalyze ICV & ICB.	Suspend all analyses until ICB meets criteria.
Low-Level Calibration Verification (LLCV)	Laboratory Analytical Sensitivity (verify low-end of calibration range / verify RL)	(1) Frequency: Daily prior to sample analysis if initial calibration is not performed on same day as sample analysis. If initial calibration is performed on same day as sample analysis and includes the RL as the low-level standard in the initial calibration curve (as required by calibration), then LLCV is not required. (2) Prepared using same source as initial calibration standards: un-distilled. (3) Concentration level must be at the level of the RL for Cyanide. (4) Percent recovery must be 70-130%.	No	NA	(1) Reanalyze LLCV; if acceptable, no further action required. (2) If reanalysis is still outside of criteria and concentrations of Cyanide are ≤10x RL in associated field samples, recalibrate and reanalyze LLCV and associated samples. (3) If concentrations of Cyanide are >10x RL in associated field samples, include explanation in laboratory narrative; no further action required.	Suspend all analyses until LLCV meets criteria unless the concentrations of Cyanide are >10x RL in the associated field samples.
Continuing Calibration Verification (CCV)	Laboratory Analytical Accuracy	(1) Frequency - Every 20 field samples and at the end of the analytical run. (2) Prepared using same source as initial calibration standards: un-distilled. (3) Concentration level near midpoint of curve. (4) Percent recovery must be 85-115%.	No	NA	(1) Reanalyze CCV; if acceptable, no further action required. (2) If reanalysis is still outside of criteria, recalibrate and reanalyze all associated samples	If (3) applies, include explanation in laboratory narrative.

Table VI.A-1: Specific QC Requirements and Performance Standards for Total Cyanide and PAC using WSC-CAM VI.A

Required QC Parameter	Data Quality Objective	Required Performance Standard	Required Deliverable?	Rejection Criteria per WSC-07-350	Required Corrective Action	Required Analytical Response Action
					since last compliant CCV – unless (3) applies. (3) If recovery is high (>115%) and all associated sample results are non-detected, no corrective action required.	
Continuing Calibration Blank (CCB)	Laboratory Analytical Sensitivity (instrument drift & contamination)	(1) Frequency - Every 20 field samples following CCV and at the end of the analytical run. (2) Un-distilled. (3) Cyanide must be <RL.	No	NA	(1) Reanalyze CCB; if acceptable, no further action required. (2) If reanalysis is still outside of criteria, recalibrate and reanalyze all associated samples since last compliant CCB – unless (3) applies. (3) If concentration of Cyanide in CCB is >RL but all associated sample results are either non-detected or >10x concentration of Cyanide in CCB, no corrective action required.	If (3) applies, include explanation in laboratory narrative
Method Blank (MB)	Laboratory Method Sensitivity (contamination evaluation)	(1) Frequency - One per distillation batch of ≤20 field samples. (2) Must be distilled with the samples in the batch. (3) Cyanide must be <RL.	Yes	NA	(1) Reanalyze MB; if acceptable, no further action required. (2) If reanalysis is still outside of criteria, redistill and reanalyze MB and all associated field samples in batch – unless (3) applies. (3) If concentration of Cyanide in MB is >RL but all associated sample results are either non-detected or >10x concentration of Cyanide in MB, no corrective action required.	If (3) applies, include explanation in laboratory narrative.

Table VI.A-1: Specific QC Requirements and Performance Standards for Total Cyanide and PAC using WSC-CAM-VI.A

Required QC Parameter	Data Quality Objective	Required Performance Standard	Required Deliverable?	Rejection Criteria per WSC-07-350	Required Corrective Action	Required Analytical Response Action
Laboratory Control Sample (LCS) for Total Cyanide and Positive Laboratory Control Sample (LCS-P) for PAC	Laboratory Analytical Accuracy (Method Performance for PAC)	(1) Frequency – One per distillation batch of ≤20 field samples. (2) Total Cyanide: LCS must be matrix-matched by distilling with the samples using the same preparation method. CAM requires a solid Standard Reference Material (SRM) be prepared and analyzed with solid field samples as the "solid LCS." An SRM is a soil or sediment matrix that contains Cyanide at a known concentration and with 95% confidence limits. PAC: LCS-P is always an aqueous matrix but is distilled with both solid and aqueous samples. (3) Total Cyanide: Concentration level for aqueous LCS near midpoint of curve. PAC: Concentration of LCS-P = 0.1 mg/L KCN. (4) LCS and LCS-P must be distilled with samples in batch. (5) Total Cyanide: Percent recovery must be 80-120% for aqueous LCS and within vendor control limits (95% confidence limits) for solid LCS. PAC: Percent recovery must be 80-120%.	Yes	Aqueous LCS or LCS-P: Recovery <50%: Cyanide results in associated samples may be rejected.	(1) Reanalyze LCS: if acceptable, no further action required. (2) If reanalysis is still outside of criteria and LCSD is in-control for cyanide, no corrective action required. (3) If LCS and LCSD are both outside of recovery criteria, redistill and reanalyze LCS/LCSD and all associated field samples in batch.	Report recovery exceedances in laboratory narrative.
LCS Duplicate for Total Cyanide and LCS-P Duplicate for PAC	Laboratory Analytical Accuracy & Precision	(1) Frequency – One per distillation batch of ≤20 field samples ONLY if not performing project-specific MD. (2) Total Cyanide: LCS Duplicate must be matrix-matched by distilling with the samples using the same preparation method. CAM requires a solid SRM be prepared and analyzed with solid field samples as the "solid LCS." An SRM is a soil or sediment matrix that contains Cyanide at a known concentration and with 95% confidence limits.	Yes	Same as above for LCS for recovery evaluation.	(1) Reanalyze LCSD; if acceptable, no further action required. (2) If reanalysis is still outside of recovery criteria for cyanide, and LCS is in-control for cyanide recovery, no corrective action required. (3) If LCSD and LCS are both outside of recovery criteria, redistill and	Report recovery and RPD exceedances in laboratory narrative.

Table VI A-1. Specific QC Requirements and Performance Standards for Total Cyanide and PAC using WSC-CAM VI A

Required QC Parameter	Data Quality Objective	Required Performance Standard	Required Deliverable?	Rejection Criteria per WSC-07-350	Required Corrective Action	Required Analytical Response Action
		PAC: LCS-P duplicate is always an aqueous matrix but is distilled with both solid and aqueous samples. (3) Concentration levels must be same as LCS. (4) LCS Duplicate and LCS-P Duplicate must be distilled with samples in batch. (5) Total Cyanide: Percent recovery must be 80-120% for aqueous LCS and within vendor control limits (95% confidence limits) for solid LCS. PAC: Percent recovery must be 80-120%. (6) Analyze immediately after LCS or LCS-P in analytical sequence (7) Total Cyanide: RPDs must be ≤20 for aqueous LCS/LCSD and ≤30 for solid LCS/LCSD. PAC: RPDs must be ≤20 for LCS-P/LCS-P Duplicate.			reanalyze LCS/LCSD and all associated field samples in batch.	
Negative Laboratory Control Sample (LCS-N) for PAC	Method Performance for PAC	(1) Frequency - One per distillation batch of ≤20 field samples. (2) LCS-N must be distilled with samples in batch. (3) Concentration LCS-N = 1.0 mg/L Prussian Blue (Iron-cyanide). (4) Percent recovery must be ≤10 %. (5) LCS-N is always an aqueous matrix but is distilled with both solid and aqueous samples.	Yes	NA	Redistill and reanalyze LCS-N and all associated field samples in batch.	Suspend all analyses until LCS-N meets criteria.
Matrix Spike (MS) Total Cyanide & PAC Project-Specific	Method Accuracy in Sample Matrix	(1) Solid Samples (Soil/Sediment) Frequency: One per 20 field samples per matrix; designated by data user on COC or at project set-up. Aqueous Samples Frequency: One per distillation batch of ≤20 field samples per matrix strongly recommended (designated by data user on COC or at project set-up). (2) Total Cyanide: Concentration level near midpoint of curve.	Yes ONLY when requested by the data user	Recovery <30%: affects non-detects for Cyanide in all associated samples.	(1) Reanalyze MS; if acceptable, no further action required. (2) After reanalysis, if MS recovery is 30-74% or >125% and LCS (or LCS-P) was in control, no corrective action is required. (3) If MS recovery is <30% and associated with non-	Report MS exceedances in laboratory narrative. If redigested due to recoveries <30%, report both sets of sample/MSdata.

Table VI-A-1: Specific QC Requirements and Performance Standards for Total Cyanide and PAC using WSC-CAM-VI A

Required QC Parameter	Data Quality Objective	Required Performance Standard	Required Deliverable?	Rejection Criteria per WSC-07-350	Required Corrective Action	Required Analytical Response Action
		PAC: Concentration level same as LCS-P (KCN). (3) Percent recovery must be 75-125%.			detected results, redistill (homogenize sample well) and reanalyze sample/MS pair. Report results and narrate.	
Matrix Duplicate (MD) Total Cyanide & PAC Project-Specific	Method Precision in Sample Matrix	(1) Frequency: One per distillation batch of ≤20 field samples per matrix is strongly recommended (designated by data user on COC or at project set-up). (2) Prepare by distilling and analyzing an additional aliquot of the same field sample used for MS. (3) RPD for Cyanide must be ≤20 for aqueous and ≤35 for solids.	Yes ONLY when requested by the data user	NA	Narrate.	Report exceedances in laboratory narrative.
General Reporting Issues	NA	(1) Non-detected values must be reported with the sample-specific RL for Total Cyanide and PAC using all appropriate preparation/dilution factors. (2) The laboratory must only report values ≥ the sample-specific RL. (3) Sample concentrations that exceed the highest calibration standard must be diluted and reanalyzed to fall within the linear calibration range. (4) Results for soils/sediments must be reported on a dry-weight basis for comparison to MCP regulatory standards. (5) Results must be reported with 2 or more "significant figures" if ≥RL. If reporting values below the RL, report with 1 or more "significant figures".[2] (6) Refer to Appendix VI A-1 for chain-of-custody requirements regarding preservation, cooler temperature, and holding times.	NA	NA	NA	(1) The performance of dilutions must be documented in the laboratory narrative or on the report form. Unless due to elevated concentrations of Cyanide, reasons for dilutions must be explained in the laboratory narrative. (2) If samples are not preserved properly or are not received with an acceptable cooler temperature, note the non-conformances in the laboratory narrative. (3) If samples are distilled and/or analyzed outside of the holding time, note the non-conformances in

Appendix VI A-3

Analysis Sequence for Total Cyanide and PAC by WSC-CAM-VI A

Typical analytical sequence for Total Cyanide and PAC using WSC-CAM-VI A:

- Initial Calibration
- ICV
- ICB
- LLCV – only required if initial calibration curve not performed on same day as analysis or performed on the same day but does not have a low-level standard at the level of the RL
- MB
- Total CN: LCS / PAC: LCS-P and LCS-N
- Total CN: LCSD / PAC: LCSD-P (LCSD only required if not performing a project-specific MD)
- Total CN: 17 samples – include the project-specific MS and/or MD if applicable / PAC CN: 15 samples – include the project-specific MS and/or MD if applicable
- CCV
- CCB
- 20 samples
- CCV
- CCB
- Etc. (continue 20 samples and CCV/CCB pairs)
- CCV – ending
- CCB – ending

METHOD FOR THE DETERMINATION OF

PHYSIOLOGICALLY AVAILABLE CYANIDE (PAC)

Massachusetts Department of Environmental Protection

Division of Environmental Analysis
(Senator William X. Wall Experiment Station)

Office of Research and Standards

Bureau of Waste Site Cleanup

December 2009
Revision 1
(Replaces the PAC Method published on August 13, 2004)

MassDEP
Physiologically Available Cyanide (PAC) Method

TABLE OF CONTENTS

Section	Topic		Page
1.0	PAC Overview		28
2.0	Sample Preparation		28
	2.1	Soil and Sediment Analysis	28
	2.2	Aqueous Analysis	28
	2.3	Waste Analysis	29
3.0	Reagent Preparation		29
4.0	Apparatus and Materials		29
5.0	Sample Distillation		29
6.0	Analysis		30
7.0	Quality Control		31
8.0	Method Performance Criteria		32
9.0	Sample Collection, Preservation, and Holding Time Specifications		32
Figures			
Figure 1 – PAC Preparation/Distillation Flow Chart			33

DISCLAIMER

Mention of trade names or commercial products does not constitute endorsement by the Massachusetts Department of Environmental Protection (MassDEP). Trade names and commercial products specified within this method are based upon their use in validation studies conducted by MassDEP. Equipment and materials cited in this method may be replaced by similar products, as long as adequate data exist or have been produced documenting equivalent or superior performance.

1.0 PAC Overview

The MassDEP Physiologically Active Cyanide (PAC) Method is a performance based reflux-distillation procedure that is used for the determination of biologically available cyanides and is intended to simulate the interaction of the human digestive system and ingested cyanide complexes. PAC is defined as the quantity of cyanide released during distillation under the temperature and pH conditions specified by this protocol. The cyanide forms released in this distillation include free cyanide, simple cyanide complexes (such as cyanide salts) and certain metal cyanides; with the exception of iron-cyanide complexes (including "Prussian Blue") that are not released under the analytical conditions of this protocol.

Cyanide in the form of hydrocyanic acid (HCN) is released from environmental samples during the PAC distillation under acidic conditions of pH 2 and controlled temperature (to mimic stomach conditions) and captured into an alkaline scrubber solution. The concentration of cyanide in the scrubber solution is then determined spectrophotometrically or titrimetrically by SW-846 Method 9014, SW-846 9012B, or Standard Method 4500-CN-. An additional requirement of both a positive and negative laboratory control sample for PAC is required QC for this method. Analysis by the WSC-CAM-VI A protocol is recommended in support of MCP decisions.

Method performance is verified by the evaluation of the percent recovery of a Positive Laboratory Control Sample (LCS-P) and a Negative Laboratory Control Sample (LCS-N). Potassium Cyanide (KCN) is used as the LCS-P and Prussian Blue is used as the LCS-N for the PAC method. Acceptable percent recovery criteria for LCS-P and LCS-N are listed in Section 7, below and in Table VI A-1 of the WSC-CAM-VI A protocol.

This document details instructions for the manual macro (large-volume) PAC cyanide distillation (macro-distillation) procedure. For alternative micro semi-automatic PAC cyanide distillation (micro-distillation) procedures, follow manufacturer's instructions regarding the adjustment of analytical reagent volumes.

2.0 Sample Preparation

2.1 Soil and Sediment Analysis

Soil and sediment samples are prepared as-received. Pass the soil/sediment sample through a #10 sieve. Discard any material retained on the sieve. Homogenize the sieved sample by stirring with a stainless steel spoon or placing in a mechanical stirring device. Place 10 g of sieved soil/sediment in the reaction flask for the macro-distillation (1 g for the micro-distillation). The PAC concentration in the reaction flask must not exceed 20 mg/L. Perform a percent solids analysis on a separate soil/sediment aliquot. Use the percent solids to report soil/sediment PAC results on a dry-weight basis.

2.2 Aqueous Analysis

Aqueous samples for PAC require no additional preparation prior to distillation. Place 500 mL of the aqueous sample for macro-distillation (50 mL for micro-distillation) directly into the reaction flask. The PAC concentration in the reaction flask must not exceed 20 mg/L. For the macro-distillation, a sample aliquot may be diluted appropriately with distilled water to a final volume of 500 mL to accommodate this requirement.

2.3 Waste Analysis

Solid and oily waste samples should be extracted prior to PAC distillation using SW-846 Method 9013 *Cyanide Extraction Procedure for Solids and Oils*. The waste sample is first extracted with water at pH ≥10. The resultant extract is then distilled using this PAC method, following the aqueous preparation/distillation procedure.

3.0 Reagent Preparation

The following reagent preparation guidelines are for the ***macro-distillation*** procedure. For the micro-*distillation* procedure, adjust reagents according to manufacturer's instructions.

Phosphate Buffer Solution - Dissolve 500 g of $NaH_2PO_4.H_2O$ to 500 mL of distilled water in a one-liter beaker. With the electrode of a pH meter immersed in the solution, adjust the pH of the solution to 1.25 with concentrated phosphoric acid while stirring.

Magnesium Chloride Solution - Dissolve 510 g of $MgCl_2.6H_2O$ in 1-liter of distilled water to prepare a 2.5M $MgCl_2$ solution

Sodium Hydroxide Solution - Dissolve 50 g of NaOH in 1-liter of distilled water to prepare a 1.25N NaOH solution.

Sulfamic Acid (H_2NSO_3H)

Cadmium Carbonate ($CdCO_3$)

4.0 Apparatus and Materials

The required apparatus and materials for the PAC distillation (macro-distillation) are described in Section 4.0, SW-846 Method 9010C, *Total and Amenable Cyanide: Distillation*. Cyanide, as hydrocyanic acid (HCN), is released from samples by acid hydrolysis/distillation and captured in an alkaline mediated gas scrubber under vacuum. Additional requirements are as follows:

- ✓ Samples should be analyzed in a fume hood,
- ✓ A flow meter should be placed at the air inlet, and
- ✓ Equipment should be set-up in a thermostatically-controlled constant temperature bath, or equivalent (such as heating blocks or heating mantles), to maintain constant temperature of distillation. Manual temperature control is less preferable, but allowable if fully documented.

5.0 Sample Distillation

The following distillation procedure is for the ***macro-distillation***. For the micro-distillation, adjust reagents, amounts, and times according to manufacturer's instructions.

5.1 An aliquot of 10.0 ± 1.0 g (w/w) of soil/sediment or 500 mL of aqueous sample (or sample diluted to 500 mL) is placed directly in the 1-liter reaction flask. For soil/sediment samples, rinse the weighing container with distilled water to ensure complete sample transfer and bring to a final analytical volume of 500 mL. Add the distilled water with manual swirling to ensure complete surface contact.

5.2 Add 50 mL of the sodium hydroxide solution (1.25N). Connect the reaction flask, condenser, gas scrubber and vacuum trap. If high sulfides are expected in the sample, add 10 to 15 mg of $CdCO_3$ to the trap. Set temperature of thermostatically controlled constant temperature bath to 78 ± 3°C. When bath has equilibrated at 78°C, place the reaction flask in the bath and apply vacuum to initiate gas flow through gas scrubber.

5.3 Add 75 mL of the phosphate buffer solution, 2 g of sulfamic acid (H_2NSO_3H), and 20 mL of $MgCl_2$ solution through the inlet tube. Test the pH of the solution in the reaction flask to verify that the pH ≤ 2. Place the thermometer in the inlet tube to record the temperature of the solution in the reaction flask.
Note: If using the micro-distillation procedure, pH cannot be checked until the reaction is complete as the micro-distillation apparatus is a closed-system.

5.4 Record the reaction flask temperature every 15 minutes. Maintain the temperature at 78 ± 3° C for a period of **one hour**. Record total reaction time (the total time that the flask is in the water bath). Airflow should be measured at least every 15 minutes. Adjust the vacuum rate so that approximately two bubbles of air per second enter the flask through the air inlet tube (this is the same flow requirement as for total Cyanide by SW-846 Method 9010C). This will translate to a flow rate of 290 to 350 ml/min, depending upon laboratory equipment used, and should be maintained for the total one-hour reaction time. Care should be taken that the sodium hydroxide solution in the gas scrubber does not bubble over.

5.5 After the one hour of reaction time, turn off heating source and allow sample to come to room temperature. Measure the pH of the solution in the reaction flask electrochemically (probe) to verify that the pH was maintained at ≤ 2 during the reaction. Test the absorber solution with lead acetate paper for the presence of excess sulfide before analysis. Treat with bismuth nitrate, as necessary (see SW-846 Method 9010C Section 7.2 for details on treatment of distillates for sulfide).

Analytical Note: The analyst must be continually aware of the potential for cross-contamination. Measured PAC concentrations are generally at or near the method reporting limit. As such, the method is particularly susceptible to positive interferences from the presence of low level cyanide residues on glassware from previous analyses of samples and/or various QC samples and standards with elevated PAC concentrations. Thus, frits, absorber tubes, and condensers should be cleaned with dilute HCl and then rinsed with distilled water between samples.

6.0 Analysis

For the macro-distillation procedure, the entire content of the absorber tube is transferred to a 250 mL volumetric flask. The tube is rinsed with distilled water, with the rinsate added to the flask. The absorbing solution is then brought to volume with distilled water.

The following determinative methods may be used for analysis of PAC in distillates:

- SW-846 Method 9014 – manual colorimetric UV spectrometry for the determination of free (non-complexed) Cyanide (CN^-) and hydrocyanic acid (HCN) in solution/distillates.
  - This method also includes titrimetric determination; however, the sensitivity of the titrimetric method may not meet data quality objectives (see Section 1.6 of the WSC-CAM-VI A protocol for further information)
- SW-846 Method 9012B – automated colorimetric UV spectrometry for the determination of free CN^- and HCN in solution/distillates
- Standard Method 4500-CN^- – includes colorimetric (equivalent to SW-846 Method 9014), titrimetric, and potentiometric procedures for the determination of HCN in distillates

For colorimetric methods, the distillate is treated with chloramine-T at pH <8 to convert the HCN into cyanogen chloride (CNCl) and color is formed by adding pyridine-barbituric acid. Quantitation for PAC in the treated distillates is based on the color absorption at 578-nm wavelength using a UV spectrometer. Absorbance (peak height) is measured as a function of PAC concentration, based on a multi-level calibration curve.

Analysis by WSC-CAM-VI A protocol is recommended in support of MCP decisions.

7.0 Quality Control

Required quality control (QC), frequency, and acceptance criteria for PAC can be found in WSC-CAM-VI A, Table VI A-1 Specific QC Requirements and Performance Standards for Total Cyanide and PAC using WSC-CAM-VIA. Some of the required QC parameters are highlighted below:

One method blank (MB) sample must be distilled with each PAC batch of up to 20 samples. The PAC result must be less than the RL.

Accuracy of the PAC method is measured by two required LCS, which must be distilled with each PAC batch of up to 20 samples:

- Positive Laboratory Control Sample (LCS-P) = 0.1 mg/L Potassium Cyanide (KCN) standard. LCS-P percent recovery (%R) must be 80-120%R of the true value (0.1 mg/L).
- Negative Laboratory Control Sample (LCS-N) = 1.0 mg/L Prussian Blue (iron-cyanide) standard. LCS-N percent recovery must be $\leq$10% of the true value (1.0 mg/L).

In addition to the LCS-P and LCS-N, a project-specific Matrix Spike (MS) is required for PAC in solid matrices (soil/sediment) for WSC-CAM-VI A compliance. For PAC, the spiking solution used for the MS is the LCS-P (KCN standard) and the recovery must be 75-125%.

See the WSC-CAM-VI A protocol, Table VI A-1 for additional details on PAC performance standards and required corrective actions.

8.0 Method Performance Criteria

Compliance with the LCS-P, LCS-N, and MS QC requirements described in Section 7.0 above and Table VI A-1 of the WSC-CAM-VI A protocol is the basis for evaluation of satisfactory PAC performance. Conformity with the PAC method temperature and flow rate specifications in Section 4, together with other specific analytical specifications, is expected under most circumstances to produce acceptable PAC QC results. However, it is expected that some laboratories will be able to satisfy PAC QC requirements even with modifications of this method's temperature and flow rate specifications. For example, one laboratory that assisted MassDEP in method development was able to achieve acceptable recoveries for both LCS-P and LCS-N QC standards for samples distilled at 72°C with a flow rate of 325-350 mL/min.

9.0 Sample Collection, Preservation, and Holding Time Specifications

Sample preservation, container and analytical holding time specifications for surface water, groundwater, soil/sediment and waste samples for PAC analyses conducted in support of MCP decision-making are described in Appendix VI A-1 of the WSC-CAM-VI A protocol.

Figure 1 PAC Preparation/Distillation Flow Chart

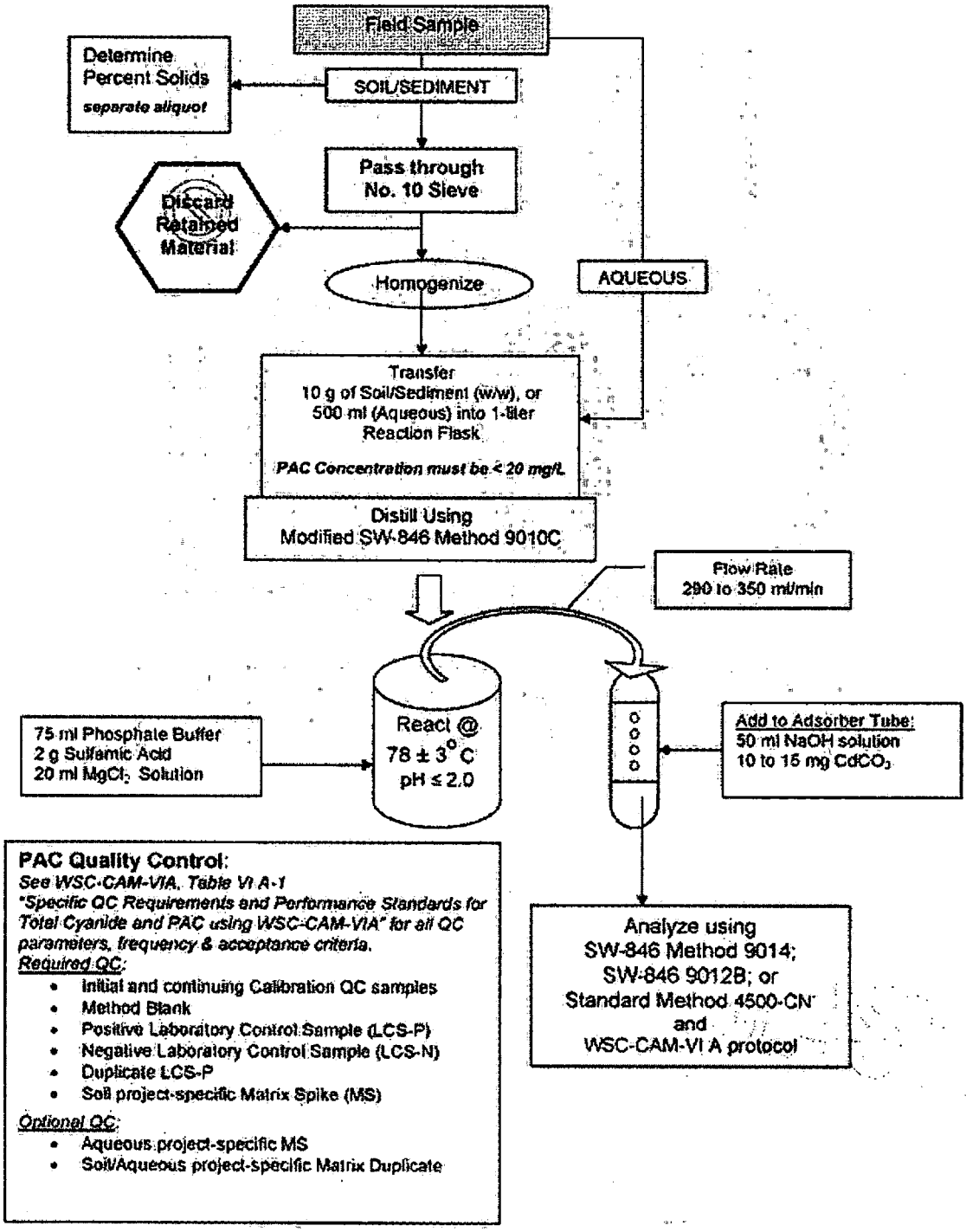

ADDENDUM 4

Connecticut DEP RCPs
Quality Assurance and Quality Control Requirements
Pesticides by Method 8081, SW-846
Version 1.0
July 2005

Table 1A Specific QA/QC Requirements and Performance Standards for Methods 9010/9012/9014*

Required QA/QC Parameter	Data Quality Objective	Required Performance Standard	Required Deliverable	Recommended Corrective Action	Analytical Response Action
Preparation of Samples	Accuracy and Representativeness	All samples must be distilled prior to analysis. See Methods 9010 for details.	NO		
Initial Calibration	Laboratory Analytical Accuracy	1) For manual colorimetric procedure at least every six months or whenever ICV fails. For semi-automated procedure, daily prior to sample analysis. 2) Minimum of calibration blank plus five calibration standards. Low standard must be ≤RL. 3) Linear curve with "r" ≥ 0.995. 4) Samples and stds matrix matched. 5) If titration used, silver nitrate must be standardized as in Method SM4500-CN D (Note 1) every 30 days. 6) Stock cyanide solution must be checked monthly.	NO	Re-optimize instrument and recalibrate as necessary.	Sample analysis cannot proceed without valid initial calibration.
Initial Calibration Verification (ICV)	Laboratory Analytical Accuracy	1) For manual colorimetric and titration procedure, daily and prior to sample analysis. For semi-automated procedure daily immediately after calibration. 2) 2nd source std distilled with batch mid-range or vendor supplied value. 3) ICV ±15% of true value.	NO	Re-calibrate/Re-analyze ICV as required by method.	Suspend all analyses until problem corrected and ICV meets criteria.
Continuing Calibration Verification (CCV)	Laboratory Analytical Accuracy	1) Every 10 samples and at end of analytical sequence. 2) Can be same source or second source. 3) Recovery ±15% of true value	NO	Recalibrate/Re-analyze all samples since last compliant CCV	Report non-conformances in narrative.

Table 1A Specific QA/QC Requirements and Performance Standards for Methods 9010/9012/9014* (continued)

Required QA/QC Parameter	Data Quality Objective	Required Performance Standard	Required Deliverable	Recommended Corrective Action	Analytical Response Action
Continuing Calibration Blank (CCB)	Evaluation of instrument drift, sensitivity, and contamination.	1) Every 10 samples immediately after CCV. 2)) Matrix matched with standards and samples. 3) CCB must be < RL	NO	Recalibrate/Re-analyze all samples since last compliant CCB	Report non-conformances in narrative.
Method Blanks	Laboratory Contamination Evaluation	1) Digested every 20 or every batch, whichever is greater. 2) Matrix specific and matrix matched 3) Cyanide must be <RL	YES	Locate source of contamination and correct problem. Reprepare samples unless all detected analyte concentration >10x method blank level	Report non-conformances in case narrative.
Laboratory Control Sample (LCS)	Laboratory Method Accuracy	1) Every 20 samples or each batch, whichever is more frequent 2) Standard source different from initial calibration source. 3) Matrix specific (solid, aqueous, etc). 4) LCS recoveries ±20% for aqueous media and within vendor control (95% confidence limits) for solids.	YES	Redigest and reanalyze all samples.	Report non-conformances in narrative.
Site Specific Matrix Spike	Accuracy in Sample Matrix	1) Every 20 samples or batch per matrix** 2) Percent recovery limits must be between 75-125%.	Yes**(If analyzed)	None	Note outliers in narrative

Table 1A Specific QA/QC Requirements and Performance Standards for Methods 9010/9012/9014* (continued)

Required QA/QC Parameter	Data Quality Objective	Required Performance Standard	Required Deliverable	Recommended Corrective Action	Analytical Response Action
Site Specific Matrix Duplicate	Precision in Sample Matrix	1) Every 20 samples or batch per matrix** 2) For aqueous samples RPD ≤ 20% 3) For solids RPD ≤ 35%	Yes** (If analyzed)	If LCS in criteria, narrate outliers.	Note outliers in narrative
General Reporting Issues	N/A	1) The laboratory should report only concentrations detected above the sample specific RL. 2) Concentrations below the reporting limit (RL) should be reported as "ND" with the sample specific RL also reported 3) Dilutions: If analyte above linear range, dilute and reanalyze for those analytes. 4) Soils/sediments reported on a dry weight basis. 5) RL must be verified daily with a low level calibration standard the RL. Must be part of initial calibration.	YES	N/A	

Footnotes for Table 1A

* Refers to latest promulgated version of SW-846 Method 9010/9012/9014.
RPD = Relative Percent Difference
%RSD = Relative Percent Standard Deviation
r = Correlation Coefficient
N/A = Not Applicable

1. Standard Methods for the Examination of Water and Wastewater, 20th ed, APHA-AWWA-WEF.

1.7 Reporting Limits for Methods 9010/9012/9014

The Reporting Limit (RL) for the colorimetric methods is based upon the lowest standard in the initial calibration and taking into account the exact sample mass, any dilution factors, percent moisture, etc. The RL for the titrametric method is based upon the normality of the silver nitrate, the sample volume titrated, and the sample weight/volume taken for distillation.

1.8 Routine Reporting Deliverables for Method 9010/9012/9014

The following table (Table 1.2) lists the routine report deliverables. Note that while laboratories are not required to report certain items, they must keep the data on file and may be required to report all items in special circumstances.

The following rules apply to reporting results:

Non-Detects: Report all non-detects and results below the reporting limit as "ND" (Not Detected at the specified Reporting Limit). The reporting limit for each compound in each sample must be listed on the report and take into account the exact sample mass, any dilution factors, percent moisture, etc.

Compounds detected above the reporting limit in blanks and found in samples, also above the reporting limit, shall be flagged with a "B" suffix (e.g. 25B).

All soil/sediment results shall be reported on a dry weight basis.

PLANTER

Table 1.2 Report Deliverables

PARAMETER	DELIVERABLE	COMMENTS
Sample Preparation Data	NO	
Initial Calibration	NO	
Initial Calibration Verification Standard (ICV)	NO	ICV must pass
Initial Calibration Blank (ICB)	NO	Note non-conformances in narrative
Continuing Calibration Verification (CCV)	NO	CCV must pass
Method Blanks	YES	Note non-conformances in narrative. Flag all positive sample results above RL with "B" flag.
Lab Control Sample (LCS)	YES	Note non-conformances in narrative
Site Specific Matrix Spike/ Matrix Duplicate	YES (If requested)	Note non-conformances in narrative
General Reporting Issues	YES	Note non-conformances in narrative
QA/QC Certification Form	YES	Signed by laboratory director or his/her designee.

ARCADIS

Table 2A Sample Containers, Preservation, and Holding Times

MATRIX	CONTAINER	PRESERVATIVE	HOLDING TIME
Aqueous (No chlorine present)	500 mL plastic† or glass	Sodium or potassium hydroxide to pH >12	14 days
Aqueous (Chlorine present)	500 mL plastic† or glass	1) Neutralize chlorine with either sodium arsenite, sodium thiosulfate, or ascorbic acid. 2) Add sodium or potassium hydroxide to pH >12	14 days
Soil/Sediment samples.	250 mL plastic or glass jar with Teflon or plastic lined cap.	Cool to 4 ± 2° C	14 days
High Concentration Waste Samples	Collect in amber glass jar with Teflon or plastic lined cap.	Cool 4 ± 2° C. Protect from light	14 days

Notes:
† Plastic bottles must be either high density polyethylene or Teflon

MASTER

Table F-10. Cyanide Analysis (Methods 9010, 9012, and 9014)					
QC Check	**Minimum Frequency**	**Acceptance Criteria**	**Corrective Action**	**Flagging Criteria**	**Comments**
Demonstrate acceptable analytical capability	Prior to using any test method and at any time there is a significant change in instrument type, personnel, test method, or sample matrix.	QC acceptance criteria published by DoD, if available; otherwise use method-specified criteria.	Recalculate results; locate and fix problem, then rerun demonstration for those analytes that did not meet criteria (see Section C.1.f).	NA.	This is a demonstration of analytical ability to generate acceptable precision and bias per the procedure in Appendix C. No analysis shall be allowed by analyst until successful demonstration of capability is complete.
LOD determination and verification (See Box D-13)					
LOQ establishment and verification (See Box D-14)					
Initial calibration (ICAL) (six standards and a calibration blank)	Daily ICAL prior to sample analysis.	$r \geq 0.995$.	Correct problem, then repeat ICAL.	Flagging criteria are not appropriate.	Problem must be corrected. No samples may be run until calibration has passed. All calibration standards must be distilled if samples are expected to contain sulfides.
Distilled standards (one high and one low)	Once per multipoint calibration.	Within ± 15% of true value.	Correct problem, then repeat distilled standards.	Flagging criteria are not appropriate.	Problem must be corrected. No samples may be run until distilled standards have passed.
Second source calibration verification (ICV)	Once after each ICAL, prior to beginning a sample run.	Within ± 15% of true value.	Correct problem and verify second source standard. Rerun second source verification. If that fails, correct problem and repeat ICAL.	Flagging criteria are not appropriate.	Problem must be corrected. No samples may be run until calibration has been verified.

MASTER

Table F-10. Cyanide Analysis (Methods 9010, 9012, and 9014) (continued)

QC Check	Minimum Frequency	Acceptance Criteria	Corrective Action	Flagging Criteria	Comments
Method blank	One per preparatory batch.	No analytes detected > ½ RL and > 1/10 the amount measured in any sample or 1/10 the regulatory limit (whichever is greater). Blank result must not otherwise affect sample results. For common laboratory contaminants, no analytes detected > RL (see Box D-1).	Correct problem, then see criteria in Box D-1. If required, reprep and reanalyze method blank and all samples processed with the contaminated blank.	If reanalysis cannot be performed, data must be qualified and explained in the case narrative. Apply B-flag to all results for the specific analyte(s) in all samples in the associated preparatory batch.	Problem must be corrected. Results may not be reported without a valid method blank. Flagging is only appropriate in cases where the samples cannot be reanalyzed.
LCS	One per preparatory batch.	QC acceptance criteria specified by DoD, if available; see Box D-3 and Appendix G.	Correct problem, then reprep and reanalyze the LCS and all samples in the associated preparatory batch for failed analytes, if sufficient sample material is available (see full explanation in Appendix G).	If reanalysis cannot be performed, data must be qualified and explained in the case narrative. Apply Q-flag to specific analyte(s) in all samples in the associated preparatory batch.	Problem must be corrected. Results may not be reported without a valid LCS. Flagging is only appropriate in cases where the samples cannot be reanalyzed.
Matrix spike (MS)	One per preparatory batch per matrix (see Box D-7).	For matrix evaluation, use QC acceptance criteria specified by DoD for LCS.	Examine the project-specific DQOs. If the matrix spike falls outside of DoD criteria, the method of standard additions shall be used for the analysis.	For the specific analyte in the parent sample, apply J-flag if acceptance criteria are not met.	If MS results are outside the LCS limits, the data shall be evaluated to determine the source of difference and to determine if there is a matrix effect or analytical error.
Matrix spike duplicate (MSD) or sample duplicate (replicate)	One per preparatory batch per matrix (see Box D-7).	MSD: For matrix evaluation use QC acceptance criteria specified by DoD for LCS. MSD or sample duplicate: RPD ≤ 20% (between MS and MSD or sample and sample duplicate).	Correct problem and reanalyze sample and duplicate.	Apply J-flag if sample cannot be rerun or reanalysis does not correct problem.	The data shall be evaluated to determine the source of difference.
Results reported between DL and LOQ	NA.	NA.	NA.	Apply J-flag to all results between DL and LOQ.	

ESS Laboratory
Division of Thielsch Engineering
Cranston, RI

SOP NO. 60_8081

ORGANOCHLORINE PESTICIDES BY GAS CHROMATOGRAPHY: CAPILLARY COLUMN TECHNIQUE (EPA METHOD 608, SM 6630C and SW-846 METHOD 8081A/B)

APPROVED BY:

Operations Manager	Date 11/7/12
QA Manager	Date 11/7/12
Laboratory Director	Date 11/8/12

MASTER

Master marked in red. Controlled copies marked in green.

Organochlorine Pesticides by Gas Chromatography: Capillary Column Technique (EPA METHOD 608, SM 6630C and SW-846 METHOD 8081A/B)

1.0 SCOPE AND APPLICATION

1.1 This procedure is used to determine the concentrations of various organochlorine pesticides, in extracts from wastewater, ground water, surface water, sludge, soil, and solid matrices. Open-tubular, capillary columns are employed with electron capture detectors (ECD).

1.2 This procedure is applicable to methods 608, 8081A/B and SM6630C. The criteria for each of these methods are in this SOP.

1.3 Although performance data is presented for many of the compounds, it is unlikely that all of them could be determined in a single analysis. This limitation results because the chemical and chromatographic behavior of many of these chemicals can result in co-elution. Several cleanup/fractionation schemes are provided in this procedure. Any compound is a potential method interference when it is not a target analyte.

1.4 Compound identification (single component compounds) based on single column analysis should be confirmed on a second column, or should be supported by at least one other qualitative technique. This procedure describes analytical conditions for a second gas chromatographic column that can be used to confirm the measurements made with the primary column. GC/MS is also recommended as a confirmation technique if sensitivity permits.

1.5 This procedure has reporting limits of 0.1 ug/L for aqueous samples and 5 ug/Kg for solid and waste samples. Higher reporting levels will result from reduced sample volumes and/or low percent solids. Lower detection limits are achievable by further concentration of sample extract upon request.

2.0 METHOD SUMMARY

2.1 A measured volume or weight of sample (approximately 1 L for aqueous samples and 2-30 g for soils) is extracted using the appropriate sample extraction technique.

2.2 Liquid samples are extracted at neutral pH with methylene chloride using the separatory funnel technique (SOP 50_3510C). Solid samples are extracted with methylene chloride/acetone using either the automated Soxhlet extraction (SOP 50_3541) or the microwave extraction method (SOP 50_3546). The extracts for liquid and solid samples are exchanged into hexane before analysis.

MASTER

2.3 A variety of cleanup steps may be applied to the extract, depending on the nature of the co-extracted matrix interferences and the target analytes. After cleanup, the

ESS Laboratory. This document may be reproduced solely for internal use.

extract is injected into a gas chromatograph with a wide-bore fused silica capillary column and electron capture detector (GC/ECD) for analysis.

3.0 HEALTH AND SAFETY

3.1 Each employee has been trained and has acknowledged being trained in the safe use and handling of chemicals being used in the laboratory. This training has been performed according to the ESS Training SOP 80_0016 and by the Chemical Hygiene Plan SOP 90_0001 in conjunction with the Safety orientation

3.2 All sample and material handling should be done in a hood while using proper protective equipment to minimize exposure to liquid or vapor. Minimum personnel protective equipment includes the use of laboratory safety glasses, a lab coat or apron, and protective gloves.

3.3 The MSDSs for the concentrated chemicals used in the laboratory are kept on file in a central location that is available for all employees to review.

4.0 SAMPLE PRESERVATION, CONTAINERS, HANDLING AND STORAGE

4.1 Aqueous samples are collected in 1 Liter borosilicate glass jars with Teflon lined caps. The samples are stored in a dark walk-in cooler at 4° C. Two liters should be provided so samples can be re-extracted when necessary.

4.2 Use potassium iodide starch paper to check each water sample for residual chlorine. If chlorine is detected, add sodium thiosulfate to remove the chlorine. Add 1-mL 10% sodium thiosulfate solution per liter. Addition of sodium thiosulfate solution to the sample container may be performed in the laboratory or prior to field use. For EPA method 608 if the sample is being analyzed for Aldrin, sodium thiosulfate should be added to remove residual chlorine when residual chlorine is present. For method 8081 if any residual chlorine is detected the sample must be treated with sodium thiosulfate. Since most 608 samples are analyzed for Aldrin each sample is checked for residual chlorine with the potassium iodide starch paper. The paper will react to free Iodine/Chlorine and peroxides in solution. Lower levels react with strip at 5 - 10 ppm. Chlorine reacts immediately. Initial reactions show a slight blue color, while higher concentrations turn the strip from dark blue to purple. Upper limits for chlorine are between 400 to 450 ppm. If the paper indicates the presence of chlorine sodium thiosulfate is added. If no chlorine is detected no sodium thiosulfate is added.

4.3 Aqueous samples must be extracted within 7 days from date sampled. When analyzing samples for EPA method 608, samples that are not between pH 5-9 ***must*** be extracted within 72 hours. If the samples will not be extracted within 72 hours of collection, the sample should be adjusted to a pH range of 5.0-9.0 with sodium hydroxide solution or sulfuric acid. Record the volume of acid or base used.

MASTER

4.4 Soil/sediment samples are collected in 4–8 ounce jars with Teflon lined caps. The samples are stored in the dark at 4°C. Thirty grams of sample is required for extraction and ten grams is required to determine the percent solids. One hundred grams should be provided so samples can be re-extracted when necessary.

4.5 Soil/Sediment samples must be extracted within 14 days of date sampled.

4.6 All extracts are stored in 10ml Teflon capped vials in the extract storage refrigerator located in the Organic Prep lab. These extracts are stored at 4°C and must be analyzed within 40 days of date extracted.

5.0 INTERFERENCES AND POTENTIAL PROBLEMS

5.1 Sources of interference in this method can be grouped into three broad categories: 1) contaminated solvents, reagents or sample processing hardware; 2) contaminated GC carrier gas, parts, column surfaces or detector surfaces; and 3) the presence of co-eluting compounds in the sample matrix to which the ECD will respond. Interferences co-extracted from the samples will vary considerably from waste to waste. While general cleanup techniques are referenced or provided as part of this method, unique samples may require additional cleanup approaches to achieve desired degrees of discrimination and quantitation.

5.2 Interferences by phthalate esters introduced during sample preparation can pose a major problem in pesticide determinations. Common flexible plastics contain varying amounts of phthalate esters, which are easily extracted or leached from such materials during laboratory operations. Cross-contamination of clean glassware routinely occurs when plastics are handled. Avoiding contact with any plastic materials and checking all solvents and reagents for phthalate contamination can best minimize interferences from phthalate esters. Exhaustive cleanup of solvents, reagents, and glassware may be required to eliminate background phthalate ester contamination.

5.3 Glassware must be scrupulously cleaned as soon as possible after use by rinsing with the last solvent used. Detergent washing with hot water, and rinses with tap water should follow this. See SOP 50_0001.

5.4 The presence of elemental sulfur will result in broad peaks that interfere with the detection of early-eluting organochlorine pesticides. Sulfur contamination should be expected with sediment samples. SOP 50_3660 is suggested for removal of sulfur.

5.5 Other halogenated pesticides or industrial chemicals may interfere with the analysis of pesticides. Florisil (SOP 50_3620) cleanup eliminates co-eluting chlorophenols.

MASTER

6.0 EQUIPMENT/APPARATUS

ESS Laboratory. This document may be reproduced solely for internal use.

6.1 **Gas chromatograph**: an analytical system complete with gas chromatograph suitable for on-column and splitless injection and all required accessories including syringes, analytical columns, gases, electron capture detectors (ECD) and DOS based PC system interfaced to the GC with HP Chemstation/ EnviroQuant software.

6.1.1 **Wide-bore Columns**:

6.1.1.1 Column 1 (RTX-CL Pesticide) 30 m x 0.53-mm ID fused silica capillary column, 0.50 um film thickness.

6.1.1.2 Column 2 (RTX-CL Pesticide II) 30m-x 0.53-mm ID fused silica capillary column, 0.42 um film thickness.

6.1.1.3 RTX CL Pesticide I and II 0.32mm ID columns may also be used on secondary instruments.

6.1.2 **Miscellaneous Instrument Parts**:

6.1.2.1 Single Gooseneck glass liners from either HP or Restek.

6.1.2.2 Gold Seals and Washers (HP 05971-27305)

6.1.2.3 Graphite Ferrules (0.53mm.)

6.1.2.4 O-rings (HP #5180-4182)

6.1.2.5 HP ceramic tiles for cutting columns.

6.2 **10 uL** glass bore Injector **Syringe**.

6.3 Class A **Volumetric flasks,** various sizes.

6.4 **Sample vials**: glass with Teflon-lined crimp tops, 2.0ml.

6.5 **Hamilton microliter syringes** – 10 µl, 25 µl, 100 µl, 500 µl, and 1000 µl

6.6 **Data system**:

6.6.1 **Computers:** All computer systems are networked to a Windows 2012 R2 server, which is the destination of all files. A differential back-up is performed nightly; weekly backups are differential, and monthly backups are full. We keep daily backups for 7 days, weekly backups for 7 weeks and monthly backups indefinitely.

MASTER

ESS Laboratory. This document may be reproduced solely for internal use.

6.6.2 **Software:** HP/Agilent Environmental Chemstation - The software is interfaced to the electron capture detectors and allows the continuous acquisition and storage on machine-readable media of all chromatograms obtained throughout the duration of the instrument program. The software is capable of integrating the abundance in any EICP between specified times. Current versions SVOA ECD3:G1045A version 01.00 and SVOA ECD6:G1701DA Version D.00.01.27.

7.0 REAGENTS AND STANDARDS

7.1 **Reagents**: All reagents should be reagent or pesticide grade for this analysis. Unless otherwise indicated all reagents shall conform to specifications of the Committee on Analytical Reagents of the American Chemical Society, where such specifications are available. Other grades may be used provided it is first ascertained that the reagent is of sufficiently high purity to permit its use without lessening the accuracy of the determination.

7.1.1 **Solvents**:

7.1.1.1 **n-Hexane**
7.1.1.2 **Methylene Chloride**
7.1.1.3 **Acetone**
7.1.1.4 **Isooctane (2,2,4-trimethylpentane)**

7.2 **Standards**: Store all standard solutions (stock, working, and matrix spiking), with the exception of primary standards, at 4° C in the dark. Primary standards are stored at room temperature to prevent crystallization and consequent loss of analytes from solution, as recommended by the manufacturer. Studies have determined that there is no noticeable loss of analytes by evaporation during normal storage periods.

7.2.1 **Primary Standards**: Expiration dates of unopened/opened primary standards are as stated in SOP 50.0006 or as stated by the manufacturer, whichever is earlier. Copies of the certificates of analysis are in a binder in the SVOA Dept. These certificates detail the compounds in each of the mixes. Certificates are kept on file in the laboratory. The following are typical stock standard solutions purchased as certified solutions. Other vendors may be used.

Primary Standard	Manufacturer	Catalog No.	Concentration
Pesticide Mix	AccuStandard	M-8081-SC	1000 µg/ml
Hexachlorobenzene	AccuStandard	ARP-9-1/12	100 µg/ml
PEM Mix	AccuStandard	M-8081-DS	200 µg/ml
TCX/DCB Pest/PCB Surrogate	Accustandard	CLP-032-Rpak	200 mg/L
Toxaphene	Accustandard	P-093S	100 µg/ ml
Chlordane	Accustandard	AS-0089	1000 µg/ ml
Alachlor Standard	Restek	32204	1000 µg/ ml

WORKING COPY

ESS Laboratory. This document may be reproduced solely for internal use.

Secondary Standard	Manufacturer	Catalog No.	Concentration
Pesticide Second Source	Ultra Scientific	PPM-808C	1000 µg/ml
Hexachlorobenzene	Ultra Scientific	EPA-1125	1000 µg/ml
Toxaphene	Restek	32071	5000 µg/ ml
Chlordane	Ultra Scientific	PP -150	100 µg/ ml
Alachlor Solution	Ultra Scientific	EPA-1068	5000 µg/ ml

7.2.2 **Primary Stock standard** is used to prepare the single-component Pesticide working standards. 50 µl of the primary pesticide mix standard, 250 µl of the primary surrogate standard, 50µl of the Alachlor Standard and 500 µl of the Hexachlorobenzene standard is added to a 25 ml volumetric flask with the Hamilton syringes and diluted to the 25 ml mark with Hexane. The final concentration for each analyte and surrogate is 2000 ng/ml. ***The standard has an expiration date of one year from preparation or the earliest expiration date of the primary standards (whichever is earliest).***

7.2.3 **Pesticide Working Standards**

7.2.3.1 **Pesticide Initial Calibration Working Standards** are prepared by dilution of the primary stock standards with Hexane. Standards are prepared in volumetric flasks. Working standards are stored in the 40 ml amber vials for a maximum of six months. The lowest concentration level is at a concentration near but above the method detection limit. The concentrations should correspond to the expected range of concentrations found in real samples and bracket the linear range of the detector. The following table details the concentrations (ng/ml) of each analyte at each individual level.

Target Analyte	Volume Stock (7.2.2)	Initial Conc. (ng/ml)	Final Volume (ml)	Final Concentration
Level 1	12.5 µl	2000	25.0	1 ng/ml
Level 2	62.5 µl	2000	25.0	5 ng/ml
Level 3	125 µl	2000	25.0	10 ng/ml
Level 4	750 µl	2000	50.0	30 ng/ml
Level 5	625 µl	2000	25.0	50 ng/ml
Level 6	1500 µl	2000	50.0	60 ng/ml
Level 7	1000 µl	2000	25.0	80 ng/ml
Level 8	1250 µl	2000	25.0	100 ng/ml

MASTER

7.2.3.1.1 All levels are prepared using Hamilton syringes and hexane as the diluent. All analytes and surrogates are at the same concentration, see list of analytes in 8.5.8.4. All standards are measured with a 1000 µl graduated syringe unless otherwise noted. All levels are prepared from dilutions of the stock standard.

ESS Laboratory: This document may be reproduced solely for internal use.

7.2.3.2 **Pesticide Continuing Calibration Verification Standard (CCV)**: This is the Level 4 standard as prepared in 7.2.3.1. When performing analysis for the DoD, the concentration of the CCV must be varied throughout the calibration range with at least one CCV at or below the middle of the calibration range.

7.2.4 **Pesticide Second Source Standards (ICV/LCS/MS)**

7.2.4.1 **Pesticide Second Source Stock standard**: This stock standard is prepared at a concentration of 2000 ng/ml. Fifty (50) µl of the second source pesticide mix from Ultra, 50 µl of the Hexachlorobenzene second source, 250 µl of the surrogate mix and 10 µl of the second source Alachlor mix is added to a 25 ml volumetric flask and diluted to the 25 ml mark with Hexane. ***The standard has an expiration date of one year from preparation or the earliest expiration date of the primary standards (whichever is earliest).***

7.2.4.2 **Pesticide Second Source Initial Calibration Verification (ICV) Working Standard** is prepared at a concentration of 50 ng/ml. 1.25 ml of the second source stock standard (7.2.4.1) is diluted to 50 ml in a 50 ml volumetric flask. The standard is transferred to a 40 ml amber vials.

7.2.5 **Toxaphene and Chlordane Standards:** Separate standards are prepared for each multi-component target analyte.

7.2.5.1 The **Primary Toxaphene Stock Standard** is prepared at a concentration of 5000 ng/ml for Toxaphene and using hexane as the diluent. 500 µl of the primary Toxaphene Mix from Accustandard, measured with a 1.0 ml graduated syringe, and 4 µl of the primary surrogate mix, measured with a 10 µl graduated syringe, is diluted to 10 ml in a 10 ml volumetric flask. (Surrogate at 80 µg/L.)

7.2.5.2 The **Toxaphene Working Standard** is prepared from the Primary Toxaphene stock standard (7.2.5.1). Only a single point is needed unless otherwise specified. Level is prepared using a 1000 µl graduated syringe and diluted with hexane.

MASTER

Level	Initial Conc. (ng/ml)	Amount Added (µl)	Final Vol. (µl)	Final Conc. Toxaphene (ng/ml)	Final Conc. Surrogate (ng/ml)
1	5000	500	1000	2500	40

7.2.5.3 Prepare the **Toxaphene Second Source Stock Standard** at 2500 ng/ml from a 100 µg/ml solution (prepared by diluting 0.2 ml of 5000 µg/ml (Restek) to 10 ml with hexane).

ESS Laboratory. This document may be reproduced solely for internal use.

7.2.5.4 Prepare the **Toxaphene Second Source Working Standard** at 2500 ng/ml from a 100 µg/ml solution (prepared by diluting 0.2 ml of 5000 µg/ml (Restek) to 10 ml with hexane); dilute 250 µl of the 100 µg/ml solution and 2 µl of surrogate to a final volume of 10 ml, with hexane.

7.2.5.5 The **Chlordane Stock Standard** is prepared at a concentration of 10 µg/ml using hexane as the diluent. 100 µl of the primary Chlordane Mix from Accustandard (100 µg/ml), measured with a 1000 µl graduated syringe, and 50.0 µl of the primary surrogate mix, measured with a 100 µl graduated syringe, is diluted to 10 ml in a 10 ml volumetric flask. (Surrogate at 1.0 µg/ml.)

7.2.5.6 The **Chlordane Working Standards** are prepared at five levels from the Chlordane stock standard (7.2.5.3). All levels are prepared using a 1000 µl graduated syringe and diluted with hexane.

Level	Initial Conc. (ppm)	Amount Added	Final Volume (ml)	Final Conc. Chlordane (ng/ml)	Final Concen. Surrogate (ng/ml)
1	10	625 (µl)	25	250	25

7.2.5.7 **The Chlordane Second Source Standard (ICV)** is prepared at 250 ng/ml using hexane as the diluent. 125 µl of the Ultra Scientific Chlordane Mix measured with a 500 µl graduated syringe and 12.5 µl of the primary surrogate mix, measured with a 25 µl graduated syringe, are diluted to 50 ml in a 50 ml volumetric flask.

7.2.6 **Surrogate/Matrix Spike Solution**: Prepared according to the following chart.

Analyte	**Initial Conc.**	**Amount**	**Final Volume**	**Final Conc.**
TCX/DCB (Surrogate)	200 ug/ml	500 µL[3]	200 ml[1]	0.5 ug/ml
Pesticide Mix (Ultra) Hexachlorobenzene (Ultra)	1000 ug/ml	50 µl[2]	100 ml	0.5 ug/ml
Alachlor (Ultra)	5000 ug/ml	10 µl[4]	100 ml	0.5 ug/ml

[1] Volumetric glassware size (e.g., final vol. of 200 ml made up in a 200 ml vol. flask).
[2] 100 µl syringe is used. [3] 1000 µl syringe is used. [4] 25 µl syringe is used.

8 PROCEDURE

MASTER

8.2 **Extraction**:

8.2.5 Water samples are extracted at a neutral pH with methylene chloride using separatory funnel extraction (SOP 50_3510). Extract solid samples with methylene chloride-acetone (1:1) using automated Soxhlet extraction (SOP 50_3541) or microwave extraction (SOP 50_3546) procedures. ***NOTE: When solids are analyzed for MA MCP , they must be extracted by the automated Soxhlet (SOP 50.3541) or microwave (SOP 30.3546) methods.***

8.3 **Cleanup/Fractionation**:

8.3.5 Cleanup procedures may not be necessary for a relatively clean sample matrix, but most extracts from environmental and waste samples will require additional preparation before analysis. The specific cleanup procedure used will depend on the nature of the sample to be analyzed and the data quality objectives for the measurements. General guidance for sample extract cleanup is provided in this section:

8.3.5.5 Perform Florisil Cleanup (SOP 50_3620) to separate pesticide residues from other chlorinated hydrocarbons (polar compounds).

8.3.5.6 Perform Sulfur Cleanup (SOP 50_3660) to remove elemental sulfur, which interferes with electron capture gas chromatography of certain pesticides.

8.3.5.7 Perform Gel Permeation Cleanup (SOP 50_3640) to separate pesticide residues from other high molecular weight hydrocarbons and sulfur compounds. Currently inactive.

8.3.5.8 Perform Carboprep Cleanup to remove mid- to high non-polar compounds.

8.4 **Instrument Maintenance**: See Section 19.0 for instrument maintenance and troubleshooting instructions.

8.5 **Instrument Set Up**:

8.5.1 Operating Conditions: Set the chromatographic system to the following operating conditions:

Injector temperature =	225 °C
Detector temperature =	325 °C
Oven temperature Program:	
Initial temperature =	120 °C
Initial time =	1.00 min
Ramp rate =	11.0°C/min to 300°C
Final time =	8.5 min

ESS Laboratory. This document may be reproduced solely for internal use.
MASTER

Carrier gas = helium at 0.99999 purity.
Constant pressure = 5.0 psi

8.5 **Initial Calibration (single component analytes):**

8.5.1 ESS Laboratory's policy is that the audit trail on the Chemstation/Enviroquant software is always on. This ensures that any changes made to the instrument operating method be documented through the audit trail.

8.5.2 All acceptance criteria for initial and continuing calibration apply to both the primary and secondary columns.

8.5.3 **Priming the Column**: Once the chromatographic system operating conditions have been established, calibration may begin. Because of the low concentration of pesticide standards injected on a GC/ECD, column adsorption may be a problem when the GC has not been used for a day or more. Therefore, the GC column should be primed or de-activated by injecting a pesticide standard mixture approximately 20 times more concentrated than the mid concentration standard. Inject this standard mixture prior to beginning the initial calibration or calibration verification.

CAUTION: Several analytes, including Aldrin, may be observed in the injection immediately following this system priming. Always run an acceptable solvent blank prior to running any standards or samples.

Loading the instrument: All standards and samples are transferred with disposable pipettes into 2 ml target vials designed to fit the HP auto-sampler. The target vials are labeled with the ID of the standard or sample using a fine point marker. The tray on the auto-sampler is numbered 1-99. A single column connects the inlet to a glass y splitter that is connected to two different columns that each go to a different detector. This allows each standard and sample to be injected once, split into two different columns and detected on two different detectors.

The PEM standard is placed in slot 1. The 7-level standards are placed in slots 2-8. This is the typical setup for the calibration standards. Five points minimum are required for 8081. Three points minimum are required for method 608. Vials can be placed in different slots as long as the slot number is written in the logbook.

8.5.4 **Log Book**: All samples set up on the instrument must be entered into the run logbook prior to sample analysis. Run logs are Excel spreadsheets stored on the network. The logbook must be filled out completely with the date, vial number (slot number), computer file number, method number, ESS lab ID, and the initials of the analyst setting up the instrument.

MASTER

8.5.4.1 Date includes the day, month, and year.

ESS Laboratory. This document may be reproduced solely for internal use.

8.5.4.2 Vial number: This field ***must*** be filled in for each entry.

8.5.4.3 Computer file ID is an abbreviation of the path and file associated with a particular vial number. (e.g. vial #3 analyzed on 3/12/98 has a computer file ID of 031298003)

8.5.4.4 The ESS Lab ID includes the ID of the standards, samples and all QC samples.

8.5.4.5 Initials are signed by the analyst setting up the instrument.

8.5.4.6 The Comment section is a summary of calibration results, dilution information, and any unusual observations. (Examples would include: carry over information into the sample, retention time shift, injection time, calibration standard is less than 15% recovery, sample needs dilution.)

8.5.4.7 The Method section is the method in the chromatographic software used to operate the instrument.

8.5.5 At the beginning of each 12-hour shift a **Performance Evaluation Mixture** (PEM) is run to check for degradation problems. The PEM must also be analyzed before the initial calibration. DDT and Endrin easily degrade in the injection port when the injection port or front of the column is dirty. When the PEM is injected, the degradation products of 4,4'-DDT (4,4'-DDE and 4,4'-DDD) are analyzed along with the degradation products of Endrin (Endrin aldehyde and Endrin Ketone). If the degradation of either DDT or Endrin exceeds 15%, take corrective action before proceeding with calibration. Corrective action includes the following:

8.5.5.1 Maintaining the injection port. DDT and Endrin breakdown can be minimized by thoroughly cleaning the injection port. Particulates on the surface of the injection port or liner can contribute to the Endrin breakdown.

8.5.5.2 High Endrin breakdown can also occur while using a y-split, if particles get trapped in the y-split taper replace y-split.

8.5.5.3 A poorly cut column can contribute to the DDT breakdown. Check the column to ensure the end is not jagged.

8.5.6 The percent breakdown is calculated as shown in section 9.4.

8.5.7 After the PEM mix has been analyzed and is within the required QC criteria, the analysis of the 7 level calibration standards may begin. All 7-level standards are injected like the sample using the instrument set-up criteria in section 8.4. The standards are injected from the lowest to the highest standard (Pesticide Level 1 – Level 7).

8.5.8 **Starting a run with Chemstation Software**: The GC is controlled through Chemstation. These methods are set up with the instrument setup information from section 8.4. All of the

ESS Laboratory. This document may be reproduced solely for internal use.

operating parameters are saved in Chemstation under method file ID. The PT8081 method operates the front and rear injectors. These methods are saved in the C:\HPCHEM\5\METHOD\ directory. A copy of the Chemstation method is in Attachment A. To run the instrument:

8.5.8.1 Open the **Chemstation** icon.

8.5.8.2 From the Chemstation Menu select **Sequence**.

8.5.8.3 In **Initial Setup** type the name of the directory where data will be stored. For the pesticide analysis, all data is stored in a directory called GE for GC3 and GH for GC6 followed by the date. (E.g. if samples were set up to run on 9/12/05 on GC3 then the directory would be called GE091205)

8.5.8.4 In **Analytical Sequence** type in the vial numbers that correspond to when the front and rear injectors will start and stop analyzing.

8.5.8.5 In the **Sample List** type in the ID's of the samples and standards next to the corresponding vial numbers.

8.5.8.6 Select **Save** to save the newly created sequence. Save the sequence with the day created or the ID. (e.g.: A sequence saved on Monday is saved as Mon.s. Sequences do not have to be saved and can be easily recreated. Saving a sequence can save time if for any reason the analytical sequence needs to be restarted due to an instrument or computer malfunction.

8.5.8.7 Start the analysis by selecting **Run Analytical Sequence**.

8.5.8.8 A Chemstation data file will be created for each sample and standard. These files will be stored in the directory C:\HPCHEM\1\data.

8.5.9 **Reviewing the Initial Calibration Data:** All GC Chemstation Data is reduced with the EnviroQuant software. (Refer to EnviroQuant Operator's Manual).

8.5.9.1 Setting up an EnviroQuant Method: All pesticide methods are set up as documented in Attachment A. With each new calibration, the response and absolute retention times are updated. The absolute retention times are taken from Pesticide Level 4 (50 ppb).

8.5.10 Updating a New Initial Calibration:

MASTER

8.5.10.1 Load any pesticide method.

8.5.10.2 Save the method under the date that the standards and samples were set up to run. Methods are saved with the designator 8081 followed by two letters that are sequentially increased for each new calibration generated. (e.g: 8081AA, 8081AB, 8081AC ...) ***Note that the ID of this new method is recorded in the Method column of the Run Logbook.***

ESS Laboratory. This document may be reproduced solely for internal use.

8.5.10.3 Convert and link all Chemstation data files to EnviroQuant files.

8.5.10.4 Load the Pesticide Level-4 standard file. Go into QEDIT and correctly integrate all of the pesticides. The following is the order of elution for the individual analytes:

Elution Order RTX-CL Pest.	Elution Order RTX-CL Pest. II	Compound	Elution Order RTX-CL Pest.	Elution Order RTX-CL Pest. II	Compound
1	1	TMX (Surr.)	14	13	Endosulfan I
2	2	Hexachlorobenzene	15	15	Dieldrin
3	3	a-BHC	16	16	Endrin
4	4	g-BHC	17	17	4,4'-DDD
5	5	b-BHC	18	18	Endosulfan II
6	6	d-BHC	19	19	4,4'-DDT
7	7	Heptachlor	20	20	Endrin Aldehyde
8	9	Aldrin	21	22	Methoxychlor
9	8	Alachlor	22	21	Endosulfan Sulfate
10	10	Heptachlor Epoxide	23	23	Endrin Ketone
11	11	g-chlordane	24	24	DCB (Surr.)
12	12	a-chlordane			
13	14	4,4'-DDE			

8.5.10.5 Go into the initial calibration and update the absolute retention times and responses.

8.5.10.6 For Levels 1,2,3,5, 6, and 7 update only the responses. ***After generating the initial calibration curve in Enviroquant, the analyst must visually check that each calibration standard was entered into the new calibration method. This is accomplished by checking that the area response for one compound from each calibration standard's printout corresponds to the area count listed in the calibration method in Enviroquant***

8.5.10.7 The software is set up to calculate the average response factor from the 7-level curve (Section 9.0). The percent relative standard deviation of the response factor in each of the 7-levels must be less than 20% and a minimum of 5 points must be used. (Note: the requirement for method 608 is 10% RSD and a minimum of 3 points can be used), (SM 6630C is 20%RSD). If any of the pesticides are outside of this criterion, check the data setup in the EnviroQuant software and review the integration of each of the 7-levels. If manual integrations need to be made, update responses again.

8.5.10.8 When updating responses, all peaks in each level should fall within the retention time windows established according to section 8.6. If the peaks have drifted outside of the retention time windows, then the initial calibration is not acceptable. This peak drift is usually due to a carrier gas leak or clog in a gas line. Most leaks come from the injection port. To correct a leak, start by tightening all connections, including the column nut, gold seal, and insert retainer nut. If this doesn't work, go to section 19.0 and replace the ferrule, the septa, and the o-ring. In some cases, the gooseneck liner will get clogged with a piece of septa. Inspect the liner for pieces of septa. If the problem persists, consult with

UNMASTER

supervisor or a service representative. Once the problem has been corrected, reanalyze the entire initial calibration.

8.5.10.9 For those analytes of interest that continue to be greater than 20% RSD (10% for 608, 20% for SM), use a linear calibration or non-linear calibration (quadratic regression). The linear calibration is a regression equation that does not pass through zero. See Calculations in section 9.0. The instrument response is treated as the dependent variable (y) and the concentration as the independent variable (x). The regression will produce the slope and intercept terms for a linear equation in the form:

$y = ax + b$

Where,

y= instrument response (peak area)
a= Slope
x= Concentration
b= intercept

8.5.10.9.1 The regression calculation will generate a coefficient of determination that is a measure of the 'accuracy of fit' of the regression line to the data. In order to be used for quantitative purposes, the calibration curve must have a correlation coefficient of $r \geq 0.995$ or coefficient of determination of $r^2 \geq 0.99$. A minimum of five consecutive points are needed for average response or linear regression. A minimum of six consecutive points are needed for quadratic regression. The analyst should select the regression order that introduces the least calibration error into the quantitation. *The maximum allowable %RSD for each target analyte is 40%. Refer to **Attachments C and E** for further details.*

8.5.10.10 Document all maintenance performed in the instrument log.

8.5.10.11 Once all integrations are correct, the %RSD is less than 20% (10% for Method 608), $r \geq 0.995$ or $r^2 \geq 0.99$ and all standards are within the RT windows, save the method.

8.5.10.12 After the initial calibration has been generated, the analyst must create a copy of the 10 ppb standard and quantitate the file with the new calibration. Review of the analyte recoveries in the standard will demonstrate the appropriateness of the calibration curve.

8.5.10.13 Analysis of a second source calibration verification standard is performed immediately after initial calibration (7.2.4.2). Acceptance criterion is 80-120% with no exceptions.

MASTER

8.6 Retention Time Windows

8.6.10 Retention time windows are central to the identification of target compounds. Absolute retention times are used for compound identification in all GC and HPLC external standard methods. Retention time windows are established to compensate for minor shifts

ESS Laboratory. This document may be reproduced solely for internal use.

in absolute retention times as a result of sample loadings and normal chromatographic variability. The width of the retention time window should be carefully established to minimize the occurrence of both false positive and false negative results.

8.6.11 Determining Retention Time Windows:

8.6.11.3 Before establishing retention time windows, make sure that the chromatographic system is operating reliably and that the system conditions are optimized for the target analytes and surrogates in the sample matrix to be analyzed.

8.6.11.4 Make three injections of the mid-range CCV single component standard mixtures and multi-component analytes (Toxaphene and Chlordane) over the course of a 72-hour period. Serial injections or injections over a period of less than 72 hours may result in retention time windows that are too tight.

8.6.11.5 Record the retention time in minutes for each single component analyte and surrogate to three decimal places. Calculate the mean and standard deviation of the three absolute retention times for each single component analyte and surrogate. For multi-component analytes, calculate the mean and standard deviation of three to five peaks used for calibration or identification.

8.6.11.6 If the standard deviation of the retention times for a target compound is 0.000 (i.e., no difference between the absolute retention times), then use a default standard deviation of 0.01 minutes. The width of the retention time window for each analyte, surrogate, and major constituent in multi-component analytes is defined as ± 3 times the standard deviation of the mean absolute retention time established during the 72-hour period or 0.03 minutes, whichever is greater.

8.6.11.7 Establish the center of the retention time window for each analyte and surrogate by using the absolute retention time for each analyte and surrogate from the mid-range CCV (Level 4 standard) at the beginning of each analytical shift. For samples run during the same shift as an initial calibration, use the retention time of the mid-point standard of the initial calibration.

8.6.11.8 Absolute retention time windows must be calculated for each analyte and surrogate on each chromatographic column and instrument used.

8.6.11.9 New retention time windows must be established when a new GC column is installed or when GC column has been shortened during maintenance.

8.6.11.10 Surrogates are added to each sample, blank, QC sample and calibration standard. Surrogate retention times in the calibration standards are useful in tracking retention time shifts. Whenever the observed retention time of a surrogate is outside of the established retention time window for standards, the analyst is advised to determine the cause and correct the problem before continuing analyses.

MASTER

8.7 **Sample Analysis**: Once the initial calibration has passed all of the quality control criteria, sample analysis may begin. All samples and standards must be run under the same conditions as the initial calibration.

8.7.10 **Sequence of Analysis:** At the beginning of each 12-hour shift, the PEM must be successfully analyzed. Samples cannot be analyzed more than 12 hours after the first PEM standard is injected and no more than 20 samples can be analyzed within the 12 hour period. Immediately after the PEM and prior to sample analysis the initial calibration must be verified with the mid-range CCV (Level 4 working standard). Samples are immediately analyzed after the CCV. Samples include the method blank, blank spikes, samples, matrix spikes, and matrix spike duplicates. **NOTE: When analyzing for DoD or Method 608, a CCV must be analyzed after every 10 field samples and at the end of each analytical sequence**. The CCV alternates between the Pesticide Level 2 and 4 standards.

> *NOTE:* 1) ***Analysis of a second source calibration verification standard is performed immediately after initial calibration in place of the CCV.*** 2) ***It is not acceptable practice to group QC samples together and/or to analyze QC samples on one instrument and their associated samples on another instrument. Analyst must try to analyze batch QC samples, as capacity allows, along with their associated field samples.***

8.7.11 **Loading calibration verification standards and samples**: See section 8.5.4.

8.7.12 **Log Book entries**: See section 8.5.5.

8.7.13 **Running Continuing Calibration Standards and Samples with Chemstation Software:** See section 8.5.8

8.7.14 **Reviewing Continuing Calibration Standard and Sample data:** All GC Chemstation data is reduced with the Enviroquant Software. (Refer to Hewlett Packard's EnviroQuant Operators Manual)

8.7.14.3 Update the Method with Continuing Calibration standards:

8.7.14.3.1 Open the Enviroquant Icon on the computer connected to the instrument that ran the samples and standards.

8.7.14.3.2 Load the method with the initial calibration data that corresponds to the samples and standards analyzed. See section 8.5.9.11. Usually this is the last method entered into the logbook.

MASTER

8.7.14.3.3 Convert all Chemstation files to Enviroquant Files.

ESS Laboratory. This document may be reproduced solely for internal use.

8.7.14.3.4 Load the CCV standard that ran just prior to the first sample set up in the analytical sequence. Go into QEDIT and correctly integrate all of the pesticides. Go into the initial calibration and update the absolute retention times only. **Do not update responses!** The order of the pesticide elution for each of the columns is listed in section 8.5.10.4. The CCV standard should only have 22 predominant peaks. If there are more or less than 22 peaks then refer to the following corrective action and reanalyze all standards.

Problem	Corrective Action
Wrong standard injected	Check sequence setup section 8.5.4. Make sure standards are correctly placed on tray.
Contaminated standard	Inject another aliquot of standard or remake standard.
Standard prepared incorrectly	Remake standard
Dirty injection port	Perform maintenance. Refer to section 19.0

8.7.14.3.5 Save the updated method.

8.7.14.4 Reviewing the Continuing Calibration Standards:

8.7.14.4.1 Use the method updated in section 8.7.5.1.5 to analyze (calculate and generate report) the calibration standards which ran before and after the samples of interest.

8.7.14.4.2 If the retention times have shifted outside the retention time window, see section 8.6. If there is high breakdown, perform the maintenance in section 19.0.

8.7.14.4.3 The CCV standards must be injected at intervals of not less than once every 12 hours or 20 samples (10 field samples for DoD and method 608) and at the end of the analysis sequence. Note: every 10 samples is recommended to minimize the number of samples requiring re-injection when QC limits are exceeded. Concentration levels must alternate between low and high concentration standards (equivalent to second and fourth levels in calibration curve). See calculations in section 9.0. Acceptance criteria are as follows:

MASTER

Routine Analysis	Percent difference/drift $\leq$20% for all reported analytes
DoD	-Percent difference/drift $\leq$ 20% for all reported analytes

ESS Laboratory. This document may be reproduced solely for internal use.

MCP CAM	-Percent difference/drift $\leq$20% for all reported analytes
608 / SM6630C	Percent difference/drift <15% for all reported analytes

8.7.14.4.4 The breakdown in the PEM standard must meet criteria in Section 8.5.5. All of the retention times must also be within the established Retention Time windows (see section 8.6). When these criteria are exceeded, inspect the gas chromatographic system to determine the cause and perform whatever maintenance is necessary before verifying calibration and proceeding with sample analysis. (See section 19.0) If routine maintenance does not return the instrument performance to meet the QC requirements based on the last initial calibration, then a new initial calibration must be performed.

8.7.15 Sample injection may continue for as long as the calibration verification standards and standards interspersed within the samples meet the QC requirements. The sequence ends when the standard that follows a set of samples has been injected or when qualitative and/or quantitative QC criteria are exceeded.

8.7.16 When analyzing samples for multiple component pesticides (Chlordane and Toxaphene), any hits must be verified with a mid-level standard analyzed within 12 hours of the sample. The calibration factors of these analytes must be less than 20% difference when compared to the initial calibration. (<15%D for 608 and SM6630C) The retention times must also be within the established RT windows.

8.8 Sample Data Reduction:

8.8.10 All samples bracketed within acceptable calibration standards are analyzed by the same method used to analyze the standards. Through EnviroQuant, a quantitation report and chromatogram is generated for each sample.

8.8.11 The EnviroQuant software will tentatively identify a single component pesticide when a peak from a sample extract falls within the daily retention time window.

8.8.12 The analyst must carefully review the chromatograms, in QEdit, to ensure that all peaks were identified correctly.

8.8.12.3 Each blank, blank spike, blank spike duplicate, sample, matrix spike, and matrix spike duplicate should have surrogates identified. If the surrogate has not been identified, go into Qedit and integrate the peak in the surrogate retention time window. In some cases, surrogates cannot be identified due to interferences from unknown components that elute at the same time as the surrogate (see section 11.0 for out of criteria corrective

MASTER

action). This must be noted in the case narrative. If the surrogates are outside the retention time window, then the retention times have shifted. If this happens, the sample must be re-analyzed. Oily samples can cause a retention time shift. These samples will need to be diluted at least 1:2 prior to analysis.

8.8.12.4 The analyst must also review the baseline on all the sample and standard chromatograms. A baseline rise will result from contamination of the injection port and column. When the baseline interferes with sample and standard analysis, re-analyze samples and standards. Attempt to isolate the sample or samples that contaminated the system. Perform cleanup procedure or dilute these samples, if possible, before re-analysis.

8.8.12.5 Late eluting compounds can carryover from sample to sample or sample to standard. Large unresolved peaks in a sample are a good indication of carryover. If carryover occurs, first identify the sample that is causing the carryover. Rerun samples with carryover contamination. Run instrument blanks, consisting of clean hexane, after the sample that carried over until carry over is eliminated. In cases when carry over is too great, the sample may need to be cleaned up further or diluted.

8.8.13 The on-column concentration of each analyte in the sample is provided on the quantitation report. The concentration is in ng/ml. The concentration is calculated from the average response factor or line equation from the initial calibration, which ran prior to analysis.

8.8.14 To quantitate a pesticide analyte, the concentration must be greater than or equal to the MDL. If the analyte concentration is below the MDL then it cannot be reported as detected.

8.8.15 If the analyte concentration is above the MDL and below the level 7 concentration standard, then the result is tentative and must be confirmed.

8.8.16 If the analyte concentration is above the level 7 concentration, then dilute the sample to bring the concentration of the analyte to within the level 1 and level 7 range.

8.8.17 Confirm pesticide by performing the same analysis on a different column. If the sample was initially analyzed on an RTX-CL1 Pesticide column and there was an analyte detected above the method detection limit, the sample must be confirmed on an RTX-CL2 Pesticide Column. The reverse also holds true.

8.8.18 Analyte results are considered confirmed when there is a peak within the retention time window for the analyte on both the primary and confirmation columns **and** both results are above the MDL.

MASTER

8.8.19 The final result is determined by comparing the initial analysis with the confirmation analysis.

8.8.19.3 When an analyte result is within calibration range, the primary column result is compared to the confirmation result. If the RPD< 40%, then the higher result is reported. If the RPD > 40%, the

ESS Laboratory. This document may be reproduced solely for internal use.

analyst must evaluate the chromatogram for co-eluting peaks. If no co-elution is detected and all other QC is within criteria, report the higher result. If co-elution was present, the analyst is to report the result without co-elution and an explanation is to be provided in the case narrative.

8.8.19.4 If the confirmation results are at a concentration greater than the level 7 standard, then a dilution must be made. The sample dilution is analyzed. The criterion stated in 8.8.10.1 is applied to the two results.

8.8.19.5 ESS Laboratory will, upon request, report analytes results to the MDL. Analyte results between the MDL and RL have a greater uncertainty in concentration than results within the calibration range and will be J-flagged as estimated.

8.8.20 Identification of mixtures (i.e., Toxaphene and Chlordane) is based on the characteristic "fingerprint" retention time and shape of the indicator peak(s). Quantitation is based on the area under the characteristic peaks as compared to the area under the corresponding calibration peak(s) of the same retention time and shape generated using external calibration procedures.

8.9 Quantitation of Multiple Component Analytes:

8.9.10 Multi-component analytes present problems in measurement. Suggestions are offered in the following sections for handing Chlordane and Toxaphene.

8.9.11 Initial calibration for routine analysis will consist of a one point calibration at the mid point of the calibration curve.

8.9.12 Chlordane is a technical mixture of at least 11 major components and 30 or more minor components. *Trans-* and *cis*-Chlordane are the two major components of technical Chlordane. However, the exact percentage of each in the technical material is not completely defined, and is not consistent from batch to batch. *NOTE: ESS Laboratory calibrates for both alpha- and gamma-chlordane when analyzing pesticides. Both compounds are present in technical chlordane. Therefore, if neither compound is present in the vsample extract the laboratory has proof that the sample is non-detect for technical chlordane and will not recalibrate the sample file with the technical chlordane method.*

8.9.12.3 The GC pattern of a Chlordane residue may differ considerably from that of the technical standard. Depending on the sample substrate and its history, residues of Chlordane can consist of almost any combination of constituents from the technical Chlordane, plant and/or animal metabolites, and products of degradation caused by exposure to environmental factors such as water and sunlight.

MASTER

ESS Laboratory. This document may be reproduced solely for internal use.

8.9.12.4 Whenever possible, if Chlordane residue does not resemble technical Chlordane, the analyst should quantitate the peaks of alpha -Chlordane, gamma-Chlordane, and Heptachlor separately against the appropriate reference materials, and report the individual residues.

8.9.12.5 When the GC pattern of the residue resembles that of technical Chlordane, the analyst may quantitate Chlordane residues by comparing the total area of the Chlordane chromatogram using 3-5 major peaks. The peaks are quantitated individually and the average concentration is reported as the result.

8.9.4 When the GC patterns resemble Toxaphene, the analyst will quantitate the chromatogram using the average of five peaks (EPA method 8081B, Section 11.6.1.3.3 allows for the use of a subset of 4–6 peaks) in the sample chromatogram, which must be compared to that of the standard to ensure that all of the major components in the standard are present is the sample. Otherwise, the sample concentration may be significantly underestimated. The use of 4 to 6 peaks provides results that agree well with the total peak area approach and may avoid difficulties when interferences with Toxaphene peaks are present in the early portion of the chromatogram from compounds such as DDT.

9 CALCULATIONS

9.5 Calculate pesticide soils as follows:

$$\text{Pesticide Result ug/Kg} = \frac{\text{(Concentration of Peak ppb)(Extract Volume ml)(Dilution)}}{\text{(\% Solid/100)(Weight of Sample Measured g)}}$$

NOTE: For multi-component pesticides (Chlordane and Toxaphene) use average concentration of 3-5 peaks for Chlordane and total area for Toxaphene.

9.6 Calculate pesticide aqueous as follows:

$$\text{Pesticide Result ug/L} = \frac{\text{(Concentration of Peak ppb)(Extract Volume in ml)(Dilution)}}{\text{Volume of Sample in ml}}$$

NOTE: For multi-component pesticides (Chlordane and Toxaphene) use average concentration of 3-5 peaks for Chlordane and total area for Toxaphene.

9.7 Calculate pesticide matrix spike recoveries as follows:

MASTER

9.7.10 Matrix spike added is calculated as follows:

$$\text{Matrix Spike Added} = \frac{\text{(Concentration of Spike)(Volume of Spike Added)}}{\text{Initial Volume}}$$

ESS Laboratory. This document may be reproduced solely for internal use.

NOTE: Initial volume can be in liters or grams. If it is a soil, make sure to multiply initial volume by % solids/100.

9.7.11 Matrix spike result is calculated as follows:

9.7.11.3 (Refer to Section 9.1, 9.2, 9.3 and 9.4.)

9.7.12 Matrix spike % recovery is calculated as follows:

$$\% \text{ Recovery} = \frac{\text{Matrix Spike Result} - \text{sample result}}{\text{Matrix Spike Added}} \times 100$$

9.8 Calculate percent breakdown as follows (for DDT and Endrin):

$$\% \text{ Breakdown for 4,4'-DDT} = \frac{\text{Total DDT Degradation Peak Area (DDE + DDD)}}{\text{Peak Area (DDT + DDE + DDD)}} \times 100\%$$

$$\% \text{ Breakdown Endrin} = \frac{\text{sum of degradation peak area (Aldehyde + Ketone)} \times 100\%}{\text{sum of all peak area (Endrin + Aldehyde + Ketone)}}$$

9.9 For surrogate recoveries, % RSD and all other calculations done by the computer's software refer to Hewlett Packard © 1992 printed in USA 11/92 Part No. HP G1032-90020.

9.10 Calibration Factor (CF)

$$CF = \text{Peak Area} / \text{Mass of Compound Injected}$$

9.11 Percent Relative Standard Deviation:

$$\% RSD = (SD / \text{Average CF}) \times 100\%$$

Where: SD = standard deviation

9.12 Percent Difference:

$$\% D = ((CFv - CF\ ave) / CF\ ave) \times 100\%$$

Where:
CFv = Calibration Factor of the verification standard.
CF ave = The mean calibration factor from the initial calibration.

MASTER

9.13 Percent Drift:

$$\% \text{ Drift} = \frac{\text{Calculated Concentration} - \text{Theoretical Concentration}}{\text{Theoretical Concentration}} \times 100\%$$

ESS Laboratory. This document may be reproduced solely for internal use.

10 QUALITY ASSURANCE/QUALITY CONTROL

10.5 Immediately after the initial calibration, a second source standard (ICV) is analyzed. This standard is prepared at the Level 4 concentration. The percent recovery of the second source must be 80-120%. If the percent recovery is outside criterion, then corrective action must be taken. Perform instrument maintenance and/or prepare a new second source standard. If the second analysis of the ICV is not within criterion, then a new calibration curve must be generated. **Sample analysis cannot begin until a valid second source has been analyzed.**

10.6 **Accuracy and Precision**: All laboratory personnel must demonstrate initial proficiency for each sample preparation method/matrix that he or she performs. All new employees must successfully demonstrate initial proficiency prior to independently performing analysis on real samples. This must be accomplished by generating data of acceptable accuracy and precision for target analytes in a clean matrix. The initial proficiency results will become part of each employee's training file.

QC Sample Preparation:

Spiking Solution: Four QC samples must be prepared from a spiking solution with the analytes of interest. The spiking solution must be made using standards **prepared independently from those used for calibration**. The samples must be prepared at a concentration that would result in data falling within the middle of the calibration curve. In most cases the blank spike or matrix spike solution is used. Prep: The samples are prepared in a clean matrix. In most cases this initial demonstration will simply be a matter of preparing four blank spikes with a batch of samples.

QC Sample Analysis: The four QC samples must be analyzed within the criteria of the method being evaluated. The QC samples must be handled in exactly the same manner as actual samples.

Accuracy Calculation: Accuracy is defined as the closeness of agreement between an observed value and an accepted reference value. Each of the four spiked samples will be calculated for percent recovery. The average of the percent recovery values is the accuracy result.

Precision Calculation: Precision is defined as the agreement of a set of replicate measurements without assumption of knowledge of the true value. Precision is estimated by the relative standard deviation (RSD) of the four QC samples.

$$\%RSD = (s / x)\ 100\ \%$$

MASTER

Where:

ESS Laboratory. This document may be reproduced solely for internal use.

s = Standard Deviation of a finite number of values. On a scientific calculator use the **σxn-1** key.

$\bar{x}$ = The average of the four QC sample % recoveries.

Reporting Accuracy and Precision: Report Accuracy and Precision data with the following minimum info:

Matrix: Prep Method:
Clean-up Method: Analysis Method:
Date Extracted: Date Analyzed:
Sample Prepared by: If Applicable
Sample Fractionated by: If Applicable Sample Analyzed by:
Accuracy: Precision:

Parameter	*% Rec. QC 1*	*% Rec. QC 2*	*% Rec. QC 3*	*% Rec. QC 4*	*Average Recovery*	*Standard Deviation*	*%RSD*

Interpretation of Results: The percent recoveries should be between 50-130% and the %RSD should be less than 30%. If any of the accuracy and precision results do not fall within the criteria then re-prep and re-analyze all QC samples only for those analytes that were not within criteria.

10.7 A Method Blank is extracted with each 20 samples or analytical batch. The concentration of analytes in the method blank should be less than the MRL (½ MRL for Method 608; MRL is the Level 1 standard). If the concentration of any analyte exceeds the MRL or ½ MRL (608), then proceed to Section 11.0 for corrective action.

10.8 Run a 7-point initial calibration curve (Method 8081 allows 5 point minimum, Method 608 allows a minimum of 3 points), using the primary source standards each time major instrument maintenance occurs, or if the CCV does not meet acceptance criteria. Acceptance criteria are ≤ 20% (≤ 10% for Method 608).

10.9 A Blank spike and Blank spike duplicate (BS/BSD) are analyzed with each batch of 20 or less samples. The acceptance criterion for the BS/BSD is 40-140% Recovery, 20% RPD for waters and 30% RPD of the certified value for soils. ***See Attachment B for 608 blank spike acceptance criteria and see Attachment E for MADEP MCP CAM requirements.*** If the BS/BSD is not within limits, see section 11.0 for corrective action. Sporadic Marginal Exceedance number is as follows:

10.10 Calculate surrogate standard recovery on all samples, blanks, and spikes. Determine if the recovery is within limits of 30-150%. Both surrogates on both columns must be within criterion. ***See Attachment E for MADEP MCP CAM requirements.***

10.10.10 If the same surrogate is outside limits on both columns, re-extract the sample.

ESS Laboratory. This document may be reproduced solely for internal use.
MASTER

10.10.11 If both surrogates are outside limits on one column only, then re-analyze the sample extract.

10.10.12 If a surrogate is diluted below the lowest calibration standard, no corrective action is necessary.

10.10.13 If re-extraction or reanalysis yields similar results, the laboratory must note this in the project narrative.

10.10.14 If re-extraction or reanalysis is performed within hold time and produce results within criterion, then only results from re-extraction or reanalysis needs to be reported.

10.10.15 For MADEP, if re-extraction or reanalysis is performed outside hold time and produce results within criterion, then both results from re-extraction or reanalysis should be reported.

10.10.16 Note all exceedances in project narrative.

10.11 Continuing calibration verification (CCV) must be performed at the beginning and end of each analytical sequence, see 8.7.5.2.3 for frequency/level of CCV. The CCV uses the Pesticide Level 2 and 4 standards, alternated throughout the analytical sequence.

10.12

Acceptance criteria is a follows:

Routine Analysis	Percent difference/drift $\leq$20% for all reported analytes
MCP CAM	-Percent difference/drift $\leq$20% for all reported analytes
608 / SM 6630C	Percent difference/drift $\leq$ 15% for all reported analytes

10.12.10 When a CCV is out of this acceptance window, the laboratory should stop analyses and take the following corrective action:

10.12.10.3 When criteria are exceeded then remake and re-analyze CCV If corrective action does not produce a second consecutive (immediate) CCV within acceptance limits, then the analyst may demonstrate the initial calibration is valid by analyzing two consecutive CCVs at two concentrations. If CCV criteria are not acceptable, then a new initial calibration must be performed. ***All samples analyzed after the last acceptable CCV must be re-analyzed except for CCVs that are exceeded high, samples with results that are non-detect may be reported. It has been shown that results would have been detected***

MASTER

10.12.10.4 When performing analysis for MA MCP, or DoD, any analyte outside of criteria in the CCV must be noted in the project narrative

10.13 The breakdown of DDT and Endrin must be measured before standards and samples are analyzed at the beginning of each 12-hour shift. Injector maintenance and re-calibration must be performed if the breakdown is greater than 15% for either compound (CAM). See section 8.5.6 for details. For calculation refer to Section 9.0.

10.14 A matrix spike and matrix spike duplicate (MS/MSD) are analyzed with every batch of 20 samples (Method 608 - every 10 samples). The acceptance limits 30-150% Recovery and ± 30% RPD. ***See Attachment E for MADEP MCP CAM requirements.*** If the blank spike (BS/BSD) results are acceptable and the matrix spike/matrix spike duplicate results are outside of QC limits, note exception in case narrative.

10.15 Control charts are generated quarterly for the BS (Soil and Water)

10.16 MDLs are determined in reagent water and Ottawa sand/sodium sulfate and verified annually. See SOP 110_0013 for complete MDL study instructions. (Project-specific requirements may require that the MDL study be performed in the site-specific matrix.).

11 DATA VALIDATION

11.5 Data validation will be accomplished by reviewing all of the quality control parameters and assuring that they are within recommended ranges by completing the SVOA Analysis Map (see Section 11.3) for GC/ECD Chlorinated Pesticides. The only exceptions made to ranges would be the following:

11.5.10 For MS/MSD, the RPD should be ±30% (***see Attachment E for MADEP MCP CAM requirements***). However, there are cases where duplicates may not work. If this is the case, inform client in narrative concerning sample non-homogeneity.

11.5.11 For matrix spikes, the % Recovery should be 30-150% ***(see Attachment E for MADEP MCP CAM requirements)***. If the matrix spike is outside limits, check the BS/BSD. If the BS/BSD is within limits, matrix interferences are present and should be noted in the narrative.

11.5.12 Analytical batches with Method blanks above the MRL will be re-prepped and re-analyzed with the following exceptions:

11.5.12.3 Samples that are at least twenty times higher than the method blank may be reported.

MASTER

ESS Laboratory. This document may be reproduced solely for internal use.

11.5.12.4 When the method blank is less than 5% of the regulatory limit associated with the analyte the method blank would be acceptable.

11.5.12.5 If the analyte is found in the method blank above the MRL but is not in any of the associated samples, no corrective action is needed.

11.5.12.6 Any results that are reported with method blank contamination must be B-flagged.

11.5.13 For the BS/BSD, the %Recovery should be 40-140% ***(see Attachment B for Method 608 and Attachment E for MADEP MCP CAM requirements***). If the BS/BSD is outside this criteria, the analytical batch will be re-extracted and re-analyzed with the following exceptions:

11.5.13.3 For BS/BSD >140% ***(see Attachment E for MADEP MCP CAM requirements)***, samples with results below the MRL may be reported. It has been shown that the results above MRL would have been detected.

11.5.13.4 For BS/BSDs < 40% samples with results above a regulatory limit may be reported.

11.5.13.5 In some instances there may be insufficient sample to re-extract. The client is to be contacted and the results, if reported, are to be reported as estimated values when this occurs.

11.5.13.6 Any samples that are reported with invalid BS/BSD data must have a notation in the case narrative.

11.6 All unusual observations and method deviations will be noted in the narrative accompanying the data report presented to the client.

11.7 All data is reviewed for accuracy by a second analyst. Results of this review are noted on the Run Log.

12 REFERENCES

12.5 SW846, Third Edition, Updates III and IV, Methods 8081A and B. .

12.6 HP GC EnviroQuant User's Guide, HPG1045A

12.7 HP Environmental Data Analysis User's Guide HPG0032C

12.8 HP 6890 GC and HP 5890 Series II Operations Manuals

MASTER

ESS Laboratory. This document may be reproduced solely for internal use.

12.9 Standard Methods, 19th/20th Editions, Method No 6630 C.

12.10 Massachusetts DEP WSC-CAM V B.

12.11 Deleted.

12.12 TNI Standard: Volume 1, Module 2 and Volume 1, Module 4.

13 ATTACHMENTS

13.5 Attachment A – Deleted

13.6 Attachment B – Specific QC Requirements for EPA Method 608

13.7 Attachment C – Summary of Method Quality Objectives.

13.8 Attachment D – Chemstation method.

13.9 Attachment E – Specific QC Requirements for Mass MCP WSC-CAM-V B.

14 POLLUTION PREVENTION and WASTE MANAGEMENT

14.5 ESS Laboratory's policies on pollution prevention and waste management are covered in SOP 90_0002, Hazardous Waste Contingency and Emergency Response Plan. All employees are trained in the requirements of the SOP.

15 METHOD PERFORMANCE

15.5 Precision and Accuracy data must be generated by all employees before performing this analysis on client samples. The data is generated by analyzing a method blank and four blank spike samples. Acceptance criteria are 50-130% Recovery and %RSD of ≤ 30%.

15.6 The precision and accuracy data in Table 1 were developed using the Soxtherm extraction method. Values are in ug/L.

16 TABLES, DIAGRAMS, FLOWCHARTS, AND VALIDATION DATA

Table 1. Typical Precision and Accuracy data generated 6/1/2005

Compound	Spk	Avg	%Rec	%RSD	Compound	Spk	Avg	%Rec	%RSD
4,4'-DDD	50	55.177	110.4	5.7	Endosulfan Sulfate	50	52.684	116.6	5.6
4,4'-DDE	50	56.231	112.5	6.5	Endrin Aldehyde	50	51.402	105.4	4.5
4,4'-DDT	50	62.526	125.1	6.0	Endrin Ketone	50	52.191	113.7	6.9
alpha-BHC	50	50.965	106.6	7.6	gamma-BHC (Lindane)	50	52.584	102.8	5.4
alpha-Chlordane	50	60.291	101.9	9.4	gamma-Chlordane	50	58.635	104.4	4.4
beta-BHC (1)	50	53.577	120.6	6.5	Heptachlor	50	54.870	105.2	8.6

ESS Laboratory. This document may be reproduced solely for internal use.

MASTER

Decachlorobiphenyl	50	34.056	107.2	6.2	Heptachlor Epoxide	50	54.761	117.3	7.2
delta-BHC	50	52.437	68.1	3.1	Hexachlorobenzene	50	47.598	109.7	7.8
Dieldrin	50	57.653	104.9	6.7	Methoxychlor	50	59.114	109.5	7.0
Endosulfan I	50	58.857	115.3	6.3	Tetrachloro-m-xylen	50	41.102	95.2	7.9
Endosulfan II	50	58.316	117.7	7.3					

17 DEFINITIONS

17.5 **Accuracy**: The closeness of agreement between an observed value and an accepted reference value. When applied to a set of observed values, accuracy will be a combination of a random component and of a common systematic error (or bias) component.

17.6 **Batch**: A group of samples which behave similarly with respect to the sampling or the testing procedures being employed and which are processed as a unit. For QC purposes, if the number of samples in a group is greater than 20, then each group of 20 samples or less will all be handled as a separate batch.

17.7 **Bias**: The deviation due to matrix effects of the measured value (x_s - x_u) from a known spiked amount, where x_s is the spiked sample and x_u is the un-spiked sample. Bias can be assessed by comparing a measured value to an accepted reference value in a sample of known concentration or by determining the recovery of a known amount of contaminant spiked into a sample (matrix spike).

17.8 **Control Sample**: A QC sample introduced into a process to monitor the performance of the system.

17.9 **Equipment Blank**: A sample of analyte-free media which has been used to rinse the sampling equipment. It is collected after completion of decontamination and prior to sampling. This blank is useful in documenting adequate decontamination of sampling equipment.

17.10 **Method Reporting Limit**: The lowest concentration that can be reliably achieved within specified limits of precision and accuracy during routine laboratory operating conditions. The MRL is generally 5 to 10 times the MDL. ESS Laboratory sets the MRL to the lowest non-zero standard in the calibration curve or higher.

17.11 **Field Duplicates**: Independent samples which are collected as close as possible to the same point in space and time. They are two separate samples taken from the same source, stored in separate containers, and analyzed independently. These duplicates are useful in documenting the precision of the sampling process.

MASTER

17.12 **Blank Spike (BS)**: A known matrix spiked with compound(s) representative of the target analytes. This is used to document laboratory performance.

17.13 **Matrix**: The component or substrate (e.g., surface water, drinking water) which contains the analyte of interest.

ESS Laboratory. This document may be reproduced solely for internal use.

17.14 **Matrix Duplicate**: An intralaboratory split sample which is used to document the precision of a method in a given sample matrix.

17.15 **Matrix Spike**: An aliquot of sample spiked with a known concentration of target analyte(s). The spiking occurs prior to sample preparation and analysis. A matrix spike is used to document the bias of a method in a given sample matrix.

17.16 **Matrix Spike Duplicates**: Intralaboratory split samples spiked with identical concentrations of target analyte(s). The spiking occurs prior to sample preparation and analysis. They are used to document the precision and bias of a method in a given sample matrix.

17.17 **Method Blank**: An analyte-free matrix to which all reagents are added in the same volumes or proportions as used in sample processing. The method blank should be carried through the complete sample preparation and analytical procedure. The method blank is used to document contamination resulting from the analytical process.

17.18 **Method Detection Limit (MDL)**: The minimum concentration of a substance that can be measured and reported with 99% confidence that the analyte concentration is greater than zero and is determined from analysis of a sample in a given matrix type containing the analyte. See SOP 110_0013 for further explanation.

17.19 **Organic-Free Reagent Water**: All references to water in the method refer to water in which an interferant is not observed at the method detection limit of the compounds of interest. A water purification system is used to generate organic-free deionized water.

17.20 **Surrogate**: An organic compound which is similar to the target analyte(s) in chemical composition and behavior in the analytical process, but which is not normally found in environmental samples.

18 PERSONNEL QUALIFICATIONS

18.5 Analysts who perform this analysis must have a working knowledge of quantitative and qualitative analysis, instrumental methods of analysis, chemical laboratory methods, and equipment.

18.6 All analysts, before performing any analysis, participate in the ESS Laboratory training program (SOP80_0016). The training process consists of reading the Standard Operating Procedure, gaining instruction on the procedure from an experienced analyst, and performing the initial demonstration of capability.

MASTER

19 TROUBLESHOOTING

19.5 **Instrument Maintenance**: The following procedure is performed when the instrument is initially set up or when a continuing calibration has failed the QC criteria.

19.5.10 Set the GC system to room temperature.

19.5.11 Turn off oven.

19.5.12 Remove column by unscrewing the column in the injection port.

19.5.13 Remove septum nut and septa. Discard septa.

19.5.14 Remove the insert retainer nut. This will expose the O-ring and glass liner. Using a set of tweezers, remove O-ring and liner. If O-ring is not distorted then set aside for later use. Otherwise, replace O-ring. Remove the glass liner. Rinse liner with methanol and scrub with a cotton swab. If the liner is visibly stained, then replace with a new one.

19.5.15 With cotton swab dipped in methanol, clean the injection port and retainer nut.

19.5.16 Remove the gold seal nut located on the bottom of the injection port. With a cotton swab and methanol, clean the gold seal.

19.5.17 Replace all parts in the following order:

19.5.17.3 Gold seal nut. Hand tighten and 1/4 turn with wrench.

19.5.17.4 Insert clean or new glass liner.

19.5.17.5 Place O-ring over liner. Slide O-ring over and down the liner until it fits snug against the injection port.

19.5.17.6 Replace insert retainer nut.

19.5.17.7 Place a new green septa into insert retainer nut.

19.5.17.8 Replace septum nut. **Only hand tighten!**

19.5.17.9 Slide column nut and a new graphite ferrule over column.

19.5.17.10 Using a ceramic tile, cut 3-6 inches off the column. The cut must be square with no jagged edges.

19.5.17.11 Connect column to injection port by inserting 3 mm of column into the injection port and hand tighten column nut then adding 1/4 turn with a wrench.

MASTER

19.5.18 Make sure all gases are flowing. (Measure flows with bubble meter.) The flow should be between 5 and 6 ml/min.

19.5.19 Turn on injection port temperature.

ESS Laboratory. This document may be reproduced solely for internal use.

19.5.20 Set oven temperature to 120 °C and allow the system to stabilize. Bake out the oven at 300°C for two hours. Reset back to 120°C.

19.6 Record all maintenance in the instrument's maintenance logbook.

20 DATA MANAGEMENT AND RECORDS

20.5 Data Management - ESS Laboratory utilizes the Promium Element LIMS system as part of its Data Management system. Client sample information is entered into ELEMENT LIMS and analyses are assigned to each sample. The LIMS allows EPA hold times, minimum batch QC requirements, and QC criteria to be assigned to each analysis. Standards can be entered and assigned to QC samples through the LIMS. Once analysis has been performed, data is imported using DataTool avoiding manual errors. In conjunction with Crystal Reports, the ELEMENT system allows for a wide variety of reporting formats.

20.6 Records – The specific retention periods required in the NELAC Standards, EPA-CFR and state and local statutes are followed or exceeded. At a minimum, data records are retained for five years from last use (10 years for drinking water). If there is a question about whether a record should be retained or disposed because no specific requirement could be found, the record is retained until such time as a retention period is specified. Records are stored in specified-labeled locations and are easily retrievable. All raw data associated with testing is also retained including; computer printouts, chromatograms, review forms, and logbooks.

MASTER

ESS Laboratory. This document may be reproduced solely for internal use.

ATTACHMENT B - Specific Requirements for Method 608

QC Element	Frequency	Criteria	Corrective Action
Initial Calibration	Instrument set up. Each time the ICV or CCV cannot meet criteria.	• Minimum of 3 standards and contains all analytes • Low standard ≤ MRL • RSD≤10%, r≥0.995,r^2≥0.99	• No allowance. Perform maintenance and recalibrate.
ICV – second source verification standard	Immediately following initial calibration.	• %Rec = 80-120% • Must contain all target analytes. • No allowances	• If criteria are exceeded then remake and re-analyze ICV. If second consecutive ICV is within acceptable criteria then calibration is accepted, otherwise recalibrate. • Report exceedance in narrative
CCV	Prior to sample analysis, every 12 hours and every 10 field samples and at the end of each analytical sequence.	• Concentration level near midpoint of curve • Must contain all target analytes. • Percent difference or percent drift must be ≤ 15%	• If criteria are exceeded then remake and re-analyze CCV. If second consecutive CCV is within criteria then calibration is verified, otherwise re-calibrate system and re-analyze any sample analyzed after invalid CCV.
Method Blank	One per analytical batch of 20 or fewer samples.	• Matrix specific • Analytes < ½ MRL	• Report exceedance in the project narrative. • Any samples that are non-detect for that analyte may be reported. • Samples with concentrations that are 20x higher than the method blank may be reported. • Samples reported with a contaminated blank must be "B" flagged. • Re-extract if the above exceptions do not apply. If re-extract is within hold, report just the re-extracted data. If re-extract is outside hold then report both sets of data to client.
Blank spike/ Blank spike duplicate	Prior to sample analysis, every 12 hours and every 10 field samples and at the end of each analytical sequence.	• Prepared using standard source different than used for initial calibration • Concentration level should be between low and mid-level standard • Must contain all	• Report exceedance in the project narrative. • Re-extract if the above exceptions do not apply. If re-extract is within hold, report just the re-extracted data. If re-extract is outside hold then report both sets of data to client.

ESS Laboratory. This document may be reproduced solely for internal use.

		single component analytes • Matrix specific • Percent recoveries per Table 3 of Method 608.	
Matrix Spike/ Matrix Spike duplicate	Prior to sample analysis, every 12 hours and every 10 field samples and at the end of each analytical sequence.	• Prepared using the same source as the blank spike • Concentration between low and mid-level standard • Must contain all single component analytes • Matrix specific • Percent recoveries per Table 3 of Method 608.	• Check BS/BSD, if recoveries are acceptable then note exceedance in project narrative.

ESS Laboratory. This document may be reproduced solely for internal use.

Table 3 – ATTACHMENT C
Summary of Method Quality Objectives for Method 8081 Chlorinated Organic Pesticides

	Criteria	Corrective Action
before dards and	• %Breakdown must be ≤ 15 for Endrin and DDT • Evaluate using peak areas.	• Perform injection port maintenance until successful PEM is obtained
ıp. Each time √ cannot meet	• Minimum of 5 standards and contains all analytes • Low standard ≤ MRL • RSD≤20%, r≥0.995,r^2≥0.99 (Do not force through zero for LR). See section 8 for extended criteria. • For multi-component analytes: Analysis of a single standard at expected mid-point of calibration range. •	• No allowance. Perform maintenance and recalibrate.
llowing initial	• %Rec = 80-120% • Must contain all target analytes. • No allowances	• If criteria are exceeded then remake and re-analyze ICV. If second consecutive ICV is within acceptable criteria then calibration is accepted, otherwise recalibrate. • Report exceedance in narrative
analysis, and every 20 the end of sequence.	• Concentration level near midpoint of curve • Must contain all target analytes. • Percent difference or percent drift must be ≤ 20% • Concentration levels must alternate between low and high concentration standards (equivalent to second and fourth levels in calibration curve).	• If criteria are exceeded then remake and re-analyze CCV. If second consecutive CCV is within criteria then calibration is verified, otherwise re-calibrate system and re-analyze any sample analyzed after invalid CCV. ***Exception: If CCV is exhibiting high bias (concentration is higher than upper limit) then any samples that are non-detect for that analyte may be reported.***

MASTER

ɔroduced solely for internal use.

cal [redacted]ch of ıpl[redacted]	• Matrix specific • Analytes < MRL	• Report exceedance in the project narrative. • Any samples that are non-detect for that analyte may be reported. • Samples with concentrations that are 20x higher than the method blank may be reported. • Samples reported with a contaminated blank must be "B" flagged. • Re-extract if the above exceptions do not apply. If re-extract is within hold, report just the re-extracted data. If re-extract is outside hold then report both sets of data to client.
cal batch of ıples.	• Prepared using standard source different than used for initial calibration • Concentration level should be between low and mid-level standard • Must contain all single component analytes • Matrix specific • Percent recoveries between 40-140%. • Laboratories must develop in-house limits that are within above criteria. •	• Report exceedance in the project narrative. • Re-extract if the above exceptions do not apply. If re-extract is within hold, report just the re-extracted data. If re-extract is outside hold then report both sets of data to client.
cal batch of ıples	• Prepared using the same source as the blank spike • Concentration between low and mid-level standard • Must contain all single component analytes • Matrix specific • Recoveries between 30-150%. • RPD should be < 30% for single component analytes and < 50% for multi-component analytes.	• Check BS/BSD, if recoveries are acceptable then note exceedance in project narrative.

MASTER

ɔroduced solely for internal use.

mples and	• Use a minimum of 2 surrogates. • Percent recovery of 30-150%. • MCP requires that both columns and both surrogates be within criterion and reported. ***See Attachment E***	• If the same surrogate is outside of limits on both columns, re-extract samples. If both surrogates are outside criteria on one column only, re-analyze extract • If a surrogate is diluted to a concentration below the lowest standard, then no corrective action is needed. • If surrogates are outside criteria for re-extract, note in project narrative. • If re-extract is within hold and within criteria, report just the re-extracted data. If re-extract is outside hold then report both sets of data to client. • Note exceedance in project narrative. If sample is not re-analyzed due to obvious interference (e.g., UCM), the chromatogram is to be included in the final report.
	• Secondary column analysis: Laboratory must utilize a second dissimilar column to confirm positive pesticide results. • The lab must report the higher of the two results. • All QA/QC requirements must be met on secondary column as well. • Analytes must fall within retention time windows.	• Flag data that is >40% RPD between two columns. • IF high RPD can be attributed to interference on one of the two columns, the lab should report the lower value and provide a discussion in the case narrative that this approach was employed.

MASTER

produced solely for internal use.

ESS Laboratory
Division of Thielsch Engineering
Cranston, RI

SOP NO. 60_8082

ORGANOCHLORINE PCB's AS AROCLORS BY GAS CHROMATOGRAPHY: CAPILLARY COLUMN TECHNIQUE (EPA Method 608 and SW-846 METHODS 8082 and 8082A)

REVIEWED BY:

Operation Manager	Date 11/7/12
QA Manager	Date 11/7/12
Laboratory Director	Date 11/8/12

MASTER

Master marked in red. Controlled copies marked in green.

ORGANOCHLORINE PCB's AS AROCLORS BY GAS CHROMATOGRAPHY: CAPILLARY COLUMN TECHNIQUE (EPA Method 608/SW-846 METHODS 8082 and 8082A)

1.0 SCOPE AND APPLICATION

1.1 This procedure is used to determine the concentrations of various organochlorine polychlorinated biphenyls (PCBs) as Aroclors, in extracts from solid, aqueous and waste matrices. Open-tubular, capillary columns were employed with electron capture detectors (ECD).

1.2 Although performance data are presented for many of the compound chemicals, it is unlikely that all of them could be determined in a single analysis. This limitation results because the chemical and chromatographic behavior of many of these chemicals can result in co-elution. Several cleanup/fractionation schemes are provided in this procedure. Any compound is a potential method interference when it is not a target analyte.

1.3 Several multi-component mixtures (i.e., Aroclors) are listed as target compounds. When samples contain more that one multi-component analyte, a higher level of analyst expertise is required to attain acceptable levels of qualitative and quantitative analysis. The same is true of multi-component analytes that have been subjected to environmental degradation or degradation by treatment technologies. These result in "weathered" Aroclors (or any other multi-component mixtures) that may have significant differences in peak patterns than those of standards. In these cases, individual congener analyses may be preferred over total mixture analyses.

1.4 Compound identification (single component compounds) based on single column analysis should be confirmed on a second column, or should be supported by at least one other qualitative technique. This procedure describes analytical conditions for a second gas chromatographic column that can be used to confirm the measurements made with the primary column. GC/MS is also recommended as a confirmation technique if sensitivity permits.

1.5 This procedure has a reporting limit of 0.5 ug/L for aqueous samples and 50 ug/Kg for solid and waste samples. Lower detection limits are achievable by further concentration of sample extract upon request. Mass CAM required reporting limits are 0.25ug/L for aqueous samples (achieved with a 1ml final volume) and 100 ug/Kg soil (Assuming 100% solids).

2.0 METHOD SUMMARY

2.1 A measured volume or weight of sample (approximately 1 L for liquids, 2 g to 30 g for solids) is extracted using the appropriate sample extraction technique. Liquid samples are extracted at neutral pH with methylene chloride using a separatory

ESS Laboratory. This document may be reproduced solely for internal use.

funnel (SOP 50_3510). Solid samples are extracted with hexane-acetone (1:1) or methylene chloride-acetone (1:1) using either automate Soxhlet extraction (SOP 50_3541A) or Microwave Extraction method (SOP 50_3546). A variety of cleanup steps may be applied to the extract, depending on (1) the nature of the co-extracted matrix interferences and (2) the target analytes. After cleanup, the extract is analyzed by injecting a 1-ul sample into a gas chromatograph with a narrow- or wide-bore fused silica capillary column and electron capture detector (GC/ECD).

3.0 HEALTH AND SAFETY

3.1 Each employee has been trained and has acknowledged being trained in the safe use and handling of chemicals being used in the laboratory. This training has been performed according to the ESS Training SOP 80_0016 and by the Chemical Hygiene Plan, SOP No. 90_0001, in conjunction with the Safety orientation.

3.2 All sample and material handling should be done in a hood while using proper protective equipment to minimize exposure to liquid or vapor. Minimum personnel protective equipment includes the use of laboratory safety glasses, a lab coat or apron, and protective gloves.

3.3 The MSDs for the concentrated chemicals used in the area are kept on file in a central location that is available for the employees for review.

4.0 SAMPLE PRESERVATION, CONTAINERS, HANDLING AND STORAGE

4.1 Aqueous samples are collected in 1 Liter borosilicate glass jars with Teflon lined caps. The samples are stored in a dark walk-in cooler at 4° C. Two liters should be provided so samples can be re-extracted when necessary. ***Aqueous samples must be extracted within 7 days from date sampled.*** . If the samples will not be extracted within 72 hours of collection, the sample should be adjusted to a pH range of 5.0-9.0 with sodium hydroxide solution or sulfuric acid. Record the volume of acid or base used.

4.2 Soil / sediment samples are collected in 4 - 8 ounce jars with Teflon lined caps. The samples are stored in a dark walk-in cooler at 4° C. Thirty grams of sample is required for extraction and ten grams is required to determine the percent solids. One hundred grams should be provided so samples can be re-extracted when necessary. ***Soil / Sediment samples must be extracted within 14 days of date sampled (One year for MCP samples; indefinite for SW-846 samples).***

4.3 All extracts are stored in 2ml Teflon capped vials in the extract storage refrigerator located in the SVOA lab. These extracts are stored at 4°C and must be analyzed within 40 days of date extracted.

5.0 INTERFERENCES AND POTENTIAL PROBLEMS

ESS Laboratory. This document may be reproduced solely for internal use.

5.1 Sources of interference in this method can be grouped into three broad categories: (1) contaminated solvents, reagents or sample processing hardware; (2) contaminated GC carrier gas, parts, column surfaces or detector surfaces; and (3) the presence of co-eluting compounds in the sample matrix to which the ECD will respond. Interferences co-extracted from the samples will vary considerably from waste to waste. While general cleanup techniques are referenced or provided as part of this method, unique samples may require additional cleanup approaches to achieve desired degrees of discrimination and quantitation.

5.2 Interferences by phthalate esters introduced during sample preparation can pose a major problem in PCBs determinations. Common flexible plastics contain varying amounts of phthalate esters that are easily extracted or leached from such materials during laboratory operations. Cross-contamination of clean glassware routinely occurs when plastics are handled. Avoiding contact with any plastic materials and checking all solvents and reagents for phthalate contamination can best minimize interferences from phthalate esters.

5.3 Glassware must be scrupulously cleaned as soon as possible after use by rinsing with the last solvent used. Follow by detergent washing with hot water and rinses with tap water. Rinse with methanol and drain. Store dry glassware in a clean environment.

5.4 Cleanup by acid partitioning (SOPs 50_3665A/3665M) is suggested for PCB samples that are extremely contaminated with particulate and oxidizable organics.

5.5 It may be difficult to quantitate Aroclor patterns and single component PCBs together. Guidance on the identification of PCBs is given in Section 8.0.

6.0 EQUIPMENT/APPARATUS

6.1 **Gas chromatograph**: an analytical system complete with gas chromatograph suitable for on-column and split/split-less injection and all required accessories including syringes, analytical columns, gases, electron capture detectors (ECD) and DOS based PC system interfaced to the GC with HP Chemstation ND EnviroQuant software.

6.1.1 **Wide-bore Columns**:

6.1.1.1 **Column 1**: RTX-CL Pesticide column I. 30 m x 0.32 mm ID (or 0.53 mm ID, if needed; GCs -3, -6, -7) fused silica capillary column.

6.1.1.2 **Column 2**: RTX-CL Pesticide II column. 30 m x 0.32 mm ID (or 0.53 mm ID, if needed; GCs -3, -6, -7) fused silica capillary column.

6.1.1.3 Other 0.32mm ID column combinations may be used including a DB-608 with a DB-XLB.

MASTER

ESS Laboratory. This document may be reproduced solely for internal use.

6.1.2 **Miscellaneous Instrument Parts**:

6.1.2.1 Single Goose-neck glass liners from either HP or Restek.
6.1.2.2 Gold Seals and Washers (HP 05971-27305)
6.1.2.3 Graphite Ferrules (0.53mm.)
6.1.2.4 O-rings (HP #5180-4182)
6.1.2.5 HP ceramic tiles for cutting columns.

6.2 **10 ul** Glass bore Injector **Syringe**.

6.3 **Volumetric flasks** – Class A.

6.4 **Class A pipettes** – 5 ml, 8 ml, 25 ml.

6.5 **Sample vials**: glass with Teflon-lined crimp tops, 2.0ml.

6.6 **Syringes** -25 ul, 100 ul, 500 ul, and 1000 ul .

6.7 Teflon-lined crimp tops, 2.0ml

6.8 **Data system**:

6.8.1 **Computers:** The SVOA laboratory has various GC/ECD systems capable of analyzing method 608/8082. All computer systems are networked to a Windows 2012 R2 server, which is the destination for all files.

6.8.2 **Full/Differential/Incremental - daily backups** are incremental, weekly backups are differential, and monthly backups are full. We keep daily backups for 7 days, weekly backups for 7 weeks and monthly backups indefinitely.

6.9 **Software:** HP/Agilent Environmental Chemstation - The software is interfaced to an electron capture detector and allows the continuous acquisition and storage on machine-readable media of chromatograms obtained throughout the instrument program. The software integrates the abundance in any EICP between specified times. Current versions SVOA ECD5:G1045A 01.00, SVOA ECD1/3:G1045A C.01.00 and SVOA ECD6:G1701DA D.00.01.27.

7.0 REAGENTS AND STANDARDS

7.1 **Reagents**: All reagents should be reagent grade or pesticide grade for this analysis. Unless otherwise indicated it is intended that all reagents shall conform to specifications of the Committee on Analytical Reagents of the American Chemical Society, where such specifications are available. Other grades may be used provided

MASTER

ESS Laboratory. This document may be reproduced solely for internal use.

it is first ascertained that the reagent is of sufficiently high purity to permit its use without lessening the accuracy of the determination.

7.2 **Solvents**:
- 7.2.1 N-hexane
- 7.2.2 Methylene Chloride
- 7.2.3 Acetone

7.3 **Standards**: Store the standard solutions (stock, composite, calibration and surrogate) at 4° C in Teflon-sealed containers in the dark, with the exception of the primary surrogate, which is stored at room temperature to prevent crystallization. In the latter case, it has been determined that the rate of surrogate standards usage is such that no loss of analytes is experienced.

7.3.1 **Primary Standards**: Expiration dates of unopened/opened primary standards are as stated in SOP 50.0006 or as stated by the manufacturer,, whichever is earlier. Copies of the certificates of analysis are on file. These certificates detail the compounds in each of the mixes. Certificates are kept on file in the laboratory. The following primary standard solutions are purchased as certified solutions.Other vendors may be used.

Primary Standard	Manufacturer	Catalog #	Conc. (ug/ml)	Secondary Standard	Manufacturer	Catalog #	Conc. (ug/ml)
Aroclor 1016	Ultra	EPA-1282	1000	Aroclor 1016	Supelco	DP4 - 8097	1000
Aroclor 1221	Ultra	EPA-1292	1000	Aroclor 1221	Supelco	DP4 - 8098	1000
Aroclor 1232	Ultra	PP-301	100	Aroclor 1232	Supelco	DP4 - 4805	1000
Aroclor 1242	Ultra	PP-311	100	Aroclor 1242	Supelco	DP4 -4806	1000
Aroclor 1248	Ultra	PP-341	100	Aroclor 1248	Supelco	DP4 - 4807	1000
Aroclor 1254	Ultra	PP-351	100	Aroclor 1254	Supelco	DP4 - 4808	1000
Aroclor 1260	Ultra	EPA-1362	1000	Aroclor 1260	Supelco	DP4 -4809	1000
Aroclor 1262	Ultra	EPA-1372	1000	Aroclor 1262	Accustandard	C-262S-H-10X	1000
Aroclor 1268	Ultra	EPA-1382	1000	Aroclor 1268	Accustandard	C-268S-H-10X	1000
TMX/DCB Surr	Accustandard	CLP-032-R	200				

7.3.2 **Stock standards** are used to prepare multi-component standards. They are stored in 40 ml glass vials with Teflon lined caps for a maximum of one year from the date of preparation.

7.3.2.1 **Stock 1660 (1016/1260)**: 500 µl of each primary standard (Aroclor 1016 and 1260 from Ultra) and 100 µl of the surrogate mixture, is added to a 10 ml volumetric flask and diluted to the 10 ml mark with hexane.

ESS Laboratory. This document may be reproduced solely for internal use.

7.3.2.2 **Second Source Stock 1660 (1016/1260)**: 50 µl of each primary standard (Aroclor 1016 and 1260 from Supelco) and 10 µl of the surrogate mixture, is added to a 50 ml volumetric flask and diluted to the 50 ml mark with hexane (Final Conc 1016/1260 is 50,000µg/L & Surrogate is 2000 µg/L).

7.3.2.3 **Stock 1221, 1232, 1242, 1248, 1254, 1262, and 1268**: Each stock is prepared separately as follows: 0.5 ml of the primary standard (for 1221, 1262 and 1268 use 100µl) and 10 µl of the surrogate mixture is added to a 50 ml volumetric flask and diluted to the 50 ml mark with hexane (Final Conc Arochlors is 1000µg/L & Surrogate is 40 µg/L).

7.3.2.4 **Second Source Stock 1221, 1232, 1242, 1248, 1254, 1262, and 1268**: Each stock standard is prepared separately as follows: 50 uL of the secondary standard and 10 ul of the surrogate mixture is added to a 50 ml volumetric flask and diluted to the 50 ml mark with hexane. (Final Conc Arochlors is 1000µg/L & Surrogate is 40 µg/L).

7.3.2.5 **Surrogate Stock TCX/DCB**: 0.5 ml of primary standard (TCX/DCB Pest. /PCB Surrogate from Accustandard), is added to a 200 ml volumetric flask and diluted to the 200 ml mark with acetone. Final concentration of 0.5 ug/ml. Used as the surrogate spiking solution.

7.3.3 **Aroclor Working standards:** Store standards in 15 ml glass vials (2 ml target vials when 1 ml prepared) with Teflon lined caps. Standards expiration is six months. Concentrations should correspond to the expected range of concentrations found in real samples and bracket the linear range of the detector. They are used for the initial calibration procedure.

7.3.3.1 **Aroclor 1016 and 1260 (1660) Initial Calibration Standards**: The concentrations should correspond to the expected range of concentrations found in real samples and bracket the linear range of the detector. They are used for the initial calibration procedure. A set of 6 levels is prepared in volumetric glassware and diluted to mark with hexane. Working standards are prepared from the stock 1660 standard (7.3.2.1).

Level	Standard used	Initial Conc.	Amount added	Final volume	Final Conc.
1	stock 1660	Aroclor 50,000ug/L Surr. 2000 ug/L	25 ul	25.0 ml	Aroclor 50ug/L Surr. 2 ug/L
2	Stock 1660	Aroclor 50,000ug/L Surr. 2000 ug/L	50 ul	25.0 ml	Aroclor 100ug/L Surr. 4 ug/L
3	Stock 1660	Aroclor 50,000ug/L Surr. 2000 ug/L	250 ul	25.0 ml	Aroclor 500ug/L Surr. 20 ug/L
4	Stock 1660	Aroclor 50,000ug/L	1000 ul	50.0 ml	Aroclor 1000ug/L

ESS Laboratory. This document may be reproduced solely for internal use.

		Surr. 2000 ug/L			Surr. 40 ug/L
5	Stock 1660	Aroclor 50,000ug/L Surr. 2000 ug/L	800 ul	25.0 ml	Aroclor 1600ug/L Surr. 64 ug/L
6	Stock 1660	Aroclor 50,000ug/L Surr. 2000 ug/L	1000 ul	25.0 ml	Aroclor 2000ug/L Surr. 80 ug/L

7.3.4 **ICV/BS/BSD/MS/MSD Solution**: The spike solutions are prepared in Acetone as follows.

Analyte	Vendor	Initial Conc.	Amount Added	Final Volume	Final Conc.
Aroclor 1016 Aroclor 1260 or project specific Aroclor	Supelco	1000 ug/ml	2 ml each	200 ml	10 ug/ml

7.3.4.1 Surrogate solution (7.3.2.3) is added to each sample, method blank, blank spike, blank spike duplicate, matrix spike and matrix spike duplicate with a 1 ml calibrated syringe. See the appropriate extraction method for volumes.

7.3.4.2 The PCB ICV/BS/BSD/MS/MSD spike solution (7.3.4) is added to each blank spike, blank spike duplicate, matrix spike, and matrix spike duplicate with a 1 ml calibrated syringe. Unless otherwise requested by the client, ESS Laboratory uses the Aroclor 1660 spike mix. See the appropriate extraction method for volumes.

8.0 PROCEDURE

8.1 Extraction:

8.1.1 In general, water samples are extracted at a neutral pH (5.0-9.0; adjust as needed) with methylene chloride as a solvent using a separatory funnel (SOP 50_3510). Extract solid samples with methylene chloride-acetone (1:1) using the automated Soxhlet extraction (50_3541A) or ultrasonic extraction (SOP 50_3550) procedures. Oil samples are diluted with Hexane using the waste dilution extraction procedure (50_3580).

NOTE: 1:1 Hexane/acetone (replacing 1:1 methylene chloride-acetone) may be more effective as an extraction solvent for organochlorine PCBs in some environmental and waste matrices than is methylene chloride/acetone. Use of hexane/acetone generally reduces the amount of co-extracted interferences and improves signal/noise.

8.1.2 Spiked samples are used to verify the applicability of the chosen extraction technique to each new sample type. Each sample type must be spiked with the compounds of interest to determine the percent recovery and the limit of

ESS Laboratory. This document may be reproduced solely for internal use.

detection for that sample. See section 10.0 for guidance on demonstration of initial method proficiency as well as guidance on matrix spikes for routine sample analysis.

8.2 **Cleanup/Fractionation:**

8.2.1 Cleanup procedures may not be necessary for a relatively clean sample matrix, but most extracts from environmental and waste samples will require additional preparation before analysis. The specific cleanup procedure used will depend on the nature of the sample to be analyzed and the data quality objectives for the measurements.

8.2.1.1 When PCBs are to be measured in a sample, Acid Partitioning (SOPs 50_3665A/3665M) is recommended. This is followed with Sulfur Cleanup by Copper (SOP 50_3660) or GPC (SOP No. 50_3640A).

8.3 **Instrument Set Up**:

8.3.1 Typical operating conditions are as follows:

Inlet	EPC	Split/Splitless
Carrier gas	Helium	Hydrogen
Make-up gas	Nitrogen	Nitrogen
Head Pressure	6-7 psi	9 psi
Total Flow	70-100 ml/min	70-100 ml/min
Column Flow (0.32 column)	2-3 ml/min	2-3 ml/min
Detector Makeup Pressure	45-50 psi	45-50 psi
Detector Makeup Flow	50-60 ml/min	50-60 ml/min
Temperature program:		
Injector temperature	250°C	250°C
Detector temperature	320°C	320°C
Initial temperature/Time	130°C for 1 min	130°C for 1 min
Ramp	18°C/min	18°C/min
Final temperature/Time	310°C for 4 min	310°C for 4 min

Conditions may change; e.g. GC-5 uses Methane/Argon as a detector makeup gas.

8.4 **Initial Calibration**:

NOTE: When PCBs are to be quantitatively determined as Aroclors, the initial calibration consists of two parts:

ESS Laboratory. This document may be reproduced solely for internal use.

1) A standard containing a mixture of Aroclors 1016/1260 (1660) will include many of the peaks represented in the other seven Aroclor mixtures. Consequently, such a standard is used to demonstrate the linearity of the detector and that a sample does not contain peaks that represent any one of the Aroclors. This standard is also used to determine the concentrations of either Aroclor 1016 or 1260 when present in a sample. Therefore, an initial 6-point calibration is performed using the mixture of Aroclors 1660.

2) Standards of the other seven Aroclors are necessary for pattern recognition. These standards are also used to establish a single-point calibration factor for each Aroclor, after the Aroclor 1660 mixture has been used to describe the detector response. The standards for these seven Aroclors should be analyzed before the analysis of any samples, and may be analyzed before or after the analysis of the six 1660 standards.

8.4.1 ESS Laboratory's policy is that the audit trail on the Chemstation/Enviroquant software is always on. This ensures that any changes made to the instrument operating method be documented through the audit trail.

8.4.2 All acceptance criteria for initial and continuing calibration apply to both the primary and secondary columns.

8.4.3 **Priming the Column**: Once the chromatographic system operating conditions have been established, calibration may begin. Because of the low concentration of PCB standards injected on a GC/ECD, column adsorption may be a problem when the GC has not been used for a day or more. Therefore, the GC column may be primed or de-activated by injecting a PCB standard mixture approximately 20 times more concentrated than the mid concentration standard. Inject this standard mixture prior to beginning the initial calibration or calibration verification.

CAUTION: Carryover may be observed in the injection just following this system priming. Always run an acceptable blank prior to running any standards or samples.

8.4.4 **Loading the instrument**: All standards and samples are transferred with disposable pipettes into 2 ml target vials designed to fit the HP auto-sampler. The target vials are labeled with the ID of the standard or sample using a fine point marker. The tray on the auto-sampler is numbered 1-100. The instrument is set up with two independent injection systems, which means that the contents of one vial can not be injected into both injection ports at the same time. The 6-level standards are placed in slots 1-6. This is the standard setup for the calibration standards. Vials can be placed in different slots as long as the slot number is written in the logbook.

ESS Laboratory. This document may be reproduced solely for internal use.

8.4.5 **Log Book**: All samples set up on the instrument must be entered into the run logbook. All logbook entries are done prior to sample analysis. Logbooks consist of excel spreadsheets stored on the network. The logbook must be filled out completely with the date, vial number (slot number), computer file number, method number, ESS lab ID, and the initials of the analyst setting up the instrument.

8.4.5.1 Date includes the day, month, and year.

8.4.5.2 Vial number: This field has to be filled in for each entry.

8.4.5.3 Computer file ID is an abbreviation of the path and file associated with a particular vial number. (e.g. vial #3 analyzed on 3/12/05 has a computer file ID of 031205003)

8.4.5.4 The ESS Lab ID includes the ID of the standards, samples and all QC samples.

8.4.5.5 The Initials are signed by the analyst setting up the instrument.

8.4.5.6 The Comment section is a summary of calibration results, dilution information, and any unusual observations. (Ex.: carry over information into the sample, retention time shift, calibration standard is less than 15% Recovery, dilution information, CCV injection time, etc...)

8.4.5.7 The Method section is the method in the chromatographic software used to operate the instrument. All 6-level standards are injected like the sample using the instrument set-up criteria in section 8.3.

8.4.6 **Starting a run with Chemstation Software**: The GC is controlled through Chemstation. The methods are set up with the instrument set-up information from section 8.3. All of the operating parameters are saved in Chemstation under method file ID's. The P8082 method operates the front and rear injectors. These methods are saved in the C:\HPCHEM\ directory. A copy of the Chemstation method is in **Attachment** A. To run the instrument:

8.4.6.1 Open the Chemstation icon. From the Chemstation Menu select Sequence.

8.4.6.2 In Initial Setup type the name of the directory where data will be stored. The directory file is Q:\SVOA\Instr\Data\MMYY\Date. (e.g. If samples were set up to run on 9/8/05 on GC5 then the directory would be called Q:\SVOA\GC5_gg\Data\gg0905\gg090805)

ESS Laboratory. This document may be reproduced solely for internal use.

8.4.6.3 In Analytical Sequence, type in the vial numbers that correspond to when the front and rear injectors will start and stop analyzing.

8.4.6.4 In the Sample List type in the IDs of the samples and standards next to the corresponding vial numbers.

8.4.6.5 Select Save to save the newly created sequence. Save the sequence with the day created or the ID. (e.g.: A sequence saved on Monday is saved as Mon.s. Sequences do not have to be saved and can be easily recreated. Saving a sequence can save time if for any reason the analytical sequence needs to be restarted due to an instrument or computer malfunction.

8.4.6.6 Start the analysis by selecting RUN Analytical Sequence.

8.4.6.7 A Chemstation data file will be created for each sample and standard. These files will be stored in the directory C:\HPCHEM\1\data.

8.4.7 Reviewing the Initial Calibration Data: All GC Chemstation Data is reduced with the EnviroQuant software. (Refer to EnviroQuant Operator's Manual).

8.4.7.1 Setting up an EnviroQuant Method: All PCB methods are set up as documented in **Attachment** A. With each new calibration, the response and absolute retention times are updated. The absolute retention times are from the **Aroclor level 4 standards**.

8.4.7.2 Updating a New Initial Calibration:

8.4.7.2.1 Load the Aroclor method with parameters set according to 8.4.7.1.

8.4.7.2.2 Save the method using a unique identification such as 8082AD (the next initial calibration will be saved as 8082AE, then 8082AF, etc.). Note that the ID of this new method is written in the Method column of the RUN log next to the Initial Calibration Standard ID's)

8.4.7.2.3 Convert all Chemstation Files to EnviroQuant files.

8.4.7.2.4 Load **the Level -4** standard file for the 1660. Go into QEDIT and correctly integrate all of the peaks. Three to five peaks must be integrated for each Aroclor. Choose peaks that are at least 25% of the height of the largest Aroclor peak.Qdelete any false positives. Go into the initial calibration and update the absolute retention times

ESS Laboratory. This document may be reproduced solely for internal use.

and responses. Each of the Aroclors must resemble the patterns of chromatograms in **Attachment** C. If the pattern of an Aroclor does not match then refer to the following table:

8.4.7.2.5

Problem	Corrective Action
Wrong standard injected	Check sequence: setup section 8.4.6. Make sure standards are correctly placed on tray.
Contaminated standard	Inject another aliquot of standard. If that doesn't work, remake standard.
Standard prepared incorrectly	Remake standard
A dirty injection port	Perform maintenance. Refer to section 18.0

8.4.7.2.6 For Standards levels 1,2,3,5,6 only update responses.

8.4.7.2.7 The software calculates the average response factor from the 6-level curve. (See calculations 9.0) The %RSD of the response factor in each of the 6-levels is calculated and must be less than 20%. A minimum of 5 levels must be used for method 8081. (must be less than 10% in Method 608 with a minimum of 3 levels.) The lowest level used must be at or below the reporting limit. If any of the PCBs are outside of this criterion, check the data setup in the EnviroQuant software and review the integration of each of the 6-levels and make sure all responses were correctly updated. If manual integrations need to be made, update responses again.

8.4.7.2.8 When updating responses, all peaks in each level should fall within the retention time windows established according to section 8.5. If the peaks have drifted outside of the retention time windows then the initial calibration is not acceptable. This peak drift is usually due to a carrier gas leak or clog in a gas line. Most leaks come from the injection port. To correct a leak, start by tightening all connections, including the column nut, gold seal and insert retainer nut. If this doesn't work, go to section 18.0 and replace the ferrule, the septa, and the o-ring with a new one. In some cases, the gooseneck liner will get clogged with a piece of septa. Inspect the liner for pieces of septa. If the problem persists, consult with supervisor or a service representative. Once the problem has been corrected, reanalyze the entire initial calibration

ESS Laboratory. This document may be reproduced solely for internal use.

8.4.7.2.9 For those analytes of interest which are greater than 20% RSD (10% for Method 608), use a linear calibration. The linear calibration is a regression equation that does not pass through zero. See Calculations in section 9.0. The instrument response is treated as the dependent variable (y) and the concentration as the independent variable (x). The regression will produce the slope and intercept terms for a linear equation in the form:

$$y = ax + b$$

Where:

y= instrument response (peak area)
a= Slope
x= Concentration
b= intercept

8.4.7.2.10 The regression calculation generates a linear least squares regression ($r \geq 0.995$) or a non-linear regression ($r^2 \geq 0.99$) In the latter case, a six point minimum calibration shall be used for second order and a seven point minimum calibration shall be used for third order.

8.4.7.2.11 Once all integrations are correct, the %RSD is less than 20% (10% for Method 608), $r \geq 0.995$ or $r^2 \geq 0.99$ and all standards are within the RT windows, resave the method.

8.4.7.2.12 Evaluate quantitation at the low standard. This is the standard at the reporting limit. Typically PCB aroclors are reported to the 100ppb standard. Make a copy of the low standard file and requant the copy. Requanting the low standard should produce results within 70-130% of the true value. The calibration range, switching between an average and linear calibration, the standards, and the condition of the instrument will affect this result. If this criterium is not met, make the appropriate corrections (ie maintainence) and recalibrate.

8.4.7.2.13 Document all maintenance performed in the instrument maintenance log.

8.4.7.2.14 After the 1660 initial calibration curve has been established the analyst will analyze a 1000 ug/L second source standard to confirm the calibration. The second source must be within 20% (Method 608) of the known

ESS Laboratory. This document may be reproduced solely for internal use.
MASTER

value. ***The acceptance criterion for MADEP CAM is 20%.***

8.4.7.2.15 Each of the remaining 7 Aroclor stock standards are analyzed to establish a one point calibration with the corresponding second source for each used for confirmation. These Aroclor methods will be used to quantitate samples until the next 1660 initial calibration.

8.4.7.2.16 Use this new method to analyze samples and continuing calibration standards (calculate and generate report).

8.5 Retention Time Windows

8.5.1 Retention time windows are central to the identification of 3 to 5 peaks used to identify an Aroclor. Absolute retention times are used for compound identification in all GC and HPLC external standard methods. Retention time windows are established to compensate for minor shifts in absolute retention times as a result of sample loadings and normal chromatographic variability. The width of the retention time window should be carefully established to minimize the occurrence of both false positive and false negative results.

8.5.2 Determining Retention Time Windows:

8.5.2.1 Before establishing retention time windows, make sure that the chromatographic system is operating reliably and that the system conditions are optimized for the target analytes and surrogates in the sample matrix to be analyzed.

8.5.2.2 Make three injections of the mid-range CCV Aroclor over the course of a 72-hour period. Serial injections or injections over a period of less than 72 hours may result in retention time windows that are too tight.

8.5.2.3 Record the retention time in minutes for each peak used for quantitation and surrogate to three decimal places. Calculate the mean and standard deviation of the three absolute retention times for three to five peaks used for calibration or identification and each surrogate.

8.5.2.4 If the standard deviation of the retention times for any peak used for calibration is 0.000 (i.e., no difference between the absolute retention times), then use a default standard deviation of 0.01 minutes. The width of the retention time window for three to five peaks used for calibration or identification and surrogates is defined as ± 3 times the

MASTER

standard deviation of the mean absolute retention time established during the 72-hour period or 0.03 minutes, whichever is greater.

8.5.2.5 Establish the center of the retention time window for each Aroclor peak and surrogate by using the absolute retention time for each peak and surrogate from the mid-range CCV (Level 4 standard) at the beginning of each analytical shift. For samples run during the same shift as an initial calibration, use the retention time of the mid-point standard of the initial calibration.

8.5.2.6 Absolute retention time windows must be calculated for each Aroclor peak and surrogate on each chromatographic column and instrument used.

8.5.2.7 New retention time windows must be established when a new GC column is installed or when GC column has been shortened during maintenance.

8.5.2.8 Typically all PCB extracts are acid washed prior to analysis. In cases where an acid wash is not performed, a DDT/DDD/DDE standard must be analyzed to ensure that no aroclor peaks interfere with these analytes. If aroclor peak coelute with DDT,DDE or DDE adjust GC conditions to obtain better resolution.

8.6 Surrogates are added to each sample, blank, QC sample and calibration standard. Surrogate retention times in the calibration standards are useful in tracking retention time shifts. Whenever the observed retention time of a surrogate is outside of the established retention time window for standards, the analyst is advised to determine the cause and correct the problem before continuing analyses.

8.7 **Sample Analysis**: Once the initial calibration has passed all of the quality control criteria. Sample analysis may begin. All samples and standards must be run under the same conditions as the initial calibration.

8.7.1 **Sequence of Analysis:** Prior to sample analysis calibration verification (CCV) standards are analyzed. The CCV is the AR1660 Level 4 standardESS Laboratory analyzes four most common Aroclors, (**AR1242, AR1248, AR1254, and AR1660**) at the level 4 standard concentration. AR1660 is used to verify the initial calibration. The other Aroclors are analyzed for pattern recognition. Samples are immediately analyzed after the standards. Samples include the method blank, blank spike, blank spike duplicate, samples, matrix spikes, and matrix spike duplicates. Samples cannot be analyzed more than 12 hours after the first standard is injected and no more than 20 samples (10 field samples for Method 608) can be analyzed within that 12 hour period.

MASTER

ESS Laboratory. This document may be reproduced solely for internal use.

The calibration must also be verified at the end of each analytical sequence. The continuing calibration verification consists of the same four stock standards. The continuing calibration verification at the end of each analytical sequence consists of the Aroclor 1660 stock to verify detector response. If samples contain AR1221, AR1232, AR1262 or AR1268, samples must be re-analyzed and bracketed with the appropriate standards.

NOTE: Analysis of a second source calibration verification standard is performed immediately after initial calibration in place of the CCV.

NOTE: It is not acceptable practice to group QC samples together and/or to analyze QC samples on one instrument and their associated samples on another instrument. Analyst must try to analyze batch QC samples, as capacity allows, along with their associated field samples.

8.7.2 **Loading calibration standards and samples**: See section 8.4.3.

8.7.3 **Log Book entries**: See section 8.4.4.

8.7.4 **Running Continuing Calibration Standards and Samples with Chemstation Software:** See section 8.4.5

8.7.5 **Reviewing Continuing Calibration Standard and Sample data:** The AR1660 CCV is quantitated using the average response factor from the 6-point calibration. The calibration factor for each peak *should* not exceed a ±20 percent difference/drift when compared to the initial calibration curve (20% for CAM). For method 608 the average %D of 3-5 peaks from each Aroclor ***must*** not exceed ±15 %D. For the remaining Aroclors a single point (mid-level) standard is analyzed. All GC Chemstation data is reduced with the Enviroquant Software. NOTE: %Difference is used when average response factors are used in the initial calibration and %Drift is used for linear regression. (Refer to Hewlett Packard's EnviroQuant Operators Manual)

8.7.5.1 Update the AR1660 Method with the initial AR1660 Continuing Calibration standards:

8.7.5.1.1 Open the Enviroquant Icon on the computer connected to the instrument that ran the samples and standards.

8.7.5.1.2 Load the method with the initial calibration data that corresponds to the time and place where the samples and standards ran. See section 8.5.6. Usually this is the last method entered into the logbook.

MASTER

ESS Laboratory. This document may be reproduced solely for internal use.

8.7.5.1.3 Convert all Chemstation files to Enviroquant Files

8.7.5.1.4 Load the appropriate Aroclor standard that ran just prior to the first sample set up in the analytical sequence. Go into QEDIT and correctly integrate all of the peaks. Qdelete any false positives. Go into the initial calibration and update the absolute retention times only. **Do not update responses!** If the pattern of the Aroclor does not match the corresponding pattern in **Attachment** C then refer to the table in section 8.5.6.2.4.

8.7.5.1.5 Save the updated method according to section 8.5.6.2.2.

8.7.5.1.6 Perform the same procedure (8.7.5.1.1-8.7.5.1.5) for the other Aroclors as needed (only update retention times).

8.7.5.2 Reviewing the Continuing Calibration Standards:

8.7.5.2.1 Use the method updated in section 8.7.5.1.5 to analyze (calculate and generate report) the AR1660 calibration standards which ran before and after the samples of interest.

8.7.5.3 If the retention times have shifted, see section 8.4.6.2.7. All of the retention times must also be within the established Retention Time windows (see section 8.5.6.1.1). When these criteria are exceeded, inspect the gas chromatographic system to determine the cause and perform whatever maintenance is necessary before verifying calibration and proceeding with sample analysis. (See section 8.3) If routine maintenance does not return the instrument performance to meet the QC requirements based on the last initial calibration, then a new initial calibration must be performed.

8.7.6 Sample injection may continue for as long as the calibration verification standards and standards interspersed with the samples meet the QC requirements. The sequence ends when the standards which follow a set of samples have been injected or when qualitative and/or quantitative QC criteria are exceeded.

8.7.6.1 Each sample analysis must be bracketed with an acceptable initial calibration and ICV or calibration verification standard(s) (each 12 hour shift), followed by another set of calibration standards. All samples that were injected after the standard that last met the QC criteria must be re-injected.

8.8 Sample Data Reduction:

ESS Laboratory. This document may be reproduced solely for internal use.

8.8.1 All samples bracketed within acceptable AR1660 calibration standards are analyzed by the same method used to analyze the standards. If Aroclors other than 1016 or 1260 are present, single point calibration standards analyzed just prior to the samples. The initial calibration generated with the current 1660 initial calibration is used for quantitation. Through EnviroQuant, a quantitation report and chromatogram is generated for each sample.

8.8.2 The EnviroQuant software will tentatively identify Aroclor 1016 or 1260 only when a peak from a sample extract falls within the daily retention time windows.

8.8.3 The analyst must carefully review the chromatograms to ensure that all peaks were identified correctly. If there is interference in the sample and the chromatograms are not very clean, the analyst must go into Qedit section of the software to review the integrations.

8.8.3.1 Each blank, blank spike, blank spike duplicate, sample, matrix spike, and matrix spike duplicate should have surrogates identified. If the surrogate has not been identified, go into Qedit and integrate the peak in the surrogate retention time window. In some cases, surrogates can not be identified due to interferences from unknown components that elute at the same time as the surrogate. This must be noted in the case narrative. If the surrogates are outside the retention time window, then the retention times have shifted. This is either due to a gas leak, a clog in the gas line, or the sample matrix. When this happens, the sample must be re-analyzed. Oily samples can cause retention time shifts. The analyst may need to dilute sample to aid in identification (reduce matrix affect) but to meet reporting limit of 1 ppm, the sample result must be quantitated on the undiluted sample.

8.8.3.2 The analyst must also review the baseline on all sample and standard chromatograms. A baseline rise will result from contamination of the injection port and column. When the baseline interferes with sample and standard analysis, samples and standards must be re-analyzed. Attempt to isolate the sample or samples that contaminated the system. These samples should be cleaned with florisil or re-analyzed with a dilution.

8.8.3.3 Late eluting compounds can carryover from sample to sample or sample to standard. Large unresolved peaks in a sample are a good indication of carryover. If carryover occurs, first identify the sample, which is potentially carrying over. Rerun samples with carryover contamination. Run instrument blanks, consisting of clean hexane,

ESS Laboratory. This document may be reproduced solely for internal use.

after the sample that carried over until carryover is eliminated. In cases when carryover is too great, the sample may need to be cleaned up further or diluted.

8.8.4 The on-column concentration of each Aroclor peak for Aroclor 1016 and 1260 in the sample is provided on the quantitation report along with the surrogate concentrations. The concentration is in ng/ml. If there are no peaks that resemble an Aroclor according to the sample chromatogram then Aroclors are not present in the sample

8.8.5 If there is a group of peaks that resemble an Aroclor in **Attachment** C then that Aroclor standard must be analyzed before and after the sample. To quantitate an Aroclor, first make sure all of the major peaks for the specific Aroclor are present. All major peaks are specified in **Attachment** C. Next compare the pattern of the peaks in the sample to the corresponding standard which was analyzed just prior. The ratio of area counts of two major peaks in the sample should be equal to the ratios of the same peaks in the standard. In some cases the ratios will not match due to interferences from other components in the sample. Identifying interferences is the analyst's judgement. If the sample is mixed in with a difficult matrix with much interference then more than one analyst should attempt to identify the PCB. Once the analyst is convinced that the PCB is present, the Aroclor can be quantitated; otherwise, report as ND and narrate. When the match is unclear and reported as ND, the potential presence of PCB must be narrated. In this case chromatograms should be provided. Use three-five peaks for quantitation. The peaks with the least amount of interference should be used for quantitation. The ratio between the three-five peaks should also come close to matching the standard. The software is set up to quantitate each peak individually. The ratio is comparable when the quantitation of each peak generates the same value. If the average Aroclor concentration is below the calibration range then it cannot be reported as detected.

8.8.6 If the average Aroclor concentration is above the MDL and below the level 6 concentration, then the result is tentative and must be confirmed.

8.8.7 If the average Aroclor concentration is above the level 6 concentration, then the sample needs to be diluted to bring the concentration of the analyte to within the level 1 and level 6 ranges.

8.8.8 A PCB Aroclor is confirmed by performing the same analysis on a different column. If the sample was initially analyzed on an RTX-CL Pesticide column I and there was an analyte detected above the method detection limit, the sample must be confirmed on an RTX-CL Pesticide Column II. The reverse also holds true.

ESS Laboratory. This document may be reproduced solely for internal use.

8.8.9 The final result is determined by comparing the initial analysis with the confirmation analysis.

8.8.9.1 If, on the confirmation analysis, the sample is at a concentration less than the method detection limit (MDL), then the result is reported as not detected (ND) above the method reporting limit (MRL). The MRL is based on the level 1 calibration standard concentration. **Discussion to be included in project narrative.**

8.8.9.2 If the confirmation result is within calibration range, the result has been confirmed. The initial result is compared to the confirmation result and if the RPD< 40%, then the higher result is reported. If the RPD > 40%, the analyst must evaluate the chromatogram for co-eluting peaks. If no co-elution is detected and all other QC is within criteria, report the higher result. If co-elution was present, the analyst is to report the result without co-elution and an explanation is to be added to the case narrative.

8.8.9.3 If the confirmation results are at a concentration greater than the level 6 standard, then a dilution must be made. Dilutions should be 60-80% of the highest standard. The sample dilution is analyzed. The criterion stated in 8.7.9.2 is applied to the two results.

NOTE: ESS Laboratory normally uses level 2 to determine the MRL of soil samples but reserves the option of utilizing the level 1 standard.

9.0 CALCULATIONS

9.1 Calculate PCB soils as follows:

$$\text{PCB Result ug/Kg} = \frac{\text{(Avg Concentration of 3-5 Peaks ppb)(Extract Volume ml)(Dilution)}}{\text{(\% Solid/100)(Weight of Sample Measured g)}}$$

9.2 Calculate PCB aqueous as follows:

$$\text{PCB Result ug/L} = \frac{\text{(Avg Concentration of 3-5 Peaks ppb)(Extract Volume ml)(Dilution)}}{\text{Volume of Sample in ml}}$$

9.3 Calculate PCB matrix spike recoveries as follows:

9.3.1 Matrix spike added is calculated as follows:

$$\text{Matrix Spike Added} = \frac{\text{(Conc. of Spike)(Volume of Spike Added)}}{\text{Initial Volume}}$$

MASTER

NOTE: Initial volume can be in liters or grams. If it is a soil make sure to multiply initial volume by % solids/100.

9.3.2 Matrix spike % recovery is calculated as follows:

$$\% \text{ Recovery} = \frac{\text{Matrix Spike Result X 100}}{\text{Matrix Spike Added}}$$

9.4 For surrogate recoveries, % RSD and all other calculations done by the computer's software refer to Hewlett Packard © 1992 printed in USA 11/92 Part No. HP G1032-90020.

9.5 Calibration Factor (CF)

$$CF = \text{Peak Area} / \text{Mass of Compound Injected}$$

9.6 Percent Relative Standard Deviation:

$$\% \text{ RSD} = (\text{SD} / \text{Average CF}) \times 100\%$$

Where: SD = standard deviation (o-1)

9.7 Percent Difference: $\% D = ((CFv - CF \text{ ave}) / CF \text{ ave}) \times 100\%$

Where:
CFv = Calibration Factor of the verification standard.
CF ave = The mean calibration factor from the initial calibration.

9.8 Percent Drift:

$$\% \text{ Drift} = \frac{\text{Calculated Concentration} - \text{Theoretical Concentration}}{\text{Theoretical Concentration}} \times 100\%$$

10.0 QUALITY ASSURANCE/QUALITY CONTROL

10.1 Immediately after the initial calibration, a second source standard (ICV) is analyzed. This standard is prepared at the level 4 concentration. The percent recovery between the Level 4 in the initial calibration and the second source must be 80-120%. If the percent recovery is outside criterion, then prepare and re-analyze the ICV. If the second consecutive ICV is still outside criterion, then a new initial calibration must be performed with freshly prepared calibration standards. Maintain instrument when necessary. Sample analysis cannot begin until a valid second source has been analyzed.

MASTER

ESS Laboratory. This document may be reproduced solely for internal use.

10.2 **Accuracy and Precision**: All laboratory personnel must demonstrate initial proficiency for each sample preparation method/matrix that he/she performs. All new employees must successfully demonstrate initial proficiency prior to independently performing analysis on real samples. This must be accomplished by generating data of acceptable accuracy and precision for target analytes in a clean matrix. The initial proficiency results will become part of each employee's training file

10.2.1 QC Sample Preparation: Four QC samples must be prepared from a spiking solution with the analytes of interest. The spiking solution must be made using standards **prepared independently from those used for calibration**. The samples must be prepared at a concentration that would result in data falling at the mid-level standard of the calibration curve. In most cases the blank spike solution is used. Prep: The samples are prepared in a clean matrix (DI water for aqueous samples and Ottawa sand or Sodium sulfate for soil/solids).

10.2.2 Sample Analysis: The four QC samples must be analyzed within the criteria of the method being evaluated. The QC samples must be handled in exactly the same manner as actual samples.

10.2.3 Accuracy Calculation: Accuracy is defined as the closeness of agreement between an observed value and an accepted reference value. Each of the four spiked samples will be calculated for percent recovery. The average of the percent recovery values is the accuracy result.

10.2.4 Precision Calculation: Precision is defined as the agreement of a set of replicate measurements without assumption of knowledge of the true value. Precision is estimated by the relative standard deviation (RSD) of the four QC samples.

$$\%RSD = (s / \bar{x})\ 100\ \%$$

Where:

s = Standard Deviation of a finite number of values. On a scientific calculator use the **σxn-1** key.

$\bar{x}$ = the average of the four QC sample % recoveries.

10.2.5 Reporting Accuracy and Precision: Accuracy and Precision data should be presented with the following minimum info:

Matrix:	Prep Method:
Clean-up Method:	Analysis Method:
Date Extracted:	Date Analyzed:

ESS Laboratory. This document may be reproduced solely for internal use.

Prepared by: If Applicable
Accuracy:

Analyzed by:
Precision:

Parameter	*% Rec. QC 1*	*% Rec. QC 2*	*% Rec. QC 3*	*% Rec. QC 4*	*Average Recovery*	*Standard Deviation*	*%RSD*

10.2.6 Interpretation of Results: The percent recoveries should be between 60-130% and the %RSD should be less than 30%. If any of the accuracy and precision results do not fall within the criteria then re-prep and reanalyze all QC samples only for those analytes that did not pass.

10.3 A Method Blank is extracted with each 20 samples or analytical batch. A method blank is analyzed with each analytical sequence to ensure the instrument is clean. The concentration of analytes in the method blank must be less than MRL (MRL is the Level 1 standard). If the concentration of any analyte exceeds MRL, then proceed to Section 11.0 for corrective action.

10.4 Run a 6-point initial calibration curve, using the primary source standards each time major instrument maintenance occurs, or if the CCV does not meet acceptance criteria. Acceptance criteria are presented in Section 8.5

10.5 A blank spike/blank spike duplicate is analyzed with each batch of 20 or less samples. The acceptance limit for the BS/BSD is 40-140% and 20%RPD for Aqueous and 30%RPD for soil/solid. ***Refer to Attachment F for MADEP CAM criteria.*** If the BS/BSD is not within limits, see section 11.0 for corrective action.

10.6 Calculate surrogate standard recovery on all samples, blanks, and spikes. Determine if the recovery is within 30-150% ***Refer to Attachment F for MADEP CAM criteria***. If recovery is not within limits, the following are required:

10.6.1 Confirm that there are no errors in calculations, surrogate solutions and internal standards. Also, check instrument performance.

10.6.2 Examine chromatograms for interfering peaks and for integrated areas.

10.6.3 Recalculate the data and/or re-analyze the extract if any of the above checks reveal a problem.

10.6.4 If the same surrogate is outside limits on both columns, re-extract the sample. If both surrogates are outside limit on only one column, re-analyze the sample. A case narrative should be filled out in order to inform client.

10.7 Continuing calibration verification (CCV) must be performed at the beginning, after every 20 samples (10 field samples Method 608) and at the end of each analytical sequence. The response factors for the calibration should be within ±20 %

ESS Laboratory. This document may be reproduced solely for internal use.

MASTER

difference/drift of the initial calibration (***refer to Attachment F for MADEP CAM criteria***). (+/- 15% for method 608) When a CCV is out of this acceptance window, re-prep and/or re-analyze the CCV. If corrective action does not produce a second consecutive (immediate) CCV within acceptance limits, then the analyst may demonstrate the initial calibration is valid by analyzing two consecutive CCVs at two concentrations. If CCV criteria are not acceptable, then a new initial calibration must be performed. All samples analyzed after the last acceptable CCV must be re-analyzed with the following exceptions:

10.7.1 For CCVs that are exceeded high, samples with results that are non-detect may be reported. It has been shown that results would have been detected.

10.7.2 For CCVs that are exceeded low, samples with results above a regulatory limit may be reported

10.8 A matrix spike and matrix spike duplicate are analyzed with every batch of 20 samples. An MS/MSD is required on 10% of samples extracted for 608. (The acceptance limits 40-140% Recovery and ± 50% RPD for Aroclors. (MAMCP RPD <20% waters, <30% Soils) If the blank spike (BS) results are acceptable and the matrix spike/matrix spike duplicate results are outside of QC limits, note in case narrative.

10.9 Control charts are generated quarterly for blank spikes (BS) on both Soil and Water.

10.10 MDLs are determined in reagent water and Ottawa sand/sodium sulfate and verified annually. See SOP 110_0013 for complete MDL study instructions. (Project-specific requirements may require that an MDL study be performed in the site-specific matrix.).

11.0 DATA VALIDATION

11.1 Data validation will be accomplished by reviewing all of the quality control parameters and assuring that they are within recommended ranges by completing the Data Review Checklist for GC/ECD PCB. The only exceptions made to ranges would be the following:

11.1.1 For MS/MSD, the RPD should be + 50% (MA MCP RPD <20% waters, <30% Soils) (Table 1 and Attachment E). However, there are cases where duplicates may not work. If this is the case, inform client in narrative concerning sample non-homogeneity.

11.1.2 For matrix spikes, the % Recovery should be 40-140% (***Table 1 and Attachment E)***. If the matrix spike is outside criterion, check the BS/BSD. If the BS/BSDs are within limits, matrix interferences are present and should be noted in the narrative.

MASTER

11.1.3 Analytical batches with Method blanks greater than or equal to the MRL will be re-prepped and re-analyzed with the following exceptions:

11.1.3.1 Samples that are that are at least twenty times higher than the method blank may be reported.

11.1.3.2 If the analyte is found in the method blank at or above the MRL, but is not in any of the associated samples, no corrective action is needed.

11.1.3.3 Any results that are reported with method blank contamination must be B-flagged and narrated.

11.1.4 For the BS/BSD, the % Recovery should be 40-140% ***(refer to Attachment F for MADEP CAM criteria)***. If the BS/BSD is outside this criterion, the analytical batch will be re-extracted and re-analyzed with the following exceptions:

11.1.4.1 For BS/BSDs greater than the upper control limit, samples with results below the MRL may be reported. It has been shown that the results above MRL would have been detected.

11.1.4.2 In some instances there may be insufficient sample to re-extract. The client is to be contacted for instructions on how to proceed

11.1.4.3 Any samples that are reported with invalid BS/BSD data must have a notation in the case narrative.

11.2 All unusual observations and method deviations will be noted in the narrative accompanying the data report presented to the client.

11.3 A second analyst reviews all data for accuracy. Results of this review are noted on the SVOA Sequence Log in the second level review field and in the comment section.

12.0 REFERENCES

12.1 Method 8082, Test Methods for the Analysis of Solid Waste, Third Edition, Update III.

12.2 HP GC EnviroQuant User's Guide, HPG1045A.

12.3 HP Environmental Data Analysis User's Guide HPG0032C.

12.4 HP 5890 Series II /HP 6890 GC Operations Manuals

MASTER

12.5 TNI Standard: Volume 1, Module 2 and Volume 1, Module 4.

12.6 Massachusetts DEP WSC-CAM IIA

13.0 POLLUTION PREVENTION and WASTE MANAGEMENT

13.1 ESS Laboratory's policies on pollution prevention and waste management are covered in SOP 90_0002, Hazardous Waste Contingency and Emergency Response Plan. All employees are trained in the requirements of the SOP.

14.0 METHOD PERFORMANCE

14.1 Precision and Accuracy data must be generated by all employees before performing this analysis on client samples. The data is generated by analyzing a method blank and four blank spike samples. Acceptance criteria are 60-130% Recovery and %RSD of $\leq$ 30%.

14.2 The precision and accuracy data in Table 1 were developed using the Soxtherm extraction method. Values are in ug/L.

15.0 TABLES, DIAGRAMS, FLOWCHARTS, AND VALIDATION DATA

15.1 Typical Precision and Accuracy data generated 6/1/2005 using the Soxtherm extraction method (3541).

Compound	Spk	Avg	%RSD	%Rec
Aroclor 1016	5	4.68	5.9	93.5
Aroclor 1260	5	4.45	8.4	89.0

16.0 DEFINITIONS

16.1 **Accuracy**: The closeness of agreement between an observed value and an accepted reference value. When applied to a set of observed values, accuracy will be a combination of a random component and of a common systematic error (or bias) component.

16.2 **Batch**: A group of samples which behave similarly with respect to the sampling or the testing procedures being employed and which are processed as a unit. For QC purposes, if the number of samples in a group is greater than 20, then each group of 20 samples or less will all be handled as a separate batch.

16.3 **Bias**: The deviation due to matrix effects of the measured value (x_s - x_u) from a known spiked amount, where x_s is the spiked sample and x_u is the un-spiked sample. Bias can be assessed by comparing a measured value to an accepted reference value

ESS Laboratory. This document may be reproduced solely for internal use.
MASTER

in a sample of known concentration or by determining the recovery of a known amount of contaminant spiked into a sample (matrix spike).

16.4 **Control Sample**: A QC sample introduced into a process to monitor the performance of the system.

16.5 **Equipment Blank**: A sample of analyte-free media which has been used to rinse the sampling equipment. It is collected after completion of decontamination and prior to sampling. This blank is useful in documenting adequate decontamination of sampling equipment.

16.6 **Method Reporting Limit**: The lowest concentration that can be reliably achieved within specified limits of precision and accuracy during routine laboratory operating conditions. The MRL is generally 5 to 10 times the MDL. ESS Laboratory sets the MRL to the lowest non-zero standard in the calibration curve or higher.

16.7 **Field Duplicates**: Independent samples which are collected as close as possible to the same point in space and time. They are two separate samples taken from the same source, stored in separate containers, and analyzed independently. These duplicates are useful in documenting the precision of the sampling process.

16.8 **Blank Spike (BS)**: A known matrix spiked with compound(s) representative of the target analytes. This is used to document laboratory performance.

16.9 **Matrix**: The component or substrate (e.g., surface water, drinking water) which contains the analyte of interest.

16.10 **Matrix Duplicate**: An intralaboratory split sample which is used to document the precision of a method in a given sample matrix.

16.11 **Matrix Spike**: An aliquot of sample spiked with a known concentration of target analyte(s). The spiking occurs prior to sample preparation and analysis. A matrix spike is used to document the bias of a method in a given sample matrix.

16.12 **Matrix Spike Duplicates**: Intralaboratory split samples spiked with identical concentrations of target analyte(s). The spiking occurs prior to sample preparation and analysis. They are used to document the precision and bias of a method in a given sample matrix.

16.13 **Method Blank**: An analyte-free matrix to which all reagents are added in the same volumes or proportions as used in sample processing. The method blank is carried through the complete sample preparation and analytical procedure. The method blank is used to document contamination resulting from the analytical process.

16.14 **Method Detection Limit (MDL)**: The minimum concentration of a substance that can be measured and reported with 99% confidence that the analyte concentration is

MASTER

greater than zero and is determined from analysis of a sample in a given matrix type containing the analyte. See SOP 110_0013 for further explanation.

16.15 **Organic-Free Reagent Water**: For volatiles, all references to water in the method refer to water in which an interferant is not observed at the method detection limit of the compounds of interest. A water purification system is used to generate organic-free deionized water.

16.16 **Surrogate**: An organic compound which is similar to the target analyte(s) in chemical composition and behavior in the analytical process, but which is not normally found in environmental samples.

17.0 PERSONNEL QUALIFICATIONS

17.1 Analysts who perform this analysis must have a working knowledge or quantitative and qualitative analysis, instrumental methods of analysis, chemical laboratory methods, and equipment.

17.2 All analysts, before performing any analysis, participate in the ESS Laboratory training program (SOP80_0016). The training process consists of reading the Standard Operating Procedure, gaining instruction on the procedure from an experienced analyst, and performing the initial demonstration of capability.

18.0 TROUBLESHOOTING

18.1 **Instrument Maintenance**: The following procedure is performed when the instrument is initially set up, on a weekly basis to ensure optimum performance, or when a continuing calibration has failed the QC criteria.

18.1.1 Set the GC system to room temperature.

18.1.2 Turn off oven.

18.1.3 Remove column by unscrewing the column in the injection port.

18.1.4 Remove septum nut and septa. Discard septa.

18.1.5 Remove insert retainer nut. This will expose the O-ring and glass liner. Using a set of tweezers, remove O-ring and liner. If O-ring is not distorted then set aside for later use. Otherwise, replace O-ring. Remove the glass liner. Rinse liner with methanol and scrub with a cotton swab. If the liner is visibly stained, then replace with a new one.

18.1.6 With cotton swab dipped in methanol, clean the injection port and insert retainer nut.

MASTER

ESS Laboratory. This document may be reproduced solely for internal use.

18.1.7 Remove the gold seal nut located on the bottom of the injection port. With a cotton swab and methanol, clean the gold seal.

18.1.8 Replace all parts in the following order:

18.1.8.1 Gold seal nut. Hand tighten and 1/4 turn with wrench.

18.1.8.2 Insert clean or new glass liner.

18.1.8.3 Place O-ring over liner. Slide O-ring over and down the liner until it fits snug against the injection port.

18.1.8.4 Replace insert retainer nut.

18.1.8.5 Place new green septa into insert retainer nut.

18.1.8.6 Replace septum nut. **Only hand tighten!**

18.1.8.7 Slide column nut and a new graphite ferrule over column.

18.1.8.8 Using a ceramic tile, cut 3-6 inches of the column. The cut must be square with no jagged edges.

18.1.8.9 Connect column to injection port by inserting 3 mm. of column into the injection port and hand-tighten column nut then adding 1/4 turn with a wrench.

18.1.9 Make sure all gases are flowing. (Measure flows with bubble meter.) The flow should be between 5 and 6 ml/min.

18.1.10 Turn on injection port temperature.

18.1.11 Set oven temperature to 120 ^{0}C and allow the system to stabilize. Bake out the oven at 320°C for an hour. Reset back to 120°C.

18.2 Record all maintenance in the instrument's maintenance logbook.

19.0 DATA MANAGEMENT AND RECORDS

19.1 **Data Management** - ESS Laboratory's utilizes the Promium Element LIMS system as part of its Data Management system. Client sample information is entered into ELEMENT LIMS and analyses are assigned to each sample. The LIMS allows EPA hold times, minimum batch QC requirements, and QC criteria to be assigned to each analysis. Standards can be entered and assigned to QC samples through the LIMS. Once analysis has been performed, data is imported using DataTool avoiding

ESS Laboratory. This document may be reproduced solely for internal use.
MASTER

manual errors. In conjunction with Crystal Reports, the ELEMENT system allows for a wide variety of reporting formats.

19.2 **Records** – The specific retention periods required in the NELAC Standards, EPA-CFR and state and local statutes are followed or exceeded. At a minimum, data records are retained for five years from last use (10 years for drinking water). If there is a question about whether a record should be retained or disposed because no specific requirement could be found, the record is retained until such time as a retention period is specified. Records are stored in specified-labeled locations and are easily retrievable. All raw data associated with testing is also retained including; computer printouts, chromatograms, review forms, and logbooks.

20.0 ATTACHMENTS

20.1 DELETED

20.2 Figure 1 – DELETED.

20.3 Attachment A – Chemstation/Enviroquant Method

20.4 Attachment B – DELETED.

20.4 Attachment C – Chromatograms of Arochlor PCBs

20.5 Attachment E - Summary of Method Quality Objectives

20.6 Attachment F – Specific QC Requirements for Method 608

20.7 Attachment G – Specific QC Requirements for WSC-CAM-V B

MASTER

ESS Laboratory. This document may be reproduced solely for internal use.

PAGE DELETED

ESS Laboratory. This document may be reproduced solely for internal use.

Attachment A – Chemstation/Enviroquant Method

ESS Laboratory. This document may be reproduced solely for internal use.

Run Time Checklist

Pre-Run Program:	none
Name:	
Parameter:	
Data Acquisition:	On
Use Barcode Labels:	Off
Data Analysis:	On
Sig. 2 Mth:	none
Post-Run Program:	none
Name:	
Parameter:	

Injector Information

Injection Source:	Auto
Injection Location:	Front
Front:	
Sample Washes:	2
Sample Pumps:	3
Sample Volume:	2 stops
Viscosity Delay:	3 sec.
Solvent A Washes:	2
Solvent B Washes:	2
On-Column:	No

Purge A/B:

	Init Value	On Time (Min.)	Off Time (Min.)
A (Valve 3)	Off	0.50	0.00
B (Valve 4)	On	0.50	0.00

A - Splitless Injection:	No
B - Splitless Injection:	No

Temperature Information

Zone Temperatures:

	Set point
Inl. A	250 C.
Inl. B	250 C.
Det. A	320 C.
Det. B	320 C.
Aux.	Off

Oven Parameters:

Oven Equib. Time:	0.20 Min.
Oven Max:	340 C.
Oven	On
Cryo	Off
Ambient:	25 C.
Cryo Blast	Off

MASTER

)ven Program:

	Set Point
Initial Temp:	130 C.
Initial Time:	1.00 Min.

Level	Rate (C./Min.)	Final Temp. (C.)	Final Time. (Min.)
1	18.0	310	3.00
2(A)	0.00		
3(B)			

Next Run Time: 14.00 Min.

Signal Information

Save Data: Both

Signal 1

Source:	Det. A
Peak Width:	0.053 Min.
Data Rate:	5.000 Hz.
Start Data:	3.00 Min.
Stop Data:	29.25 Min.

Signal 2

Source:	Det. B
Peak Width:	0.053 Min.
Data Rate:	5.000 Hz.
Start Data:	3.00 Min.
Stop Data:	29.25 Min.

Valves/Relays Information

Initial Setpoints:

5890 Valves:

Valve 1:	Off
Valve 2:	Off
Valve 3 (Purge A):	Off
Valve 4 (Purge B):	On

Detector Information

Detector	Type	State
A	ECD	On
B	ECD	On

Timed Events:

Events:	Value:	Time:
Signal Switch	OFF	0.00
Signal Switch	ON	0.00

Sequence Recalibration Table

Cal. Line	Cal. Level	Update Response Factor	Update Retention Times	Recalib Interval

Signal Plot Information

Signal	Attn. (2^)	Offset (%)	Time (Min.)
1	4	10	5
2	4	10	5

Integration Events

Events:	Value:	Time:
Initial Area Reject	1	INITIAL
Initial Peak Width	0.040	INITIAL
Shoulder Detection	OFF	INITIAL
Initial Threshold	0	INITIAL

Report Specification

Destination: Report to Screen
Based on: Area
Calculations: Percent
Printer Output: None
Report Header: None

Graphics Options

Title: Vertical
Include:
Axes Units: On
Peak Names: Off
Retention Times: On
Baselines: On
Tick Marks: On
Peak Labels Font: Default 12

Calibration Table Empty

No Calibration Settings

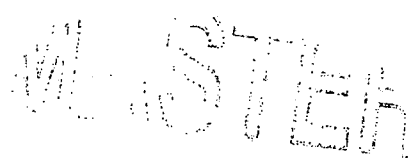

Run Time Checklist

Pre-Run Program:	none
Name:	
Parameter:	
Data Acquisition:	On
Use Barcode Labels:	Off
Data Analysis:	On
Sig. 2 Mth:	none
Post-Run Program:	none
Name:	
Parameter:	

Injector Information

Injection Source:	Auto
Injection Location:	Front
Front:	
Sample Washes:	2
Sample Pumps:	3
Sample Volume:	2 stops
Viscosity Delay:	3 sec.
Solvent A Washes:	2
Solvent B Washes:	2
On-Column:	No

Pulse A/B:

	Init Value	On Time (Min.)	Off Time (Min.)
A (Valve 3)	Off	0.50	0.00
B (Valve 4)	On	0.50	0.00

A - Splitless Injection:	No
B - Splitless Injection:	No

Temperature Information

Zone Temperatures:

	Set point
Inl. A	250 C.
Inl. B	200 C.
Det. A	320 C.
Det. B	320 C.
Aux.	Off

Oven Parameters:

Oven Equib. Time:	0.20 Min.
Oven Max:	360 C.
Oven	On
Cryo	Off
Ambient:	25 C.
Cryo Blast	Off

MASTER

Method: C:\HPCHEM\1\METHODS\8082BP.MTH

Oven Program:

	Set Point
Initial Temp:	130 C.
Initial Time:	1.00 Min.

Level	Rate (C./Min.)	Final Temp. (C.)	Final Time. (Min.)
1	18.0	310	4.00
2(A)	0.00		
3(B)			

Next Run Time: 15.00 Min.

Signal Information

Save Data: Both

Signal 1

Source:	Det. A
Peak Width:	0.053 Min.
Data Rate:	5.000 Hz.
Start Data:	3.00 Min.
Stop Data:	29.25 Min.

Signal 2

Source:	Det. B
Peak Width:	0.053 Min.
Data Rate:	5.000 Hz.
Start Data:	3.00 Min.
Stop Data:	29.25 Min.

Valves/Relays Information

Initial Setpoints:

5890 Valves:

Valve 1:	Off
Valve 2:	Off
Valve 3 (Purge A):	Off
Valve 4 (Purge B):	On

Detector Information

Detector	Type	State
A	ECD	On
B	ECD	On

Timed Events:

Events:	Value:	Time:
Signal Switch	OFF	0.00
Signal Switch	ON	0.00

MASTER

Sequence Recalibration Table

Cal. Line	Cal. Level	Update Response Factor	Update Retention Times	Recalib Interval

Signal Plot Information

Signal	Attn. (2^)	Offset (%)	Time (Min.)
1	4	10	7
2	4	10	7

Integration Events

Events:	Value:	Time:
Initial Area Reject	1	INITIAL
Initial Peak Width	0.040	INITIAL
Shoulder Detection	OFF	INITIAL
Initial Threshold	0	INITIAL

Report Specification

Destination: Report to Screen
Based on: Area
Calculations: Percent
Printer Output: None
Report Header: None

Graphics Options

Title: Vertical
Include:
Axes Units: On
Peak Names: Off
Retention Times: On
Baselines: On
Tick Marks: On
Peak Labels Font: Default 12

Calibration Table Empty

No Calibration Settings

Attachment C – Chromatograms of Arochlors

ESS Laboratory. This document may be reproduced solely for internal use.

Quantitation Report

Data File : C:\HPCHEM\1\DATA\GE08209A\029F0101.D
Acq On : 21 Aug 98 08:12 AM
Sample : A32-3
Misc :
Quant Time: Aug 21 10:11 1998

Vial: 29
Operator: [GC]MS
Inst : GC 3
Multiplr: 1.00

Method : C:\HPCHEM\1\METHODS\A32F0820.M
Title :
Last Update : Fri Aug 21 10:13:49 1998
Response via : Multiple Level Calibration

Volume Inj. : 1 uL
Signal Phase : RTX-CLPESTICIDE
Signal Info : 0.53

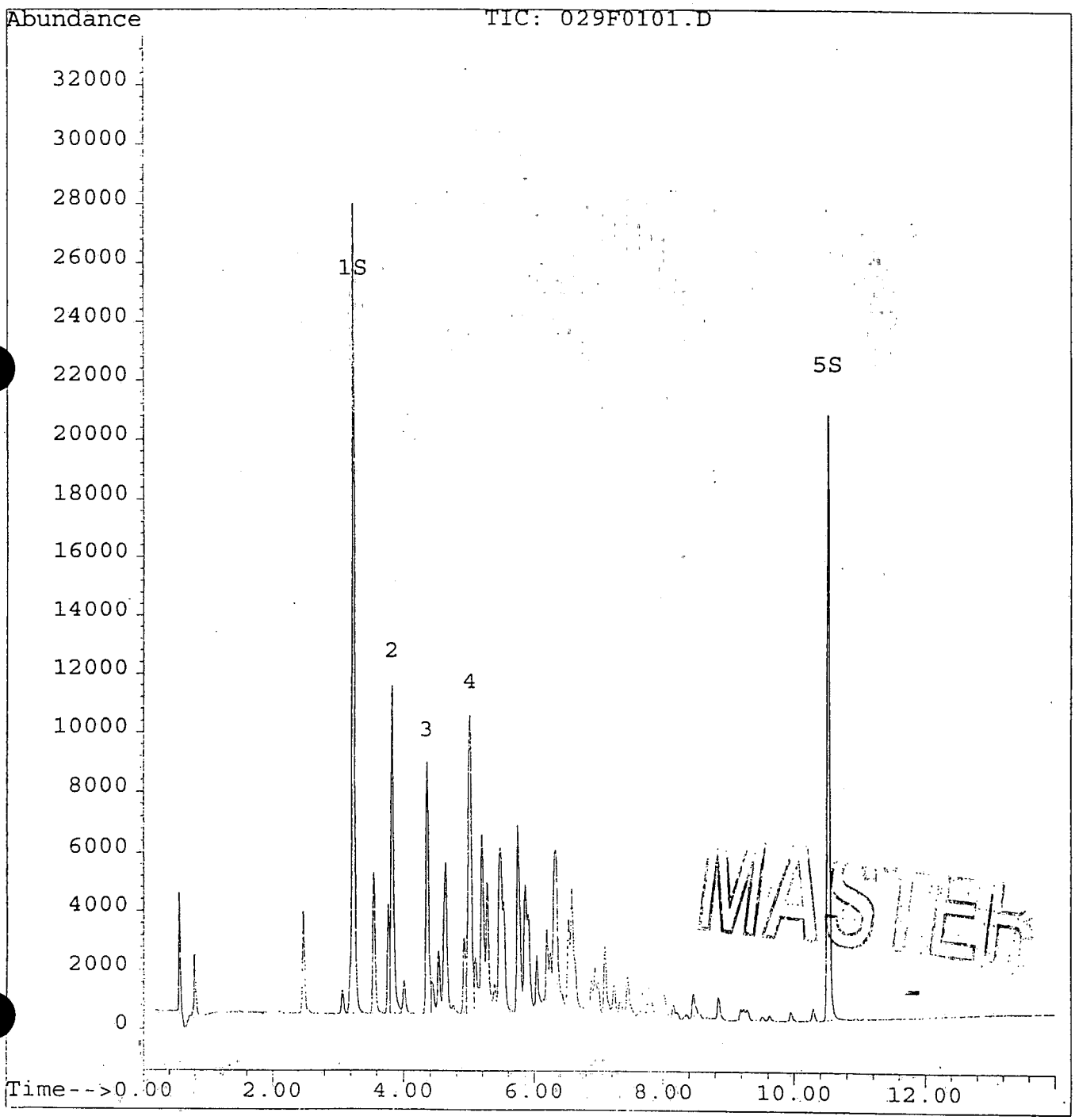

MASTER

Quantitation Report

Data File : C:\HPCHEM\1\DATA\GE08209A\014F0101.D
Acq On : 20 Aug 98 07:04 PM
Sample : A42-3
Misc :
Quant Time: Aug 21 9:42 1998

Vial: 14
Operator: [GC]MS
Inst : GC 3
Multiplr: 1.00

Method : C:\HPCHEM\1\METHODS\A42F0820.M
Title :
Last Update : Fri Aug 21 09:48:46 1998
Response via : Multiple Level Calibration

Volume Inj. : 1 uL
Signal Phase : RTX-CLPESTICIDE
Signal Info : 0.53

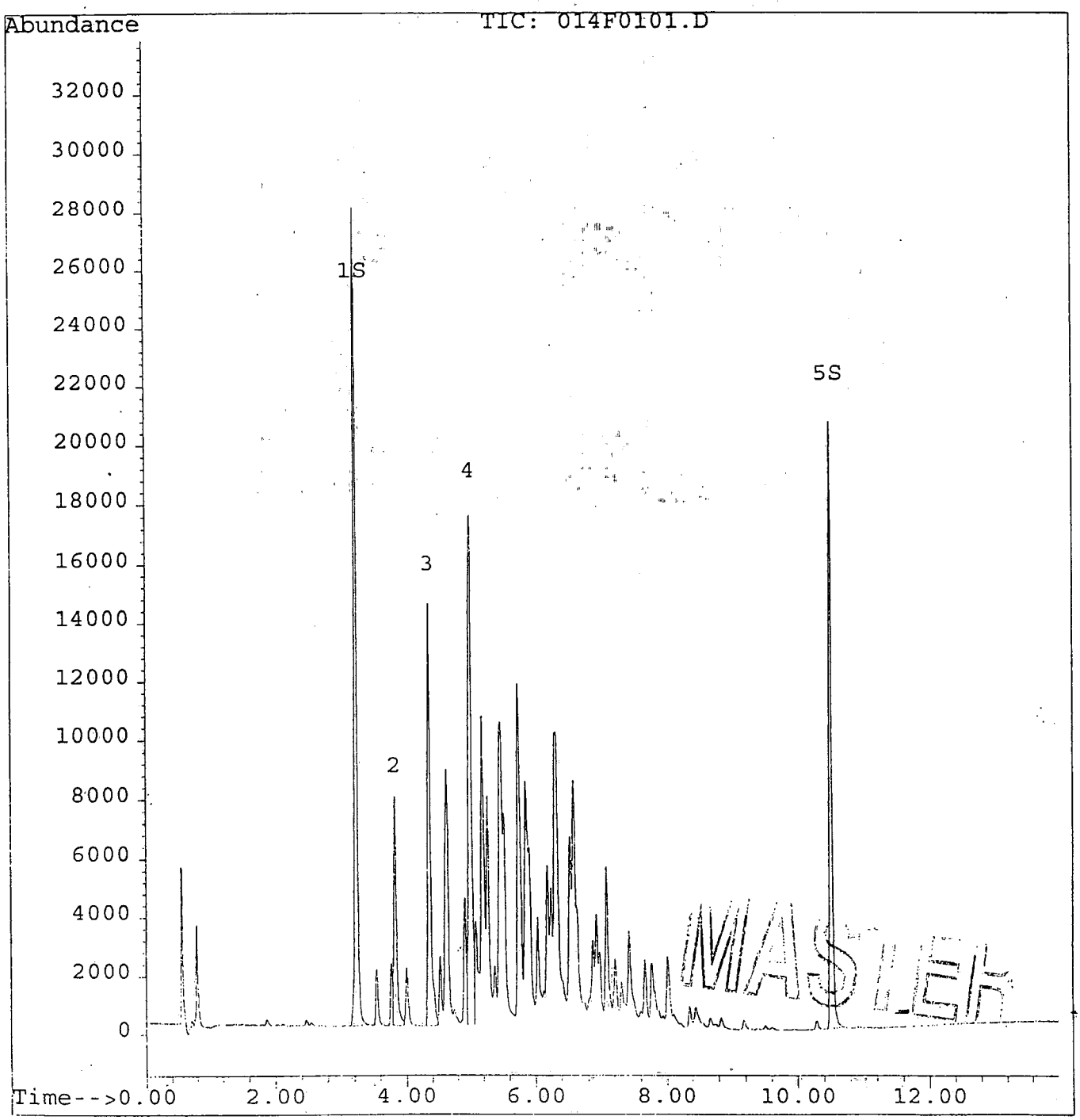

MASTER

Data File : C:\HPCHEM\1\DATA\GE08209A\004F0101.D
Acq On : 20 Aug 98 04:18 PM
Sample : A60-3
Misc :
Quant Time: Aug 21 9:13 1998

Vial: 4
Operator: [GC]MS
Inst : GC 3
Multiplr: 1.00

Method : C:\HPCHEM\1\METHODS\A60F0820.M
Title :
Last Update : Fri Aug 21 09:23:30 1998
Response via : Multiple Level Calibration

Volume Inj. : 1 uL
Signal Phase : RTX-CLPESTICIDE
Signal Info : 0.53

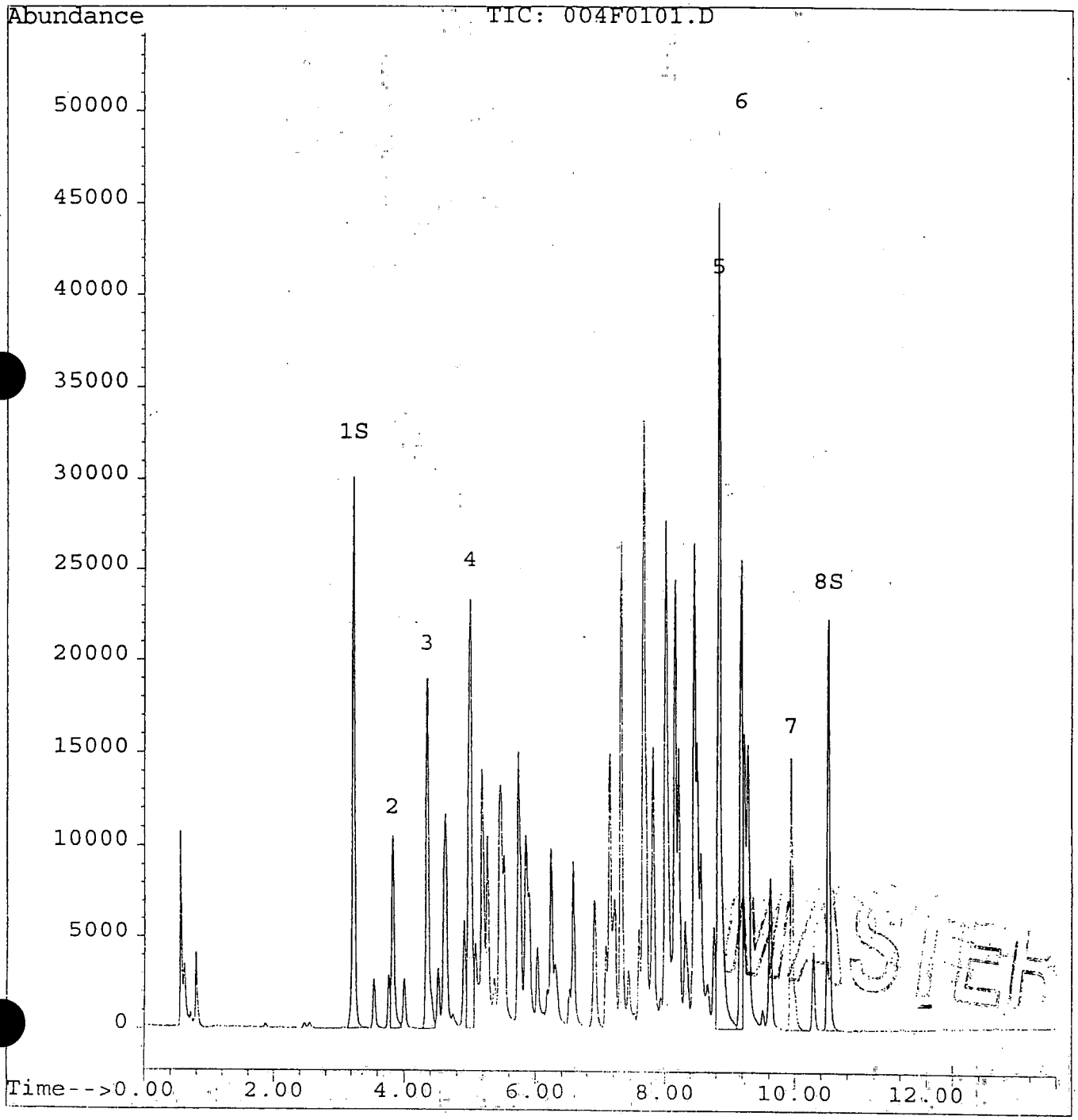

Quantitation Report

Data File : C:\HPCHEM\1\DATA\GE08209A\024F0101.D
Acq On : 20 Aug 98 09:50 PM
Sample : A21-3
Misc :
Quant Time: Aug 21 10:01 1998

Vial: 24
Operator: [GC]MS
Inst : GC 3
Multiplr: 1.00

Method : C:\HPCHEM\1\METHODS\A21F0820.M
Title :
Last Update : Fri Aug 21 10:04:00 1998
Response via : Multiple Level Calibration

Volume Inj. : 1 uL
Signal Phase : RTX-CLPESTICIDE
Signal Info : 0.53

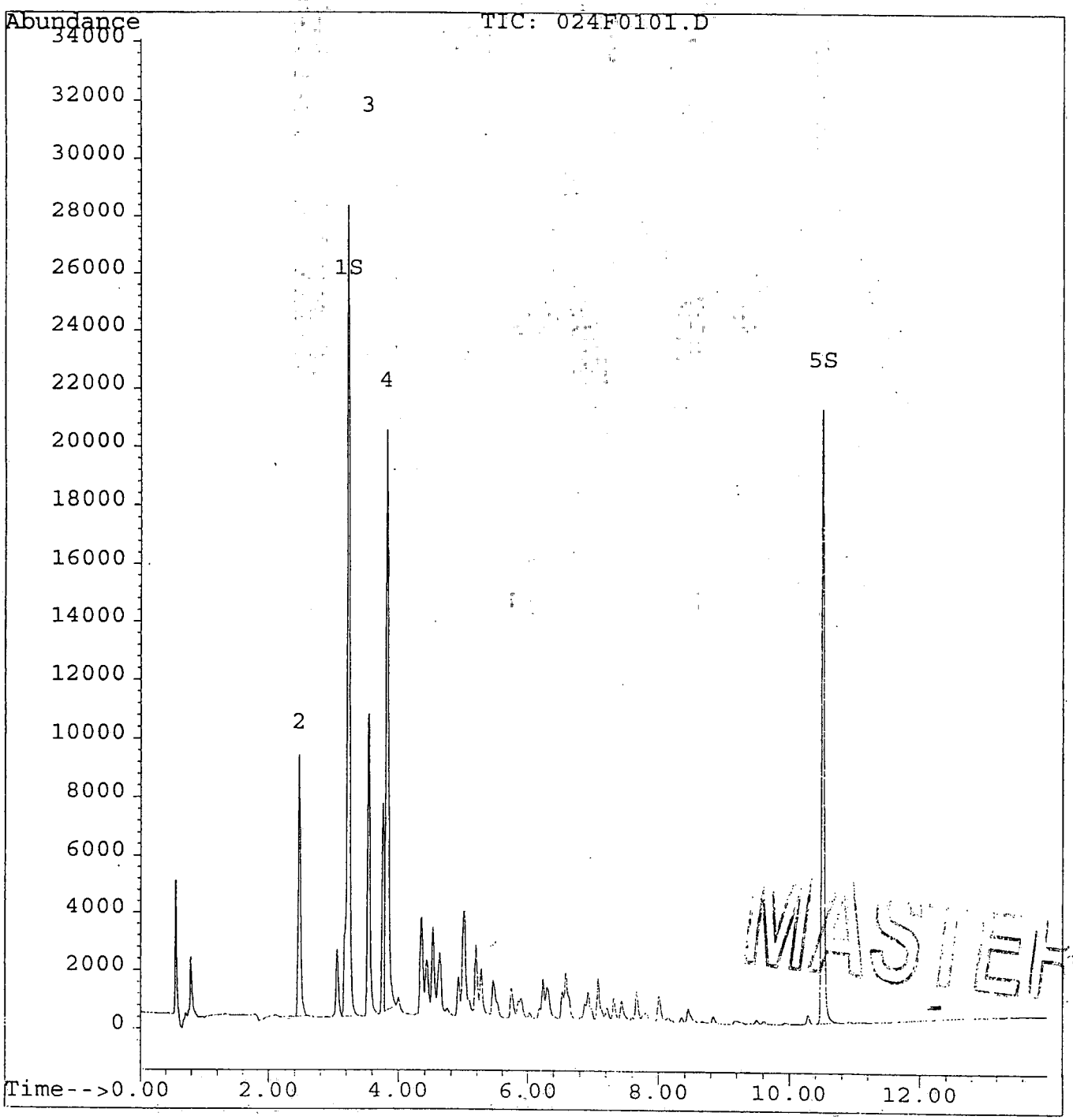

MASTER

Data File : C:\HPCHEM\1\DATA\GE08209A\019F0101.D
Acq On : 20 Aug 98 08:27 PM
Sample : A48-3
Misc :
Quant Time: Aug 21 9:54 1998

Vial: 19
Operator: [GC]MS
Inst : GC 3
Multiplr: 1.00

Method : C:\HPCHEM\1\METHODS\A48F0820.M
Title :
Last Update : Fri Aug 21 09:56:52 1998
Response via : Multiple Level Calibration

Volume Inj. :
Signal Phase :
Signal Info :

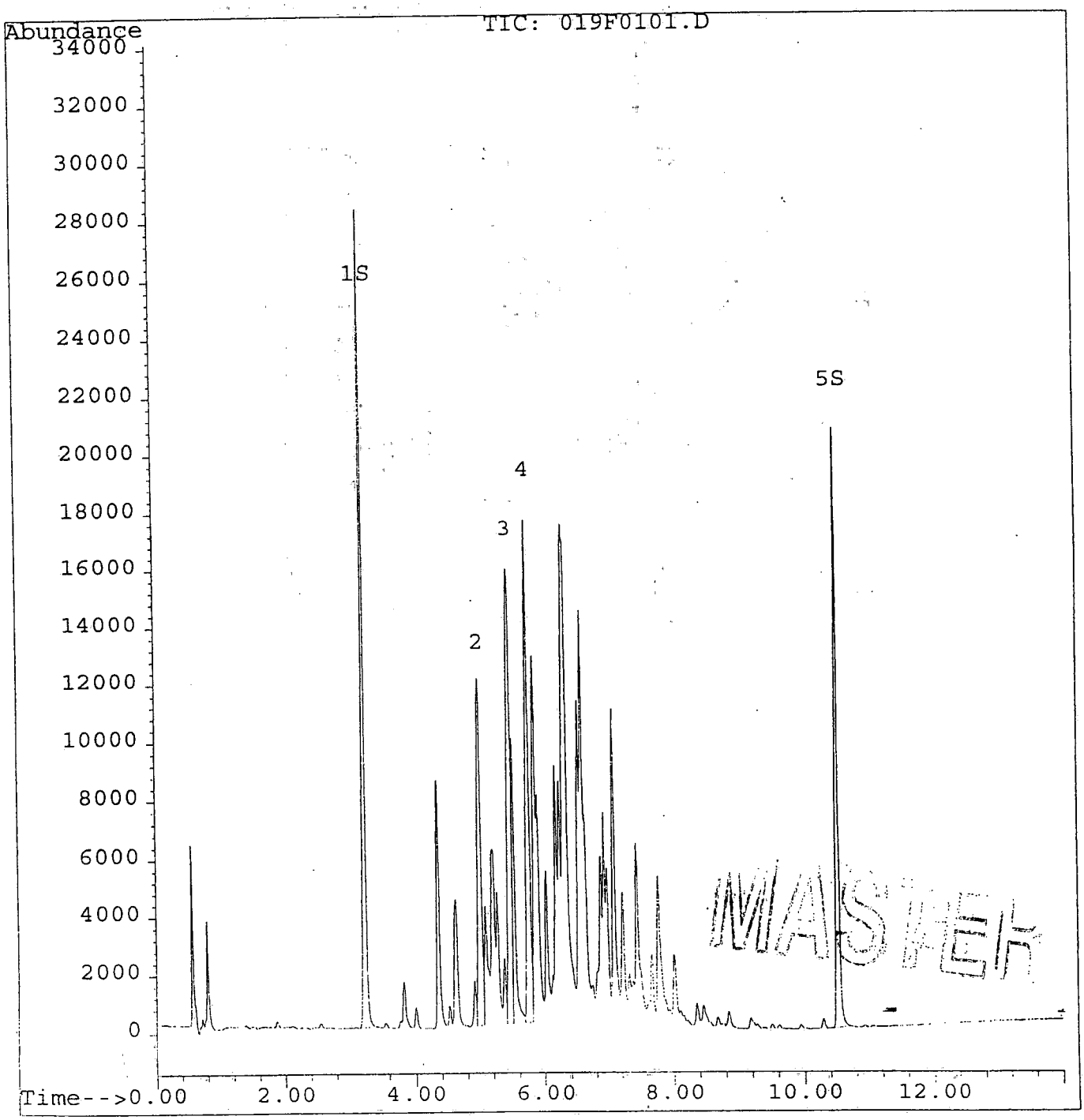

MASTER

Quantitation Report

Data File : C:\HPCHEM\1\DATA\GE08209A\009F0101.D
Acq On : 20 Aug 98 05:41 PM
Sample : A54-3
Misc :
Quant Time: Aug 21 9:36 1998

Vial: 9
Operator: [GC]MS
Inst : GC 3
Multiplr: 1.00

Method : C:\HPCHEM\1\METHODS\A54F0813.M
Title :
Last Update : Fri Aug 21 09:37:37 1998
Response via : Multiple Level Calibration

Volume Inj. : 1 uL
Signal Phase : RTX-CLPESTICIDE
Signal Info : 0.53

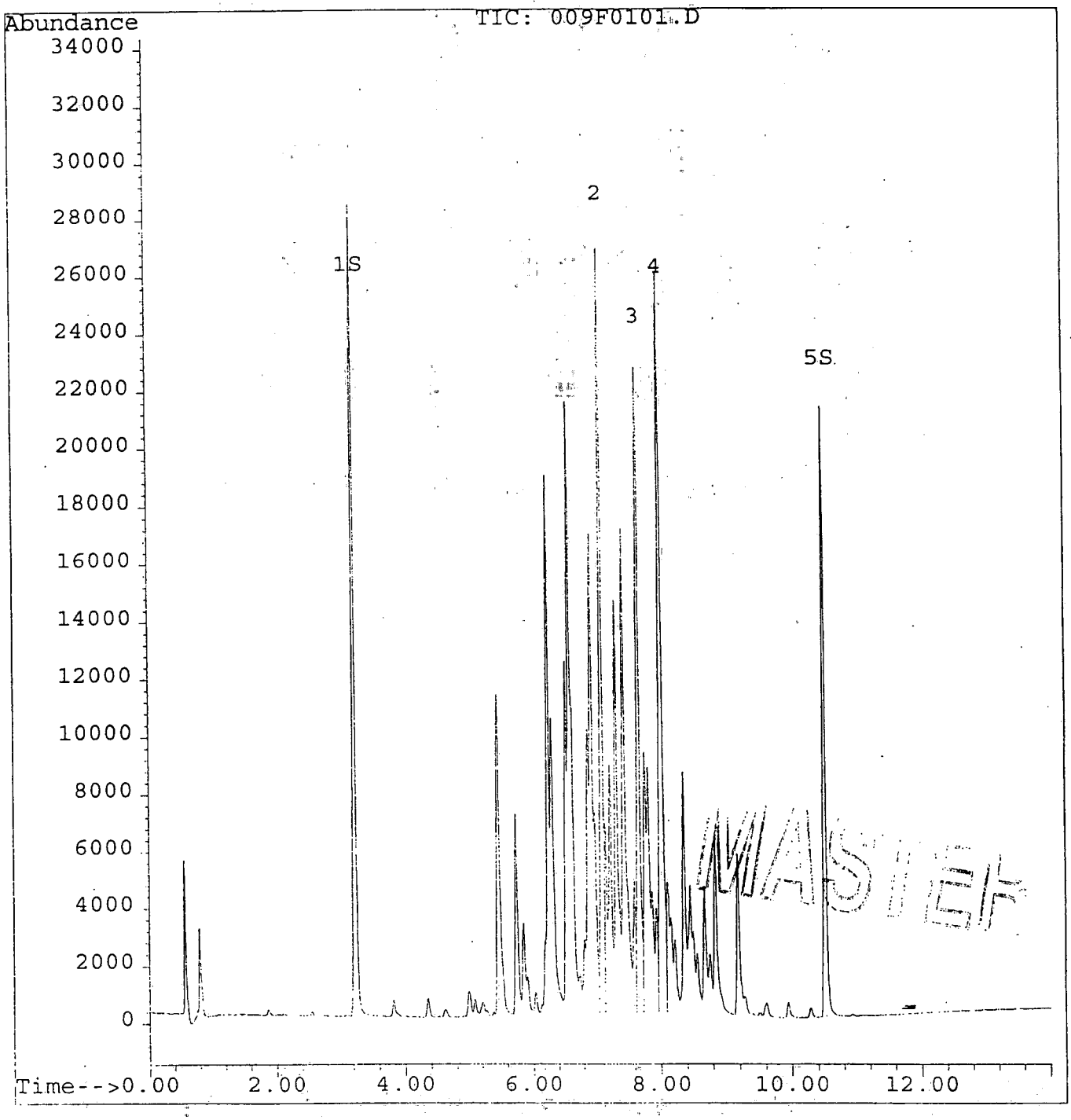

MASTER

ATTACHMENT E

Summary of Method Quality Objectives for Method 8082
Polychlorinated Biphenyls

QC Element	Frequency	Acceptance Criteria	Corrective Action
Initial Calibration	Instrument set up. Each time the ICV or CCV cannot meet criteria.	***Arochlor1016/1260*** • Minimum of 5 standards and contains all analytes • Low standard ≤ MRL • RSD≤20%, r≥0.995 (Do not force through zero). ***All other Arochlors*** • Single analysis at the reporting limit. • Evaluate quantitation at the low standard. Requanting the low standard should produce results within 70-130% of the true value.	• No allowance. Perform maintenance and recalibrate.
ICV – Second [illegible]rce [illegible]ification standard	Immediately following initial calibration.	• %Rec = 80-120%. (MAMCP: 80-120%)	• If criteria are exceeded then remake and re-analyze ICV. If second consecutive ICV is within acceptable criteria then calibration is accepted, otherwise re-calibrate. (Option 2: re-analyze 2 consecutive CCV at 2 concentrations.)
CCV	Prior to sample analysis, every 12 hours and every 20 samples and at the end of each analytical sequence.	***Arochlor 1016/1260*** • Concentration level near midpoint of curve. • Percent difference or percent drift must be 80-120%. Performed routinely for 1242/1254, all others must be analyzed within 12 hours of sample analysis.	• If criteria are exceeded then remake and re-analyze CCV. If second consecutive CCV is within criteria then calibration is verified, otherwise re-calibrate system and re-analyze any sample analyzed after the last valid CCV. Also, Option 2 from above is allowed. ***Exception: If CCV is exhibiting high bias (concentration is higher than upper limit) then any samples that are non-detect for that analyte may be reported.***

MASTER

ESS Laboratory. This document may be reproduced solely for internal use.

Method Blank	One per analytical batch of 20 or fewer samples.	• Matrix specific • Analytes < MRL	• Report exceedance in the project narrative. • Any samples that are non-detect for that analyte may be reported. • Samples with concentrations that are 20x higher than the method blank may be reported. • Samples reported with a contaminated blank must be "B" flagged. • Re-extract if the above exceptions do not apply. If re-extract is within hold, report just the re-extracted data. If re-extract is outside hold then report both sets of data to client.
Blank spike/ Blank spike duplicate	One per analytical batch of 20 or fewer samples.	• Use standard source different than used for initial calibration • Concentration level should be between low and mid-level standard • Matrix specific • Percent recoveries between 40-140% and 30%RPD • Laboratories must develop in-house limits that are within above criteria.	• Report exceedance in the project narrative. • If the BS/BSD exhibits high bias and the samples are non-detect, then the samples may be reported with no corrective action needed. • Re-extract if the above exceptions do not apply. If re-extract is within hold, report just the re-extracted data. If re-extract is outside hold then report both sets of data to client.
Matrix Spike/ Matrix Spike duplicate	One per analytical batch of 20 or fewer samples	• Prepared using the same source as the blank spike • Concentration between low and mid-level standard • Matrix specific • Percent recoveries between 40-140. Laboratories should develop in-house limits. • RPD should be ≤ 50% • (MAMCP RPD <20 waters, <30 Soils)	• Check BS, if recoveries are acceptable then note exceedance in project narrative.

MASTER

ESS Laboratory. This document may be reproduced solely for internal use.

Surrogates	Added to all samples and standards.	• Use a minimum of 2 surrogates. • Percent recovery of 30-150 • MCP requires that both columns and both surrogates be within criterion and reported.	• If the same surrogate is outside of limits on both columns, re-extract samples. If both surrogates are outside criteria on one column only, re-analyze extract • If a surrogate is diluted to a concentration below the lowest standard, then no corrective action is needed. • If surrogates are outside criteria for re-extract, report both sets of data. • If re-extract is within hold and within criteria, report just the re-extracted data. If re-extract is outside hold then report both sets of data to client. • Note exceedance in project narrative. If sample is not re-analyzed due to obvious interference (e.g., UCM), the chromatogram is to be included in the final report.
Identification and Quantitation		• Secondary column analysis: Laboratory must utilize a second dissimilar column to confirm positive pesticide results. • The lab must report the higher of the two results. • All QA/QC requirements must be met on secondary column as well. • Analytes must fall within retention time windows.	• Flag data that is >40% RPD between two columns. • IF high RPD can be attributed to interference on one of the two columns, the lab should report the lower value and provide a discussion in the case narrative that this approach was employed.

MASTER

ESS Laboratory. This document may be reproduced solely for internal use.

ATTACHMENT F - Specific Requirements for Method 608

QC Element	Frequency	Criteria	Corrective Action
Initial Calibration	Instrument set up. Each time the ICV or CCV cannot meet criteria.	• Minimum of 3 standards and contains all analytes • Low standard ≤ MRL • RSD≤10%, r≥0.995,r^2≥0.99	• No allowance. Perform maintenance and recalibrate.
ICV – second source verification standard	Immediately following initial calibration.	• %Rec = 80-120% • Must contain all target analytes. • No allowances	• If criteria are exceeded then remake and re-analyze ICV. If second consecutive ICV is within acceptable criteria then calibration is accepted, otherwise recalibrate. • Report exceedance in narrative
CCV	Prior to sample analysis, every 12 hours and every 10 field samples and at the end of each analytical sequence.	• Concentration level near midpoint of curve • Must contain all target analytes. • Percent difference or percent drift must be ≤ 15%.	• If criteria are exceeded then remake and re-analyze CCV. If second consecutive CCV is within criteria then calibration is verified, otherwise re-calibrate system and re-analyze any sample analyzed after invalid CCV.
Method Blank	One per analytical batch of 20 or fewer samples.	• Matrix specific • Analytes < ½ MRL	• Report exceedance in the project narrative. • Any samples that are non-detect for that analyte may be reported. • Samples with concentrations that are 20x higher than the method blank may be reported. • Samples reported with a contaminated blank must be "B" flagged. • Re-extract if the above exceptions do not apply. If re-extract is within hold, report just the re-extracted data. If re-extract is outside hold then report both sets of data to client.
Blank spike/	Prior to sample analysis,	• Prepared using standard source different than used	• Report exceedance in the project narrative.

ESS Laboratory. This document may be reproduced solely for internal use.

Blank spike duplicate	every 12 hours and every 10 field samples and at the end of each analytical sequence.	for initial calibration • Concentration level should be between low and mid-level standard • Must contain all single component analytes • Matrix specific • Percent recoveries per Table 3 of Method 608.	• Re-extract if the above exceptions do not apply. If re-extract is within hold, report just the re-extracted data. If re-extract is outside hold then report both sets of data to client.
Matrix Spike/ Matrix Spike duplicate	Prior to sample analysis, every 12 hours and every 10 field samples and at the end of each analytical sequence.	• Prepared using the same source as the blank spike • Concentration between low and mid-level standard • Must contain all single component analytes • Matrix specific • Percent recoveries per Table 3 of Method 608.	• Check BS/BSD, if recoveries are acceptable then note exceedance in project narrative.

ESS Laboratory. This document may be reproduced solely for internal use.

Table V.A-1 Specific QC Requirements and Performance Standards for PCBs (SW-846 8082A) Using WSC-CAM V.A

Required QC Parameter	Data Quality Objective	Required Performance Standard	Required Deliverable?	Rejection Criteria per WSC-07-350[1]	Required Corrective Action	Required Analytical Response Action
Initial Demonstration of Proficiency	Laboratory Analytical Accuracy & Precision	(1) Must be performed prior to using method on samples. (2) Must be performed for each matrix. (3) Must contain Aroclors 1016/1260 for PCB Aroclor analysis and all target congeners for PCB congener analysis. (4) Must follow procedure in Section 8.4 of SW-846 8000B.	No	NA	Refer to Section 8.4 of SW-846 8000B and Section 1.1.2 of this protocol.	NA
Retention Time Windows	Laboratory Analytical Accuracy	(1) Prior to initial calibration and when a new GC column is installed. (2) Calculated according to the method (Section 7.6 of SW-846 8000B). (3) If acid cleanup is not performed, also analyze DDT/DDE/DDD standard.	No	NA	(1) For PCB Aroclor analysis, if interference is present for any of the Aroclor peaks used for quantitation with DDT, DDE, or DDD, either adjust GC conditions to obtain better resolution or choose another peak for the Aroclor of interest that does not coelute with DDT, DDE, or DDD. (2) For PCB congener analysis, if interference is present for any of the target congeners with DDT, DDE, or DDD, adjust GC conditions to obtain better resolution.	NA
Initial Calibration	Laboratory Analytical Accuracy	(1) Must be analyzed at least once prior to analyzing samples, when initial calibration verification or continuing calibration does not meet the performance standards, and when major instrument maintenance is performed. (2) Minimum of 5 standards (or 6 if non-linear regression used).	No	NA	(1) Recalibrate as required by method. (2) If recalculated concentrations from the lowest calibration standard are outside of 70-130% recovery range, either: • The RL limit must be	Sample analysis cannot proceed without a valid initial calibration. Report non-conforming compounds (%RSD >20, r <0.99, or r^2 <0.99) in laboratory narrative. If non-linear regression (e.g., quadratic equation) is used for calibration,

Table V A-1: Specific QC Requirements and Performance Standards for PCBs (SW-846 8082A) Using WSC-CAM-V A

Required QC Parameter	Data Quality Objective	Required Performance Standard	Required Deliverable?	Rejection Criteria per WSC-07-350	Required Corrective Action	Required Analytical Response Action
		(3) *PCB Aroclors:* 5-point calibration with 1016/1260 required; 5-point calibration for other Aroclors may be warranted based on site-specific conditions (i.e., if nature of PCB contamination known). *Congeners:* 5-point calibration must include all target PCB congeners. (4) A minimum of 5 unique peaks must be evaluated for Aroclors 1016 and 1260. (5) Low standard must be ≤RL. (6) %RSD ≤20, r ≥0.99 (linear regression), or r^2 ≥0.99 (non-linear regression) for each PCB Aroclor or each PCB congener. (7) If %RSD >20, linear or non-linear regression must be used. (8) PCB Aroclors: For Aroclors which are not calibrated with 5-points, laboratory must perform single analysis of these Aroclors at the midpoint of the calibration curve. (9) Calibration must be performed under the same conditions as the samples. (10) If linear or non-linear regression used, verify the RL by recalculating concentrations in lowest calibration standard using the final calibration curve; recoveries must be 70-130%.			reported as an estimated value[2], or • The RL must be raised to the concentration of the next highest calibration standard that exhibits acceptable recoveries when recalculated using the final calibration curve.	this must be noted in the laboratory narrative along with the congeners or PCB Aroclors affected.
Initial Calibration Verification	Laboratory Analytical Accuracy	(1) Immediately after each initial calibration. (2) Concentration level near midpoint of curve. (3) Prepared using standard source different than used for initial	No	NA	Locate source of problem; recalibrate if either PCB Aroclor 1016/1260 or >10% of all PCB congeners are outside of criteria.	If recovery is outside of 80-120% for any PCB Aroclor or congener, report non-conformances in laboratory narrative.

Table V A-1. Specific QC Requirements and Performance Standards for PCBs (SW-846 8082A) Using WSC-CAM-V A

Required QC Parameter	Data Quality Objective	Required Performance Standard	Required Deliverable?	Rejection Criteria per WSC-07-350	Required Corrective Action	Required Analytical Response Action
		calibration. (4) Must contain Aroclors 1016/1260 for PCB Aroclor analysis and all target congeners for PCB congener analysis. (5) Percent recoveries must be between 80-120% for each PCB Aroclor or congener.				
Continuing Calibration	Laboratory Analytical Accuracy	(1) Prior to samples, every 12 hours or every 20 samples, whichever is more frequent, and at the end of the analytical sequence. (NOTE: if internal standard calibration used, the continuing calibration at the end of the analytical sequence is not required). (2) Concentration level near midpoint of curve. (3) *PCB Aroclors:* Must contain Aroclors 1016/1260. Aroclors other than 1016/1260 must be verified with a one-point standard within 12 hours of being detected in a sample. *Congeners:* Must include all target PCB congeners. (4) %D must be ≤20 for each PCB Aroclor or PCB congener. (5) Verify that all analytes fall within retention time windows. (6) Area count of internal standard in continuing calibration must be within ±50% of the average area count in the associated initial calibration.	No	NA	(1) Perform instrument maintenance, reanalyze continuing calibration and/or recalibrate as required by method. (2) Renalyze "associated samples" if beginning or ending continuing calibration exhibited low response. (3) Reanalyze "associated samples" if beginning or ending continuing calibration exhibited high response and associated PCB Aroclors or congeners were detected in the "associated samples." NOTE: "Associated samples" refers to all samples analyzed since the last acceptable continuing calibration.	Report non-conforming compounds (%D >20) and associated samples in laboratory narrative.
Method Blank	Laboratory Method Sensitivity (contamination evaluation)	(1) Extracted with every batch or every 20 samples, whichever is more frequent. (2) Matrix-specific (e.g., water, soil).	Yes	NA	(1) If concentration of contaminant in sample is <10x concentration in blank, locate source of	(1) If sample re-extraction is not possible, report non-conformance in

Table V.A-1. Specific QC Requirements and Performance Standards for PCBs (SW-846 8082A) Using WSC-CAM V.A

Required QC Parameter	Data Quality Objective	Required Performance Standard	Required Deliverable?	Rejection Criteria per WSC-07-350	Required Corrective Action	Required Analytical Response Action
		(3) Target analytes must be <RL.			contamination; correct problem; re-extract and re-analyze method blank and associated samples. (2) No corrective action required if concentration of contaminant in sample is >10x concentration in blank or if contaminant not detected in sample.	laboratory narrative. (2) If contamination of method blanks is suspected or present, the laboratory, using a "B" or some other convention, should qualify the sample results. Blank contamination should also be documented in the laboratory narrative. (3) If re-extraction is performed within holding time and yields acceptable method blank results, the laboratory may report results of the re-extraction only. (4) If re-extraction is performed outside of holding time, the laboratory must report results of both the initial extraction and re-extraction.

Quality Control Requirements and Performance Standards for the ***Analysis of Polychlorinated Biphenyls (PCBs) by Gas Chromatography (GC)*** in Support of Response Actions under the Massachusetts Contingency Plan (MCP)

Table V.A-1: Specific QC Requirements and Performance Standards for PCBs (SW-846 8082A) Using WSC-CAM-V.A

Required QC Parameter	Data Quality Objective	Required Performance Standard	Required Deliverable?	Rejection Criteria per WSC-07-350	Required Corrective Action	Required Analytical Response Action
Laboratory Control Sample (LCS)	Laboratory Analytical Accuracy	(1) Extracted with every batch or every 20 samples, whichever is more frequent. (2) Concentration level near midpoint of curve. (3) *PCB Aroclors:* 1016/1260 required. Optionally, LCSs may be spiked with other Aroclors which have been fully calibrated, based on site-specific conditions (i.e., if specific Aroclors are known to be present or expected in samples). *Congeners:* Must include all target PCB congeners. (4) Matrix-specific (e.g., soil, water). (5) Percent recoveries must be between 40-140% for target analytes. (6) Must be prepared in a water-miscible solvent (e.g., acetone, methanol).	Yes	Recovery <10%; affects nondetect results for affected PCB Aroclor or PCB congener in all samples extracted with this LCS.	(1) Locate source of problem; re-extract and re-analyze LCS and associated samples if either Aroclor 1016/1260 or >10% of all PCB congeners are outside of criteria. (2) If ≤10% of PCB congeners are outside of the acceptance criteria, re-extraction is not required as long as recoveries are >10%. (3) If >10% of PCB congeners or either Aroclor 1016/1260 are above the acceptance criteria (>140), reextraction is not required if the affected congeners or all PCB Aroclors were not detected in associated samples.	(1) If sample re-extraction is not possible, report nonconformance in laboratory narrative. (2) If recovery is outside of 40-140% for any PCB Aroclor or congener, report non-conforming compounds in laboratory narrative. (3) If re-extraction is performed within holding time and yields acceptable LCS results, the laboratory may report results of the re-extraction only. (4) If re-extraction is performed outside of holding time, the laboratory must report results of both the initial extraction and re-extraction.
LCS Duplicate	Laboratory Analytical Accuracy & Precision	(1) Extracted with every batch or every 20 samples, whichever is more frequent. (2) Concentration level near midpoint of curve. (3) *PCB Aroclors:* 1016/1260 required. Optionally, LCS Duplicates may be spiked with other Aroclors which have been fully calibrated, based on site-specific conditions (i.e., if specific Aroclors are known to be present or expected in samples).	Yes	Recovery <10%; affects nondetect results for affected PCB Aroclor or PCB congener in all samples extracted with this LCS.	(1) Locate source of problem; re-extract and re-analyze LCS and associated samples if either Aroclor 1016/1260 or >10% of all PCB congeners are outside of recovery acceptance criteria. (2) If ≤10% of PCB congeners are outside of the recovery acceptance	(1) If sample re-extraction is not possible, report nonconformance in laboratory narrative. (2) If recovery is outside of 40-140% for any PCB Aroclor or congener or if RPD is outside of criteria, report non-conforming compounds in laboratory

Table V A-1: Specific QC Requirements and Performance Standards for PCBs (SW-846 8082A) Using WSC-CAM-V A

Required QC Parameter	Data Quality Objective	Required Performance Standard	Required Deliverable	Rejection Criteria per WSC-07-350	Required Corrective Action	Required Analytical Response Action
		Congeners: Must include all target PCB congeners. (4) Matrix-specific (e.g., soil, water). (5) Percent recoveries must be between 40-140% for target analytes. (6) RPDs must be ≤20 for waters and ≤30 for solids. (7) Must be prepared in a water-miscible solvent (e.g., acetone, methanol).			criteria, re-extraction is not required as long as recoveries are >10%. (3) If >10% of PCB congeners or either Aroclor 1016/1260 are above the recovery acceptance criteria (>140%), reextraction is not required if the affected congeners or all PCB Aroclors were not detected in associated samples.	narrative. (3) If re-extraction is performed within holding time and yields acceptable LCS results, the laboratory may report results of the re-extraction only. (4) If re-extraction is performed outside of holding time, the laboratory must report results of both the initial extraction and re-extraction.
MS/MSD	Method Accuracy & Precision in Sample Matrix	(1) Every 20 samples (at discretion of laboratory or at request of data user). (2) Matrix-specific. (3) Concentration level near midpoint of curve. (4) *PCB Aroclors:* 1016/1260 required. Optionally, MS/MSDs may be spiked with other PCB Aroclors which have been fully calibrated, based on site-specific conditions (i.e., if specific Aroclors known to be present or expected in samples). *Congeners:* Must include all target PCB congeners. (5) Percent recoveries between 40 – 140%. (6) RPDs ≤20 for waters and ≤30 for solids. (7) Must be prepared in a water-miscible solvent (e.g., acetone, methanol).	Yes ONLY when requested by the data user	Recovery <10%; affects nondetect result for affected PCB Aroclor or PCB congener in unspiked sample only.	Check LCS; if recoveries are acceptable in LCS, narrate non-conformance.	Note exceedances in laboratory narrative.

Table V.A-1: Specific QC Requirements and Performance Standards for PCBs (SW-846 8082A) Using WSC-CAM V.A

Required QC Parameter	Data Quality Objective	Required Performance Standard	Required Deliverable?	Rejection Criteria per WSC-07-350	Required Corrective Action	Required Analytical Response Action
Surrogates	Method Accuracy in Sample Matrix	(1) Minimum of 2 surrogates, one that elutes at beginning of GC run and one that elutes at end of GC run. Recommended surrogates: *PCB Aroclor analysis:* TCMX and DCB *PCB Congener analysis:* TCMX or DBOFB and BZ198 (2) Percent recoveries must be between 30-150% for both surrogates on both columns.	Yes (report surrogate recoveries from both columns)	Recovery <10%; affects all nondetect results in affected sample.	If the same surrogate is outside limits on both columns: (1) Re-extract the sample if surrogate recoveries are low and there is no chromatographic interference. (2) Re-extract the sample if surrogate recoveries are high and PCB Aroclors or PCB congeners were detected in the sample. NOTES: (a) If surrogate recoveries are high and target analytes are not detected in sample, re-extraction is not required. (b) If chromatographic interference is present and surrogate recovery would cause rejection of data (i.e., <10%), reanalyze sample on dilution. (c) If a surrogate is diluted to a concentration below that of the lowest calibration standard, reextraction and/or reanalysis is not required.	(1) Report recoveries outside of 30-150% in laboratory narrative. (2) If re-extraction yields similar surrogate non-conformances, the laboratory must report results of both the initial extraction and re-extraction. (3) If re-extraction is performed within holding time and yields acceptable surrogate recoveries, the laboratory may report results of the re-extraction only. (4) If re-extraction is performed outside of the holding time and yields acceptable surrogate recoveries, the laboratory must report results of both the initial extraction and re-extraction. (5) If sample is not re-extracted due to chromatographic interference, the laboratory must provide the chromatogram in the data report.
Internal Standards (Congeners only)	Laboratory Analytical Accuracy and Method Accuracy in	(1) Minimum of 1. Recommended internal standard: DCB (2) Area counts in samples must be between 50 – 200% of the area counts	No	Recovery <20%; affects all nondetect results quantitated using	If internal standard is outside of limits, reanalyze sample unless chromatographic	(1) Report non-conformances in laboratory narrative. Include actual recovery

Table V-A-1: Specific QC Requirements and Performance Standards for PCBs (SW-846 8082A) Using WSC-CAM-V A

Required QC Parameter	Data Quality Objective	Required Performance Standard	Required Deliverable?	Rejection Criteria per WSC-07-350	Required Corrective Action	Required Analytical Response Action
	Sample Matrix	in the associated continuing calibration standard. (3) Retention times of internal standards must be within ±30 seconds of retention times in associated continuing calibration standard.		affected internal standard in associated sample.	interference present. NOTE: If chromatographic interference is present and internal standard area would cause rejection of data (i.e., <20%), reanalyze sample on dilution.	of internal standard and provide summary of analytes quantitated using the internal standard. (2) If reanalysis yields similar internal standard non-conformances, the laboratory must report results of both analyses. (3) If reanalysis is performed within holding time and yields acceptable internal standard recoveries, the laboratory may report results of the reanalysis only. (4) If reanalysis is performed outside of the holding time and yields acceptable internal standard recoveries, the laboratory must report results of both analyses. (5) If sample is not reanalyzed due to chromatographic interference, the laboratory must provide the chromatogram in the data report.
Identification and Quantitation	NA	(1) Peak area is the expected default to be used for quantitation of PCB Aroclors and congeners under most circumstances. Regardless if peak area or peak height is used, the same method used for quantitation of	NA	If RPD >100 for PCB congener, reject positive result for affected PCB congener. If RPD >500 for	If the RPD between the dual column results is >100 for PCB congeners or >500 for PCB Aroclors, reanalyze the sample on dilution. Both analyses	If the RPD between the dual column results exceeds 40, the laboratory must qualify the sample results and/or note the

Table V A-1: Specific QC Requirements and Performance Standards for PCBs (SW-846 8082A) Using WSC-CAM-V A

Required QC Parameter	Data Quality Objective	Required Performance Standard	Required Deliverable?	Rejection Criteria per WSC-07-350	Required Corrective Action	Required Analytical Response Action
		samples must also be used for calibration standards. (2) *PCB Aroclors:* The laboratory must quantitate all Aroclors with the same five peaks used for calibration. If interference exists with select peaks, these peaks do not have to be included in the quantitation of the Aroclor; however, a minimum of three peaks is required. All peaks must be ≥25% of the height of the largest PCB Aroclor peak. At least one peak must be unique to the PCB Aroclor. (3) *PCB Congeners:* The laboratory must use the average calibration factor, response factor, linear or non-linear regression curve generated from the associated initial calibration for quantitation of each PCB congener. *PCB Aroclors:* Laboratory should use the average calibration factor, linear or non-linear regression curve for each of three to five peaks from each concentration level to quantitate Aroclors 1016 and 1260. Laboratory should use the average calibration factor for each of three to five peaks from single point standard to quantitate remaining Aroclors (when only single-point standard analyzed). If 5-point calibration is performed for other Aroclors, follow procedure for 1016 and 1260. Calculate concentration of Aroclor using each individual peak and calculate the average concentration of the three to five results to obtain the final Aroclor concentration.		PCB Aroclor, reject positive result for affected PCB Aroclor.	must be reported. Alternatively, additional sample cleanup techniques may be warranted.	exceedance in the laboratory narrative. If the RPD exceedance is due to interference, the lower of the dual column values can be reported; this must be noted in the laboratory narrative.

Table V A-1: Specific QC Requirements and Performance Standards for PCBs (SW-846 8082A) Using WSC-CAM V A

Required QC Parameter	Data Quality Objective	Required Performance Standard	Required Deliverable?	Rejection Criteria per WSC-07-350	Required Corrective Action	Required Analytical Response Action
		(4) Secondary column analysis: Laboratory must utilize a second dissimilar column to confirm positive results. The laboratory must report the higher of the two results. All required QC parameters (e.g., calibrations, LCSs, etc.) must be met on the secondary column as well. (5) Results must be reported with 2 or more "significant figures" if ≥ RL. If reporting values below the RL, report with 1 or more "significant figures".[3]				
General Reporting Issues	NA	(1) The laboratory must only report values ≥ the sample-specific reporting limit. (2) Dilutions: If diluted and undiluted, analyses are performed, the laboratory should report results for the lowest dilution within the valid calibration range for each analyte. The associated QC (e.g., method blanks, surrogates, etc.) for each analysis must be reported. **NOTE: Laboratories shall not perform dilutions on samples due to sulfur interference. Laboratories must employ a cleanup technique to reduce the presence of sulfur interference.** **It is highly recommended that acid cleanup be performed on all sample extracts prior to analysis.** (3) Results for soils/sediments must be reported on a dry-weight basis for comparison to MCP regulatory standards. (4) Refer to Appendix V A-1 for chain-of-custody requirements regarding preservation, cooler temperature, and	NA	NA	NA	(1) Complete analytical documentation for diluted and undiluted analyses must be made available for review during an audit. (2) The performance of dilutions must be documented in the laboratory narrative or on the report form. Unless due to elevated concentrations of target compounds, reasons for dilutions must be explained in the laboratory narrative. (3) If PCB Aroclors are not detected but chromatogram shows evidence of weathered Aroclors or potential presence of PCBs, this must be noted in the laboratory narrative and a copy of the

ESS Laboratory
Division of Thielsch Engineering
Cranston, RI

SOP 60_8100-mod
Total Petroleum Hydrocarbons
(SW846 Method 8100 modified/Conn ETPH)
BY GC/FID

APPROVED BY:

Operations Manager	Date 10/8/13
QA Manager	Date 9/9/13
Laboratory Director	Date 10/11/13

MASTER

Master marked in red. Controlled copies marked in green.

Total Petroleum Hydrocarbons (SW846 Method 8100 modified/Conn ETPH)

1.0 SCOPE AND/OR APPLICATION

1.1 This method has been modified to determine the total petroleum hydrocarbon (TPH) content of samples from C_9-C_{36}. This range represents the major components of a number of petroleum products such as kerosene, jet and diesel fuel, No. 2 to 6 fuel oils and motor oils. This method can also be modified to include other petroleum hydrocarbon ranges (ex: C10-C28 for diesel range organics and C9-C40 for heavier petroleum products). Gasoline range organics are not quantitated by this method.

1.2 Components lighter than C_9 in products such as gasoline are also detectable but may be completely or partially lost during sample preparation.

1.3 The Reporting limits commonly used are as follows for the applicable matrices (preparative methods are listed in section 2.0):

Matrix	Weight Vol	Final Extract Vol	MRL
Water	1.0 liter	1.0 ml	200 ppb
Soil	20-30 g	1.0 ml	37.5-25 ppm
Waste Oil	1.0 g	10 ml	7500 ppm

2.0 Method Summary

2.1 This TPH method provides gas chromatographic conditions for the detection of total petroleum hydrocarbons in the C_9-C_{36} range. This procedure is based on a solvent extraction followed by analysis on a high-resolution capillary column gas chromatograph with duel flame ionization detectors. Sample preparation is discussed separately in the respective preparation SOP.

2.2 A capillary column and temperature program is used in the gas chromatograph to separate the organic compounds and a Flame Ionization Detector (FID) achieves detection.

2.3 Samples can be prepared by one of the following extraction methods, refer to the appropriate SOP:

MASTER

Matrix	Method #	Method Summary
Water	3510	Separatory Funnel Liquid-Liquid Extraction
Soil	3541	Automated Soxhlet Extraction
Soil	3546	Microwave Extraction
Oil	3580	Waste Dilution

ESS Laboratory. This document may be reproduced solely for internal use.

2.4 This method does not use specific petroleum products, like fuel oils, for calibration. Calibration and quantitation is based on the response of aliphatic hydrocarbons.

3.0 HEALTH AND SAFETY

3.1 Each employee has been trained and has acknowledged being trained in the safe use and handling of chemicals being used in the laboratory. This training has been performed according to the ESS Training SOP 80_0016 and by the Chemical Hygiene Plan SOP 90_0001 in conjunction with the Safety orientation

3.2 To minimize exposure, process samples in an exhaust hood or well-ventilated workspace. When working with samples and chemicals, wear gloves to minimize contact and possible absorption. Always wear appropriate eye protection.

3.3 Proper emergency response to spills or injury should be reviewed by the laboratory employee prior to attempting this procedure. This includes location of spill kits, emergency eyewash and showers, fire fighting equipment, as well as evacuation routes.

3.4 Material Safety Data Sheets are available for all chemicals used in this procedure. All laboratory employees are required to read these before handling these chemicals.

4.0 SAMPLE PRESERVATION, CONTAINERS, HANDLING AND STORAGE

4.1 Aqueous samples are collected in 1 liter amber glass bottles with Teflon-lined screw caps. Aqueous samples are preserved to a pH of <2 with 1:1 HCl and cooled to 4°C immediately after collection.

4.2 Soil and sediment samples are collected in 4 or 8 oz (120 ml to 200 ml) amber wide-mouth glass jars with Teflon-lined screw caps and cooled to 4°C immediately after collection.

4.3 Aqueous samples must be extracted within 7 days of collection (except for MassDEP which allows 14 days) and analyzed within 40 days of extraction.

4.4 Soil and sediment samples must be extracted within 14 days of collection, and analyzed within 40 days of extraction.

5.0 INTERFERENCES AND POTENTIAL PROBLEMS

MASTER

5.1 Method interferences are reduced by washing all glassware with hot soapy water and then rinsing with warm tap water, acetone or methanol, and methylene chloride.

5.2 High purity reagents must be used to minimize interference problems.

5.3 Contamination by carryover can occur whenever high-level and low-level samples are sequentially analyzed. Whenever an unusually concentrated sample is analyzed, it must be followed by the analysis of a system solvent blank to check for cross-contamination.

ESS Laboratory. This document may be reproduced solely for internal use.

2.4 This method does not use specific petroleum products, like fuel oils, for calibration. Calibration and quantitation is based on the response of aliphatic hydrocarbons.

3.0 HEALTH AND SAFETY

3.1 Each employee has been trained and has acknowledged being trained in the safe use and handling of chemicals being used in the laboratory. This training has been performed according to the ESS Training SOP 80_0016 and by the Chemical Hygiene Plan SOP 90_0001 in conjunction with the Safety orientation

3.2 To minimize exposure, process samples in an exhaust hood or well-ventilated workspace. When working with samples and chemicals, wear gloves to minimize contact and possible absorption. Always wear appropriate eye protection.

3.3 Proper emergency response to spills or injury should be reviewed by the laboratory employee prior to attempting this procedure. This includes location of spill kits, emergency eyewash and showers, fire fighting equipment, as well as evacuation routes.

3.4 Material Safety Data Sheets are available for all chemicals used in this procedure. All laboratory employees are required to read these before handling these chemicals.

4.0 SAMPLE PRESERVATION, CONTAINERS, HANDLING AND STORAGE

4.1 Aqueous samples are collected in 1 liter amber glass bottles with Teflon-lined screw caps. Aqueous samples are preserved to a pH of <2 with 1:1 HCl and cooled to 4°C immediately after collection.

4.2 Soil and sediment samples are collected in 4 or 8 oz (120 ml to 200 ml) amber wide-mouth glass jars with Teflon-lined screw caps and cooled to 4°C immediately after collection.

4.3 Aqueous samples must be extracted within 7 days of collection, and analyzed within 40 days of extraction.

4.4 Soil and sediment samples must be extracted within 14 days of collection, and analyzed within 40 days of extraction.

5.0 INTERFERENCES AND POTENTIAL PROBLEMS

5.1 Method interferences are reduced by washing all glassware with hot soapy water and then rinsing with warm tap water, acetone or methanol, and methylene chloride.

5.2 High purity reagents must be used to minimize interference problems.

5.3 Contamination by carryover can occur whenever high-level and low-level samples are sequentially analyzed. Whenever an unusually concentrated sample is analyzed, it must be followed by the analysis of a system solvent blank to check for cross-contamination.

MASTER

5.4 To minimize mass discrimination, the injection system must be cleaned on a regular basis. Loss of the heavier hydrocarbon C_{28} – C_{36} response can occur after running highly contaminated samples.

5.5 C36 response is greatly affected by the length of column inserted into the injection port. To meet Connecticut criteria, insert a column length of 4-5 mm into the GC inlet.

6.0 APPARATUS AND MATERIALS

6.1 Gas Chromatograph HP 5890 Series II.

6.2 HP7673 Autosamplers.

6.3 Dual FID (Flame Ionization Detector).

6.4 Column DB-5 (J&W) 30m * 0.25 mm ID * 0.5 um film thickness or equivalent

6.5 Vials.

6.5.1 Sample vials with Teflon lined crimp tops.

6.5.2 14 ml glass vials with Teflon lined caps.

6.6 Volumetric flasks 10 ml-100 ml.

6.7 Microsyringes 10 µl, 100 µl , 250 µl, 500 µl, 1000 µl.

6.8 **Data system**:

6.8.1 **Computer:** The Semi-Volatiles laboratory has one GC/FID system analyzing method 8100-mod. SVOA GC2 has an AST computer with a Windows 95 operating system. All computer systems are networked to a central server, which is the destination of all files. A differential back-up is performed nightly and a full back is performed each weekends.

6.8.2 **Software:** HP/Agilent Environmental Chemstation - The software is interfaced to the flame ionization detectors and allows the continuous acquisition and storage on machine-readable media of all chromatograms obtained throughout the duration of the instrument program. The software is capable of integrating the abundance in any peak between specified times. Current versions G1045A version 01.00.

MASTER

7.0 REAGENTS AND STANDARDS

7.1 **Reagents**

ESS Laboratory. This document may be reproduced solely for internal use.

7.1.1 Reagent Water: organic free water (ASTM Type I reagent grade water).

7.1.2 Solvents: methylene chloride, acetone, methanol; pesticide grade or better.

7.1.3 Sodium sulfate: (ACS) granular, anhydrous.

7.1.4 Ottawa and/or masonry sand: free of extractable petroleum hydrocarbons.

7.2 **Standards**: Store all standard solutions (primary, stock, and working) at room temperature in the dark. Surrogate and spiking solutions are refrigerated at 4C +/- 2.

7.2.1 **Primary Standards**: Unopened primary standards are not kept beyond the manufacturer's expiration date and, once opened, primary standards are not kept beyond six months, or the manufacturer's expiration date (whichever comes first).

Solution name	Concentration	Vendor	Cat #
Aliphatic Hydrocarbon Standard	1000 µg/ml	Ultra	SMA-310
Aliphatic Hydrocarbon Standard (Second source)	1000 µg/ml	Accustandard	*
o-Terphenyl (Surrogate)	2000 µg/ml	Ultra	IST-480
n-Tetracontane (C40)**	1000 µg/ml	Absolute	71220

* Proposed Mass DEP – Aliphatic Hydrocarbons DRH-007S
** In Carbon Disulfide.

7.2.2 **Calibration Stock Standard:** This calibration standard is prepared by making a 1:2 dilution of the primary standard. Five ml of the primary aliphatic hydrocarbon standard and 2.5 ml of the o-Terphenyl primary standard is diluted to 10 ml in a 10 ml class A volumetric with methylene chloride. The final concentration for these standards will be 500 mg/L. The following analytes are in this mix:

Carbon #		Carbon #		Carbon #	
9	n-Nonane	**18**	n- Octodecane	**26**	n- Hexacosane
10	n-Decane	**19**	n-Nonadecane	**28**	n-Octacosane
12	n- Dodecane	**20**	n-Eicosane	**30**	n- Triacontane
14	n-Tetradecane	**22**	n- Docosane	**36**	n-Hexatriacontane
16	n- Hexadecane24	n- Tetracosane	**40**	n-Tetracontane*	

o-Terphenyl (Surrogate)

***Retention time marker only**

MASTER

7.2.3 **Working Calibration Standards**:

7.2.3.1 The lower linear range of the system is defined as the collective response of the 14 aliphatic compounds (70-ppm for the c9-c36 range when the lowest aliphatic standard is the one with each aliphatic

compound at 5ppm). The upper linear range for the collective C_9-C_{36} aliphatics is defined by peak height measurement based upon the maximum peak height documented for the 500-ppm aliphatic working standard. If the 500 µg/ml standard is not used for calibration then the 250 µg/ml standard will define the linear dynamic range.

7.2.3.2 Prepare working solutions for initial and daily calibrations by transferring the following volumes of stock solution using Methylene Chloride as the dilution solvent.

Cal Stock Conc.	Vol. added	Final Vol.	Final Aliph.Conc. C_9-C_{36} ppm	
500 ug/ml	1000 ul	1.0 ml	500 ug/ml	7000
500 ug/ml	500 ul	1.0 ml	250 ug/ml	3500
500 ug/ml	200 ul	1.0 ml	100 ug/ml (CCV)	1400
500 ug/ml	100 ul	1.0 ml	50 ug/ml	700
500 ug/ml	20 ul	1.0 ml	10 ug/ml	140
500 ug/ml	10 ul	1.0 ml	5 ug/ml	70
10 ug/ml	100 ul	1.0 ml	1 ug/ml	14

7.2.4 **Second Source calibration standards-** A calibration stock standard (500 ug/ml) and working initial calibration verification standard (100 ug/ml) are prepared in the same manner as the calibration standards.

7.2.5 **C40 Marker standard:** This standard is prepared at 100 ppm (100ul of the n-Tetracontane (C40) stock (1000ppm) diluted to 1ml with methylene chloride) This standard is run to determine the C9-C40 integration range when the C9-C40 range is being evaluated. It's not used for quantitation.

8.0 PROCEDURE

8.1 Instrument Set-Up

8.1.1 All daily maintenance, as recommended by the instrument manufacturer, must be performed on the GC before analysis can be run. This must be recorded in the maintenance Logbook. See section 18.0 for maintenance and troubleshooting.

8.1.2 The chromatographic conditions have been optimized using a high resolution capillary column with a slow ramp rate from 50°C to 310°C. The total run time is over 25 minutes. The resulting chromatogram provides extensive chromatographic information covering a wide range of materials including, but not limited to, light and medium fuel oils, heavy oils (such as crude oils), coal tar, and lubricating oils.

MASTER

8.1.3 The column must resolve diesel components and the solvent front from C_9.

8.1.4 Settings

ESS Laboratory. This document may be reproduced solely for internal use.

	Injectors A and B
Injection port temperature	290°C
Detector temperature	300°C
Injection volume	1- 2 ul
Recommended carrier gas H2 :	0.5 to 1.5 ml/min
Air:	400 ml/min
Hydrogen:	35 ml/min

8.2 Instrument Calibration

8.2.1 ESS Laboratory's policy is that the audit trail on the Chemstation/Enviroquant software is always on. This ensures that any changes made to the instrument operating method be documented through the audit trail.

8.2.2 Calibrate the GC with five to seven calibration working standards. The GC System is calibrated using the external standard method.

8.2.3 Prepare Aliphatic Hydrocarbon calibration standards at a minimum of five concentration levels, see 7.2.3.2.

8.2.4 Inject each calibration standard using the technique that will be used to introduce the actual samples into the gas chromatograph (e.g., 1 µl injections).

8.2.5 Tabulate the area responses against the mass of TPH injected. This applies to the individual aliphatic compounds as well as the C_9-C_{36} or C_9-C_{40} ranges. The C_9-C_{36} retention time (Rt) window is defined as 0.2 min before the Rt of n-Nonane (C_9) to 0.5 min after the Rt of n-Hexatriacontane (C_{36}). The C_9-C_{40} retention time (Rt) window is defined as 0.2 min before the Rt of n-Nonane (C_9) to 0.5 min after the Rt of n-Tetracontane (C_{40}). The results are used to prepare a calibration curve for the individual aliphatic compounds, as well as the TPH range. The ratio of the response to the amount injected, defined as the calibration factor (CF), is calculated at each standard concentration using Equation 1. This is accomplished through the EnviroQuant software. ***After generating the initial calibration curve in Enviroquant, the analyst must visually check that each calibration standard was correctly entered into the new calibration method. This is accomplished by checking that the area response for one compound or range from each calibration standard's printout corresponds to the area count listed in the calibration method in Enviroquant.***

MASTER

Equation 1

$$\textbf{Calibration Factor (CF)} = \frac{(A_s)}{(C_s)}$$

Where:

A_s = Area for TPH in the standard (C_9-C_{36} or C_9-C_{40} ranges or individual aliphatic compounds).
C_s = Mass of TPH injected, ng.

8.2.5.1 If the percent relative standard deviation (%RSD) of the calibration factors is equal to or less than 20% for the calibration standards, as determined using Equation 2, linearity through the origin can be assumed. Refer to Tables 1 & 2 in Section 10.4.

8.2.5.2 If the system does not meet this standard, then a linear regression calibration curve may be used. If linear regression is used, then at a minimum, the correlation coefficient, r, must be ≥ 0.99.

8.2.5.3 Any individual standard can be omitted. A minimum of five points are needed to satisfy method requirements. Omission of a point will redefine the calibration range. Dilutions will be made accordingly.

8.2.5.4 If the system does not meet these standards then the calibration data is not acceptable. If the calibration does not pass the system may need to be maintained and a new calibration performed.

Equation 2: **Percent Relative Standard Deviation**

$$\% \text{ RSD} = \frac{\text{Stand Dev of 5 CFs x 100\%}}{\text{Mean of 5 CFs}}$$

8.2.6 **Initial Calibration verification standard (ICV)** – Immediately following generation of an initial calibration a second source standard mid level calibration is run after each initial calibration. The concentration of the individual aliphatic compounds as well as the TPH C_9-C_{36} or C_9-C_{40} ranges in the second source must be within 20 %Difference/Drift of the expected value. Percent Drift is used when linear regression is used for the initial calibration. %Drift is calculated as %recovery of ICV value versus actual concentration. See Section 10 for method-specific exceptions. Percent Difference is calculated as follows:

Equation 3:

$$\textbf{Percent Difference } (\%D) = \frac{R_2 - R_1}{R_1} \times 100\%$$

Where:
$R_1 = \overline{CF}$ from the calibration (average calibration factor)
R_2 = CF from the check standard

MASTER

8.2.7 **Continuing Calibration Verification:** At a minimum, the CF of the $C_9 - C_{36}$ or C_9-C_{40} TPH ranges and individual aliphatic compounds must be verified on each working day prior to sample analysis. It must also be verified after

every 20 samples (10 field samples for DoD) or 12 hours. This is performed by the injection of a mid-level calibration standard to verify instrument performance and linearity. If the percent difference/drift (%D) for the TPH range and individual aliphatic compounds varies from the predicted response by more than ±20%, as calculated using Equation 3. See corrective action in Section 10.0 for CCVs that are outside criterion. **(The CCV concentration, when performing DoD work must be at a minimum two different concentrations throughout the analytical run. One standard must be at or below the mid-range standard.)** ESS Lab alternates between the 50 ppm and 100 ppm standards. Refer to Tables 1 & 2 in Section 10.4.

8.2.8 Record continuing calibration acceptability, when applicable, in the sequence log, attachment A.

8.3 SAMPLE ANALYSIS

8.3.1 Prior to running samples, a midlevel calibration standard must be analyzed to verify the curve (8.2.6). This calibration standard is analyzed under the same conditions as the calibration curve. Once the instrument has a valid continuing calibration, sample analysis may begin.

8.3.2 State of Connecticut ETPH Mass Discrimination protocol requires that the first CCAL standard in a sequence be evaluated for mass discrimination. The response factor from each alkane is compared to the average response factor of all the alkanes in the initial calibration. An individual alkane response factor cannot drift more than 20% from the average; one exceedance is allowed but must be less than 50 %. Any other deviations must be described in the project narrative. The injector system must be kept very clean to meet these criteria. This requirement is applicable only to Connecticut samples.

8.3.3 Mass DEP also requires a mass discrimination check. The ratio of C_{28}/C_{20} must be > 0.85.

8.3.4 **Log Book**: All samples set up on the instrument must be entered into the run logbook (Attachment B) prior to sample analysis. The logbook must be filled out completely with the date, vial number (slot number), computer file number, method number, ESS lab ID, and the initials of the analyst setting up the instrument.

8.3.4.1 Date includes the day, month, and year.

8.3.4.2 Vial number: This field ***must*** be filled in for each entry.

8.3.4.3 Computer file ID is an instrument abbreviation, using a perpetual numbering system beginning at the start of a new year with e.g.G2F0001 and going to the end of the year.

MASTER

8.3.4.4 The ESS Lab ID includes the ID of the standards, samples and all QC samples.

8.3.4.5 Initials are signed by the analyst setting up the instrument.

8.3.4.6 The Comment section is a summary of calibration results, dilution information, and any unusual observations. (Examples would include: carry over information into the sample, retention time shift, calibration standard is less than 20% recovery, sample needs dilution.)

8.3.4.7 The Method section is the method in the chromatographic software used to operate the instrument.

8.3.5 Quality control samples are to be analyzed with their associated batches. It is not acceptable to batch QC samples together. The following is the recommended analytical sequence for an analytical batch.

8.3.5.1 Preparation Blank

8.3.5.2 Blank spike /blank spike duplicate

8.3.5.3 Environmental samples 1 to 20

8.3.5.4 Continuing Calibration verification standard (CCV)

8.3.6 A CCV is analyzed at the beginning, after every 20 samples and/or at the end of the analytical sequence. Also, the CCV must be analyzed every 12 hours. **Note: When analyzing samples for DoD work CCVs must be analyzed after every 10 field samples.** The final CCV must be at a different concentration than the initial CCV; alternate between 100 and 50 ppm.

8.3.7 Quantitative analysis of the total petroleum hydrocarbons in the sample is accomplished by comparing the total area between the retention time of n-C_9 to n-C_{36} (or C_9 to C_{40}) The absolute retention times used to measure this range are determined from the continuing calibration standard analyzed just prior to the samples. This range is integrated with a forced baseline using the GC EnviroQuant Software.

8.3.8 The surrogate peak is also integrated.

8.4 Retention Time Windows:

8.4.1 Total Petroleum Hydrocarbon Ranges: TPH retention time (Rt) windows are defined before the Rt of the beginning marker compound (C_9) and after the Rt of the ending marker compound (C_{36} or C_{40}). The retention time windows are set daily by the Rt of the beginning and ending markers in the initial continuing calibration verification standard (CCV).

UNCONTROLLED

8.5 Baseline Correction Procedure

8.5.1 Because the chromatographic conditions employed for TPH analysis can cause significant column bleed and a resulting rise in the baseline, it is appropriate to perform a subtraction of the column bleed from the area of the TPH chromatogram. In order to accomplish this subtraction, a methylene chloride blank should be analyzed before the first continuing calibration verification. The area of this chromatogram is measured in the same fashion as is used for samples, by projecting a horizontal baseline across the retention time range for TPH. This area is then subtracted from the area measured for the sample and the difference in areas is used to calculate the TPH concentration.

8.5.2 This Baseline Correction Procedure is to be applied at the beginning of each analytical sequence and/or after any instrument maintenance.

9.0 CALCULATIONS

9.1 Calculation – Waters

$$mg/L = \frac{(A)(DF)(Vt)}{(CF_{avg})(Vi)(V)}$$

9.2 Calculation – Soils

$$mg/Kg\ dry\ wt. = \frac{(A)(DF)(Vt)}{(CF_{avg})(Vi)(Wt)(\%\ Solid)}$$

Where:

A = (Total Area)-(Area of Surrogate)
DF = Dilution Factor
Vt = Final Volume of Extract (ul)
Vi = Volume injected (ul)
CF_{avg} = Average of Range Calibration Factor (from Initial Calibration)
V = Volume of sample (ml)
Wt = Wet Weight of Sample
% Solid = % Solid expressed as a decimal

10.0 Quality Assurance/Quality Control Requirements

10.1 Immediately after the initial calibration, a second source standard (ICV) is analyzed. This standard is prepared at the Level 3 concentration. The percent recovery of the second source must be ±20%. If the percent recovery is outside criterion, then corrective action must be taken. Perform instrument maintenance and/or prepare a new second source standard. If the second analysis of the ICV is not within criterion, then a new calibration curve must be generated. ***Sample analysis cannot begin until a valid second source has been analyzed.***

10.2 Accuracy and Precision: All laboratory personnel must demonstrate initial proficiency for each sample preparation method/matrix that he or she performs. All new employees must successfully demonstrate initial proficiency prior to

ESS Laboratory. This document may be reproduced solely for internal use.
MASTER

independently performing analysis on real samples. This must be accomplished by generating data of acceptable accuracy and precision for target analytes in a clean matrix. The initial proficiency results will become part of each employee's training file.

QC Sample Preparation:

Spiking Solution: Four QC samples must be prepared from a spiking solution with the analytes of interest. The spiking solution must be made using standards **prepared independently from those used for calibration.** The QC samples must be prepared at a concentration that would result in data falling within the middle of the calibration curve. In most cases the blank spike or matrix spike solution is used. Prep: The samples are prepared in a clean matrix. In most cases this initial demonstration will simply be a matter of preparing four blank spikes with a batch of samples.

QC Sample Analysis: The four QC samples must be analyzed within the criteria of the method being evaluated. The QC samples must be handled in exactly the same manner as actual samples.

Accuracy Calculation: Accuracy is defined as the closeness of agreement between an observed value and an accepted reference value. Each of the four spiked samples will be calculated for percent recovery. The average of the percent recovery values is the accuracy result.

Precision Calculation: Precision is defined as the agreement of a set of replicate measurements without assumption of knowledge of the true value. Precision is estimated by the relative standard deviation (RSD) of the four QC samples.

$\%RSD = (s / x)\ 100\ \%$

Where:
s = Standard Deviation of a finite number of values. On a scientific calculator use the **σxn-1** key.

$\bar{x}$ = The average of the four QC sample % recoveries.

Reporting Accuracy and Precision: **Report Accuracy and Precision data with the following minimum info:**

Matrix: Prep Method:
Clean-up Method: Analysis Method:
Date Extracted: Date Analyzed:
Sample Prepared by: If Applicable Sample Analyzed by:

Parameter	*% Rec. QC 1*	*% Rec. QC 2*	*% Rec. QC 3*	*% Rec. QC 4*	*Average Recovery*	*Standard Deviation*	*%RSD*

WASTEWATER

ESS Laboratory. This document may be reproduced solely for internal use.

10.2.1 **Interpretation of Results**: The percent recoveries should be between 50-130% and the %RSD should be less than 30%. If any of the accuracy and precision results do not fall within the criteria then re-prep and re-analyze all QC samples only for those analytes that were not within criteria.

10.3 Each day the analysis is performed the initial calibration must be verified. See Tables 1 and 2. Continuing calibration verification (CCV) must be performed at the beginning and end of each analytical sequence; see 8.2.7 for frequency of CCV. The response factors for the calibration should be within 20 percent of the initial calibration. **(The CCV concentration, when performing DoD work must be at different concentrations throughout the analytical run. One standard must be at or below the mid-range standard..)** When a CCV is out of this acceptance window, the laboratory should stop analyses and take the following corrective action:

10.3.1 If criterion is exceeded then remake and re-analyze CCV. If second consecutive CCV is within criteria then calibration is verified, otherwise re-calibrate system and re-analyze any sample analyzed after invalid CCV.

10.3.2 If the second consecutive CCV was outside criterion, then the analyst may choose to demonstrate acceptability of initial calibration by the analysis of two consecutive CCVs at two concentrations. ***Exception: If CCV is exhibiting high bias (concentration is higher than upper limit) then any samples that are non-detect for that analyte may be reported.***

10.3.3 If the above corrective action fails, then a new five point initial calibration must be generated.

10.3.4 When performing analysis for MA MCP or DOD, any analyte/range outside of criteria in the CCV must be noted in the project narrative

10.4 From the beginning CCV, the retention time of the surrogate and the C_9-C_{36} or C_9-C_{40} range markers are determined.

Table 1

TPH (C9-C36) Criteria:						
ICAL:						
Mth	Stds	C9-C36 (or C9-C40) Rng %RSD / Linearity	Aliphatic Cmpd %RSD / Linearity	ICV	Mass Discrim.	RT Window
CT ETPH	Min of 5pts	30% / 0.99	30%/0.99	30%D	After Ical RF<20% w/ 1 <50%	Ical Avg Rt

MASTER

MA TPH	Min of 5pts	25%/0.99	25%/0.99	20%D	C28/C20 >0.85	Ical Avg Rt
DOD	Min of 5pts	20%/0.995	20%/0.995	20%D	Refer to State	Ical Avg Rt
8100M	Min of 5pts	20%/0.99	20%/0.99	20%D	NA	Ical Avg Rt
CCAL:						
Mth	**Stds**	**Mass Discrim.**	**C9-C36 (or C9-C40) Rng CCV**	**Aliphatic Analyte CCV**	**RT Window**	
CT ETPH	Mid Pt	Beginning 12hr Seq RF<20% w/ 1 <50%	30%D End CCV recommended Every 12 hrs or 20 smp.	30%D End CCV recommended Every 12 hrs or 20 smp.	Update from beginning CCV	
MA TPH	Mid Pt	Beginning 12hr Seq C28/C20 > 0.85	25%D End CCV no failures Every 12 hrs or 20 smp.	25%D End CCV 4 failures <40% Every 12 hrs or 20 smp.	Update from beginning CCV	
DOD	Alternate Concentration	Refer to State	20%D End CCV no failures Every 10 smp.	20%D End CCV no failures Every 10 smp.	Update from beginning CCV	
8100M	Mid Pt	NA	20%D End CCV no failures Every 12 hrs or 20 smp.	20%D End CCV 4 failures <40% Every 12 hrs or 20 smp.	Update from beginning CCV	

Table 2

DRO (C10-C28) Criteria:						
ICAL:						
Mth	**Stds**	**C10-C28 Rng %RSD / Linearity**	**Aliphatic Cmpd %RSD/Linearity**	**ICV**	**Resolution**	**RT Window**
8015	Min of 5pts	20%/0.99	20%/0.99	20%D	NA	Ical Avg Rt
ME DRO	Min of 3pts	20%/0.99	20%/0.99	20%D	C17/C18 > 60%	Ical Avg Rt
DOD	Min of 5pts	20%/0.995	20%/0.995	20%D	NA	Ical Avg Rt
CCAL:						
Mth	**Stds**	**Resolution**	**C10-C28 Rng CCV**	**Aliphatic Analyte CCV**	**RT Window**	

MASTER

ESS Laboratory. This document may be reproduced solely for internal use.

8015	Mid Pt	NA	20%D failures End CCV no Every 12 hrs or 20 smp.	20%D End CCV no failures Every 12 hrs or 20 smp.	Update from beginning CCV	
ME DRO	Seq Begin w/ Mid Pt & Res Std End With Mid Pt & LL Commercial Diesel	At end of Seq: C17/C18 > 60%	20%D failures End CCV no Every 20 smp.	20%D End CCV no failures Every 20 smp.	Update from beginning CCV	
DOD	Alternate Mid and Low See State Mth	NA	20%D failures End CCV no Every 10 smp.	20%D End CCV no failures Every 10 smp.	Update from beginning CCV	

10.5 Preparation Blanks

10.5.1 Preparation blanks are used to verify the presence or absence of method contamination. They are prepared from controlled matrices in the same manner to that of the environmental samples.

10.5.2 Preparation blanks should follow the associated environmental samples through all phases of the sample preparation and in the analytical process.

10.5.3 For a preparation blank to be considered valid it must meet the same instrumental criteria as any other sample and the surrogate recovery of the preparation blank must meet the normal recovery criteria.

10.5.4 The preparation blank should not contain any material at a level above ½ the MRL. See section 11.0 for corrective action

10.6 Blank Spike/Blank Spike Duplicate Samples

10.6.1 Blank Spike/Blank Spike Duplicate Samples (BS/BSD) are prepared from a second source standard of aliphatic hydrocarbons. A 50 ppm standard is made by diluting 5 ml of the 1000 ppm standard (supplied by accustandard) to 100ml in methylene chloride. 1.0 ml of this 50 ppm solution is then spiked into a clean matrix to prepare the BS/BSD.

10.6.2 The BS/BSD must follow the associated environmental sample through all phases of the sample preparation and analysis process.

WASTED

10.6.3 The BS/BSD should not contain any other material except for the spiked material at a level above the reporting limit. The BS should meet the spike recovery criteria of 40% - 140% and the % RPD between the BS and BSD must be less than 25%. In the case of the State of Connecticut, ETPH QC criteria are 60-120% for Recovery and ≤ 30% for RPD.

ESS Laboratory. This document may be reproduced solely for internal use.

10.6.4 Surrogate QC recovery criteria are 40-140%, except for State of Connecticut which are 50-150 %.

10.6.5 . See Section 11.0 for corrective action.

10.7 **Matrix Spikes/Matrix Spike duplicate**

10.7.1 MS/MSDs are performed on each matrix where sample is available. The same spike is used as in 10.6.1.

10.7.2 The MS should meet the spike recovery criteria of 40% - 140% and the MS/MSD should have a %RPD of +/- 50%. In the case of the State of Connecticut, ETPH QC criteria are 50-150% for Recovery and ≤ 30% for RPD.

10.7.3 If the MS/MSD is outside of the acceptance criteria then it must be determined if it is a Matrix Effect or Laboratory error. See Section 11.0 for corrective action.

10.8 **Method Detection Limit Study: MDLs** are determined in either reagent water or sodium sulfate and verified annually. MDLs are calculated, reported and verified according to the ESS SOP 110_0013. (Project-specific requirements may require that the MDL study be performed in the site-specific matrix.). Seven MDL samples are extracted and analyzed like any other sample in an analytical batch that contains a method blank. The MDL samples are prepared as follows:

10.8.1 **Soil MDL**: 250 ul of a 2000ug/ml Fuel Oil # 2 solution (1:10 dilution of spiking solution in 10.6.1) is added to 30g (20g for method 3541) of sodium sulfate.

10.8.2 **Aqueous MDL**: 200 ul of a 2000ug/ml Fuel Oil # 2 (1:10 dilution of spiking solution in 10.6.1) solution is added to 1 Liter of Lab DI water.

10.9 **Control charts** are generated in accordance with SOP 110.0014.

11.0 DATA VALIDATION

11.1 Data validation will be accomplished by reviewing all of the quality control parameters and assuring that they are within recommended ranges by completing the Data Review Checklist for GC/FID 8100M. The only exceptions made to ranges would be the following:

11.1.1 For MS/MSD, the RPD should be +/- 50% (≤ 30% for CT). However, there are cases where duplicates may not work. If this is the case, inform client in narrative concerning sample non-homogeneity.

11.1.2 For matrix spikes, the % Recovery should be 40-140% (50-150 % for CT). If the matrix spike is outside this range, check the BS/BSD. If the BS/BSD is within limits, matrix interferences are present and should be noted in the

MASTER

narrative.

11.1.3 Analytical batches with Method blanks above the ½ MRL will be re-prepped and re-analyzed with the following exceptions:

11.1.3.1 Samples that are that are at least twenty times higher than the method blank may be reported.

11.1.3.2 When the method blank is less than 5% of the regulatory limit associated with the analyte the method blank would be acceptable.

11.1.3.3 If the analyte is found in the method blank above the ½ the MRL but is not in any of the associated samples, no corrective action is needed.

11.1.3.4 Any results that are reported with method blank contamination must be B-flagged.

11.1.4 For the BS/BSD, the % Recovery should be 40-140% (60-120 % for CT). If the BS/BSD is outside this criterion, the analytical batch will be re-extracted and re-analyzed with the following exceptions:

11.1.4.1 For BS/BSD >140% (>120% for CT) , samples with results below the MRL may be reported. It has been shown that the results above MRL would have been detected.

11.1.4.2 For BS/BSD < 40% (< 60% for CT), samples with results above a regulatory limit may be reported.

11.1.4.3 In some instances there may be insufficient sample to re-extract. The results may be reported as estimated values when this occurs after contacting the client for instructions.

11.1.4.4 Any samples that are reported with invalid BS/BSD data must have a notation in the case narrative.

11.2 All unusual observations and method deviations will be noted in the narrative accompanying the data report presented to the client.

11.3 A second analyst reviews all data for accuracy. Results of this review are noted on the data validation checklist in the second level review column and in the comment section.

MASTER

12.0 REFERENCES

12.1 SW846 Method 8015B, Nonhalogenated Organics Using GC/FID Third Edition, Update V.

ESS Laboratory. This document may be reproduced solely for internal use.

12.2 SW846 Method 8100, Polynuclear Aromatic Hydrocarbons, Third Edition, Update V.

12.3 Univ. Connecticut, Analysis of Extractable Total petroleum hydrocarbons (ETPH) Using Gas Chromatograph/Flame Ionization Detection, March 1999.

12.4 TNI Standard 2009: Volume 1, Module 2 and Volume 1, Module 4.

12.5 Deleted.

12.6 ISO/IEC Standard 17025:2005(E).

13.0 POLLUTION PREVENTION and WASTE MANAGEMENT

13.1 ESS Laboratory's policies on pollution prevention and waste management are covered in SOP 90_0002, Hazardous Waste Contingency and Emergency Response Plan. All employees are trained in the requirements of the SOP.

14.0 METHOD PERFORMANCE

14.1 Precision and Accuracy data must be generated by all employees before performing this analysis on client samples. The data is generated by analyzing a method blank and four blank spike samples. Acceptance criteria are 40-140% Recovery and %RSD of $\leq$ 25%.

14.2 The precision and accuracy data in Table 1 were developed using this method.

15.0 TABLES, DIAGRAMS, FLOWCHARTS, AND VALIDATION DATA

Table 1. Typical Precision and Accuracy data generated 4/23/05 – 2/14/07

Compound	Prep Method	Spk	Avg	%Rec	%RSD
Total Petroleum Hydrocarbons	3510C	20	13.38	66.9	7.87
Total Petroleum Hydrocarbons	3541	20	11.38	56.9	7.03
Total Petroleum Hydrocarbons	3550B	20	14.3	71.5	6.71

16.0 DEFINITIONS

16.1 **Accuracy**: The closeness of agreement between an observed value and an accepted reference value. When applied to a set of observed values, accuracy will be a combination of a random component and of a common systematic error (or bias) component.

16.2 **Batch**: A group of samples which behave similarly with respect to the sampling or the testing procedures being employed and which are processed as a unit. For QC purposes, if the number of samples in a group is greater than 20, then each group of 20 samples or less will all be handled as a separate batch.

ESS Laboratory. This document may be reproduced solely for internal use.
MASTER

16.3 **Bias**: The deviation due to matrix effects of the measured value (x_s - x_u) from a known spiked amount, where x_s is the spiked sample and x_u is the un-spiked sample. Bias can be assessed by comparing a measured value to an accepted reference value in a sample of known concentration or by determining the recovery of a known amount of contaminant spiked into a sample (matrix spike).

16.4 **Control Sample**: A QC sample introduced into a process to monitor the performance of the system.

16.5 **Equipment Blank**: A sample of analyte-free media which has been used to rinse the sampling equipment. It is collected after completion of decontamination and prior to sampling. This blank is useful in documenting adequate decontamination of sampling equipment.

16.6 **Method Reporting Limit**: The lowest concentration that can be reliably achieved within specified limits of precision and accuracy during routine laboratory operating conditions. The MRL is generally 5 to 10 times the MDL. ESS Laboratory sets the MRL to the lowest non-zero standard in the calibration curve or higher.

16.7 **Field Duplicates**: Independent samples which are collected as close as possible to the same point in space and time. They are two separate samples taken from the same source, stored in separate containers, and analyzed independently. These duplicates are useful in documenting the precision of the sampling process.

16.8 **Blank Spike (BS)**: A known matrix spiked with compound(s) representative of the target analytes. This is used to document laboratory performance.

16.9 **Matrix**: The component or substrate (e.g., surface water, drinking water) which contains the analyte of interest.

16.10 **Matrix Duplicate**: An intra-laboratory split sample which is used to document the precision of a method in a given sample matrix.

16.11 **Matrix Spike**: An aliquot of sample spiked with a known concentration of target analyte(s). The spiking occurs prior to sample preparation and analysis. A matrix spike is used to document the bias of a method in a given sample matrix.

16.12 **Matrix Spike Duplicates**: Intra-laboratory split samples spiked with identical concentrations of target analyte(s). The spiking occurs prior to sample preparation and analysis. They are used to document the precision and bias of a method in a given sample matrix.

16.13 **Method Blank**: An analyte-free matrix to which all reagents are added in the same volumes or proportions as used in sample processing. The method blank should be carried through the complete sample preparation and analytical procedure. The method blank is used to document contamination resulting from the analytical process.

MASTER

16.14 **Method Detection Limit (MDL)**: The minimum concentration of a substance that can be measured and reported with 99% confidence that the analyte concentration is greater than zero and is determined from analysis of a sample in a given matrix type containing the analyte. See SOP 110_0013 for further explanation.

16.15 **Records**: Include all logbooks, papers, machine readable materials, or other documentary materials, regardless of physical form or characteristics.

16.16 **Surrogate**: An organic compound which is similar to the target analyte(s) in chemical composition and behavior in the analytical process, but which is not normally found in environmental samples.

17.0 PERSONNEL QUALIFICATIONS

17.1 Analysts who perform this analysis must have a working knowledge or quantitative and qualitative analysis, instrumental methods of analysis, chemical laboratory methods, and equipment.

17.2 All analysts, before performing any analysis, participate in the ESS Laboratory training program (SOP80_0016). The training process consists of reading the Standard Operating Procedure, gaining instruction on the procedure from an experienced analyst, and performing the initial demonstration of capability.

18.0 TROUBLESHOOTING

18.1 The following procedure is performed when the instrument is initially set up or when a continuing calibration has failed the QC criteria.

18.1.1 Set the GC system to room temperature and turn off oven.

18.1.2 Remove column by unscrewing the column in the injection port.

18.1.3 Remove septum nut and septa. Discard septa.

18.1.4 Remove weldment. This will expose the O-ring and glass liner. Using a set of tweezers, remove O-ring and liner. If O-ring is not distorted then set aside for later use, otherwise, replace O-ring. Remove the glass liner. In a ventilation hood rinse the liner with methylene chloride and scrub with a cotton swab. If the liner is visibly stained, then replace with a new one.

18.1.5 With a cotton swab dipped in methanol, clean the injection port and weldment.

MASTER

18.1.6 Remove the gold seal nut located on the bottom of the injection port. With a cotton swab and methanol, clean the gold seal.

18.1.7 Replace all parts in the following order:

ESS Laboratory. This document may be reproduced solely for internal use.

18.1.7.1 Gold seal nut. Hand tighten and ¼ turn with wrench.

18.1.7.2 Insert clean or new glass liner.

18.1.7.3 Place O-ring over liner. Slide O-ring over and down the liner until it fits snug against the injection port.

18.1.7.4 Replace weldment.

18.1.7.5 Place new green septa into weldment.

18.1.7.6 Replace septum nut. **Only hand tighten!**

18.1.7.7 Slide column nut and a new graphite ferrule over column.

18.1.7.8 Using a ceramic tile, cut 3-6 inches of the column. The cut must be square with no jagged edges.

18.1.7.9 Connect column to injection port by inserting 3 mm of column into the injection port and hand tighten column nut. Next add ¼ turn with a wrench.

18.1.8 Make sure all gases are flowing. (Measure flows with bubble meter.) The flow should be approximately 1 ml/min going through a capillary column (0.25 um ID).

18.1.9 Turn on injection port temperature.

18.1.10 Set oven temperature to 150°C and allow the system to stabilize. Bake out the oven at 300°C for an hour. Reset to 80°C.

18.2 Record all maintenance in the instrument's maintenance logbook.

19.0 Data Management And Records

19.1 **Data Management** - ESS Laboratory's utilizes the Promium Element LIMS system as part of its Data Management system. Client sample information is entered into ELEMENT LIMS and analyses are assigned to each sample. The LIMS allows EPA hold times, minimum batch QC requirements, and QC criteria to be assigned to each analysis. Standards can be entered and assigned to QC samples through the LIMS. Once analysis has been performed, data is imported using DataTool avoiding manual errors. In conjunction with Crystal Reports, the ELEMENT system allows for a wide variety of reporting formats.

MASTER

19.2 **Records** – The specific retention periods required in the NELAC Standards, EPA-CFR and state and local statutes are followed or exceeded. At a minimum, data records are retained for five years from last use (10 years for drinking water). If there is a question about whether a record should be retained or disposed because no

ESS Laboratory. This document may be reproduced solely for internal use.

specific requirement could be found, the record is retained until such time as a retention period is specified. Records are stored in specified-labeled locations and are easily retrievable. All raw data associated with testing is also retained including; computer printouts, chromatograms, review forms, and logbooks.

ATTACHMENTS

Attachment A – GC2 Rear Sequence Log

Attachment B – GC2 Front Sequence Log

Attachment C– Instrument Control Parameters: Representative run

MASTER

ESS Laboratory: This document may be reproduced solely for internal use.

ESS LABORATORY GC2 REAR SEQUENCE LOG

DATE ANALYZED 7/24/2013 Work orders reported: _____ Review

ANALYST ML _____

METHOD TPH2RBK **MATRIX** SOIL **SEQ ID** CWG0297 **CAL ID** _____ (includes a check and review of manual integrations)

AQ CWG0298

FILE ID	VIAL #	SAMPLE ID	BATCH ID	STD ID/COMMENTS	RW	RPT	IMP BY	MATRIX	Comments:
G2R20623	96	DCM							
G2R20624	97	DCM							
G2R20625	100	TPH 100		3G24100					
G2R20626	99	TPH 50		3G24099					
G2R20627	76	CG32409-BLK1	CG32409		3541			S	
G2R20628	77	CG32409-SRM1	CG32409		3541			S	
G2R20629	78	CG32409-SRM2	CG32409		3541			S	
G2R20630	79	CG32214-BLK1	CG32214		3546			S	
G2R20631	80	CG32214-SRM1	CG32214		3546			S	
G2R20632	51	1307423-01	CG32314					S	
G2R20633	52	1307445-03	CG32314					S	
G2R20634	53	1307445-04	CG32314					S	
G2R20635	54	1307429-01	CG32314					S	
G2R20636	98	DCM							
G2R20637	99	TPH 50		3G24099					
G2R20638	100	TPH 100		3G24100					
G2R20639	55	1307458-04	CG32436					S	
G2R20640	56	1307458-04MS	CG32436					S	
G2R20641	57	1307458-04MSD	CG32436					S	
G2R20642	58	1307460-01	CG32436	5X				S	
G2R20643	59	130741-01	CG32436					S	
G2R20644	60	1307462-01	CG32436					S	
G2R20645	98	DCM							
G2R20646	99	TPH 50		3G24099					
G2R20647	100	TPH 100		3G24100					

ESS LABORATORY

ESS LABORATORY GC2 FRONT SEQUENCE LOG

DATE ANALYZED 7/24/2013 Work orders reported: _____ Review

ANALYST ML _____

METHOD TPH2FCK MATRIX SEQ ID CAL ID

SOIL CWG0295

AQ CWG0296

(includes a check and review of manual integrations)

FILE ID	VIAL #	SAMPLE ID	BATCH ID	STD ID/COMMENTS		RW	RPT	IMP BY	MATRIX	Comments:
G2F26444	97	DCM								
G2F26445	98	DCM				TAJ	X			
G2F26446	99	TPH 50		3G24099		TAJ	X			CCV1
G2F26447	100	TPH 100		3G24100						
G2F26448	1	CG32402-BLK1	CG32402			TAJ	X	X	A	
G2F26449	2	CG32402-LLBS	CG32402			TAJ	X	X	A	
G2F26450	3	CG32402-BS1	CG32402			TAJ	X	X	A	
G2F26451	4	CG32402-BSD1	CG32402			TAJ	X	X	A	
G2F26452	76	CG32409-BLK1	CG32409		3541				S	
G2F26453	77	CG32409-SRM1	CG32409		3541				S	
G2F26454	78	CG32409-SRM2	CG32409		3541				S	
G2F26455	79	CG32314-BLK1	CG32314		3546				S	
G2F26456	80	CG32314-SRM1	CG32314		3546				S	
G2F26457	5	1307437-01	CG32402			TAJ	X	X	A	
G2F26458	6	1307437-02	CG32402			TAJ	X	X	A	
G2F26459	7	1307437-03	CG32402			TAJ	X	X	A	
G2F26460	8	1307437-04	CG32402			TAJ	X	X	A	
G2F26461	9	1307393-01	CG32402			TAJ	X	X	A	
G2F26462	98	DCM								
G2F26463	99	TPH 50		3G24099						
G2F26464	100	TPH 100		3G24100		TAJ	X			CCV2
G2F26465	10	CG32436-BLK1	CG32436						S	
G2F26466	11	CG32436-BS1	CG32436						S	
G2F26467	12	CG32436-BSD1	CG32436						S	
G2F26468	13	1307458-01	CG32436						S	
G2F26469	14	1307458-02	CG32436						S	
G2F26470	15	1307458-03	CG32436						S	
G2F26471	98	DCM								
G2F26472	99	TPH 50		3G24099		TAJ	X			CCV3
G2F26473	100	TPH 100		3G24100						

ATTACHMENT C

Method Information For: C:\HPCHEM\1\METHODS\8100SIG1.M

Method Sections To Run:

( ) Save Copy of Method With Data
( ) Pre-Run Cmd/Macro =
(X) Data Acquisition
(X) Data Analysis
( ) Post-Run Cmd/Macro =

Method Comments:
8100m

END OF TOPLEVEL PARAMETERS

INSTRUMENT CONTROL PARAMETERS

Sample Inlet: GC
Injection Source: GC ALS

HP GC Injector

Front Injector:

Sample Washes	2
Sample Pumps	2
Injection Volume	1.0 microliters
Syringe Size	10.0 microliters
On Column	Off
Nanoliter Adapter	Off
PostInj Solvent A Washes	2
PostInj Solvent B Washes	2
Viscosity Delay	2 seconds
Plunger Speed	Fast

Back Injector:
No parameters specified

HP5890 Temperature Parameters

Zone Temperatures:	State	Setpoint
Inlet A:	On	300 C
Inlet B:	On	300 C
Detector A:	On	315 C
Detector B:	On	315 C

MASTER

Oven Parameters:

Oven Equib Time:	0.20 minutes
Oven Max:	320 C
Oven State:	On
Cryo State:	Off
Cryo Blast:	Off
Ambient:	25 C

Oven Program:

Initial Temperature:	80 C
Initial Time:	2.00 minutes

Level	Rate (C/minute)	Final Temperature (C)	Final Time (minutes)
1	20.0	265	0.00
2(A)	30.0	320	12.00
3(B)	0.0	0	0.00

Next Run Time: 25.08 minutes

HP5890 Purge Valve Settings

Inlet Purge	Init Value	On Time	Off Time	Splitless Injection
A	On	0.75	0.00	Yes
B	On	0.75	0.00	Yes

HP5890 Valve and Relay Information

Initial Setpoints:

5890 Valves:

Valve 1: Off Valve 2: Off Valve 3: On Valve 4: On

19405 Valves:

Valve 5: Off Valve 6: Off Valve 7: Off Valve 8: Off

19405 Relays:

Relay 1: Off Relay 2: Off Relay 3: Off Relay 4: Off

HP5890 Detector Information

Detector	Type	State
A	FID	On
B	FID	On

HP5890 Signal Information

Save data for signal 1 only.

Signal	Source	Peak Width	Data Rate	Start Data	Stop Data
	Det A	0.053	5.000	2.20	27.00
	Det B	0.053	5.000	2.50	20.00

MASTER

END OF INSTRUMENT CONTROL PARAMETERS

DATA ANALYSIS PARAMETERS

Method Name: C:\HPCHEM\1\METHODS\8100SIG1.M

Percent Report Settings

Sort By: Signal

Output Destination
    Screen: No
    Printer: Yes
    File: No

Integration Events: AutoIntegrate

Ge ate Report During Run Method: No

Signal Correlation Window: 0.020

Qualitative Report Settings

Peak Location of Unknown: Apex

Library to Search	Minimum Quality
DEMO.L	0

Integration Events: AutoIntegrate

Report Type: Summary

Output Destination
    Screen: No
    Printer: Yes
    File: No

Generate Report During Run Method: No

MASTER

Quantitative Report Settings

250	3500.000	58809718
500	7000.000	111385989

Qualifier Peak Analysis ON
Curve Fit: Avg. RF

END OF DATA ANALYSIS PARAMETERS

MASTER

ESS Laboratory
Division of Thielsch Engineering
Cranston, RI

SOP NO. 60_8270

SEMIVOLATILE ORGANIC COMPOUNDS ANALYSIS BY GAS CHROMATOGRAPHY/ MASS SPECTROMETRY (EPA Method 625/SW-846 METHOD 8270 D)

APPROVED BY:

Operations Manager	Date 1/20/17
QA Manager	Date 1/20/17
Laboratory Director	Date 1/20/17

Master marked in red. Controlled copies marked in green.

MASTER

SEMIVOLATILE ORGANIC COMPOUNDS ANALYSIS BY GAS CHROMATOGRAPHY/MASS SPECTROMETRY (EPA Method 625/SW 846 METHOD 8270 D)

1.0 SCOPE AND APPLICATION

1.1 To determine the concentration of semi-volatile organic compounds in extracts prepared from all types of solid waste matrices, soils, and waters. Parameters which may be measured are as follows:

Analyte	Analyte
1,4-Dichlorobenzene-d4 **IS**	Dimethylphthalate
N-Nitrosodimethylamine	Acenaphthylene
Pyridine	2,6-Dinitrotoluene
2-Fluorophenol **Surr**	2-Nitroaniline
bis(2-Chloroethyl)ether	Acenaphthene
Phenol-d5 **Surr**	2,4-Dinitrophenol
2-Chlorophenol	Dibenzofuran
Phenol	4-Nitrophenol
Aniline	3-Nitroaniline
2-Chlorophenol-d4 **Surr**	2,4-Dinitrotoluene
1,3-Dichlorobenzene	Fluorene
1,4-Dichlorobenzene	2,3,4,6-Tetrachlorophenol
1,2 Dichlorobenzene-d4 **Surr**	Diethylphthalate
1,2-Dichlorobenzene	4-Chloro-phenyl-phenyl ether
Benzyl Alcohol	Phenanthrene-d10 **IS**
bis(2-chloroisopropyl)Ether	4-Nitroaniline
2-Methylphenol	4,6-Dinitro-2-Methylphenol
Acetophenone	N-nitrosodiphenylamine
N-Nitroso-Di-n-Propylamine	Azobenzene
Hexachloroethane	2,4,6-Tribromophenol **Surr**
3+4-Methylphenol	4-Bromophenyl-phenylether
Naphthalene-d8 **IS**	Hexachlorobenzene
Nitrobenzene-d5 **Surr**	Pentachlorophenol
Nitrobenzene	Phenanthrene
Isophorone	Anthracene
2-Nitrophenol	Carbazole
Benzoic Acid	Di-n-butylphthalate
2,4-Dimethylphenol	Fluoranthene
bis(2-Chloroethoxy)methane	Benzidine
2,4-Dichlorophenol	Chrysene-d12 **IS**
1,2,4-Trichlorobenzene	Pyrene
Naphthalene	Terphenyl-d14 **Surr**
4-Chloroaniline	Butylbenzylphthalate
Hexachlorobutadiene	3,3'-Dichlorobenzidine

MASTER

4-Chloro-3-Methylphenol	Benzo(a)anthracene
2-Methylnaphthalene	Chrysene
1-Methylnaphthalene	bis(2-Ethylhexyl)phthalate
Acenaphthene-d10 **IS**	Perylene-d12 **IS**
Hexachlorocyclopentadiene	Di-n-octylphthalate
2,4,6-Trichlorophenol	Benzo(b)fluoranthene
2,4,5-Trichlorophenol	Benzo(k)fluoranthene
2-Fluorobiphenyl **Surr**	Benzo(a)pyrene
1,1'-Biphenyl	Indeno(1,2,3-Cd)Pyrene
2-Chloronaphthalene	Dibenzo(a,h)Anthracene
2,2'-Oxybis(1-chloropropane)	Benzo(g,h,i)perylene
1,2,4,5-Tetrachlorobenzene	Pentachloronitrobenzene
Caprolactam	

IS = Internal standard **Surr** = Surrogate

1.2 This method can be used to quantitate most neutral, acidic and basic organic compounds that are soluble in methylene chloride and capable of being eluted without derivatization as sharp peaks from gas chromatographic fused silica column coated with slightly polar silicone.

1.3 Some compounds may require special treatment when being determined by this method. (See Interference and Potential Problems, section 5.0)

2.0 METHOD SUMMARY

2.1 Prior to using this method, samples are prepared for chromatography using the appropriate preparation and cleanup methods. A measured volume or weight of sample (approximately 1 L for liquids, 2 g to 30 g for solids) is extracted using the appropriate sample extraction technique. Liquid samples are extracted at acidic pH with methylene chloride using a continuous liquid-liquid extraction (SOP 50_3520C). Solid samples are extracted with methylene chloride using either manual or automated Soxhlet extraction (SOP 50_3540B or 50_3541), or Microwave Extraction (SOP 50_3546) methods. A variety of cleanup steps may be applied to the extract, depending on (1) the nature of the co-extracted matrix interferences and (2) the target analytes. After cleanup, the extract is analyzed by injecting a 1-uL sample into a gas chromatograph with a narrow-bore fused silica capillary column and mass spectrometer detector (GC/MS). This method describes the appropriate chromatographic conditions to achieve separation for a qualitative and quantitative GC/MS analysis.

3.0 HEALTH AND SAFETY

3.1 Each employee has been trained and has acknowledged being trained in the safe use and handling of chemicals being used in the laboratory. This training has been performed according to the ESS Training SOP 80_0016 and by the Chemical Hygiene Plan, SOP No. 90_ 001, in conjunction with the Safety orientation.

MASTER

3.2 All sample and material handling should be done in a hood while using proper protective equipment to minimize exposure to liquid or vapor. Minimum personnel protective equipment includes the use of laboratory safety glasses, a lab coat or apron, and protective gloves.

3.3 The MSDS for the concentrated chemicals used in the area are kept on file in a central location that is available for all employees to review.

3.4 Several chemicals used in this procedure are classified as known or suspected carcinogens. Extreme caution should be used in handling all chemicals in this procedure.

4.0 SAMPLE PRESERVATION, CONTAINERS, HANDLING AND STORAGE

4.1 Aqueous samples are collected in 1 Liter amber borosilicate glass jars with Teflon lined caps. The samples are stored in a dark walk-in cooler at 4°C. Two liters should be provided so samples can be re-extracted when necessary. Aqueous samples must be extracted within 7 days from date sampled.

4.2 Soil/sediment samples are collected in 4 – 8 ounce jars with Teflon lined caps. The samples are stored in a dark walk-in cooler at 4°C. Up to thirty grams of sample are required for extraction and ten grams is required to determine the percent solids. One hundred grams should be provided so samples can be re-extracted when necessary. Soil/Sediment samples must be extracted within 14 days of date sampled.

4.3 All extracts are stored in 2 ml Teflon capped vials in the extract storage refrigerator located in the SVOA lab. These extracts are stored at 4°C and must be analyzed within 40 days of date extracted.

5.0 INTERFERENCES AND POTENTIAL PROBLEMS

5.1 Blanks, samples and spikes must be evaluated for interferences. The source of interference should be identified and corrective action should be taken to eliminate the problem.

5.2 Contamination by carry-over can occur whenever high concentration and low concentration samples are sequentially analyzed.

5.3 Contamination by phthalate esters can occur during sample preparation. Common flexible plastics contain varying amounts of phthalate esters that are easily extracted or leached from such materials during laboratory operations. Cross-contamination of clean glassware routinely occurs when plastics are handled. Avoid contact with any plastic materials and check all solvents and reagents for phthalate contamination to minimize interferences from phthalate esters. Exhaustive cleanup of solvents, reagents and glassware may be required to eliminate background phthalate ester contamination.

MASTER

5.4 Benzidine may be subject to oxidative losses during solvent concentration and its chromatographic behavior is poor. Estimated values are reported at 50ug/L for a 1 liter water extraction and 1650ug/Kg for a 30 gram soil extraction.

5.5 Hexachlorocyclopentadiene is subject to thermal decomposition in the inlet of the gas chromatograph, chemical reaction in acetone solution, and photochemical decomposition.

5.6 N-nitrosodiphenylamine decomposes in the gas chromatographic inlet and cannot be separated from diphenylamine.

5.7 Pentachlorophenol, 2,4-dinitrophenol, 4-nitrophenol, benzoic acid, 4,6-dinitro-2-methylphenol, 4-chloro-3-methylphenol, 2-nitroaniline, 3-nitroaniline, 4-chloroaniline, and benzyl alcohol are subject to erratic chromatographic behavior, especially if the GC system is contaminated with high boiling material.

5.8 Since 1,2-Diphenylhydrazine oxidizes to Azobenzene in the GC injection port, it is indistinguishable from Azobenzene on the GC/MS and will be reported as Azobenzene.

6.0 EQUIPMENT/APPARATUS

6.1 Gas Chromatography/Mass Spectrometer system

6.1.1 **Gas Chromatography**: HP 5890 series II with EPC (electronic pressure control)

6.1.2 **Column**: J&W DB-5MS, HP-5MS or RESTEK RXI-5MS (30m X 0.25 mm ID with 25 um film thickness) or equivalent.

6.1.3 **Mass Spectrometer**: HP 5971, HP 5972, HP 5975 or equivalent, capable of scanning from 35-500 amu every 1 second or less, using 70 volts (nominal) electron energy in the EI mode. The MS must be capable of meeting the criteria in Table 2 when 50 ng of DFTPP (Decafluorotriphenylphosphine) is injected.

6.1.4 **GC/MS interface**: Must give an acceptable response at a 50-ng injection and Pass the tuning criteria on Table 2.

6.2 Data System: Data system:

6.2.1 **Computers:** The Semi-Volatiles laboratory has three GC/MS systems analyzing method 625/8270C. SVOA MS1 has an AST computer with a Windows 95 operating system. SVOA MS2 and MS6 have a DELL computer with a Windows NT operating system. SVOA MS4 and MS5 have a MPC computer with Windows XP operating system. All computer systems are networked to a Windows 2012 R2 server, which is the destination for all files.

MASTER

Full/Differential/Incremental - daily backups are incremental, weekly backups are differential, and monthly backups are full. We keep daily backups for 7 days, weekly backups for 7 weeks and monthly backups indefinitely.

6.2.2 **Software:** HP/Agilent Environmental Chemstation and Shimadzu GCMS Solution, Version 2.50 SV3 (MS5) - The software is interfaced to the mass spectrometer detectors and allows the continuous acquisition and storage on machine-readable media of all chromatograms obtained throughout the duration of the instrument program. The software is capable of integrating the abundance in any EICP between specified times.

6.3 10µL, 25µL, 100µL, 500µL, 1000µL **Hamilton syringes**.

6.4 **Volumetric Flasks**: Class A

6.5 **Balance**: Top loading, OHAUS,® Precision Standard

6.6 **Sample vials**: Glass with Teflon-lined crimp tops

7.0 REAGENTS AND STANDARDS

7.1 **Reagents**: Reagent grade or better chemicals shall be used in all tests. If the purity of a reagent is in question, it is analyzed for contamination. If the target analytes concentration is less than the ½ MRL in the method blank, then the reagent is acceptable.

7.1.1 Organic free reagent water. (ESS DI water system)

7.1.2 Methylene Chloride, HPLC pesticide grade.

7.1.3 Acetone, HPLC pesticide grade.

7.2 **Standards**:

7.2.1 All Primary, Stock, and working standard information is tracked in logbooks according to SOP 60_0001 and also in the Promium Element LIMS.

7.2.2 **Primary Standards**: The certificates of analysis in Attachment A detail the individual analytes and concentrations in each of these standard mixes. The primary standards are purchased as certified mixes and stored in a dark refrigerator at 4 ± 2°C. Primary standards, whether opened or unopened, are not used after the manufacturer's expiration date or eighteen months, whichever comes first, without management approval (see SOP 60.0001, Section 8.5.8). The refrigerator is located in the SVOA lab. Standards must not be stored with samples.

MASTER

ESS Laboratory. This document may be reproduced solely for internal use

Standard	Source	Vendor	Catalog No.	Conc. (µg/ml)
8270 Mix #1	Primary	Restek	31850	500-1000
8270 Mix #2	Primary	Restek	31806	1000
8270 Mix #3	Primary	Restek	31825	2000
8270 Mix #4	Primary	Restek	31879	2000
SemiVOA Mix 1	Secondary	Ultra	SVM-8270	1000
SemiVOA Mix 1	Secondary	Ultra	SVM-8271	1000
Custom Standard Mix 3	Secondary	Ultra	CUS-7266	2000
Custom Standard Mix 4	Secondary	Ultra	CUS-7270	2000
Benzidines Mix	Secondary	Ultra	US-105N	2000
Acid Surrogate	-	Restek	31083-510	7500
Base/Neutral Surrogate	-	Restek	31082-510	5000
SV Internal Std Mix	-	Restek	31006	4000

7.2.3 **Primary Calibration Stock Standard** The stock standard is used to prepare the calibration standards. It is stored in a 15 ml Teflon lined cap in a refrigerator at 4°C. The stock standard must be replaced after twelve months, or sooner if comparisons with quality control check samples indicate a problem. If any of the primary standards used to prepare the stock standard have expired the stock standard must be discarded. All of the primary standards used to prepare the stock standard should be taken out of the refrigerator and allowed to come to room temperature prior to use - prepare standard per manufacturer's instructions. Into a 10 ml volumetric flask transfer 2.0 ml each of Mixes 1 & 2 and 1 ml each of Mixes 3 & 4 (7.2.2) together with 267 µL of Acid Surrogate and 400 µL of Base/Neutral surrogate. Volumize to 10.0 ml with Methylene chloride. The volumes of the standards are measured with a 1.0ml Hamilton syringe. This results in a stock solution containing all of the target analytes and surrogates at a concentration of 200 µg/ml. ***Expires in 12 months***.

7.2.4 **Second Source Stock Standard**: The second source stock standard is prepared from the five certified standards from Ultra Scientific (see 7.2.2). 2.0 ml each of Mixes 1 & 2 and 1 ml each of Mixes 3, 4 & 5, & 267 µL of Acid Surrogate and 400 µL of Base/Neutral surrogate is transferred to a 10-ml Class A volumetric and brought to volume with Methylene chloride. The concentration of the SVOA analytes in this solution will be 200 µg/ml. This solution is transferred to a 15-ml vial. The vial is labeled Second Source Semi-VOA Stock Standard with the date prepared, expiration date, concentration, preparer's initials, and the ESS working standard ID number. The standard is stored in the SVOA standard refrigerator. ***Expires in 12 months***.

7.2.5 **Working Standards**:

7.2.5.1 **Tuning Standard**: Ready to use as purchased after transfer to a 1ml vial. Purchased from Supelco, Catalog # 4-7387 at 50 µg/ml or Absolute Standards Cat # 43030.

MASTER

7.2.5.2 **Calibration Standards**: Eight calibration standards are prepared from the Primary stock standard (7.2.3). All standards are diluted to volume with Methylene chloride. Standards are stored at 4°C and prepared every six months, or sooner if standards present a problem. One ml of each calibration level is prepared separately in a 2ml vial. Prior to analysis internal standard is added to each of the calibration levels. Using a 25µL syringe, 10µL of the internal standard from Restek (See 7.2.2) is injected into each of the 1.0 ml calibration standards.

Level No.	Standard ID	Volume of Stock	Final Volume	Analyte Conc.	Internal Std. Conc.
1	STD005	25 µL	1.0 ml	5 µg/ml	40 µg/ml
2	STD010	50 µL	1.0 ml	10 µg/ml	40 µg/ml
3	STD025	125 µL	1.0 ml	25 µg/ml	40 µg/ml
4	STD050	250 µL	1.0 ml	50 µg/ml	40 µg/ml
5	STD080	400 µL	1.0 ml	80 µg/ml	40 µg/ml
6	STD120	600 µL	1.0 ml	120 µg/ml	40 µg/ml
7	STD160	800 µL	1.0 ml	160 µg/ml	40 µg/ml
8	STD200	1000 µL	1.0 ml	200 µg/ml	40 µg/ml

7.2.5.3 **Second Source Working Standard**: 250 µL of the second source stock standard (7.2.4) is measured with a 1000µl syringe and diluted to 1000µL in the syringe with Methylene chloride. The final concentration of the analytes in this solution will be 50µg/ml. The solution is transferred to a 2ml-target vial and capped. Using a 25 µL syringe, 10µL of the internal standard from Restek (7.2.2) is injected into the 1.0 ml second source standard. The target vial is labeled as Second Source STD with the working standard ESS lab ID. This standard expires six months after date prepared, or sooner if standards present a problem.

7.2.5.4 **Semi-volatile Surrogate Solution**: This solution contains all acid and base/neutral surrogates. One ml of this solution is spiked into each blank, BS, BSD, sample, MS and MSD (for extracts with a final volume of 1ml.). 0.5 ml of this solution is spiked into each blank, BS, BSD, sample, MS and MSD (for extracts with a final volume of 0.5 ml). Prepare by obtaining a 5 ml ampoule each of the acid surrogate Base/Neutral surrogate in section 7.2.1. Use a 5 ml Class A pipette to transfer 5 ml of each of the ampoules into a 250 ml volumetric. Dilute the surrogate to the 250 ml mark with Acetone. Cap and mix the solution by inverting the volumetric 3 to 5 times. Transfer the solution into a 250 ml amber glass bottle. The bottle is labeled with the working standard ID, name of the solution, concentration, preparer's initials, and expiration date. The expiration date is either the expiration date of the primary standard or six months from date prepared whichever comes first. Before this solution can be used, the concentration of the target

MASTER

analytes must be verified. The laboratory will analyze 1.0 ml of this solution like a sample. The result must fall within 15% of the true value.

7.2.5.5 **Semi-volatile Spike Solution**: 5.0 ml each of Mixes 1 & 2 and 2.5 ml each of Mixes 3, 4 & 5 are added to a 50 ml volumetric flask **(section 7.2.2)**. The solution is brought to volume with Acetone. Before the organic prep laboratory can use the spike, the spiking solution is analyzed by taking 1 ml and adding 10 µL internal standard. The percent recoveries are then calculated. If the recoveries are between 80% and 120%, then the lab can use the spiking solution. If not, then a new batch of standard should be used to prepare more of the spiking solution.

8.0 PROCEDURE

8.1 ESS Laboratory's policy is that the audit trail on the Chemstation/Enviroquant software is always on. This ensures that any changes made to the instrument operating method be documented through the audit trail.

8.2 Sample Preparation: Samples must be prepared by one of the following methods:

Matrix	Method	Matrix Summary
Water	3510C	Separatory Funnel (PAH only)
Water	3520C	Liquid-Liquid Extraction
Soil	3540	Manual Soxhlet Extraction
Soil	3541	Automated Soxhlet Extraction
Soil	3546	Microwave Extraction

8.3 **Instrument Setup**:

8.3.1 **GC/MS operating conditions**: A detailed description of the instrument operating parameters is in the Enviroquant GC/MS method in Attachment B.

Mass Range	35-500 amu
Scan time	< 1 sec/scan
Initial Temp	40, hold for 2 min
Temp program 1	40-130 at 35/min
Final Temp 1	130, hold for 0.00 min
Temp program 2	130-300 at 12/min
Final temp 2	300, hold for 13 min or until Benzo[g,h,i]perylene elutes
Inj Temp	250 - 275
Transfer line temp	300
Source temp	Manufacturer's specs
Injector	HP EPP (Pulsed pressure program)
Sample volume	1 µl
Carrier Gas	Helium at 1.5 ml/min

MASTER

8.3.2 **Mass Spectrometer Evaluation**: Prior to placing an MS into service and after major maintenance, its performance must be evaluated.

8.3.2.1 **Auto Tune**: The instrument is first tuned using the standard Spectra Auto tune from the top menu. See Chapter 3 – "To Interpret the Tune Report" in HP G1034C MS ChemStation User's Guide. This report is printed and placed in the maintenance run log.

8.3.2.2 **Instrument Tune** using HP Software: From the top menu, "Tune MS"⇒"Target Tune"⇒"Tune"⇒"DFTPP Tune". This tunes the MS to preprogrammed targets: Mass 131 32%, Mass 219 32%, and Mass 50 2% with a target peak width of 0.45 amu. The resulting spectra should be close to this target.

8.3.2.3 "Tune Ms" ⇒ "Manual Tune" ⇒ "Load DFTPP.U" ⇒ "Adjparam" can also be used to set the target ions. Check for Air Mass: 28 (Nitrogen), 32 (Oxygen), 18 (Water), and 44 (Carbon Dioxide). All should be less than 10% of the Base 69 Ion. The 218 Ion should be between 30-35% and the 502 Ion should be between 1-2%.

8.3.2.4 Analyst judgment, per instrument history, determines if MS is functioning correctly. Compare prior results to current operating conditions to evaluate the performance of the MS. If the electron multiplier voltage needs to be increased drastically then the mass spec probably needs to be cleaned.

8.4 **Loading the instrument**: All standards and samples are analyzed in 2 ml target vials designed to fit the HP auto-sampler. The target vials are labeled with the ID of the standard or sample using a fine point marker. The tray on the auto-sampler is numbered 1-99. The instrument is set up with one injection system. The Tune and subsequent standards are placed in slots 1-9. This is the standard setup for the calibration standards. Vials can be placed in different slots as long as the slot number is written in the logbook.

Tray # 2	DFTPP Tune Standard
Tray # 3	SVOA Standard Level-1
Tray # 4	SVOA Standard Level-2
Tray # 5	SVOA Standard Level-3
Tray # 6	SVOA Standard Level-4
Tray # 7	SVOA Standard Level-5
Tray # 8	SVOA Standard Level-6
Tray # 9	SVOA Standard Level-7
Tray # 10	SVOA Standard Level-8
Tray # 11	SVOA Second Source Standard Level –4

ESS Laboratory. This document may be reproduced solely for internal use
MASTER

8.5 **Log Book**: All samples set up on the instrument must be entered into the run logbook. All logbook entries are performed prior to sample analysis. The logbook must be filled out completely as follows: (See Appendix D).

8.5.1 **Date**: include the day, month, and year of analysis.

8.5.2 Vial number: This is a required field.

8.5.3 **Computer file ID**: GC/MS Data is stored in a network directory (Q drive). Data is stored in the appropriate instrument directory (Q:\\Logbooks\SVOA\MS2 Year-month (2014-06). Each day a batch is set up, a new sub-directory (Date tab-062514) is created. Within this directory, data is stored in the following format: A file is created for each sample. The ID of each sample file has an instrument number followed by a sequential number.

Ex.: SV549318

Where: SV5 is SVOA GC/MS5 and 49318 is the 49318th file.

8.5.4 **ESS Lab ID:** includes the ID of the standards, samples and all QC samples.

8.5.5 **Analyst's initials**

8.5.6 **Comments**: used for calibration standard IDs, dilution information, and any unusual observations.

8.5.7 **Method 8270/625**: The method in the chromatographic software used to operate and calibrate the instrument. For the 8270 analysis a method could have the ID SV5A, where: "SV" stands for Semi-Volatile, "5" is the instrument number, and A is a sequential letter sequence. A copy of a method is in Appendix C.

8.5.8 **Element** Sequence ID and Calibration ID, for soil and water sequences.

8.5.9 RW: Column to indicate samples which have been reviewed.

8.5.10 RPT: Column to indicate runs to be reported.

8.5.11 Imp By: Column to indicate data has been imported into the LIMs system.

8.6 **Initial Calibration**:

8.6.1 A tune check is performed by analyzing a 50ng injection of DFTPP solution described in section 7.2.5.1. The mass spectra of DFTPP ***must*** meet the criteria in Table 2 prior to standard or sample analysis. Analysis does not begin until all criteria are met. A background subtraction is done when needed to eliminate column bleed or background ions. Do not subtract part of the DFTPP peak.

ESS Laboratory. This document may be reproduced solely for internal use
MASTER

8.6.2 The GC/MS tuning standard is also used to assess GC column performance and injection port inertness. Degradation of DDT to DDE and DDD should not exceed 20%. The area count of each of these three analytes is measured. The % Breakdown is calculated as follows:

$$\% \text{ DDT Breakdown} = \frac{\text{Area DDE + Area DDD}}{\text{Area DDT + Area DDE + Area DDD}} \times 100\%$$

8.6.2.1 Benzidine and Pentachlorophenol are also present in the DFTPP mix. There should be no visible peak tailing for either of these compounds. Peak tailing is calculated with the following formula. The tailing factors for pentachlorophenol and benzidine should not be greater than 2.

Tailing = BC/AB

Peak Height = DE
10% Peak Height = BD
Peak Width at 10% Peak Height = AC
Apex = E

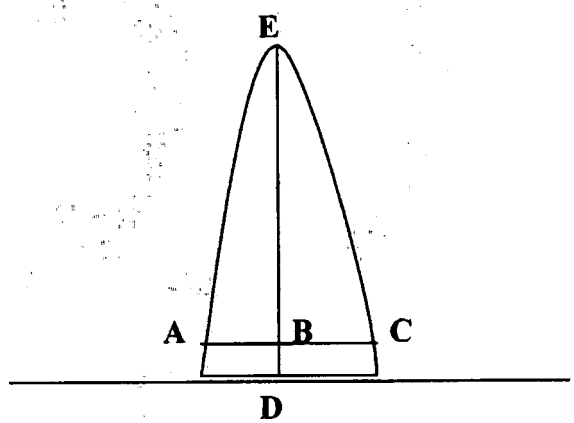

8.6.2.2 If degradation is excessive and/or poor chromatography is noted, the injection port may require cleaning. See daily instrument maintenance. The results of the tune are checked and recorded.

8.6.2.3 If the criteria, set in section 8.6.2.1-8.6.2.2, are not all met, a notation must be made on the data review checklist.

8.6.2.4 All subsequent standards, blanks, samples and spikes associated with the DFTPP analysis must use the same mass spectrometer conditions. The 12 hour tune time starts with the injection time of the DFTPP solution.

8.6.3 10 µL of internal standard solution in section 7.2.1 is spiked into each 1 ml of the calibration standards. In most cases, the base peak ion of each internal standard is used as the primary ion for quantitation. The specific ions used for

ESS Laboratory. This document may be reproduced solely for internal use
MASTER

quantitation of each analyte are listed in the GC EnviroQuant method, (Attachment B). If interferences are present then the next most intense ion is used (For 1,4-Dichlorobenzene-d4 m/z 152 is used for quantitation.) The internal standard solution ID must be entered into the run log page for that run.

8.6.4 After the tune has passed, 1 µL each of the calibration standards is injected and analyzed. Response factors are then calculated for each compound as follows:

$RF = (AxCis)/(AisCx)$

Where:

Ax = Area of the primary ion for the compound being quantitated
Ais = Area of primary ion for the internal standard
Cis = Concentration of the internal standard (ng/µl)
Cx = Concentration of compound being measured (ng/µl)

8.6.5 The average Response Factor as well as the percent relative standard deviation (%RSD = [SD/RF] x 100) is calculated for each compound. The %RSD should be $\leq$ 20% for each compound. If this criterion is met, then the relative response factor is considered constant over the calibration range, and the average relative response factor may be used for quantitation. If the %RSD of any compound is greater than 20%, construct calibration curves of area ratio (A/Ais) versus concentration ratio using first or higher order regression fit of the five calibration points. A minimum of five consecutive points are needed for average response or linear regression. A minimum of six consecutive points are needed for quadratic regression. The analyst should select the regression order that introduces the least calibration error into the quantitation.

8.6.5.1 If more than 10% of the compounds in the initial calibration exceed an RSD of 20% and fail the minimum COD for linear or quadratic regression, clean or replace the injector liner and/or column, then re-calibrate. For each of the calibration compounds the relative retention times should not shift more than 0.06 relative retention time units from the mid-level calibration standard. *Note: For linear and quadratic regression curve, a minimum coefficient of determination of 0.99 is required. The Enviroquant software does not show the COD (R^2) for quadratic analysis. The analyst must enter the calibration into ELEMENT to check the COD on quadratic curves.*

8.6.5.2 A minimum response factor for the most common analytes (see Table 6 for SW846-8270D; MADEP-CAM requires RF≥0.05) should be demonstrated for each calibration level. Some compounds may fail these criteria. *If critical project compounds fail the minimum RF criteria, then corrective action must be taken. Possible problems include standard mixture degradation, injection port inlet contamination, contamination*

MASTER

at front end of column, and active sites within the chromatographic system.

NOTE: After generating the initial calibration curve in Enviroquant, the analyst must visually check that each calibration standard was entered into the new calibration method. This is accomplished by checking that the area response for one compound or range from each calibration standard's printout corresponds to the area count listed in the calibration method in Enviroquant

8.6.6 After the Initial calibration has been generated, the analyst must create a copy of the Standard 2 file and quantitate the standard with the new calibration. Review of the analyte recoveries in the standard will demonstrate the appropriateness of the calibration curve.

8.6.7 The RRT's are established from the 50ppm mid point standard in the initial calibration.

8.6.8 A second source standard is run after the initial calibration to verify the primary standards. The second source should be between 70-130% of the expected concentration, see Section 10.0 for extended criteria.

8.7 **Daily GC/MS Calibration**: (Continuing Calibration)

8.7.1 Prior to sample analysis a GC/MS tuning standard must be analyzed. A 50 ng injection of DFTPP must meet the same criteria in Section 8.6.1. This criteria must be met each 12 hour shift. See Table 2. The ID and injection time for the tune standard must be entered into the comment section of the instrument log.

8.7.2 A calibration standard at a mid-calibration range is run immediately after the DFTPP (SSTD050 at 50 ng/µl). The ID for the SSTD050 Standard must be entered into the comment section of the instrument run log. The standard is run each 12 hour shift immediately after the tuning standard. The response factor data is then compared with the average response factor data from the initial calibration. The following formula is used to calculate the percent difference:

$$\% \text{ Difference} = \frac{\overline{RF} - RF}{RF} \times 100\%$$

Where:

$\overline{RF}$ = Average Response factor from the initial calibration.
RF = Response factor from current check standard.

8.7.2.1 Alternatively, if the initial calibration for an analyte consists of a first or higher order curve, the following equations is used to calculate the % drift:

MASTER

$$\%Drift = \frac{50 - Cx}{50} \times 100$$

Where: Cx = Concentration in ng/ul of the analyte

The % Difference/Drift ***must*** be less than 20% for the initial calibration to be assumed valid and the minimum RF must be achieved. If these criteria are not met for for more than 20% of the compounds included in the ICAL, corrective action must be taken prior to analysis of samplesIn cases where compounds fail, they may still be reported as non-detects if it can be demonstrated that there was adequate sensitivity to detect the compound at the applicable quantitation limit. When the failed compound is present, the concentrations must be reported as estimated values.

8.7.3 The internal standard responses and retention times are evaluated in the calibration check. If the retention times shift more than 0.5 minutes from the mid-point calibration standard in the most recent initial calibration, then the GC/MS system must be inspected for possible malfunctions. Also, if the internal standard area shifts more than a factor of two (50 to 200%) from the mid-point calibration standard in the most recent initial calibration, then the GC/MS must be inspected and appropriate corrections made. This usually involves instrument maintenance.

8.7.4 The relative retention times of each compound in each calibration run should agree within 0.06 relative retention time (RRT) units. The RRTs in the continuing calibration standard is compared to the RRTs from the 50ppm standard in the ICAL.

8.7.5 A method blank should be run after the mid-range standard, or at some point in the analytical run to ensure the analytical system is free from contamination.

8.8 **Sample Analysis**:

NOTE: It is not acceptable practice to group QC samples together and/or to analyze QC samples on one instrument and their associated samples on another instrument. Analyst must try to analyze batch QC samples, as capacity allows, along with their associated field samples.

8.8.1 Just prior to sample analysis 10µL of internal standard is spiked into each 1.0 ml of sample extract. The samples are analyzed under the same conditions as the initial calibration standards. The internal standard identification must be recorded in the run log.

8.8.2 Samples must be analyzed within the 12-hour tune time, which begins at the injection time of the tune standard. Any other analysis run after the 12-hour tune time, i.e., 625, Siloxanes and Pesticides must be identified as such.

MASTER

8.8.3 Sample dilution is made when the response of any quantitation ion exceeds the initial calibration curve. Additional internal standard is always added to the diluted extract to maintain the required 40 ng/µL concentration of each internal standard. Dilutions are also made when samples will not inject into the instrument due to their viscosity.

8.9 **Qualitative analysis**:

8.9.1 **Target Compound List**: An analyte is identified by comparison of the sample mass spectrum with the mass spectrum of a standard of the suspected compound. The standard mass spectra are obtained from the SSTD050 (Level 3) of the initial calibration. Two criteria must be satisfied to verify identification:

8.9.1.1 The sample component must elute at the same relative retention time as the standard component. It must elute within ±0.06 RRT units of the RRT of the standard. The RRT of the sample component is compared to the RRT from the 50ppm std in the ICAL.

8.9.1.2 The sample and standard mass spectra should correspond. All ions greater than 10% in the standard mass spectrum must be present in the sample mass spectrum. The relative intensities of the characteristic ions agree within 30% of the relative intensities of these ions in the reference spectrum. (Ex. An ion with a relative ratio of 50% in the standard must be between 20 and 80% in the sample.)

8.9.2 **Tentatively Identified Compounds**: For samples containing components not associated with the calibration standard, a library search can be made for tentative identification. Guidelines for tentative identification are as follows:

8.9.2.1 Relative intensities of all major ions greater than 10% should be present in the sample spectrum.

8.9.2.2 The relative intensity of major ions should agree within plus or minus 20%. (Ex. An ion with a relative ratio of 50% in the standard must be between 30 and 70% in the sample.)

8.9.2.3 Molecular ions present in the reference spectra should also be in the sample spectrum.

8.9.2.4 Ions not present in the reference spectra should be reviewed for possible background contamination. Background subtractions should be attempted to account for this.

9.0 CALCULATIONS (DATA INTERPRETATION)

MASTER

9.1 **Quantitative analysis**: When a compound is identified the quantitation of that compound is based on the integrated abundance of the primary ion. Quantitation is done with an internal standard. The internal standard used is the one nearest the retention time of the compound of interest.

9.1.1 **Water quantitation**:

$$\text{Concentration (ug/L)} = \frac{(Ax)(Is)(Vt)(Dil)}{(Ais)(RF_{avg})(Vo)Vi}$$

Where:

Ax	=	Area of primary ion for compound being measured
Is	=	Amount of internal standard injected (ng)
Vt	=	Volume of total extract (µL)
Ais	=	Area of primary ion of internal standard
RF_{avg}	=	Response factor of compound being measured
Vo	=	Volume of water extracted (ml)
Vi	=	Volume of extract injected (µL)
Dil	=	Dilution factor

9.1.2 **Sediment/ Soil Sludge (on dry weight basis) and waste (on wet weight basis):**

$$\text{Concentration (µg/Kg)} = \frac{(Ax)(Is)(Vt)(Dil)}{(Ais)(RF_{avg})(Vi)(Ws)(D)}$$

Where:

Ax, Is, Vt, Dil, Ais, RF_{avg}, and Vi are the same as in 9.1.1
Ws = Weight of sample extracted (grams)
D = % dry weight of sample. (1 for wet weight basis)

9.1.3 **Quantitation of Tentatively Identified Compounds**: Quantitation of a TIC is done assuming a response factor of one. The formulas above are used with the following modifications:

Ax = Area of the total ion chromatogram for compound being measured
Ais = Area of the total ion chromatogram for the internal standard

10.0 QUALITY ASSURANCE/QUALITY CONTROL

10.1 The laboratory operates a quality control program to demonstrate the laboratory's capability and, with an ongoing analysis of spiked samples, to document the quality of the data generated. The ongoing data quality checks are compared with established performance criteria to determine if the result of the analysis meets the performance criteria of the method.

10.2 **Accuracy and Precision** All laboratory personnel must demonstrate initial proficiency for each sample preparation method/matrix that he or she performs. All new employees

MASTER

must successfully demonstrate initial proficiency prior to independently performing analysis on real samples. This must be accomplished by generating data of acceptable accuracy and precision for target analytes in a clean matrix. The initial proficiency results will become part of each employee's training file.

QC Sample Preparation:
Spiking Solution: Four QC samples must be prepared from a spiking solution with the analytes of interest. The spiking solution should be made using standards **prepared independently from those used for calibration.** The samples must be prepared at a concentration that would result in data falling within the middle of the calibration curve, 50 µg/L. In most cases the blank spike or matrix spike solution is used. Prep: The samples are prepared in a clean matrix. In most cases this initial demonstration will simply be a matter of preparing four blank spikes with a batch of samples.

Sample Analysis:
The four QC samples must be analyzed within the criteria of the method being evaluated. The QC samples must be handled in exactly the same manner as actual samples.

Accuracy Calculation:
Accuracy is defined as the closeness of agreement between an observed value and an accepted reference value. Each of the four spiked samples will be calculated for percent recovery. The average of the percent recovery values is the accuracy result.

Precision Calculation:
Precision is defined as the agreement of a set of replicate measurements without assumption of knowledge of the true value. Precision is estimated by the relative standard deviation (RSD) of the four QC samples.

$$\%RSD = (s / \bar{x})\ 100\ \%$$

Where:

s = Standard Deviation of a finite number of values. On a scientific calculator use the **σxn-1** key.

$\bar{x}$ = The average of the four QC sample % recoveries.

Reporting Accuracy and Precision Accuracy and Precision data should be presented with the following minimum info:

Matrix:	Prep Method:
Clean-up Method:	Analysis Method:
Date Extracted:	Date Analyzed:
Sample Prepared by: If Applicable	Sample Fractionated by: If Applicable
Sample Analyzed by:	Accuracy:
Precision:	

MASTER

Parameter	*% Rec. QC 1*	*% Rec. QC 2*	*% Rec. QC 3*	*% Rec. QC 4*	*Average Recovery*	*Standard Deviation*	*%RSD*

Interpretation of Results:
The acceptance range for Accuracy is 45-135% with <30% RSD, 4 sporadic marginal exceedances are allowed. If any of the accuracy and precision results do not fall within the criteria then re-prep and reanalyze all QC samples only for those analytes outside criteria.

10.3 Method blanks are run with each batch to demonstrate that interferences from the analytical system, glassware, and reagents are under control. The blanks are carried through all stages of sample preparation. All target analytes should be less than ½ the MRL for the blank. See section 11.0 for corrective action for out of criteria results.

10.4 Perform DFTPP tune every 12 hours. Tuning acceptance criteria are presented in Table 2. The computer software will evaluate the tune information. The analyst should be aware of the process used. The tune *must* meet these criteria before sample analysis begins.

10.5 Run an initial calibration curve, using the primary source standards, each time major instrument maintenance occurs or if the CCV does not meet acceptance criteria. Acceptance criteria are presented in Section 8.6.

10.6 Run initial calibration verification (ICV) standard using secondary standards (7.2.5.3) following the initial calibration curve. Acceptance criteria are listed in Section 8.6.6. If the ICV does not meet criteria, re-analyze. If the second consecutive ICV does not meet criteria, then perform system maintenance and re-calibrate the system. The laboratory is allowed up to 5 sporadic marginal exceedances with the expanded criteria of 50-150%.

10.7 Run mid-point Continuing Calibration Verification (CCV) at 50 µg/L using the primary source standards on a daily basis before sample analysis. Also run a CCV every 12 hours during an analytical sequence. Acceptance criteria are listed in Section 8.7. See section 11.0 for corrective action for out of criteria results.

10.8 A blank spike and blank spike duplicate must be prepared and analyzed with each batch of samples. BS/BSDs are prepared using the second source standard and contain all target analytes. Control limits are 40-140% for the base/neutral compounds and 30-130% for the acid compounds. The BS/BSD should have a %RPD of ≤ 20% for waters and ≤ 30% for soils. If > 20% of all compounds fail or if >15% of any one category fails then re-extraction of the batch is necessary. Otherwise, note exceptions in the project narrative.

10.8.1 Control charts will be maintained for the BS/BSD for a representative subset of target analytes and surrogate spikes. Annually, control limits will be determined for all target analytes and surrogates for comparison to default limits.

MASTER

10.9 On an ongoing basis the laboratory analyzes matrix spikes and matrix spike duplicates from each batch of 20 samples. Matrix spike control limits are derived from BS/BSD samples, see section 10.8. For samples outside control limits, see Section 11.0 for corrective action.

10.10 Surrogates are added to all samples and QC samples. If the surrogate recoveries for customer or QC samples are outside control limits, see Section 11.0 for corrective action.

Matrix	B/N Analytes	Acid Analytes
Soil	30-130%	30-130%
Water	30-130%	15-110%

10.11 The relative retention times (RRTs) need to be checked for each identified compound in samples, and compared to standard RRT. Acceptance criteria are presented in Section 11.0.

10.12 Internal standard area counts for standards and samples must meet specifications as described in Section 11.10.

10.13 Data shall be checked to ascertain if it conforms to accepted practices. All sample analytical results used for final data reporting must be between the low standard and the high standard. Results, which fall below the low standard or above the high standard, are to be reported as estimated values. Corrective actions are described in Section 11.0.

10.14 MDLs are determined in reagent water or organic-free sand/sodium sulfate and verified thereafter by an annual MDL check (aka LOD Verification). See SOP 110_0013 for MDL/LOD/LOQ requirements. (Project-specific requirements may require that the MDL study be performed in the site-specific matrix.).

10.15 All manual integrations must be saved to PDF, when made, for verification. Refer to manual integration policy in SOP 110_0016.

10.16 Due to the toxic nature of many SVOCs and the low cleanup standards, integrations of every compound in every sample and method blank should be evaluated in the QEdit mode to ensure that there were no peaks missed during the integration and quantitation of samples.

11.0 DATA VALIDATION

11.1 Ensure that the DFTPP tune was run at the beginning of each 12-hour sequence for each batch of samples analyzed. The acceptance criteria are listed in Table 2.

11.1.1 If the DFTPP acceptance criteria are not met, perform any or all of the following corrective actions:

Re-inject DFTPP.

MASTER

Retune with PFTBA, and then re-inject DFTPP.
Clean MS source, retune with PFTBA, and re-inject DFTPP.

11.1.2 If the tuning criteria still cannot be met after performing the above, have the mass spectrometer serviced by manufacturer representative.

11.2 After an initial calibration curve is analyzed, ensure that the following criteria were met.

11.2.1 If the %RSD of any method target analyte is 20% or less, then the relative response factor is assumed to be constant over the calibration range, and the average relative response factor may be used for quantitation.

11.2.2 If the %RSD of any method target analyte is greater than 20%, calibration curves must be constructed using first or higher order regression fits. A minimum of 5 points must be used for linear regression and six points must be used for Quadratic Regression. The corresponding coefficient of determination (R^2) must be 0.99 or greater.

11.2.3 Minimum response factor criteria must be met per Table 6.

11.2.4 For the remaining compounds if greater than 20% of the compounds (15 for full list) have %RSD > 30, then recalibration is required.

11.2.5 If the acceptance criteria are not met, then the following corrective actions should be performed: (1) adjust the instrument and/or perform instrument maintenance; or (2) narrow the calibration range using six standards at different concentrations. The low end of the calibration curves must be carefully watched.

11.3 After an initial calibration (minimum of 5 point for average RF or linear regression, minimum of 6 points for quadratic regression) is performed, analyze initial calibration verification (ICV) standard. The percent difference must be within ±30% for all target analytes with allowance for ***sporadic marginal exceedances.*** Sporadic marginal exceedances have the expanded criterion of 40-160% drift. If criteria are not met, reanalyze the ICV or prepare a new calibration curve as necessary.

11.4 After the continuing calibration verification (CCV) standard is analyzed, ensure it was run at the required frequency (every 12 hours or initially before daily analysis). In addition, the following acceptance criteria must be met.

11.4.1 Check response factors. If the minimum response factors are not met, the system must be evaluated, and corrective action must be taken before sample analysis begins.

11.4.2 All target compounds are evaluated to check the validity of the initial calibration with a limit of ≤20% drift or difference (allow up to 20% of compounds <40%D or up to 15% in each category).

MASTER

11.4.2.1 If these criteria are exceeded, corrective action is necessary. If corrective action fails to produce consecutive (immediate) calibration verification within acceptance criteria, then the analyst may perform maintenance to try to troubleshoot the instrument. After maintenance, the analyst must analyze two consecutive CCV at two concentration (one at or below mid-range) to demonstrate that corrective action was successful. If not, then a new initial calibration must be generated. These criteria must be met before sample analysis begins and re-analysis of samples up to the last acceptable CCV standard must occur with the following exceptions:

- When the acceptance criteria is exceeded high, high bias, then all samples that are non-detects may be reported.

- When the acceptance criteria for the CCV are exceeded low, low bias, sample results that exceed a maximum regulatory limit may be reported.

11.4.3 When performing analysis for MA MCP, any analyte outside of criteria in the CCV must be noted in the project narrative

11.5 Assess the method blank. The analyst must confirm that the method blank was analyzed at the required frequency and all target analytes are below ½ the MRL. Analytical batches with Method blanks outside acceptance criteria will be re-prepped and re-analyzed (where sample volume permits) with the following exceptions:

11.5.1 Samples that are at least ten times higher than the method blank may be reported, except for common lab contaminants, which must be less than five times the MRL.

11.5.2 When the method blank is less than 5% of the regulatory limit associated with the analyte the method blank would be acceptable.

11.5.3 If the analyte is found in the method blank above ½ the MRL, but is not in any of the associated samples, no corrective action is needed.

11.5.4 Any results that are reported with method blank contamination must be B-flagged.

11.6 Assess that the matrix spike/matrix spike duplicates were analyzed at the required frequency. Acceptance criteria are listed in 10.9. If criteria are not met, perform the following corrective actions as appropriate.

11.6.1 If both BS/BSD and MS/MSD recoveries are unacceptable, then the entire batch of field and QC samples must be reanalyzed.

MASTER

11.6.2 If the MS/MSD is unacceptable, but the BS/BSD is acceptable, then a potential matrix effect has been identified. Reasonable attempts must be made to address matrix interference. The client must be notified in the case narrative of the matrix problem.

11.7 Assess the surrogate recoveries for all samples, blanks, BS/BSD, MS, and MSD. The following acceptance criteria apply to surrogate recoveries.

11.7.1 The surrogate recoveries for all QC samples must be within control limits. If the BS/BSD and/or method blank recoveries are outside limits, re-analysis must be performed for verification. If still outside limits, then corrective action is to re-extract the batch.

11.7.2 If sample surrogate recoveries are outside control limits (10.10), the sample should be re-analyzed. If the results are still outside the limits, then re-prep and re-analyze the sample(s). An exception to this criterion is surrogates diluted out of sample due to matrix problems. In addition, if an obvious interference is present, the laboratory does not have to re-extract the sample but must provide the chromatogram with the project. *ESS Laboratory's policy allows for one acid and one base surrogate to be outside control limits before re-prepping sample batches. If any surrogate is<10%, then sample must be re-prepped.*

11.8 The relative retention times must be checked for all identified compounds in both standards and samples. The internal standard absolute retention times must also be checked for all analyses. Acceptance criteria are as follows:

11.8.1 The relative retention times of each compound in each calibration and sample run should agree within 0.06 relative retention time (RRT) units. Late-eluting compounds usually have much better agreement.

11.8.2 Internal standard retention time:

11.8.2.1 If the retention time for any CCV internal standard changes by more than 30 seconds from the **mid-point standard of the initial calibration**, the chromatographic system must be inspected for malfunctions and corrections must be made, as required.

11.8.3 If the retention time for any sample internal standard changes by more than 30 seconds from the daily calibration, the chromatographic system must be inspected for malfunctions and corrections must be made, as required.

11.9 The analyst must verify that ion abundance meets specific criterion for the various analyses. The following acceptance criteria shall be checked for all appropriate samples.

11.9.1 All ions present in the standard mass spectrum at a relative intensity greater than 10% (most abundant ion in the spectrum equals 100%) must be present in the sample spectrum.

MASTER

ESS Laboratory. This document may be reproduced solely for internal use

11.9.2 The relative intensities of ions must agree within plus or minus 30% between the standard and sample spectra. (Example: For an ion with an abundance of 50% in the standard spectrum, the corresponding sample abundance must be between 20 and 80 percent.)

11.9.2.1 Molecular ions present in the reference spectrum should be present in the sample spectrum.

11.9.2.2 Ions present in the sample spectrum but not in the reference spectrum should be reviewed for possible background contamination or presence of co-eluting compounds.

11.9.2.3 Ions present in the reference spectrum, but not in the sample spectrum should be reviewed for possible subtraction from the sample spectrum because of background contamination or co-eluting peaks. Data system library reduction programs can sometimes create these discrepancies.

11.9.3 For samples containing components not associated with the calibration standards, a library search may be made for the purpose of tentative identification. The necessity to perform this type of identification will be determined by the purpose of the analyses being conducted. When serving the role as QA (or referee) laboratory, tentatively identified compounds (TICs) are always reported. Computer-generated library search routines should not use normalization routines that would misrepresent the library or unknown spectra when compared to each other. For example, the RCRA permit or waste de-listing requirements may require the reporting of non-target analytes. Only after visual comparison of sample spectra with the nearest library searches will the mass spectral interpretation specialist assign a tentative identification. Guidelines for making tentative identification are as follows:

11.9.3.1 Relative intensities of major ions in the reference spectrum (ions > 10% of the most abundant ion) should be present in the sample spectrum.

11.9.3.2 The relative intensities of the major ions should agree within ±20%. (Example: For an ion with an abundance of 50% in the standard spectrum, the corresponding sample ion abundance must be between 30 and 70 %.)

11.9.3.3 Molecular ions present in the reference spectrum should be present in the sample spectrum. Ions present in the sample spectrum but not in the reference spectrum should be reviewed for possible background contamination or presence of co-eluting compounds.

MASTER

ESS Laboratory. This document may be reproduced solely for internal use

11.9.3.4 Ions present in the reference spectrum, but not in the sample spectrum should be reviewed for possible subtraction from the sample spectrum because of background contamination or co-eluting peaks. Data system library reduction programs can sometimes create these discrepancies.

11.10 The analyst will check the internal standard area counts for all calibration standards, QC samples, and samples for quantitation. If the area for any of the CCV internal standards changes by a factor of two (-50% to +100%) from the mid-point standard of the initial calibration, the mass spectrometer must be inspected for malfunctions and corrections must be made, as appropriate. All sample internal standards must be -50 to 200% of their associated CCV. If the internal standard area counts fail this criterion, the following corrective actions should be considered:

11.10.1 Check to ensure there was no error in internal standards preparation or addition. Also, check instrument performance.

11.10.2 If the CCV failed criterion, re-analyze once. If this second consecutive CCV still does not meet criterion, then a new initial calibration must be performed.

11.10.3 If the internal standards for samples are outside criterion, then re-analyze once. If re-analysis produces results within criteria, then report these results. If the re-analysis is still outside criterion, discuss matrix issue in project narrative. ***NOTE: If an obvious matrix effect is displayed on the chromatogram (Unresolved complex mixture, UCM), then re-analysis is not necessary. MA-MCP and CT RCP projects must have a copy of the chromatogram included with the report.***

11.11 The analyst must verify all reported results are derived from analytical results that are below the highest standard of the initial calibration curve and above the low standard. Values reported below the low standard are to be reported as estimated values (J values). For samples that exceed the calibration curve, dilute and analyze an appropriate sample aliquot.

11.12 All pertinent QA/QC information is to be reported in Attachment D. A second level of review must be performed by a second analyst and noted in Attachment D.

12.0 REFERENCES

12.1 Methods SW846-8270C and D, Test Methods for the Analysis of Solid Waste.
12.2 HP GC EnviroQuant User's Guide, HPG1045A
12.3 HP Environmental Data Analysis User's Guide HPG0032C
12.4 HP 6890 GC Operations Manual
12.5 HP 5890 Series II Operations Manual
12.6 HP 5971A MS Operations Manual
12.7 HP 5973 MS Operations Manual
12.8 TNI Standard: Volume 1, Module 2 and Volume II, Module 4

ESS Laboratory. This document may be reproduced solely for internal use
MASTER

12.9 Massachusetts MCP WSC-CAM Section II B, Revision 1, Final.

13.0 POLLUTION PREVENTION and WASTE MANAGEMENT

13.1 ESS Laboratory's policies on pollution prevention and waste management are covered in SOP 90_0002, Hazardous Waste Contingency and Emergency Response Plan. All employees are trained in the requirements of the SOP.

14.0 METHOD PERFORMANCE

14.1 Precision and Accuracy data must be generated by all employees before performing this analysis on client samples. The data is generated by analyzing a method blank and four blank spike samples. Acceptance criteria are 45-135% Recovery and %RSD of ≤ 30%. Four (4) sporadic marginal exceedances are allowed.

14.2 The precision and accuracy data in Table 1 were obtained using the SOP. Values are in ug/L.

15.0 TABLES, DIAGRAMS, FLOWCHARTS, AND VALIDATION DATA

Table 1. Typical Precision and Accuracy data generated 11/03/13 (Prep Method 3520)

Compound Name	RSD	%Rec	Compound Name	RSD	%Rec
N-Nitrosodimethylamine	8	101	Acenaphthylene	3	86
Pyridine	2	81	2,6-Dinitrotoluene	2	91
2-Fluorophenol (Surr)	10	101	2-Nitroaniline	5	74
bis(2-Chloroethyl)ether	9	72	Acenaphthene	3	84
Phenol-d5 (Surr)	6	114	2,4-Dinitrophenol	6	74
2-Chlorophenol	5	78	Dibenzofuran	3	88
Phenol	5	75	4-Nitrophenol	8	83
Aniline	3	64	3-Nitroaniline	3	91
2-Chlorophenol-d4(Surr)	6	117	2,4-Dinitrotoluene	4	96
1,3-Dichlorobenzene	9	68	Fluorene	3	90
1,4-Dichlorobenzene	8	71	2,3,4,6-Tetrachlorophenol	5	100
1,2 Dichlorobenzene-d4(Surr)	5	77	Diethylphthalate	2	93
1,2-Dichlorobenzene	7	74	4-Chloro-phenyl-phenyl ether	4	88
Benzyl Alcohol	3	83	4-Nitroaniline	6	95
bis(2-chloroisopropyl)ether	6	83	4,6-Dinitro-2-methylphenol	7	82
2-Methylphenol	5	84	n-Nitrosodiphenylamine	5	92
Acetophenone	5	87	Azobenzene	8	80

MASTER

n-Nitroso-di-n-propylamine	4	78	2,4,6-Tribromophenol (Surr)	7	138
Hexachloroethane	7	70	4-Bromophenyl-phenylether	7	88
3+4-Methylphenol	4	171	Hexachlorobenzene	8	88
Nitrobenzene-d5 (Surr)	8	80	Pentachlorophenol	10	95
Nitrobenzene	8	81	Phenanthrene	6	90
Isophorone	6	84	Anthracene	5	90
2-Nitrophenol	5	89	Carbazole	6	94
Benzoic Acid	11	75	Di-n-butylphthalate	5	96
2,4-Dimethylphenol	7	89	Fluoranthene	7	95
bis(2-Chloroethoxy)methane	7	80	Benzidine	21	37
2,4-Dichlorophenol	7	88	Pyrene	3	85
1,2,4-Trichlorobenzene	8	81	Terphenyl-d14 (Surr)	7	89
Naphthalene	6	87	Butylbenzylphthalate	1	95
4-Chloroaniline	5	75	3,3'-Dichlorobenzidine	8	79
Hexachlorobutadiene	7	81	Benzo(a)anthracene	11	84
4-Chloro-3-methylphenol	3	92	Chrysene	4	89
2-Methylnaphthalene	6	87	bis(2-Ethylhexyl)phthalate	3	96
Hexachlorocyclopentadiene	7	45	Di-n-octylphthalate	3	97
2,4,6-Trichlorophenol	4	86	Benzo(b)fluoranthene	4	88
2,4,5-Trichlorophenol	4	94	Benzo(k)fluoranthene	5	93
2-Fluorobiphenyl (Surr)	4	84	Benzo(a)pyrene	6	81
Biphenyl	5	84	Indeno(1,2,3-cd)pyrene	6	86
2-Chloronaphthalene	4	80	Dibenzo(a,h)anthracene	4	93
Dimethylphthalate	4	90	Benzo(g,h,i)perylene	3	85

MASTER

TABLE 2
DFTPP KEY IONS AND ION CRITERIA

MASS	ION ABUNDANCE CRITERIA	MASS	ION ABUNDANCE CRITERIA
51	30% to 60% of mass 198	199	5% to 9% of mass 198
68	< 2% of mass 69	275	10% to 30% of mass 198
69	< 100% of mass 198	365	> 1% of mass 198
70	< 2% of mass 69	441	Present but less than mass 443
127	40% to 60% of mass 198		> 40% of mass 198
197	< 1% of mass 198	442	17% to 23% of mass 442
198	Base peak, 100% relative abundance	443	

Degradation of DDT to DDE and DDD should not exceed 20%. Benzidine and Pentachlorophenol should be present at their normal response and no peak tailing should be visible.

MASTER

ESS Laboratory. This document may be reproduced solely for internal use.

Table 5
Characteristic Ions for Semi-volatile Compounds
Page 1 of 3

Compound	Primary Ion	Secondary Ion(s)
Phenol	94	65, 66
Bis(2-chloroethyl)ether	93	63, 95
2-Chlorophenol	128	64, 130
1,3-Dichlorobenzene	146	148, 111
1,4-Dichlorobenzene-d_4 (I.S.)	152	150, 115
1,4-Dichlorobenzene	146	148, 111
Benzyl alcohol	108	79, 77
1,2-Dichlorobenzene	146	148, 111
N-Nitrosomethylethylamine	88	42, 88, 43, 56
Bis(2-chloroisopropyl)ether	45	77, 121
n-Nitroso-di-n-propylamine	70	42, 101, 130
Hexachloroethane	117	201, 199
Nitrobenzene	77	123, 65
Isophorone	82	95, 138
N-Nitrosodiethylamine	102	102, 42, 57, 44, 56
2-Nitrophenol	139	109, 65
2,4-Dimethylphenol	122	107, 121
Bis(2-chloroethoxy)methane	93	95, 123
Benzoic acid	122	105, 77
2,4-Dichlorophenol	162	164, 98
1,2,4-Trichlorobenzene	180	182, 145
Naphthalene-d_8 (I.S.)	136	68
Naphthalene	128	129, 127
Hexachlorobutadiene	225	223, 227
4-Chloro-3-Methylphenol	107	144, 142
2-Methylnaphthalene	142	141
2-Methylphenol	107	107, 108, 77, 79, 90
Hexachlorocyclopentadiene	237	235, 272
N-Nitrosopyrrolidine	100	100, 1, 42, 68, 69
Acetophenone	105	71, 105, 51, 120
4-Methylphenol	107	107, 108, 77, 79, 90

ESS Laboratory. This document may be reproduced solely for internal use

MASTER

Table 5
Characteristic IONS for Semivolatile Compounds
Page 2 of 3

Compound	Primary Ion	Secondary Ion(s)
2,4,6-Trichlorophenol	196	198, 200
2-Chloronaphthalene	162	127, 164
1-Chloronaphthalene	162	127, 164
2-Nitroaniline	65	92, 138
Dimethyl phthalate	163	194, 164
Acenaphthalene	152	151, 153
2,6-Dinitrotoluene	165	63, 89
3-Nitroaniline	138	108, 92
Acenaphthene-d_{10} (I.S.)	164	162, 160
Acenaphthene	154	153, 152
2,4-Dinitrophenol	184	63, 154
2,6-Dinitrophenol	162	162, 164, 126, 98, 63
4-Chloroaniline	127	127, 129, 65, 92
Dibenzofuran	168	139
4-Nitrophenol	139	109, 65
Diethyl phthalate	149	177, 150
Fluorene	166	165, 167
N-Nitrosodibutylamine	84	84, 57, 41, 116, 158
4-Chlorophenyl phenyl ether	204	206, 141
4,6-Dinitro-2-methylphenol	198	51, 105
N-Nitrosodiphenylamine	169	168, 167
2,4,5-Trichlorophenol	196	196, 198, 97, 132, 99
Hexachlorobenzene	284	142, 249
Pentachlorophenol	266	264, 268
4-Nitroaniline	138	138, 65, 108, 92, 80, 39
Phenanthrene-d_{10} (I.S.)	188	94, 80
Phenanthrene	178	179, 176
Anthracene	178	176, 179
1,4-Dinitrobenzene	168	168, 75, 50, 76, 92, 122
Di-n-butyl phthalate	149	150, 104
Fluoranthene	202	101, 203

ESS Laboratory. This document may be reproduced solely for internal use

MASTER

Table 5
Characteristic IONS for Semivolatile Compounds
Page 3 of 3

Compound	Primary Ion	Secondary Ion(s)
Pyrene	202	200, 203
Butyl benzyl phthalate	149	91, 206
4-Nitrobiphenyl	199	199, 152, 141, 169, 151
Benz(a)anthracene	228	229, 226
Chrysene-d_{12} (I.S.)	240	120, 236
3,3'Dichlorobenzidine	252	254, 126
Chrysene	228	226, 229
Bis(2-ethylhexyl)phthalate	149	167, 279
3,3-Dimethylbenzene	212	212, 106, 196, 180
Di-n-octyl phthalate	149	167, 43
Benzo(b)fluoranthene	252	253, 125
Benzo(k)fluoranthene	252	253, 125
Benzo(a)pyrene	252	253, 125
Perylene-d_{12} (I.S.)	264	260, 265
Indeno(1,2,3-cd)pyrene	276	138, 227
Dibenz(a,h)anthracene	278	139, 279
Benzo(g,h,i)perylene	276	138, 277
Pyridine	79	52
Aniline	93	62, 65
Biphenyl	154	153, 76
Carbazole	162	166, 139

MASTER

16.0 DEFINITIONS

16.1 **Accuracy**: The closeness of agreement between an observed value and an accepted reference value. When applied to a set of observed values, accuracy will be a combination of a random component and of a common systematic error (or bias) component.

16.2 **Batch**: A group of samples which behave similarly with respect to the sampling or the testing procedures being employed and which are processed as a unit. For QC purposes, if the number of samples in a group is greater than 20, then each group of 20 samples or less will all be handled as a separate batch.

16.3 **Bias**: The deviation due to matrix effects of the measured value (x_s - x_u) from a known spiked amount, where x_s is the spiked sample and x_u is the un-spiked sample. Bias can be assessed by comparing a measured value to an accepted reference value in a sample of known concentration or by determining the recovery of a known amount of contaminant spiked into a sample (matrix spike).

16.4 **Control Sample**: A QC sample introduced into a process to monitor the performance of the system.

16.5 **Equipment Blank**: A sample of analyte-free media which has been used to rinse the sampling equipment. It is collected after completion of decontamination and prior to sampling. This blank is useful in documenting adequate decontamination of sampling equipment.

16.6 **Method Reporting Limit (may coincide with the LLOQ, Lower Limit of Quantitation)**: The lowest concentration that can be reliably achieved within specified limits of precision and accuracy during routine laboratory operating conditions. The MRL is generally 5 to 10 times the MDL. ESS Laboratory sets the MRL to the lowest non-zero standard in the calibration curve or higher.

16.7 **Field Duplicates**: Independent samples which are collected as close as possible to the same point in space and time. They are two separate samples taken from the same source, stored in separate containers, and analyzed independently. These duplicates are useful in documenting the precision of the sampling process.

16.8 **Blank Spike (BS)**: A known matrix spiked with compound(s) representative of the target analytes. This is used to document laboratory performance.

16.9 **Matrix**: The component or substrate (e.g., surface water, drinking water) which contains the analyte of interest.

16.10 **Matrix Duplicate**: An intra-laboratory split sample which is used to document the precision of a method in a given sample matrix.

MASTER

16.11 **Matrix Spike**: An aliquot of sample spiked with a known concentration of target analyte(s). The spiking occurs prior to sample preparation and analysis. A matrix spike is used to document the bias of a method in a given sample matrix.

16.12 **Matrix Spike Duplicates**: Intra-laboratory split samples spiked with identical concentrations of target analyte(s). The spiking occurs prior to sample preparation and analysis. They are used to document the precision and bias of a method in a given sample matrix.

16.13 **Method Blank**: An analyte-free matrix to which all reagents are added in the same volumes or proportions as used in sample processing. The method blank should be carried through the complete sample preparation and analytical procedure. The method blank is used to document contamination resulting from the analytical process.

16.14 **Method Detection Limit (MDL)**: The minimum concentration of a substance that can be measured and reported with 99% confidence that the analyte concentration is greater than zero and is determined from analysis of a sample in a given matrix type containing the analyte. See SOP 110_0013 for further explanation.

16.15 **Organic-Free Reagent Water**: For volatiles, all references to water in the method refer to water in which an interferant is not observed at the method detection limit of the compounds of interest. A water purification system is used to generate organic-free deionized water.

16.16 **Records**: Include all logbooks, papers, machine readable materials, or other documentary materials, regardless of physical form or characteristics.

16.17 **Surrogate**: An organic compound which is similar to the target analyte(s) in chemical composition and behavior in the analytical process, but which is not normally found in environmental samples.

16.18 **Trip Blank**: A sample of analyte-free media taken from the laboratory to the sampling site and returned to the laboratory unopened. A trip blank is used to document contamination attributable to shipping and field handling procedures. This type of blank is useful in documenting contamination of volatile organics samples.

17.0 PERSONNEL QUALIFICATIONS

17.1 Analysts who perform this analysis must have a working knowledge or quantitative and qualitative analysis, instrumental methods of analysis, chemical laboratory methods, and equipment.

17.2 All analysts, before performing any analysis, participate in the ESS Laboratory training program (SOP80_0016). The training process consists of reading the Standard Operating Procedure, gaining instruction on the procedure from an experienced analyst, and performing the initial demonstration of capability.

ESS Laboratory. This document may be reproduced solely for internal use
MASTER

18.0 TROUBLESHOOTING

18.1 **Daily Maintenance**: The following maintenance is performed prior to calibration or sample analysis. The purpose of this maintenance is to clean the injection system.

- Cool injection port and oven to room temperature.
- Turn off gas flow by setting EPC to 0.0. Access EPC by pressing the yellow shift key on the GC control panel then hitting the Injector B Temp button.
- Disconnect the column and cap the end with old septa.
- Remove septum nut and weldment.
- Take out liner and clean with methylene chloride using a cotton swab.
- Clean gold seal and inside the injection port.
- Re-attach the gold seal, replace liner and o-ring.
- Clean weldment Inlet and septum holder.
- Clean septum nut.
- Screw on weldment and replace septa if needed. The septa nut should be finger tight.
- Clip off about 6" of column and re-connect.
- Set EPC to 7.0, bake out injection port at 275°C and set oven temperature to 320°C for 30 minutes.
- Clean Injection syringe and guide
- Record daily maintenance in the Semi-Volatile maintenance logbook, Attachment D.

18.2 If DFTPP criteria are not met, the analysis must be repeated. Sample analysis can not begin until DFTPP meets acceptance criteria. Repeated failures indicate that the MS acquisition parameters must be adjusted. These parameters should be adjusted in manual tune, saved and the tune repeated.

18.3 If manual or auto-tune does not produce DFTPP spectra within acceptance criteria, the MS source may need cleaning. Cleaning instructions are found in the MS detector manual.

18.4 See laboratory supervisor or operations manager for all other maintenance problems.

18.5 Record all maintenance in the instrument's maintenance logbook.

19.0 DATA MANAGEMENT AND RECORDS

19.1 **Data Management** - ESS Laboratory utilizes the Promium Element LIMS system as part of its Data Management system. Client sample information is entered into

ESS Laboratory. This document may be reproduced solely for internal use
MASTER

ELEMENT LIMS and analyses are assigned to each sample. The LIMS allows EPA hold times, minimum batch QC requirements, and QC criteria to be assigned to each analysis. Standards can be entered and assigned to QC samples through the LIMS. Once analysis has been performed, data is imported using DataTool avoiding manual errors. In conjunction with Crystal Reports, the ELEMENT system allows for a wide variety of reporting formats.

19.2 **Records** – The specific retention periods required in the NELAC Standards, EPA-CFR and state and local statutes are followed or exceeded. At a minimum, data records are retained for five years from last use (10 years for drinking water). If there is a question about whether a record should be retained or disposed because no specific requirement could be found, the record is retained until such time as a retention period is specified. Records are stored in specified-labeled locations and are easily retrievable. All raw data associated with testing is also retained including; computer printouts, chromatograms, review forms, and logbooks.

20.0 ATTACHMENTS

Appendix A Low Level PAH, Hexachlorobenzene and Pentachlorophenol analysis.

Appendix B Certificates of Analysis.

Appendix C Enviroquant Method.

Appendix D Sequence (Run) Logs and Maintenance Log.

Appendix E Deleted

Appendix F MADEP CAM Method Quality Objectives.

Appendix G CPSC Phthalate Analysis Procedure.

Appendix H 1,4-Dioxane Analysis using Isotope Dilution.

Appendix J 1,4-Dioxane Analysis by Method 522, Solid Phase Extraction.

MASTER

APPENDIX A

Low Level PAHs, Hexachlorobenzene and Pentachlorophenol Analysis by 8270D SIM

Method Summary: Aqueous samples are extracted by EPA Method 3510C. Extracts are concentrated to a final volume of 0.25 mls. Soil samples are extracted by EPA Methods 3541 or 3546 and concentrated to a final volume of 0.5 ml. Samples are analyzed by GC/MS in selective ion monitoring mode to achieve low detection limits. (refer to MDL and LOD verification spreadsheets filed in dedicated network directory folder).

The following are the 8270 modifications. Refer to SOP 60_ 8270 and appropriate preparation method SOPs for all other procedures:

I. Standards
   a. Stock: A 5ppm intermediate stock is prepared from the 250ppm 8270 stock by diluting 20ul to 1 ml with methylene chloride.
   b. Working Standards:

Standard	Amount of Stock Added (ul)	Final Volume ml	Final Conc. On Column ug/ml
Level 0.05	10ul of 5ppm	1	0.05
Level 0.1	20ul of 5ppm	1	0.1
Level 0.2	40ul of 5ppm	1	0.2
Level 0.5	100ul of 5ppm	1	0.5
Level 1.0	200ul of 5ppm	1	1.0
Level 2.0	400ul of 5ppm	1	2.0
Level 5.0 (CCV)	1000ul of 5ppm	1	5.0
Level 10	40ul of 250ppm	1	10
Level 20	80ul of 250ppm	1	20
Level 50	200ul of 250ppm	1	50
SS 5.0	100ul of 50ppm	1	5.0

   c. Internal Standard: The 4000ppm 8270 internal standard mix standard is used. Spike 5ul per 1ml of extract.
   d. Surrogate Standard: Use the 100 ppm SVOA surrogate spiking solution.
      i. Aqueous samples and QC spike volume is 25µl.
      ii. Soil Samples and QC spike is 50µl.
   e. Matrix spike solution: Use the 100 ppm SVOA matrix spike.
      i. Aqueous samples and QC spike 40µl.
      ii. Soil samples and QC spike 40µl.

MASTER

II. Extraction:

a. Aqueous: Up to 1L of sample is shaken by separatory funnel (3510C) with methylene chloride using an acid extraction. An acid/base extraction is performed for pyridine, The appropriate surrogates and spikes are added. The extract is concentrated to a final volume of 0.25ml in an NEVAP and measured with a 500 µl graduated Hamilton syringe. The extract is transferred to a microinsert in a GC target vial for analysis. The vial is capped. 1.25 µl of the 4000ppm internal standard is spiked into the 250µl extract. (5µl is added to each 1ml standard.) This will produce a 20ppm on column concentration of Internal Standard.

b. Soil: 15grams is extracted by EPA Method 3541 or 3546. The appropriate surrogates and spikes are added. The extract is concentrated to 0.5ml and transferred to a GC target vial and capped. 2.5µl of the 400 ppm internal standard is spiked into each extract.

III. Analysis:

a. Tune: Performed in full scan mode. Ion ratios evaluated and must meet 8270 criteria. Analyzed prior to analysis, every 12 hours.

b. ICAL: All analytes <20% or Corr >= 0.99. Quad only acceptable for PCP and must be > 0.99 corr.

c. SCV: 70-130% recovery. No failures.

d. CCV: 70-130% No failures. Analyzed prior to sample analysis with no failures.

e. All analytes including surrogates and internal standards analyzed in selective ion monitoring mode. The following is a list of analytes and ions scanned:

Group	Analyte	Type	Ions in Group	Start Scan Time	Stop Scan Time
	Baseline		74	1	
1	1,4-Dioxane		52,58,64,79,88,96	2.4	6
	1,4-Dioxane-d8				
	Pyridine				
2	1,4-DCB-d4		82,128,141,142,151	6	15.5
	1,2-DCB-d4		152,153,154,54,171		
	Nitrobenzene-d5		172,129,76,115,136		
	Napthalene-d10		68,160,162,164,163		
	Naphthalene		194		
	2-Methylnaphthalene				
	1-Methylnaphthalene				
	1,1-Biphenyl				
	Dimethylphthalate				
	2-Fluorobiphenyl				
	Acenaphthylene				
	Acenaphthene-d10				
	Acenaphthene				

MASTER

ESS Laboratory. This document may be reproduced solely for internal use

3	Fluorene 2,4,6-Tribromophenol Pentachlorophenol Phenanthrene-d10 Diethylphthalate Hexachlorobenzene Phenanthrene Pentachloronitrobenzene Anthracene	149,177,150,141,165 166,176 178,237,249,264,284 295,188,94,167,142 265,179,330,332 266,268	15.5	19.5
4	Di-n-butylphthalate Fluoranthene Pyrene Terphenyl-d14	202,101,100 244,122,212,149,150 104,264,266,268	19.5	23
5	Butylbenzylphthalate Benzo(a)anthracene Chrysene-d12 Chrysene Bis(2-ethylhexyl)phthalate	240,236,120,228 226,229,149,91 206,167,279,150,252 253,125	23	25.8
6	Di-n-octylphthalate Benzo(b) Benzo(k) Benzo(a)pyrene Perylene-d12	264,260,265,252 253,125,149,150,167 279	25.8	29
7	Indeno 123 Dibenzo(ah) Benzo(ghi)	276,138,278,279 139,277	29	34

IV: Reporting: On column results in µg/ml. Final results in ppb are calculated using initial and final volumes. See SOP 60_8270.

MASTER

ESS Laboratory. This document may be reproduced solely for internal use

ULTRA SCIENTIFIC
Analytical Solutions

Appendix B

Certificate of Analysis

OE05077-80

Semi-Volatiles Mixture

Product Number: SVM-8270 **Page:** 1 of 3

Lot Number: CG-0219 **Lot Issue Date:** Jan-2010 **Expiration Date:** Feb-2011

This Certified Reference Material (RM) was manufactured and verified in accordance with ULTRA's ISO 9001 registered quality system, and the analyte concentrations were verified by our ISO 17025 accredited laboratory. The true value and uncertainty value at the 95% confidence level for each analyte, determined gravimetrically, is listed below.

Analyte	CAS#	Analyte Lot	True Value
acenaphthene	000083-32-9	29697-41	1002 ± 5 µg/mL
acenaphthylene	000208-96-8	ER030707-01	1000 ± 5 µg/mL
anthracene	000120-12-7	33383-91	1002 ± 5 µg/mL
benz[a]anthracene	000056-55-3	ER121707-01	1002 ± 5 µg/mL
benzo[b]fluoranthene	000205-99-2	ER022008-02	1002 ± 5 µg/mL
benzo[k]fluoranthene	000207-08-9	34750-27	1002 ± 5 µg/mL
benzo[ghi]perylene	000191-24-2	ER041205-01	1002 ± 5 µg/mL
benzo[a]pyrene	000050-32-8	ER050707-01	1002 ± 5 µg/mL
carbazole	000086-74-8	CEE-III-129	1002 ± 5 µg/mL
chrysene	000218-01-9	ER081006-02	1002 ± 5 µg/mL
dibenz[a,h]anthracene	000053-70-3	ER091206-01	1002 ± 5 µg/mL
fluoranthene	000206-44-0	LB50809	1000 ± 5 µg/mL
fluorene	000086-73-7	04003CK	1002 ± 5 µg/mL
indeno[1,2,3-cd]pyrene	000193-39-5	ER082107-02	1002 ± 5 µg/mL
naphthalene	000091-20-3	14205KB	1001 ± 5 µg/mL
phenanthrene	000085-01-8	07419ME	1002 ± 5 µg/mL
pyrene	000129-00-0	01216PE	1002 ± 5 µg/mL
azobenzene	000103-33-3	04606DF	1003 ± 5 µg/mL
4-chloroaniline	000106-47-8	01310MW	1001 ± 5 µg/mL
2-chloronaphthalene	000091-58-7	FIE01	1001 ± 5 µg/mL

ULTRA uses balances calibrated with weights traceable to NIST in compliance with ANSI/NCSL Z-540-1 and ISO 9001, and calibrated Class A glassware in the manufacturing of these standards.

EDITED

ISO 17025 Accredited A2LA Cert. No. 0851-01

ISO 9001:2000 Registered TUV USA, Inc. Cert. No. 06-1004

250 Smith Street, North Kingstown, RI 02852 USA
401-294-9400 Fax: 295-2330
www.ultrasci.com

William J. Leary
Quality Assurance Manager

ULTRA SCIENTIFIC
Analytical Solutions

Certificate of Analysis

Semi-Volatiles Mixture

Product Number: SVM-8270 **Page:** 2 of 3

Lot Number: CG-0219 **Lot Issue Date:** Jan-2010 **Expiration Date:** Feb-2011

Analyte	CAS#	Analyte Lot	True Value
4-chloro-3-methylphenol	000059-50-7	061657	1000 ± 5 µg/mL
dibenzofuran	000132-64-9	480477	1001 ± 5 µg/mL
1,4-dichlorobenzene	000106-46-7	22628EB	1003 ± 5 µg/mL
2,4-dichlorophenol	000120-83-2	05729EZ	1001 ± 5 µg/mL
2-methyl-4,6-dinitrophenol	000534-52-1	168-60A	1003 ± 5 µg/mL
2,4-dinitrophenol	000051-28-5	12310CU	1000 ± 5 µg/mL
2,4-dinitrotoluene	000121-14-2	18219TA	1000 ± 5 µg/mL
2,6-dinitrotoluene	000606-20-2	08328CR	1003 ± 5 µg/mL
hexachlorobenzene	000118-74-1	02927MC	1002 ± 5 µg/mL
hexachloroethane	000067-72-1	12604HB	1004 ± 5 µg/mL
pentachlorophenol	000087-86-5	06324ED	1002 ± 5 µg/mL
2-nitrophenol	000088-75-5	N960045	1003 ± 5 µg/mL
4-nitrophenol	000100-02-7	LO1OL	1003 ± 5 µg/mL
2-nitroaniline	000088-74-4	13201TU	1004 ± 5 µg/mL
3-nitroaniline	000099-09-2	03020DL	1002 ± 5 µg/mL
4-nitroaniline	000100-01-6	3926DK	1002 ± 5 µg/mL
2,4,5-trichlorophenol	000095-95-4	07521CO	1004 ± 5 µg/mL
2,4,6-trichlorophenol	000088-06-2	07509ME	1004 ± 5 µg/mL
bis(2-chloroethyl) ether	000111-44-4	BC-013187	1004 ± 5 µg/mL
bis(2-chloroethoxy)methane	000111-91-1	381-90A	1002 ± 5 µg/mL
bis(2-ethylhexyl) phthalate	000117-81-7	D-23230	1002 ± 5 µg/mL
4-bromophenyl phenyl ether	000101-55-3	05819CO	1002 ± 5 µg/mL
butyl benzyl phthalate	000085-68-7	05613ED	1003 ± 5 µg/mL
4-chlorophenyl phenyl ether	007005-72-3	28314CA	1004 ± 5 µg/mL

ULTRA uses balances calibrated with weights traceable to NIST in compliance with ANSI/NCSL Z-540-1 and ISO 9001, and calibrated Class A glassware in the manufacturing of these standards.

WAS HELD

A2LA ACCREDITED

ISO 17025 Accredited A2LA Cert. No. 0851-01

ISO 9001:2000 Registered TUV USA, Inc. Cert. No. 06-1004

250 Smith Street, North Kingstown, RI 02852 USA
401-294-9400 Fax: 295-2330
www.ultrasci.com

William J. Leahy
Quality Assurance Manager

ULTRA SCIENTIFIC
Analytical Solutions

Certificate of Analysis

Semi-Volatiles Mixture

Product Number: SVM-8270 **Page:** 3 of 3

Lot Number: CG-0219 **Lot Issue Date:** Jan-2010 **Expiration Date:** Feb-2011

Analyte	CAS#	Analyte Lot	True Value
2-chlorophenol	000095-57-8	09106BQ	1000 ± 5 µg/mL
di-n-butyl phthalate	000084-74-2	AC-011667	1001 ± 5 µg/mL
1,2-dichlorobenzene	000095-50-1	08946KY	1003 ± 5 µg/mL
1,3-dichlorobenzene	000541-73-1	05902LZ	1003 ± 5 µg/mL
diethyl phthalate	000084-66-2	09615KD	1001 ± 5 µg/mL
2,4-dimethylphenol	000105-67-9	14822JF	1001 ± 5 µg/mL
dimethyl phthalate	000131-11-3	D-44220	1000 ± 5 µg/mL
di-n-octyl phthalate	000117-84-0	0001418030	1000 ± 5 µg/mL
hexachlorobutadiene	000087-68-3	339923/1	1002 ± 5 µg/mL
hexachlorocyclopentadiene	000077-47-4	03907AU	1000 ± 5 µg/mL
isophorone	000078-59-1	10830MQ	1002 ± 5 µg/mL
2-methylnaphthalene	000091-57-6	15416DA	1002 ± 5 µg/mL
nitrobenzene	000098-95-3	DI-10604DI	1001 ± 5 µg/mL
N-nitrosodimethylamine	000062-75-9	12070JS	1002 ± 5 µg/mL
N-nitrosodi-n-propylamine	000621-64-7	FIM01	1004 ± 5 µg/mL
1,2,4-trichlorobenzene	000120-82-1	00334TQ	1002 ± 5 µg/mL
o-cresol	000095-48-7	09416AA	1001 ± 5 µg/mL
p-cresol	000106-44-5	09410PI	1003 ± 5 µg/mL
bis(2-chloroisopropyl) ether	000108-60-1	PR-16041	1003 ± 5 µg/mL
phenol	000108-95-2	1373574	1004 ± 5 µg/mL

Matrix: methylene chloride/benzene (3:1)

ULTRA uses balances calibrated with weights traceable to NIST in compliance with ANSI/NCSL Z-540-1 and ISO 9001, and calibrated Class A glassware in the manufacturing of these standards.

ISO 17025 Accredited A2LA Cert. No. 0851-01

ISO 9001:2000 Registered TUV USA, Inc. Cert. No. 06-1004

250 Smith Street, North Kingstown, RI 02852 USA
401-294-9400 Fax: 295-2330
www.ultrasci.com

William J. Leary
Quality Assurance Manager

9K29100,101

RESTEK

Certificate of Analysis

110 Benner Circle
Bellefonte, PA 16823-8812
Tel: (800)356-1688
Fax: (814)353-1309

FOR LABORATORY USE ONLY-READ MSDS PRIOR TO USE.

Catalog No. : 563626 **Lot No.**: A066327

Description : Custom Appendix IX Mix #2

Expiration Date[1]: September 2010 **Storage:** Freezer

Handling: Sonicate ampule 15 minutes prior to opening

Elution Order	Compound	CAS #	Percent Purity [2]	Concentration [3] (weight/volume)	% Uncertainty [4] (95% C.L.; K=2)
1	1,4-Dioxane	123-91-1	99%	1,000.000 ug/ml	+/-0.64 %
2	Ethyl methacrylate	97-63-2	99%	1,000.000 ug/ml	+/-0.64 %
3	Methyl methanesulfonate	66-27-3	99%	1,000.000 ug/ml	+/-0.64 %
4	Ethyl methanesulfonate	62-50-0	99%	1,000.000 ug/ml	+/-0.64 %
5	Benzaldehyde	100-52-7	99%	1,000.000 ug/ml	+/-0.64 %
6	Pentachloroethane	76-01-7	98%	1,000.090 ug/ml	+/-0.64 %
7	Acetophenone	98-86-2	99%	1,000.000 ug/ml	+/-0.64 %
8	2,6-Dichlorophenol	87-65-0	99%	1,000.000 ug/ml	+/-0.64 %
9	Hexachloropropene	1888-71-7	99%	1,000.000 ug/ml	+/-0.64 %
10	epsilon-Caprolactam	105-60-2	99%	1,000.000 ug/ml	+/-0.64 %
11	Isosafrole (cis & trans)	120-58-1	99%	1,000.000 ug/ml	+/-0.64 %
12	1,2,4,5-Tetrachlorobenzene	95-94-3	99%	1,000.000 ug/ml	+/-0.64 %
13	Safrole	94-59-7	99%	1,000.000 ug/ml	+/-0.64 %
14	Biphenyl	92-52-4	99%	1,000.000 ug/ml	+/-0.64 %
15	1-Chloronaphthalene	90-13-1	86%	1,000.180 ug/ml	+/-0.64 %
16	Diphenyl ether	101-84-8	99%	1,000.000 ug/ml	+/-0.64 %
17	1,4-Naphthoquinone	130-15-4	99%	1,000.000 ug/ml	+/-0.64 %
18	Pentachlorobenzene	608-93-5	99%	1,000.000 ug/ml	+/-0.64 %
19	Diallate (cis and trans)	2303-16-4	99%	1,000.000 ug/ml	+/-0.64 %
20	Phenacetin	62-44-2	99%	1,000.000 ug/ml	+/-0.64 %
21	Atrazine	1912-24-9	99%	1,000.000 ug/ml	+/-0.64 %
22	Pentachloronitrobenzene (quintozene)	82-68-8	99%	1,000.000 ug/ml	+/-0.64 %
23	Pronamide (Propyzamide)	23950-58-5	98%	1,000.090 ug/ml	+/-0.64 %
24	4-Nitroquinoline-N-oxide	56-57-5	----%	1,000.000 ug/ml	+/-0.64 %
25	Isodrin	465-73-6	98%	1,000.090 ug/ml	+/-0.64 %
26	Aramite	140-57-8	----%	1,000.000 ug/ml	+/-0.64 %
27	Chlorobenzilate	510-15-6	99%	1,000.000 ug/ml	+/-0.64 %
28	Kepone	143-50-0	99%	1,000.000 ug/ml	+/-0.64 %
29	7,12-Dimethylbenz(a)anthracene	57-97-6	99%	1,000.000 ug/ml	+/-0.64 %
30	3-Methylcholanthrene	56-49-5	99%	1,000.000 ug/ml	+/-0.64 %
31	Dibenz(a,j)acridine	224-42-0	99%	1,000.000 ug/ml	+/-0.64 %

9K24098,99

Certificate of Analysis

110 Benner Circle
Bellefonte, PA 16823-8812
Tel: (800)356-1688
Fax: (814)353-1309

FOR LABORATORY USE ONLY-READ MSDS PRIOR TO USE.

Catalog No. : 31850 **Lot No.:** A070659

Description : 8270 MegaMix

Expiration Date[1]**:** April 2011 **Storage:** Freezer

Handling: Sonicate ampule 15 minutes prior to opening

Elution Order	Compound	CAS #	Percent Purity [2]	Concentration [3] (weight/volume)	% Uncertainty [4] (95% C.L.; K=2)
1	N-Nitrosodimethylamine	62-75-9	99%	1,000.000 ug/ml	+/-0.60 %
2	Pyridine	110-86-1	99%	1,000.000 ug/ml	+/-0.60 %
3	Aniline	62-53-3	99%	1,000.000 ug/ml	+/-0.60 %
4	Phenol	108-95-2	99%	1,000.000 ug/ml	+/-0.60 %
5	Bis(2-chloroethyl)ether	111-44-4	99%	1,000.000 ug/ml	+/-0.60 %
6	2-Chlorophenol	95-57-8	99%	1,000.000 ug/ml	+/-0.60 %
7	1,3-Dichlorobenzene	541-73-1	99%	1,000.000 ug/ml	+/-0.60 %
8	1,4-Dichlorobenzene	106-46-7	99%	1,000.000 ug/ml	+/-0.60 %
9	Benzyl alcohol	100-51-6	99%	1,000.000 ug/ml	+/-0.60 %
10	1,2-Dichlorobenzene	95-50-1	99%	1,000.000 ug/ml	+/-0.60 %
11	2-Methylphenol (o-cresol)	95-48-7	99%	1,000.000 ug/ml	+/-0.60 %
12	Bis(2-chloroisopropyl)ether	108-60-1	99%	1,000.000 ug/ml	+/-0.60 %
13	4-Methylphenol (p-cresol)	106-44-5	99%	500.000 ug/ml	+/-0.60 %
14	3-Methylphenol (m-cresol)	108-39-4	99%	500.000 ug/ml	+/-0.60 %
15	N-Nitroso-di-n-propylamine	621-64-7	99%	1,000.000 ug/ml	+/-0.60 %
16	Hexachloroethane	67-72-1	99%	1,000.000 ug/ml	+/-0.60 %
17	Nitrobenzene	98-95-3	99%	1,000.000 ug/ml	+/-0.60 %
18	Isophorone	78-59-1	99%	1,000.000 ug/ml	+/-0.60 %
19	2-Nitrophenol	88-75-5	99%	1,000.000 ug/ml	+/-0.60 %
20	2,4-Dimethylphenol	105-67-9	99%	1,000.000 ug/ml	+/-0.60 %
21	Bis(2-chloroethoxy)methane	111-91-1	99%	1,000.000 ug/ml	+/-0.60 %
22	2,4-Dichlorophenol	120-83-2	99%	1,000.000 ug/ml	+/-0.60 %
23	1,2,4-Trichlorobenzene	120-82-1	97%	999.973 ug/ml	+/-0.60 %
24	4-Chloroaniline	106-47-8	99%	1,000.000 ug/ml	+/-0.60 %
25	Naphthalene	91-20-3	99%	1,000.000 ug/ml	+/-0.60 %
26	Hexachlorobutadiene	87-68-3	98%	1,000.029 ug/ml	+/-0.60 %
27	4-Chloro-3-methylphenol	59-50-7	99%	1,000.000 ug/ml	+/-0.60 %
28	2-Methylnaphthalene	91-57-6	97%	1,000.070 ug/ml	+/-0.60 %
29	1-Methylnaphthalene	90-12-0	99%	1,000.000 ug/ml	+/-0.60 %
30	Hexachlorocyclopentadiene	77-47-4	99%	1,000.000 ug/ml	+/-0.60 %
31	2,4,6-Trichlorophenol	88-06-2	99%	1,000.000 ug/ml	+/-0.60 %
32	2,4,5-Trichlorophenol	95-95-4	99%	1,000.000 ug/ml	+/-0.60 %
33	2-Chloronaphthalene	91-58-7	99%	1,000.000 ug/ml	+/-0.60 %
34	2-Nitroaniline	88-74-4	99%	1,000.000 ug/ml	+/-0.58 %
35	1,4-Dinitrobenzene	100-25-4	99%	1,000.000 ug/ml	+/-0.60 %
36	Acenaphthylene	208-96-8	99%	1,000.000 ug/ml	+/-0.60 %
37	1,3-Dinitrobenzene	99-65-0	99%	1,000.000 ug/ml	+/-0.60 %
38	Dimethylphthalate	131-11-3	99%	1,000.000 ug/ml	+/-0.60 %
39	2,6-Dinitrotoluene	606-20-2	99%	1,000.000 ug/ml	+/-0.60 %
40	1,2-Dinitrobenzene	528-29-0	99%	1,000.000 ug/ml	+/-0.60 %
41	Acenaphthene	83-32-9	99%	1,000.000 ug/ml	+/-0.60 %
42	3-Nitroaniline	99-09-2	99%	1,000.000 ug/ml	+/-0.58 %
43	2,4-Dinitrophenol	51-28-5	97%	1,000.009 ug/ml	+/-0.60 %
44	Dibenzofuran	132-64-9	99%	1,000.000 ug/ml	+/-0.60 %
45	2,4-Dinitrotoluene	121-14-2	99%	1,000.000 ug/ml	+/-0.60 %
46	4-Nitrophenol	100-02-7	99%	1,000.000 ug/ml	+/-0.60 %

9K24095, 97

Certificate of Analysis

110 Benner Circle
Bellefonte, PA 16823-8812
Tel: (800)356-1688
Fax: (814)353-1309

FOR LABORATORY USE ONLY-READ MSDS PRIOR TO USE.

Catalog No. : 31082 **Lot No.:** A062485
Description : B/N Surrogate Standard Mix (3/90)
Expiration Date[1]**:** September 2011 **Storage:** Refrigerate

Elution Order	Compound	CAS #	Percent Purity [2]	Concentration [3] (weight/volume)	Percent Uncertainty [4]
1	1,2-Dichlorobenzene-d4	2199-69-1	99%	5,000.000 ug/ml	+/-0.03 %
2	Nitrobenzene-d5	4165-60-0	99%	5,000.000 ug/ml	+/-0.03 %
3	2-Fluorobiphenyl	321-60-8	99%	5,000.000 ug/ml	+/-0.03 %
4	p-Terphenyl-d14	1718-51-0	97%	4,999.962 ug/ml	+/-0.03 %
Solvent:	Methylene Chloride	75-09-2	99%		

Column: 30m x .25mm x .5um
Rtx-5 (cat.#10238)
Carrier Gas: hydrogen @ 40cm/sec.
Temp. Program: 100°C to 330°C
@ 20°C/min. (hold 5 min.)
Inj. Temp: 250°C
Det. Temp: 300°C
Det. Type: FID

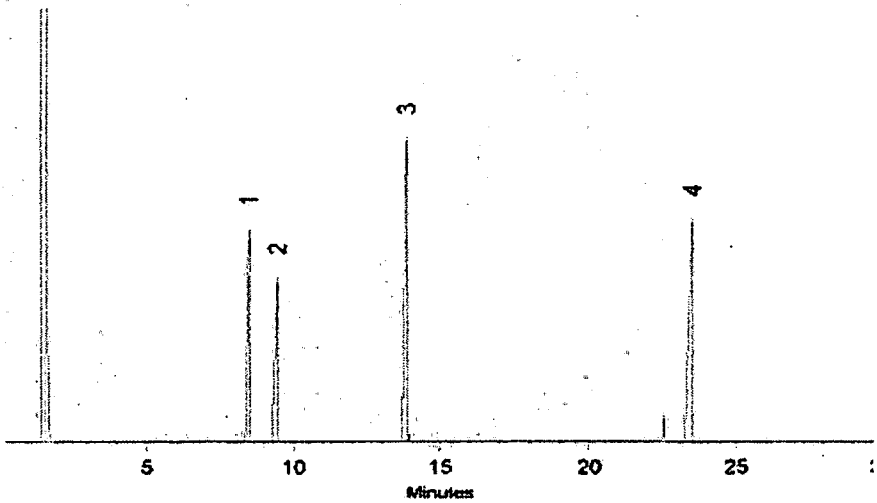

Diane Shaffer
Diane Shaffer - QA Analyst

Balance 1128353505

Manufactured under Restek's ISO 9001:2000
Registered Quality System
Certificate #FM80397

1 Expiration date of the unopened ampul stored at recommended temperature.
2 Purity was determined by one or more of the following techniques: GC/FID, HPLC, GC/ECD, GC/MS. Value rounded to the nearest LOWER whole percentage. In addtion to detectors listed above, chemical identity and purity are confirmed using 1 or more of the following: MS, DSC, solid probe MS, GC/FPD, GC/NPD, GC/TC, FTIR, melting point, refractive index, and Karl Fisher. See data pack or contact Restek for further details.
3 Based upon gravimetric preperation with balance calibration verified using NIST traceable weights (seven mass levels).
4 Percent Uncertainty based upon balance AND ASTM Class A volumetric glassware accuracy.

Tech Tip:

Due to the limited solubility of p-terphenyl-d14 in methanol, we do not recommend that this mixture be diluted in methanol.

MADE IN

AK24094,96

Certificate of Analysis

110 Benner Circle
Bellefonte, PA 16823-8812
Tel: (800)356-1688
Fax: (814)353-1309

FOR LABORATORY USE ONLY-READ MSDS PRIOR TO USE.

Catalog No. : 31083 **Lot No.:** A061440
Description : Acid Surrogate Standard Mix (3/90)
Expiration Date[1]**:** January 2013 **Storage:** Refrigerate

Elution Order	Compound	CAS #	Percent Purity [2]	Concentration [3] (weight/volume)	Percent Uncertainty [4]
1	2-Fluorophenol	367-12-4	99%	7,500.100 ug/ml	+/-0.03 %
2	Phenol-d6	13127-88-3	99%	7,502.200 ug/ml	+/-0.03 %
3	2-Chlorophenol-d4	93951-73-6	99%	7,500.900 ug/ml	+/-0.03 %
4	2,4,6-Tribromophenol	118-79-6	99%	7,500.000 ug/ml	+/-0.03 %
Solvent:	Methanol	67-56-1	99%		

Column: 30m x .25mm x .25um Rtx-5 (cat.#10223)
Carrier Gas: hydrogen @ 40cm/sec.
Temp. Program: 40°C (hold 2 min.) to 330°C @ 10°C/min. (hold 10 min.)
Inj. Temp: 250°C
Det. Temp: 300°C
Det. Type: FID

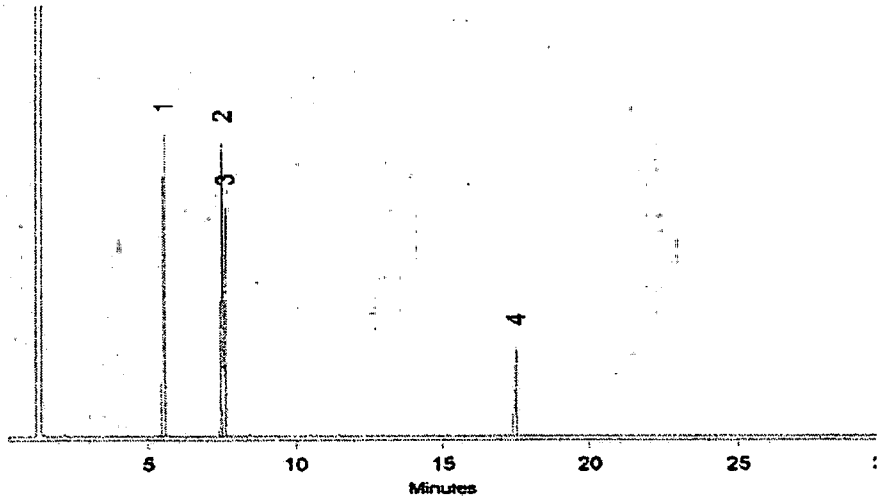

Diane Shaffer
Diane Shaffer - QA Analyst

Balance 1128360905

Manufactured under Restek's ISO 9001:2000 Registered Quality System. Certificate #FM80397

1 Expiration date of the unopened ampul stored at recommended temperature.
2 Purity was determined by one or more of the following techniques: GC/FID, HPLC, GC/ECD, GC/MS. Value rounded to the nearest LOWER whole percentage. In addition to detectors listed above, chemical identity and purity are confirmed using 1 or more of the following: MS, DSC, solid probe MS, GC/FPD, GC/NPD, GC/TC, FTIR, melting point, refractive index, and Karl Fisher. See data pack or contact Restek for further details.
3 Based upon gravimetric preperation with balance calibration verified using NIST traceable weights (seven mass levels).
4 Percent Uncertainty based upon balance AND ASTM Class A volumetric glassware accuracy.

UK24072,73,74,76-93

125 Market Street
New Haven, CT 06513
USA

AccuStandard, Inc.

Tel (203)786-5290
Fax (203)786-5287
Website AccuStandard.com

CERTIFICATE OF ANALYSIS

CATALOG NO: DRH-006S
DESCRIPTION: Proposed DEP(MA) - PAH Mix
LOT: 209101293
SOLVENT: CH2Cl2

EXPIRATION: Oct 29, 2019

See reverse for additional certification information.

Component	CAS #	Purity % (GC/MS)	Prepared Concentration[1] (µg/mL)	Certified Analyte Concentration[2] (µg/mL)
Acenaphthene	83-32-9	100	1005	1005
Acenaphthylene	208-96-8	99.1	1000	991
Anthracene	120-12-7	100	1001	1001
Benz(a)anthracene	56-55-3	99.6	1000	996
Benzo(a)pyrene	50-32-8	98.9	1002	991
Benzo(b)fluoranthene	205-99-2	100	1004	1004
Benzo(g,h,i)perylene	191-24-2	99.6	1002	998
Benzo(k)fluoranthene	207-08-9	99.5	1000	995
Chrysene	218-01-9	100	1005	1005
Dibenz(a,h)anthracene	53-70-3	99.5	1006	1001
Fluoranthene	206-44-0	99.9	1001	1000
Fluorene	86-73-7	98.1	1007	988
Indeno(1,2,3-cd)pyrene	193-39-5	98.2	1006	988
2-Methylnaphthalene	91-57-6	100	1004	1004
Naphthalene	91-20-3	99.8	1004	1002
Phenanthrene	85-01-8	98.9	1002	991
Pyrene	129-00-0	98.6	1006	992

17 Components

1. All weights are traceable through NIST, Test No. 822/272103-05
2. Certified Analyte Concentration = Purity x Prepared Concentration The Uncertainty calculated for this product is ±2% which is the Combined Uncertainty uc(y). It represents an estimated standard deviation equal to the positive square root of the total variance of the uncertainty of components. The Expanded Uncertainty is U which is Uc(y) *K where K is the coverage factor at the 95% confidence level (K=2).
3. A product with a suffix (-1A, -2B, etc. or -01, -02, etc.) on its lot# has had its expiration date extended and is identical to the same lot# without the suffix.

Certified by: R. Cooper

Certificate of Analysis

9K24069

DESCRIPTION: Pentachlorophenol

CATALOG NO.: 48692 MFG DATE: Sep-2008

LOT NO.: LB61534 EXPIRATION DATE: Sep-2011

SOLVENT: METHANOL

ANALYTE	CAS NUMBER	PERCENT PURITY(1)	WEIGHT(2) CONCENTRATION	ANALYTICAL(3) CONCENTRATION		STD DEV	SUPELCO LOT NO
PENTACHLOROPHENOL	87-86-5	98.9	500.5	507.0	+/-	11.92	LB37346

(1) Determined by capillary GC-FID, unless otherwise noted.

(2) NIST traceable weights are used to verify balance calibration with the preparation of each lot. Concentration of analyte in solution is ug/ml +/- 0.5%, uncertainty based upon balance and Class A volumetric glassware. Weights are corrected for analytes less than 98% pure.

(3) Determined by chromatographic analysis against an independently prepared reference lot. Mean of replicate injections.

Elwood Doughty
Quality Control Supervisor

Supelco warrants that its products conform to the information contained in this publication. Purchaser must determine the suitability of the product for its particular use. Please see the latest catalog or order invoice and packing slip for additional terms and conditions of sale.

SUPELCO
595 North Harrison Road
Bellefonte, PA 16823-0048 USA
Phone (814) 359-3441

TOPLEVEL PARAMETERS

(GC/MS-1)

Method Information For: C:\HPCHEM\1\METHODS\SV1NB.M

Method Sections To Run:

Appendix C

Save Copy of Method With Data
Pre-Run Cmd/Macro =
(X) Data Acquisition
( ) Data Analysis
( ) Post-Run Cmd/Macro =

Method Comments:
THIS METHOD IS USED TO ANALYZE FOR BASE-NEUTRAL AND ACID EXTRACTABLE COMPOUNDS USING A CAPILLARY COLUMN. THIS METHOD IS USING TCL SOW 88 LIST. 625 AND 8270 ARE APPLICABLE 02/95.

END OF TOPLEVEL PARAMETERS

ACQUISITION PARAMETERS

General Information

Inlet : GC
Tune File : DFTPP.U
Acquisition Mode : Scan

MS Information

Solvent Delay : 0.75 min

EM Absolute : False
EMV Offset : 0.0
Resulting Voltage : 1835.3

[Scan Parameters]

Low Mass : 35
High Mass : 500
Threshold : 500
Sampling # : 2 A/D Samples 4
Plot 1 low mass : 35
Plot 1 high mass: 500

[Real Time Plot Parameters]

Time Window : 25 min
Iconize Real Time Display : False
Plot 1 type : Extracted ion
Scale minimum : 0
Scale maximum : 400000
Plot 2 type : No plot

GC Inlet Information

[Inlet A Temperature Program Information]

Oven Track : Off
Inlet A Off

[Inlet B Temperature Program Information]

Oven Track : Off
Initial Temp. : 275 C
Initial Time : 480.00 min

Level	Rate (C/min)	Final Temp. (C)	Final Time (min)
1	0		

Total Program Time: 480.00 min

[Inlet A Pressure Program Information]

Constant Flow : On 7.1 psi at 40 C
Pressure Units : psi

[Inlet A Flow Settings]

Column length : 30.00 m
Column diameter : 0.250 mm
Gas : He
Vacuum compensation : On
Pressure : 8.0 psi
Flow : 1.1 ml/min
Linear velocity : 37.5 cm/sec
Split flow : 1 ml/min
Split ratio : 0.9

[Inlet B Pressure Program Information]

Constant Flow : Off
Initial Pres. : 7.1 psi
Initial Time : 0.00 min

Level	Rate(psi/min)	Final Pres.(psi)	Final Time (min)
1	99.00	36.0	0.70
2	99.00	7.1	0.00
3	0		

Total Program Time: 1.28 min
Pressure Units : psi

[Inlet B Flow Settings]

Column length : 30.00 m
Column diameter : 0.250 mm
Gas : He
Vacuum compensation : On
Pressure : 7.1 psi
Flow : 0.9 ml/min
Linear velocity : 33.9 cm/sec
Split flow : 1 ml/min
Split ratio : 1.2

[Auxiliary Channel C Information]

Comment:

Pressure Program:
Initial Pres. : 0.0 psi
Initial Time : 480.00 min

Level	Rate(psi/min)	Final Pres.(psi)	Final Time (min)

1 0
Total Program Time: 480.00 min

[Auxiliary Channel D Information]

Cor t:

Pressure Program:
Initial Pres. : 0.0 psi
Initial Time : 480.00 min

Level Rate(psi/min) Final Pres.(psi) Final Time (min)
1 0
Total Program Time: 480.00 min

[Auxiliary Channel E Information]

Comment:

Pressure Program:
Initial Pres. : 0.0 psi
Initial Time : 480.00 min

Level Rate(psi/min) Final Pres.(psi) Final Time (min)
1 0
Total Program Time: 480.00 min

[Auxiliary Channel F Information]

Comment:

Pressure Program:
Initial Pres. : 0.0 psi
Initial Time : 480.00 min

Level Rate(psi/min) Final Pres.(psi) Final Time (min)
1 0
Total Program Time: 480.00 min

GC Temperature Information
-- ---------- ----------

[GC Zone Temperatures]

Inj. A : 250 C Off
Inj. B : 275 C
Det. A : 50 C Off
Det. B : 300 C
Aux. : 280 C Off

[Oven Parameters]

Oven Equib Time : 0.20 min
Oven Max : 325 C
Oven : On
Cryo : Off
Ambient : 25 C
Cryo Blast : Off

[O Program]

Initial Temp. : 60 C
Initial Time : 2.00 min

Level	Rate (C/min)	Final Temp. (C)	Final Time (min)
1	35.00	130	0.00
2	12.00	325	3.75
3	0.00		

Next Run Time : 24.00 min

Injector Information
--- ---

Injection Source : Auto
Injection Location : Front

Sample Washes : 1
Sample Pumps : 4
Sample Volume : 1 stop(s)
Viscosity Delay : 1 sec
Solvent A Washes : 4
Solvent B Washes : 2
On Column : No

[Purge Information]

Purge A/B	Init. Value	On Time	Off Time
A	On	0.15	0.00
B	On	0.15	0.00

END OF ACQUISITION PARAMETERS

DATA ANALYSIS PARAMETERS

Method Name: C:\HPCHEM\1\METHODS\SV1NB.M

Percent Report Settings

Sort By: Signal

Output Destination
Screen: Yes
Printer: No
File: No

Integration Events: Meth Default

Generate Report During Run Method: No

Signal Correlation Window: 0.020

Qualitative Report Settings

Peak Location of Unknown: Apex

Library to Search	Minimum Quality
C:\DATABASE\NBS75K.L	0
C:\DATABASE\PAH.L	0

Integration Events: Meth Default

Report Type: Summary

Output Destination
    Screen: No
    Printer: Yes
    File: No

Generate Report During Run Method: No

Quantitative Report Settings

Report Type: Detailed

Output Destination
    Screen: No
    Printer: Yes
    File: No

Generate Report During Run Method: No

ELEMENT ID: 0603035(SOIL) 0603036(AQUEOUS)
Calibration Last Updated: Fri Apr 07 09:13:18 2006

Reference Window: 5.00 Percent
Non-Reference Window: 5.00 Percent
Correlation Window: 0.03 minutes
Default Multiplier: 1.00
Default Sample Concentration: 0.00

Compound Information

---

1) 1,4-Dichlorobenzene-d4 (ISTD)

Ret. Time 3.86 min., Extract & Integrate from 3.36 to 4.36 min.

Signal		Rel Resp.	Pct. Unc.(abs)	Integration
Tgt	152.00			*** METH DEFAULT ***
Q1	115.00	58.70	30.0	*** METH DEFAULT ***
Q2	150.00	289.20	30.0	*** METH DEFAULT ***

Lvl	ID	Conc (ng/uL)	Response
5		40.000	442167
10		40.000	372682
50		40.000	381573
80		40.000	339990
120		40.000	337070
160		40.000	306591
200		40.000	356509
25		40.000	437292
CC		40.000	499862

Qualifier Peak Analysis ON ISTD conc: 40.000 ng/uL
Curve Fit: Avg. RF

---

2) N-Nitrosodimethylamine ( )

Ret. Time 0.85 min., Extract & Integrate from 0.35 to 1.35 min.

Sig		Rel Resp.	Pct. Unc.(abs)	Integration
Tg	74.05			*** METH DEFAULT ***
Q1	42.10	53.30	30.0	*** METH DEFAULT ***

Lvl	ID	Conc (ng/uL)	Response

TOPLEVEL PARAMETERS

ethod Information For: C:\HPCHEM\1\METHODS\SV2KC.M

ethod Sections To Run:

Appendix C

( ) ave Copy of Method With Data
( ) Pre-Run Cmd/Macro =
(X) Data Acquisition
( ) Data Analysis
( ) Post-Run Cmd/Macro =

ethod Comments:
8270

END OF TOPLEVEL PARAMETERS

INSTRUMENT CONTROL PARAMETERS (MS2)

ample Inlet: GC
njection Source: GC ALS
lass Spectrometer: Enabled

7673 Injector

( ) ront Injector:
lo parameters specified

Back Injector:

Sample Washes	2
Sample Pumps	2
Injection Volume	1.0 microliters
Syringe Size	10.0 microliters
On Column	Off
Nanoliter Adapter	Off
PostInj Solvent A Washes	2
PostInj Solvent B Washes	2
Viscosity Delay	1 seconds
Plunger Speed	Fast

HP5890 Temperature Parameters

Zone Temperatures:	State	Setpoint
Inlet A:	Off	50 C
Inlet B:	On	275 C
Detector A:	Off	50 C
Detector B:	On	300 C
Auxiliary:	Off	50 C

Oven Parameters:

Oven Equib Time:	0.10 minutes
Oven Max:	350 C
( )en State:	On
Cryo State:	Off
Cryo Blast:	Off
Ambient:	25 C

ven Program:
Initial Temperature: 60 C
Initial Time: 1.00 minutes

Level	Rate (C/minute)	Final Temperature (C)	Final Time (minutes)
1	35.0	130	0.00
2(A)	12.0	325	4.75
3(B)	0.0	50	1.00

Next Run Time: 24.00 minutes

HP5890 Inlet Pressure Programs

C Pressure Units: psi

nlet A:
Constant Flow: Off
Constant Flow Pressure: 0.0 psi
Constant Flow Temperature: 50 C
Initial Pressure: 0.0 psi
Initial Time: 650.00 minutes

Level	Rate (psi/minute)	Final Pressure (psi)	Final Time (minutes)
1	0.00	0.0	0.00
2(A)	0.00	0.0	0.00
3(B)	0.00	0.0	0.00

Total Program Time: 650.00 minutes

Column Length: 30.00 m
Column Diameter: 0.530 mm
Gas: He
Vacuum Compensation: Off

nlet B:
Constant Flow: Off
Constant Flow Pressure: 0.0 psi
Constant Flow Temperature: 50 C
Initial Pressure: 7.0 psi
Initial Time: 0.00 minutes

Level	Rate (psi/minute)	Final Pressure (psi)	Final Time (minutes)
1	99.00	36.0	0.50
2(A)	99.00	7.0	0.00
3(B)	0.00	0.0	0.00

Total Program Time: 1.09 minutes

Column Length: 30.00 m
Column Diameter: 0.250 mm
Gas: He
Vacuum Compensation: On

HP5890 Packed Column Flow Control

nlet A not used to control packed column flow.

nlet B not used to control packed column flow.

HP5890 Purge Valve Settings

nlet Purge Init Value On Time Off Time Splitless Injection

DATA ANALYSIS PARAMETERS

ethod Name: C:\HPCHEM\1\METHODS\PAH2DR.M

ercent Report Settings

ort By: Signal

itput Destination
Screen: No
Printer: Yes
File: No

ntegration Events: Meth Default

enerate Report During Run Method: No

ignal Correlation Window: 0.020

ualitative Report Settings

eak Location of Unknown: Apex

ib[illegible]y to Search | Minimum Quality
os75k.L | 0

ntegration Events: Meth Default

eport Type: Summary

utput Destination
Screen: Yes
Printer: No
File: No

enerate Report During Run Method: No

uantitative Report Settings

eport Type: Summary

utput Destination
Screen: Yes
Printer: Yes
File: No

enerate Report During Run Method: No

L PAH ELEMENT ID 0604005
alibration Last Updated: Thu Apr 06 15:54:57 2006

eference Window: 0.50 Minutes
n-Reference Window: 0.50 Minutes
orrelation Window: 0.02 minutes
efault Multiplier: 1.00
efault Sample Concentration: 0.00

omp nd Information

---

1) 1,4-Dichlorobenzene-d4 (ISTD TR)

et. Time 4.21 min., Extract & Integrate from 4.06 to 4.36 min.

ignal	Rel Resp.	Pct. Unc.(rel)	Integration
gt 152.00			*** METH DEFAULT ***
1 115.00	51.80	30.0	*** METH DEFAULT ***
2 150.00	153.70	30.0	*** METH DEFAULT ***

vl ID	Conc (ng/uL)	Response
.2	2.000	5361
.4	2.000	5216
.0	2.000	4812
.0	2.000	10368
.0	2.000	5671
.0	2.000	5719
C	2.000	6400
.1	2.000	5740

ualifier Peak Analysis ON ISTD conc: 2.000 ng/uL
urve Fit: Avg. RF

---

2) 1,2 Dichlorobenzene-d4(SURR) ( )

et ime 4.41 min., Extract & Integrate from 3.91 to 4.91 min.

ignal	Rel Resp.	Pct. Unc.(rel)	Integration
gt 152.00			*** METH DEFAULT ***
1 150.00	173.80	30.0	*** METH DEFAULT ***

vl ID	Conc (ng/uL)	Response
.2	0.200	588
.4	0.400	1046
.0	1.000	2405
.0	2.000	10416
.0	5.000	13918
.0	8.000	23368
C	1.000	-1
.1	0.100	384

ualifier Peak Analysis ON
urve Fit: Avg. RF

---

3) Naphthalene-d8 (ISTD TR)

et. Time 5.67 min., Extract & Integrate from 5.52 to 5.82 min.

ignal	Rel Resp.	Pct. Unc.(rel)	Integration
gt 136.00			*** METH DEFAULT ***
1 68.00	7.10	30.0	*** METH DEFAULT ***

vl	Conc (ng/uL)	Response
.2	2.000	13794
.4	2.000	14266
.0	2.000	13382

SVOA

ESS LABORATORY MS5 RUN LOG

Appendix D

DATE	6/25/2014	**Work orders reported:**	
ANALYST	IBM		

METHOD	SV5CV	**MATRIX**	**SEQ ID**	**CAL ID**
Internal Std:	4E06161	SOIL	CXF0327	1406003
[redacted]ethod:	DFTPP	AQ		1406004
METHOD (2)	SV5CV	**MATRIX**	**SEQ ID**	**CAL ID**
Internal Std:	4E06161	SOIL	CXF0333	1406003
Tune Method:	DFTPP	AQ	CXF0352	1406004

VIAL #	SAMPLE ID	METHOD	FILE ID	M	STD ID/COMMENTS	BATCH ID	MATRIX	RW	RPT	IMP	BY
1	CXF0327-TUN1	DFTPP	SV549316	1	4F03143			IBM	X		
2	CXF0327-CCV1	SV5A	SV549317	1	4F23093			IBM	X		
3	1406538-01	SV5A	SV549318	1	0.05/0.5,0.05/0.5=100X	CF42313	S	IBM	X	X	
4	1406538-02	SV5A	SV549319	1	0.05/0.5,0.05/0.5=100X	CF42313	S	IBM	X	X	
5	1406538-03	SV5A	SV549320	1	0.05/0.5,0.05/0.5=100X	CF42313	S	IBM	X	X	
6	1406538-06	SV5A	SV549321	1	0.05/0.5,0.05/0.5=100X	CF42313	S	IBM	X	X	
IDLE											
1	CXF0333-TUN1	DFTPP	SV549322	1	4F03143			IBM	X		
2	CXF0333-CCV1	SV5A	SV549323	1	4F23093			IBM	X		
3	CF42420-BLK1	SV5A	SV549324	1		CF42420	A/S	IBM	X		
4	CF42420-BS1	SV5A	SV549325	1		CF42420	A/S	IBM	X		
5	CF42420-BSD1	SV5A	SV549326	1		CF42420	A/S	IBM	X		
6	CF42424-BLK2	SV5A	SV549327	1	TCLP	CF42424	S	IBM	X	X	
7	1406522-01	SV5A	SV549328	1	TCLP	CF42424	S	IBM	X	X	
8	CF42424-MS1	SV5A	SV549329	1	TCLP	CF42424	S	IBM	X	X	
9	1406519-01	SV5A	SV549330	1		CF42420	A	IBM	X	X	
10	CF42517-BLK1	SV5A	SV549331	1		CF42517	S	IBM	X		
11	CF42517-BS1	SV5A	SV549332	1		CF42517	S	IBM	X		
12	CF42517-BSD1	SV5A	SV549333	1		CF42517	S	IBM	X		
13	CF42420-MS1	SV5A	SV549334	1		CF42420	A	IBM	X	X	
14	1406519-02	SV5A	SV549335	1		CF42420	A	IBM	X	X	
15	1406519-03	SV5A	SV549336	1		CF42420	A	IBM	X	X	
16	1406519-04	SV5A	SV549337	1		CF42420	A	IBM	X	X	
17	1406519-05	SV5A	SV549338	1		CF42420	A	IBM	X	X	
18	1406538-07	SV5A	SV549339	1		CF42517	S	IBM	X	X	
19	1406582-01	SV5A	SV549340	1		CF42517	S	IBM	X	X	
20	CF42517-MS1	SV5A	SV549341	1		CF42517	S	IBM	X	X	
21	CF42517-MSD1	SV5A	SV549342	1		CF42517	S	IBM	X	X	

MASTER

QUADS:	**BENZ ACID, 24-DNP, PCP**
SCV:	**HCCPD 68%, BENZIDINE 50%**
CCAL0327:	**NNDMA 60%, PYRIDINE 67%, HCCPD 78%**
CCAL0333:	**NNDMA 61%, PYRIDINE 70%, HCCPD 75%, BENZIDINE 75%**
Comments:	

Review (includes a check and review of manual integrations)

ESS LABORATORY
INSTRUMENT MAINTENANCE LOGBOOK

START DATE: 05/30/2012
REVIEWED BY / DATE:

DATE	INSTRUMENT	REASON FOR MAINTENANCE	SERVICE PERFORMED	COMMENTS	INIT.

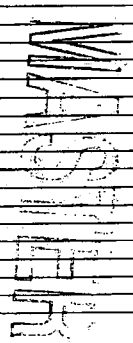

Quality Control Requirement	Data Quality Objective	Performance Standard	Routine Analytical Services (RAS) Option	Required Corrective Action	Reporting Requirement
Initial Demonstration of Proficiency	Laboratory Analytical Accuracy & Precision	(1) Must be performed prior to using method on samples. (2) Must be performed for each matrix. (3) Must contain all target analytes. (4) Must follow procedure in Section 8.4 of SW-846 8000B.	No	NA	Refer to Section 8.4 of SW-846 8000B and Section 1.1.2 of this protocol.	NA
GC/MS Tunes with DFTPP	Inter-laboratory Consistency & Comparability	(1) Criteria for DFTPP listed in Table 3 of SW-846 8270D (the same criteria must be used for all analyses). (2) Every 12 hours prior to sample analysis. (3) DDT breakdown must be evaluated and must be <20%. (4) Pentachlorophenol and benzidine peak tailing must be evaluated. Peak tailing factor must be <2 for benzidine and pentachlorophenol. NOTE: Pentachlorophenol tailing must be evaluated when analyzing for acid SVOCs and benzidine tailing must be evaluated when analyzing for base-neutral SVOCs. NOTE: Tune must be performed in full scan mode for SIM analyses.	No	NA	Perform instrument/injection port maintenance as necessary; retune instrument.	Suspend all analyses until tuning non-compliance is rectified. Report DDT breakdown and peak tailing factor exceedances in laboratory narrative.
Initial Calibration	Laboratory Analytical Accuracy	(1) Must be analyzed at least once prior to analyzing samples, when initial calibration verification or continuing calibration does not meet the performance standards, and when major instrument maintenance is performed. (2) Minimum of 5 standards (or 6 if non-linear regression used).	No	RF <0.05; affects nondetect results for affected analyte in all samples analyzed under this initial calibration.	(1) Recalibrate if >10% of target analytes exceed %RSD, "r", or "r^2" criteria. (2) If ≤10% of compounds exceed criteria, recalibration is not required as long as %RSD <40, r >0.98, or r^2 >0.98. (3) If recalculated	Sample analysis cannot proceed without a valid initial calibration. Report non-conforming compounds (%RSD >20, r <0.99, r^2 <0.99 or minimum RF not met) in laboratory narrative. If non-linear regression

		(3) Low standard must be ≤RL. (4) %RSD ≤20, r ≥0.99 (linear regression), or r^2 ≥0.99 (non-linear regression) for each target analyte. (5) If %RSD >20, linear or non-linear regression must be used. (6) Minimum RFs as per Table 4 of SW-846 8270D for lowest concentration standard and for average RF. (7) Must contain all target analytes. (8) Calibration must be performed under the same conditions as the samples. (9) If linear or non-linear regression used, verify the RL by recalculating concentrations in lowest calibration standard using the final calibration curve; recoveries must be 70-130%. (10) SIM: Laboratory must monitor a minimum of two ions per analyte (the primary ion or quantitation ion and a minimum of one confirmation ion); this is required for all target analytes, surrogates and internal standards.			concentrations from the lowest calibration standard are outside of 70-130% recovery range, either: * The RL limit must be reported as an estimated value[2], or * The RL must be raised to the concentration of the next highest calibration standard that exhibits acceptable recoveries when recalculated using the final calibration curve.	(i.e., quadratic equation) is used for calibration, this must be noted in the laboratory narrative along with the compounds affected.
Initial Calibration Verification	Laboratory Analytical Accuracy	(1) Immediately after each initial calibration. (2) Concentration level near midpoint of curve. (3) Prepared using standard source different than used for initial calibration. (4) Must contain all target analytes. (5) Percent recoveries must be between 70-130% for target analytes except for "difficult" analytes[**] which must	No	NA	Locate source of problem; recalibrate if >10% of all analytes are outside of criteria.	If recovery is outside of 70-130% for any analyte, including "difficult" analytes[**], report non-conforming compounds in laboratory narrative.

Table II B-1: Specific QC Requirements and Performance Standards for SVOCs (SW-846 8270D) Using WSC-CAM-IIB

Required Quality Control Element	Quality Control Objective	Required Performance Standard	Required Deliverable	Rejection Criteria per WSC-07-350	Bidding Corrective Action	Required Analytical Response Action
		exhibit percent recoveries between 40-160%.				
Continuing Calibration	Laboratory Analytical Accuracy	(1) Every 12 hours prior to the analysis of samples. (2) Concentration level near midpoint of curve. (3) Must contain all target analytes. (4) %D must be ≤20 for each target analyte. (5) Minimum RFs as per Table 4 of SW-846 8270D. (6) Area counts of internal standards in continuing calibration must be between 50 – 200% of the area counts in the associated mid-level initial calibration standard.	No	RF <0.05; affects nondetect results for affected analyte in all samples analyzed under this continuing calibration.	(1) Recalibrate if >20% of all target analytes or >15% of analytes from a particular class (base-neutral or acid) exceed %D criteria. (2) If internal standard is outside of criteria, locate source of problem and reanalyze the continuing calibration. (3) If ≤20% of compounds exceed criteria, recalibration is not required as long as %D <40.	Report non-conforming compounds (%D >20 or minimum RF not met) and associated samples in laboratory narrative.
Method Blank	Laboratory Method Sensitivity (contamination evaluation)	(1) Extracted with every batch or every 20 samples, whichever is more frequent. (2) Matrix-specific (e.g., water, soil). (3) Target analytes must be <RL except for common laboratory contaminants (phthalates) which must be <5x the RL.	Yes	NA	(1) If concentration of contaminant in sample is <10x concentration in blank, locate source of contamination; correct problem; reextract and reanalyze method blank and associated samples. (2) No corrective action required if concentration of contaminant in sample is >10x concentration in blank or if contaminant not detected in sample.	(1) If sample re-extraction is not possible, report non-conformance in laboratory narrative. (2) If contamination of method blanks is suspected or present, the laboratory, using a "B" or some other convention, should qualify the sample results. Blank contamination should also be documented in the laboratory narrative. (3) If re-extraction is performed within holding

						time and yields acceptable method blank results, the laboratory may report results of the re-extraction only. (4) If re-extraction is performed outside of holding time, the laboratory must report results of both the initial extraction and re-extraction.
Laboratory Control Sample (LCS)	Laboratory Analytical Accuracy	(1) Extracted with every batch or every 20 samples, whichever is more frequent. (2) Concentration level near midpoint of curve. (3) Must contain all target analytes. (4) Matrix-specific (e.g., water, soil). (5) Percent recoveries must be between 40-140% for the base-neutral compounds and between 30-130% for the acid compounds except for "difficult" analytes(**) which must exhibit percent recoveries between 15-140% (6) Must be prepared in a water-miscible solvent (e.g., acetone, methanol).	Yes	Recovery <10%; affects nondetect results for affected analyte in all samples extracted with this LCS.	(1) Locate source of problem; re-extract and re-analyze LCS and associated samples if >10% of all analytes are outside of criteria. (2) If ≤10% of compounds are outside of the acceptance criteria, re-extraction is not required as long as recoveries are >10%. (3) If >10% of compounds are above the acceptance criteria (>140% for base-neutral compounds and >130% for acid compounds), reextraction is not required if affected compounds were not detected in associated samples.	(1) If sample re-extraction is not possible, report non-conformance in laboratory narrative. (2) If recovery is outside of 40-140% for any base-neutral compound or 30-130% for any acid compound, including "difficult" analytes(**), report non-conforming compounds in laboratory narrative. (3) If re-extraction is performed within holding time and yields acceptable LCS results, the laboratory may report results of the re-extraction only. (4) If re-extraction is performed outside of

						holding time, the laboratory must report results of both the initial extraction and re-extraction.
LCS Duplicate	Laboratory Analytical Accuracy & Precision	(1) Extracted with every batch or every 20 samples, whichever is more frequent. (2) Concentration level near midpoint of curve. (3) Must contain all target analytes. (4) Matrix-specific (e.g., water, soil). (5) Percent recoveries must be between 40-140% for the base-neutral compounds and between 30-130% for the acid compounds except for "difficult" analytes(**) which must exhibit percent recoveries between 15-140%. (6) RPDs must be ≤20 for waters and ≤30 for solids. (7) Must be prepared in a water-miscible solvent (e.g., acetone, methanol).	Yes	Recovery <10%; affects nondetect results for affected analyte in all samples extracted with this LCS.	(1) Locate source of problem; re-extract and re-analyze LCS and associated samples if >10% of all analytes are outside of recovery acceptance criteria. (2) If ≤10% of compounds are outside of the recovery acceptance criteria, re-extraction is not required as long as recoveries are >10%. (3) If >10% of compounds are above the recovery acceptance criteria (>140% for base-neutral compounds and >130% for acid compounds), reextraction is not required if affected compounds were not detected in associated samples.	(1) If sample re-extraction is not possible, report non-conformance in laboratory narrative. (2) If recovery is outside of 40-140% for any base-neutral compound or 30-130% for any acid compound, including "difficult" analytes(**) or if RPD is outside of criteria, report non-conforming compounds in laboratory narrative. (3) If re-extraction is performed within holding time and yields acceptable LCS results, the laboratory may report results of the re-extraction only. (4) If re-extraction is performed outside of holding time, the laboratory must report results of both the initial extraction and re-extraction.

Table [illegible] Specific QC Requirements and Performance Standards for SVOCs (SW-846 8270D) Using WSC-CAM-II B

[illegible]	[illegible]	[illegible]	[illegible]	[illegible]	[illegible]	[illegible]
MS/MSD	Method Accuracy & Precision in Sample Matrix	(1) Every 20 samples (at discretion of laboratory or at request of data user). (2) Matrix-specific. (3) Concentration level near midpoint of curve. (4) Must contain all target analytes. (5) Percent recoveries between 40 -140% for the base-neutral compounds and between 30-130% for the acid compounds. (6) RPDs ≤20 for waters and ≤30 for solids. (7) Must be prepared in a water-miscible solvent (e.g., acetone, methanol).	Yes ONLY when requested by the data user	Recovery <10%; affects nondetect result for affected analyte in unspiked sample only.	Check LCS; if recoveries are acceptable in LCS, narrate non-conformance.	Note exceedances in laboratory narrative.
Surrogates	Method Accuracy in Sample Matrix	(1) Minimum of 3 base-neutral surrogates and 3 acid surrogates, at retention times across GC run. Recommended base-neutral surrogates: nitrobenzene-d5, 2-fluorobiphenyl, terphenyl-d14 Recommended acid surrogates: phenol-d5, 2-fluorophenol, 2,4,6-tribromophenol NOTE: For SIM analyses, surrogates used must be representative of compound class of target analytes (e.g., use base-neutral surrogates if analyzing for PAHs and use acid surrogates if analyzing for pentachlorophenol). (2) Percent recoveries in solid matrices must be between 30-130% for all surrogates. Percent recoveries in water matrices must be between 30-130% for base-neutral surrogates and 15-110% for acid surrogates.	Yes	Recovery <10%; affects all nondetect SVOC results associated with the surrogate compound class (base-neutral or acid) in affected sample.	If two or more surrogates for any one class (base-neutral or acid) are outside of limits or if any one surrogate recovers at <10%: (1) Re-extract the sample if surrogate recoveries are low. (2) Re-extract the sample if surrogate recoveries are high and associated SVOCs were detected in the sample. Re-extraction is not required if one of the following exceptions applies: (a) If surrogate recoveries are high and target	(1) Report recoveries outside of acceptance limits in laboratory narrative. (2) If re-extraction yields similar surrogate non-conformances, the laboratory must report results of both extractions. (3) If re-extraction is performed within holding time and yields acceptable surrogate recoveries, the laboratory may report results of the re-extraction only. (4) If re-extraction is performed outside of the

Table II B-1: Specific QC Requirements and Performance Standards for SVOCs (SW-846 8270D) Using WSC-CAM-II B

[illegible]	[illegible]	[illegible]	[illegible]	[illegible]	[illegible]	[illegible]
					analytes are not detected in sample, re-extraction is not required. (b) Re-extraction is not required if obvious interference present (e.g., UCM). If obvious interference is present and surrogate recovery would cause rejection of data (i.e., <10%), re-analyze sample on dilution. (c) If a surrogate is diluted to a concentration below that of the lowest calibration standard, reextraction and/or reanalysis is not required.	holding time and yields acceptable surrogate recoveries, the laboratory must report results of both extractions. (5) If sample is not re-extracted due to obvious interference, the laboratory must provide the chromatogram in the data report.
Internal Standards	Laboratory Analytical Accuracy and Method Accuracy in Sample Matrix	(1) Minimum of 6 at retention times across GC run. NOTE: For SIM analyses, the number of internal standards used will be dependent on the analytes of interest. Internal standards must elute in close proximity to the analytes of interest. (2) Area counts in samples must be between 50 – 200% of the area counts in the associated continuing calibration standard. (3) Retention times of internal standards must be within ±30 seconds of retention times in associated continuing calibration standard.	No	Recovery <20%; affects all nondetect results quantitated using affected internal standard in associated sample.	If one or more internal standards are outside of limits, reanalyze sample unless obvious interference present (e.g., UCM). NOTE: If obvious interference is present and internal standard area would cause rejection of data (i.e., <20%), reanalyze sample on dilution.	(1) Report nonconformances in laboratory narrative. Include actual recovery of internal standard and provide summary of analytes quantitated using the internal standard. (2) If reanalysis yields similar internal standard non-conformances, the laboratory must report results of both analyses. (3) If reanalysis is performed within holding

Table II B-1 - Specific QC Requirements and Performance Standards for SVOC (SW-846 8270D) Using WSC-CAM II B

						time and yields acceptable internal standard recoveries, the laboratory may report results of the reanalysis only. (4) If reanalysis is performed outside of the holding time and yields acceptable internal standard recoveries, the laboratory must report results of both analyses. (5) If sample is not reanalyzed due to obvious interference, the laboratory must provide the chromatogram in the data report.
Quantitation	NA	(1) Quantitation must be based on internal standard calibration. (2) The laboratory must use the average response factor, linear or non-linear regression curve generated from the associated initial calibration for quantitation of each analyte. (3) The internal standard used for quantitation must be the one nearest the retention time of the subject analyte. (4) Results must be reported with 2 or more "significant figures" if ≥RL. If reporting values below the RL, report with 1 or more "significant figures".[3]	NA	NA	NA	NA

Table II B-3 Specific QC Requirements and Performance Standards for SVOC by SW-846 8270D Rev 4 WSC-CAM II B

Identification	NA	Refer to SW-846 8270D, Section 11.6.	NA	NA	NA	NA
General Reporting Issues	NA	(1) The laboratory must only report values ≥ the sample-specific reporting limit; optionally, values below the sample-specific reporting limit can be reported as estimated, if requested. The laboratory must report results for samples and blanks in a consistent manner. (2) Dilutions: If diluted and undiluted analyses are performed, the laboratory should report results for the lowest dilution within the valid calibration range for each analyte. The associated QC (e.g., method blanks, surrogates, etc.) for each analysis must be reported. (3) Refer to Section 3.3, TICs by GC/MS, for guidance. (4) Results for soils/sediments must be reported on a dry-weight basis for comparison to MCP regulatory standards. (5) Refer to Appendix II B-1 for chain-of-custody requirements regarding preservation, cooler temperature, and holding times.	NA	NA	NA	(1) Qualification of the data is required if reporting values below the sample-specific reporting limit. (2) Complete analytical documentation for diluted and undiluted analyses must be made available for review during an audit. (3) TICs will be evaluated at the discretion of the data user consistent with the guidelines presented in Appendix II B-3. (4) The performance of dilutions must be documented in the laboratory narrative or on the report form. Unless due to elevated concentrations of target compounds, reasons for dilutions must be explained in the laboratory narrative. (5) If samples are not preserved properly or are not received with an acceptable cooler temperature, note the non-conformances in the

Table II.B.2 Specific QC Requirements and Performance Standards for SVOC (SW-846 8270D) Using WSC-CAM II B

						laboratory narrative. (6) If samples are extracted and/or analyzed outside of the holding time, note the non-conformances in the laboratory narrative.

** Potentially "difficult" analytes include: 4-chloroaniline, 4-nitrophenol, phenol, 2,4-dinitrophenol

[1] As per Appendix IV of MassDEP Policy #WSC-07-350, *MCP Representativeness Evaluations and Data Usability Assessments*, September 2007, if these results are observed, data users should consider nondetect results as unusable and positive results as estimated with a significant low bias.

[2] If the RL is estimated due to unacceptable recovery of the lowest standard, the CAM RL has not been achieved; Question G of the "MassDEP MCP Analytical Protocol Certification Form" must be answered "NO" and this must be addressed in the laboratory narrative.

[3] Reporting protocol for "significant figures" is a policy decision included for standardization and consistency for reporting of results and is not a definition of "significant" in the scientific or mathematical sense.

CPSC Phthalate Analysis:

Application: Samples that are prepared and extracted according to the SOP 50_CPSC_Phthalates are analyzed using this procedure. This procedure describes standards, instrument operating conditions, calculations and reporting.

Standards:

Internal Standard: Acenaphthene-D10 (Purchased fro Sigma Aldrich at 200ppm) 10ul of this standard is added to all samples and standards (10 ul for every ml) for a final concentration of 2ppm.

Dibutyl Phthalate ($C_{16}H_{22}O_4$, DBP), Single Component, CAS No. 84-74-2. Analytical grade

Di-(2-ethylhexyl) phthalate ($C_{24}H_{38}O_4$, DEHP), Single Component, CAS No. 117-81-7. Analytical grade

Benzyl Butyl Phthalate ($C_{19}H_{20}O_4$, BBP), Single Component, CAS No. 85-68-7. Analytical grade

Di-n-octyl phthalate ($C_{24}H_{38}O_4$, DnOP), Single Component , CAS No. 117-84-0. Analytical grade

Diisononyl phthalate ($C_{26}H_{42}O_4$, DINP), Multi Component, CAS No. 28553-12-0/68515-48-0. Analytical grade

Diisodecyl phthalate ($C_{28}H_{46}O_4$, DIDP), Multi Component , CAS No. 26761-40-0/68515-49-1. Analytical grade

Calibration standards are prepared as follows:

Single component analytes: These analytes are in the 8270 Low Level Stock solution at 20ppm. Serial dilutions are made for the calibration standards at comcentrations of 0.05, 0.1,0.5, 1.0, 2.0, and 5.0ppm.

Multi Component analytes. A separate standard is prepared for each multi-component analyte at 10,000ppm(0.5g/50mls). These are diluted to create calibration standards at 1,5,10,50 and 100ppm.

Blank Spikes: Prepared by adding 0.5mls of the SVOA MS spiking solution. At a final volume of 50ml this will produce on column concentrations at 1ppm.

CRM (Certified Reference Material) : Use the second source standard from the SVOA 8270 method. Diluted the 20ppm stock standard (1:20) for the 1ppm CRM standard. Add the appropriate amount of IS.

GC-MS Operating Procedures and Quality Control Measures
A GC-MS system with an automatic injector is suggested for the sample analysis.

The following GC conditions are used (Table 1):

Table 1. GC Conditions Column	HP-5MS; 30m x .22 mm ID x 0.25 µm
Initial Flow Mode	1 ml/min, constant flow (He gas)
Injection Mode	Pulsed splitless
Injection Amount	1 µl
Injection Port Temp	275° C
Pulse Pressure & Time	35 psi, 0.5 min
Purge Flow & Time	20 ml/min, 2 min
Solvent Delay	5 minutes
Initial Oven Temp, Hold Time	50° C, 1 min
Ramp Temp 1, Plateau	30° C/min, 280° C
Ramp Temp 2, Plateau	15° C/min, 310° C
Final Hold Time	4 minutes

Samples are analyzed using the Select Ion Monitoring (SIM) program listed in Table 2. Scan for corresponding ions of each compound listed in a particular stage (e.g., set SIM Stage 3 to scan for 149, 167, 261, 279, 293, and 307 *m/z*). Note that retention times and optimal *m/z* scan values may differ between instruments. For many instruments it will be possible to program the detector to scan for the various ions in the different stages within a single run.

Table 2. SIM Settings **Retention Time (min)**	**Corresponding Ions (*m/z*)**	
Scan Stage 1:	*5 - 9.5 minutes*	
Acenaphthene-D10 (Internal Standard)	7.93 – 7.99	**188**
DBP	8.52 – 8.57	**149**, *167, 205, 223*
Scan Stage 2:	*9.5 - 10.8 minutes*	
BBP	9.84 – 9.93	*91.1*, ***149***, *206*
DEHP	10.42 – 10.49	***149***, *167, 279*
Scan Stage 3:	*10.8 – End*	
DnOP	11.15 – 11.24	***149***, *167, 261, 279*
DINP	10.90 – 12.1	***149***, *167, 293*
DIDP	11.20 – 13.00	***149***, *167, 307*

Analysis

1. Prepare at least four calibration standards for each of the six phthalates of interest (in the range of 0.5 to 10 µg/ml), along with one calibration blank (methylene chloride). Each calibration standard should have an internal standard concentration of 2 µg/ml.
2. Prior to analysis run the 8270 TUNE standard. Spectral ratios must be within criteria to ensure the MS is functioning properly.
3. Analyze standards and blank with the GC-MS. Qualitatively analyze the results to ensure proper retention times and no contamination.
4. Integrate the peak area from valley to valley (the time range listed in Table 2) for each standard. Compounds scanned in Stages 1 ,2 and 3 are integrated using their quantitative ions (in **bold**).
5. Construct a calibration curve from normalized phthalate signals. Normalization is performed by dividing the integrated phthalate signal area by the integrated internal standard signal area.
6. Analyze a CRM to ensure a proper calibration. The analyzed value should be within ±10% of the expected value. If not, prepare new standards and re-run calibration.
7. Analyze the QC standards and all samples. Analyze a CRM if time has passed since the last calibration check. Add the appropriate amount of IS to samples and QC.
8. Quantitate results. If the results are out of the calibration range, return to step 5 of the phthalate extraction method (perform another dilution to get results in calibration range).

Calculations and Results

Results can be reported as follows:

Percentage [Phthalate] = % Phthalate (w/w) = [(C x V x D) / (W x 1000)] x 100

Where

C = Concentration of phthalate in GC-MS sample (in µg/ml)

V = Total volume of THF and hexanes added from steps 2 and 3 of phthalate extraction method

D = Dilution factor from step 5 of phthalate extraction method

W = Weight of sample collected (in mg)

Repeat calculation for each phthalate present in sample

1,4-Dioxane Analysis using Isotope Dilution

Application: Samples are prepared and extracted in accordance with SW-846 methods 3510 or 3520 and analyzed using modified SW-846 method 8270 GC/MS-SIM. 1,4-Dioxane-d8 is added to the samples prior to extraction. This isotopically labeled compound functions both as internal standard and as surrogate for the analyte of interest and serves to correct the variability associated with extraction of the target analyte using the specified extraction procedure. Macro preparation methods cited above may be adjusted for micro quantities per SW846 Chapter Two providing QC acceptance criteria are met.

Standards:

Internal Standard / Surrogate: 1,4-Dioxane-d8 (purchased from Absolute Standards, Cat. # 92785, @10,000 ppm), diluted to 1000 ppm in DCM.

Procedure:

GC-MS Operating Procedures and Quality Control Measures
A GC-MS system with an automatic injector is suggested for the sample analysis.
The following GC conditions are used (Table 1):

Table 1. GC Conditions Column	HP-5MS; 30m x .22 mm ID x 0.25 µm
Initial Flow Mode	1 ml/min, constant flow (He gas)
Injection Mode	Pulsed splitless
Injection Amount	1 µl
Injection Port Temp	275° C
Pulse Pressure & Time	35 psi, 0.5 min
Purge Flow & Time	20 ml/min, 2 min
Solvent Delay	2 minutes
Initial Oven Temp, Hold Time	50° C, 1 min
Ramp Temp 1, Plateau	30° C/min, 280° C
Ramp Temp 2, Plateau	15° C/min, 310° C
Final Hold Time	4 minutes

Samples are analyzed using the Select Ion Monitoring (SIM) program listed in Table 2. Scan for corresponding ions of each compound listed in a particular stage (e.g., set SIM Stage 3 to scan for 149, 167, 261, 279, 293, and 307 *m/z*). Note that retention times and optimal *m/z* scan values may differ between instruments. For many instruments it will be possible to program the detector to scan for the various ions in the different stages within a single run.

Alternative Extraction Procedure: Micro-extraction by 3580A

35 mL of sample are placed into a 40 mL VOA vial and spiked with 17.5 uL of a 1000 ppm solution of 1,4 Dioxane-d8. For QC, use DI water. Spike blank spikes and matrix spike samples with 175 uL of a 100 ppm solution of 1,4-Dioxane in Acetone.

Add approximately 6 g of muffled Sodium Sulfate and exactly 3.5 mL of Methylene Chloride. Cap the vial tightly and shake vigorously for at least 2 minutes.
Centrifuge the samples first and then turn them upside down and let them settle for a few minutes (the centrifugation keeps the insoluble residue of Sodium Sulfate from caking together on the septum). Then, carefully remove 1.0 mL of the extract through the septum, using a syringe. Spike with regular 8270 IS solution at 20 ppm and analyze.

Appendix J: Method 522 solid phase extraction of 1,4-Dioxane

Equipment/Apparatus: Resprep 6ml EPA METHOD 521 cartridge catalogue #26032

Vacuum manifold with at least 6 positions for cartridges.

PTFE sample transfer tubing.

Vacuum pump with 1000-2000 ml water trap.

Amber Glass bottles for QC samples.

40ml sample vials, target vials.

O&G Glass funnels with glass wool and 3g or less anhydrous sodium sulfate.
Turbovap II concentration workstation: Concentration Tubes (Part# 45817) 200ml.

Procedure: Wet each cartridge bed using three solvents and the vacuum apparatus to pull solvents through each cartridge. Rinse with two cartridge volumes of Dichloromethane(DCM), then two volumes of Methanol, and finally two volumes DI water. Do not vacuum dry the cartridges, leave a small amount of DI water in the cartridge. Attach PTFE transfer tubing to the cartridges. Measure 500ml of DI water for each QC sample and 500ml of analytical sample into amber bottles. Spike the QC samples (Blank, Blank Spike, Blank Spike Dup) and samples with 2.5ul Dioxane surrogate. Spike 50ul Dioxane Matrix spike into appropriate samples.

Place the sample ends of the PTFE transfer tubes in the QC/Sample bottles. Turn on Vacuum pump to start extracting the samples. Empty the Vacuum pump water trap into the shake-out waste drum every so often to avoid sample water from getting into the pump. Once all the samples have been filtered through the cartridges, remove the transfer tubes from the cartridges and air dry using the vacuum for 1 minute. Remove any water from the manifold and use Kimtech wipes to dry the collection tips of the manifold. Label and place appropriate 40ml glass vials into their correct position in the vacuum manifold.

Add half the cartridge volume of DCM to each cartridge and allow the DCM to soak/elute. Once the DCM has eluted into the cartridge add another half volume of DCM. Briefly use the vacuum to initiate drop wise elution of the DCM (for less than 5 seconds). Add four more half volumes of DCM to each cartridge, for a total of three volumes (approximately 9 ml DCM). Use the vacuum pump to get the last of the DCM from the cartridges. Filter each sample through the O&G funnels into Turbovap concentration tubes and concentrate each sample to 0.5ml Final volume.

verification within acceptance criteria, then a new calibration is performed or acceptable performance is demonstrated after corrective action with two consecutive calibration verifications.

For any samples analyzed on a system with an unacceptable calibration, some results may be useable if qualified and under the following conditions:

a) If the acceptance criteria are exceeded high (high bias) and the associated samples are below detection, then those sample results that are non-detects may be reported as non-detects.

b) If the acceptance criteria are exceeded low (low bias) and there are samples that exceed the maximum regulatory limit, then those exceeding the regulatory limit may be reported.

MASTER

Attachment 3

Laboratory QA Manual

QUALITY MANUAL

of

ESS LABORATORY
Division of Thielsch Engineering, Inc.

185 Frances Ave.
Cranston, RI 02910

Telephone: 401-461-7181x3060

Website: www.esslaboratory.com

Name	Function (Unit)	Signatures	Date
Laurel Stoddard	Laboratory Director		12/9/16
Jim Badger	Quality Manager		12/8/16
Eric Baanante	Operations Manager		12/9/16
Eric Baanante	Technical Manager		12/9/16

Revision Number:	**13**	**Effective Date:**	**Jan 1st 2014**
Revision Number:	**14**	**Effective Date:**	**Jan 1st 2015**
Revision Number:	**15**	**Effective Date:**	**Jan 1st 2016**
Revision Number:	**16**	**Effective Date:**	**Jan 1st 2017**

Table of Contents

Section	Title	Page	Effective Date
1	**TITLE PAGE**	1-1	1-1-2017
2	**TABLE OF CONTENTS**	2-1	1-1-2017
	Table of Tables	2-5	
	Table of Figures	2-6	
3	**INTRODUCTION AND SCOPE**	3-1	1-1-2017
	3.1 Scope of Testing	3-1	
	3.2 Table of Contents, References and Appendices	3-1	
	3.3 Glossary and Acronyms Used	3-2	
	3.4 Management of the *Quality Manual*	3-3	
4	**ORGANIZATION**	4-1	1-1-2017
	4.1 Organization	4-2	
	4.2 Conflict of Interest and Undue Pressure	4-2	
5	**MANAGEMENT**	5-1	1-1-2017
	5.1 Management Requirements	5-1	
	5.2 Management Roles and Responsibilities	5-2	
	5.3 Quality Policy	5-6	
	5.4 Ethics and Data Integrity System	5-7	
	5.5 Documentation of Management System	5-7	
6	**DOCUMENT CONTROL**	6-1	1-1-2017
	6.1 Controlled Documents	6-1	
	6.2 Obsolete Documents	6-3	
7	**REVIEW OF REQUESTS, TENDERS AND CONTRACTS**	7-1	1-1-2017
	7.1 Procedure for the Review of Work Requests	7-1	
	7.2 Documentation of Review	7-2	
8	**SUBCONTRACTING OF ENVIRONMENTAL TESTS**	8-1	1-1-2017
	8.1 Procedure	8-1	
9	**PURCHASING SERVICES AND SUPPLIES**	9-1	1-1-2017
	9.1 Procedure	9-1	
	9.2 Approval of Suppliers	9-2	
10	**SERVICE TO THE CLIENT**	10-1	1-1-2017
	10.1 Client Confidentiality	10-1	
	10.2 Client Support	10-1	
	10.3 Client Feedback	10-2	
11	**COMPLAINTS**	11-1	1-1-2017

MASTER

Section	Title	Page	Effective Date
12	**CONTROL OF NON-CONFORMING ENVIRONMENTAL TESTING WORK**	12-1	1-1-2017
	12.1 Exceptionally Permitting Departures from Documented Policies and Procedures	12-1	
	12.2 Non-conforming Work	12-1	
	12.3 Stop Work Procedures	12-2	
13	**IMPROVEMENT**	13-1	1-1-2017
14	**CORRECTIVE ACTION**	14-1	1-1-2017
	14.1 General Procedure	14-1	
	14.2 Additional Audits	14-2	
	14.3 Technical Corrective Action	14-2	
15	**PREVENTIVE ACTION**	15-1	1-1-2017
16	**CONTROL OF RECORDS**	16-1	1-1-2017
	16.1 Records Maintained	16-1	
	16.2 Records Management and Storage	16-3	
	16.3 Legal Chain of Custody Records	16-4	
17	**AUDITS**	17-1	1-1-2017
	17.1 Internal Audits	17-1	
	17.2 External Audits	17-1	
	17.3 Performance Audits	17-2	
	17.4 System Audits	17-2	
	17.5 Handling Audit Findings	17-2	
18	**MANAGEMENT REVIEWS**	18-1	1-1-2017
	18.1 Management Review Topics	18-1	
	18.2 Procedure	18-1	
19	**DATA INTEGRITY INVESTIGATIONS**	19-1	1-1-2017
	19.1 Ethics and Data Integrity Procedures	19-1	
	19.2 Training	19-1	
	19.3 Confidential Reporting of Ethics and Data Integrity Issues	19-3	
	19.4 Investigations	19-3	
20	**PERSONNEL**	20-1	1-1-2017
	20.1 Overview	20-1	
	20.2 Job Descriptions	20-1	
	20.3 Training	20-1	

Property of ESS LABORATORY

MASTER

Section	Title	Page	Effective Date
21	**ACCOMODATIONS AND ENVIRONMENTAL CONDITIONS**	21-1	1-1-2017
	21.1 Environmental	21-1	
	21.2 Work Areas	21-1	
	21.3 Floor Plan	21-2	
	21.4 Building Security	21-2	
22	**ENVIRONMENTAL METHODS AND METHOD VALIDATION**	22-1	1-1-2017
	22.1 Method Selection	22-1	
	22.2 Laboratory-Developed Methods	22-2	
	22.3 Method Validation	22-2	
	22.4 Estimation of Analytical Uncertainty	22-3	
	22.5 Control of Data	22-4	
23	**CALIBRATION REQUIREMENTS**	23-1	1-1-2017
	23.1 General Equipment Requirements	23-1	
	23.2 Support Equipment	23-3	
	23.3 Analytical Equipment	23-7	
24	**MEASUREMENT TRACEABILITY**	24-1	1-1-2017
	24.1 Reference Standards	24-1	
	24.2 Reference Materials	24-1	
	24.3 Transport and Storage of Reference Standards and Materials	24-2	
	24.4 Labeling of Reference Standards, Reagents, and Reference Materials	24-2	
25	**COLLECTION OF SAMPLES**	25-1	1-1-2017
	25.1 Sampling Containers	25-1	
	25.2 Sampling Plan	25-2	
	25.3 Sampling Records	25-2	
26	**HANDLING SAMPLES AND TEST ITEMS**	26-1	1-1-2017
	26.1 Sample Receipt	26-1	
	26.2 Sample Acceptance	26-2	
	26.3 Sample Identification	26-4	
	26.4 Sample Aliquots / Subsampling	26-5	
	26.5 Sample Storage	26-5	
	26.6 Sample Disposal	26-5	
	26.7 Sample Transport	26-6	
27	**QUALITY ASSURANCE FOR ENVIRONMENTAL TESTING**	27-1	1-1-2017
	27.1 Essential Quality Control Procedures	27-1	
	27.2 Internal Quality Control Practices	27-2	

Property of ESS LABORATORY MASTER

Section		Title	Page	Effective Date
	27.3	Proficiency Test Samples or Interlaboratory Comparisons	27-7	
	27.4	Data Review	27-8	
28	**REPORTING THE RESULTS**		28-1	1-1-2017
	28.1	Test Reports	28-1	
	28.2	Supplemental Test Report Information	28-2	
	28.3	Environmental Testing Obtained from Subcontractors	28-3	
	28.4	Electronic Transmission of Results	28-3	
	28.5	Amendments to Test Reports	28-4	

APPENDICES

Appendix A	Master List of Controlled Documents	App A-1	12-8-2017
Appendix B	Laboratory Organization Chart	App B-1	1-1-2017
Appendix C	Laboratory Floor Plan	App C-1	1-1-2017
Appendix D	Analytical Methods	App D-1	1-1-2017
Appendix E	Laboratory Accreditation / Certification / Recognition	App E-1	1-1-2017
Appendix F	Deleted – subsumed into Section 19	App F-1	1-1-2017
Appendix G	Conflict of Interest/Undue Pressure Policy	App G-1	1-1-2017
Appendix H	Chemistry	App H-1	1-1-2017
	H.1 Method Validation	App H-1	
	H.2 Demonstration of Capability (DOC)	App H-5	
	H.3 Calibration	App H-7	

Property of ESS LABORATORY MASTER

Table of Tables

Table	Title	Page	Revision Date
Table 5-1	Key Personnel Deputies	5-6	1-1-2017
Table 23-2	Summary of Support Equipment Calibration and Maintenance	23-3	1-1-2017
Table 23-3	Calibration Verification Acceptance Criteria for Support Equipment	23-6	1-1-2017
Table 23-5	Analytical Equipment Maintenance	23-8	1-1-2017

MASTER

Table of Figures

Figure	Title	Page	Revision Date
Figure 4-1	Corporate Organization Chart	4-3	1-1-2017
Figure 26-1	Example Chain of Custody	26-7	1-1-2017
Figure 26-2	Example Sample Acceptance Policy	26-8	1-1-2017

MASTER

Section 3

INTRODUCTION AND SCOPE
(TNI V1:M2 – Sections 1, 2, 3)

The purpose of this *Quality Manual* is to describe the management system for ESS LABORATORY. The *Quality Manual* defines the policies, procedures, and documentation that assure analytical services continually meet a defined standard of quality that is designed to provide clients with data of known and documented quality and, where applicable, demonstrate regulatory compliance.

The *Quality Manual* sets the standard under which all laboratory operations are performed, including the laboratory's organization, objectives, and operating philosophy. The *Quality Manual* has been prepared to assure compliance with the 2009 TNI Environmental Laboratory Sector Standard – Volume 1 – Management and Technical Requirements for Laboratories Performing Environmental Analysis (EL-V1-M1 through M7-ISO-2009-Rev.0.2). This Standard is consistent with ISO/IEC 17025:2005 requirements that are relevant to the scope of environmental testing services and thus, the laboratory operates a quality system in conformance with ISO/IEC 17025:2005(E). In addition, the policies and procedures outlined are compliant with the requirements of other State and Federal accreditation and certification programs, as listed in Appendix E.

The *Quality Manual* is available to regulatory bodies and their representatives, in English.

3.1 Scope of Testing

The laboratory's scope of analytical testing services includes those listed in Appendix D.

3.2 Table of Contents, References and Appendices

The Table of Contents is in Section 2 and Appendices are in Section 29.

This *Quality Manual* uses the references included in Modules 1, 2 and 4 of the 2009 TNI Environmental Laboratory Sector Standard – Volume 1 – Management and Technical Requirements for Laboratories Performing Environmental Analysis; the International Standard ISO/IEC 17025:2005(E), Clause 2; USEPA SW-846 On-line; US Title 40 CFR, Parts 136, 141, 142, 143; Massachusetts 310 CMR 42.00; APHA/AWWA/WEF Standard Methods 20th and 22nd Editions; pertinent ASTM Methods, and various other references, as listed in ESS LABORATORY SOPs.

3.3 Glossary and Acronyms Used

Quality control terms are generally defined within the Section that describes the activity.

3.3.1 Glossary

MASTER

The **Terms and Definitions** used by ESS Laboratory may be found in the references listed below.

3.3.1.1 **The TNI Standard:** Modules 1-7 in the 2009 TNI Environmental Laboratory Sector Standard – Volume 1 – Management and Technical Requirements for Laboratories Performing Environmental Analysis (EL-V1, M1 through M7, ISO-2009).

3.3.1.2 **ESS Laboratory Certificates of Analysis (Customer Reports) and SOPs.**

3.3.2 Acronyms

A list of acronyms used in this document and their definitions are:

AB	–	Accrediting Body
A2LA	–	American Association for Laboratory Accreditation
ANSI	–	American National Standards Institute
ASQC	–	American Society for Quality Control
ASTM	–	American Society for Testing and Materials
Blk	–	Blank
BS/BSD	–	Blank Spike/Blank Spike Duplicate (a/k/a LCS/LCSD). See LCS below.
°C	–	degrees Celsius
°F	–	degrees Fahrenheit
cal	–	calibration
CAB	–	Conformity Assessment Body (A2LA)
CAS	–	Chemical Abstract Service
CCV	–	Continuing calibration verification
COC	–	Chain of custody
DO	–	Dissolved oxygen
(I)DOC	–	(Initial) Demonstration of Capability
EPA	–	Environmental Protection Agency
g/L	–	grams per liter
GC/MS	–	gas chromatography/mass spectrometry
ICP-MS	–	inductively coupled plasma-mass spectrometry
ICV	–	Initial calibration verification
ISO/IEC	–	International Organization for Standardization/International Electrochemical Commission
lb/in2	–	pound per square inch
LCS/LCSD	–	Laboratory control sample/ Laboratory control sample duplicate
LFB	–	Laboratory fortified blank
LIMS	-	Laboratory Information Management System (Promium "Element")
LOD	-	Limit of Detection
LOQ	-	Limit of Quantitation
LLOQ	-	Lower Limit of Quantitation
MDL	–	method detection limit
mg/Kg	–	milligrams per kilogram
mg/L	–	milligrams per liter
MS	–	matrix spike
MSD	–	matrix spike duplicate
NELAC	–	National Environmental Laboratory Accreditation Conference
NELAP	–	National Environmental Laboratory Accreditation Program
NIST	–	National Institute of Standards and Technology

MASTER

PT	–	Proficiency Test(ing)
PTP	-	Proficiency Testing Provider
PTPA	–	Proficiency Testing Provider Accreditor
QA	–	Quality Assurance
QC	–	Quality Control
QM	–	*Quality Manual*
RL	–	Reporting level
RPD	–	Relative percent difference
RSD	–	Relative standard deviation
SOPs	–	Standard operating procedures
SVOC	–	Semivolatile organic compound
spk	–	spike
std	–	standard
TNI	-	The NELAC Institute
ug/L	–	micrograms per liter
UV	–	Ultraviolet
VOC	–	Volatile organic compound
WET	–	Whole effluent toxicity

3.4 Management of the *Quality Manual*

The Quality Manager is responsible for maintaining the currency of the *Quality Manual*.

The *Quality Manual* is reviewed at least annually by the Quality Manager and laboratory personnel to ensure it still reflects current practices and meets the requirements of any applicable regulations or client specifications. Sections of the manual are updated by making a change to the Section and then increasing the revision number by one (x-xx in the case of a minor revision). The cover sheet of the *Quality Manual* (Section 1) must be re-signed and the Table of Contents (Section 2) is updated whenever a Section is updated.

The *Quality Manual* is considered confidential within *ESS LABORATORY* and may not be altered in anyway except by approval of the Laboratory Director and Quality Manager. If it is distributed to external users, it is for the purpose of reviewing ESS LABORATORY's management system and may not be used for any other purpose without written permission.

MASTER

Section 4

ORGANIZATION
(TNI V1:M2 – Section 4.1; ISO/IEC 17025/2005(E) - Clause 4.1)

ESS LABORATORY, a DIVISION OF THIELSCH ENGINEERING INC, a legally responsible entity, is a commercial analytical testing laboratory specializing in environmental chemistry. ESS Laboratory, while owned by Thielsch Engineering, Inc., maintains independent management systems, has no conflicting interests, and does not support the functions of Thielsch Engineering, Inc.
ESS Laboratory was established in 1978 and was acquired by Thielsch Engineering, Inc. in June of 1996. The laboratory has evolved into a state-of-the art facility that provides a wide range of Analytical Services in support of:

- Soil and Water Pollution Monitoring
- Environmental Impact Assessment
- Industrial Process Control
- Effluent and Emission Pollution Control

These services are provided to various customers including:

- Federal and State agencies
- Engineering Firms
- Private Industry/Homeowners

The laboratory is responsible for carrying out testing activities that meet the requirements of the TNI Standard, the ISO/EIC 17025 Standard and that meet the needs of the client and appropriate regulatory authorities. These objectives are achieved through application of the policies and procedures outlined in this Section and throughout the *Quality Manual*:

- The laboratory assures that it is impartial and that personnel are free from undue commercial, financial, or other undue pressures that might influence their technical judgment.

- Management and technical personnel have the authority and resources to carry out their duties, including the implementation, maintenance and improvement of the management system, and have procedures to identify and correct departures from the laboratory's management system.

- Personnel understand the relevance and importance of their duties as related to the maintenance of the laboratory's management system.

- Ethics and data integrity policy and procedures (see Appendix F - "Data Integrity Policy", Section 5 – "Management" and Section 19 – "Data Integrity Investigations") ensure personnel do not engage in activities that diminish confidence in the laboratory's capabilities.

MASTER

- Confidentiality is maintained. Every effort to protect customers' confidential information and proprietary rights, including procedures for protecting the electronic storage and transmission of results, is made.

4.1 Organization

The laboratory is a commercial organization. The Tax ID number is available on request, when applicable.

The laboratory conducts analytical operations in Cranston, RI and operates a satellite in Hopkinton, Mass, the latter being solely for the purpose of subsidiary customer field services and courier services. The management system covers work at both locations.

The Corporate Organization Chart can be found in Figure 4-1 below:

The laboratory's organization chart can be found in Appendix B.

Additional information regarding responsibilities, authority and interrelationship of personnel who manage, perform or verify testing is included in Section 5 – "Management" and Section 20 – "Personnel". These Sections also include information on supervision, training, technical management, job descriptions, quality personnel, and appointment of deputies for key managerial personnel.

The laboratory has the resources and authority to operate a management system that is capable of identifying departures from that system and from procedures during testing, and initiates actions to minimize or prevent departures. It is the policy of ESS Laboratory not to engage in any activities that may endanger trust in the independence of its judgement regarding its testing activities.

4.2 Conflict of Interest and Undue Pressure

The organizational structure indicated above minimizes the potential for conflicting or undue interests that might influence the technical judgment of analytical personnel.

Arrangements, such as policies and procedures to prevent commercial, financial or other influences that may negatively affect the quality of the work or negatively reflect on the competence, impartiality, judgment, quality of work or operational integrity are described in Appendix G.

In order to ease any scheduling pressures, employees are allowed flexible working hours, at the discretion of Management.

MASTER

Figure 4-1 – Corporate Organization Chart

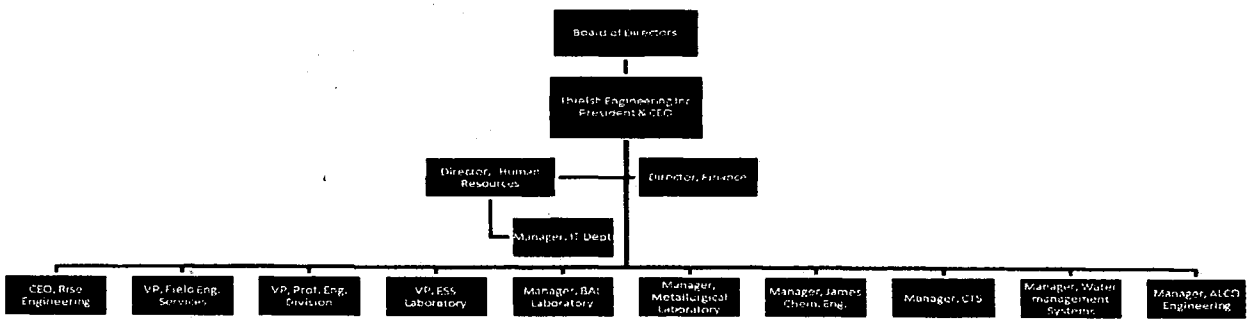

MASTER

Property of ESS LABORATORY

Section 5

MANAGEMENT
(TNI V1:M2 – Section 4.2; ISO/IEC 17025/2005(E) - Clause 4.2)

The laboratory maintains a management system that is appropriate to the scope of its activities.

5.1 Management Requirements

Top management ("Management") includes the Laboratory Director, Laboratory/ Operations/Technical Manager and the Quality Manager.

Management's commitment to good professional practice and to the quality of its products is defined in the Quality Policy statement, Section 5.3 below.

Management establishes, implements and maintains, by periodic review, a management system appropriate to the scope of its activities, ensuring that the laboratory documents its policies, systems, programs, procedures and instructions to the extent necessary to assure the quality of its data and ensures the integrity of the management system is maintained when changes to the management system are planned and implemented. Management ensures that its personnel are aware of the relevance and importance of their activities and how they contribute to the achievement of the objectives of the management system.

Management has overall responsibility for the technical operations and has the authority needed to generate the required quality of laboratory operations. Management ensures communication within the organization to maintain an effective management system and to communicate the importance of meeting customer, statutory, and regulatory requirements. Management assures that management system documentation is known and available so that appropriate personnel can implement their part. When changes to the management system occur or are planned, managers ensure that the integrity of the system is maintained.

Management is responsible for carrying out testing activities that meet the requirements of the TNI Standard, the ISO/IEC 17025 Standard, various state-specific regulations, and that meet the needs of the client.

Managers implement, maintain, and improve the management system, and identify noncompliance with the management system of procedures by using available tools such as audit and surveillance results, control charts, participation in a suitable program of inter-laboratory comparisons where possible, data analysis, corrective and preventive actions, customer feedback and management reviews, in efforts to monitor trends. Managers initiate actions to prevent or minimize noncompliance.

Management ensures technical competence of personnel operating equipment, performing tests, evaluating results, or signing reports, and limits authority to perform laboratory functions to those appropriately trained and/or supervised.

MASTER

Personnel are hired with sufficient education to meet written specified job requirements and undergo mandatory on-the-job training per SOP 80.0016, culminating in a formal Demonstration of Capability for each method they perform, at which time they may act independently, per written method requirements. See also Section 20 – Personnel, of this Quality Manual.

Management is responsible for defining the minimal level of education, qualifications, experience, and skills necessary for all positions in the laboratory and assuring that technical staff have demonstrated capabilities in their tasks and maintain records of such demonstrations. Training is kept up to date as described in Section 20 – "Personnel" by periodic review of training records and through employee performance review.

Management bears specific responsibility for maintenance of the management system. This includes defining roles and responsibilities to personnel, approving documents, providing required training and adequate supervision, providing a procedure for confidential reporting of data integrity issues, and periodically reviewing data, procedures, and documentation. The assignment of responsibilities, authorities, and interrelationships of the personnel who manage, perform, or verify work affecting the quality of environmental tests is documented in the ESS Laboratory Policy Manual (Job Descriptions) and in this section.

Management ensures that all sample acceptance criteria are verified and that samples are logged into the sample tracking system and properly labeled and stored.

Management is responsible for recording all analytical and operational activities of the laboratory and recording the quality of all data reported.

Management ensures that audit findings and corrective actions are completed within required time frames.

Designated deputies are appointed by management during the absence of the Laboratory Manager, Laboratory/Operations/Technical Manager or the Quality Manager, and always if the absence is more than 15 days.

5.2 Management Roles and Responsibilities

The following laboratory management staff members are considered key management personnel:

5.2.1 Laboratory Director

The Laboratory Director is responsible for the overall quality, safety, financial, technical, human resource and service performance of the laboratory. The Laboratory Director provides the resources necessary to implement and maintain an effective quality and data integrity program.

5.2.1.1 Responsibilities

The Laboratory Director is responsible for:

MASTER

a. Planning, directing and controlling the operation and development of the laboratory to meet financial and operational performance standards.

b. Building and leading a strong, cohesive management team that is continually focused on ESS Laboratory's key success factors in the areas of data quality, customer service, people management and financial discipline.

c. Ensuring that all operations are in compliance with the laboratory's quality assurance manual. Suspending any activities which do not meet the standards set forth in this quality manual.

d. Ensuring that personnel are free from any conflicts/undue pressures that might adversely affect the quality of their work.

e. Reviewing and approving all SOPs and policies prior to their implementation and ensuring all approved SOPs and policies are provided to laboratory personnel and are adhered to.

f. Ensuring that appropriate corrective actions are taken to address analyses identified as requiring such actions by internal and external performance or procedural audits.

g. Continually improving the effectiveness of the management system.

5.2.2 Quality Manager

The Quality Manager (or designee) is responsible for the oversight and review of quality control data, but is independent from laboratory operations, per laboratory organizational chart (Appendix B). The Quality Manager's training and proof of experience in QA/QC procedures, knowledge of analytical methods, and the laboratory's management system are available in the employee's records, which are kept in the Quality Assurance Department.

5.2.2.1 Responsibilities

The Quality Manager is responsible for:

a. serving as a focal point for QA/QC;

b. arranging or conducting annual internal audits without outside (e.g., managerial) influence;

c. notifying management of deficiencies;

d. independent oversight and review of quality control data;

e. having knowledge of analytical methods for which data is reviewed.

f. monitoring corrective actions;

MASTER

g. ensuring that the management system related to quality is implemented and followed at all times;

h. monitoring and maintaining laboratory certifications;

i. keeping this *Quality Manual* current by updating as needed;

j. has the authority and responsibility for ensuring all personnel understand their contribution to the quality system;

k. ensuring communication takes place at all levels within the laboratory regarding the effectiveness of the quality system;

l. evaluating the effectiveness of training;

m. ensuring that personnel are aware of the relevance and importance of their activities and how they contribute to the achievement of the objectives of the management system; and

n. using available tools, such as audit and surveillance results, control charts, proficiency testing results, data analysis, corrective and preventive actions, customer feedback, daily operations reports and management reviews in efforts to monitor trends and continually improve the quality system.

5.2.3 Laboratory/Operations Manager/Technical Manager

The Technical Manager (or designee) is a full-time laboratory staff member and supervises laboratory operations and data reporting. The Technical Manager's proof of experience in the fields of accreditation may be found in the pertinent training file which is maintained by the Quality Assurance Department.

If the Technical Manager is absent for fifteen (15) calendar days or more, a deputy (see Table 5-1 below) with appropriate qualifications will perform the Technical Manager's duties. Beyond a thirty-five (35) calendar day absence, management will notify the primary accreditation body in writing of the absence of the Technical Manager and the appointment of the deputy.

The Technical Manager is not the technical manager of more than one accredited environmental laboratory.

5.2.3.1 Responsibilities

The Technical Manager is responsible for:

a. meeting the general and education requirements and qualifications found in Sections 4.1.7.2 and 5.2.6.1 of the TNI Standard - EL-V1M2-2009 and in Massachusetts 310 CMR 42.00;

MASTER

b. ongoing monitoring of timeliness of response to client needs, performance data, and the validity of the analyses for the laboratory;

c. managing operations in accordance with laboratory policies pertaining to hiring, training and individual performance review;

d. ensuring operations meet laboratory budgetary control procedures;

e. providing opportunities for training and cross training to ensure smooth operations and enhancement of employees growth; and

f. Continually improving the effectiveness of the management system.

5.2.4 Departmental Technical Supervisors

5.2.5 Support System and Administrative Managers

5.2.5.1 Project (Customer Services) Managers

5.2.5.2 Administration Department Supervisor

5.2.5.3 Sample Receiving Department Supervisor

5.2.5.4 IT/LIMS Administrator

5.2.5.5 Purchasing Agent

5.2.4.6 Sales Executives

5.2.6 Laboratory Key Personnel Deputies

The following table defines who assumes the responsibilities of key personnel in their absence:

MASTER

Table 5-1 Key Personnel Deputies		
Key Personnel	**Deputy(ies)**	**Comment**
Laboratory Director	Operations/Technical Manager	
QA Manager	Laboratory Director /QA Officer	
Operations/Technical Manager	Laboratory Director	
Departmental Supervisors	Operations/Technical Manager	
Supervisor, Project Management	Other Project Managers	
Admin Supervisor	Laboratory Director	
Purchasing Agent	Corporate Purchasing	
IT/LIMS Administrator	Laboratory Director	
Sample Receiving Supervisor	Operations Manager	
Logistics Manager	Project Manager(s)	
Sales Executives	Other Sales Executives	

5.3 Quality Policy

Management's commitment to quality and to the management system is stated in the Quality Policy below, which is upheld through the application of related policies and procedures described in the laboratory's *Quality Manual*, SOPs and policies.

Quality Assurance/Quality Control (QA/QC) in the laboratory is a company-wide function that depends upon cooperative working relationships and multi-level review. Responsibilities for QA/QC functions begin with the bench scientist and extend to the Laboratory Director. The primary level of quality assurance resides with the bench scientist who, after matriculation in the laboratory training program, is responsible for:

- Precisely following the analytical methods as documented in the Standard Operating Procedures (SOP).
- Good Laboratory Practices (GLP)
- Good Automated Laboratory Practices (GALP)
- Good documentation skills
- Carefully documenting each step in the appropriate format
- Conscientiously obtaining peer review as required
- Promptly alerting laboratory managers and/or QA staff members to problems or anomalies.

The supervisor of each laboratory department is responsible for the quality of the data generated by the scientists in that department. The laboratory implements and monitors the specific QC protocols and QA programs within the laboratory to ensure a continuous flow of high-quality data. The laboratory provides its scientists with up-to-date resources including space, equipment, instrumentation, and time in order to accomplish top-quality performance.

All laboratory personnel are responsible for assisting the Laboratory Director with the implementation and maintenance of their quality functions. These responsibilities

Property of ESS LABORATORY
MASTER

may include monitoring QC practices, updating laboratory SOPs, and helping to manage analysis of Performance Evaluation samples.

Ultimately, the success of the QA program depends on the cooperation and support of the entire organization. ESS Laboratory's most valuable resource is its staff of dedicated professionals who take personal pride in the quality of their performance.

Management firmly believes that only by appropriately communicating the QA Plan to all employees, and ensuring that it is effectively implemented, can the needs of clients and regulatory bodies be met.

ESS Laboratory Quality Assurance Mission Statement

Our mission is to establish and implement a quality assurance program that provides our clients with data of known and documented quality in a timely manner.

From the moment an environmental sample arrives at the laboratory to the final reporting of reliable and accurate data, our quality assurance and quality control program is our key to continued success and, as company policy, is strictly enforced.

While the quality assurance manager directs and oversees all quality policies, we regard it as essential that employees at all levels of operation and management thoroughly understand the quality documentation and execute the program. The management of ESS Laboratory is committed to good professional practice, complying with all accreditation standards and improving the quality system and the effectiveness of the management system. Each ESS employee is individually responsible for realizing our commitment to quality and the achievement of our mission.

5.4 Ethics and Data Integrity System

The laboratory's Ethics and Data Integrity policy, program, training and investigations are discussed in Section 19 – "Data Integrity Investigations".

5.5 Documentation of Management/Quality System

The management system is defined through the policies and procedures provided in this *Quality Manual* and written laboratory Standard Operating Procedures (SOPs) and policies.

5.5.1 Quality Manual

The *Quality Manual* contains the following required items:

5.5.1.1 document title;

5.5.1.2 laboratory's full name and address;

5.5.1.3 name, address (if different from above), and telephone number of individual(s) responsible for the laboratory;

MASTER

5.5.1.4 identification of all major organizational units which are to be covered by this quality manual and the effective date of the version;

5.5.1.5 identification of the laboratory's approved signatories;

5.5.1.6 the signed and dated concurrence (with appropriate names and titles), of all responsible parties including the quality manager(s), technical manager(s), and the agent who is in charge of all laboratory activities, such as the laboratory director or laboratory manager;

5.5.1.7 the objectives of the management system and contain or reference the laboratory's policies and procedures;

5.5.1.8 the laboratory's official quality policy statement, which shall include management system objectives and management's commitment to ethical laboratory practices and to upholding the requirements of the referenced Standards; and

5.5.1.9 a table of contents, and applicable lists of references, glossaries and appendices.

This *Quality Manual* contains or references all required elements as defined by the TNI Standard - V1:M2, Section 4.2.8.4., and ISO/IEC 17025:2005(E), Clause 4.2.

5.5.2 Standard Operating Procedures (SOPs)

Standard operating procedures (SOPs) represent all phases of current laboratory operations including an effective date, revision number, and signature of the approving authorities, as designated in SOP 80.0012 (Document Control) and are available to all personnel. They contain sufficient detail such that suitably qualified personnel could perform the procedures. There are two types of SOPs used in the laboratory: 1) test method SOPs, which have specific requirements as outlined below, and 2) general use SOPs which document general procedures.

All technical SOPs (e.g., sample preparation, analytical procedures, sample storage, or sample receipt) shall be reviewed for accuracy and adequacy at least annually, and updated if necessary, and be readily accessible to all personnel. All such reviews shall be conducted by personnel having the pertinent background, recorded, and made available for assessment.

Each accredited analyte or method has an SOP. Sometimes an SOP is a copy of a method, and any additions are clearly described. The laboratory's test method SOPs include the following topics, where applicable, per SOP 80.0012:

i. identification of the method;
ii. applicable matrix or matrices;
iii. limits of detection and quantitation;
iv. scope and application, including parameters to be analyzed;
v. summary of the method;
vi. definitions;
vii. interferences;
viii. safety;
ix. equipment and supplies;
x. reagents and standards;

MASTER

xi. sample collection, preservation, shipment and storage;
xii. quality control;
xiii. calibration and standardization;
xiv. procedure;
xv. data analysis and calculations;
xvi. method performance;
xvii. pollution prevention;
xviii. data assessment and acceptance criteria for quality control measures;
xix. corrective actions for out-of-control data;
xx. contingencies for handling out-of-control or unacceptable data;
xxi. waste management;
xxii. references; and
xxiii. any tables, diagrams, flowcharts and validation data.
xxiv. equipment/instrument maintenance;
xxv. computer hardware and software; and
xxvi. troubleshooting.

5.5.3 Order of Precedence

In the event of a conflict or discrepancy between policies, the order of precedence is as follows unless otherwise noted:

- Quality Manual
- SOPs and Policies
- Other (Work Instructions (WI), memos, flow charts, etc.)

MASTER

Section 6

DOCUMENT CONTROL
(TNI V1:M2 – Section 4.3; ISO/IEC 17025/2005(E) - Clause 4.3

This Section describes how the laboratory establishes and maintains a process for document management. Procedures for document management include controlling, distributing, reviewing, and accepting modifications. The purpose of document management is to keep documents up to date and preclude the use of invalid and/or obsolete documents.

Documents can be SOPs, policy statements, standards, instruction manuals, specifications, calibration tables, charts, textbooks, posters, notices, memoranda, software, drawings, plans, etc. These may be on various media, whether hard copy or electronic, and they may be digital, analog, photographic or written.

The laboratory manages three types of documents: 1) controlled, 2) approved/uncontrolled, and 3) obsolete.

A controlled document is one that is uniquely identified, issued, tracked, and kept current as part of the management system. Controlled documents may be internal documents or external documents. Any documents providing instructions to laboratory personnel (e.g., operator aids) are considered part of the management system and are subject to document control procedures.

An approved document means it has been reviewed, and either signed and dated, or acknowledged in writing or by secure electronic means by the issuing authority(ies).

An uncontrolled document is watermarked with the ESS Logo and is watermarked "uncontrolled" at the top and bottom of the page.

Obsolete documents are documents that have been superseded by more recent versions or are no longer needed.

6.1 Controlled Documents

Documents will be reviewed, revised (as appropriate) and approved for use by authorized personnel in accordance with SOP 80.0012 (Document Control) and 80.0029 (Management of Procedure Documents), prior to issue.

Documents are reviewed (and revised, if necessary) at least annually to ensure their contents are suitable and in compliance with the current management systems requirements, and accurately describe current operations. Reviews (internal or external) of management system documentation shall be maintained and made available for assessment.

Approved copies of documents are available to staff at all locations where operations are essential to the effective functions of the laboratory. Should SOPs be distributed electronically, analysts will be able to view SOPs on computers at work stations. These documents will be in PDF format and maintained on a network that all

Property of ESS LABORATORY
MASTER

computers have access to. This type of electronic distribution will still require a list of where the document was distributed to, so that the electronic copy can be updated when a procedure is updated. A PDF of a controlled document is watermarked with the ESS Logo and is watermarked "controlled document" at the top and bottom of the page; cover pages of such SOPs are maintained as departmental hard copies which have been initialed and dated by personnel in accordance with SOP 80.0016.

Controlled internal documents are uniquely identified with 1) a unique name or number identification 2)date of issue, 3) revision identification, 4) page number, 5) the total number of pages (or a mark to indicate the end of the document), and 6) the signatures of the issuing authority (i.e. management) in accordance with SOPs 80.0012, 80.0016 and 80.0029. Documents are distributed by the Quality Assurance Manager in accordance with these SOPs.

A master list (Appendix A) of controlled internal documents is maintained that includes location, and major revision number and dates. A master list of controlled external documents is also maintained that includes title, author, copyright date (where applicable), revision number or date of publication, and location. The controlled document list is maintained and kept in the QA Dept. files by the Quality Assurance Manager and is updated whenever revisions occur. Distribution lists of controlled documents are maintained by the Quality Assurance Manager.

6.1.1 Document Changes to Controlled Documents

Affected personnel are notified of changes to management systems documents and supporting procedures, including technical documents, in accordance with SOPs 80.0012, 80.0016 (Training) and 80.0029.

6.1.1.1 Paper Document Changes

Document changes are approved by the same function that performed the original review unless specifically designated otherwise.

The document management process allows for handwritten or minor modifications to documents. The date and approval is documented with the modifications and these changes are processed and tracked per SOP 80.0012.

All document modifications are approved. Changes that are not process modifications but clarifications may be performed without revision. Approval is required. The modified document is then copied and distributed, and obsolete documents are removed according to the master list of controlled documents.

Amendments/modifications to documents are incorporated into a new revision and reissued when the document is reviewed and updated on or before its scheduled review cycle.

MASTER

A reason for the modification or change is provided as historical information in the revised document per SOP 80.0012.

6.1.1.2 Electronic Document Changes

Suggested revisions to electronic documents are presented to top management (Director, Operations and Quality) for review and approval. Changes to electronic documents are approved as outlined in SOP 80.0012.

Where practical, the altered text or new text in the draft is identified during the revision or review process to provide for easy identification of the modifications.

Procedures (Series 70 SOPs and 80.0040) have been established describing how changes in documents maintained in computerized systems are made and controlled.

6.2 Obsolete Documents

All invalid or obsolete documents are removed from general distribution, or otherwise prevented from unintended use.

Obsolete documents retained for legal use or historical knowledge preservation are appropriately marked and retained per SOP 80.0029. They are stamped "Archived" and initialed and dated by the QA Manager. Archived computer resident documents are kept on file in the QA Dept. for at least 10 years. Hardcopy documents may be retained, depending upon their nature.

MASTER

Section 7

REVIEW OF REQUESTS, TENDERS AND CONTRACTS
(TNI V1:M2 – Section 4.4; ISO/IEC 17025/2005(E) - Clause 4.4)

The review of all new work assures that oversight is provided so that requirements are clearly defined, that the laboratory (lab) has adequate resources and capability and that the test method is applicable to the customer's needs. This process assures that all work will be given adequate attention without shortcuts that may compromise data quality.

NOTE: A request originates with a client who requires testing services; a tender is a proposal from the lab in response to the client's request, and a contract is the final agreement between lab and client.

Contracts for new work may be formal bids, signed documents, verbal, or electronic. The client's requirements, including the methods to be used, must be clearly defined, documented and understood. Requirements might include target analyte lists, project specific reporting limits (if any), project specific quality control requirements (if any), turnaround time, and requirements for data deliverables. The review must also cover any work that will be subcontracted by the laboratory.

7.1 Procedure for the Review of Work Requests

The Laboratory Director, Operations Manager, and Quality Manager determine if the laboratory has the necessary accreditations, resources, including schedule, equipment, deliverables, and personnel to meet the work request. The procedure is detailed in SOPs 80.0051 (Requests, Tenders & Contracts) and 80.0048 (Subcontracting).

Project Managers/Sales Representatives inform the client of the results of the review and if it indicates any potential conflict, deficiency, lack of accreditation, or inability of the lab to the complete the work satisfactorily.

The client is informed of any deviation from the contract including the test method or sample handling processes. All differences between the request and the final contract are resolved and recorded before any work begins. It is necessary that the contract be acceptable to both the laboratory and the client. Documentation of this process is described in SOP 80.0051.

The review process is repeated when there are amendments to the original contract by the client. The participating personnel are given copies of the amendments. The amendments are maintained per SOP 80.0051.

Note: For repetitive routine projects, the review might be made only at the initial inquiry stage, or on granting of a contract for on-going routine work performed under a general agreement with the client, provided the client's requirements don't change.

MASTER

7.2 Documentation of Review

Records are maintained for every contract or work request, when appropriate. This includes pertinent discussions with a client relating to the client's requirements or the results of the work during the period of execution of the contract. Documentation of this process is outlined in SOPs 80.0051 and 70.0004 (Work Order Management). Records of all project-related communication with the client (including e-mails, fax, telephone conversation etc.) are kept per SOPs 80.0051, 70.0004 and 70.0008 (Sample Log-in).

MASTER

Section 8

SUBCONTRACTING OF ENVIRONMENTAL TESTS
(TNI V1:M2 – Section 4.5; ISO/IEC 17025/2005(E) - Clause 4.5

When ESS Laboratory subcontracts work, whether because of unforeseen reasons (e.g. workload, need for further expertise, or temporary incapacity) or on a continuing basis (e.g. through permanent subcontracting, agency or franchising arrangements), this work is placed with a competent subcontractor. A competent subcontractor is one that complies with the appropriate standard for the work in question.

A subcontract laboratory is defined as a laboratory external to this laboratory, or at a different location than the address indicated on the front cover of this manual, that performs analyses for this laboratory. This also includes a laboratory under the same corporate umbrella.

When subcontracting analytical services, the laboratory assures work requiring accreditation is placed with an appropriately accredited laboratory or one that meets applicable statutory and regulatory requirements for performing the tests.

8.1 Procedure

The Quality Assurance Dept. maintains a list of subcontractors.

A copy of any required certificate and certified analyte list(s) from subcontractors is maintained as evidence of compliance. This information is maintained by the Quality Assurance Dept. and is kept in a network directory folder.

The certificate and analyte list are checked by the project manager(s) to ensure the subcontracting laboratory has the appropriate accreditation to do the work.

ESS Laboratory notifies the client of the intent to subcontract the work, in writing, gaining the approval of the client to subcontract their work prior to implementation, preferably in writing. Any verbal instructions are documented.

The laboratory performing the subcontracted work is identified in the final report. The laboratory assumes responsibility to the client for the subcontractor's work, except in the case where a client or a regulating authority specified which subcontractor is to be used. Procedure is detailed in SOP 80.0048.

The Quality Manager/Officer completes the Subcontracting Approval Form and has supporting documentation on file prior to initiation of any work. A listing of all approved subcontracting laboratories and supporting documentation is filed in a network directory. A letter or e-mail is sent to the subcontracting laboratory, which will be NELAC-Accredited, if required, requesting the following information;

1. A copy of the quality manual (optional)
2. A copy of necessary certifications

MASTER

Section 9

PURCHASING SERVICES AND SUPPLIES
(TNI V1:M2 – Section 4.6; ISO/IEC 17025/2005(E) - Clause 4.6)

The laboratory ensures that purchased supplies and services that affect the quality of environmental tests are of the required or specified quality, by using approved suppliers and products.

The laboratory has procedures for purchasing, receiving, and storage of supplies that affect the quality of environmental tests.

9.1 Procedure

Management reviews and approves the supplier of services and supplies and approves technical content of purchasing documents prior to ordering, in accordance with SOPs 80.0020 (Vendor Qualification) and 70.0003 (Purchasing).

Evaluation and selection of suppliers and vendors is performed, in part, on the basis of the quality of their products, their ability to meet the demand for their products, the overall quality of their services, their past history and competitive pricing. This is achieved through evaluation of objective evidence of quality furnished by the supplier, which can include certificates of analysis, recommendations, and proof of historical compliance with similar programs for other clients. To ensure that quality critical consumables and equipment conform to specified requirements, all purchases from specific vendors are approved by a member of the management staff (*standards and reagents must be of the appropriate analytical grade)*. Ongoing evaluation of suppliers is accomplished by ensuring the supplier ships the product or material ordered and that the material is of the appropriate quality, by signing packing slips or other supply receipt documents, after inspection. The purchasing documents contain the data that adequately describes the services and supplies ordered. The description may include type, class, grade, identification, specifications or other technical information.

The supplies received are inspected for breakage, leaks or any other damage. The supplies and chemicals are checked for description, vendor/source, quantity, receipt and expiration dates, concentration, lot/serial number certificate of analysis, calibration/verification records etc. per SOP 80.0013 (Supplies Review and Tracking). The supplies received are stored according to manufacturer's recommendations, laboratory SOPs or test method specifications.

Any documents received with the supplies and services, including specifications, certificates of analyses, warranties, maintenance records, calibration records etc., are kept on file, preferably electronically in the LIMS. Any such hard copy documents are filed by personnel in the department which ordered and received the supplies.

The purchased supplies and reagents that affect the quality of the tests are not used until they are inspected or otherwise verified as complying with requirements defined

Property of ESS LABORATORY MASTER

in the test method, in accordance with SOP 80.0013 and related departmental SOPs 20.0001, 30.0003, 40.0039, 50.0006 and 60.0001; however, see following note.

NOTE: EPA Method 8270D, Section 9.6.7 states "When new reagents or chemicals are received, the lab should monitor the blanks associated with samples for any signs of contamination. It is not necessary to test every new batch of reagents or chemicals *prior to sample preparation* if the source shows no prior problems."

This ruling may also be considered for application to other methods.

9.2 Approval of Suppliers

The Purchasing Agent maintains a list of approved suppliers. The list is also included in 80.0020 (Vendor Qualification), a copy of which is available to all departments.

MASTER

Section 10

SERVICE TO THE CLIENT

(TNI V1:M2 – Section 4.7; ISO/IEC 17025/2005(E) - Clause 4.7)

The laboratory collaborates with clients and/or their representatives in clarifying their requests and in monitoring laboratory performance related to their work. Each request is reviewed to determine the nature of the request and the laboratory's ability to comply with the request within the confines of prevailing statutes and/or regulations, without risk to the confidentiality of other clients.

10.1 Client Confidentiality

The laboratory confidentiality policy is to not divulge or release any information to a third party without proper authorization. Third party requests for data and information are referred to the client. Data and records identified as proprietary, privileged, confidential, or affecting national security are exempt from disclosure.

All electronic data (storage or transmissions) are kept confidential, based on technology and laboratory limitations, as required by client or regulation. Confidential client data and correspondence are stored electronically in the laboratory information management system, user e-mail records, internal network directories and secure online websites, which are password-protected and may only be accessed by authorized employees or clients.

Procedures are outlined in various administrative SOPs (70.0004, 70.0005 and 70.0008).

10.2 Client Support

Communication with clients, or their representative(s), is maintained in a timely manner, to provide proper instruction and modification for testing. Technical staff is available to discuss any technical questions or concerns the client may have.

The client, or their representative, may be provided reasonable access to laboratory areas for witnessing testing or substantiating qualifications.

Delays or major deviations to the testing are communicated to the client immediately (preferably within one hour, or at latest by close of business that day), in writing or by telephone, by the project manager.

The laboratory will provide the client with all requested information pertaining to the analysis of their samples. An additional charge may apply for additional data/information that was not requested prior to the time of sample analysis or previously agreed upon.

MASTER

Value-added services include supplying data confidentially to clients as it is being generated, via the Element Data System web access program and finished reports via the Client Connect online reporting program.

The client will be notified prior to changes in LIMS software or hardware configuration that will adversely affect customer electronic data, by project management.

10.3 Client Feedback

The laboratory seeks both negative and positive feedback following the completion of projects, and periodically for ongoing projects. Feedback provides acknowledgement, corrective actions where necessary, and opportunities for continuous improvement.

Negative customer feedback is documented as a customer complaint (see Section 11 – "Complaints").

Feedback from clients is sought via a survey request on the ESS Laboratory website and by management/project managers/sales personnel during routine communications with clients, and is documented and circulated to staff members, normally by e-mail or verbally.

MASTER

Section 11

COMPLAINTS

(TNI V1:M2 – Section 4.8; ISO/IEC 17025/2005(E) - Clause 4.8)

The purpose of this Section is to assure that customer complaints are addressed and corrected. This includes requests to verify results or analytical data. Complaints provide the laboratory an opportunity to improve laboratory operation and client satisfaction.

Complaints by customers or other parties are reviewed by management and an appropriate action is determined and implemented in a timely manner. All customer complaints are documented by the person receiving the complaint and addressed to the responsible manager.

If it is determined that the complaint has merit, the procedures outlined in Section 14 – Corrective Action are followed. If it is determined that a complaint is without merit, it is documented, and the client is contacted by project manager or sales executive.

A complaint, such as a concern that data is repeatedly late, should be reviewed for preventive action (see Section 15 – "Preventive Action") to minimize a future occurrence.

MASTER

Section 12

CONTROL OF NON-CONFORMING ENVIRONMENTAL TESTING WORK
(TNI V1:M2 – Section 4.9; ISO/IEC 17025/2005(E) - Clause 4.9)

Non-conforming work is work that does not meet acceptance criteria or requirements. Non-conforming work can include departures from standard operating procedures or test methods or unacceptable quality control results (see Section 27 – "Quality Assurance for Environmental Testing"). Identification of non-conforming work can come through customer complaints, quality control, instrument calibration, evaluating consumable materials, staff observation, final report review, management reviews and internal and external audits.

12.1 Exceptionally Permitting Departures from Documented Policies and Procedures

Requests for departures from laboratory procedures are approved by top management and documented, and are only permitted after appropriate precision, accuracy and detection limit data have been generated and shown to satisfy client's criteria. The client must approve major modifications of any methods. Approved method variances are documented in the case narrative to the client. When SOPs representing different versions of the same method are available for use, the SOP title and method summary (which is found in the body of the SOP) describe the particular conditions of use for that method; such SOPs may only be used at client's direction or with client's approval, in writing.

Planned departures from procedures or policies do not require audits or investigations.

12.2 Non-Conforming Work

The lab policy for control of non-conforming work is to identify the nonconformance, determine if it will be permitted, and take timely and appropriate action commensurate with the risk to data quality. All employees have the authority to stop work on samples when any aspect of the process does not conform to laboratory requirements.

The responsibilities and authorities for the management of non-conforming work are detailed in SOP 80.0009 (Incident/Corrective Action). The procedure for investigating and taking appropriate corrective actions of non-conforming work are described in Section 14 – "Corrective Actions". Section 14.3 describes procedures for Technical Corrective Actions. Formal corrective action procedures must be followed for non-conforming work that could reoccur (beyond expected random QC failures) or where there is doubt about the laboratory's compliance to its own policies and procedures.

The investigation and associated corrective action of non-conforming work involving alleged violations of the company's Ethics and Data Integrity policies must follow the procedures outlined in Section 19 – "Data Integrity Investigations".

MASTER

The laboratory evaluates the significance of the non-conforming work, and takes corrective action immediately. The customer is notified if their data has been impacted and work recalled, where necessary. The laboratory allows the release of non-conforming data only with approval by the Director or Operations Manager, on a case-by-case basis. Non-conforming data is clearly identified in the final report (see Section 28 – "Reporting the Results").

The discovery of a nonconformance for results that have already been reported to the customer must be immediately evaluated for significance of the nonconformance, its acceptability to the customer, and determination of the appropriate corrective action.

As stated above, the management of non-conforming work is detailed in SOP 80.0009 (Incident/ Corrective Action), which is a Quality Assurance Dept. SOP and copies of which are located in all departments; SOP 80.0009 is applicable to situations where non-conforming work could reoccur or where there is doubt that the laboratory is in compliance with its own policies and procedures. Corrective action for routine, non- recurring exceedances can be documented on raw data worksheets, logbooks, e-mail or other documents (e.g. temperature logs).

12.3 Stop Work Procedures

Halting work, or subsequent resumption of work, is authorized by top management, the LIMS administrator, departmental supervisors or analysts in accordance with SOP 80.0009 (Incident/Corrective Action) or pertinent SOPs.

Personnel will notify top management of any nonconformances, per 80.0009 or pertinent SOPs. Management will review the significance of the nonconformance and develop a course of action. If data are questionable, client(s) will be notified, preferably within the hour, but definitely by close of business that day.

Should an investigation of a nonconformance indicate that its cause requires that use of method be limited until any necessary modifications are implemented, management will immediately notify affected personnel of the decision. The laboratory will hold relevant reports to clients pending the outcome of the review. The Quality Assurance Dept. will verify that the issue is resolved before work is allowed to resume; personnel will be notified by management accordingly. Management will document the incident, root cause and resolution using the corrective action procedures described in Section 14 – "Corrective Action".

The reporting of nonconformances involving alleged violations of the laboratory's Ethics and Data Integrity policies must be reported to the Quality Manager. Procedures described in Section 19– "Data Integrity Investigations" are followed".

MASTER

Section 13

IMPROVEMENT

(TNI V1:M2 - Section 4.10; ISO/IEC 17025/2005(E) - Clause 4.10)

It is the policy of the laboratory to improve the overall effectiveness of the laboratory's management system and this is accomplished by the implementation of the various aspects of the management system: Quality policy and objectives (Section 5 - "Management"); internal auditing practices (Section 17 - "Internal Audits"); the review and analysis of data (Section 27 - "Quality Assurance for Environmental Testing"); the corrective action (Section 14 - "Corrective Action") and preventive action (Section 15 - "Preventive Action") processes; and the annual management review of the quality management system (Section 18 - "Management Reviews") where the various aspects of the management/quality system are summarized and evaluated, and plans for improvement are developed.

MASTER

Section 14

CORRECTIVE ACTION
(TNI V1:M2 – Section 4.11; ISO/IEC 17025/2005(E) - Clause 4.11)

Corrective action is the action taken to eliminate the causes of an existing non-conformity, defect, or other undesirable situation, in order to prevent recurrence.

Deficiencies cited in incident reports, external assessments, internal quality audits, data reviews, customer feedback/complaints, control of nonconforming work or managerial reviews are documented and require corrective action. Corrective actions taken are commensurate with the magnitude of the problem and the degree of risk. All actions are documented.

14.1 General Procedure

The laboratory uses a database software program to document and track corrective actions (Incident Reports) in accordance with SOP 80.0009 (Incident/Corrective Action). This program is used to generate audit/code reports, which help management plan and assign priorities to corrective actions.

Employees are responsible for initiating incident reports, related corrective action (and also suggesting preventive action – see Section 15) on routine data reviews/activities where a nonconformance is found that could reoccur (beyond expected random QC failures) or where there is doubt about the compliance of the laboratory with its own policies and procedures, in accordance with SOP 80.0009. The Quality Assurance Dept. is responsible for monitoring and recording closure of the corrective action, per this SOP.

All deficiencies are investigated and a corrective action plan is developed and implemented if determined necessary. The implementation is monitored for effectiveness.

14.1.1 Cause Analysis

When failures due to systematic errors have been identified, the first step of the corrective action process starts with the initial investigation and determination of root cause(s) of the problem. A root cause investigation, which is a major tool for continuous process improvement, begins and ends with the question "Why did this deficiency occur". When a reason can no longer be identified then there is reasonable assurance that the cause has been isolated. Records are maintained in the database of nonconformances requiring corrective action to show that the root cause(s) was investigated, and include the results of the investigation.

Where there may be non-systematic errors and as such the initial cause is readily identifiable, or there are expected random failures (e.g. failed quality control), a formal root cause analysis is not performed and the process begins with selection and implementation of corrective action (also see Section 14.3 "Technical Corrective Actions").

Property of ESS LABORATORY MASTER

14.1.2 Selection and Implementation of Corrective Actions

Where uncertainty arises regarding the best approach for analysis of the cause of nonconformances that require corrective action, appropriate personnel will recommend corrective actions that are commensurate with the magnitude and risk of the problem and that will most likely eliminate the problem and prevent recurrence.

Management ensures that corrective actions are discharged by assigned personnel within the agreed upon time frame. The Quality Assurance Manager provides the necessary oversight by tracking progress.

14.1.3 Monitoring of Corrective Action

The Quality Assurance Manager will monitor implementation and documentation of the corrective action to assure that the corrective actions were effective. The Quality Assurance Manager will publish periodic status reports to top management, project managers and affected departmental managers, as well as Quality Assurance Dept. personnel, per SOP 80.0009. Normal expectation is to complete non-critical corrective action within thirty days. Critical corrective action is to be completed as soon as possible.

14.2 Additional Audits

Where the identification of nonconformances or departures from normal lab procedures cast doubt on the laboratory's compliance with its own policies and procedures, or on its compliance with the TNI or other regulatory Standards, the laboratory ensures that the appropriate areas of activity are audited in accordance with Section 17 - "Internal Audits" as soon as possible.

In many cases, the additional audits are follow-ups after the corrective action has been implemented to ensure it is effective. These are especially done when a serious issue or risk to the laboratory, or a repetitive nonconformance, have been identified.

14.3 Technical Corrective Action

Sample data associated with a failed quality control result are evaluated for the need to be reanalyzed or qualified. Unacceptable quality control results are documented, and if the evaluation requires cause analysis, the cause and solution are recorded (also see Section 12 - "Control of Nonconforming Environmental Testing Work").
Analysts routinely implement corrective actions for data with unacceptable QC measures. First level correction may include re-analysis without further assessment. If the test method SOP addresses the specific actions to take, they are followed. Otherwise, corrective actions start with assessment of the cause of the problem. Corrective actions shall be to a degree commensurate with the magnitude and the risk of the problem.

MASTER

Corrective action for non-systematic errors, or expected random failures not subject to formal incident reporting, are documented in the comments section of respective logbooks, per SOP 80.0040. Corrective actions for nonconformances that may reoccur (beyond expected random QC failures) or where there is concern that the laboratory is not in compliance with its own policies and procedures require that an Incident Report be completed (see Section 14.1).

Technical managers review Incident Reports and suggest improvements, alternative approaches and procedures, where needed.

If the data reported are affected adversely by the nonconformance, the affected data is clearly identified in the report and the customer is notified. If necessary, data will be recalled and a revised report meeting regulatory and client needs issued.

MASTER

Section 15

PREVENTIVE ACTION
(TNI V1:M2 – Section 4.12; ISO/IEC 17025/2005(E) - Clause 4.12)

Preventive action is a pro-active process to identify opportunities for improvement rather than a reaction to the identification of problems or complaints.

Preventive action includes, but is not limited to: Review of nonconformance (incident) report database entries; review of QC (control chart) data to identify quality trends; regularly scheduled (daily) staff meetings to ensure client needs are being met; review of client feedback to look for improvement opportunities; review of proficiency testing data to look for borderline issues; annual managerial reviews; and review of scheduled instrument maintenance.

When improvement opportunities are identified or if preventive action is required, action plans are developed, implemented and monitored to reduce the likelihood of the occurrence of nonconformities.

Procedures for preventive actions include the initiation of such actions and subsequent monitoring to ensure that they are effective. The implementation and record maintenance of preventive action activities is outlined in SOPs 80.0009 (Incident/Corrective Action) and 80.0035 (Internal Assessment).

All personnel have the authority to offer suggestions for improvements and to recommend preventive actions, however management is responsible for implementing preventive action.

MASTER

Section 16

CONTROL OF RECORDS

(TNI V1:M2 – Section 4.13; ISO/IEC 17025/2005(E) - Clause 4.13)

"Records" include all documents, such as this QA Manual and SOPs, data recordings that include annotations, such as daily refrigerator temperatures posted to a laboratory form, lists, spreadsheets, and analyst notes on a chromatogram. Records may be on any form of media, including electronic (a/k/a computer-resident) and hard copy. Records allow for the historical reconstruction of laboratory activities related to sample-handling and analysis. The terms "documents" and "records" are considered to be analogous.

The laboratory maintains a record system appropriate to its needs, records all laboratory activities, and complies with applicable standards or regulations as required. Records of original observations and derived data are retained to establish an audit trail. Records help establish factors affecting the uncertainty of the test and enable test repeatability under conditions as close as possible to the original.

16.1 Records Maintained

Records of all procedures to which a sample is subjected while in the possession of the laboratory are kept. The laboratory retains all original observations, calculations and derived data (with sufficient information to produce an audit trail), calibration records, personnel records and a copy of the test report, for a minimum of five years from generation of the last entry in the records. At a minimum, the following records are maintained by the laboratory to provide the information needed for historical reconstruction:

i) all raw data, whether hard copy or electronic, for calibrations, samples and quality control measures, including analysts' worksheets and data output records (chromatograms, strip charts, and other instrument response readout records);

ii) a written description or reference to the specific method(s) used, which includes a description of the specific computational steps used to translate parametric observations into a reportable analytical value (all pertinent Standard Operating Procedures);

iii) laboratory sample ID code;

iv) date of analysis;

v) time of analysis is always required if the regulatory holding time is stated in hours, or when time critical steps are included in the analysis (e.g., extractions and incubations);

vi) instrumentation identification and instrument operating conditions/parameters (or reference to such data);

vii) all manual calculations (including manual integrations);

Property of ESS LABORATORY
MASTER

viii) analyst's or operator's initials/signature or electronic identification;

ix) sample preparation, including cleanup, separation protocols, incubation periods or subculture, ID codes, volumes, weights, instrument printouts, meter readings, calculations, reagents;

x) test results (including a copy of the final report);

xi) standard and reagent origin, receipt, preparation, and use;

xii) calibration criteria, frequency and acceptance criteria;

xiii) data and statistical calculations, review, confirmation, interpretation, assessment and reporting conventions;

xiv) quality control protocols and assessment;

xv) electronic data security, software documentation and verification, software and hardware audits, backups, and records of any changes to automated data entries;

xvi) method performance criteria including expected quality control requirements;

xvii) proficiency test results;

xviii) records of demonstration of capability for each analyst;

xix) a record of names, initials, and signatures for all individuals who are responsible for signing or initialing any laboratory record;

xx) correspondence relating to laboratory activities for a specific project;

xxi) corrective action reports;

xxii) preventive action records;

xxiii) copies of internal and external audits including audit responses;

xxiv) copies of all current and historical laboratory SOPs, policies and *Quality Manuals*;

xxv) sample receiving records (including information on any interlaboratory transfers);

xxvi) sample storage records;

xxvii) data review and verification records;

xxviii) personnel qualification, experience and training records;

MASTER

xxvIv) archive records; and

xxviv) management reviews.

16.2 Records Management and Storage

The laboratory maintains a record management system for control of laboratory notebooks, instrument logbooks, standards logbooks, and records for data reduction, validation, storage, and reporting, per SOPs 80.0040 (Logbooks), 70.0004 (Work Order Management), 70.0007 (Data Entry & Data Reporting) and 70.0008 (Sample Login). Hard copy data is recorded immediately and legibly in permanent ink while data generated by automated data collections systems are recorded electronically per SOP 80.0040 and various test SOPs. Hard copy corrections are initialed and dated with the reason noted for corrections other than transcription errors. A single line strikeout is used to make corrections so that the original record is not obliterated. In the case of electronic records, software audit tracking features provide an audit trail and notes may be added to electronic document fields, as required by SOP 80.0040 and various test SOPs.

All laboratory data is saved to computer systems which are networked to a Windows 2012 R2 server, which is the destination of all files. A differential back-up is performed nightly; weekly backups are differential, and monthly backups are full. We keep daily backups for 7 days, weekly backups for 7 weeks and monthly backups indefinitely.

Records, including electronic records, are easy to retrieve, legible, and protected from deterioration, computer viruses or damage; held secure and in confidence; and are available to accrediting bodies for a minimum of five years or as required by regulation or contract. Records that are stored only on electronic media are supported by the hardware and software necessary for their retrieval. Access to protected records is limited to employees on a need to know basis, as determined by the laboratory director, to prevent unauthorized access or amendment. Access is password protected. Individual user names and passwords are required for all LIMS users.

Additional information regarding control of data is included in Section 22.5 - "Control of Data".

Procedures for identification, collection, indexing, access, filing, storage, maintenance and disposal of quality and technical records are found in the SOPs listed above and also in SOPs 80.0012 (Document Control) and 80.0029 (Management of Procedure Documents). Quality records shall include reports from internal audits and management reviews as well as records of corrective and preventive actions. Electronic storage is the primary medium for long-term storage of vital records.

Archived information and access logs are protected against fire, theft, loss, environmental deterioration, vermin, and in the case of electronic records, electronic or magnetic sources. Archived records have limited access and are

MASTER

checked out through an access log. Electronic and hard copy records are archived onsite.

In the event that the laboratory transfers ownership or goes out of business, records are maintained or transferred according to client instructions. Appropriate regulatory and state legal requirements concerning laboratory records shall be followed.

16.3 Legal Chain of Custody Records

Evidentiary sample data are used as legal evidence. Procedures for evidentiary samples can be found in SOPs 10.0001, 10.0017 and the Sample Acceptance Policy.

A sample is in someone's custody if;

1. It is in one's actual physical possession;
2. It is in one's view, after being in one's physical possession;
3. It is in one's physical possession and then locked up so that no one can tamper with it;
4. It is kept in a secured area, restricted to authorized personnel only.

MASTER

Section 17

AUDITS

(TNI V1:M2 - Section 4.14; ISO/IEC 17025/2005(E) - Clause 4.14)

Audits measure laboratory performance and verify compliance with the TNI, ISO 17025 and other regulatory Standards, and accreditation/ certification and project requirements. Audits specifically provide management with an on-going assessment of the management system. They are also instrumental in identifying areas where improvement in the management/quality system will increase the reliability of data. Audits are of four main types: internal, external, performance, and system. Section 17.5 discusses the handling of audit findings.

17.1 Internal Audits

Annually, the laboratory prepares a schedule of internal audits to be performed during the year. These audits verify compliance with the requirements of the management/quality system, including analytical methods, SOPs, the *Quality Manual*, ethics policies, data integrity, other laboratory policies, and the TNI/ISO 17025 Standards. Annual internal audits are carried out per SOP 80.0035.

It is the responsibility of the Quality Manager to plan and organize audits as required by the schedule and requested by management. These audits are carried out by trained and qualified personnel who are independent of the activity to be audited. The laboratory director shall determine the training and qualification requirements for audit personnel, including quality managers, and shall establish procedures to ensure that audit personnel have the necessary education or experience required for their assigned positions. These requirements and procedures must be recorded. Personnel conducting independent assessments shall have sufficient authority, access to work areas, and organizational freedom necessary to observe all activities affecting quality and to report the results of such assessments to laboratory management.

In addition to the scheduled internal audits, it may sometimes be necessary to conduct special audits as a follow-up to corrective actions, PT results, complaints, regulatory audits or alleged data integrity issues. These audits address specific issues.

The area audited, the audit findings, and corrective actions are recorded. Audits are reviewed after completion to assure that corrective actions were implemented and effective. If findings are observed that cast doubt on the validity of results, top management shall be informed immediately, the incident documented and timely corrective action implemented per Sections 12, 14 and 17.5, which includes notification of clients, when data is impacted.

17.2 External Audits

MASTER

It is the laboratory's policy to cooperate and assist with all external audits, whether performed by clients or an accrediting body. Management ensures that all areas of the laboratory are accessible to auditors as applicable and that appropriate personnel are available to assist in conducting the audit.

17.2.1 Confidential Business Information (CBI) Considerations

During on-site audits, on-site auditors may come into possession of information claimed as business confidential. A business confidentiality claim is defined as "a claim or allegation that business information is entitled to confidential treatment for reasons of business confidentiality or a request for a determination that such information is entitled to such treatment." When information is claimed as business confidential, the laboratory must place on (or attach to) the information at the time it is submitted to the auditor, a cover sheet, stamped or typed legend or other suitable form of notice, employing language such as "trade secret", "proprietary" or "company confidential". Confidential portions of documents otherwise non-confidential must be clearly identified. CBI may be purged of references to client identity by the responsible laboratory official at the time of removal from the laboratory. However, sample identifiers may not be obscured from the information.

17.3 Performance Audits

Performance audits may be Proficiency Test Samples, internal single-blind samples, double-blind samples through a provider or client, or anything that tests the performance of the analyst and method.

Proficiency Test Samples are discussed in Section 27 – "Quality Assurance for Environmental Testing".

17.4 System Audits

The Laboratory's management system is audited through Quality Dept. annual systems audits and annual management reviews. Refer to Section 18 – "Management Reviews" for further discussion of management reviews.

17.5 Handling Audit Findings

Internal or external audit findings are responded to within the time frame agreed to at the time of the audit. The response may include action plans that could not be completed within the response time frame. A completion date is established by management for each action item and included in the response.

Development and implementation of corrective actions to findings is the responsibility of the Quality Assurance Manager. Corrective actions are documented through the corrective action process described in Section 14 – "Corrective Actions".

MASTER

Audit findings that cast doubt on the effectiveness of the laboratory operation to produce data of known and documented quality or that question the correctness or validity of sample results must be investigated. Corrective action procedures described in Section 14 – "Corrective Action" must be followed. Clients must be notified in writing if the investigation shows the laboratory results have been negatively affected and the client's requirements have not been met. The client must be notified by close of business on the day the laboratory discovers the issue. Laboratory management will ensure that this notification is carried out within the specified time frame.

All investigations that result in findings of inappropriate activity are documented and include any disciplinary actions involved, corrective actions taken, and all appropriate notifications of clients. See Section 19 (Data Integrity Investigation) for additional procedures for handling inappropriate activity.

MASTER

Section 18

MANAGEMENT REVIEWS
(TNI V1:M2 – Section 4.15; ISO/IEC 17025/2005(E) - Clause 4.15)

Top management reviews the management system on an annual basis and maintains records of review findings and actions.

18.1 Management Review Topics

The following are reviewed to ensure their suitability and effectiveness:

- the suitability of policies and procedures;
- reports from managerial and supervisory personnel;
- the outcome of recent internal audits;
- corrective and preventive actions;
- assessments by external bodies;
- the results of interlaboratory comparisons or proficiency tests;
- changes in the volume and type of the work;
- customer feedback;
- complaints;
- recommendations for improvement;
- other relevant factors, such as quality control activities, resources, and staff training.

18.2 Procedure

The procedure for management review is included in SOP 80.0035 (Internal Assessment).

Findings and follow-up actions from management reviews are recorded. Management will determine appropriate completion dates for action items and ensures they are completed within the agreed upon time frame.

MASTER

Section 19

DATA INTEGRITY POLICY & DATA INTEGRITY INVESTIGATIONS
(TNI V1:M2 – Section 4.16; ISO/IEC 17025/2005(E) - Clause 4.16)

ESS Laboratory is committed to ensuring the integrity of its data and providing valid data of known and documented quality to its clients. Top management endorses its support for data integrity by implementing the specific requirements of the laboratory's data integrity program. The elements in ESS Laboratory's Ethics and Data Integrity program include:

- Documented data integrity procedures, signed and dated by top management,
- Documented data integrity training,
- An Ethics and Data Integrity Training Agreement signed by all management and staff, at the time of hire and annually thereafter following annual data integrity training. This Ethics Agreement includes a requirement that all suspected violations of the policy be reported to senior management.
- Procedures for confidential reporting of alleged data integrity issues, handling data integrity investigations and client notifications,
- An audit program that addresses in-depth, periodic monitoring of data integrity (see Section 17 – "Audits"). The Quality Assurance Manager has the responsibility of overseeing the Ethics and Data Integrity program.

19.1 Ethics and Data Integrity Procedures

The Ethics and Data Integrity Policy provides an overview of the program. Written procedures that are considered part of the Ethics and Data Integrity program include:

- Manual integration procedures (SOP 110.0016)
- Corrective action procedures (Section 14 of this QA Manual)
- Procedures for Data Integrity Investigations are detailed below.
- Data recall procedures (Section 14 of this QA Manual)
- Data Integrity training procedures are detailed below and in SOP 80.0049.

Management reviews data integrity procedures yearly and updates these procedures as needed.
These procedures and the associated implementation records are properly maintained and made available for assessor review.

19.2 Training

Data integrity training is provided as a formal part of new employee orientation and a refresher is given annually for all employees; in the latter case, such training may be asynchronous* (see below). Employees are required to understand that any infractions of the laboratory data integrity procedures shall result in a detailed investigation that could lead to very serious consequences including immediate

MASTER

termination, debarment or civil/criminal prosecution. This is discussed in the Ethics and Data Integrity Policy that every employee is required to sign at the time of hire. Attendance for required training is monitored through a signature attendance sheet demonstrating all staff have participated and understand their obligations related to data integrity.

An agenda is provided to each trainee prior to the training session. The following topics and activities are covered:

- the organizational mission and its relationship to the need for honesty and full disclosure in all analytical reporting;
- An ethics policy must be read and signed by all personnel;
- how and when to report data integrity issues;
- recordkeeping;
- Analysts must record an explanation and sign off on all manual changes to data; and
- Where available in the instrument software, all electronic tracking and audit functions must be enabled.
- discussion regarding all data integrity procedures;
- data integrity training documentation;
- in-depth data monitoring;
- data integrity procedure documentation;
- improper data manipulations (detailed in SOP 80.0049);
- adjustments of instrument time clocks;
- inappropriate changes in concentrations of standards;
- the importance of proper written narration on the part of the analyst with respect to those cases where analytical data may be useful, but are in one sense or another partially deficient;
- written ethics agreements;
- examples of improper practices (detailed in SOP 80.0049);
- examples of improper chromatographic manipulations (detailed in SOPs 80.0049 and 110.0016);
- requirements for external ethics program training;

MASTER

- any external resources available to employees; and
- consequences for data integrity infractions.

*Asynchronous training online tools enable communication and collaboration over a period of time through a "different time-different place" mode. These tools allow people to connect together at each person's own convenience and own schedule. Asynchronous tools are useful for sustaining dialogue and collaboration over a period of time and providing people with resources and information that are instantly accessible, day or night.

When contracted technical or support personnel are used, top management is responsible for ensuring that they are trained to the laboratory's management system and data integrity procedures, competent to perform the assigned tasks, and appropriately supervised.

Topics covered are provided in writing and provided to all trainees.

19.3 Confidential Reporting of Ethics and Data Integrity Issues

Confidential reporting of data integrity issues is assured as follows: A data integrity officer/advisor/ombudsman shall be appointed by senior management to determine the need for a detailed investigation when data integrity is in question. This will normally be the Quality Assurance Manager. The data integrity officer shall insure confidentiality and a receptive environment in which to privately discuss personal ethical dilemmas with staff or observed unethical practices by others. Confidential records of such discussions shall be kept by the data integrity advisor, who will keep top management informed of the need for any further detailed investigation.

19.4 Investigations

All investigations resulting from data integrity issues are conducted confidentially. They are documented and notifications are made to clients who received any negatively affected data that did not meet the client's data quality requirements. Procedures for investigation are included in SOP 80.0049.

MASTER

Section 20

PERSONNEL
(TNI V1:M2–Section 5.2; ISO/IEC 17025/2005(E)-Clause 5.2)

ESS Laboratory employs competent personnel based on education, training, experience and demonstrated skills, as required. The laboratory's organization chart can be found in Appendix B.

20.1 Overview

All personnel are responsible for complying with all quality and data integrity policies and procedures that are relevant to their area of responsibility.

All personnel who are involved in activities related to sample analysis, evaluation of results or who sign test reports, must demonstrate competence in their area of responsibility. Appropriate supervision is given to any personnel in training and the trainer is accountable for the quality of the trainee's work. Personnel are qualified to perform the tasks for which they are responsible based on education, training, experience and demonstrated skills as required for their area of responsibility.

The laboratory management provides goals with respect to education, training and skills of laboratory staff. These goals are outlined in the ESS Policy Manual (Job Descriptions) and SOP 80.0016 (Training). Training needs are identified at the time of employment and when personnel are moved to a new position, or new responsibilities are added to their job responsibilities; appropriate training is provided. Ongoing training, as needed, is also provided to personnel in their current jobs. The effectiveness of the training must be evaluated before the training is considered complete.

Contracted personnel, when used, must meet the same competency standards and follow the same policies and procedures that laboratory employees must meet.

20.2 Job Descriptions

Job descriptions are available for all positions that manage, perform, or verify work affecting data quality, and are located in the ESS Laboratory Policy Manual (Job Descriptions). An overview of top management's responsibilities is included in Section 5 - "Management".

Job descriptions include the specific tasks, minimum education and qualifications, skills, and experience required for each position.

20.3 Training

MASTER

All personnel are appropriately trained and are competent in their assigned tasks before they contribute to functions that can affect data quality. It is management's responsibility to assure personnel are trained in accordance with SOP 80.0016 (Training). Training records are used to document management's approval of personnel competency. The date on which authorization and/or competence is confirmed is included.

Training records are maintained by the Quality Assurance Manager and include safety training certificates. The latter are also kept in an online database by the corporate safety manager.

20.3.1 Training for New Staff

New staff members are given the following training, per SOP 80.0016 (Training Process):

Orientation (General Policies, Ethics and Data Integrity Agreement, Good Documentation and SOP/QA Manual training plan checklist), Initial Demonstrations of Capability, specialized training and formal safety training.

All new staff members are given introductory training and orientation upon arrival. The training is documented on training forms that outline what was covered during the training. The new employee also receives Data Integrity training and must sign-off on the Ethics and Data Integrity Policy.

The initial training for a new task contains the following steps:

- All documentation involved with a new and unfamiliar task is read and understood by the trainee.
- Training is under the direct supervision of a qualified senior analyst. During the time the trainee is in training, he/she may sign laboratory notebooks, logbooks, worksheets, etc., but they must be co-signed by the trainer, who is responsible for the data generated.
- The trainee demonstrates competency in the new task before they can operate independently. The competency for a test method is accomplished by a demonstration of capability as defined in Section 22 – "Environmental Methods and Method Validation". Approval of competency is noted by the date and initials or signature of the Technical Manager and Quality Assurance Manager on a training form.
- Each step of the training process is documented.
- The documentation is maintained in the employees training record.

Part-time, temporary, contracted and administrative personnel are trained, at a minimum, in the basic quality assurance and health and safety programs.

Property of ESS LABORATORY
MASTER

20.3.2 Ongoing Training

Staff members are given the following ongoing training:

- Annual Data Integrity per SOP 80.0049
- Annual QA Manual for current revision
- Annual Continuing Demonstration of Capability per Appendix H.2 of this manual and SOP 80.0016
- Annual Safety (Corporate, online)
- Any pertinent specialized training

MASTER

Section 21

ACCOMODATIONS AND ENVIRONMENTAL CONDITIONS
(TNI V1:M2 – Section 5.3)

21.1 Environmental

The laboratory facility is designed and organized to facilitate correct testing of environmental samples. Environmental conditions are monitored to ensure that conditions do not invalidate results or adversely affect the required quality of any measurement. Such environmental conditions include lighting, energy sources, humidity, voltage, temperature, atmospheric cross-contaminants (via storage blanks) and vibration levels which could affect balance operation.

If the laboratory environment is required to be controlled by a method or regulation, the adherence is recorded. An example would be the recording of temperature during TCLP extraction.

Environmental tests are stopped when the environmental conditions jeopardize the results.

When conducting external sampling procedures, any mobile equipment such as pH meters or ISCO samplers are only operated under the environmental conditions for which they were designed and in accordance with pertinent SOPs.

21.2 Work Areas

Work areas may include access and entryways to the laboratory, sample receipt area, sample storage area, sample process area, instrumental analysis area, chemicals, gas cylinders and waste storage area, and data handling and storage area.

Access to, and use of, areas affecting the quality of the environmental tests is controlled by restriction of areas to authorized personnel only. See Section 21.4 below.

The laboratory work spaces are adequate for their use, and appropriately clean to support environmental testing and ensure an unencumbered work area.

Laboratory space is arranged to minimize cross-contamination between incompatible areas of the laboratory. Prep labs are isolated from instrumental analysis labs; samples suspected of containing high concentrations of volatile analytes shall be isolated from other samples. Refrigerator storage and Trip Blanks shall be used to determine if cross-contamination may have occurred. Laboratory temperature/humidity/ ventilation are controlled via separate, dedicated HVAC units.

MASTER

Testing occurs only within dedicated laboratory departments. Laboratory space is maintained and monitored to the specifications required for laboratory space and the testing performed. Electronic balances are located away from drafts and doorways and mounted on a marble slab in areas where their use is affected by vibrations. Neighboring test areas of incompatible activities are effectively separated. Specific work areas are defined and access is controlled. (Only authorized laboratory personnel and escorted signed-in visitors may enter the work area.)

Good housekeeping measures are employed to avoid the possibility of contamination. The laboratory procedure for good housekeeping includes such measures as:

- janitorial service (internal) is in operation.
- each employee is responsible for keeping their work area clean and tidy.
- A kitchen area, isolated from the testing labs, is the only place where eating/drinking is allowed.
- Smoking is prohibited in the laboratory. Employees are not allowed to wear cologne, perfumes or other personal care products that might contaminate the samples for volatile organics. Live plants and animals are prohibited in the laboratory area.

21.3 Floor Plan

A floor plan can be found in Appendix C.

21.4 Building Security

The laboratory is a secure (locked) facility, accessible to authorized personnel only and is kept secure during off hours with an alarm system.

A Visitor's Logbook is maintained for every visitor to sign in and out. Visitors must be accompanied by laboratory personnel when in secure areas.

Signs are used to designate secure areas.

Security procedure is described in SOP 110.0015 (Lab Security).

MASTER

Section 22

ENVIRONMENTAL METHODS AND METHOD VALIDATION

(TNI V1:M2 – Section 5.4; TNI V1:M4 - Sections 1.4, 1.5 and 1.6; and ISO/IEC 17025/2005(E)-Clause 5.4)

Methods and/or procedures are available and are used for all activities associated with the sampling, handling, transport, storage and analysis of the sample including preparation and testing. For purposes of this Section, "method" refers to both the sample preparation and determinative methods. A master list of analytical methods is located in Appendix D.

Before being put into use, a test method is confirmed by a demonstration of capability or method validation process.

All methods are published or documented. Deviations from the methods are allowed only if the deviation is documented, technically justified, authorized by management and accepted by the customer

22.1 Method Selection

A reference method is a method issued by an organization generally recognized as competent to do so (when ISO refers to a standard method, that term is equivalent to reference method). When a laboratory is required to analyze a parameter by a specified method due to a regulatory requirement, the parameter/method combination is recognized as a reference method.

The laboratory will use methods that meet the needs of the customer. Such methods will be based on the latest edition of the method unless it does not meet the needs of the customer.

The laboratory selects methods that are appropriate to the customer needs. When the regulatory authority mandates or promulgates methods for a specific purpose, only those methods will be used.

If a method proposed by a customer is considered to be inappropriate or out-of-date, the customer is informed and the issue resolved before proceeding with analysis of any samples (see Section 7 – Review of Requests, Tenders and Contracts).

If a method is not specified by the customer or is inappropriate, a method appropriate to the end use of the data will be selected using the process outlined below.

- If the data are to be submitted to a regulatory authority, the method(s) specified by the regulatory authority will be used.

MASTER

- For drinking water compliance a method will be selected from those specified in 40 CFR Part 141, or the applicable state regulations.
- For NPDES permits, the method will be selected from those specified in 40 CFR Part 136.
- If the end use of the data is not regulatory or if the regulatory authority does not specify a method, the laboratory will determine the customer needs in terms of reporting level (e.g., LOD, LLOQ), bias (e.g., screening versus quantitative) and the laboratory capabilities and capacity. Based on these criteria, the laboratory will select an appropriate method based on the following hierarchy:
  - Resources published in regional, national or international standards
  - Methods published by other technical organizations such as ASTM, Standard Methods, NIOSH or AOAC
  - Methods develop by the instrument manufacturer
  - Laboratory-developed methods.

The customer will be informed of the selected method and must approve its use before being used to report data.

All communications between the laboratory and the customer are documented.

22.2 Non-Standard and Laboratory-Developed Methods

If the laboratory develops a method, the process of designing and validating the method is carefully planned and documented. All personnel involved in the method design, development and implementation will be in constant communication during all stages of development.

The procedure for methods development and validation is outlined below and in SOP 80.0024.

22.3 Method Validation

Validation is the confirmation, by examination and objective evidence, that the particular requirements for a specific intended use are fulfilled.

At a minimum, reference methods are validated by performing an initial demonstration of capability. Additional requirements are discussed for each technology.

Uncontrolled Document
Property of ESS LABORATORY
MASTER

All methods that are not reference methods are validated before use. The validation is designed so that the laboratory can demonstrate that the method is appropriate for its intended use. All records (e.g., planning, method procedure, raw data and data analysis) shall be retained while the method is in use. Based on the validation process, the laboratory will make a statement of the intended use requirements and whether or not the validated method meets the use requirements, in a specific Process Validation Protocol form per SOP 80.0024. The form will be filed in the QA Dept.

Method validation and Demonstration of Capability procedures can be found in:

- Appendix H.1 – Chemistry
- Appendix H.2 – Demonstration of Capability

22.4 Estimation of Analytical Uncertainty

Analytical Uncertainty: A subset of Measurement Uncertainty that includes all laboratory activities performed as part of the analysis.

When requested, the laboratory will provide an estimate of the analytical uncertainty, using quality control measurement data, as determined by SOP 110.0014:

a) The exact nature of some test methods may preclude rigorous, statistically valid estimation of analytical uncertainty. In these cases the laboratory shall attempt to identify all components of analytical uncertainty and make a reasonable estimation, and shall ensure that the form of data reporting does not give a wrong impression of the uncertainty. A reasonable estimation shall be based on knowledge of method performance and previous experience. When estimating the analytical uncertainty, all uncertainty components which are of importance in the given situation shall be taken into account.

b) In those cases where a well-recognized test method specifies limits to the values of the major source of uncertainty of measurement and specifies the form of presentation of calculated results, the laboratory is considered to have satisfied the requirements on analytical uncertainty by following the test method and reporting instructions.

c) The laboratory is only responsible for estimating the portion of measurement uncertainty that is under its control. Test reports shall include a statement of the estimated analytical uncertainty only when required by the customer. If a project requires analytical uncertainty to be reported, the laboratory shall report the estimated uncertainty based on project-specific procedures or, if not available, any other scientifically valid procedures.

The estimated analytical uncertainty can be expressed as a range (±) around the reported analytical results at a specified confidence level. A laboratory may report the in-house, statistically-derived LCS control limits based on historical LCS recovery data as an estimate of the minimum laboratory contribution to analytical

MASTER

uncertainty at a 99% confidence level. For testing laboratories, the laboratory shall ensure that the equipment used can provide the analytical portion of measurement uncertainty needed by the customer.

22.5 Control of Data

To ensure that data are protected from inadvertent changes or unintentional destruction, the laboratory establishes and uses procedures to check calculations and data transfers (both manual and automated).

22.5.1 Computer and Electronic Data Requirements

The laboratory assures that computers, user-developed computer software, automated equipment, or microprocessors used for the acquisition, processing, recording, reporting, storage, or retrieval of environmental test data are:

- documented in sufficient detail and validated as being adequate for use;
- protected for integrity and confidentiality of data entry or collection, data storage, data transmission and data processing;
- maintained to ensure proper functioning and are provided with the environmental and operating conditions necessary to maintain the integrity of environmental test data; and
- held secure including the prevention of unauthorized access to, and the unauthorized amendment of, computer records. Data archive security is addressed in Section 16 – "Control of Records" and building security is addressed in Section 21- "Accommodations and Environmental Conditions".

The laboratory director controls access to all programs that are used to acquire, process, record or report data. All programs have limited access and capabilities. All programs are password-protected or are protected by electronic ID. Each employee is granted access only to those programs that he or she uses, depending on his/her responsibilities and job description. Each employee is provided with an ID with electronic information unique to that individual. The ID must be read by the card reader before any employee can input bar-coding data. Passwords are unique to the individual, and cannot be shared. A programmer is given access to change the underlying code, but may not access or modify any data entry. A reviewer may review the data input, and may change entries only when a second reviewer concurs with the modification. Analysts input data, and have an opportunity to check data entries before permanently saving them. After the data has been saved, modifications may be made only with the authorization of the supervisor. Validators may only review data and assign any validation codes necessary to help interpret the data. Once the data have been reviewed, the technical manager authorizes the data for release to the client. The technical manager

Property of ESS LABORATORY
MASTER

may not change data, but may alert the applicable supervisor and analyst of any errors.

The laboratory uses spreadsheets to calculate final results from the raw data, per the test methods. Before reporting any results derived from these programs, the laboratory validates the underlying calculations per SOP 80.0047 (Computer Review & Validation).

After the spreadsheet is validated, the calculations are protected from inadvertent manipulations by access limitation, as described above. If any changes are made to the spreadsheet program, the laboratory revalidates the entire system before reporting results.

Data from all electronic media are backed up and backed up copies are stored as described in Section 16, to ensure that data are not lost.

22.5.2 Data Reduction

The analyst calculates final results from raw data, or appropriate computer programs provide the results in a reportable format. The test methods provide required concentration units, calculation formulas and any other information required to obtain final analytical results. As a part of the management system, the laboratory ensures that all manual calculations are checked by another individual (when possible) at a rate of one per project of all calculations. In addition all data transfers (data entry, transcribing raw or calculated data, etc.) will be similarly spot-checked for checked for accuracy. If checked values are found to be incorrect, the laboratory will recheck all entries. In addition, if the errors are attributed to one individual, 100% of the work done by the individual will be checked until the work is error-free.

The laboratory has a manual integration procedure, SOP 110.0016 (Manual Integration Policy & Procedure) that must be followed when integrating peaks during data reduction. This SOP is available to analysts in all departments where manual integration may be necessary.

The laboratory will report numerical data to three significant figures unless required to do otherwise by regulations.

All raw data must be retained electronically and it is maintained as described in Section 16 – "Control of Records".

22.5.3 Data Review Procedures

Data review procedures are located in Section 27.4 – "Data Review".

MASTER

Section 23

CALIBRATION REQUIREMENTS

(TNI V1:M2 – Section 5.5; TNI V1:M4 - Section 1.7; ISO/IEC 17025/2005(E) - Clause 5.5)

23.1 General Equipment Requirements

The laboratory provides all the necessary equipment required for the correct performance of the scope of environmental testing performed by the laboratory.

All equipment and software used for testing and sampling are capable of achieving the accuracy required for complying with the specifications of the environmental test methods as specified in the laboratory SOPs.

Equipment is operated only by authorized and trained personnel (see Section 20 – "Personnel").

The laboratory has procedures for the use, maintenance, handling, transportation and storage of equipment and they are readily available to laboratory personnel. Manuals provided by the manufacturer of the equipment provide information on use, maintenance, handling and storage of the equipment. The laboratory maintains an inventory of equipment that includes additional information on storage location. Table 23-5 (below) summarizes planned equipment maintenance. These procedures ensure proper functioning of the equipment and prevent contamination or deterioration.

All equipment is calibrated or verified before being placed in use to ensure that laboratory specifications and relevant standard specifications are met, per SOPs 20.0003, 30.0002, 40.0036, 50.0002 (Balance Calibration SOPs), 110.0005 (Volumetric Ware Calibration) and 110.0010 (Thermometer Calibration). Completed forms and related raw data are kept in the laboratory department electronic files, except for SOP 110.0010 which is maintained in the QA Department files.

Test equipment, including hardware and software, are safeguarded from adjustments that would invalidate the test result measurements by limiting access to the equipment (see Section 21-4 – "Building Security") and using password protection where possible (see Section 22-5 – "Control of Data").

Equipment that has been subject to overloading, mishandling, that has given suspect results, or shown to be defective or outside specifications is taken out of service. The equipment is isolated to prevent its use or clearly labeled as being out of service until it has been shown to function properly. If it is shown that previous tests are affected, then procedures for nonconforming work are followed and results are documented (see Section 12 – "Control of Nonconforming Environmental Testing Work" and Section 14 – "Corrective Action").

MASTER

Should equipment be needed for a test that is outside of permanent control of the laboratory, the lab ensures the equipment meets the requirements of this manual by inspecting or otherwise testing, before use.
When using external calibration services, traceability of measurement shall be assured by the use of calibration services from laboratories that can demonstrate competence, measurement capability and traceability. The calibration certificates issued by these laboratories shall contain:

1. the measurement results, including the conditions (e.g. environmental) under which the calibrations were made that have an influence on the measurement results;

2. the measurement uncertainty and/or a statement of compliance with an identified metrological specification (when a statement of compliance with a specification is made omitting the measurement results and associated uncertainties, the laboratory shall record those results and maintain them for possible future reference);

3. When an instrument for calibration has been adjusted or repaired, the calibration results before and after adjustment or repair, if available, shall be reported;

4. A calibration certificate (or calibration label) shall not contain any recommendation on the calibration interval except where this has been agreed with the customer;

5. The calibration certificate shall relate only to quantities and the results of functional tests. If a statement of compliance with a specification is made, this shall identify which clauses of the specification are met or not met; this requirement may be superseded by legal regulations;

6. When opinions and interpretations are included, the laboratory shall document the basis upon which the opinions and interpretations have been made. Opinions and interpretations shall be clearly marked as such in a test report;

7. When a calibration has been subcontracted, the laboratory performing the work shall issue the calibration certificate to the contracting laboratory.

Each item of equipment and software used for testing and significant to the results is uniquely identified. Records of equipment and software are maintained in the Equipment Inventory (a controlled document kept in the QA Dept. files and made available to interested parties), equipment validation records, maintenance records and various testing SOPs. This information includes the following:

a) identity of the equipment and its software;

b) manufacturer's name, type identification, serial number or other unique identifier;

c) checks that equipment complies with specifications of applicable tests;

d) current location;

MASTER

e) manufacturer's instructions, if available, or a reference to their location;

f) dates, results and copies of reports and certificates of all calibrations, adjustments, acceptance criteria, and the due date of next calibration;

g) maintenance plan where appropriate, and maintenance carried out to date; documentation on all routine and non-routine maintenance activities and reference material verifications;

h) any damage, malfunction, modification or repair to the equipment;

i) date received and placed into service

j) condition when received (new, used, reconditioned)

k) operational status; and

23.2 Support Equipment

Support Equipment includes, but is not limited to: balances, weights, ovens, refrigerators, freezers, incubators, water baths, temperature measuring devices, volumetric/non-volumetric dispensing devices, water purification system, radiation monitors and thermal/pressure sample preparation devices.

All support equipment is maintained in proper working order. Electronic records are kept for all repair and maintenance activities, including service calls, per SOP 40.0040 (Logbook Use and Control).

All raw data records are retained to document equipment performance. These records include logbooks, data sheets, or equipment computer files.

Regular maintenance of support equipment, such as balances and fume hoods is conducted at least annually. Fume hood air flow is checked at least monthly.

Maintenance on other support equipment, such as ovens, refrigerators, and thermometers is conducted on an "as needed" basis.

Records of maintenance to support equipment are documented in Instrument Maintenance Logs. Each piece of support equipment does not necessarily have its *own* logbook but is documented. Maintenance logbooks may be shared with equipment that is housed in the same laboratory area. See also Tables 23-2 below.

Table 23-2 Summary of Support Equipment Calibration And Maintenance

Instrument	Activity	Frequency	Documentation
Balance	1. Clean (check before use) 2. Check alignment 3. Service Contract	1. After use 2. Before use 3. Annually	Worksheet/log book Post annual service date on balance

MASTER

Table 23-2 Summary of Support Equipment Calibration And Maintenance			
Instrument	**Activity**	**Frequency**	**Documentation**
ASTM Class 1 Weights	1. Only use for the intended purpose 2. Use plastic forceps to handle 3. Keep in case 4. Re-calibrate	Re-calibrate every 5 years	Certificate of Calibration from ISO/IEC 17025 accredited calibration laboratory
NIST Traceable Thermometer	Accuracy determined by established calibration laboratory using NIST traceable equipment and procedures.	At purchase and then annually	Certificate of Calibration
Thermometers: 1. Glass and electronic 2. Dial thermometers 3. IR thermometer	Check at the temperature used, against a reference NIST certified thermometer	1. Annually for glass 2. Quarterly for electronic and IR thermometers	ID, Calibration factor and date of calibration on worksheet/log book ID'd thermometer stickered with initials/ date of calibration.
pH electrometers	Calibration: 1. pH buffer aliquots are used only once 2. Buffers used for calibration will bracket the pH of the media, reagent, or sample tested.	Before use	Log book
pH probe	Maintenance: Per manufacturer's recommendations	As needed	Log book
Photometer	1. Keep cells clean 2. Service contract. Check wavelength settings with color standards	Annually	Certificate of Calibration. Post service date on instrument
Automatic or digital type pipettes	Calibrate for accuracy and precision per SOP 110.0005	Weekly	Log book
Refrigerators, Freezers, and BOD incubator.	1. Thermometers are immersed in liquid. 2. The thermometers are graduated in increments of 1°C or less	Temperatures are recorded twice each day in use Digital Min/Max temp record for weekend/holidays	Worksheet/log book Refrigerators: 0°C to 6°C Freezers: ≤-10°C
DO electrometer	Calibrate as specified in SOP	Before use	Log book
DO probe	Maintenance as specified by manufacturer	As needed	Log book
Conductivity Meter	Maintenance as specified by manufacturer	When more than 5% drift	Log book

MASTER

Water purification system and radiation monitor are checked daily prior to use, per SOPs 110.0003 (Water System Testing) and 10.0010 (Radiation Monitor Operation).

23.2.2 Support Equipment Calibration

All support equipment (except for weights) is calibrated or verified at least annually over the entire range of use using NIST traceable references where available. The results obtained from the calibration of support equipment needs to meet requirements found in Tables 23-3, or (1) the equipment is removed from service until repaired, or (2) records are maintained of correction factors to correct all measurements. If correction factors are used this information is clearly marked on or near the equipment.

Support equipment such as balances, ovens, refrigerators, freezers, and water baths are verified with a NIST traceable reference, if available, each day prior to use, to ensure operation is within the expected range for the application for which the equipment is to be used.

Volumetric dispensing devices are checked for accuracy per SOP 110.0005 (Volumetric Ware Calibration) to meet TNI & ISO 17025 Standards criteria. See also Table 23-3 below.

MASTER

Table 23-3 Calibration Verification Acceptance Criteria for Support Equipment

Equipment	Type of Calibration/ Number of Standards	Frequency	Acceptance Limits	Corrective Action
Balances	Accuracy determined using A2LA-accredited NIST weights, which are verified every 5 years. Minimum of 2 weights bracketing the range of interest. Inspected and adjusted annually by a qualified service person.	Daily prior to use	± 0.2% (TNI) Top-loading balance: ±2% or ±0.02g, whichever is greater Analytical balance: ±0.1% or ±0.5 mg, whichever is greater.	Clean, check level, insure lack of drafts, and that unit is warmed up, recheck. If fails, call service.
Thermometer	Against NIST-traceable thermometer [Using a thermometer traceable to the SI through an NMI] [Performed at two temperatures that bracket the target temperature(s). Assume linearity between the two bracketing temperatures.] [If only a single temperature is used, at the temperature of use]	Liquid in glass: Before first use and annually	± 1.2°C	Apply correction factors or replace thermometer
Minimum-Maximum Thermometers	Against NIST-traceable thermometer[If only a single temperature is used, at the temperature of use]	Electronic: Before first use and quarterly	± 3.0°C	Apply correction factors or replace thermometer
Infrared Temperature Guns	Against NIST-traceable thermometer [if only a single temperature is used, at the temperature of use]	Quarterly at appropriate temperature range for intended use	± 1.5°C	Repair/replace

MASTER

Table 23-3 Calibration Verification Acceptance Criteria for Support Equipment				
Equipment	**Type of Calibration/ Number of Standards**	**Frequency**	**Acceptance Limits**	**Corrective Action**
Volumetric Dispensing Devices (Eppendorf ® pipette, automatic dilutor or dispensing devices)	One delivery by weight. Using DI water, dispense into tared vessel. Record weight with device ID number.	Weekly	± 1% Per SOP 110.0005	Adjust/ Replace.
Volumetric labware	Per SOP 110.0005	Class B: By lot before first use Class A and B: Upon evidence of deterioration	Bias: Mean within ±2% of nominal volume Precision: RSD ≤1% of nominal volume (based on 10 replicate measurements)	Replace.
Non-volumetric labware [Applicable only when used for measuring initial sample volume and final extract/ digestates volume]	Per SOP 110.0005	By lot before first use or upon evidence of deterioration	Bias: Mean within ±3% of nominal volume Precision: RSD ≤3% of nominal volume (based on 10 replicate measurements)	Replace
Glass microliter syringe	Per SOP 110.0005	Upon receipt and upon evidence of deterioration	General Certificate of Bias & Precision upon receipt	Replace if deterioration is evident
Drying oven temperature check		Daily prior to and after use	Within ±5% of set temperature	Adjust.

23.3 Analytical Equipment

23.3.1 Maintenance for Analytical Equipment

All equipment is properly maintained, inspected, and cleaned.

MASTER

Maintenance of analytical instruments and other equipment may include regularly scheduled preventive maintenance or maintenance on an as-needed basis. See Table 23-5 below. Instrument malfunction is documented in Maintenance logs, which become part of the laboratory's permanent records. A description of what was done to repair the malfunction and proof of return to control are also documented in the log. If repair was done by an outside source, invoice record is filed and reference to it made in the maintenance log; indicate proof of return to control by recording that a QC sample met criteria. Instruments and related maintenance procedures (which may be routine) are documented in the test SOPs.

Table 23-5 Analytical Equipment Maintenance

Instrument	Procedure	Frequency
AA (Graphite Furnace and Flame AA)	Clean lens and furnace head	Daily
	Replace windows	As required
	Clean atomizer cell/furnace hood	Daily
	Nebulizer cleaned/dried	Weekly or as required
	Clean filters	Weekly
	Change graphite tube/platform	As required
	Empty waste container	Daily
	Check sample introduction probe	Daily
Mercury Analyzer	Check tubing for wear	Daily
	Fill rinse tank with 3% HCl	Daily
	Fill reductant bottle with Stannous Chloride	Daily
ICP	Check pump tubing	Daily
	Check liquid argon supply	Daily
	Check fluid level in waste container	Daily
	Check filters	Weekly
	Clean or replace filters	As required
	Check torch	Daily
	Check sample spray chamber for debris	As required
	Clean and align nebulizer	As required
	Replace pump tubing	Daily
ICPMS1	Replace tubing	Daily
	TUNE	Daily
	Clean cones	As required
ICPMS2	Replace tubing	Daily
	Check torch alignment	Daily
	TUNE	Daily
	Clean cones	As required
UV-Vis Spectrophotometer	Clean ambient flow cell	As required
	Precision check/alignment of flow cell	As required
	Wavelength verification check	Annually (daily auto-check)
Auto Analyzers	Clean sampler	As required
	Check all tubing	As required
	Oil rollers/chains/side rails	As required

Property of ESS LABORATORY
MASTER

Table 23-5 Analytical Equipment Maintenance		
Instrument	**Procedure**	**Frequency**
	Clean optics and cells	As required
Hewlett Packard GC/MS	Pump oil-level check Pump oil changing Analyzer bake-out Analyzer cleaning Resolution adjustment	Monthly Annually or as required As required As required As required
Gas Chromatograph	Compare standard response to previous day or since last initial calibration Check carrier gas flow rate in column Check temp. of detector, inlet, column oven Septum replacement Glass wool replacement Check system for gas leaks with SNOOP Check for loose/fray wires and insulation Bake injector/column Change/remove sections of guard column Replace connectors/liners Change/replace column(s)	Daily Daily via use of known compound retention Daily As required As required With each cylinder change as req'd Monthly As required As required As required As required
Electron Capture Detector (ECD)	Detector wipe test (Ni-63) Detector cleaning	Semi-annually As required
Flame Ionization Detector (FID)	Detector cleaning	As required
Hall 700A Detector Hall 1000 Detector	Electrolyte change Reactor tube/teflon connecting tube change Clean detector cell	As required by noise As required As required
Photoionization Detector (PID)	Change O-rings Clean lamp window	As required As required
HPLC	Change guard columns Change lamps Change pump seals Replace tubing Change fuses in power supply Filter all samples and eluents (auto-filtered) Change autosampler rotor/stator	As required As required As required As required As required Daily As required
Computers/Printers	Keyboard cleaning (air) Printer nozzle/head cleaning Platen cleaning	As required As required As required
Balances	Class "1" traceable weight check Clean pan and check if level External service	Daily, when used Daily Annually
Conductivity Meter	0.01 M KCl calibration	As required

Property of ESS LABORATORY
MASTER

Table 23-5 Analytical Equipment Maintenance		
Instrument	**Procedure**	**Frequency**
	Conductivity cell cleaning	As required
Turbidimeter	Check light bulb	Daily, when used
Deionized/Distilled Water	Check conductivity System cleaning Replace cartridge & large mixed bed resins	Daily As required As required
Drying Ovens	Temperature monitoring Temperature adjustments	Daily As required
Refrigerator/Freezer Refrigerator/Freezer	Temperature monitoring Temperature adjustment Defrosting/cleaning	Daily As required As required
Vacuum Pumps/ Air Compressor	Drained Belts checked Lubricated	Weekly Monthly Semi-annually
pH/Specific Ion Meter	Calibration/check slope Clean electrode	Daily As required
BOD Incubator	Temperature monitoring	Daily
Centrifuge	Check brushes and bearings	Every 6 months or as needed
Water Baths	Temperature monitoring Water replaced	Daily when used As needed
Other	Per SOP	Per SOP

23.3.2 Instrument Calibration

Information on instrument calibration can be found in Appendix H (Chemistry)

Initial instrument calibration and continuing instrument calibration verification are an important part of ensuring data of known and documented quality. If more stringent calibration requirements are included in a mandated method or by regulation, those calibration requirements override any requirements outlined here or in laboratory SOPs (although SOPs should reflect method stipulations). Generally, procedures and criteria regarding instrument calibrations are provided in test methods.

MASTER

Uncontrolled Document

Section 24

MEASUREMENT TRACEABILITY
(TNI V1:M2 – Section 5.6; ISO/IEC 17025/2005(E) - Clause 5.6)

Measurement quality assurance comes in part from traceability of standards to certified materials.

All equipment used affecting the quality of test results is calibrated prior to being put into service and on a continuing basis. These calibrations are traceable to national standards of measurement where available. When using external calibration services, traceability of measurement shall be assured by the use of calibration services from organizations that can demonstrate competence, measurement capability and traceability to the International System of Units (see Section 23 – "Calibration Requirements").

If traceability of measurements to SI units is not possible or not relevant, evidence for correlation of results through interlaboratory comparisons, proficiency testing, or independent analysis is provided.

24.1 Reference Standards

Reference standards are standards of the highest quality available at a given location, from which measurements are derived. Reference standards shall be calibrated before and after any adjustment.

The laboratory uses ASTM Class 1 weights for daily checks and the lab sends out their ASTM Class 1 weights for a calibration check every five years. It has been established historically (no change between indicated periodic calibrations) that their performance as reference standards has not been invalidated by daily use.

Reference standards, such as ASTM Class 1 weights, are calibrated by an entity that can provide traceability to national or international standards. The following reference standards are sent out to be calibrated to a national standard as indicated in Section 23 – "Calibration Requirements"

- Class 1 weights.
- NIST traceable reference thermometers.

24.2 Reference Materials

Reference materials are substances that have concentrations that are sufficiently well established to be used for calibration or as a frame of reference.

Reference materials, where commercially available, are traceable to SI/ national standards of measurement, or to Certified Reference Materials, usually by a Certificate of Analysis.

Purchased reference materials require a Certificate of Analysis meeting ISO Guide

Uncontrolled Document
Property of ESS LABORATORY
MASTER

34 requirements, where available. If a reference material cannot be purchased with a valid Certificate of Analysis, it is verified by analysis and comparison to a certified reference material and/or demonstration of capability for characterization. Records for standards, reagents, and reference materials shall include lot numbers. Documentation for reagents and solvents shall be checked to ensure that the stated purity will meet the intended use, and the supporting records of the checks shall be filed electronically.

Internal reference materials, such as working standards or intermediate stock solutions, are checked as far as is technically and economically practical, in accordance with SOPs 20.0001 (Standards Tracking - VOA Dept.), 30.0003 (Standards Tracking - Metals Dept.), 40.0039 (Reagent & Standards Tracking - Wet Chem. Dept.), 50.0006 (Reagent & Standards Tracking - Org. Prep. Dept.), 60.0001 (Reagent & Standards Tracking - SVOA Dept.), 80.0013 (Reagent Review and Tracking) and 110.0003 (Deionized Water System Testing)

Additional working standards such as internal thermometers, etc. are checked using the frequency summarized in Table 23-3 in Section 23 - "Calibration Requirements" or in the test SOPs.

24.3 Transport and Storage of Reference Standards and Materials

The laboratory handles and transports reference standards and materials in a manner that protects the integrity of the materials. Reference standard and material integrity is protected by separation from incompatible materials and/or minimizing exposure to degrading environments or materials.

Reference standards and materials are stored according to manufacturer's recommendations, method SOP requirements and separately from samples, extracts and digestates, per SOPs listed above.

24.4 Labeling of Reference Standards, Reagents, and Reference Materials

The laboratory has procedures for purchase, receipt and storage of standards, reagents and reference materials. Purchase procedures are described in Section 9 - "Purchasing Services and Supplies".

Expiration dates can be extended if the reference standard or material's integrity is verified. The extended date may not be beyond the expiration date of the referenced standards used to re-verify. If not re-verified, remove from service. Refer to SOPs listed above.

Reagent quality is verified per SOPs listed above. The quality of water sources is monitored and documented per SOP 110.0003 and shall meet method specified requirements.

24.4.1 Stock Standards, Reagents, Reference Materials and Media

Records for all standards, reagents, reference materials, and media include:

Property of ESS LABORATORY MASTER

- the manufacturer/vendor name (or traceability to purchased stocks or neat compounds)
- the manufacturer's Certificate of Analysis or purity (if supplied)
- the date of receipt
- recommended storage conditions

If the original container does not have an expiration date provided by the manufacturer or vendor it is not required to be labeled with an expiration date. If an expiration date is provided, it must be labeled with the expiration date.

In methods where the purity of reagents is not specified, analytical reagent grade is used. If the purity is specified, that is the minimum acceptable grade. Purity is verified and documented according to Section 9 – "Purchasing Services and Supplies".

24.4.2 Prepared Standards, Reagents, Reference Materials and Media

Records for standards, reagents, reference materials, and media preparation include:

- traceability to purchased stock or neat compounds
- reference to the method of preparation
- date of preparation
- an expiration date after which the material shall not be used (unless its reliability is verified by the laboratory)
- preparer's initials (if prepared)

Refer to SOPs listed above.

All containers of prepared standards, reagents, or materials are labeled with a unique ID and an expiration date per SOPs listed above. The expiration date of the prepared standard shall not exceed the expiration date of the primary standard.

Prepared reagents are verified to meet the requirements of the test method per SOPs listed above. Verification can usually be achieved through the use of laboratory control standards

MASTER

Section 25

COLLECTION OF SAMPLES
(TNI V1:M2 – Section 5.7; ISO/IEC 17025/2005(E) - Clause 5.7)

When ESS Laboratory is not required to provide sampling services, the laboratory's responsibility in the sample collection process lies in supplying the sampler with the necessary coolers, reagent water, sample containers, preservatives, sample labels, custody seals, COC forms and packing materials required to properly preserve, pack, and ship samples to the laboratory.

When ESS Laboratory provides sampling and courier services, these procedures are described in the following SOPs:

10.0006	PCB Wipe Field Sampling Procedure
10.0007	Industrial Wastewater Sampling
10.0012	Field Soil Sampling
10.0013	Groundwater Well Sampling
10.0016	Field pH Testing
10.0017	Sample Courier Service
10.0021	Drinking Water Sample Collection
10.0022	General Field Wipe Sampling Procedure

These SOPs include procedures for recording relevant data and operations relating to sampling that form part of the testing that is undertaken. These records include the sampling procedure used, the identification of the sampler, environmental conditions (if relevant) and diagrams or other equivalent means to identify the sampling location as necessary and, if appropriate, the statistics upon which the sampling procedures are based. These SOPs are available for use by the sampler at the location where sampling is undertaken.

Where the customer requires deviations, additions or exclusions from the documented sampling procedure, these shall be recorded in detail with the appropriate sampling data and shall be included in all documents containing test results, and shall be communicated to the appropriate personnel.

25.1 Sampling Containers

The laboratory offers clean sampling containers for use by clients. These containers, which may or may not contain preservative, are frequently purchased as such. Lots of purchased containers are only obtained from vendors who can supply certificates of compliance to USEPA OSWER directive #9240.0-05A (Specs/Guidance for Contaminant-free Sample Containers). Furthermore, containers are spot-checked for contamination and check results are tracked per SOP 80.0013 (Supplies Tracking).

25.1.1 Preparing Container Orders

Containers (containing any required preservatives) are provided to the client upon request per SOP 10.0017 (Courier Service). Bottle orders are made by telephone,

MASTER

e-mail or via the ESS Lab website; in all cases a bottle order request form is completed per SOP 10.0017.

25.1.2 Sampling Containers, Preservation Requirements, Holding Times

Sampling container, preservation and holding time requirements can be found in SOP 10.0001, Attachment D, which is also included on the reverse side of ESS Laboratory blank COCs.
If preservation or holding time requirements are not met, the procedures in Section 12 – "Control of Nonconforming Environmental Testing Work" are followed.

25.2 Sampling Plan

The laboratory uses sampling plans provided by clients or prepared in consultation with the client. The plan must include any factors that must be controlled to ensure the validity of the test. Sampling plans and written sampling procedures are used for sampling substances, materials or products for testing. The plan and procedures are made available at the sampling location.

The laboratory's procedures for dealing with nonconformances are used when the client requests any deviations from the sampling plan or sampling procedures. The requests are documented and included in the final test report.

25.3 Sampling Records

The following relevant sampling data are recorded: sampling procedure used, the date and time of sampling, the identification of the sampler, environmental conditions (if relevant), the sampling location, and any other pertinent information which may be necessary to protect the integrity of the test or calibration item, and to protect the interests of the laboratory and the customer.

MASTER

Section 26

HANDLING SAMPLES AND TEST ITEMS

(TNI V1:M2 – Section 5.8 and Section 1.7 of Technical Modules TNI V1:M4; ISO/IEC 17025/2005(E)-Clause 5.8)

26.1 Sample Receipt

When samples are received at the laboratory, chain-of-custody is reviewed, condition is documented, samples (and bottles/vials) are given unique identifiers, and they are logged into the sample tracking system, in accordance with SOPs 10.0001 (Sample Receiving), 70.0006 (Bar Coding) and 70.0008 (Sample Login).

26.1.1 Chain of Custody

The chain of custody or sample submission sheets from the field are reviewed. This documentation is completed in the field and provides a written record of the handling of the samples from the time of collection until they are received at the laboratory. Section 25 – "Collection of Samples" outlines what information is needed on this record. The chain of custody form also provides information on what type of testing is being requested and can act as an order for laboratory services in the absence of a formal contract. A typical chain of custody form can be found in Figure 26-1 below and in SOP 10.0001. Chain of custody and any additional records (which may include special instructions, reporting limit requirements etc.) received at the time of sample submission are maintained by the laboratory. These are scanned by the sample receiver, filed as PDFs in an appropriate network directory and are available for use by analysts should testing need to begin before work has been formally logged into the LIMS. These scanned chains are also available for use in subcontracted record keeping.

26.1.1.1 Legal Chain of Custody

The laboratory has procedures (see above) for legal chain of custody services. If samples are noted as being used for legal/evidentiary purposes, the chain of custody followed by the laboratory ensures that pertinent regulatory requirements are met.
The legal COC protocol records shall establish an intact, continuous record of the physical possession, storage and disposal of used sample containers, collected samples, sample aliquots, and sample extracts or digestates, collectively referred to below as "samples". The COC records shall account for all time periods associated with the samples. For ease of discussion, the above-mentioned items shall be referred to as samples:

a) A sample is in someone's custody if:

i) It is in one's actual physical possession;
ii) It is in one's view, after being in one's physical possession;
iii) It has been in one's physical possession and then locked or sealed so that no one can tamper with it; and/or

MASTER

iv) It is kept in a secure area, restricted to authorized personnel only.

b) The COC records shall identify all individuals who physically handled individual samples. Proof of custody is accomplished via the laboratory's bar-coding and LIMS.

c) Should it become necessary to subcontract any testing to an off-site facility (refer to Section 8), custody must continue to be maintained.

d) Normal practice is for a laboratory courier to deliver sampling containers in accordance with SOP 10.0017 (Sample Courier Service).

26.2 Sample Acceptance

Procedures for opening shipping containers and examining samples are provided in SOP 10.0001 (Sample Receiving).
When samples are received outside of normal business hours, the second/third shift sample receiver takes care of all samples that still need to be received, bar coding samples, scanning the COCs as PDFs, logging COCs into the LIMS (except where projects need to be set up) and placing the bar coded samples onto carts (in order) to be 2nd reviewed the following morning. The carts with samples are stored in a "Walk-in" refrigerator and samples for volatiles analysis are stored in their appropriate fridges/freezers.

The laboratory has a sample acceptance policy that is followed by sample collection personnel and is posted in the sample receiving area and on the company website. It emphasizes the need for use of water-resistant ink, providing proper documentation (to include sample ID, location, date and time of collection, collector's name, preservation type, sample type and any special remarks about the sample), labeling of sample containers to include a unique sample ID, use of appropriate containers, adherence to holding times, and sample volume requirements. In addition the laboratory has nonconformance/corrective action procedures to handle samples that don't meet the requirements above or show signs of damage, contamination or inadequate preservation. Data will be appropriately narrated where samples are reported that do not meet sample acceptance requirements.

The laboratory checks samples for the conditions above per SOP 10.0001, where appropriate, to evaluate sample acceptance. Criteria regarding preservation, holding time and sample volume requirements can be found in SOP 10.0001, Attachment D, which is also included on the reverse side of ESS Laboratory blank COCs. If these conditions are not met, the client is contacted by the project manager prior to any further processing, then 1) the sample is rejected as agreed with the client, 2) the decision to proceed is documented and agreed upon with the client, 3) the condition is noted on the Chain of Custody form and/or lab receipt documents, and 4) the data are qualified in the report.

26.2.1 Preservation Checks

The following preservation checks are performed and documented upon receipt:

Property of ESS LABORATORY
MASTER

26.2.1.1 *Thermal preservation:*

a) For temperature preservation of samples at 4°C, the acceptable range is from just above freezing to 6°C. Samples which need to be kept frozen are stored at less than -10°C.

b) Samples that are delivered to the lab the same day as they are collected are likely not to have reached a fully chilled temperature. This is acceptable if the samples are received on ice and the chilling process has begun.

c) Record on the receipt form if ice is present and the temperature.

Chlorine checks:

d) Laboratories that receive samples from potable water supplies (including source water) that have a demonstrated history of acceptable preservation may check a sample from each client at a frequency of once per month if:

i) the laboratory can show that the received sample containers are from their laboratory;

ii) sufficient sodium thiosulfate was in each container before sample collection to neutralize at minimum 5 mg/l of chlorine for drinking water and 15 mg/l of chlorine for wastewater samples;

iii) one container from each batch of laboratory prepared containers or lot of purchased ready-to-use containers is checked to ensure efficacy of the sodium thiosulfate to 5 mg/l chlorine or 15 mg/l chlorine as appropriate and the check is documented;

iv) chlorine residual is checked in the field and actual concentration is documented with sample submission.

Chemical Preservation:

e) Chemical preservation should be checked at the time of sample receipt unless it is not technically acceptable to do so (e.g., VOC analyses; samples received after hours when sample receiver might be working alone) and this requirement will normally be followed. When other programs (e.g. TNI, MCP, RCP) permit, then procedures for checking sample preservation using readily available techniques (such as pH or chlorine) at the time of sample preparation or analysis, shall be implemented. Chemical preservation of samples for volatile organic compound analysis may be checked after analysis. The sample receiving procedure is detailed in SOP 10.0001.

If any of the following conditions exist, chemical preservation must be rechecked in the laboratory:

MASTER

i) Continued preservation of the sample is in question (e.g., the sample may not be compatible with the preservation); or

ii) Deterioration of the preservation is suspected.

26.2.3 Rush/Short Hold Time Samples

The laboratory ensures that the appropriate laboratory personnel are notified when samples are received with a quick turn-around time request, short hold times, or a short amount of hold time is remaining, per SOPs 10.0001 and 10.0002.

26.2.4 Radioactive Samples

The laboratory does not accept radioactive samples. The laboratory routinely tests samples for radioactivity per SOP 10.0001. Samples found to be radioactive samples will be isolated and arrangements made to return them to sender.

26.2.4 Non-routine Samples

Samples that require non-routine or additional sample preparation steps are accepted by pre-arrangement with the client.

26.2.5 On Hold Samples

Samples may be stored in the Sample Receiving area refrigerator, pending client's instructions on when and how to proceed with testing.

26.3 Sample Identification

Samples, including subsamples, extracts and digestates, are uniquely identified in a permanent chronological record in the LIMS, per the aforementioned SOPs, to prevent mix-up and to document receipt of all sample containers.

Samples are assigned sequential numbers that reference more detailed information kept in the Project Number Login, per SOP 10.0001.

The following information is included in this log:

- Client or project name
- Container type
- Unique laboratory identification number
- Signature or initials of person making the entries
- Subcontracting information
- Turn Around Time

In addition, the following information is maintained and linked to the log-in record:

- Date and time of sampling linked to the date and time of laboratory receipt.
- Unique field identification number linked to the laboratory sample ID.
- Analyses requested (including applicable approved method numbers) linked to the laboratory sample ID, per COC.

MASTER

- Cooler receipt information.
- Comments regarding rejection (if any).

All documentation received regarding the sample, such as memos or chain of custody, are scanned into an electronic project folder for permanent retention.

26.4 Sample Aliquots / Subsampling

In order for analysis results to be representative of the sample collected in the field, the laboratory has subsampling procedures. See SOP 10.0001 Attachment G.

26.5 Sample Storage

Storage conditions are monitored for any required criteria, verified, and the verification recorded in logbooks.

Samples that require thermal preservation are stored under refrigeration that is +/-2°C of the specified preservation temperature unless regulatory or method specific criteria require something different. For samples with a specified storage temperature of 4°C, storage at a temperature above the freezing point of water to 6°C is acceptable.

Samples are held secure, as required. Samples are accessible only to laboratory personnel.

Samples are stored apart from standards, reagents, food or potentially contaminating sources and such, so that cross-contamination is minimized/eliminated. All portions of samples, including extracts, digestates, leachates, or any product of the sample is maintained according to the required conditions.

Samples with potentially high levels of volatile organics, cyanide or restricted (foreign) soil are stored in refrigerators/freezers designated for these purposes.

Refrigerator blanks are stored with samples in volatile sample refrigerators, and are analyzed weekly to check for possible cross-contamination.

26.6 Sample Disposal

Samples are retained a minimum of 30 days (60 days for DoD samples) after completion of testing unless other arrangements have been made with the client; samples are then disposed of appropriately or returned to client (if requested).

Samples are disposed of according to Federal, State and local regulations. Procedures are described in SOP 10.0002 (Sample Storage) and 90.0002 (Hazardous Waste Contingency), for the disposal of samples, digestates, leachates, and extracts.

MASTER

26.7 Sample Transport

Samples that are transported under the responsibility of the laboratory, where necessary, are done so safely and according to storage conditions. This includes moving bottles within the laboratory. Specific safety operations are addressed outside of this document.

Sample shipping procedures are described in SOP 10.0017 (Courier Service).

MASTER

Figure 26-1 Example Chain of Custody

ESS Laboratory

Division of Thielsch Engineering, Inc.
185 Frances Avenue, Cranston, RI 02910-2211
Tel. (401) 461-7181 Fax (401) 461-4486
www.esslaboratory.com

CHAIN OF CUSTODY

Page_____ of_____

Turn Time ___ Standard Other ________
[illegible] 5 days, [illegible] is required #____

State where samples were collected from:
MA RI CT NH NJ NY ME Other ______

Is this project for any of the following:
MA-MCP Navy USACE Other

Reporting Limits

ESS LAB PROJECT ID

Electronic Deliverable Yes___ No___
Format: Excel__ Access__ PDF__ Other______

Co. Name				Project #	Project Name [illegible]			Number of Containers	Type of Containers	Write Required Analysis
Contact Person				Address						
City	State		Zip	PO#						
Telephone #		Fax #		Email Address						
ESS LAB Sample #	Date	Collection Time	[illegible]	[illegible]	[illegible]	Sample Identification [illegible]	Pres Code			

Container Type: P-Poly G-Glass S-Sterile V-VOA | Matrix: S-Soil SD-Solid D-Sludge WW-Waste Water GW-Ground Water SW-Surface Water DW-Drinking Water O-Oil W-Wipes F-Filters

Cooler Present Yes No | Internal Use Only
Seals Intact ___Yes ___No NA:___ | [ ] Pickup
Cooler Temp: _____ | [ ] Technicians ___

Preservation Code: 1-NP, 2-HCl, 3-H2SO4, 4-HNO3, 5-NaOH, 6-MeOH, 7-Ascorbic Acid, 8-ZnAct, 9-______

Sampled by:

Comments:

Relinquished by: (Signature)	Date/Time	Received by: (Signature)	Date/Time	Relinquished by: (Signature)	Date/Time	Received by: (Signature)	Date/Time
Relinquished by: (Signature)	Date/Time	Received by: (Signature)	Date/Time	Relinquished by: (Signature)	Date/Time	Received by: (Signature)	Date/Time

*By circling MA-MCP, client acknowledges samples were collected in accordance with MADEP CAM VII A

Please fax all changes to Chain of Custody in writing.

1 (White) Lab Copy 2 (Yellow) Client Receipt

[illegible]

Property of ESS LABORATORY

MASTER

Figure 26-2 Example Sample Acceptance Policy

The following criteria are used by ESS Laboratory to define its sample acceptance policy for regulatory samples:

ESS Laboratory is an environmental analytical laboratory and as such is prepared to handle environmental samples. These include soils, sediments, ground waters, surface waters, and drinking waters. All other samples require notification prior to sending to the laboratory. ESS Laboratory will make provisions to accept jewelry, caulk, oil, and other types of matrices. ESS Laboratory will not receive radioactive samples, untreated sewage, samples containing body fluids, or acutely hazardous materials. If client is sending any type of chemical, it must be accompanied by a material safety data sheet.

Samples should be received in coolers on ice and clearly labeled.

Samples must be received with paperwork (chain of custody – see attached) detailing name of sample, date collected, time collected, number of bottles, and analyses required. Chain of custody should also include client contact information and any special handling requirements. All samples must be relinquished to the laboratory and received by the laboratory.

Samples should be taken in appropriate containers with appropriate preservation. Refer to attached chain of custody table. The laboratory will supply any glassware, special sampling devices and instructions needed to allow the client to properly pack the glassware.

Upon arrival at the laboratory, ESS will take the temperature of the cooler and record it on the cooler receipt form. The sample receiver will ensure that the samples are not radioactive and are in good condition (leaks, air bubbles, broken caps, etc). Samples will be lined up and compared to chain of custody. Chain of custody can be signed once inspection is complete.

Samples will be assigned a unique barcode ID. A cooler receipt form will be generated and turned into the Customer Services Department. All deviations such as temperature, preservation, insufficient volumes and hold time issues will be recorded. The client will be notified and required to address all deviations before work is initiated on the samples. If the laboratory is required to preserve unpreserved samples, a notation will be made on the cooler receipt form. If the preservation is outside of regulations, the report will contain a statement recording this issue. All deviations outside of regulatory controls will be qualified in the report narrative.

MASTER

Section 27

QUALITY ASSURANCE FOR ENVIRONMENTAL TESTING *(TNI V1:M1, V1:M2 - Section 5.9, V1:M4 - Section 1.7; ISO/IEC 17025/ 2005(E)-Clause 5.9)*

ESS Laboratory has procedures for monitoring the validity of the testing it performs. The qualities of test results are recorded in such a way that trends are detectable, and where practicable, are statistically evaluated. To evaluate the quality of test results, the laboratory uses certified reference materials, control charting, replicate or confirmational analyses, retesting of retained sample(s) (which may be at a dilution) and correlation of results for different characteristics of a sample.

In addition to procedures for calibration (Section 23 & Appendix H), the laboratory monitors quality control measurements such as blanks, laboratory control samples (LCS), matrix spikes (MS), duplicates, surrogates and internal standards to assess precision and accuracy. Proficiency Testing samples are also analyzed to assess laboratory performance.

Quality control data are analyzed and, when found to be outside pre-defined criteria, action is taken to correct the problem and to prevent incorrect results from being reported. Data associated with quality control data outside of criteria and still deemed reportable will be qualified so the end user of the data may make a determination of the usability of the data - see Section 28 – "Reporting of Results".

27.1 Essential Quality Control Procedures

The quality control procedures specified in test methods are followed by laboratory personnel. The most stringent of control procedures is used in cases where multiple controls are offered. If it is not clear which are the most stringent, those mandated by test method or regulation are followed.

Acceptance criteria are commonly defined in the QC sections of the test method SOPs. For test methods that do not provide acceptance criteria for an essential quality control element or where no regulatory criteria exist, acceptance criteria are developed per SOP 110.0014 (Control Charts). In some instances, the client may set criteria. In any event, acceptance criteria are entered in the Element LIMS under the pertinent test code.

Written procedures to monitor routine quality controls including acceptance criteria are located in the test method SOPs, except where noted, and include such procedures as:

- use of laboratory control samples and blanks to serve as positive and negative controls for chemistry methods.
- use of laboratory control samples to monitor test variability of laboratory results;
- use of calibrations, continuing calibrations, certified reference materials and/or PT samples to monitor accuracy of the test method;

Property of ESS LABORATORY MASTER

- measures to monitor test method capability, such as limit of detection, limit of quantitation, and/or range of test applicability, such as linearity;
- use of regression analysis, internal/external standards, or statistical analysis to reduce raw data to final results;
- use of reagents and standards of appropriate quality and use of second source materials as appropriate;
- procedures to ensure the selectivity of the test method for its intended use; &
- measures to assure constant and consistent test conditions, such as temperature, humidity, rotation speed, etc., when required by test method.

27.2 Internal Quality Control Practices

Analytical data generated with QC samples that fall within all prescribed acceptance limits indicate the test method is deemed to be in control.

QC samples that fall outside QC limits indicate the test method are deemed to be out of control (nonconforming) and that corrective action is required and/or that the data are qualified (see Section 12 – "Control of Nonconforming Environmental Testing Work" and Section 14 - "Corrective Actions").

Detailed QC procedures and QC limits are included in test method standard operating procedures (SOPs), or where unspecified in the SOPs, are detailed in e-mail directives pending formal addition to SOPs.

All QC measures are assessed and evaluated on an on-going basis, so that trends are detected and prompt corrective action may be scheduled, if needed.

27.2.1 General Controls

The following general controls are used:

27.2.1.1 Positive and Negative Controls such as:

a) Blanks (negative)
b) Laboratory control sample (positive)

27.2.1.2 Selectivity is assured through:

a) absolute and relative retention times in chromatographic analyses (referenced in SOPs);
b) GC/MS (full scan or SIM) or two-column (dissimilar stationary phases) confirmation if composition of samples is not well characterized, as is the case when using non-specific detectors;
c) use of acceptance criteria for mass-spectral tuning (found in test method SOPs); and
d) use of the correct method according to its scope, assessed during method validation.

Property of ESS LABORATORY
MASTER

27.2.1.3 Consistency, Variability, Repeatability, and Accuracy are assured through:

a) proper installation and operation of instruments according to manufacturer's recommendations or according to the processes used during method validation;

b) monitoring and controlling environmental conditions (temperature, access, proximity to potential contaminants);

c) selection and use of reagents and standards of appropriate quality (referenced in SOPs); and

d) cleaning glassware appropriate to the level required by the analysis as demonstrated with method blanks, per glassware cleaning SOPs 30.0001 (Metals) and 50.0001 (Organic Prep).

e) following SOPs and documenting any deviation, assessing for impact, and treating data appropriately;

f) testing to define the variability and/or repeatability of the laboratory results, such as via replicates;

g) use of measures to assure the accuracy of the test method, including calibration and/or continuing calibrations (detailed in Appendix H), use of certified reference materials, proficiency test samples, or other measures; and

27.2.1.4 Test Method Capability (also see Section 22 – "Environmental Methods and Method Validation") is assured through:

a) establishment of the limit of detection, where appropriate;

b) establishment of the limit of quantitation or reporting level; and/or

c) establishment of the range of applicability such as linearity.

27.2.1.5 Data reduction is assured to be accurate by:

a) selection of appropriate formulae to reduce raw data to final results such as regression;

b) following specific procedures for data reduction such as manual integration procedures; and

c) periodic review of data reduction processes to assure applicability;

27.2.1.6 Sample Specific controls are used to evaluate the effect of sample matrix on the performance of the selected analytical method (not a measure of laboratory performance):

Examples:
- Matrix Spike and Matrix Spike Duplicate (MS/MSD)
- Surrogate Spikes
- Sample Duplicates

MASTER

27.2.1.7 Tables summarizing the required elements of a quality control system (data quality objectives) by various regulatory bodies may be found in the pertinent test SOPs.

27.2.2 Specific Controls

27.2.2.1 Method Blanks

Method blanks are processed along with and under the same conditions as the associated samples to include all steps in the method. A method blank must be analyzed at a minimum of one per preparation batch. When no separate preparation method is used the batch is defined as the environmental samples that are analyzed with the same method and personnel, using the same lots of reagents, not to exceed the analysis of twenty environmental samples, not including method blanks, LCS, matrix spikes and matrix duplicates. The matrix of the method blank must be similar to the associated samples and be free from any analytes of interest. Method blanks are not required for some analyses such as pH, conductivity, flashpoint, temperature.

Contaminated blanks are identified according to the acceptance limits in the test method SOPs or laboratory documentation.

The laboratory identifies a blank as contaminated when analyte results are greater than the reporting limit and greater than 1/10th the amount measured in any associated sample, or 1/10th the regulatory limit, whichever is greater; or where the contaminant affects the sample results, per test method requirements or client data quality objectives.

When a blank is determined to be contaminated, the cause must be investigated and measures taken to minimize or eliminate the problem.

Data that are unaffected by the blank contamination (non-detects or other analytes) are reported unqualified.

Sample data that are suspect due to the presence of a contaminated blank are reanalyzed, qualified, or voided.

27.2.2.2 Laboratory Control Samples (Blank Spikes)

Laboratory Control Samples (LCS; BS) are prepared from analyte free water or other clean matrix, and spiked with verified and known amounts of analytes for the purpose of establishing precision or bias measurements.

The matrix spike (Section 27.2.2.3 below) may be used in place of this control as long as the acceptance criteria are as stringent as for the LCS.

Alternatively, the LCS may consist of a media containing known and verified concentrations of analytes or as Certified Reference Material

Property of ESS LABORATORY
MASTER

(CRM). All analyte concentrations shall be within the calibration range of the methods. The following shall be used in choosing components for the spike mixtures:
The components to be spiked shall be as specified by the mandated method or regulation or as requested by the client. In the absence of specified spiking components, the laboratory shall spike per the following:
a) for those components that interfere with an accurate assessment, such as spiking simultaneously with technical chlordane, toxaphene and PCBs, the spike shall be chosen that represents the chemistries and elution patterns of the components to be reported; and
b) for those methods that have extremely long lists of analytes, a representative number may be chosen. The analytes selected shall be representative of all analytes reported.

The following criteria shall be used for determining the minimum number of analytes to be spiked. However, the laboratory shall insure that all targeted components are included in the spike mixture over a two (2) year period:
Laboratory control samples are analyzed at a frequency mandated by method, regulation, or client request, whichever is more stringent. The standard frequency of LCS preparation and analysis is at least one per analytical batch or as otherwise stated in a laboratory SOP. Exceptions would be for those analytes where no spiking solution is available, such as pH, color, odor, temperature. When no separate preparation method is used, the batch is defined as the environmental samples that are analyzed with the same method and personnel, using the same lots of reagents, not to exceed the analysis of twenty environmental samples, not including method blanks, LCS, matrix spikes and matrix duplicates.

The analytes to be spiked in the LCS are specified in the test method SOP. In some cases a client may specify a list of analytes for spiking and the request is handled using the laboratory's nonconformance procedures.

The results of laboratory control samples (LCS) are calculated in percent recovery or other appropriate statistical technique that allows comparison to established acceptance criteria. The laboratory documents the calculation in the pertinent test method SOP.

The individual LCS is compared to the acceptance criteria as published in the mandated test method, or where there are no established criteria, the laboratory uses in-house established limits as described in SOP 110.0014.

The TNI Standard allows certain marginal exceedances for target analytes, as follows (these are also specified in the test SOPs):

Number of analytes in LCS	Number of allowed exceedances
> 90	5

MASTER

71 - 90	4
51 - 70	3
31 - 50	2
11 - 30	1
< 11	0

When the acceptance criteria for the positive control are exceeded high (i.e., high bias) and there are associated samples that are non-detects, then those non-detects may be reported with data qualification; or when the acceptance criteria for the positive control are exceeded low (i.e., low bias), those sample results may be reported if they exceed a maximum regulatory limit/decision level, with data qualifying codes.

27.2.2.3 Matrix Spikes and Matrix Spike Duplicates

Matrix Spikes and Matrix Spike Duplicates (MS/MSD) are environmental samples fortified with a known amount of analyte to help assess the effect of the matrix on method performance.

The laboratory procedure for MS/MSD includes spiking appropriate analytes at appropriate concentrations, calculating percent recoveries and relative percent difference (RPD), and evaluating and reporting the results. The procedure can be found in the pertinent method SOP.

Where there are no established criteria, MS/MSD criteria are established in the same manner as that described above for LCS.

For MS/MSD results outside established criteria, corrective action is documented or the data are reported with appropriate data qualification; an inability to meet QC criteria may result from matrix interference and if this is the case, then it will be so narrated in the final report. Only data from the parent spiked sample is qualified.

27.2.2.4 Surrogate Spikes

Surrogate spikes are substances with chemical properties and behavior similar to the analytes of interest and are used to assess method performance in individual samples. Surrogates are added to all samples (in test methods where surrogate use is appropriate) prior to sample preparation or extraction.

Surrogate recovery results are compared to the acceptance criteria as published in the mandated test method. Where there are no established criteria, the laboratory follows the procedures described above in Section 27.2.2.2 to derive surrogate control limits.

For surrogate results outside established criteria, data are evaluated to determine the impact. Corrective actions are detailed in the respective SOPs.

Property of ESS LABORATORY MASTER

27.3 Proficiency Test (PT) Samples or Interlaboratory Comparisons

27.3.1 Compliance to Accreditation Requirements

The laboratory analyzes at least two TNI-compliant PT samples per calendar year for each of the Fields of Proficiency Testing (FoPT) for which the laboratory is accredited. An exception is made for analytes where there is no PT available from any PTPA approved PT provider at least twice per year. In these cases the lab will run the PTs in the minimum time frame the PTs are available and not at all if they are not available.

The successive PTs are analyzed at least five months apart and no more than 7 months apart unless the PT is being used for corrective action to maintain or reinstate accreditation, in which case the dates of successive PT samples for the same accreditation FoPT is at least fifteen days apart.

27.3.2 PT Sample Handling, Analysis and Reporting

The laboratory does not share PT samples with other laboratories, does not communicate with other laboratories regarding current PT sample results, and does not attempt to obtain the assigned value of any PT sample from the PT provider.

Proficiency Testing samples are treated as typical samples in the normal production process where possible, including the same analysts, preparation, calibration, quality control and acceptance criteria, sequence of analytical steps, number of replicates, and sample log-in. PT samples are not analyzed multiple times unless routine environmental samples are analyzed multiple times. Where PT samples present special problems in the analysis process, they will be treated as laboratory samples where clients have special requests.

The type, composition, concentration and frequency of quality control samples analyzed with the PT samples are the same as with typical samples.

Prior to the closing date of a study, laboratory personnel do not:

- Subcontract analysis of a PT sample to another laboratory being run for accreditation purposes.
- Knowingly receive and analyze a PT for another laboratory being run for accreditation purposes.
- Communicate with an individual from another laboratory concerning the analysis of the PT sample.
- Attempt to find out the assigned value of a PT from the PT Provider.

A result for any PT study parameter which is at a concentration above or equal to the LOQ (defined in Appendix H) shall be reported as the resultant value.

MASTER
Property of ESS LABORATORY

A result for any PT study parameter which is at a concentration less than the LOQ shall be reported as less than the value of the LOQ.

When a PT sample assigned value falls below the range of the routine method, a low level procedure needs to be used. The laboratory's procedures for testing low level samples (including PT samples) are outlined in the pertinent laboratory SOPs. The laboratory reports PT study results to the PT provider, in the provider's specified format, on or before the study closing date. The frequency at which PT study results are reported to a regulatory body is determined by the agency in question. On or before the closing date of a study the laboratory authorizes the PT Provider to release the laboratory's final evaluation report directly to pertinent regulatory bodies.

The laboratory institutes corrective action procedures for failed PT samples following the guidelines in Section 14 – "Corrective Action".

Retention of PT records, including data necessary to reconstruct results, is similar to that maintained for regular environmental samples, as specified in test SOPs. In addition the lab maintains a copy of the online data entry summary when the PT results are submitted online.

27.4 Data Review

The laboratory reviews all data generated in the laboratory for compliance with method, laboratory and, where appropriate, client requirements, in accordance with SOPs 70.0004 (Work Order Management), 70.0005 (Levels III and IV Data Review) and 70.0007 (Data Entry and Data Reporting in Element LIMS):

Electronic preparation bench sheets, instrumental analysis run logs and the Element LIMS are used to record the information required for traceability of the analysis. These records include quality control measurements and acceptance criteria. Data are recorded on the bench sheets/run logs promptly at the time of analysis, per SOP 80.0040 (Logbooks). The reportables are highlighted in a new XLS workbook by the first reviewer and the preparation bench sheet is added to it to produce a combined document.

Analysts (first reviewers) review sample data and QC information at the time of the analysis and indicate necessary information by marking the run log. The analyst (first reviewer) signs the run log (dating/time is done automatically by the software program) to indicate that they have performed the steps listed and that the analysis meets acceptance criteria or has exceptions that are noted in the comments column of the run log.

When the analyst has finished the primary analysis review, the combined record is then used by the appropriate personnel to enter the data into the LIMS.

Another person, either in the QA Dept. or in the originating laboratory dept. (second reviewer), checks the combined record for the following items:

a) All required information has been recorded in the combined record.
b) QC acceptance criteria or exceptions are documented in the comments column of the run log.

Property of ESS LABORATORY
MASTER

c) Manual calculations are checked for accuracy.

When these checks have been completed, the second reviewer signs the combined record to show that the review has been performed.

When reporting data for methods requiring two column confirmation, project-specific reporting requirements are followed. If not available, method reporting requirements are followed. If these are not specified, report primary column results unless there is a scientifically valid and documented reason for not doing so, as specified in the test SOP and client agrees. DoD clients are to be notified of any results that are unconfirmed (confirmation not performed or obscured by interference). These shall also be qualified in the test report and explained in the case narrative. Analyte presence is only indicated when confirmation is positive or cannot be discerned from interference.

The report is printed as a pdf and submitted to the approved signatories, who will normally be a QA Dept. data validator for final technical review (Level III) and Admin. Dept. personnel for final administrative review (Level IV). The final technical review includes verifying that the data entered on the worksheet has been appropriately transferred to the LIMS and that the data is coherent, that the QC results are acceptable, QC exceptions are appropriately reflected on the final report and that the results are in line with historical values, if known. Correlation of results for different characteristics of an item may also be considered.

The Level IV review is a final check of the work order to ensure that the three prior levels have been completed, any deviations have been noted in the project narrative, all sample analyses have been performed based on comparison with the COC, the final report was delivered to the client electronically or otherwise, and electronic data deliverables have been generated and submitted to the client as requested.

In addition, the Quality Manager or QA Officer shall review a minimum of 10% of all data packages for technical completeness and accuracy. This review is considered a part of overall data review and does not need to be completed before the data package is issued to the customer.

If electronic audit trail functions are available, they must be in use at all times, and associated data must be accessible. If the instrument does not have an audit trail, the laboratory must have procedures to record the integrity of the data. Refer to SOP 80.0040.

MASTER

Section 28

REPORTING THE RESULTS
(TNI V1:M2 – Section 5.10; ISO/IEC 17025/2005(E) - Clause 5.10)

The result of each test performed is reported accurately, clearly, unambiguously, and objectively and complies with all specific instructions contained in the test method.

Laboratory results are reported in a test report that includes all the information requested by the client and necessary for the interpretation of the test results and all information required by the method used. Any information listed below in Section 28.1 which is not reported to the customer shall be readily available in the laboratory department/LIMS, which carried out the tests and/or calibrations.

Data are reported without qualification if they are greater than the lowest calibration standard, lower than the highest calibration standard, and without compromised sample or method integrity.

Test reports meeting the TNI/ISO 17025 standards are issued by electronic data transfer in PDF or, if requested, in spreadsheet format.

28.1 Test Reports

The report format has been designed to accommodate each type of test performed and to minimize the potential for misunderstanding or misuse.

Each test report generated contains the following information, unless dictated otherwise by contractual agreement:

a) a title, such as Certificate of Analysis;

b) the name and address of the laboratory, the location of the laboratory if different from the address; phone/fax number and web address;

c) unique identification of the test report, such as a serial number, on each page and a pagination system that ensures that each page is recognized as part of the test report and a clear identification of the end of the report, such as 3 of 10;

d) the name, address of the client;

e) the project identification and location (if available);

f) the identification of the method used;

g) a description of, the condition of, and unambiguous identification of the sample(s) tested, including the client identification code;

h) the date of sample receipt when it is critical to the validity and application of the results, date and time of sample collection, dates the tests were performed,

Property of ESS LABORATORY
MASTER

the time of sample preparation and analysis if the required holding time for either activity is less than or equal to 72 hours;

i) reference to the sampling plan and procedures used by the laboratory where these are relevant to the validity or application of the results;

j) the test results, units of measurement, an indication of when results are reported on any basis other than as received (e.g. dry weight), failures identified by narrative and/or use of qualifiers (see SOP 70.0002 – Data Flagging).

k) the name, function, and signature or an equivalent electronic identification of the person authorizing the test report, and the date of issue;

l) where relevant, a statement to the effect that the results relate only to the samples;

m) Any non-accredited tests or parameters shall be clearly identified as such to the client when claims of accreditation to this Standard are made in the analytical report or in the supporting electronic or hardcopy deliverables;

n) A statement that the report shall not be copied except in full without approval of the laboratory;

o) An Adobe® custom dynamic stamp stating "REVIEWED by ESS Laboratory at *'Time' 'Date'* ";

p) Table of Contents, which may be generated electronically by the Adobe® software; and

q) Date of issuance

28.2 Supplemental Test Report Information

When necessary for interpretation of the results or when requested by the client, test reports include the following additional information (case narrative):

a) deviations from, additions to, or exclusions from the test method, information on specific test conditions, such as environmental conditions, and any non-standard conditions that may have affected the quality of the results, and any information on the use and definitions of data qualifiers;

b) a statement of compliance/non-compliance when requirements of the management system are not met, including identification of test results that did not meet the laboratory and regulatory sample acceptance requirements, such as holding time, preservation, etc.;

c) where applicable and when requested by the client, a statement on the estimated uncertainty of the measurement; information on uncertainty is needed in test reports when it is relevant to the validity or application of the test results, when a customer's instruction so requires, or when the uncertainty affects compliance to a specification limit.

MASTER

d) where appropriate and needed, opinions and interpretations. When opinions and interpretations are included, the basis upon which the opinions and interpretations are documented. Opinions and interpretations are clearly marked as such in the test report case narrative.

e) additional information which may be required by specific methods, regulatory agency or client;

f) qualification of results with values outside the calibration range, as appropriate.

In addition to the items above, for test reports that contain the results of sampling, the following is provided when necessary for the interpretation of the results:

a) the date of sampling;

b) unambiguous identification of the material sampled;

c) the locations of the sampling, including diagrams, sketches, or photographs;

d) a reference to the sampling plan and procedures used;

e) details of any environmental conditions during sampling that may affect the interpretations of the test results;

f) any standard or other specification for the sampling method or procedure, and deviations, additions to or exclusions from the specification concerned.

In addition to the requirements listed above, calibration certificates shall include the following, where necessary for the interpretation of calibration results:

28.3 Environmental Testing Obtained from Subcontractors

Test results obtained from tests performed by subcontractors are clearly identified on the test report by subcontractor name and/or accreditation number.

The subcontractors report their results in writing or electronically. A copy of the subcontractor's report, as received on their letterhead, is included in the test report.

28.4 Electronic Transmission of Results

All test results transmitted by telephone, fax, telex, e-mail, or other electronic means comply with the requirements of the TNI/ISO 17025 Standards and associated procedures protecting the confidentiality and proprietary rights of the client (see Section 22- "Environmental Methods and Method Validation").

28.4.1 Electronic Data Deliverables

The preparation and submission of electronic data deliverables in a prescribed format (e.g. SEDD, AECOM, CLP-Like) created using special software programs (Element LIMS, EDD Writer) is by contractual agreement and is designed to accommodate each type of test or calibration carried out and to minimize the possibility of misunderstanding or misuse.

MASTER

28.5 Amendments to Test Reports

Material amendments (revisions) to a test report after it has been issued are made only in the form of another document or data transfer and must be approved by management. All supplemental reports meet all the requirements for the initial report and the requirements of this *Quality Manual*.

Amended test reports include the statement, "This report has been revised to....." in bold letters or an equivalent form of wording to assure they can be differentiated from other test reports.

When it is necessary to issue a complete new report, the new report is uniquely identified and contains a reference to the original that it replaces.

MASTER

Uncontrolled Document

Appendix A

Master List of Controlled Documents

SOP#	STATUS	Rev #	Date Initiated	Last reviewed	SOP METHOD TITLE
10.0000					**Sample Receiving Department**
10.0001	Active	9	4/11/07	12/7/16	Sample Receiving
10.0002	Active	3	6/12/05	12/7/16	Storage of Samples
10.0003	Active	2	4/6/07	12/7/16	Refrigerator/Freezer Temperature Maintenance
10.0006	Active	4	4/5/07	In review	PCB Wipe Field Sampling Procedure
10.0007	Active	1	11/21/07	12/7/16	Industrial Waste Water Sampling
10.0010	Active	0	8/3/00	12/6/16	Operation of Radalert Radiation Monitor
10.0011	Active	1	11/20/07	12/6/16	ISCO Maintenance
10.0012	Active	1	3/14/06	12/6/16	Field Soil Sampling
10.0013	Active	1	3/22/06	12/6/16	Groundwater Well Sampling
10.0016	Active	2	4/9/07	1/7/16	Field pH testing
10.0017	Active	1	6/18/13	5/10/16	Sample Courier Service
10.0020	Active	3	7/20/06	12/6/16	Restricted Soil
10.0021	Active	0	11/28/06	In review	Drinking Water (SDWA) Sample Collection
10.0022	Active	0	5/3/10	12/6/16	General Field Wipe Sampling Procedure
20.0000					**VOA Department**
20.0001	Active	2	4/30/07	5/26/16	Reagent and Standard Tracking VOC Lab.
20.0002A	Active	4	11/17/06	6/3/16	Measurement of Purgeable Organic Compounds in Water By Capillary Column GC/MS (EPA Method 524.2)
20.0003	Active	1	9/16/98	5/2/16	Balance Calibration and Verification
20.0004	Active	8	4/18/11	5/26/16	Gasoline Range Organics(GRO)
20_1311	Active	3	10/9/15	5/2/16	TCLP for VOCs
20.8260B	Active	10	3/13/09	7/7/16	Volatile Organic Compounds by GC/MS: Capillary Column Technique (SW-846 Method 8260B)
20.8260C	Active	0	6/26/13	7/7/16	Volatile Organic Compounds by GC/MS: Capillary Column Technique (SW-846 Method 8260C)

Property of ESS LABORATORY

MASTER

Uncontrolled Document

20.5035	Active	9	3/18/09	7/7/16	Volatile Organic Compounds by GC/MS: Capillary Column Technique (SW-846 METHOD 5035)
20.VPH	Active	3	5/4/06	5/23/16	Volatile Petroleum Hydrocarbons
30.0000					**Metals Department**
30.0001	Active	2	10/8/02	5/31/16	Glassware Cleaning Metals Analysis
30.0002	Active	3	7/29/09	6/9/16	Mettler PM-4800 Balance Calibration and Verification
30.0003	Active	6	1/12/09	6/9/16	Reagent and Standard Tracking Metals Lab
30.0004	Active	1	1/30/12	6/9/16	Acid Volatile Sulfides & Simultaneously Extracted Metals in Sediment
30.0005	**Inactive**	0	1/26/15	1/22/16	OHAUS AP250D Balance Calibration and Verification
30.1311	Active	5	5/27/05	5/19/16	TCLP SW846 Method 1311
30.2009	Active	9	8/18/14	6/3/16	Determination of Trace Elements by Stabilized Temperature Graphite Furnace Atomic Absorption (Method 200.9/7000a)
30.2451	Active	5	8/18/14	6/10/16	Mercury Analysis for Aqueous Samples (Methods 245.1/ Sw846 7470a)
30.3005	Active	8	11/8/16	11/8/16	Acid Digestion of Waters for Total Recoverable or Dissolved Metals for analysis by GFA/ or ICP Spectroscopy (EPA 200.7 PREP/SW846 3005A)
30.3050B	Active	6	7/9/15	6/24/16	Acid Digestion for Metals in Soil/Sediment Samples for ICP And GFAA (SW-846 Methoc 3050B)
30.3060	Active	0	2/8/10	6/27/16	Hexavalent Chromium Alkaline Digestion Procedure
30.3111D	**Inactive**	0	12/06/07	7/12/13	Total Silica by Flame AA Spectroscopy
30.6010	Active	14	6/28/14	6/27/16	ICP-AES (SW 846 Method 6010C/ EPA Method 200.7)
30.6020	Active	1	8/18/14	6/27/16	ICP-MS (SW 846 Method 6020A/ EPA Method 200.8/MCP Method)
30.7196	Active	4	3/14/14	5/27/16	Hexavalent Chromium Method (SM3500-Cr B/SW846 Method 3060A/7196A)
30.7471	Active	4	6/29/10	6/27/16	Mercury Analysis for Soil Samples (SW846 Method 7471A and B)
40.0000					**Wet Chemistry Department**
40.0001	Active	2	6/20/16	6/20/16	Conductivity (SM2510; EPA 120.1; SW9050A)
40.0003	Active	2	12/4/06	3/22/16	Alkalinity (SM2320B)
40.0005	Active	5	3/25/14	3/28/16	BOD (5210B)
40.0006	Active	4	3/6/12	3/23/16	COD (EPA 410.4/SM5220D)
40.0007L	Active	3	8/2/12	2/29/16	Chloride (Lachat) (SM4500-Cl-E and EPA 9250)

Property of ESS LABORATORY

MASTER

40.0008	Active	3	12/14/09	3/28/16	Residual Chlorine (SM4500-Cl G
40.0008Amp	Active	2	1/30/07	2/29/16	Residual Chlorine (SM4500-Cl D)
40.0009	Active	7	2/8/11	2/9/16	Total Cyanide by Distillation (All Methods)
40.0010L	Active	5	8/7/07	2/10/16	Nitrogen, Nitrate (Lachat) (EPA 353.2)
40.0011	Active	4	6/20/05	3/28/16	Nitrogen, Nitrite (Manual) (EPA 353.3; SM4500-NO2 B)
40.0011L	Active	4	6/20/05	2/22/16	Nitrogen, Nitrite (Lachat) (EPA 353.2)
40.0014B	Active	3	7/25/06	3/16/16	Phosphorus (all forms) (EPA 365.3)
40.0014L	Active	5	8/7/07	3/30/16	Phosphorus (all forms) (Lachat) (EPA 365.1)
40.0015	Active	2	5/1/08	3/28/16	Phenols, Total Recoverable (EPA 420.1; SW9065)
40.0016	Active	3	10/25/10	7/19/16	pH (EPA 150.1; SW9040C; SM4500-H^+B)
40.0017	Active	2	4/29/15	3/30/16	Sulfate (EPA 375.4; SW9038; SM4500-SO4-E)
40.0018	Active	1	4/19/07	3/31/16	Sulfide (SM4500-S^{2-}D)
40.0019B	Active	1	5/15/07	2/10/16	TKN (EPA 351.2)
40.0019-ISE	Active	4	1/8/08	2/10/16	TKN (SM4500- NH_3 D)
40.0020A	Active	5	3/16/06	4/6/16	Total Dissolved Solids(SM2540 C)
40.0021A	Active	3	11/2/04	4/6/16	Total Suspended Solids(SM2540 D)
40.0022A	Active	3	3/16/06	4/6/16	Total Solids (SM2540 B)
40.0023	Active	3	11/8/16	11/8/16	Turbidity (EPA 180.1)
40.0024L	Active	4	2/12/08	2/11/16	Ammonia by Lachat (EPA Method 350.1)
40.0024ISE	Active	2	6/2/09	3/28/16	Ammonia by Ion Selective Electrode (SM4500-NH_3 D)
40.0025I	**Inactive**	3	5/1/08	—	Anions by Ion Chromatography (Method EPA 300.0/SW846-9056A)
40.0025W	Active	0	6/2/09	3/28/16	Anions by Ion Chromatography (Method EPA 300.0/SW846-9056A -Waters Instrumentation)
40.0026	Active	1	11/02/98	3/30/16	Reactivity (SW846 Methods 7.3.3.2 & 7.3.4.2)
40.0028	**Inactive**	0	12/28/00	—	MBAS
40.0029	Active	1	12/2/08	4/6/16	Total Volatile Solids(EPA 160.4; SM2540 E)
40.0030	Active	0	4/20/07	2/11/16	Settleable Solids(EPA 160.5; SM2540 F)
40.0033	Active	0	4/6/99	2/29/16	Color (HACH Method)
40.0036	Active	3	8/15/07	3/14/16	Balance Calibration & Verification
40.0039	Active	4	1/12/09	3/14/16	Reagent and Standard Tracking
40.0040	Active	0	8/11/04	3/14/16	Silica, Dissolved (HACH Method; SM4500-SiO_2 D)
40.0041	Active	2	10/18/10	3/14/16	Acidity (SM2310B)
40.0042	Active	1	9/16/06	3/14/16	Salinity (SM2520B)
40.0044	Active	0	2/3/09	3/14/16	Mc Laughlin Oil Testing Procedure

MASTER

40.0045	Active	0	7/20/09	3/14/16	Sulfite
40.0046	Active	0	2/8/10	4/18/16	ORP/Eh – Electrometric Measurement (SM2580)
40.0047	Active	0	3/26/14	3/25/16	Determination of Formaldehyde by HPLC
40.0048	Active	0	6/17/15	3/24/16	Iron, Ferrous by HACH Method 8146
40.9060-Aq	Active	2	1/15/16	7/11/16	Total Organic Carbon (Methods 5310B and 9060A)
40.9060-LK	Active	0	2/10/16	4/26/16	Total Organic Carbon (Lloyd-Kahn Method)
40.9041A	Active	0	8/20/01	3/15/16	pH Paper Method (SW846 9041A)
40.9045	Active	1	7/28/16	8/2/16	Soil and Waste pH (SW846 9045C)
40.9095A	Active	1	4/28/10	3/15/16	Paint Filter (SW846 9095A)
50.0000					**Organic Preparation Department**
50.EPH	Active	5	2/15/08	10/24/16	EPHs (State of Mass.)
50.NJ-EPH	Active	1	4/21/14	1/4/16	Extractable Petroleum Hydrocarbons per NJDEP Method 10/08 Rev.3
50.0001	Active	2	6/22/05	11/3/16	Glassware Cleaning Organic Prep
50.0002	Active	3	7/29/09	11/3/16	Balance Calibration (Ohaus TS-400D)
50.0006	Active	4	1/12/09	10/19/16	Reagent and Standard Tracking Organic Prep.
50.1664	Active	4	6/23/11	3/29/16	Organic Prep for TPH and O&G by Hexane extraction
50.1010	Active	3	11/1/16	11/1/16	Flashpoint (Closed Cup) and Ignitability
50.3510C	Active	11	3/25/14	11/4/16	Sep. Funnel Liquid-Liquid Extraction
50.3520	Active	5	4/30/13	11/4/16	Continuous Liquid-Liquid Extraction
50.3540C	Active	3	5/2/07	11/4/16	Soxhlet Extraction
50_3540Fish	**Inactive**			—	Fish Homogenization and Lipid Determination and Removal
50.3541	Active	3	8/14/07	11/4/16	Automated Soxhlet Extraction
50.3546	Active	1	8/14/07	11/8/16	Microwave Extraction
50.3580A	Active	3	7/28/05	11/8/16	Organic Prep. Waste Dilution
50.3620B	Active	1	2/14/08	11/23/16	Florisil Cleanup for Pest./PCBs
50.3640A	**Inactive**	1	11/7/02	—	Gel Permeation Cleanup
50.3660B	Active	1	8/20/08	11/8/16	Sulfur Cleanup by Copper Powder
50.3665M	**Inactive**	1	8/21/02	11/8/16	Sulfuric Acid Clean-up For PCBs
50.3665A	Active	0	10/19/09	11/8/16	Sulfuric Acid/Permanganate Clean-up For PCBs
50.CARBOPREP	Active	1	12/4/07	11/8/16	Carbo-Prep Sep-Pak Cartridge Cleanup for Pesticides
50_DeWater	**Inactive**	0	8/30/01	—	Sediment Sample De-Watering Procedure
50.9071Mod	Active	0	9/11/06	11/9/16	Oil & Grease in Sludge and Sediment samples
OP Spikes Chart	Active	3	3/14/13	11/8/16	Organic Prep Spikes Chart

Property of ESS LABORATORY

MASTER

Uncontrolled Document

60.0000					**Semi-VOA Department**
60.0001	Active	2	5/2/07	7/7/16	Reagent and Standard Tracking SVOC Lab
60.0002	Active	1	7/24/06	9/29/16	PCBs in Trans.Fluid and Waste Oils
60_3140	**Inactive**	1	3/2/05		Perchlorates
60_5041	Active	2	9/13/11	5/23/16	EDB, DBCP & 1,2,3-Trichloropropane (EPA Methods 504.1 and 8011)
60_5522	Active	2	11/17/06	11/15/16	Haloacetic acids
60_8151A	Active	2	2/8/11	11/16/16	Chlorinated Herbicides by GC/ECD (EPA Method 8151A)
60.8081	Active	7	11/8/12	11/28/16	Pesticides by GC/ECD
60.8082	Active	6	11/8/12	11/16/16	PCB Arochlors by GC/ECD (Methods 608 and 8082)
60.8082Cong	Active	2	7/31/14	11/16/16	PCB congeners by GC/ECD
60.8100	Active	5	10/15/13	5/3/16	TPH (Methods 8100-Mod and CT ETPH)
60.8270	Active	8	8/12/14	11/16/16	Semivolatile Organics by GC/MS
60.8330	**Inactive**	2	1/6/09		Nitroaromatics and Nitroamines by High Performance Liquid Chromatography
60_DRO	Active	7	9/23/13	In revision	Diesel Range Organics (Methods 8015 B,C & D)
60_RSK-175	Active	1	6/10/08	11/10/16	Methane, Ethane and Ethene by GC of Sample Headspace
60_Glycols	Active	2	4/2/10	11/10/16	Glycols by GC/FID
70.0000					**Administration Department**
70.0002	Active	4	2/19/15	3/17/16	Data Flagging
70.0003	Active	3	10/20/09	7/21/16	Purchasing
70.0004	Active	4	5/29/13	3/30/16	Work Order Management Procedure
70.0005	Active	4	5/29/13	In review	Level III and IV Data Review
70.0006	Active	0	4/14/03	5/10/16	0.Barcoding
70.0007	Active	3	5/14/14	6/6/16	Data Entry and Data Reporting – Element LIMS
70.0008	Active	2	5/30/13	7/11/16	Sample Login
80.0000					**Quality Assurance**
80.0004	Active	4	9/26/05	11/10/16	QA Data Package Review
80.0009	Active	4	9/5/07	11/10/16	Incident/Corrective Action
80.0012	Active	2	4/6/07	11/16/16	Document Control
80.0013	Active	3	10/27/09	11/16/16	Reagent Review and Tracking
80.0015	Active	1	5/21/09	11/16/16	Review of QA
80.0016	Active	3	4/6/07	11/17/16	Training
80.0018	Active	0	10/28/98	11/17/16	Continuing Education Process
80.0020	Active	0	10/28/98	11/10/15	Vendor Qualification

MASTER

Uncontrolled Document

80.0024	Active	1	11/26/02	11/17/16	Process Validation
80.0026	Active	0	10/28/98	7/12/16	Proficiency Testing
80.0028	Active	0	10/28/98	11/17/16	QC Procedure
80.0029	Active	1	8/4/00	7/12/16	Management of Procedure Documents
80.0034	**Inactive**	0	10/28/98	7/23/08	Occurrence Reporting and Follow-up
80.0035	Active	3	9/23/09	11/17/16	Internal Assessment
80.0040	Active	2	4/15/13	11/7/16	Logbook Use, Review, and Control
80.0044	Active	0	12/9/98	6/27/16	Laboratory Contingency Plan
80.0047	Active	1	6/2/04	7/15/16	Computer Validation
80.0048	Active	1	9/11/06	5/25/16	Sub-contract
80.0049	Active	2	10/17/07	7/15/16	Data Integrity Plan
80.0050	**Inactive**	0	3/10/09	5/16/14	A2LA Requirements
80.0051	Active	0	5/2/13	6/27/16	Requests, Tenders and Contracts
LQAP	Active	15	1/1/16	3/4/16	Laboratory Quality Assurance Plan
Policy Manual	Active	0	8/1/07	11/23/16	Job Descriptions
GMP/GLP	Active	1	11/10/09	1/5/16	Good Manufacturing Practices/Good Laboratory Practice Training
EQMT INV	Active	0	2/16/10	11/15/16	Equipment Inventory
SAP	Active	0	12/13/10	7/12/16	Sample Acceptance Policy
LOGLIST	Active	1	8/24/11	11/16/16	List of Log Books by Department
SOPMASLIST	Active	1	8/24/11	9/6/16	Current SOP Master List
INITIALS & SIGNATURES	Active	0	1999	11/16/16	List of Employee Initials & Signatures
90.0000					**Safety**
90.0001	Active	3	5/5/08	7/28/16	Laboratory Chemical Hygiene Plan
90.0002	Active	4	5/5/09	7/28/16	Pollution Prevention and Haz. Waste Cont. and Emergency Response Plan
90_0003	Active	3	3/20/07	7/28/16	Hazard Communication Program
90_0004	Active	2	2/28/07	7/28/16	Safety and Hazardous Communication Program Training
90_0005	Active	0	5/5/09	7/28/16	Respiratory Protection Policy
110.0000					**Quality Control**
110.0003	Active	1	12/4/07	7/12/16	De-ionized Water System Testing
110.0005	Active	4	11/4/16	11/4/16	Volumetric Ware Calibration
110.0010	Active	1	8/17/09	11/23/16	In-House Thermometer Calibration and Tracking
110.0012	**Inactive**	0	11/2/98		Weight Calibration and Tracking
110.0013	Active	3	4/4/07	7/15/16	Method Detection Limit

MASTER

Property of ESS LABORATORY

Uncontrolled Document

110.0014	Active	3	3/21/09	7/12/16	Control Charts
110.0015	Active	1	12/9/98	11/23/16	Lab Security
110.0016	Active	1	7/16/09	11/23/16	Manual Integration Policy and Procedure
110.0017	Active	0	6/14/04	11/23/16	Tentatively Identified Compounds
120.0000 (ESS Lab Internal Ref Nos.)	***ISO / TNI Status***	***Rev # or Date***	***ESS Date Initiated***	***ESS last review date***	***ISO/ NELAC/State Documents and Checklists/Audits (ISO/ NELAC/State Incorporated by reference)***
120.0007	Active	2	5/15/05	11/23/16	ISO/IEC 17025:2005
120.0012	Active	9/09	9/1/2010	11/23/16	The NELAC Institute Standard EL-V1M2_V1M4 - 2009
120.0013	Active		6/2009	6/12/16	Commonwealth of Massachusetts DEP Regulations 310 CMR 22.0, 42.0 & 40.1600
120.0014	Active		5/2008	6/12/16	State of Rhode Island Drinking Water, Lab Certification & Remediation Regs.
120.0016	Active		11/24/15	11/24/15	Checklist: TNI Standard Module 4 - Quality Systems for Chemical Testing
120.0017	Active		11/24/15	11/24/15	Checklist: TNI Standard Module 2 - Quality Systems for Chemical Testing
120.0018	Active		11/24/15	11/24/15	Annual Systems Audit – TNI Module 2
120.0019	Active		11/24/15	11/24/15	Annual Systems Audit – TNI Module 4
120.0020	Active		11/24/15	11/24/15	Annual Systems Audit – TNI Module 1

MASTER

Property of ESS LABORATORY

Uncontrolled Document

Appendix B

Laboratory Organization Chart

(The most current chart can be obtained from the Quality Manager or Lab Director.)

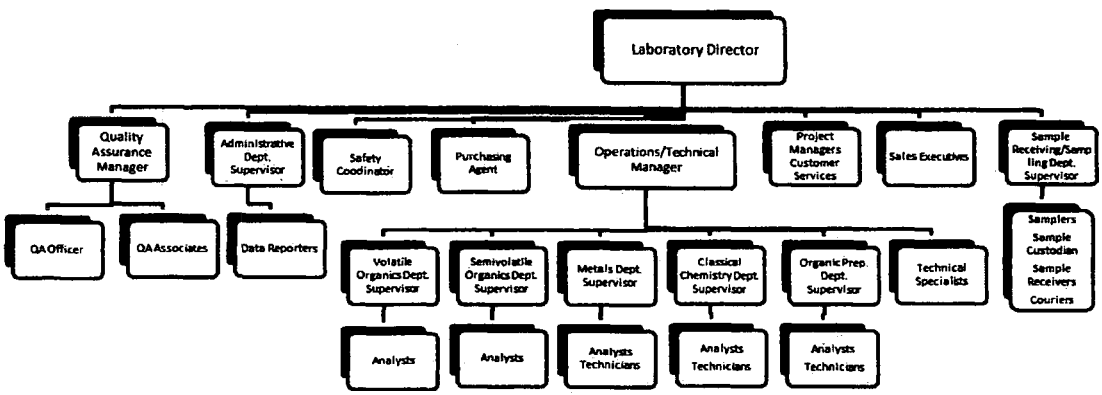

Property of ESS LABORATORY

Revised: 12/14/2016

ESS Laboratory

South: 185 Frances Avenue, Cranston, RI 02910-2211 - Phone: (401) 461-7181 Fax: (401) 461-4486
North: 5 Avenue D, Hopkinton, MA 01748 – Phone (508) 435-9244 Fax: (508) 435-9912
Thielsch Engineering: 195 Frances Avenue, Cranston, RI 02910-2211 - Phone: (401) 467-6454 Fax: (401) 467-2398
BAL Laboratory: 185 Frances Avenue, Cranston, RI 02910-2211 – Phone: (401) 785-0241 Fax: (401) 785-2374

Extension Directory

Baanante, Eric	3087	Operations Manager
Badger, Jim	3060	QA/QC Manager
Bauer Moreno, Ines	3068	Semivolatile Organics Supervisor
Braga, Kevin	3065 / 401-578-2036	Senior Account Executive
Denomme, Michael	3067	Volatile Organics Supervisor
Desrosiers, Shawn	sdesrosiers@thielsch.com	IT/LIMS Administrator
Foley, Elizabeth	508-333-1993	QA/QC Officer
Hardy, Jason	3046	Organic Prep
Hutchinson, Edith	3099	Project Management Supervisor
Janak, Dianne	3288	Sample Receiving Supervisor
Langer, Daryl	3906	Inorganics Supervisor (2nd Shift)
Maslen, Adriana	3209	Purchasing
Minot, Erin	3047	Wet Chemistry Group Leader
Mirenda, Michelle	3056	Logistics/Courier Supervisor & Project Manager
Pagliarini, Melissa	3081	Administration Supervisor
Rose, Nancy	3906	Inorganics Supervisor
Stoddard, Laurel	3066	Laboratory Director

MASTER

Appendix C

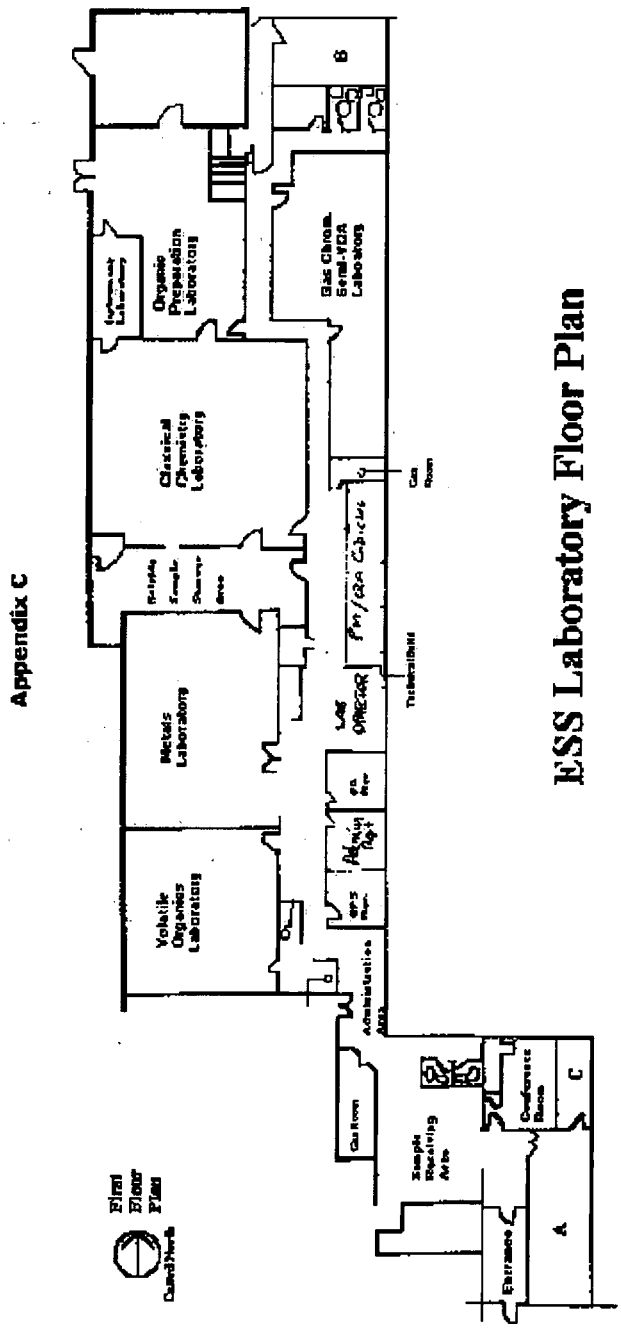
ESS Laboratory Floor Plan
Appendix C
Property of ESS LABORATORY
A Storage Area
B Hazardous Waste Storage Area
C Solvent Storage (Explosion Proof)
First Floor Plan
Organic Preparation Laboratory
Gas Chrom. Semi-VOA Laboratory
Classical Chemistry Laboratory
Metals Laboratory
Volatile Organics Laboratory
Conference Room
Sample Receiving Area
Entrance
A
B
C

Appendix D

Analytical Methods

ANALYTE	POTABLE	NON-POTABLE	SOLIDS/WASTE
METALS			
Aluminum	200.7, 200.8	200.7, 6010C, 200.8, 6020A	6010C, 6020A
Antimony	200.9, 200.8	200.7, SM3113B, 6010B/C, 7010, 7041, 200.8, 6020A	6010C /7041, 200.8
Arsenic	200.9, 200.8	200.7, SM3113B, 6010C, 7010, 7060A, 2008, 6020A	6010C /7060A, 200.8, 6020A
Barium	200.7, 200.8	200.7, 6010C, 200.8, 6020A	6010C, 6020A
Beryllium	200.7, 200.8	200.7, 6010C, 200.8, 6020A	6010C
Boron	200.7	200.7, 6010C	6010C, 6020A
Cadmium	200.7, 200.8	200.7, SM3113B, 6010C, 7010, 200.8, 6020A	6010C, 6020A
Chromium	200.7, 200.8	200.7, 6010C, 200.8	6010C, 6020A
Chromium - Hexavalent	SM3500-Cr D	SM3500-Cr D, 7196A	7196A
Cobalt	200.7	200.7, 6010C, 200.8, 6020A	6010C, 6020A
Copper	200.7, 200.8	200.7, SM3113B, 6010C, 7010, 200.8	6010C /7211
Iron	200.7, 200.8	200.7, 6010C, 200.8, 6020A	6010C, 6020A
Lead	200.9, 200.8	200.7, SM3113B, 6010B/C, 7010, 7421	6010C 7421, 6020A
Manganese	200.7, 200.8	200.7, 6010C, 200.8, 6020A	6010C, 6020A
Mercury	245.1	245.1/7470A	7471A
Molybdenum	200.7	200.7, 6010C, 200.8, 6020A	6010C, 6020A
Nickel	200.7, 200.8	200.7, 6010C, 200.8, 6020A	6010C, 6020A
Selenium	200.9, 200.8	200.7, SM3113B, 6010C, 7010, 7740, 200.8, 6020A	6010B/C /7740, 200.8, 6020A
Silver	200.7, 200.8	200.7, SM3113B6010C, 7010, 200.8	6010C, 6020A
Strontium	200.7	200.7, 6010C	6010C
Thallium	200.9, 200.8	200.7, 279.26010C, 7010, 7841, 2008, 6020A	6010C /7841, 200.8, 6020A
Tin		200.7, 6010C	6010C
Titanium		200.7, 6010C	6010C
Vanadium	200.7, 200.8	200.7, 6010C, 200.8	6010C, 6020A
Zinc	200.7, 200.8	200.7, 6010C, 200.8, 6020A	6010C, 6020A
MINERALS			
Calcium	200.7	200.7, 6010C	6010C
Hardness	200.7	200.7, 6010C	6010C
Magnesium	200.7	200.7, 6010C	6010C
Potassium	200.7	200.7, 6010C	6010C
Sodium	200.7	200.7, 6010C	6010C
Volatile Organic Compounds	524.2	624, 5030/8260B/C	5035/8260B/C
Haloacetic Acids	552.2	X	X

Property of ESS LABORATORY
MASTER

EDB/DBCP	504.1	8011	X
Methane, Ethane & Ethene, by head- space Analysis	X	RSK-175	X
PESTICIDES	X	608, 8081B	8081B
PCB'S		608, 8082A	8082A
PCB's in Oil	X	EPA 600/1-87-014 8082A	EPA 600/4-81-045 8082A
		EPA 600/4-81-045	
BNA Extractables	X	625, 8270D	8270D
Low Level PAHs	X	8270SIM	8270SIM
Oil and Grease (Hexane)	X	1664	9071B
Total Petroleum Hydrocarbons	X	1664/8100M/DRO/CtEPH	8100M/DRO/CtEPH
Volatile Petroleum Hydrocarbon	X	GRO (8015), MADEP VPH	GRO (8015), MADEP VPH
Extractable Petroleum Hydrocarbon, Mass , Maine & New Jersey	X	DRO(8015), MADEP EPH,	DRO(8015), MADEP EPH, NJDEP EPH
Herbicides	X	8151A	8151A
Total Organic Carbon	SM 5310B	SM 5310B/9060A	9060A
INORGANICS			
Acidity	SM2310B	SM2310B	X
Alkalinity	SM2320B	SM2320B	SM2320B*
Ammonia	X	350.1, SM4500-NH3 D	350.1
BOD	X	SM5210B	X
COD	X	410.4, SM5220 C, HACH 8000	X
Chloride	300.0	300.0, SM4500-Cl-E, 9056A, 9250	9056A*, 9250*
Cyanide	4500CN C,E	9010, 9014, SM4500CN C,E	9010/9014
Flashpoint	X	X	1010
Fluoride	300.0	300.0, 9056A	X
Formaldehyde	X	8315A/1667 Rev. A Mod	X
Hardness	SM2340B	SM2340B, 6010B/C	6010C
Iron, Ferrous	X	HACH 8146	X
MBAS	5540 C	5540 C	5540 C
Nitrate	353.2	300.0, 353.2, 9056A	353.2*, 9056A*
Nitrite	353.2	300.0, 353.2, SM4500-NO2 B, 9056A	353.2*, 9056A*
Orthophosphate	365.1	300.0, 365.1, 365.3, 9056A	365.1*, 365.3*, 9056A*
Paint Filter	X	X	9095A
pH	150.1 SM4500-H^+ B	SM4500-H^+ B	9040, 9045C

MASTER

Property of ESS LABORATORY

Reactive Cyanide	X	X	7.3.3.2
Reactive Sulfide	X	X	7.3.4.1
Settleable Solids	X	SM2540F	X
Silica	X	SM4500-SiO_2 D	X
Specific Conductance	SM2510B	120.1, SM2510B	9050A*
Sulfate	300.0, 4500-SO_4-E	300.0, 9038, 9056A	9038*, 9056A*
Sulfide	HACH	HACH, SM4500-S^{2-}D	X
Sulfite	X	SM4500-SO_3 B	X
Total Dissolved Solids	SM2540C	SM2540C	X
Total Suspended Solids	X	SM2540D	X
Total Kjehdahl Nitrogen	X	351.2, SM4500-NH3 D, SM4500 NORG B	X
Total Phenolics	X	420.1	9065
Total Phosphorous	X	300.0, 365.1, 365.3	365.1, 365.3
Total Residual Chlorine	SM4500-Cl D, G	SM4500-Cl D, G	X
Total Solids	X	SM2540B	SM2540B
Turbidity	180.1	180.1	X
Volatile Solids	X	160.4, SM2540 E	X
TCLP	X	X	1311
SPLP	X	X	1312
* Water Leach			

MASTER

Appendix E

Laboratory Accreditation/Certification/Recognition

ESS Laboratory maintains the following certifications and accreditations with numerous state and national entities:

State/Federal Organization	Certificate Number
Connecticut DPH	PH-0750
Maine DEP	RI00002
Massachusetts DEP	M-RI002
New Hampshire DOH (NELAP Primary Accreditation Agency)	2424
New York State DOH	11313
Rhode Island DOH	LAI00179
New Jersey DEP	RI006
Pennsylvania DEP	68-01752
USDA (Foreign Soil Permit)	P330-15-00235

The certificates (with expiration dates) and parameter lists (which may differ) for each organization are filed in the QA Dept. files and may also be found in client reports, on the ESS Laboratory website and on the websites of the organizations identified above. Links to these organization websites are supplied in all clients' certificates of analysis

If accreditation is terminated or suspended, the laboratory will immediately cease to use the certificate number reference in any way and inform clients impacted by the change.

MASTER

Appendix G

CONFLICT OF INTEREST AND UNDUE PRESSURE

It is the policy of ESS Laboratory to identify conflicts of interest involving the Laboratory and related parties, as well as to identify situations which may give rise to the appearance of a conflict of interest, and to address such conflicts and situations in a manner that will fully protect the integrity and reputation of the Laboratory, as well as related parties. All employees are expected to use good judgment, to adhere to high ethical standards, and to act in such a manner as to avoid any actual or potential conflict of interest. A conflict of interest occurs when the secondary personal, professional, or business interests of an employee conflict with the primary interests of the Laboratory.

When a secondary interest has inappropriate weight in a decision and distorts the pursuit of a primary interest, it is exerting undue influence.This policy is intended to supplement but not replace any applicable state and federal laws governing conflict of interest which are applicable to commercial organizations.

Such a policy works best when it is preventive and corrective rather than punitive. However, when a professional's judgment is actually distorted by the acceptance of a gift, the violation is no longer principally a conflict of interest but becomes a different kind of offense, one that may involve malpractice, scientific misconduct, or kickbacks.

Procedures:

- Upon or before hire or appointment and subsequently during annual performance review, each employee (manager, supervisor or analyst) shall disclose all direct or indirect financial interests that might benefit their private interest or may give the appearance of undue influence from outside parties thereby potentially resulting in a conflict of interest. This disclosure will be kept on file and will be updated as needed.

- Should there be any dispute as to whether a conflict of interest exists, the Director shall determine whether a conflict of interest exists for an employee, and shall determine the appropriate, fair and reasonable response.

- If the Director has reason to believe an individual has failed to disclose actual or potential conflicts of interest, the Director will inform the member and allow him/her to explain the alleged failure to disclose. If the Director still has reason to believe a conflict of interest exists after the alleged conflict is explained, the Director will take appropriate corrective action.

MASTER

Principles for Identifying and Assessing Conflicts of Interest

The problem of conflict of interest is more complex than is often appreciated. As a result, both critics and defenders of conflict of interest policies sometimes misunderstand or misapply them.

A conflict of interest is not an actual occurrence of bias or a corrupt decision, but rather a set of circumstances that past experience and other evidence have shown poses a risk that primary interests may be compromised by secondary interests. Examples might be having financial interest in or working during off-hours for customer, competing or other companies, substance abuse etc. The existence of a conflict of interest does not imply that any individual is improperly motivated. To avoid these and similar misunderstandings and to provide guidance for formulating and applying such policies, a framework for assessing conflicts of interest is desirable.

Conflicts should be assessed by considering various factors that determine their likelihood and seriousness. Likelihood depends on the value of the secondary interest, the scope of the relationship between the professional and the secondary interest, and the extent of a professional's discretion. Seriousness depends on the value of the primary interest, the scope of the consequences that affect it, and the extent of accountability of the professionals. Conflict of interest policies should be evaluated by considering their effectiveness, transparency, accountability, and fairness.

MASTER

Appendix H

Chemistry
(Sections 1.5 and 1.6 of Technical Module TNI V1:M4)

The lab is considered to have satisfied the requirements on analytical uncertainty by following recognized test methods and reporting instructions, in the absence of project specific instructions. Refer to Section 27.

H.1 Method Validation

Reference methods are validated by determining the LOD or LOQ, and precision and bias using the procedures outlined below.

Unless otherwise specified, the procedure for validating chemistry methods must include procedures for determining:

Establishment of SOPs

Limit of Detection (LOD) (must be in each quality system matrix to be used in the laboratory)

Limit of Quantitation/ Lower Limit of Quantitation (LOQ/LLOQ) - must be in each quality system matrix to be used in the laboratory

Evaluation of Precision and Accuracy (Bias)

Evaluation of Selectivity (see Section 27.2.1.2)

Demonstration of Capability

Calibration and calibration verification

Before any non-standard method is used in the laboratory, the laboratory determines the data quality indicators that must be used to ensure that the data are acceptable for the intended use. Based on the intended use, the laboratory establishes quality control acceptance criteria for precision, accuracy, selectivity (if applicable). Quality control procedures and acceptance criteria are consistent with those of similar standard methods or technologies, and must include the following:

i) Scope;

ii) Calibration and calibration verification;

iii) Interferences/Contamination, method/calibration blanks;

iv) Analyte identification;

v) Analyte quantitation;

Property of ESS LABORATORY
MASTER

vi) Selectivity;

vii) Sensitivity;

viii) Precision; and

ix) Bias.

Methods must be validated when modifications cause changes in stoichiometry, technology, mass tuning acceptance criteria, or quantitation ions to occur. Method modifications, as described in the Nov 20, 2007 USEPA Memorandum (incorporated here by reference) on method flexibility, are allowed.

a) Limit of Detection (LOD) (also see SOP 110.0013)

The Limit of Detection (LOD) is the laboratory's estimate of the minimum amount of an analyte in a given matrix that an analytical process can reliably detect in their facility.

LODs are not required for any component for which spiking solutions or quality control samples are not available. These include pH, temperature. If the laboratory is not reporting a value below the Limit of Quantitation, a Limit of Detection study is not required.

The laboratory will select methods with LODs that are expected to meet the intended data use.

LODs are determined in samples that represent the quality system matrices to be evaluated. All sample processing/preparation steps and all determinative steps are used to validate the method for all targeted analytes. The representative quality system matrix will be free from the target analytes of interest or interfering analytes that impact the LOD.

When the method or applicable regulation specifies a LOD study, only the specified method will be used. The laboratory documents the process used to derive the LOD and retains all the supporting data.

A Detection Limit (DL) is established based upon historical data or 40CFR Part 136 Appendix B (if required). The DL is used to determine the LOD for each analyte and matrix as well as for all preparatory and cleanup methods routinely used on samples.

After each DL determination, the laboratory establishes the LOD by spiking a quality system matrix at a concentration of at least 2 times but no greater than four times the DL (this procedure is based on the DoD QSM Standard requirement). This spike concentration establishes the LOD and the concentration at which the LOD shall be verified. It is specific to each suite of analyte, matrix, and method (including sample preparation/cleanup).

The following requirements apply to the initial LOD establishment and to the LOD verifications:

Property of ESS LABORATORY
MASTER

Once the LOD has been determined, the validity of the LOD is verified by detection of each target analyte in a quality control sample of a representative quality system matrix. The concentration of the analytes in the sample will be no more than 3 times the derived LOD unless the test contains multiple analytes. In the latter case, the concentration of the target analytes will be no greater than 4 times the LOD, per the TNI 2009 Standard. This verification will be performed on each instrument that is used for the test.

The LOD, if required, shall be verified for each quality system matrix, technology, and analyte. However, not all possible combinations of preparation and cleanup techniques are required to have LOD/LOQ verifications. If LOD/LOQ verifications are not performed on all combinations, the laboratory must base the LOD/LOQ verifications on the worst case basis (preparation method with all applicable cleanup steps).

i) The apparent signal to noise (S/N) ratio at the LOD must be greater than zero and should normally be at least three; the results must meet all method requirements for analyte identification (e.g., ion abundance, second column confirmation, or pattern recognition). For data systems that do not provide a measure of noise, the signal produced by the verification sample should produce a result that is at least three standard deviations greater than the mean method blank concentration. This is initially estimated based on a minimum of four method blank analyses and later established with a minimum of 20 method blank results.

ii) If the LOD verification fails, then the laboratory must perform and pass two consecutive LOD verifications at a higher spike concentration and set the LOD at the higher concentration.

iii) The laboratory shall maintain documentation for all DL determinations and LOD verifications.

iv) The DL and LOD must be reported for all analyte-matrix-methods suites, unless it is not applicable to the test or specifically excluded by project requirements.

The LOD shall be verified annually. In situations where methods are setup and used on an infrequent basis, the laboratory may choose to perform LOD (and LOQ) verifications on a one per batch basis. All verification data will be in compliance, reported, and available for review.

LODs are performed/repeated:

- before reporting the LOD for a given analyte
- any time there is a change that affects how the method is performed
- when there is a change in instrumentation that affects the sensitivity of the analysis.

b) Limit of Quantitation (a/k/a Lower Limit of Quantitation)

MASTER

The Limit of Quantitation (LOQ, LLOQ) is the minimum amount of a substance that can be reported with a specified degree of confidence.

If an LOD study is not performed, concentration values less than the Limit of Quantitation are not reported but are appropriately flagged.

LOQs are not required for components or properties for which spiking solutions or QC samples are not available. These include pH, temperature.

An LOQ study includes all sample processing and analysis steps in the analytical method. The study is performed for each analyte in each quality system matrix for which the test will be performed. The procedure is documented and all supporting data are retained.

The laboratory will verify the LOQ by the analysis of a QC sample containing the analytes of concern at a concentration of 1 to 2 times the derived (claimed) LOQ. The LOQ is considered verified if recovery of each analyte is within the laboratory's acceptance limits, or the client's data quality objectives. The LOQ must be greater than the LOD.

The LOQ will be verified annually for each quality system matrix, technology and analyte. However, the annual LOQ verification is not required if the LOD was determined or verified annually on that instrument.

c) Precision and Bias

Precision is the degree to which a set of observations or measurements of the same property, obtained under similar conditions, conform to themselves. Precision is usually expressed as standard deviation, variance, or range, in either absolute or relative terms.

Bias is the systematic error that contributes to the difference between the mean of a significant number of test results and the accepted reference value.

Precision and bias of a reference method is determined by using the Demonstration of Capability procedure (Section H.2 below).

Precision and bias using non-reference, modified reference or laboratory-developed methods are established using the procedure outlined as follows, and compared to the criteria established by the client (when requested), the method, or the laboratory.

Precision and bias are determined by processing samples through all phases of the method (sample preparation, cleanup, analysis, etc.) and are evaluated across the analytical calibration range of the method. This study is performed for all quality system matrices for which the test is to be used and the typical procedure is as follows:

1. Analyze in triplicate QC samples containing the analytes of concern at or near the limit of quantitation, at the upper-range of the calibration (upper 20%) and at a mid-range concentration.

Property of ESS LABORATORY
MASTER

2. Process these samples on different days as 3 sets of samples through the entire measurement system for each analyte of interest.
3. Each day, one QC sample at each concentration is analyzed.
4. A separate method blank shall be subjected to the analytical method along with the QC samples on each of the three days. (Note that the three samples at the LOQ concentration can demonstrate sensitivity as well).
5. For each analyst, calculate the mean recovery for each day, for each level over each day, and for all nine samples.
6. Calculate the relative standard deviation for each of the separate means obtained.
7. Compare the standard deviations for the different days and the standard deviations for the different concentrations.
8. If the different standard deviations are all statistically insignificant (e.g. F-test), then compare the overall mean and standard deviation with the established criteria from above.

d) Selectivity

Selectivity is the capability of a test method or instrument to respond to a target substance or constituent in the presence of non-target substances.

The laboratory evaluates selectivity using the procedures described in Section 27.2.1.2 of this QA plan and is defined further in the test method SOPs.

H.2 Demonstration of Capability

Demonstration of Capability (DOC): A procedure to establish the ability of the analyst to generate analytical results of acceptable accuracy and precision.

Before reporting any data with a given method, a satisfactory initial DOC is performed in accordance with H.2.(a) below and SOP 80.0016 (Training) Thereafter, each analyst demonstrates continuing proficiency through the procedures outlined in Ongoing Demonstration of Capability below.

a) Initial Demonstration of Capability (IDOC)

An IDOC is performed:

- Before using any method
- Each time there is a change in instrument type, personnel or method (or any change that could potentially affect the precision and bias, sensitivity or selectivity of the output), and
- If the laboratory or analysts has not performed the method in a preceding twelve-month period.

The IDOC(s) for each analyst is documented in the analysts' training files kept by the QA Dept. The document identifies the analyst(s) involved in preparation and/or analysis; matrix; analyte(s), class of analyte(s), or measured

MASTER

parameter(s); the method(s) performed; the laboratory-specific SOP used for analysis (including revision number); the date(s) of analysis; and a summary of the results used to calculate the mean recovery and standard deviations.

All raw data, preparation records, and calculations for each IDOC are retained and are available for review.

When methods specify procedures to be followed only those procedures will be used. If no procedures are specified, the laboratory uses its own procedure (per SOP 80.0016 and below). SOP 80.0016 is documented in the QA Dept. master SOP files and also in the relevant departmental files.

Process for Initial DOC:

a) A quality control sample is obtained from an outside source. If not available, the QC is prepared using stock standards that are prepared independently from those used in instrument calibration.

b) The analyte(s) is diluted in a volume of clean quality system matrix sufficient to prepare four aliquots at the concentration specified, or if unspecified, to a concentration of 1-4 times the limit of quantitation.

c) At least four aliquots are prepared and analyzed according to the test method either concurrently or over a period of days.

d) Using all of the results, calculate the mean recovery in the appropriate reporting units and the standard deviations of the population sample (in the same units) for each parameter of interest. When it is not possible to determine mean and standard deviations, such as for presence/absence and logarithmic values, the performance is assessed against established and documented criteria.

e) Compare the information from (d) above to the corresponding acceptance criteria for precision and accuracy in the test method (if applicable) or in laboratory-generated acceptance criteria (if mandatory criteria have not been established). If all parameters meet the acceptance criteria, the analysis of actual samples may begin. If any one of the parameters do not meet the acceptance criteria, the performance is unacceptable for that parameter. The acceptance criteria must be defined prior to the analyst performing the method.

f) When one or more of the tested parameters fail at least one of the acceptance criteria, the analyst must proceed according to 1) or 2) below.

   1. Locate and correct the source of the problem and repeat the test for all parameters of interest beginning with c) above.

   2. Beginning with c) above, repeat the test for all parameters that failed to meet criteria.

Repeated failure, however, confirms a general problem with the measurement system. If this occurs, the source of the problem is

MASTER

located and corrected and the test repeated for all compounds of interest beginning with c).

b) Ongoing Demonstration of Capability

After the demonstration of capability is completed, on-going proficiency is maintained and demonstrated at least annually. Each analyst is expected to consistently meet the QC requirements of the method, the laboratory SOP, client requirements and/or the TNI Standard. Ongoing DOCS are documented in the analysts' training files kept by the QA Dept. and all records related to the demonstration are retained.

The laboratory uses the following procedure described in SOP 80.0016 and below to demonstrate ongoing DOC:

Process for Ongoing (a/k/a Continuing) DOC:

a) acceptable performance of a blind sample (single blind to the analyst). Successful analysis of a blind performance sample on a similar method using the same technology (e.g., GC/MS volatiles by purge and trap for Methods 524.2, 624 or 5030/8260) would only require documentation for one of the tests.;

b) another initial DOC;

c) at least four (4) consecutive (as listed chronologically in the LIMS database) laboratory control samples with acceptable levels of precision and accuracy. The laboratory shall determine the acceptable limits for precision and accuracy prior to analysis. The laboratory shall tabulate or be able to readily retrieve four (4) consecutive passing laboratory control samples (LCS) for each method for each analyst each year;

d) a documented process of analyst review using quality control (QC) samples. QC samples can be reviewed to identify patterns for individuals or groups of analysts and determine if corrective action or retraining is necessary; or

e) if a) through d) are not technically feasible, then analysis of real-world samples with results within predefined acceptance criteria (as defined by the laboratory or method) shall be performed.

H.3 Calibration

Section 23.2.2 includes information on calibration of support equipment. This Section covers calibration of analytical equipment.

Initial instrument calibration and continuing instrument calibration verification are an important part of ensuring data to be of known and documented quality. If more stringent calibration requirements are included in a mandated method or by regulation, those calibration requirements override any requirements outlined here or in laboratory SOPs. Generally, procedures and criteria regarding instrument calibrations are provided in test SOPs.

MASTER

H.3.1 Initial Instrument Calibration

- Records:

  Initial instrument calibration includes calculations, integrations, acceptance criteria, and associated statistics referenced in the test method SOP.
  Sufficient raw data records are collected and retained to allow reconstruction of the initial instrument calibration. These include, at a minimum, calibration date, test method, instrument, analysis date, analyte names, analysts signature or initials, concentration and response, calibration curve or response factor, or unique equation or coefficient used to reduce instrument responses to concentration.
  Calibration date and expiration date (when recalibration is due) is documented for equipment requiring calibration, where practicable (see Section 23.1).

- Number of Standards and Concentrations:

  If the reference or mandated method does not specify the number of calibration standards to use, the minimum number is three for inorganic analyses and five for organic analyses, not including blanks or a zero standard, except as noted below. All reported analytes and surrogates shall be included in the initial calibration. Reported results for all analytes and surrogates shall be quantified using a multipoint calibration curve, except as noted above. Exclusion of calibration points without a scientifically valid technical justification is not permitted.
  For instrumentation where single point calibration is recommended by manufacturer's instructions, such as with some ICP and ICP/MS technologies (with a zero and single point calibration), the following apply:

  a) For single point plus zero blank calibrations, the zero point and the single point standard are analyzed prior to the analysis of samples, and the linear range of the instrument established by analyzing a series of standards, one of which is at the lowest quantitation level.

  b) Zero blank and single point calibration standards are analyzed with each analytical batch for methods where they are specified.

  c) A standard corresponding to the limit of quantitation is analyzed with each analytical batch and must meet established acceptance criteria when using single point plus zero blank calibrations.

  d) The linearity of single point plus zero blank calibrations is verified at a frequency established by the method or the manufacturer.

  The lowest calibration standard is the lowest concentration for which quantitative results can be reported without qualification. The lowest calibration standard is at or below the Limit of Quantitation (LOQ) and is greater than the Limit of Detection. Results that are less than the LOQ are considered to have increased uncertainty, and are either reported with a qualifier code or explained in the case narrative.

  The highest calibration standard is the highest concentration for which quantitative results can be reported. Data reported exceeding the highest

Property of ESS LABORATORY
MASTER

calibration standard without dilutions (which must be done if sufficient sample volume and holding time permit) is considered to have increased uncertainty and are reported with a qualifier code or reanalyzed and explained in the case narrative. However, for metals analysis with a single point calibration, the laboratory may report a sample result above the quantitation range if the laboratory analyzes and passes a CCV that exceeds the sample concentration but is within the linear dynamic range.

- Evaluation, Verification and Corrective Action

All initial instrument calibrations are verified with a standard obtained from a second source traceable to a national standard when commercially available. If a second source is not available, a standard prepared from a different lot (independently prepare from different source materials) may be used. Concentration of the second source shall be at or near the midpoint of the calibration range.

Criteria for the acceptance of an initial instrument calibration is established (e.g., correlation coefficient or relative percent difference) and defined in the test SOP. The criteria used are appropriate to the calibration technique and must be at least as stringent as those for the continuing calibration verification (CCV).

Where appropriate, the laboratory has manual integration procedures (SOP 110.0016 (Manual Integration Policy and Procedure) that are adhered to when evaluating calibration data.

Any samples that are analyzed after an unacceptable initial calibration are re-analyzed or the data are reported with qualifiers, appropriate to the scope of the unacceptable condition (see Section 12 - "Control of Nonconforming Environmental Testing").

Quantitation is always determined from the initial calibration unless the test method or applicable regulations require quantitation from the continuing instrument calibration verification.

Corrective actions are performed when the initial calibration results are outside acceptance criteria. Calibration points are not dropped from the middle of the curve unless the cause is determined and documented. If the cause cannot be determined, the calibration curve is re-prepared. If the low or high calibration point is dropped from the curve, the working curve is adjusted and sample results outside the curve are qualified.

H.3.2 Continuing Instrument Calibration

- Records

The calculations and associated statistics for continuing instrument calibration are included or referenced in the test method SOPs. The concentration of the CCV standard is greater than the low calibration standard and less than or equal to the midpoint of the calibration range. All CCVs must be analyzed and reported. If a CCV fails, reanalysis or corrective action must be taken.

MASTER

Sufficient raw data records are retained to allow reconstruction of the continuing instrument calibration verification. Continuing instrument calibration verification records connect the continuing verification date to the initial instrument calibration.

Where appropriate, the laboratory has manual integration procedures, detailed in SOP 110.0016, that are adhered to when evaluating calibration data.

- Frequency

  Calibration shall be verified for each compound, element, or other discrete chemical species, except for multi-component analytes such as aroclors, chlordane, total petroleum hydrocarbons, or toxaphene, where a representative chemical, related substance or mixture can be used.

  Calibration verifications are performed:

  - at the beginning and end of each analytical batch. For methods employing internal standards, a single verification is performed at the beginning of the analytical batch, per the TNI Standard. Some methods have more frequent CCV requirements (see specific SOPs). Many inorganic methods require the CCV to be analyzed after every 10 samples.
  - whenever it is expected that the analytical system may be out of calibration or might not meet verification acceptance criteria.
  - when the time period for calibration or the most recent calibration verification has expired.
  - for all analytical systems that have a calibration verification requirement. Requirements can be found in the method SOPs.
  - Before sample analysis, after every 10 field samples, and at the end of the analysis sequence, with the exception of CCVs for Pesticides multi-component analytes (i.e. Aroclors, Toxaphene, Chlordane, total petroleum hydrocarbons), where a representative chemical, related substance or mixture can be used.

- Evaluation, Verification and Corrective Actions

  The validity of the initial calibration is verified prior to sample analysis by use of a continuing instrument calibration verification (CCV) standard. CCV acceptance criteria are included in the test method SOPs.

  Corrective action is initiated for CCV results that are outside of acceptance criteria (see Section 12 – "Control of Nonconforming Environmental Testing" and below).

H.3.3 Unacceptable Continuing Instrument Calibration Verifications

If routine corrective action for continuing instrument calibration verification fails to produce a second consecutive (immediate-must start within one hour; no samples can be run between the failed CCV and the two additional CCVs) calibration

MASTER

verification within acceptance criteria, then a new calibration is performed or acceptable performance is demonstrated after corrective action with two consecutive calibration verifications.

For any samples analyzed on a system with an unacceptable calibration, some results may be useable if qualified and under the following conditions:

a) If the acceptance criteria are exceeded high (high bias) and the associated samples are below detection, then those sample results that are non-detects may be reported as non-detects.

b) If the acceptance criteria are exceeded low (low bias) and there are samples that exceed the maximum regulatory limit, then those exceeding the regulatory limit may be reported.

MASTER

Attachment 4

Dexsil L2000DX PCB/Chloride Analyzer Manual

Copyright Notice

L2000DX *User's Manual* and other documentation copyright © 1998 and 2001 Dexsil Corporation. All rights reserved.

Disclaimer

Dexsil Corporation makes no representations or warranties with respect to the contents hereof and specifically disclaims any implied warranties of merchantability or fitness for any particular purpose. Further, Dexsil Corporation reserves the right to revise this publication and to make changes from time to time in the contents hereof without obligation of Dexsil Corporation to notify any person of such revision or changes.

Trademarks

L2000 and Dexsil are trademarks of Dexsil Corporation.

DEXSIL CORPORATION
One Hamden Park Drive
Hamden, CT 06517
Tel (203) 288-3509
Fax (203) 248-6523
http://www.dexsil.com

Table of Contents

Introduction to the L2000DX Analyzer 1
- Sample Preparation 1
- Chloride Conversion Reaction 2
- Quantification 2

Unpacking 3
- List of Components 3
- L2000DX Analyzer Carrying Case With Contents 4
- List of Reagent Options 4
  - Option 1 - 40 Oil Tests 4
  - Option 2 - 20 Soil Tests 5
  - Option 2a - 20 Soil Tests (Two-Step Procedure) 5
  - Option 3 - 20 Water Tests 6
  - Option 4 - 20 Wipe Tests 6

Initial Set Up 7

Restoring the Electrode After Extended Storage 7

Basic Operation of the L2000DX 9

General Information 9

Turning the Analyzer On and Navigating the Operating Program 10
- Calibration 10
- Blank Determination 12
- Analysis 13
- Entering Data 14
- Special Keys 14
- Electrode Check 15

Sample Preparation 16

Oil Samples 16

Soil Samples 16
- Standard Procedure for Soil Analysis 17
- Two-Step Extraction Procedure for Soil Analysis 18

Water Samples 19
- High Range (5-2000 ppm) 19
- Low Range (10 ppb - 5 ppm) 19

Wipe Samples 19

The OPTIONS Menu 21

1.) Creating and Editing a Method 21
- Blank Subtraction 22
- Chlorine Content 23
- Size Correction 23
- Extraction Efficiency Correction 23
- Matrix 24
- Units 24

Analyte Label 24
Method Name 24
2.) Header Information 25
Operator ID 25
Customer ID 25
Job ID 25
Location ID 25
Comments 25
3.) Data Management 26
Storing Data 26
Clearing stored Data 27
4.) Printer Options 27
Printing Data Points When Taken 27
Printing Stored Data 27
Printing Header Information 28
Printing Method 28
5.) Date and Time 28
Entering Time 28
Entering Date 28
6.) Diagnostics 28
Checking Electrode Output 28
7.) Upload 29
8.) Set Temp 29
Entering Temperature 29
Accepting Temperature 29
L2000DX Data Manager 30
Introduction 30
Installation 30
Uploading Data 30
Selecting Data 30
Generating a Report 31
Exporting Data 31
Care and Maintenance 32
Changing Paper 32
General Care 33
Electrode Care and Maintenance 34
Trouble Shooting 34
Error Messages 36
Appendix A: Additional Information Available from Dexsil 38
Appendix B: Methods Table 40
Appendix C: Technical Data 42
Appendix D: Program Flow Chart 43

Introduction to the L2000DX Analysis System

Congratulations on your purchase of the L2000DX Analyzer, a versatile analysis system suitable for the analysis of a wide variety of chlorinated organic compounds in a variety of matrices. The basic principal of the L2000DX system is to measure the total organic chlorine content of a sample and equate that to an equivalent concentration of the target or expected analyte. If all of the organic chlorine present is assumed to be derived from the target analyte, then an upper limit is established for the compound in question. (If other organic chlorines are present, in addition to the target analyte, they will be counted as the target analyte.) To accomplish this, all of the organically bound chlorine must be converted into inorganic chloride and the resulting chloride quantified. Once the total chlorine content of the sample is known, a conversion factor is used to convert the chloride concentration into an equivalent concentration of the target analyte. If the contaminant is known, the resulting concentration estimates will accurately correlate with the actual concentration of the analyte in the sample as determined by GC analysis in the lab. If the contaminant is unknown, a conservative or worst case conversion factor is chosen to provide an upper limit for the concentration of the target analyte in the sample.

There are three basic steps involved in the chemical analysis for total halogen by the L2000DX:

- Sample Preparation
- Conversion to Inorganic Chloride
- Quantification

The sample preparation step determines the type of chlorine detected, i.e., organic, inorganic, or total, and is matrix dependent. The sample preparation can be as simple as collecting a transformer oil sample, or can involve the extraction of a soil or water sample. In the case of a wipe sample, the surface is wiped and the wipe-gauze is extracted. The steps involved in the conversion to inorganic chloride reaction and the chloride quantification are the same for all matrices. The steps in the conversion to inorganic chloride involves the reaction of the sample with metallic sodium and the extraction of the resulting chloride into an aqueous buffer system. A chloride specific electrode is used to quantify the extracted chloride. Using stored conversion factors, the chloride value is then converted to an equivalent concentration of analyte.

Sample Preparation

The L2000DX can be used to analyze the following matrices:

- Transformer Oil
- Soil
- Water
- Surface Wipe

Each matrix requires different preparation prior to the conversion reaction step and subsequent quantification. Each of the matrix preparation steps are described in detail under **Sample Preparation.**

The routine analysis of transformer oil requires no sample preparation other than to collect a clean sample without introducing any extraneous sources of chloride into the sample, such as perspiration or road salt. This is important because, for transformer oil, there is no sample cleanup procedures to remove inorganic chloride contamination. Once collected the sample is reacted and the resulting chloride is extracted and quantified.

The chlorine quantified in this case is the total chlorine contained in the sample. Transformer oil is typically free of inorganic chlorine eliminating the need for any sample cleanup procedure. In special cases where transformers have failed due to water contamination or have been removed for service and stored in areas near seawater or road salt, inorganic chloride may cause an elevated reading.

Before a soil sample can be analyzed, the organic contaminates must be extracted using an organic solvent. Because soil samples invariably contain inorganic chlorine, the soil extract is cleaned up to remove all traces of the inorganic chloride. The cleaned extract is then reacted and the resulting chloride is quantified. For soil analyses, therefore, only the organic chlorine content is ever quantified. Extraneous sources of chloride contamination such as road salt or sea salt are **not** detected.

As with soil samples, a water sample must also be extracted prior to final analysis. The ratio of the solvent volume to the sample volume determines the sensitivity of the test. The extract is reacted and the chloride is quantified as above. As with soil samples, only the organic chlorine is quantified in water samples.

Wipe tests require that a specific area be wiped using a hexane-soaked gauze. The gauze is extracted with an organic solvent, reacted, and the chlorine content determined. For wipe samples, the standard procedure eliminates most all inorganic chlorine contamination. Areas with very high surface concentration of salts may need to be prepared differently.

Chloride Conversion Reaction

Once the sample has been prepared, the remaining chloride conversion steps are the same for all sample types. The conversion step is a reaction of the sample with an excess of metallic sodium in the presence of a catalyst to convert the covalently bound organic chlorine into free chloride ions. This reaction of metallic sodium with organo-chlorine compounds is vigorous and goes to completion converting all of the organic chlorine to chloride.

Quantification

Upon the completion of the conversion reaction, the resulting chloride ions are extracted into an aqueous buffer. The chloride content in the final extract/buffer is then quantified using a chloride specific electrode and converted to an equivalent analyte concentration using the conversion factors programed into the

analysis method of the instrument. The conversion factor is made up of the percent chlorine, the sample size multiplier, and the extraction efficiency multiplier. The analyte concentration is determined by first subtracting the blank from the raw chloride reading (except when the Blank Subtraction has been turned off), and the resulting corrected chloride value is multiplied by the size and extraction multipliers and divided by the chloride fraction (percent chlorine divided by 100):

$$[\text{Analyte}] = ([Cl^-]_{raw} - [Cl^-]_{blank})(\text{size multiplier})(\text{extraction multiplier})/(\text{chlorine fraction})$$

The L2000DX analyzer comes preprogramed with 28 methods providing for analysis of a large number of chloride compounds in most matrices. Correction factors are preprogramed to account for all of the steps necessary to run samples using the standard prepackaged reagents. If the procedures are modified or other analytes are expected, up to 22 custom methods can easily be built.

The operational program of the L2000DX has been designed to provide the most versatile data reduction platform possible for the analysis of chlorinated organic compounds in a variety of matrices. At the same time, the program is easy to use for routine analysis and does not require custom method development. The operating program is divided into an **Analysis Loop** and the **OPTIONS Menu**. Preprogramed methods are available for use in routine analyses and are easily selected from within the **Analysis Loop**. The software automatically cycles back to critical points in the analysis loop to prompt the user for **"Calibration"**, **"Blank Subtraction"** and **"Sample ID"** inputs. Measurements can be initiated without requiring any additional programing by simply choosing the **Method** and following the on-screen instructions,. Custom methods can be constructed by selecting the **OPTIONS Menu** and modifying existing methods or creating a new method (see **Creating and Editing a Method**).

Unpacking

The L2000DX is shipped in its own carrying case, complete with all the hardware necessary for operation. Upon receiving the L2000DX Analyzer, please verify that all of the items listed below are present and in good working order.

The carrying case for the L2000DX Analyzer should contain the following items:

L2000DX Electronic PCB/Chloride Analyzer
Power cube AC-DC transformer
PC Upload Cable
Portable electronic balance & 100 gm Calibration weight
5 mL pipettor
Vial rack
Timer
Marking pen
Two empty 20 mL glass vials for RINSE and CALIBRATION solutions
L2000DX Data Manager Software CD
Instruction Manual, Certificate of Calibration and MSDS

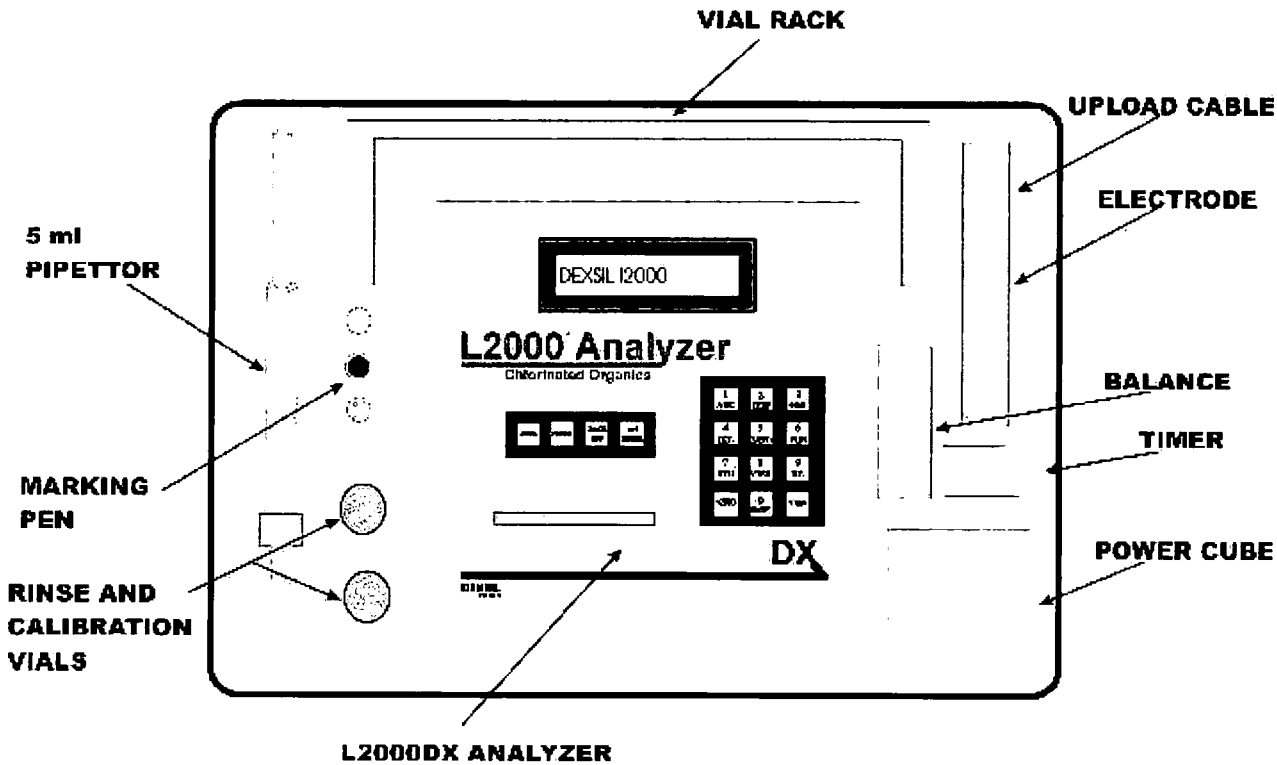

In addition to the aforementioned items in the carrying case, the following should be included in the same outer shipping box:

Chloride-ion specific electrode[1]
Packet of polishing strips[1]
Test tube rack

To prevent damage to the instrument in the case of a leak, the sample preparation reagents are shipped separately. The exact makeup of the reagent pack will depend on the specific reagent option chosen at the time of ordering. The options available for the L2000DX and the components contained in each are the following:

Option 1: Reagents for 40 Oil Tests

1 - 250 mL bottle of EXTRACT solution
1 - 250 mL bottle of RINSE solution
1 - 250 mL bottle of CALIBRATION solution
1 - 60 mL bottle of Electrode Filling Solution
1 - tray of 40 empty 20 mL glass vials
1 - box of tissue wipes
1 - **shelf-pack** containing (in a heat sealed foil bag):

[1] These items are shipped in their original packaging from Orion. Once they have been unpacked, they should be carried in the above-labeled slot in the carrying case.

40 - filters
40 - pipettes
40 - reaction tubes (black dispenser caps)

Reorder Part No: (LP-ORK)

Option 2: Reagents for 20 Soil Tests (Standard Procedure)

1 - 250 mL bottle of EXTRACT solution
1 - 250 mL bottle of RINSE solution
1 - 250 mL bottle of CALIBRATION solution
1 - 60 mL bottle of Electrode Filling Solution
1 - box of tissue wipes
1 - **40-cell box** containing:
    20 - empty 20 mL glass vials
    20 - bottles containing Soil Extraction Solvent
1 - **shelf-pack** containing (in a heat sealed foil bag):
    20 - filters
    20 - pipettes
    20 - reaction tubes (black dispenser caps)
    20 - metal scoops for obtaining soil samples
    20 - 10 mL plastic syringes
    20 - drying columns (foil packed)
    20 - empty test tubes with white caps

Reorder Part No: (LP-SRK)

Option 2a: Reagents for 20 Soil Tests (Two-Step Extraction Procedure)

1 - 250 mL bottle of EXTRACT solution
1 - 250 mL bottle of RINSE solution
1 - 250 mL bottle of CALIBRATION solution
1 - 60 mL bottle of Electrode Filling Solution
1 - box of tissue wipes
1 - set of instructions
1 - **40-cell box** containing:
    20 - empty 20 mL glass vials
    20 - 6 mL black-capped water vials
1 - **shelf-pack** containing (in a heat sealed foil bag):
    20 - empty 25 mL soil tubes
    20 - filter funnels
    20 - pipettes
    20 - reaction tubes with black dispenser caps
    20 - break-top vials containing Soil Extraction Solvent
    20 - metal scoops for obtaining soil samples
    20 - syringe filters (in a heat sealed foil bag)
1 - set of instructions

Reorder Part No: (LP-SR2)

Option 3: Reagents for 20 Water Tests

1 - 250 mL bottle of EXTRACT solution
1 - 250 mL bottle of RINSE solution
1 - 250 mL bottle of CALIBRATION solution
1 - 60 mL bottle of Electrode Filling Solution
1 - box of laboratory wipes
1 - **40-cell box** containing:
    20 - empty 20 mL glass vials
    20 - bottles of Isooctane
1 - **shelf-pack** containing (in a heat sealed foil bag):
    20 - filters
    20 - pipettes
    20 - reaction tubes (black dispenser caps)
    20 empty test tubes with white caps
1 - set of instructions

Reorder Part No: (LP-WTR)

Option 4: Reagents for 20 Wipe Tests

1 - 250 mL bottle of EXTRACT solution
1 - 250 mL bottle of RINSE solution
1 - 250 mL bottle of CALIBRATION solution
1 - 60 mL bottle of Electrode Filling Solution
1 - box of tissue wipes
2 - pair of safety goggles (1 pair/10 tests)
2 - pair of neoprene gloves (1 pair/10 tests)
1 - **shelf-pack** containing (in a heat sealed foil bag):
    20 - filters
    20 - pipettes
    20 - reaction tubes (black dispenser caps)
    20 - hexane ampules
    20 - empty test tubes with white dispensing caps
1 - **box** containing:
    20 - gauze pads in 20 mL glass vials
    20 - 10 mL glass bottles containing Extraction Solvent (isooctane)
1 - **box** containing:
    20 - empty 20 mL glass vials
    20 - forceps
1 - set of instructions

Reorder Part No: (LP-WIP)

NOTE: DO NOT STORE REAGENTS IN THE INSTRUMENT CARRYING CASE, AS ANY LEAKS WILL DAMAGE THE INSTRUMENT.

Initial Set Up

Once the L2000DX has been unpacked, the components checked and the contents of the reagent pack verified, the L2000DX can be set up for analysis. Locate the vial rack, the two empty 20 mL vials and the bottles of RINSE and CALIBRATION solutions. Remove the caps from both vials and label one 20 mL vial "RINSE" and the other "CAL". Fill each vial approximately ½ full with the appropriate solution and set in vial rack. (NOTE: It is helpful to label the rack with the location of the RINSE and CAL vials.) These solutions will be used for the initial setup and calibration of the electrode. They will also be used periodically to re-calibrate the electrode and check the electrode output. Once set up, the electrode should remain in the RINSE solution when not in use.

Prior to running the Analyzer on battery power, it should be charged overnight using the power cube supplied with the instrument. The Analyzer can be operated from line power while the battery is charging and should be left plugged in whenever AC power is available. Turn on the Analyzer by pressing and holding the <ENTER/ON> key until the printer advances one line and the display reads:

Dexsil L2000DX
Version X.XX

This screen is the **First Screen** in the operating program. The Analyzer is ready to accept instructions.

Restoring the Electrode After Extended Storage

The electrode is shipped empty and should be stored empty whenever it will be left for an extended period of time (see **Electrode Care and Maintenance**). To restore the electrode to operating condition:

1. Remove protective cap from the tip of the electrode.

2. Fill the electrode, up to the filling hole in the side, with the Orion Electrode Filling Solution supplied with each lot of reagents. To fill, place the nozzle of the fill solution bottle into the hole on the side of the plastic body and gently squeeze the fill bottle.

3. Drain the electrode, while holding it upright over the waste beaker, by grasping the body of the electrode firmly in one hand and pushing down on the black cap where the cord enters the electrode. The filling solution will drain out of the bottom of the electrode.

4. Refill the electrode and make sure that the fill solution is making contact between the black cone and the plastic shell at the bottom of the electrode. If it is not making contact at all points, drain the electrode again and refill.

5. Connect the electrode to the BNC connector labeled "ELECTRODE" on the back of the L2000DX Analyzer and check electrode output.

6. To check the electrode, turn the Analyzer on by pressing and holding the <ENTER/ON> key until the printer advances one line and the display screen activates. Select the **OPTIONS Menu** from the **First Screen** by the pressing <OPTION> key. At the **OPTIONS Menu**, go to ***"DIAGNOSTICS"*** by pressing the <6> key. This display:

DIAGNOSTICS X.X
XXX.X mV XX.X °C

will indicate the current temperature and then continuously update the electrode output in millivolts (mV). Place the electrode in fresh RINSE solution, gently swirl the solution with the electrode and allow to sit. The electrode output should reach 140 mV or greater within 1 minute. If the electrode output does not reach at least 140 mV, empty the RINSE solution and refill with fresh RINSE solution. If this does not improve the electrode output, drain the electrode, refill it with filling solution and check the output again. Once the output is greater than 140 mV, the electrode is functioning correctly and it is safe to proceed with measurements. If the electrode output does not reach 140 mV, see under **Trouble Shooting** for remedies. NOTE: The update rate for the ***"DIAGNOSTICS"*** display is 6 seconds, any keys pressed will not register until the end of the current measurement cycle.

Basic Operation of the L2000DX

General Information

The L2000DX meter is equipped with an internal gel cell battery and can be operated with or without the wall adaptor. A fully charged battery should be sufficient to operate for 3 full 8-hour days of sample analyses, printing each data point. To conserve battery power, the printer can be turned off and the stored data printed or uploaded at a later time. To preserve the battery, the unit should be plugged into an AC outlet whenever possible.

The operation of the L2000DX is controlled by a program organized into a series of "screens". A screen prompts the user for appropriate input or displays output from the processor. There are two screens at the beginning of the program that will be referred to throughout the text. They are, the **First Screen** which appears when the analyzer is turned on and is returned to when turning the meter off manually, and the **SELECT METHOD Screen** which is the next screen in sequence. From the **SELECT METHOD Screen** the desired analytical method is chosen prior to analysis. From this screen the program enters a series of screens that step the user through the analysis of prepared samples. This series includes the calibration steps and blank determination and will loop back for periodic re-calibration as necessary. This section of the program is referred to the **Analysis Loop**. (See below for a block diagram of the program..)

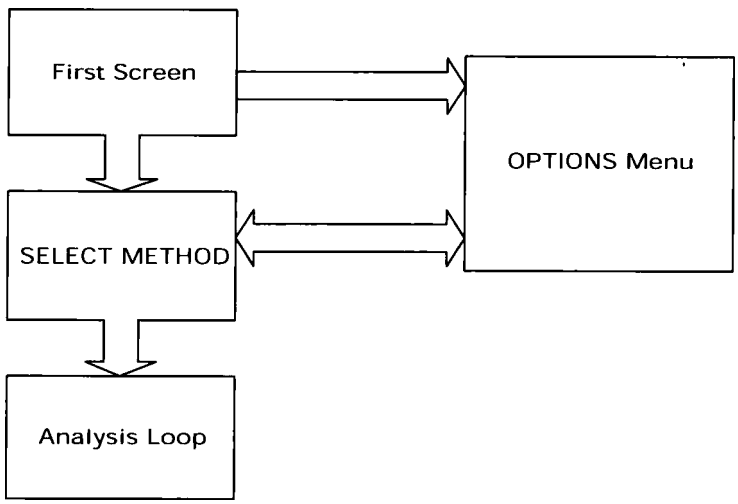

Once in the **Analysis Loop**, the analyzer must be calibrated. The calibration procedure is a single point calibration using a 50 ppm chloride CALIBRATION standard supplied with each batch of reagents. This calibration must be repeated approximately every 20 measurements or one hour, whichever comes first. A timer, a counter, and a thermistor have been built into the instrument to prompt the user for recalibration when necessary. During the calibration procedure, the function of the electrode will also be evaluated. If the electrode potential for the calibration solution is not within the acceptable limits, a warning will be displayed and the program will jump to the diagnostics mode. (See below under ***DIAGNOSTICS*** .)

All other functions of the program are accessed by pressing the <OPTION> key from the **First Screen** or the **SELECT METHOD Screen**. This section of the program is referred to in the manual as the **OPTIONS Menu**. Although only one choice can be displayed at a time, options are organized into a sequence of choices, functioning much the same as a menu typical of most computer programs.

Turning the Analyzer On and Navigating the Operating Program

Pressing and holding the <ENTER/ON> key until the printer advances one line and the display activates will turn the Analyzer on and the program will be in the **First Screen**. In the **First Screen** the display will read:

Dexsil L2000DX
Version X.XX

indicating the current software version running on the L2000DX. The version number should match the version number indicated on the cover of this manual.

From the **First Screen** pressing the <ENTER/ON> key will move the program to the **SELECT METHOD Screen**. In the **SELECT METHOD Screen:**

SELECT METHOD
method id

pressing the <<NO> and <YES>> keys will scroll through the stored methods. When the desired method is displayed, pressing the <ENTER/ON> key will select it. The program will then enter the **Analysis Loop** and the program will begin prompting one through the operations necessary to begin the analysis of samples using the chosen method.

Calibration

The first step required before any measurements can be made is to calibrate the instrument.
The L2000DX operating program will jump to the **CALIBRATION** screen when a new method is selected, when the temperature has changed by more than 5°C, or when the recalibration timer is triggered. The display will read:

CALIBRATION FOR
method name

indicating the method that is currently selected. Press the <ENTER/ON> or <YES>> keys and the display will indicate that the electrode should be placed in clean fresh CALIBRATION solution:

IS CALIBRATION

SOLUTION READY

Remove the electrode from the RINSE solution, gently wipe the body of the electrode with a clean wipe and insert the tip into the CALIBRATION solution. NOTE: DO NOT WIPE THE TIP OF THE ELECTRODE AS THIS MAY DAMAGE IT. Swirl the electrode gently a few times and press the <ENTER/ON> or <YES>> key. Allow the electrode to remain in the calibration solution, the meter will briefly display the message:

MEASUREMENT IN
PROGRESS

Provided the electrode output is within the acceptable range and the ambient temperature is also within the acceptable range, the calibration procedure is complete when the program display briefly:

CAL TEMP = XX °C
mv = xx

The calibration results will also be sent to the printer, if the printer has been turned on.

CALIBRATION:	*hh:mm mm/dd/yyyy*
VERSION:	*xxxx*
METHOD:	*METHOD NAME*
MV = *xx.x*	TEMP. = *xx.x* °C
A = *xxx.x*	B = *xx.xxx*
OFFSET = *x.x*	

The program function will then move to the next step in the chosen method. If the temperature is outside the acceptable range the following error message will be displayed:

Temperature
Error xx.x °C

A temperature error indicates that the ambient conditions are not suitable for measurement. Save all extracts and move to a location where the temperature is within the acceptable range.

If the electrode output is outside the acceptable range, an error will be displayed:

CAL ERROR
mV = xx

Pressing the <ENTER/ON> key will move the program back to the beginning of the **Analysis Loop**. (See "CAL ERROR" in **Error Messages** under **Trouble Shooting**)

Blank Determination

All of the pre-programed methods have the option of subtracting a reagent blank built into the method. If blank subtraction has been enabled in the chosen method, this option will be presented after each calibration. The option will be presented as:

USE BLANK
YES/NO

If NO is chosen, the program moves on to the next step in the method as described below in **Analysis.** If YES is chosen, the option will be presented:

USE PREVIOUS
BLANK YES/NO

If YES is chosen, an opportunity will be presented to change the stored blank or to enter a fixed value at:

USING BLANK OF
0.00

This number, in ppm chloride, can be edited or accepted, as is, by pressing the <ENTER/ON> key. The program then continues to the next step as described below under **Analysis**.

If NO is chosen, the screen will prompt for the blank solution:

PUT PROBE INTO
BLANK <ENTER>

The blank solution must be prepared as a sample would be, using all of the sample preparation steps and reagents but without an actual sample.[2] After reaction the blank must be allowed to reach room temperature as described below. Insert the electrode into the solution, swirl gently for a few seconds and allow to sit. With the electrode in the solution, press the <ENTER/ON> or <YES>> key. After the measurement has been made, the blank result will be displayed as:

BLANK READING
01.2

After pressing the <ENTER/ON> key, the program will continue to the next step in the analysis as

---

[2] When preparing a blank using the Standard Soil Extraction Solvent, DO NOT add any of the water from the bottom of the solvent vial.

described below. A measured blank cannot be edited. Only stored blank values can be edited.

Analysis

Prepare samples for analysis as described under **Sample Preparation**. Once the samples have been prepared, choose the appropriate analysis method and calibrate the meter. The program will display instructions as determined by the chosen method.

1. Make sure that the method has been selected, the instrument has been recently calibrated (including any blank determinations) and that the analysis solutions have been allowed to temperature equilibrate for at least 5 minutes. The display should read:

   ANALYZE SAMPLE
   method name

   Press the <ENTER/ON> key to continue to the screen:

   SAMPLE ID (save)
   sample id

   If the sample ID is correct, proceed to the next step. Otherwise change the ID as described under **Entering Data**. The indication "save" will appear in this screen if the option to save data points as they are taken has been selected (See **Data Management**).

2. Remove the electrode from the rinse solution and wipe the body carefully with a tissue. NOTE: DO NOT WIPE THE TIP OF THE ELECTRODE AS THIS MAY DAMAGE IT. Place the electrode in the vial to be analyzed and swirl it gently for several seconds.

3. Press the <ENTER/ON> key. The L2000DX will take a series of readings. Once the readings have converged on a constant value, the result will be displayed along with crucial method information. A beeper will sound to indicate that the new value is ready.

4. To analyze additional samples, press the <ENTER/ON> key. The program will check the ambient temperature and, if it is still within the allowable range, the program will cycle back to begin the next analysis. Proceed as in step 1 above to make the next measurement.

5. Samples may be saved for analysis at a later time, but the vials should be tightly capped. Once they have been read, samples should be discarded. Do **not** re-analyze samples.

6. Pipettes and oil should be disposed of as PCB/Organo-chlorine waste. Analysis solution can be disposed of as ordinary aqueous waste containing nickel.

Entering Data

All user input to the L2000DX Analyzer is through the 16 key keypad on the front panel. There are 12 alpha-numeric keys and 4 function keys. Audible feedback is provided, on all keys, to indicate that a key press has been registered by the processor. Data is entered using the alpha-numeric keys. These keys are active only when an input is required and will be acted on only when they are appropriate for the active screen.

When numeric input is required, only the numbers indicated on the keys will be registered. To change an entered number, use the arrow keys to move the cursor to the desired location and press the correct number key. To input letters in a text string, such as in a method name or sample ID, both an alpha-numeric key and the ALPHA key must be pressed. When an alpha-numeric key is pressed, the number associated with that key will be displayed first. The ALPHA key is then pressed once, twice, or three times to change the character to the desired letter. Continued ALPHA key presses will "scroll" the characters through the letters and the number shown on the face of the key. For example: Pressing the <7> key will first cause the "7" to be displayed. The cursor will move to the next space and, if the ALPHA key is pressed next, the "7" changes first to an "S", then a "T", followed by a "U". (Pressing the< ALPHA> key again will cycle the character back to the "7".) Once the desired character is displayed, pressing an alpha-numeric key will enter the next character, above the cursor.

Having a sample ID that includes a number automatically incrementing with each successive sample, will make assigning a unique sample ID much easier. This is accomplished by using "wildcards" in the sample ID. There are two "wildcard" characters that can be used. These are the "*" and the "?". They function much the same as their DOS equivalents. Entering an "*" in a sample ID will add an automatically sequencing number to the sample ID. The number begins at 00001 and increments up to 99999. (If less than 5 spaces are left in the sample ID then the number is limited to the number of digits left.) The "?" has the same function as the "*" but the appended number will only have the number of digits as question marks entered. NOTE: Editing a sample ID with a "wildcard" will freeze the number at the current value and eliminate the wildcard function.

Special Keys

The <NO and YES> keys function as either a yes/no response or as arrow keys to move the cursor through a text entry.

The four special function keys, ALPHA, OPTION, BACK/OFF and ENTER/ON are used to direct the operation of the program. The ALPHA key is used to input letters in a text string. The OPTION key, from the first or second screen, will transfer program operation to the **OPTIONS Menu**. From the **RESULT Screen** in the **Analysis Loop**, the OPTION key is used to view the chosen parameters of the currently active "Method". The BACK/OFF key is used to exit from any section of the program, back through successive screens to the **First Screen** and, ultimately, to turn the meter off. The ENTER/ON key will turn the instrument on and is used to enter any options chosen or to step forward in the program.

Electrode Check

The electrode is the most important component in the system. It is, therefore, important that the electrode be properly maintained and the initial setup will determine how well the electrode is functioning. Before turning the L2000DX analyzer on, insure that the electrode is properly connected to the back of the unit. Check the fill level in the electrode and, if necessary, refill the electrode with the Orion filling solution supplied with each lot of reagents. To fill the electrode, insert the tip of the filling spout of the filling solution bottle into the hole on the side of the electrode. Slowly squeeze the solution into the electrode body until it reaches the level of the hole.

Once the electrode has been filled, check the electrode output by going to "***Diagnostics***" from the **OPTIONS Menu.** Rinse and refill the RINSE vial with fresh rinse solution and swirl the electrode in the solution gently for a few seconds. Allowing the electrode to sit in the rinse solution, verify that the mV reading is greater than 140 mV. If the output does not reach at least 140 mV within a minute, refill the RINSE vial with fresh solution and recheck the output. If this does not improve the output, refill the electrode with fresh fill solution. (See **Electrode Care and Maintenance**).

Sample Preparation

Oil Samples

Before a transformer oil sample can be analyzed with the L2000DX, the PCB/Chlorinated Organics must be chemically converted to chloride.

1. Remove the cap from a black-capped tube and add oil up to the 5 mL line using a polyethylene pipettor (See Figure 2). Replace the cap tightly on the tube.

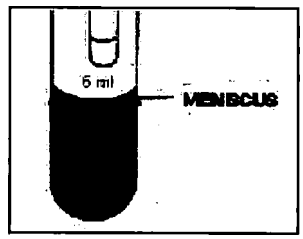

Figure 2

2. Break the bottom (colorless) ampule in the tube. Shake the tube well for 10 seconds.

3. Break the top (gray) ampule in the tube. Shake the tube vigorously for 10 seconds Allow the reaction to proceed for additional 50 seconds (total of one minute), while shaking intermittently several times.

4. Using the 5 mL pipette, add five milliliters of extract solution to the back-capped tube. Tighten the cap securely and shake vigorously until the foam and dark color disappear. Vent the tube by partially unscrewing the black cap while holding the tube upright. Squeeze the test tube slightly while re-tightening the cap, and shake the tube vigorously for 20 seconds more. Vent again, tighten cap and stand the tube upside-down on the flat top of the cap and allow to settle for two minutes.

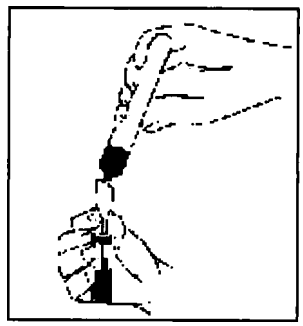
Figure 3

5. Place a polyethylene filter funnel in one of the 20 mL glass vials marked with the sample number. Position the black-capped test tube directly over the top of the funnel and open the dispenser nozzle (See Figure 3). Dispense the solution by carefully squeezing the sides of the tube. Stop as soon as the first drop of oil appears. Allow the solution to pass through the funnel, but remove the funnel before any oil can get through. Allow the solution to cool for five minutes. The sample is now ready for analysis.

Soil Samples

To analyze a soil sample for PCB/Chlorinated Organics, the analyte must first be extracted from the sample. There are two solvent extraction systems available. Depending on the specific application, either the standard extraction solvent or the two-step procedure will be most appropriate. Both systems provide good, reproducible recoveries on dry sandy loam type soils. The standard procedure is somewhat faster and has fewer steps, but should not be used on wet or heavy clay soils. Regardless of the solvent system used, it is important that split samples be periodically analyzed by a reputable laboratory, not only to identify/confirm the Aroclor present, but also to confirm the extraction efficiency of the L2000DX solvent system. Contact Dexsil before trying to analyze other types of materials. NOTE: The quality of the final result is directly determined by sampling technique. It is, therefore, important to use proper protocols for sample collection and homogenization.

Standard Procedure for Soil Analysis

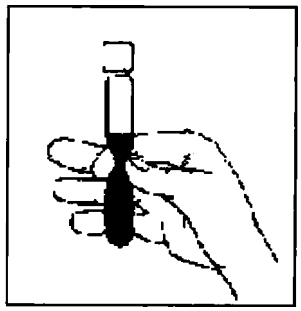

Figure 4

1. Using the metal spatula and the portable electronic balance supplied with the kit, weigh out ten grams of the soil into the empty, white-capped test tube. NOTE: Be careful not to get any foreign material into the weighed sample, i.e., absorbent material, large rocks, etc. The empty tube can be tared by placing it on the balance and pressing the <ON/OFF/ZERO> key.

2. Remove the black cap from the glass vial containing the extraction solvent and pour the entire contents of the vial into the tube containing the soil. Replace the white cap on the plastic test tube tightly and shake the tube vigorously for one minute. Break up any lumps of soil by squeezing the sides of the test tube during the shaking process (See Figure 4). Allow the tube to settle upright for two minutes.

3. Remove the drying column from its foil pouch by poking the pointed end of the column through the foil and remove the red end-cap. Pull the plunger completely out of the 10cc syringe. Attach the end of the blue drying column to the tip of the syringe by sliding it over the collar on the tip of the syringe. This is a tight fit and the drying column may have to be carefully worked onto the syringe. Make sure that it is seated tightly.

4. Remove the black dispensing cap from the plastic test tube that contains two glass ampules. Slide the syringe-drying column assembly part of the way into the test tube which contains the two ampules. Stand the whole assembly upright. Using the polyethylene pipette, remove the extraction solvent from on top of the soil and dispense it into the top of the open syringe barrel. You will need to recover enough extraction solvent to fill the syringe barrel to the 7 mL level. Try not to remove any soil with the solvent as this may clog up the drying column. After 7 mL of solvent has been dispensed into the syringe, replace the plunger into the back of the syringe and apply pressure so that the solvent is forced through the drying column at the rate of 2 or 3 drops per second. (NOTE: Do not force the solvent through the drying column too fast.) When the dried solvent fills the test tube to the 5 mL line, pull back on the plunger to stop the flow of solvent. Remove the syringe-drying column assembly from the test tube, and screw the black dispensing cap tightly onto the test tube.

5. Break the bottom (colorless) ampule in the test tube by squeezing the sides of the tube and shake the mixture well for 10 seconds. Break the top (gray) ampule in the test tube and shake the tube vigorously for 10 seconds. Allow the reaction to proceed for additional 50 seconds (total of one minute), while shaking intermittently several times.

6. Using the 5 mL pipettor, add five milliliters of extract solution to the back-capped tube. Tighten the cap securely and shake vigorously until the foam and dark color disappear. Vent the tube by partially unscrewing the black cap while holding the tube upright. Squeeze the test tube slightly while re-tightening the cap, and shake the tube vigorously for 20 seconds more. Vent again, tighten cap and stand the tube upside-down on the flat top of the cap and allow to settle for two minutes.

7. Place a polyethylene filter funnel in one of the 20 mL glass vials marked with the sample number. Position the black-capped test tube directly over the top of the funnel and open the dispenser nozzle. (See Figure 3) Dispense the solution by carefully squeezing the sides of the tube. Stop as soon as the first drop of the organic solvent appears. Allow the solution to pass through the funnel, but remove the funnel before any oil can get through. Allow the solution to cool for five minutes. The sample is now ready for analysis.

Two-Step Procedure for Soil Analysis:

1. Using the metal spatula and the portable electronic balance supplied with the kit, weigh out ten grams of the soil into the empty, white-capped test tube. NOTE: Be careful not to get any foreign material into the weighed sample, i.e. absorbent material, large rocks, etc. The empty tube can be tared by placing it on the balance and pressing the <ON/OFF/ZERO> key.

2. Add the contents of one break-top glass solvent vial to the test tube of soil sample. Replace the cap tightly on the tube and shake contents for 3 minutes making sure the entire soil sample is thoroughly wetted.

3. Add the colored water component contained in the 6 ml black-capped vial to the test tube. Recap tightly and shake for an additional 2 minutes.

4. Allow the mixture to separate for 2 minutes.

5. Remove the plunger from a syringe/filter unit in the foil package and remove the black-dispensing cap from the reaction test tube and stand it in the rack.

6. Remove the top layer from the soil test tube (solvent layer) using the polypropylene pipette provided and while holding the syringe/filter over the reaction tube, add 7 ml to the syringe/filter.

7. Add solvent from the syringe/filter up to the 5 ml line of the black-capped test tube. Replace the cap tightly on the tube.

8. Break the bottom (colorless) ampule in the black-capped test tube by squeezing the sides of the tube and shake the mixture for 10 seconds.

9. Break the top (gray) ampule in the test tube and shake the tube vigorously for 10 seconds. Allow the reaction to proceed for an additional 40 seconds (total of one minute), while shaking intermittently several times.

10. Using the 5 milliliter pipettor from the basic L2000 system, add 5 ml of the L2000 Extraction solution to the black-capped tube. Tighten the cap securely and shake the tube vigorously until the foam and dark color disappears. Vent the tube by partially unscrewing the cap while holding the tube upright. Squeeze the test tube slightly while retightening the cap and shake a second time. Vent again, retighten cap and stand the tube upside-down on the flat top of the cap and allow to settle for two minutes.

11. Place a filter funnel in one of the 20 ml glass vials marked with a sample number. Position the black-capped test tube directly over the top of the funnel and open the dispenser nozzle. Dispense the solution by carefully squeezing the sides of the tube. Allow the solution to pass thorough the funnel, but remove the funnel before any oil can get through. Allow the filtered solution to cool for five minutes. The sample is now ready for analysis with the L2000 Analyzer.

Water Samples

High Range (5-2000 ppm)

1. Fill sample tube with 10 grams of water sample.

2. Add 10 mL of isooctane extraction solvent and shake vigorously for 30 seconds.

3. Allow to separate into two phases for a minimum of 2 minutes. (If a emulsion forms, add sodium sulfate*, shake and allow to separate again). Using the disposable plastic pipette remove 5 mL of the top solvent layer and add to the black capped reaction tube.
(*available from major chemical suppliers).

4. Proceed with test as for an oil sample and quantify using the appropriate LX2000DX method.

Low Range (20 ppb - 5 ppm)

1. Collect sample in 1 quart narrow mouth glass bottle with zero head space. Cap tightly and store on ice until analysis.

2. When ready to analyze the sample, invert sample container gently once or twice and, using a plastic pipette, remove 35 mL of water from the sample jar by weighing 35 grams of water into a tared waste container and discard. Then add 10 mL of isooctane to sample container and shake vigorously for 2 minutes.

3. Add sufficient chlorine free distilled water to bring the water level up into the neck of the sample bottle (the solvent level should be just shy of the top of the neck) and allow to set for 3 minutes.

4. Withdraw 5 mL of the upper solvent layer (**Do Not Remove Any Water With the Solvent**), add to the black capped reaction tube and cap tube tightly.

5. Proceed with the analysis as for an oil sample and quantify using the appropriate L2000DX method.

Wipe Samples

1. Locate the sealed glass vials containing chromatographic grade hexane and carefully break off the tip. Pour the entire contents into the vial containing the gauze pad. Grasp the soaked gauze pad with the disposable forceps and using an approved technique, wipe an area of 1000 cm^2.

1000 cm^2 is equivalent to a square measuring 31.6 cm or 12.5 inches on each side. It is equal to 1.08 ft^2. Allow the hexane to evaporate from the wiping material (approximately 1 minute).

2. Being careful not to contaminate the wipe, place it as loosely as possible into the tube with the white dispenser cap. Pour the extraction fluid, (10 mL of isooctane), into the white-capped tube. Tighten the cap and solvate the gauze thoroughly for 30 seconds. Squeeze the tube to make sure that the isooctane completely washes the gauze. This solvent now contains all the PCBs that were removed during the wiping procedure.

3. Remove the black dispenser cap from one of the reaction tubes. Open the spout on the white dispenser-capped test tube and dispense the isooctane extract into the black-capped tube up to the 5 mL line. Replace the cap tightly on the tube.

4. Break the bottom (colorless) ampule in the tube. Shake the tube well for 10 seconds.

5. Break the top (gray) ampule in the tube. Shake the tube vigorously for 10 seconds Allow the reaction to proceed for additional 50 seconds (total of one minute), while shaking intermittently several times.

6. Using the 5 mL pipette, add five milliliters of extract solution to the back-capped tube. Tighten the cap securely and shake vigorously until the foam and dark color disappear. Vent the tube by partially unscrewing the black cap while holding the tube upright. Squeeze the test tube slightly while re-tightening the cap, and shake the tube vigorously for 20 seconds more. Vent again, tighten cap and stand the tube upside-down on the flat top of the cap and allow to settle for two minutes.

7. Place a polyethylene filter funnel in one of the 20 mL glass vials marked with the sample number. Position the black-capped test tube directly over the top of the funnel and open the dispenser nozzle (See Figure 3). Dispense the solution by carefully squeezing the sides of the tube. Stop as soon as the first drop of oil appears. Allow the solution to pass through the funnel, but remove the funnel before any oil can get through. Allow the solution to cool for five minutes. The sample is now ready for analysis.

The OPTIONS Menu

Except for the **Analysis Loop**, all program functions of the L2000DX are accessed through the **OPTIONS Menu**. The options available are:

1) METHOD - CREATE/EDIT
2) HEADER INFORMATION
3) DATA MANAGEMENT
4) PRINTER OPTIONS
5) TIME AND DATE
6) DIAGNOSTICS
7) PC UPLOAD
8) SET TEMP

The **OPTIONS Menu** is entered by pressing the <OPTION> key at the **First Screen** or the **SELECT METHOD Screen**. Once in the **OPTIONS Menu**, each option will be displayed for 3 seconds and they will continually loop for 3 minutes or until an option is chosen. An option is chosen by pressing the appropriate number for the desired option.

I.) Creating and Editing a Method

The key to the utility of the L2000DX analyzer is the versatility of the methods that can be developed for the instrument. A "method" is the complete set of parameters that are necessary to convert a chloride reading into an accurate quantification of the targeted analyte. Preprogramed in the meter are a number of methods for the analysis of many common environmental contaminants. These methods can be modified and custom methods can be built by setting any of the conversion parameters used to convert the chloride reading into an equivalent analyte concentration.

Each method requires 8 parameters to be set. These parameters are determined by the composition of the sample and the chemistry of the sample preparation and/or extraction procedures used to introduce the sample into the system. They can be either calculated from known parameters or determined empirically from preliminary experiments. The parameters common to all methods and their allowable ranges are tabulated below.

Parameter	Range of Values
Blank Subtraction	yes/no
Chlorine Content	10 - 99.9
Sample Size Correction	0.01 - 99.9
Extraction Efficiency Correction	0.01 - 99.9
Matrix	Oil, Soil, Water, Wipe
Units to be Displayed	ppm, mg/kg/ ppb, ug/sdm
Analyte Label	16 character alpha-numeric
Method Name	16 character alpha-numeric

To create a new method or edit an existing method choose 1) "***METHOD CREATE/EDIT***" from the **OPTIONS Menu**. Then choose either 1) "***EDIT METHOD***" to edit an existing method or 2) "***CREATE NEW***" to create an entirely new method. Choosing 2) "***CREATE NEW***" will begin the parameter selection for the new method directly. If 1) "***EDIT METHOD***" is chosen, the next screen will be:

CHOOSE METHOD : x
method names

to choose the method to edit. The existing method names can be viewed by pressing the << NO> key to scroll backward or <YES> > key to scroll forward. Once the desired method is displayed pressing the <ENTER/ON> key will select the method and the choice will be given to either:

1) MODIFY METHOD
2) DELETE METHOD

Choosing 2) "***DELETE METHOD***" will delete the chosen method. This is the only way to delete unwanted methods. (NOTE: Preprogramed methods cannot be deleted. Only user created methods can be deleted.) Choosing `1) MODIFY METHOD@` will begin the method parameter editing. After this screen, whether editing or creating a method, the steps are the same.

Blank Subtraction

The first parameter that will be displayed will be:

BLANK SUBTRACT
YES OR NO

Enabling blank subtraction allows for the subtraction of a reagent blank, if any, from the raw chloride

measurement before the final result is displayed. When blank subtract is on, the analyst will be prompted to either measure a blank, use a previous blank or input a blank value to be used. During the analysis of unknowns, if a blank is subtracted, the results will be displayed with a "B" in the upper right corner of the display.

Chlorine Content

The next parameter that can be input is the chlorine content of the target analyte.

% CHLORINE XX.X
99.9%

Input as a percentage, this parameter is used to convert the total chloride reading into an equivalent analyte concentration prior to the display of the result.

Size Correction

The size correction is used to adjust the results for the sample size used for a particular analysis. The assumed sample size is 5 grams of a liquid sample, 10 grams for a soil sample and 1000 cm^2 for wipe samples. The correction would be calculated from the ratio of the expected sample size to the actual sample size. For example, if a 5 gram sample is used for soil analysis, the correction would be 10/5 or 2. NOTE: In the analysis of transformer oil, the sample is typically taken volumetrically, therefore, a correction for the density of the oil is incorporated into all pre-programed Oil Methods. The density of a typical dielectric fluid used in transformers, Diala-A, is 0.8833 g/cc. The size multiplier, built into each Oil Method, is then 1/0.8833 = 1.13. This allows the results to be displayed as ppm or mg/kg. The size correction screen is:

SIZE MULTIPLIER
1.13

Extraction Efficiency Correction

Because there are one or more extractions involved in the preparation of samples for measurement, a correction for extraction efficiency has been provided for in the method parameters in the screen:

EXTRACTION MULT
1.11

The correction is entered as a multiplier applied to the final result. For example the recovery of chloride ions from the organic phase in the final extraction of oil samples is 90%. For oil samples, this is the only extraction step, therefore, the correction multiplier would then be 1/0.90 or 1.11. The typical extraction efficiency for the recovery of organics from soil samples is 80%. Combined with a chloride recovery of 90% the overall extraction correction is (1/(0.80 x 0.90)) or 1.39.

Matrix

The matrix label for sample type appears in the header information and indicates what type of sample was analyzed. The available labels are:

1)OIL 2)SOIL
3)WATER 4)WIPE

To choose the matrix label enter the number of the matrix option and press the <ENTER/ON key. NOTE: This is a label only. Choosing a matrix does not set any of the numeric conversion factors. They must be set separately.

Units

The units variable in a particular method development is simply the text that appears associated with the displayed, printed or stored result. To choose a label, press the number for the desired units. The available labels are:

1)PPM 2)MG/KG
3)PPB 4)ug/sdm

Any of the units can be combined with any of the matrices chosen, however, ug/sdm is only meaningful for wipe samples. The units "ug/sdm" is shorthand notation for **m**icro**g**rams per **s**quare **d**eci**m**eter which is equivalent to micrograms per 100 square centimeters, i.e., ug/sdm = ug/100scm.

Analyte Label

The analyte label is a 16 character label that will appear on the display indicating the analyte equivalent concentration, assuming that all organic chlorine detected in the sample were that analyte. The entry screen appears as:

ANALYTE LABEL
analyte label

This label can be left blank, however, something should be entered as this is the only way to identify the expected analyte when the final analytical result is displayed.

Method Name

After all of the method variables have been selected, the user will be prompted for the name under which the method will be stored in memory:

METHOD NAME
method name

There must be a unique name associated with each method. A method name consisting of all blanks is not allowed for this option. If an existing method name is entered, the prompt:

EXISTING METHOD
OVERWRITE IT?

will appear. Choosing YES will cause the new method to over write the existing one. (NOTE: Pre-programed methods cannot be over-written. If they are modified, they must be stored as a new method.) Choosing NO will loop the program back to the **METHOD NAME** screen for a new file name. Once a valid method name has been selected, program operation will return to the **OPTIONS Menu.**

2.) Header Information

Associated with each block of data are descriptors that will identify all of the important information needed to use the collected data at a later date. Along with the method information, date and time, etc., are header fields available for user selected information. Each of these fields is 16 characters long and the information is entered from the key pad as described under **Entering Data**. The available fields are:

Operator ID
Customer ID
Job ID
Location ID
Comments

If any of these parameters are changed a new header will be stored in memory, to be linked with the data, as well as printed on the printout, if the printer is enabled. The individual fields are edited through each of the individual screens. Text is entered as described under **Data Entry**.

When printed, the header information will appear as follows:

Time (hh:mm) **Date** (mm/dd/yyyy) **Operator ID**
Customer ID **Job ID**
Location **Comments**
Method Name **Matrix**

BLANK SUBTRACT: (yes/no, If yes: value)

Analyte Label
CHLORIDE **ANALYTE**
SAMPLE ID **READING** **CONCENTRATION**

Pressing the <2> key, while in the **OPTION Menu**, will begin the editing of header information at the screen:

HEADER SETUP
<BACK> TO RETURN

Pressing the <ENTER/ON> key will continue to the next screen:

OPERATOR ID
XXXXXXXXXXXXXXX

After editing the text, pressing the <ENTER/ON> key will allow editing of the next header field:

CUSTOMER ID
XXXXXXXXXXXXXXX

After editing the text, pressing the <ENTER/ON> key will allow editing of the next header field:

JOB ID
XXXXXXXXXXXXXXX

After editing the text, pressing the <ENTER/ON> key will allow editing of the next header field:

LOCATION ID
XXXXXXXXXXXXXXX

After editing the text, pressing the <ENTER/ON key will allow editing of the next header field:

COMMENTS
XXXXXXXXXXXXXXX

After editing COMMENTS, pressing the <ENTER/ON> key will loop the program back to the first **HEADER SETUP** screen. Pressing the <BACK/OFF> key will exit to the **OPTION Menu** or pressing the <ENTER/ON> key will begin the editing process again.

3.) DATA MANAGEMENT

A number of data management options are available to the user. They can be selected from the **DATA MANAGEMENT Menu**. Data management options are selected independent of the method chosen and remain in effect until changed by selecting a new option. Enter the **DATA MANAGEMENT Menu** by pressing the <3> key from the **OPTION Menu**. The first option is:

STORE EACH
POINT (Y/N)?

Activating this option by pressing the <YES>> key will cause each data point to be stored in memory as it is taken. Data points are stored along with all of the method and header information associated with them. The default for data storage is to store each data point. All data points will be stored automatically unless this option is changed. Pressing the <<NO> key will deactivate this option and no further data will be stored unless this option is activated again.

Once the data storage option has been chosen the next screen is:

CLEAR DATA
MEMORY (Y/N)?

This option should be used periodically to clear out old or unwanted data. Choosing this option erases all stored data and header information and reformats the data storage space. The current header information and the current method are not altered. After choosing this option, confirmation will be required before the data will actually be erased:

ALL DATA WILL BE
LOST. PROCEED?

Pressing the <YES>> or <<NO> key will complete this option as desired and exit back to the **OPTION Menu**.

4.) PRINTER OPTIONS

The default option for the printer is to print all data points as they are collected. Anytime the header information is edited, a new header is printed. Anytime an external printer is connected to the printer port on the back of the unit, all printouts will be directed to the external printer.

The first option under **4) PRINTER OPTIONS** is:

PRINT POINTS
WHEN TAKEN (Y/N)?

Pressing the <YES>> key will cause each data point to be printed as it is taken. (This option refers only to the printing of data in the **Analysis Loop**. Printing stored data points is the next option.) This option can be turned off to save battery power in the field. It will also be turned off automatically if a low power condition exists. Turning off the print option by pressing the <<NO> key will result in no data printout when the data is taken in the **Analysis Loop**. To obtain a hard copy of the data, the data can be printed at a later time.

To print data after it has been stored, press the <YES>> key from the screen:

PRINT LAST XXXX
POINTS

Choosing this option will cause the last xxxx data points to be printed on either the internal or an external printer. The default is all of the stored data. This number can be edited using the numeric key pad.

To print the current header information, press the <YES>> key from the screen:

PRINT HEADER NOW
(Y/N)?

This option will print all of the header information on the current printer.

The last print option is to print out a hard copy of the method parameters. At the screen:

PRINT METHOD NOW
(Y/N)

Press the <YES>> key to print the method.

5) DATE AND TIME

To change the date and/or the time, choose this option and enter the correct information in the indicated fields. The first option to change is:

TIME XX:XX
hh:mm <ENTER>

Enter the time using the 24 hour clock: hours then minutes. The last entry will cause the current time to be briefly displayed and then the screen:

DATE mm/dd/yyyy
mm/dd/yyyy <ENTER>

Enter the date as a 2-digit month and day followed by 4-digit year.

6.) DIAGNOSTICS

This option should be used to periodically check the output of the electrode, such as at the beginning of each day or if the electrode has been stored for an extended period of time. Or, if an electrode error occurs, this option will allow the user to verify the fault and take corrective action. Once this option has been chosen, the L2000DX will begin measuring the mV output of the electrode and display the results along with the ambient temperature.

DIAGNOSTICS x.xx
xx.x mV xx °C

7.) UP LOAD

Chose this option to upload stored data to a PC. The L2000DX Data Manager must be loaded an running on the target PC. (See **L2000DX Data Manager**.)

To upload data, first connect the L2000DX Analyzer to the PC using the upload cable provided. Once connected, select the **7) PC UPLOAD** option by pressing the <7> key from the **OPTION Menu**. The display will change to:

BEGIN UPLOAD
<BACK> TO STOP

Then, from the PC, choose BEGIN UPLOAD to begin the upload.

8.) SET TEMP

This option allows for the field adjustment of the internal thermistor. When adjusting the L2000DX thermistor, the resulting temperature measurements are only as accurate as the thermometer used for adjustment.

To adjust the internal thermistor, choose **8) SET TEMP** by pressing the <8> key from the **OPTIONS Menu**. The L2000DX will check the current temperature and display the raw result on the screen:

INPUT TEMP IN °C
XX.X °C (RAW)

enter the current temperature followed by pressing the <ENTER/ON> key. The adjusted temperature will be displayed with the message:

NEW TEMP TO USE
XX.X °C OK(Y/N)?

NOTE: An adjustment of ±5°C max. is allowed. If the input temperature differs by more than this, the temperature will be fixed at the max/min allowed.

L2000DX Data Manager

Introduction

The L2000DX Data Manager is a PC based data base program specifically designed for data from the L2000DX Analyzer. It provides four basic capabilities: uploading stored data, report generation, data export functions and basic data base functions for tracking data from one or more L2000DX Analyzers.

Installation

To install the Data Manager: Insert program CD into CD drive and run setup.exe. The install program will provide guidance for all installation steps.

Uploading data

Each time you upload data from a particular L2000DX unit, the software reads from the unit the date it was last cleared and stores this date for future reference. It also stores the number of the last record uploaded. The next time you upload data from the same unit, the software compares the date it reads from the unit with the stored date. If they are the same, it continues uploading data from the last uploaded record, eliminating any duplication in your data set. If the dates are different, the software assumes you have cleared the unit since your last upload and begins uploading data with the first record in the unit.

Note that the software keeps track of multipleL2000DXunits by reading from each unit its unique, factory-supplied serial number.

To upload data from an L2000DX analyzer, connect the analyzer to the PC using the supplied cable then select **7) PC UPLOAD** on the L2000DX unit. Once the unit is connected and ready to upload choose **Upload** from the **Communicate** menu on the PC. Choosing it opens the **L2000DX Upload** box. Once this box is open click **OK**. The program will contact the L2000DX analyzer and begin uploading stored data.

If you want to cancel the process, click on the **X** in the upper right corner of the box, then click Abort Transfer in the resulting Communication Status message box.

Selecting Data

Choosing **Selection** at the menu bar causes the **Define Sample Selections** dialog box to appear. Here you can choose to display only some of the available data records by using combinations of various filters.

Note: These filters will affect the display, printing and export of data.

Selection Filter - This heading (left side of the dialog box) contains four selections: **Header, Customer, Job** and **Location**. Check the checkbox for the filter(s) you want to use. You cannot combine **Header** with any of the other three filters, however the other three may be used in any combination. When you select one of the filters, a drop-down menu appears displaying the values available in the active data set.

> **Header Range Filter** - This area lets you choose a range of consecutive Header numbers. The Starting and Ending must be different, and the Ending number must be greater than the Starting number.
>
> **Sample Range Filter** - This area lets you choose a range of consecutive Ref #s. The Starting and Ending may be the same, but the Ending number must be greater than the Starting number.

As you make various filter selections, the data in the L2000DX window will change to reflect your choices, even while the Define Sample Selections dialog box is open.

The L2000DX Data Manager combines filters so that the data displayed, printed or exported satisfies all the filters. For example, if you select a **Customer** and a **Job** filter, you will see only data records with the required Customer number and the required Job number, not data with either the Customer number or the Job number.

As soon as you select any filter, a **Clear All** button appears in the dialog box to allow you to quickly clear all filter selections. A **Clear All Filters** button will also appear on the L2000DX Data Manager window so you can clear filters later without returning to the **Define Sample Selections** dialog box.

Generating a Report

Choosing **Print Report** at the **File** menu causes the **Report Page Format** dialog box to appear. This box allows you to specify a title for your report.

In the edit field, type a title of up to 70 characters to be centered in the header of the report form.

Click the **Print Preview** button to see what the report will look like. You may choose to print the report from the preview screen.

Click the **Cancel** button to dismiss the **Report Page Format** box without previewing the report.

Exporting Data

To export data to a Microsoft Excel spread sheet, choose **Export** from the **File** menu. This will open the **Save As** dialog box to allow you to choose the location for saving the currently active data set in Microsoft Excel spreadsheet format.

Care and Maintenance

Your L2000DX is designed for ease of use and reliability and requires very little maintenance. By following the instructions outlined below, you should be able to obtain maximum life from the electrode and the instrument itself.

Changing Paper

1. Turn the L2000DX Analyzer off and remove the external power plug, if attached. Turn the analyzer over, lay flat on smooth surface and remove paper access door on bottom.

2. Remove the empty paper roll by grasping the roll in the middle with one hand. With the other hand, gently push one side of the paper bracket out away from the roll, while lifting the roll in the middle. This will free one end of the spindle. Continue lifting the roll out of the bracket until it is free.

3. Remove the paper spindle from the spent core and insert into the new roll of paper.

4. With the L2000DX Analyzer still upside down and the paper access on the right side, slide the analyzer to the edge of the table until it hangs over the edge far enough for the paper slot on the keypad to be accessible. DO NOT ALLOW THE UNIT TO HANG TOO FAR OVER AS IT MAY FALL.

5. Install the new paper roll into the holder with the loose end of the paper coming off the top of the roll. (Treated side must be on the top of the paper as it exits the roll.) Grasping the roll in the middle, slide the roll between the uprights of the paper holder until the ends of the spindle snap into the holes in the paper bracket. While pushing in the paper roll, it may be necessary to slide the roll of paper to one side to deflect the paper holder enough to clear the other side. Once in place, the roll should spin freely and remain on the holder.

6. The paper should now be installed in the paper holder with the free end on top of the roll. With a clean square end, fold one corner of the paper back flush with the opposite side to form a 45• point on the end. If there is not a clean square end on the paper, pull off a length of paper and tear a square edge off, along the bottom of the case, before folding the corner.

7. Place the paper flat on the circuit board with the pointed end of the paper extending over the edge of the paper slot. Position the point approximately 1 inch from the side of the slot and, while keeping the paper flat on the board, slide the paper forward so that the point goes under the front edge of the green circuit board and into the printer. Continue pushing the paper forward, while gently moving the paper from side to side, until the paper exits the front of the analyzer.

8. Gently pull the paper through from the front of the analyzer until a section of the full width of paper is exposed.

9. If the paper does not exit the front of the analyzer, remove the paper and retry from step 7 above.

10. Once the paper has been installed, replace the paper access door and turn the analyzer back over.

General Care

Do not allow the instrument to get wet. As with any electronic instrument, water is the quickest way to destroy the L2000DX's components. Store the instrument in its case when it is not in use and do not expose it to extremely humid environments.

Be careful not to spill any of the solutions on the instrument. They are all acidic and will quickly destroy the circuitry if they come into contact with it. If solutions are spilled onto the instrument, wipe it off quickly with a damp cloth. Do not store solutions in the same case with the instrument, as any leakage may cause serious damage. This is particularly important when the instrument is to be shipped by air.

When using the L2000DX where AC power is available, operate the instrument with the AC adapter. This will prolong the life of the battery and insure that the battery is always charged.

Always store the L2000DX with fully charged battery. (A completely dead battery could take approximately 6-8 hours to charge fully.)

If the L2000DX is to be stored for prolonged periods of time, it is important to periodically charge the battery. This will prolong the battery life and insure that the analyzer is always ready for use.

Protect the analyzer from static electric charges. The keypad and case are isolated from the internal circuitry and are not susceptible to static discharge. However, when connecting the electrode to the meter, under certain environmental conditions, the static discharge may reset the power management circuit. Before connecting the electrode, first touch the outer ring of the BNC connector with one hand while holding the metal connector on the electrode in the other. Then connect the electrode to the Analyzer.

The L2000DX analyzes for PCBs/Chlorinated Organics by finding the total amount of chlorine in a given sample. It is important, therefore, to keep all extraneous sources of chlorine away from the instrument and the various solutions. Take extra precaution when working near salt water or under very warm conditions when contamination by perspiration is possible. Never pour used CALIBRATION, RINSE, or EXTRACT solution back into a storage bottle as the entire bottle may become contaminated.

Electrode Care and Maintenance

The electrode is the most sensitive component of the L2000DX system. Care must be taken not to damage the sensing membrane on the tip of the electrode. If it does become damaged or contaminated, it may be possible to restore the electrode response by polishing. To polish the electrode: Remove one of the membrane polishing strips from the instrument case and place it flat on a solid surface, abrasive side up. Place one or two drops of RINSE solution or distilled water on the abrasive strip. With the electrode perpendicular to the abrasive strip, polish the electrode tip by gently moving it in a circular motion for about 30 seconds. Apply constant pressure, but do not push too hard on the electrode. When finished, soak the electrode for five minutes in rinse solution. Polishing strips can be reused several times. NOTE: DO NOT OVER POLISH. ELECTRODES SHOULD BE POLISHED ONLY WHEN NECESSARY.

When an electrode is not to be used for a period of more than one week or for an indefinite period, drain the filling solution from the electrode, flush the inside one or more times with distilled water, and store it dry with the protective black cap to protect the sensing membrane. Make sure to follow the procedures for restoring electrodes before using the electrode again (see **Restoring the Electrode After Extended Storage**).

Otherwise, the electrode filling solution should not be allowed to evaporate causing crystallization. For short periods of time between sample measurements including up to one week storage, maintain filling solution in the electrode and store the electrode in rinse solution. (NOTE: If a period of 12 hours [overnight] or longer elapses between measurements, drain a portion of the filling solution from the electrode, add additional filling solution to the filling hole, and start with fresh rinse solution.)

Trouble Shooting

The instrument does not turn on.

1. The battery is dead. Plug in the AC adapter and retry.

2. The power management circuit has been overloaded and is locked due to a severe static electric discharge during the connection of the electrode. Contact Dexsil Corporation for further technical assistance.

The instrument turns on but the time and date have been lost.

1. The power management circuit has been overloaded and has reset. This is most likely due to a static electric discharge during the connection of the electrode. Re-enter the time and date and proceed with the operation of the instrument. Follow the procedure outline under **Electrode Care** for connecting the electrode. Check electrode output in ***"DIAGNOSTICS"*** Mode.

2. The battery has been disconnected and reconnected, resetting the power management circuit. Proceed as above.

The instrument turns off when plugging in the electrode.

1. A large static electric discharge has overloaded the power management circuit. Turn Analyzer on in the normal manner. Power-up will be to the time and date screen. Follow the procedure outline under **Electrode Care** for connecting the electrode.

The instrument does not provide a millivolt reading, in "*DIAGNOSTICS*", after the electrode has been plugged in.

Check the electrode to verify that it contains the filling solution. If it is empty or low, refill the electrode as described in: **Restoring the Electrode After Extended Storage.**

1. Make sure that the bottom half inch (centimeter) of the electrode is completely immersed in the rinse solution.

2. Check the cable for loose connections.

The millivolt reading will not exceed 140 mV.

1. Replace the RINSE solution, and swirl the electrode for several seconds before letting the reading stabilize.

2. Replace the filling solution in the electrode as described in: **Restoring the Electrode After Extended Storage.**

3. Polish the end of the electrode. Remove one of the membrane polishing strips from the instrument case and place it flat on a solid surface, abrasive side up. Place one or two drops of RINSE solution or distilled water on the abrasive strip. With the electrode perpendicular to the abrasive strip, polish the electrode tip by moving it in a circular motion for about 30 seconds. Apply constant pressure, but do not push too hard on the electrode.

4. DO NOT OVER POLISH!! ELECTRODES SHOULD BE POLISHED ONLY WHEN NECESSARY.

The electrode will not calibrate.

1. During calibration the output from the electrode is checked. If it is outside the acceptable range, the electrode will not calibrate and the program will jump to "DIAGNOSTICS". In this mode check the output of the electrode. It should be between 50 mV and 75 mV. To obtain the proper millivolt output, the tip of the electrode must be immersed in calibration solution. If the electrode contains adequate filling solution, and is immersed in **fresh** calibration solution and allowed to equilibrate, the output should reach the correct level.

2. The electrode will not calibrate, even after it has equilibrated:

   a. Change the calibration solution and refill the electrode as described in the **Restoring the Electrode After Extended Storage.**

b. If this does not solve the problem, polish the electrode as outlined in **Care and Maintenance.**

c. If these procedures do not work, the electrode may need to be replaced. Contact Dexsil for return information.

Insufficient quantity of solvent recovered from soil extraction.

Some soils are extremely dry or may contain a large percentage of organic material which can absorb enough extraction solvent so that there is less than the required amount of solvent available to complete the test. When soils of this type are being tested, five grams of sample instead of ten may be used. The final reading is then doubled or the Method is modified so that the **Sample Size Correction** is changed to **twice** its normal value. For instance, if, after weighing in five grams of soil, the final reading on theL2000DX is 35 ppm, the actual result for that sample is 70 ppm. Make sure to use the full quantity of extraction solvent and follow the instructions as you would for any sample. NOTE: This technique causes a loss of precision and should not be used unless absolutely necessary.

Error Messages

CAL ERROR: This message is generated during calibration if the electrode output is not between 50 mV and 75 mV. If this message occurs:

1. Check solutions and change if not correct or not fresh.

2. Check electrode output and refill with fresh fill solution if necessary.

CHECK DRIFT: This message indicates that there is excessive drift in the electrode output either during a measurement or calibration. If this message occurs during the measurement of an unknown, the best estimate of the analytical result will be displayed below the warning. This number is for reference only, it may not be reliable. The sample must be re-analyzed to obtain an acceptable result. If this message occurs during a calibration, the electrode mV output will appear below the warning. If the warning appears, check the following:

1. Check the electrode performance as described under **Restoring the Electrode After Extended Storage**. Follow the steps for electrode draining and refilling, then recheck the electrode output. If this message occurs during calibration, the electrode is most likely damaged. See above under **The electrode will not calibrate.**

2. Check electrode leakage - The electrode is designed to leak a small amount of filling solution through the gap between the sensing pellet and the epoxy body. If the leak rate is too slow or too fast the performance of the electrode may be adversely affected. The electrode leak rate should be between 0.2 cm and 3 cm in 24 hours (as measured from the filling hole to the top of the fill solution).

3. Check for sample contamination. Some samples contain high levels of sulfur, heavy metals, waste oil, or other organics that may carry over to the final extract. If these compounds come into contact with the electrode, they can poison the sensing element. The output from the electrode will deteriorate with repeated exposure to these contaminants. If repeated samples cause a drift error, but the electrode checks out with the standard solutions, check for sample contamination.

CHECK ELECTRODE: This message indicates that the electrode output has exceeded 180 mV. If this message appears, the electrode has been damaged or the wrong electrode has been attached to the L2000DX analyzer. Check for the correct electrode then follow steps for restoring an electrode.

HIGH: This message indicates that an unknown reading is above 5000 ppm in analyte concentration. This message only appears during an unknown measurement. If this message occurs, re-analyze the sample using a smaller sample size.

LOW: This message indicates that an unknown reading has resulted in a negative analyte concentration. This can be caused by either an electrode malfunction or an improper blank value used, i.e., a large blank value not representative of the true blank. If this message occurs, check the blank value used or check the electrode function as described above. If the electrode checks out, investigate possible co-contaminants in the sample that may have adversely affected the electrode.

LOW BATTERY: If the battery voltage drops below the operational level of the instrument, the display will read **"LOW BATTERY"** followed by the message **"Power Off"** at which time the instrument will turn off automatically.

PRINTER ERROR: Should the printer become jammed during the operation of the instrument, the operator will receive the following message:

PRINTER ERROR
DISABLE (Y/N)

Choosing "N" will cause the instrument to recheck the printer. Message will read:

CHECKING PRINTER
AGAIN

Choosing "Y" will disable the printer until the instrument is turned off and then on, at which time the printer will be checked again.

Appendix A: Additional Information Available from Dexsil

DTR-10-01 "Alternative Methods of PCB Analysis", Stephen Finch, Dexsil Corporation; Generators Journal, Winter 1990.

DTR-10-02 "One Example Where Chromatography May Not Necessarily Be the Best Analytical Method", S.R. Finch, D.A. Lavigne-Dexsil Corporation, R.P.W. Scott, Ph.D.-Georgetown University; Journal of Chromatographic Science-July 1990.

DTR-11-01 "A Comparison of Current PCB Analytical Techniques", Stephen Finch-Dexsil Corporation; PCB Forum, 3rd International Conference for the Remediation of PCB Contamination, 1991.

DTR-11-02 "Case Study of a New Field Screening Tool for Delineating Soil PCB Contamination", Mark B. Williams, PE and John S. Flickinger-Dames & Moore (Madison, WI), Joseph E. Shefchek, CHMM-Wisconsin Power & Light (Madison, WI), E. Jonathan Jackson, CHMM-Haliburton NUS Environmental Corp. (Aiken, SC); Proceedings: 1991 EPRI PCB Seminar.

DTR-11-03 "PCB Determination, Simple/Low Cost or Complex/Expensive, Which Method is the Most Reliable in the Field?", S. Finch, pp. 45-1 to 45-4; Proceedings: 1991 EPRI PCB Seminar

DTR-12-01 "Application of a New PCB Field Analysis Technique for Site Assessment", Roger D. Griffin-Griffin Environmental; Proceedings of Hazmacon '92 March-1992.

DTR-12-02 "Available Options for the Analysis of PCBs", Stephen Finch; Environmental Science and Engineering p. 15., Feb.-March.

DTR-13-01 "Electrochemical Method for Surface Testing of PCB Contaminated Electrical Equipment", Stephen Finch; 7th Annual Industry and PCB Forum, June 1993, Canadian Electricity Forum.

DTR-13-02 "A Comparison of Popular Field Screening Methods for PCB Contamination in Soil", Alvia Gaskill-Environmental Reference Materials, 1993 EPRI PCB Seminar.

DTR-14-02 "Comparison of the Response of PCB Test Methods to Different PCB Aroclors", Stephen Finch-Dexsil Corporation; Proceedings of "The Tenth Annual Waste Testing and Quality Assurance Symposium", July 11-15, 1994 Arlington, VA.

DTR-14-03 "Effect of Transformer Oil, Petroleum Hydrocarbons and Inorganic Salt as Interferences in Field Screening for PCB Contamination of Soil", Alvia Gaskill; Proceedings of "The Tenth Annual Waste Testing and Quality Assurance Symposium", July 11-15, 1994 Arlington, VA.

DTR-17-01 "Determination of Chlorinated Hydrocarbon Concentrations in Soil Using a Total Organic Halogen Method", T.B. Lynn, J.C. Kneece, B.J. Meyer, A.C. Lynn; Presented at the 13th Annual Waste Testing & Quality Assurance Symposium, July 6-9, 1997, Arlington, VA.

DTR-17-02 "Improved Extraction Efficiency of Polychlorinated Biphenyls From Contaminated Soil Using a Total Halogen Screening Method", W.S. Schutt-Young, Ph.D., A.C. Lynn, T.B. Lynn, Ph.D., B.J. Meyer, M.J. Krumenacher; Presented at "EnvirACS '97" held at the 13th Annual Waste Testing & Quality Assurance Symposium, July 7-9, 1997, Arlington, VA.

DTR-18-03 "Electrochemical Technique/Ion Specific Electrode Dexsil Corporation L2000 PCB/Chloride Analyzer", A.B. Dindal, S. Billetts, Environmental Technology Verification Report, US-EPA, Office of Research and Development, Washington, D.C., EPA/600/R-98/109, August1998

DTR-20-01 PCB Detection Technology Dexsil Corporation L2000DX Analyzer, A.B. Dindal, C.K. Bayne, E.N. Koglin, Draft Environmental Technology Verification Report, US-EPA Office of Research and Development, Washington, D.C. Report, December 2000

DTR-21-01 "Analysis of Water for PPB Range Chlorinated Organics Using a Total Organic Chlorine Analyzer," Theodore B. Lynn, Ph.D., Mary Kate Boggiano, Larry M. Sacramone, David L. Balog, Andrew C. Lynn, Dexsil Corporation, Presented at the Waste Testing and Quality Assurance Symposium 2001, August 13-16, 2001, Arlington, VA

DTR-21-02 "Low Level Detection of PCE in Monitoring Well Samples Using a Total Organic Chlorine Based Field Method," Theodore B. Lynn, Ph.D., Dexsil Corporation, Keith A. Wright, Camino, California, Presented at the Waste Testing and Quality Assurance Symposium 2001, August 13-16, 2001, Arlington, VA

DTP-09-01 "Accurate On-Site Analysis of PCBs in Soil, A Low Cost Approach", Deborah Lavigne-Dexsil Corporation.

DTP-09-02 "Field Test Kit for Quantifying Organic Halogens in Water and Soil", Deborah Lavigne-Dexsil Corporation.

DTP-11-01 "PCB Analysis by Gas Chromatography-What do the Numbers Mean? 1991", Stephen Finch-Dexsil Corporation.

DMR-16-01 EPA Method 9078 "Screening Test Method for Polychlorinated Biphenyls in Soil", 3rd edition SW 846- Test Methods for Evaluating Solid Waste, Physical/Chemical Methods, June 1997; Federal Register Vol. 62, No. 114, 6/13/97, Rules & Regulations.

Appendix B: L2000DX System Methods Table

Compound	Blank Subtract	%Chlorine	Size Multiplier	Extraction Multiplier	Matrix	Units	Analyte Label	Method Name
Aroclor 1242	yes	42	1.13	1.11	Oil	ppm	AROCLOR 1242	1242 OIL
Aroclor 1242	yes	42	1	1.33	Soil	ppm	AROCLOR 1242	1242 SOIL
Aroclor 1242	yes	42	1	1.1	Soil	ppm	AROCLOR 1242	2 STEP 1242
Aroclor 1242	yes	42	1	1	Wipe	• g/100scm	AROCLOR 1242	1242 WIPE
Aroclor 1242	yes	42	1	1.25	Water	ppm	AROCLOR 1242	1242 WATER HIGH
Aroclor 1254	yes	54	1.13	1.11	Oil	ppm	AROCLOR 1254	1254 OIL
Aroclor 1254	yes	54	1	1.33	Soil	ppm	AROCLOR 1254	1254 SOIL
Aroclor 1254	yes	54	1	1.1	Soil	ppm	AROCLOR 1254	2 STEP 1254
Aroclor 1254	yes	54	1	1	Wipe	• g/100scm	AROCLOR 1254	1254 WIPE
Aroclor 1254	yes	54	1	1.25	Water	ppm	AROCLOR 1254	1254 WATER HIGH
Aroclor 1260	yes	60	1.13	1.11	Oil	ppm	AROCLOR 1260	1260 OIL
Aroclor 1260	yes	60	1	1.33	Soil	ppm	AROCLOR 1260	1260 SOIL
Aroclor 1260	yes	60	1	1.1	Soil	ppm	AROCLOR 1260	2 STEP 1260
Aroclor 1260	yes	60	1	1	Wipe	• g/100scm	AROCLOR 1260	1260 WIPE
Aroclor 1260	yes	60	1	1.25	Water	ppm	AROCLOR 1260	1260 WATER HIGH
Askarel A	yes	99	1.13	1.11	Oil	ppm	ASKAREL A	ASKAREL A OIL
Askarel A	yes	99	1	1.33	Soil	ppm	ASKAREL A	ASKAREL A SOIL
Askarel A	yes	99	1	1.1	Soil	ppm	ASKAREL A	2 STEP ASKAREL A
Askarel A	yes	99	1	1	Wipe	• g/100scm	ASKAREL A	ASKAREL A WIPE
Askarel A	yes	99	1	1.25	Water	ppm	ASKAREL A	ASK A WATER HIGH

Compound	Blank Subtract	%Chlorine	Size Multiplier	Extraction Multiplier	Matrix	Units	Analyte Label	Method Name
DDT	yes	50	1	1.91	Soil	ppm	DDT	DDT SOIL
Toxaphene	yes	68	1	1.54	Soil	ppm	TOXAPHENE	TOXAPHENE SOIL
Chlordane	yes	69	1	1.42	Soil	ppm	CHLORDANE	CHLORDANE SOIL
PCP*	yes	67	1	2.54	Soil	ppm	PCP	PCP SOIL
Trichloro ethylene	yes	81	1	1.00	Soil	ppm	TRICHLOR	TRICHLOR SOIL
Trichloro ethylene	yes	81	10	1.86	Water	ppb	TRICHLOR	TRICHLOR WATER
1,1,1 Tri-chloro ethane	yes	80	10	2.03	Water	ppb	111 TRICHLETHANE	111 TRICHL WATER
Tetrachloro ethylene	yes	86	1	1.00	Soil	ppm	TETRACHLOR	TETRACHLOR SOIL
Tetrachloro ethylene	yes	86	10	1.89	Water	ppb	TETRACHLOR	TETRACHLOR WATER
Methylene Chloride	yes	83	10	13.0	Water	ppb	METHCHLORIDE	METHCHLOR WATER
Vinyl Chloride	yes	57	10	5.36	Water	ppb	VINYLCHLORIDE	VINYLCHLOR WATER
Dichloro ethylene	yes	73	10	3.46	Water	ppb	DICHLORETHYLENE	DICHLOR WATER
Chloride	yes	100	1	1	None	ppm	CHLORIDE	CHLORIDE

* Requires two-step solvent system with filter omitted.

Appendix C: Technical Data

Physical

Size:	w = 9" (230mm) d = 9.5" (240mm) h = 4.25" (110mm)
Weight:	5 lbs. 12 oz. (2.6 kg)
Shipping Weight:	17 lbs. (7.75 kg)
Case:	Painted Aluminum
Keypad:	16 Position UV-Resistant Polyester Membrane Keypad

Electrical

Battery Power:	Internal 8V Gel Cell (3 Days of Operation on Full Charge)
Line Power:	12 W, 115V or 220V Wall Transformer
Charging:	Internal IC Controlled Charging Circuit
Power Management:	Automatic Shut-Off After 15 Minutes of Non-Use With Low-Power Warning and Shut-Off

Digital

Processor:	AM188EM
A/D Converter:	24 Bit Auto-Ranging
Memory:	
Method Storage:	28 Pre-programed Methods + Up to 22 User Defined Methods
Data Storage:	1800 pts

Input

Range:	± 300 mV
Electrode:	BNC Connector (Back Panel)Electrode Type:ORION 96-17B Combination Chloride Electrode

Output

Display:	Backlit, 2 x 16 LCD, 0.32" Character Height
Printer:	40 Character Onboard Thermal Printer (Paper Re-Order PN: LP-THP-01)
External Printers:	Canon BJC-4300, BJC 250, and BJ-200ex; Epson ActionLaser 1400, and Stylus 740, HP DeskJet 870Cse, and LaserJet 4000T
Parallel Printer Port:	25-pin Female Connector (bidirectional)
RS-232:	Data Upload to PC (L2000DX Data Manager required)

Operating Environment

Temperature:	55 °F - 100 °F (13 °C - 38 °C)
Humidity:	85% (non-condensing)
Sunlight:	Do Not Operate With Electrode Exposed to Direct or Indirect Sunlight

Appendix D: Program Flow Chart

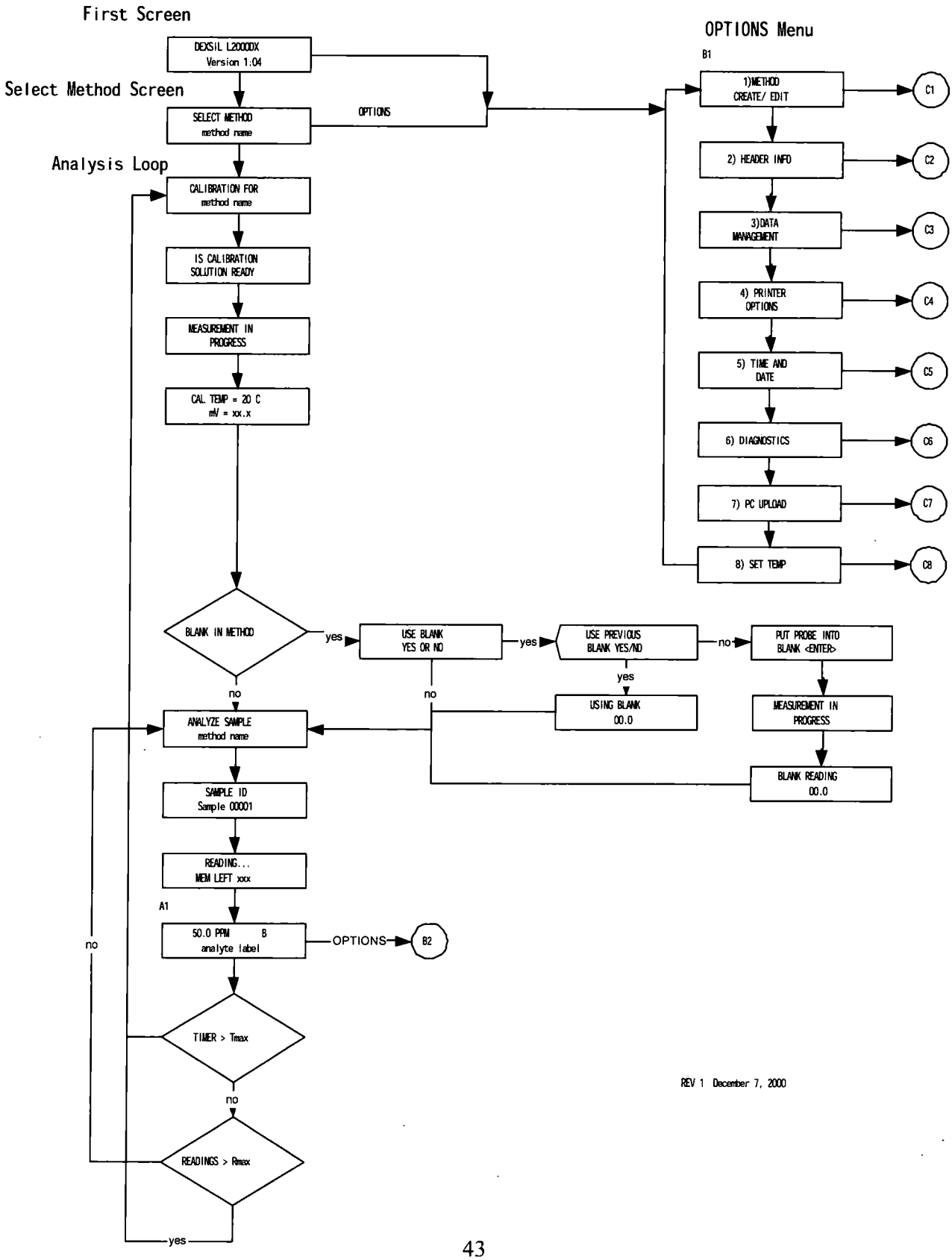

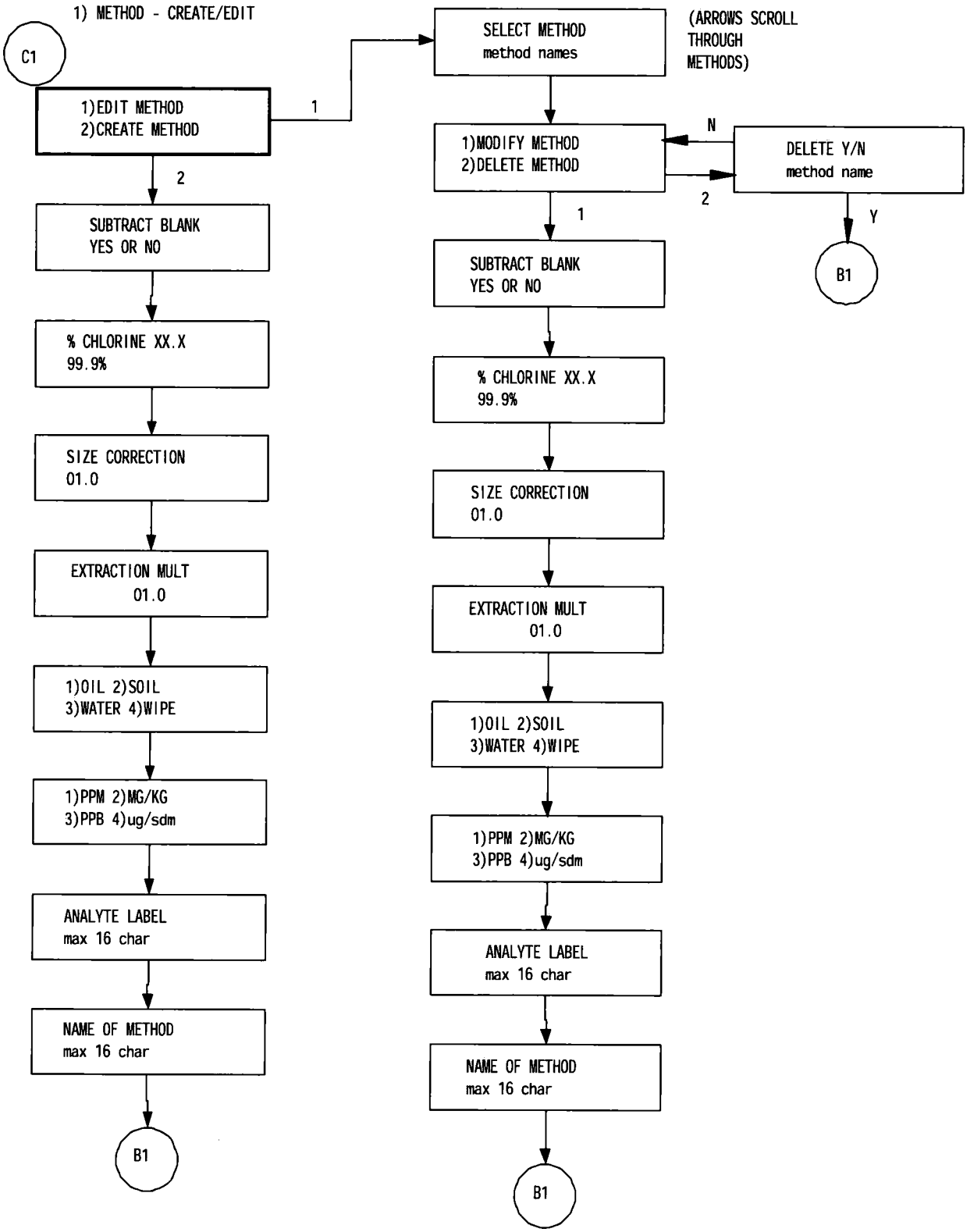

Rev 2 December 7, 2000

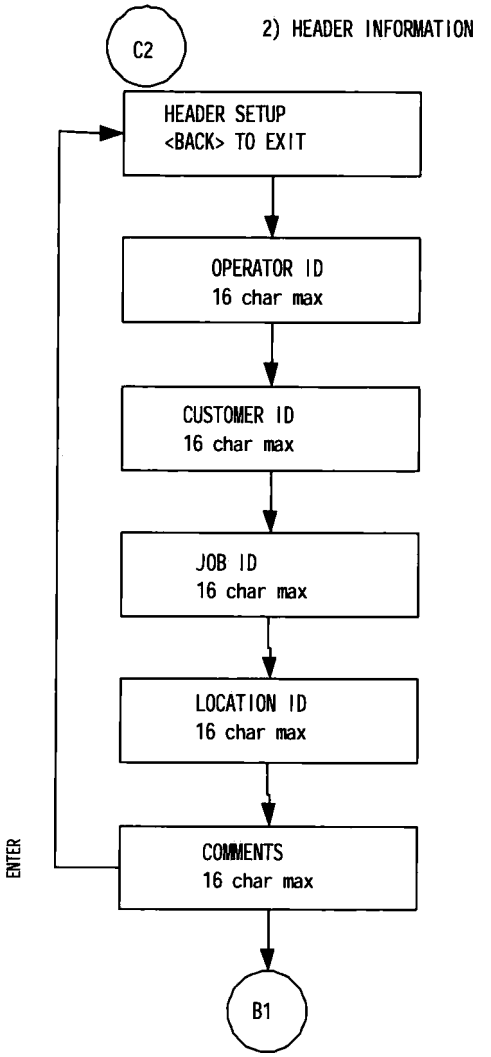
2) HEADER INFORMATION
C2
HEADER SETUP
<BACK> TO EXIT
OPERATOR ID
16 char max
CUSTOMER ID
16 char max
JOB ID
16 char max
LOCATION ID
16 char max
COMMENTS
16 char max
ENTER
B1

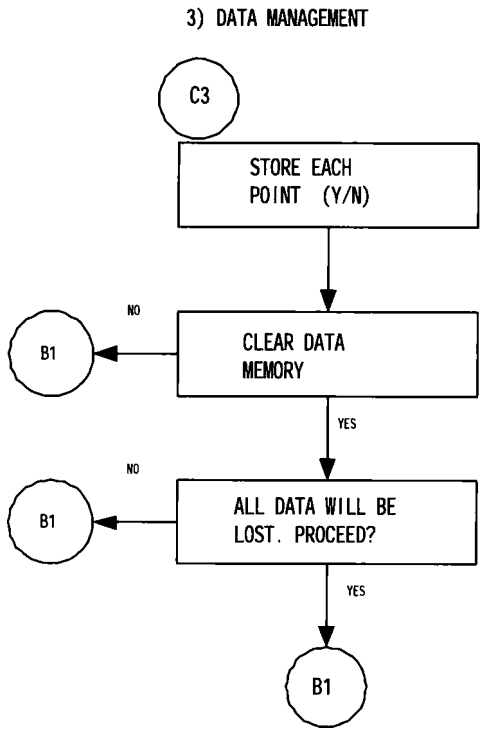
3) DATA MANAGEMENT
C3
STORE EACH
POINT (Y/N)
NO
B1
CLEAR DATA
MEMORY
YES
NO
B1
ALL DATA WILL BE
LOST. PROCEED?
YES
B1

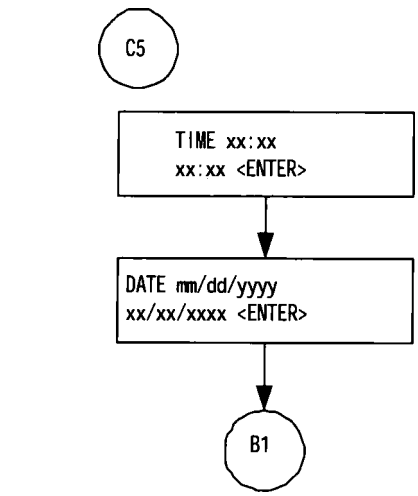
5) DATE AND TIME
C5
TIME xx:xx
xx:xx <ENTER>
DATE mm/dd/yyyy
xx/xx/xxxx <ENTER>
B1

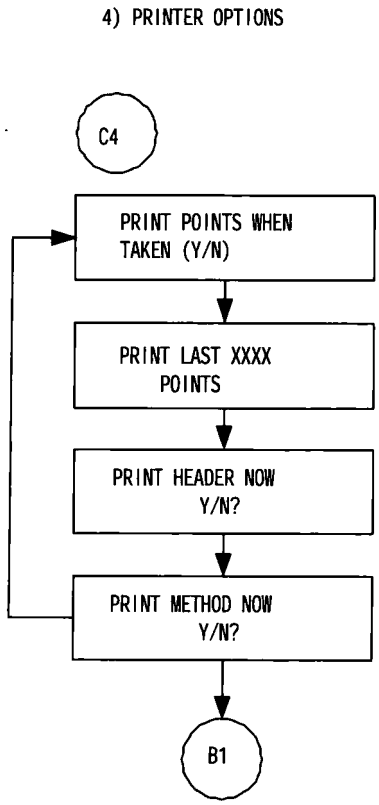
4) PRINTER OPTIONS
C4
PRINT POINTS WHEN
TAKEN (Y/N)
PRINT LAST XXXX
POINTS
PRINT HEADER NOW
Y/N?
PRINT METHOD NOW
Y/N?
B1

6) DIAGNOSTICS

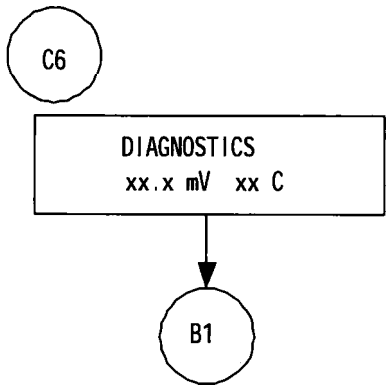

7) PC UPLOAD

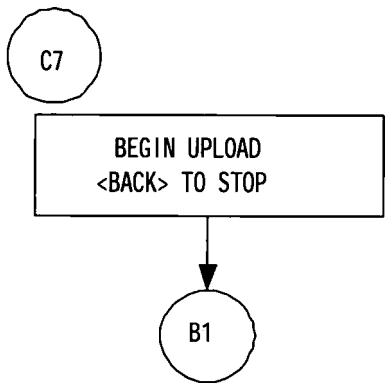

8) SET TEMP

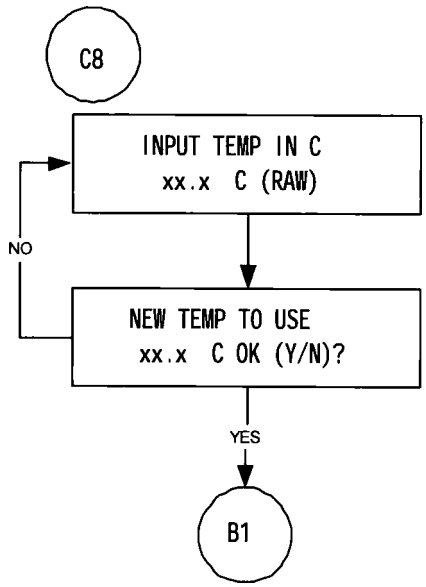

REV 0, December 7, 2000

METHOD INFORMATION

B2

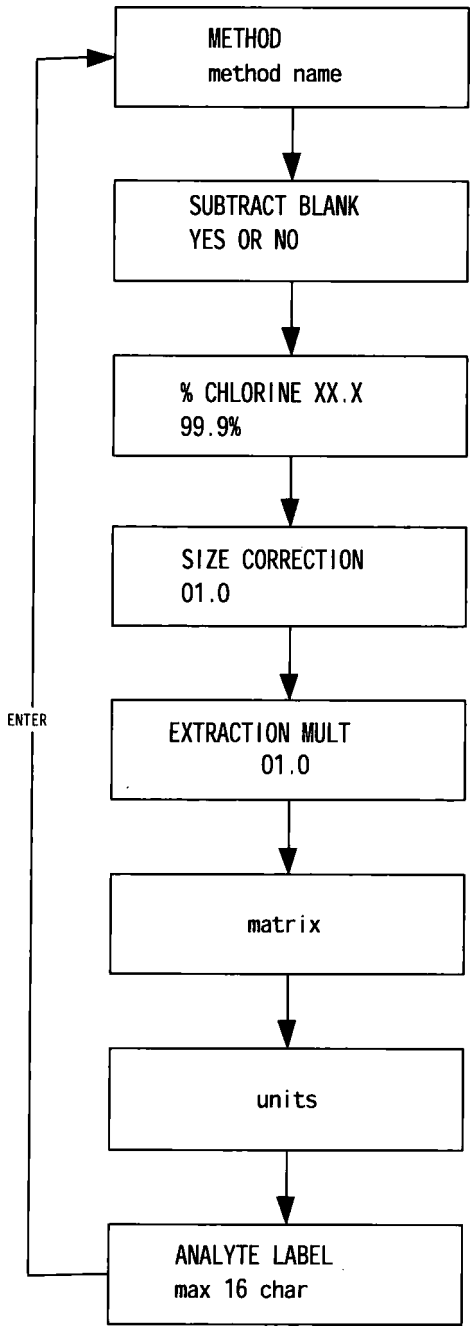

ENTER SCROLLS THROUGH METHOD. BACK RETURNS TO A2.

REV 1 December 7, 2000

DEXSIL CORPORATION
L2000DX ANALYZER
ONE YEAR LIMITED WARRANTY

DEXSIL CORPORATION warrants the L2000DX Analyzer against defects in material or workmanship for a period of one year from the date of purchase. During the warranty period, any product which is determined by DEXSIL to be defective in material or workmanship and returned to DEXSIL as specified below, will be, as the exclusive remedy, repaired or replaced at DEXSIL's option.

The cost of repair or replacement is included, shipping costs are not and are to be paid by the customer.

In the event that an L2000DX Analyzer is suspected to be defective contact a DEXSIL representative at the address below to obtain a return authorization:

DEXSIL CORPORATION
ONE HAMDEN PARK DRIVE
HAMDEN, CT 06517
TEL:(203) 288-3509
FAX:(203) 248-6523

Upon return of the unit it will be inspected and a determination will be made as to whether the product is defective. If defective, arrangements will be made for repair or replacement without charge.

THE WARRANTY SET FORTH ABOVE IS EXCLUSIVE AND NO OTHER WARRANTY, WHETHER WRITTEN OR ORAL, IS EXPRESSED OR IMPLIED. DEXSIL SPECIFICALLY DISCLAIMS THE IMPLIED WARRANTIES OF MERCHANTABILITY AND FITNESS FOR A PARTICULAR PURPOSE.

DEXSIL CORPORATION IS NOT LIABLE FOR INDIRECT OF CONSEQUENTIAL DAMAGES IN CONNECTION WITH THE USE OF THE PRODUCT.

Some states do not allow the exclusion or limitation of incidental or consequential damages, so the above limitation or exclusion may not apply to you.

This Warranty applies only to parts or components which are defective and does not cover repairs necessary due to normal wear, misuse, or accidents.

All warranty repairs reimbursable under this warranty must be performed by DEXSIL CORPORATION or its representative using approved replacement parts.

Repairs or attempted repairs by anyone other than a DEXSIL representative are not reimbursable under this warranty. In addition, these unauthorized repair attempts may result in additional malfunctions, the correction of which is not covered by warranty.

This warranty gives you specific legal rights, and you may also have other rights which vary from state to state.